WSRC-TR-2001-00432

Functions and Requirements for the Transfer Piping Photographic System

D. E. Snyder
Westinghouse Savannah River Company
Aiken, South Carolina 29808

This document was prepared in conjunction with work accomplished under Contract No. DE-AC09-96SR18500 with the U.S. Department of Energy.

DISCLAIMER

This report was prepared as an account of work sponsored by an agency of the United States Government. Neither the United States Government nor any agency thereof, nor any of their employees, makes any warranty, express or implied, or assumes any legal liability or responsibility for the accuracy, completeness, or usefulness of any information, apparatus, product or process disclosed, or represents that its use would not infringe privately owned rights. Reference herein to any specific commercial product, process or service by trade name, trademark, manufacturer, or otherwise does not necessarily constitute or imply its endorsement, recommendation, or favoring by the United States Government or any agency thereof. The views and opinions of authors expressed herein do not necessarily state or reflect those of the United States Government or any agency thereof.

This report has been reproduced directly from the best available copy.

Available for sale to the public, in paper, from: U.S. Department of Commerce, National Technical Information Service, 5285 Port Royal Road, Springfield, VA 22161, phone: (800) 553-6847, fax: (703) 605-6900, email: orders@ntis.fedworld.gov online ordering: http://www.ntis.gov/support/index.html

Available electronically at http://www.osti.gov/bridge/

Available for a processing fee to U.S. Department of Energy and its contractors, in paper, from: U.S. Department of Energy, Office of Scientific and Technical Information, P.O. Box 62, Oak Ridge, TN 37831-0062, phone: (865) 576-8401, fax: (865) 576-5728, email: reports@adonis.osti.gov

Abstract

This document describes the functions and performance requirements for a transfer piping photographic system to perform remote inspection of tank transfer piping.

Acronym List

A	Amperes
ALARA	As Low As Reasonably Achievable
HLW	High Level Waste
NFPA	National Fire Protection Association
R/hr	Roentgen/hour
SRS	Savannah River Site
TFA	Tank Focus Area
TPPS	Transfer Piping Photographic System
VAC	Volts (Alternating Current)
WSRC	Westinghouse Savannah River Company

1.0 Introduction

1.1 Background

SRS has tanks and transfer systems that have exceeded their original design life, but will be used for waste processing for another 30-40 years. Caustic sludge and caustic waste are transferred in the piping system. The structural integrity of the transfer lines is assessed by conducting leak tests on a periodic basis. Some of the transfer piping is configured in such a way that leak testing is not possible. The structural integrity of these lines is determined by review of as-built drawings, knowledge of past environmental conditions, and knowledge of expected future environmental conditions.

The transfer piping system was constructed of 2" and 3" schedule 40 and schedule 10 304L stainless steel. Most of the piping is jacketed by carbon steel piping ranging in size from 4" to 10". The existing transfer piping will be used until all the HLW is removed from the storage tanks. The inspection task is complicated by the size of the access piping (1 inch diameter) to the transfer lines. Because of the age of some of the transfer lines, it is desirable that visual inspection be used to provide an indication of pipe conditions.

1.2 Description

This document defines the functions and requirements for a transfer piping photographic system.

1.3 Purpose

The purpose of this document is to provide the basis for the development, procurement, testing, and deployment of a transfer piping photographic system. This document describes the operating environment and system functional requirements. Funding for the next fiscal year is not available to continue work on the TPPS.

1.4 Scope

This document provides the functions and requirements necessary to form the basis for the design of the transfer piping photographic system. This system will be used to inspect and photograph intra-area and inter-area transfer piping in F and H areas.

1.5 Definition of Terms

Function. A function is a description of the task that a system, subsystem or component must perform. It is not a description of the device in any manner, but may establish some of the parameters governing the overall geometry of the device.

Requirement. A requirement is a mandatory factor that must be applied or incorporated into the design of the device performing the specified function. It is not a preference and uses the word shall.

Assumption. An assumption is the basis for a requirement that is taken to be true without necessarily having proof or demonstration. Changes in assumptions may have significant impacts on related requirements.

Shall/Must. The words "shall" or "must" denote a directive or requirement.

2.0 General Assumptions, Functions, & Requirements

2.1 Assumptions

2.1.1 General

The TPPS operation will be remotely controlled via tether from outside the transfer piping system. The transfer piping is accessible through several 1" cleanout ports as shown in Figures 1 through 3.

2.1.2 Deployment Strategy

The TPPS will be deployed through the routes stated above. The TPPS must be capable of traveling up to 30’ through 1" cleanout ports, and up to 100’ through the 2" and 3" transfer piping. In general, the transfer piping is buried under backfill of

depths up to 28 feet. The slope of the transfer lines range from < 1degree to 26 degrees.

The TPPS must be deployed through the different cleanout ports as shown in Figures 1 through 3. TPPS ingress/egress may require custom tools. Custom tooling may also be required to assist in manipulating and positioning the inspection system in the piping.

2.1.3 Ancillary Equipment

The inspection device will have integral vision, position feedback, photographic capability, and defect measurement capability. TPPS controls will be located outside and near the pipe entry point. Deployment tools may be required to assist in TPPS insertion and removal.

2.1.3.1 Control Center

All control equipment will be portable to allow for quick setup and movement between sections of transfer piping. Equipment may be operated outdoors but will be protected from inclement weather via temporary shelter. All controls will be in a single control console. This console will control the inspection unit, camera operations, defect measurement instruments, and all other components.

2.1.3.2 Power

Electrical power (110 VAC, 20 A single phase circuits) shall be available for the TPPS.

2.1.4 Interfaces

The system controls will interface with all the components and subsystems.

2.1.4.1 Transfer Pipe Access

Deployment of the TPPS will be through available 1" cleanout ports.

2.2 Functions

2.2.1 System Summary Function

The TPPS function is to provide visual inspection, photographic capability, and defect measurements of the interior surfaces.

2.2.2 System Functions

2.2.2.1 Transport Unit

The transport unit function is to transport photographic and defect measurement equipment through the transfer piping. Controls for the transport unit manipulation shall include forward/reverse operation, if applicable. The transport unit shall access the transfer piping through 1" cleanout ports and shall be able to traverse multiple 90 degree turns and a 5" radius or larger bend in the piping. The transport unit shall be capable of traveling up to 30 feet through the 1" cleanout ports and up to 100’ through 2" and 3" transfer piping with the camera, lights, tether, and defect measurement device.

2.2.2.2 Inspection Unit

The inspection unit function will provide visual images of the interior of the transfer piping. The unit shall be equipped to measure piping defects, provide real time video, and provide still pictures for analysis. The camera and lights shall be capable of providing photographic quality of defects on the interior walls of the piping. Appropriate lighting and camera shall be included to facilitate navigation and provide for visual inspection of the transfer piping walls at 90 degrees from the centerline of the pipe. The camera shall be self-leveling in order to provide an upright picture as it travels through the piping.

2.3 Requirements

2.3.1 Modular Design

All components shall incorporate modular design to facilitate replacement or servicing as needed. All cables shall be easily disconnected at both ends.

2.3.2 Interchangeability, Standard Components

Equipment interchangeability shall be maximized to the extent practical. Standard commercially available parts, components and materials shall be used to the extent practical consistent with other functional requirements.

2.3.3 Maintainability

System components having a higher probability of failure (specifically the transducers, drive motors, lights, cameras) shall be mounted so they can be easily removed for servicing. The TPPS shall be water tight and constructed of materials that allow decontamination.

2.3.4 Availability

Equipment chosen for this project shall be commercial, off-the-shelf as much as practical.

2.3.5 Efficiency

Equipment shall be operated at rated voltage and as near peak efficiency as practical.

2.3.6 Suitability

System components shall be selected on the basis of "fit for purpose" and shall be assessed for reliability, availability, maintainability, diagnostic capability, schedule risk, versatility, and for life cycle cost.

2.3.7 Safety

Protection of the public, the system operators, the environment and the equipment supersede all other functions and requirements. A listing of applicable regulations and governing documents is provided in Section 5.0. The vehicle shall adhere to ALARA principles by limiting worker and environmental exposure to radiological materials, reducing the volume of secondary wastes, minimizing external contamination, and incorporating design features to ease maintenance of contaminated components. The safety classification for the transfer piping photographic system is General Services (GS).

2.3.8 Quality

All equipment shall be fabricated in accordance with SRS quality assurance requirements.

2.3.9 Re-Deployable

The TPPS shall be designed for reuse. The system must be re-deployable through the various cleanout port configurations shown in Figures 1 through 3.

2.3.10 Failure of Equipment

The TPPS design shall not incorporate components whose failure could cause damage to the piping or prevent removal of the system from the piping.

2.3.11 Environmental Conditions

The TPPS must be designed to survive the following environmental conditions:

2.3.11.1 Transfer Piping

2.3.11.1.1 Temperature and Humidity

The air temperature in the transfer piping ranges from 50 to 70 degrees Fahrenheit. The radioactive sludge in the piping will not contribute significantly to the heat load. The humidity in the transfer piping ranges from 5 to 95 percent relative humidity.

2.3.11.1.2 Radiation

The radiation field in the transfer piping ranges from 0 to 1 Rad/hr.

2.3.11.1.3 Chemistry

Waste transferred through the lines typically consists of nitrates, nitrites, and hydroxide salts with potential metal oxide sludge. The pH of the waste is generally >12.

2.3.11.1.4 Addition of Water

The only fluid, other than liquid waste, allowed within transfer piping is water. If the TPPS requires water for operation, it shall be minimized. Corrosion evaluation shall be performed to assess whether inhibited water is required.

2.3.11.2 Outside Conditions

All equipment that is outside of the transfer piping shall be capable of operating in temperature extremes from 10 degrees Fahrenheit to 120 degrees Fahrenheit and 5-95% relative humidity.

2.3.12 Retrievable

All equipment deployed into the transfer piping must be retrievable under any circumstances for maintenance or repair purposes.

2.3.13 Storage

The TPPS shall be designed to allow for storage in climate-controlled conditions of approximately 65 - 90 degrees F and a relative humidity of approximately 30 – 60%.

3.0 Specific Requirements for the TPPS

3.1 Description

The TPPS will be used to transport photographic equipment, lights, defect measurement devices, and a tether. The TPPS will be inserted and removed through various 1" cleanout ports as shown in Figures 1 through 3 and deployed to the transfer piping.

3.2 Transport Unit Manipulation

The transport unit shall be capable of forward and reverse travel. The transport unit shall be maneuverable through 1", 2", and 3" diameter piping with a 5-in. minimum turn radius. All transport unit manipulation will be done manually or via a controller that operates independently of the camera and lights. The unit shall be capable of transporting the components necessary to inspect, measure defects, and provide pictures of the interior of the transfer piping.

3.3 Transport Unit Tether

The tethered cable from the transport unit to the control console shall be of a length to ensure that the vehicle can travel up to 30 through the 1" cleanout ports and up to 100’ through the 2" and 3" transfer piping. Total tether length will be no more than 200 ft. The tether shall be a bundled cable with controls, power, and feedback electrical cables, pneumatic tubing (if needed), and a safety steel retrieval cable. The design shall include a cable management system.

3.4 Transport Unit Obstacle Navigation

The transfer piping is flushed after transfers and obstacles in the piping are not expected.

3.5 Inspection Vision System

The vehicle shall have a color s-video camera with low light sensitivity (25 lux) and an 8x – 10x zoom lens. The inspection

system shall be capable of viewing straight down the pipe and viewing 90 degrees from travel path in order to inspect interior piping surfaces. The camera shall be mounted at one end of the vehicle to assist in navigation and inspection.

3.6 Defect Measurement System

The inspection unit shall have a pipe wall defect measurement system. This system shall provide the capability to measure wall voids, cracks, and pits of 0.059" or larger.

4.0 Cold Testing and Demonstration

4.1 Testing to be Performed

Testing of the TPPS shall be performed to demonstrate proper operation and performance as stated in Section 3.0. Inspection unit, camera, and control system unit functionality will be tested.

4.1.1 Test Plan and Procedures

A test plan shall be written for TPPS testing. The test plan shall identify all necessary equipment and procedures for completing the test.

4.2 System Test

The TPPS will be tested in a piping mockup at SRS. This will provide cold testing for inspection unit entry, pipe navigation and viewing, defect measurement, photographic quality, and inspection unit removal.

4.3 Test Success Criteria

The ability to remotely navigate, handle entry and removal in a safe and consistent manner, measure defect sizes, display video, and provide still pictures will be used as a success metric.

4.4 Test Report

A test report shall be generated documenting the test configuration and test results.

5.0 References

5.1 Governing Site Safety Documents

WSRC 8Q Employee Safety Manual
WSRC 18Q Safe Electrical Practices & Procedures

5.2 Applicable Codes and Standards

5.2.1 Electrical

NFPA 780-1997 Lightning Protection Guide
ICS 1, Industrial Controls and Systems
ICS 6, Enclosures for Industrial Controls and Systems

5.2.2 Fire Protection

NFPA 70-93, National Electric Code, National Fire Protection Association, Batterymarch Park, Massachusetts, 1993
NFPA 101-91, Life Safety Code, National Fire Protection Association, Batterymarch Park, Massachusetts, 1991

5.2.3 Design

WSRC E7, Conduct of Engineering and Technical Support
WSRC-IM-95-58, SRS Engineering Practices Manual

ANSI Y14.5M, Dimensioning and Tolerancing
AWS A2.4, Weld Symbols

5.2.4 Machining

ANSI B46.1, Surface Finishes
ANSI B1.1, Screw Threads

5.2.5 Inspection

SNT-TC-1A 1996, American Society for Nondestructive Testing, Columbus, Ohio

5.3 General References

None.

6.0 Figures

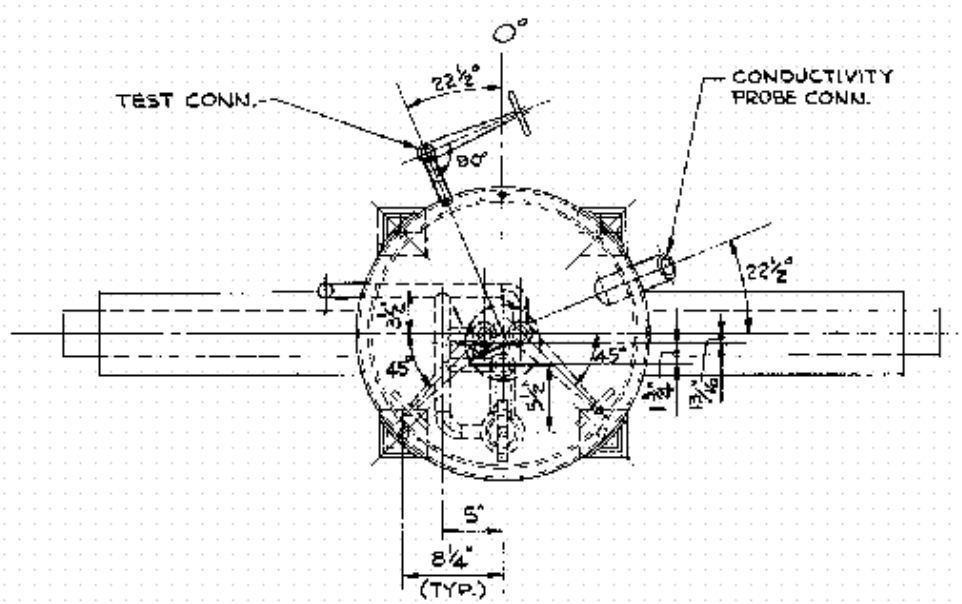

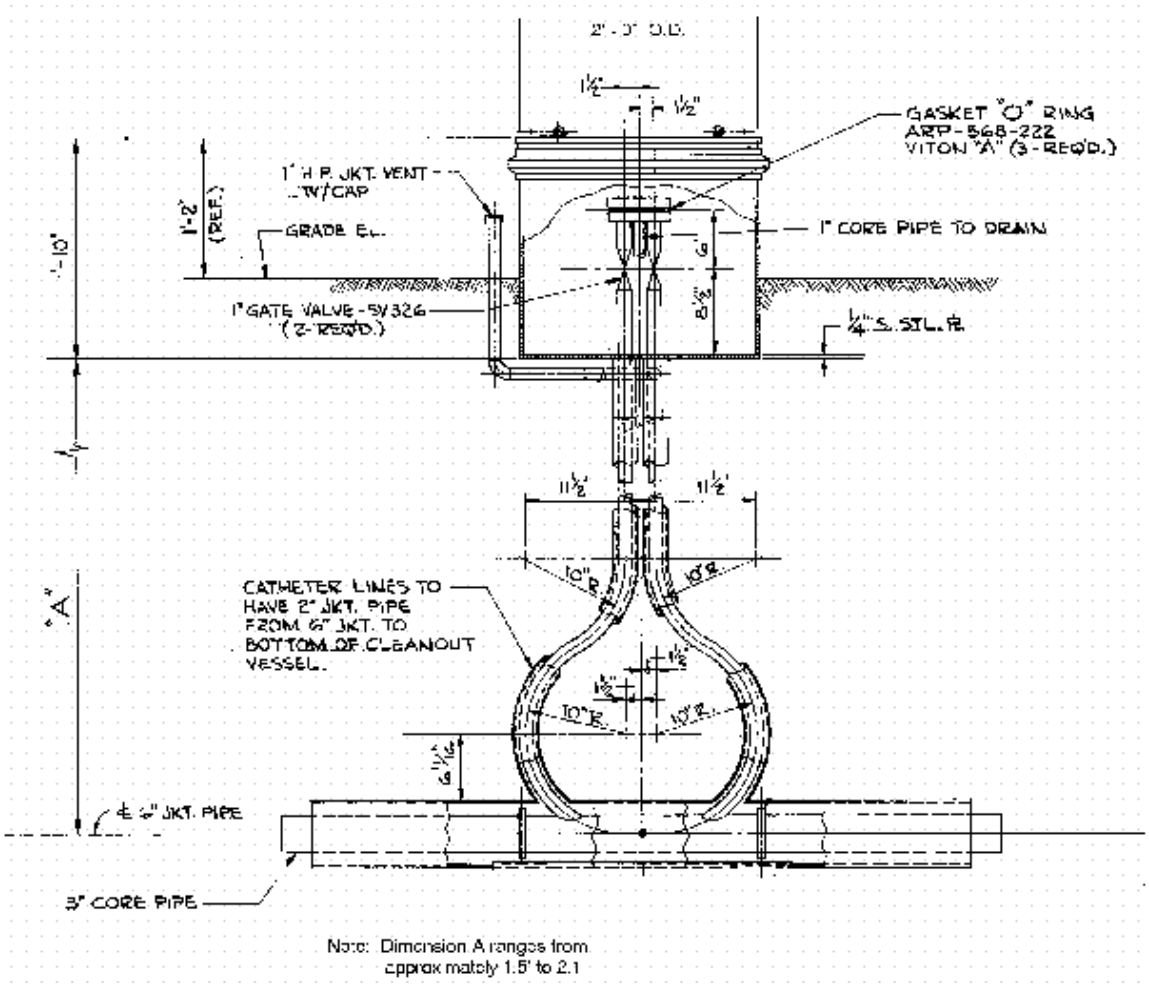

Figure 1: Typical Cleanout Piping Configuration

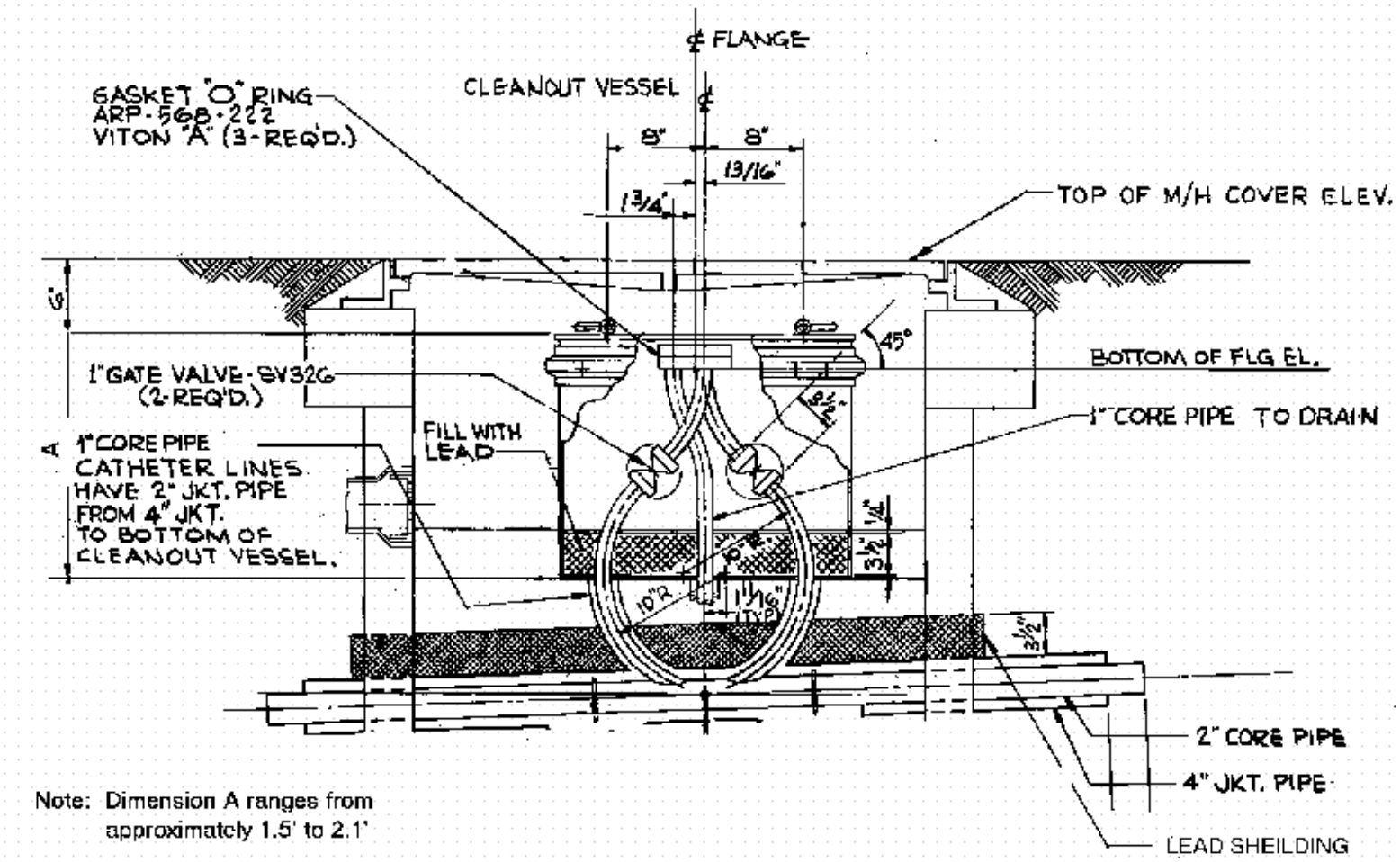

Figure 2: Typical Cleanout Piping Configuration

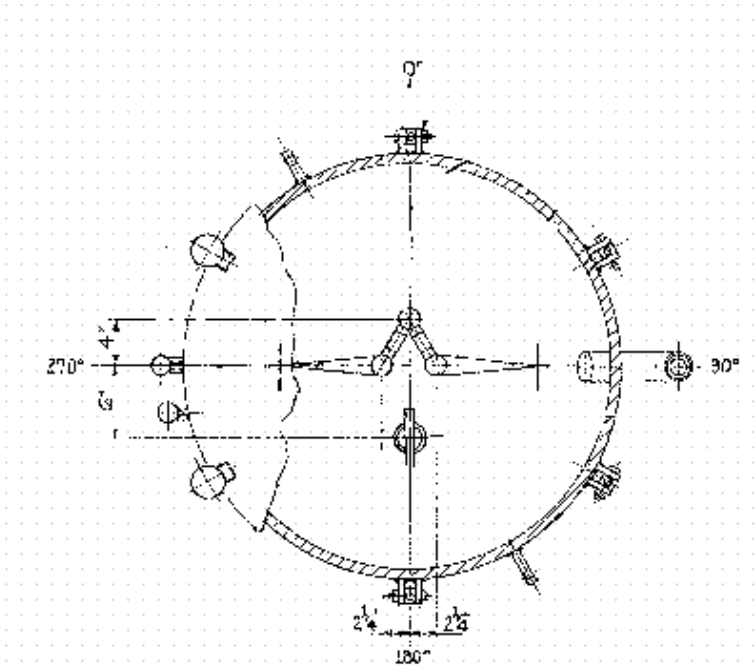

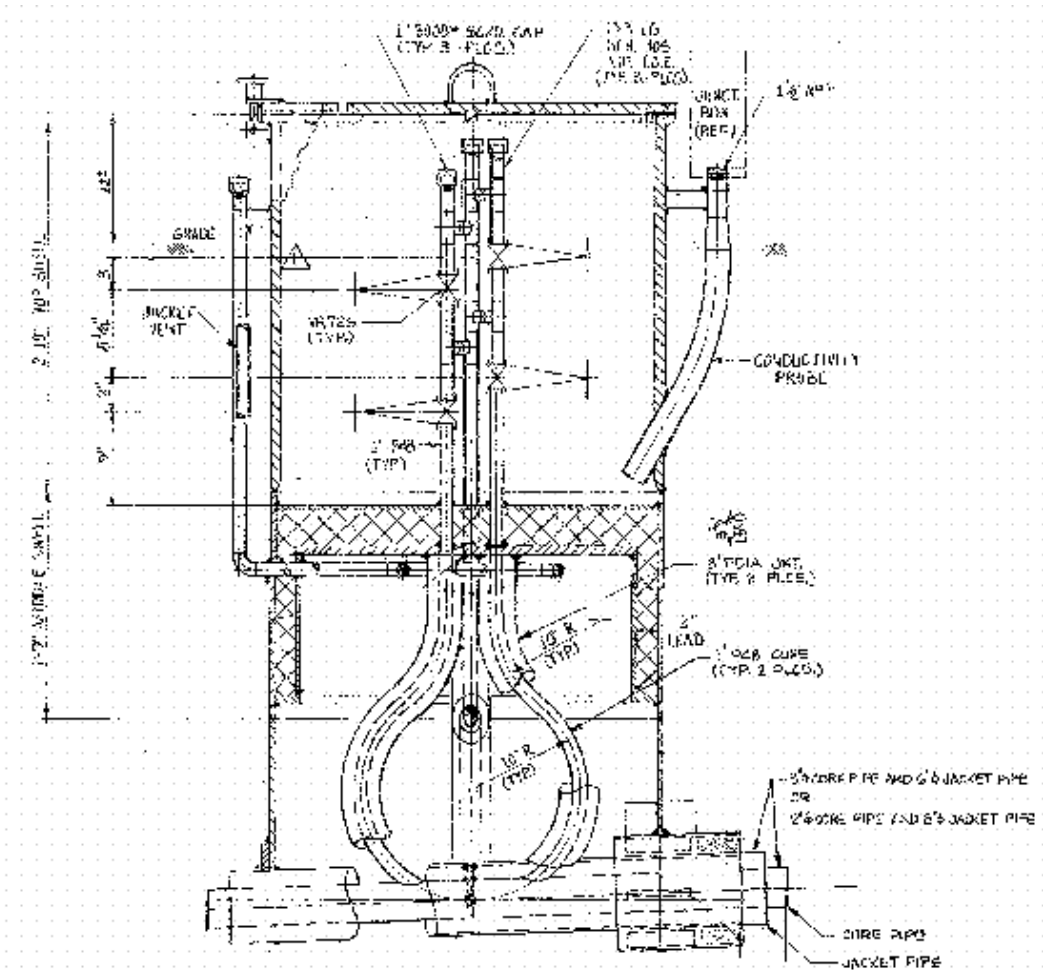

Figure 3: Typical Cleanout Piping Configuration