Savannah River Site
High Level Waste Salt Disposition
Systems Engineering Team

HLW Salt Disposition Alternatives Identification
Preconceptual Phase I
Summary Report

WSRC-RP-98-00162

April 17, 1998

Copy #2

DISCLAIMER

This report was prepared as an account of work sponsored by an agency of the United States Government. Neither the United States Government nor any agency thereof, nor any of their employees, make any warranty, express or implied, or assumes any legal liability or responsibility for the accuracy, completeness, or usefulness of any information, apparatus, product, or process disclosed, or represents that its use would not infringe privately owned rights. Reference herein to any specific commercial product, process, or service by trade name, trademark, manufacturer, or otherwise does not necessarily constitute or imply its endorsement, recommendation, or favoring by the United States Government or any agency thereof. The views and opinions of authors expressed herein do not necessarily state or reflect those of the United States Government or any agency thereof.

DISCLAIMER

Portions of this document may be illegible in electronic image products. Images are produced from the best available original document.

HLW Salt Disposition Alternatives Identification
Preconceptual Phase I Summary Report

Prepared By: _____ 4-17-98
HLW Salt Disposition Systems Engineering Team **Date**

Approved By: _____ 4-17-98
Steve Piccolo, **Date**
WSRC Team Leader
HLW Salt Disposition Systems Engineering Team

REVISION SUMMARY

Rev. No.	Rev. Date	Affected Sections	Description of Revision
0	4/17/98	N/A	Initial Issue

TABLE OF CONTENTS

	Section	Page
1.0	Executive Summary	5
2.0	Purpose	7
3.0	Introduction	8
	3.1 HLW System Mission	9
	3.2 HLW System Overview	10
4.0	Systems Engineering Team	13
	4.1 Team Charter	13
	4.2 Team Membership	13
5.0	Systems Engineering Process Overview	15
6.0	Initial Design Input	18
7.0	Alternatives	19
	7.1 Alternative Identification Process	19
	7.2 Evaluation Process and Selection Criteria	19
	7.3 Selected Alternatives	20
8.0	Conclusions	25
9.0	References	26
10.0	List of Abbreviations	27

SECTION 1.0

EXECUTIVE SUMMARY

1.0 Executive Summary

The High Level Waste (HLW) Salt Disposition Systems Engineering Team (henceforth referred to as Team) was formed on March 13,1998, under the sponsorship of the WSRC High Level Waste Vice President and General Manager. The Team is chartered to identify options, evaluate alternatives and recommend a selected alternative(s) for processing HLW salt to a permitted waste form. This requirement arises because the existing In Tank Precipitation (ITP) process, as currently configured, cannot simultaneously meet the HLW production and Authorization Basis safety requirements. DOE-SR concurs with this approach.

For the past two years, chemistry studies aimed at developing an understanding of the reaction mechanisms and kinetics associated with the ITP process have been underway. These studies are intended to lead to closure of DNFSB Recommendation 96-1 and the results will be input to the process for evaluating alternatives.

The Team is comprised of appropriately qualified experts from WSRC and its partners, with outside consultant support from academia, National Laboratories and the DOE complex. Team membership is identified in the HLW Salt Disposition Systems Engineering Team Charter. The overall methodology for achieving the Team's mission is described in the Systems Engineering Management Plan.

Multiple approaches were used to identify alternative processes to meet the production and safety requirements for salt disposition. Formal brainstorming sessions with a range of stakeholders were supplemented by historical reviews and literature surveys. In addition, a Briefing Package for soliciting site wide experience was distributed to SRS Operations and Engineering. DOE complex and other chemical processing experience, e.g. Corps of Engineers, ORNL, BNFL, were accessed for ideas through knowledgeable individuals on the site. All ideas were captured on a "Pro Forma" sheet included in the briefing package.

The resulting list of approximately 130 alternatives was evaluated against a set of minimum screening criteria which included scientific maturity, engineering maturity, implementation feasibility, safety, licensable and feasibility of permitting the final waste form. Alternatives were either accepted as written, modified by combination or addition, or dropped. Ranking was performed within technology categories in order to focus on the alternatives with the highest potential for success. The result of the exercise was an "initial list" of eighteen alternatives selected for further evaluation, which were grouped in categories including: Crystallization, Electrochemical Separation, Ion Exchange, Precipitation, Solvent Extraction and Vitrification.

The main focus of the Team's work in Phase II will be on the application of screening criteria for performance of a preliminary technical and programmatic risk assessment of the eighteen alternatives to establish a short list for detailed evaluation. New ideas or alternatives will continue to be identified over the coming weeks. The same structured systems engineering approach will be applied to any new or modified alternatives throughout the study until a final alternative(s) is recommended.

This report meets the major milestone Phase I Deliverable specified in the team charter.

SECTION 2.0

PURPOSE

2.0 Purpose

The purpose of this report is to summarize the process used by the Team to systematically develop alternative methods or technologies for final disposition of HLW salt. Additionally, this report summarizes the process utilized to reduce the total list of identified alternatives to an "initial list" for further evaluation.

The results of the process utilized are captured in the Position Paper on the Evaluation Leading to the "Initial List" of Alternatives (ref. 1). The initial list of alternatives are described in Section 7.3 of this report.

This report constitutes completion of the team charter major milestone Phase I Deliverable. (Milestone Date 4/17/98)

SECTION 3.0

INTRODUCTION

3.0 Introduction

The High-Level Waste System is a set of seven different interconnected processes (Figure 1) operated by the High Level Waste and Solid Waste Divisions. These processes function as one large treatment plant that receives, stores, and treats high-level wastes at SRS and converts these wastes into forms suitable for final disposal. The three major permitted disposal forms are borosilicate glass, planned for disposal at a Federal repository; saltstone grout, disposed in vaults on the SRS site; and treated water effluent, released to the environment.

These processes currently include:

1) High-Level Waste Storage and Evaporation (F and H Area Tank Farms)
2) Salt Processing (In-Tank Precipitation and Late Wash Facilities)
3) Sludge Processing (Extended Sludge Processing Facility)
4) Vitrification (Defense Waste Processing Facility)
5) Wastewater Treatment (Effluent Treatment Facility)
6) Solidification (Saltstone Facility)
7) Organic Destruction (Consolidated Incineration Facility)

F and H Tank Farm, Extended Sludge Processing, Defense Waste Processing Facility, Effluent Treatment Facility, Saltstone Facility and the Consolidated Incineration Facility are all operational. In Tank Precipitation Facility operations are limited to safe storage and transfer of materials. The Late Wash Facility has been tested and is in a dry lay-up status. The In-Tank Precipitation Facility (ITP) initiated radioactive operation in Tank 48H in September of 1995. During pump operation in December of 1995, benzene evolved from Tank 48H at higher rates than expected, though the operational safety limit was never approached. The benzene was generated as a byproduct of the process from the catalytic decomposition of sodium tetraphenylborate (NaTPB).

In August 1996, the Defense Nuclear Facility Safety Board (DNFSB) issued Recommendation 96-1. The DNFSB recommended that operating and testing in the ITP Facility not proceed without an improved understanding of the mechanisms of benzene generation, retention, and release. In response to Recommendation 96-1 efforts to explain, through chemistry research, benzene generation, retention and release were conducted from August 1996 through March 1998.

These studies indicated that production goals and safety requirements for processing of HLW could not be accomplished in the ITP Facility as configured. This resulted in a WSRC recommendation to the Department of Energy in January 1998 to conduct a systems evaluation of salt disposition options and to recommend the preferred alternative. The salt will remain in storage until an alternative salt pre-

treatment process is identified and implemented. Alternative processes will be evaluated throughout 1998.

In March 1998, a team was selected to perform a structured systems engineering analysis of options for salt disposition. Guidance for the Team is documented in the charter (ref. 1). The task of salt disposition evaluation is broad based in technical scope and is not limited to any single process. Precipitation methods, ion exchange processes, other chemical or mechanical separation techniques, direct vitrification options, or combinations of these options are being considered.

Although the process selected will be specifically for HLW salt disposition, the team must address the system impact for all HLW facilities. Additionally, the selected alternative must interface safely and efficiently with the remainder of processing facilities outside of HLW. Timeliness of the selection of alternatives is key to support tank farm space/water inventory management and the Federal Facility Agreement (FFA) for tank closure.

3.1 HLW System Mission

The mission of the HLW System is to receive and store SRS high-level wastes in a safe and environmentally sound manner and to convert these wastes into forms suitable for final disposal. The planned forms are: 1) borosilicate glass to be sent to a Federal repository, 2) saltstone to be disposed of on site, and 3) treated wastewater to be released to the environment. Also, the storage tanks and facilities used to process the high-level waste must be left in a state such that they can be decommissioned and closed in a cost-effective manner and in accordance with appropriate regulations and regulatory agreements.

The FFA requires removal of the waste from the high-level waste tanks to resolve several safety and regulatory concerns. Tanks have leaked observable quantities of waste from primary to secondary containment. Other tanks have known penetrations above the liquid level, although no waste has been observed to leak through these penetrations. The "old style" tanks do not meet EPA secondary containment standards for storage of hazardous waste, (effective January 12, 1987).

The FFA for SRS addresses the DOE committed schedule for removing the wastes from the tanks.

All high-level wastes in storage at SRS are Land Disposal Restricted (LDR) wastes, which are prohibited from permanent storage. Since the planned processing of these wastes will require considerable time and therefore

continued storage of the waste, DOE has entered into a compliance agreement with the EPA and SCDHEC. This compliance agreement is implemented through the Site Treatment Plan (STP) which requires processing of all the high-level waste at SRS according to a schedule negotiated between the parties

The problem confronting the HLW overall mission is that the currently configured in-tank precipitation process cannot simultaneously meet the HLW flowsheet production goals and the safety requirements. The WSRC recommended that alternative concepts and technologies be evaluated. The HLW Salt Disposition Systems Engineering Team was formed and chartered to perform this task. The Mission Need defined for the Team is:

"The SRS HLW salt needs to be immobilized for final disposition in support of environmental protection, safety, and current and planned missions".

3.2 HLW System Overview

Figure 1 schematically illustrates the routine flow of wastes through the HLW System. The various processes within the system and external processes are shown in rectangles. The numbered streams identified in italics are the interface streams between the various processes. The discussion below represents the HLW system configuration as of January 1998.

Incoming high-level wastes are received into HLW Storage and Evaporation (F and H Tank Farms) (Stream 1). The function of HLW Storage and Evaporation is to safely concentrate and store these wastes until downstream processes are available for further processing. The decontaminated liquid from the evaporators are sent to Wastewater Treatment (ETF) (Stream 13).

The insoluble sludges that settle to the bottom of waste receipt tanks in HLW Storage and Evaporation are slurried using hydraulic slurrying techniques and sent to Extended Sludge Processing (ESP) (Stream 2). In ESP, sludges high in aluminum are processed to remove some of the insoluble aluminum compounds. All sludges, including those that have been processed to remove aluminum, are washed with water to reduce their soluble salt content. The spent washwater from this process is sent back to the HLW Storage and Evaporation (Stream 3). The washed sludge is sent to Vitrification (DWPF) for feed pretreatment and vitrification (Stream 4).

Saltcake is redissolved using hydraulic slurrying techniques similar to sludge slurrying. As currently designed, the salt solutions from this operation, and other salt solutions from HLW Storage and Evaporation, were intended for

feed to Salt Processing (ITP) (Stream 5). In ITP, the salt solution would be processed to remove radionuclides, which are concentrated into an organic precipitate. The decontaminated filtrate would then be sent to Tank 50. A concentrated organic precipitate, containing most of the radionuclides, is produced by the process. This precipitate is washed with water to remove soluble salts. However, some soluble corrosion inhibitors which interfere with DWPF processing must be left in the precipitate after washing because the precipitate is stored in carbon steel tanks, which are susceptible to corrosive attack by uninhibited precipitate wastes.

The precipitate is transferred to Late Wash for further washing in stainless steel tanks to reduce the level of soluble corrosion inhibitors to acceptable levels for the DWPF process (Stream 7). The washwater from this process is returned to ITP to be reused in the ITP process (Stream 8).

The washed precipitate from Late Wash is then sent to the DWPF vitrification building (221-S). In the vitrification building, the precipitate is catalytically decomposed and separated into two streams: a mildly contaminated organic stream and an aqueous stream containing virtually all of the radionuclides. The mildly contaminated organics are stored at DWPF and eventually transferred to Organic Destruction (CIF) (Stream 11). The aqueous stream is combined with the washed sludge from ESP, which has undergone further processing and the mixture vitrified.

The washed sludge from ESP (Stream 4) is chemically adjusted in the DWPF to prepare the sludge for feed to the glass melter. As part of this process, mercury is stripped out, purified and sent to mercury receivers (Stream 12). The aqueous product from organic decomposition is added to the chemically adjusted sludge. The mixture is then combined with glass frit and sent to the glass melter. The glass melter drives off the water and melts the wastes into a borosilicate glass matrix, which is poured into a canister. The canistered glass waste form is sent on to site interim storage, and will eventually be disposed of in a Federal repository (Stream 9).

The water vapor driven off from the melter along with other aqueous streams generated throughout the DWPF vitrification building are recycled to HLW Storage and Evaporation for processing (Stream 10).

Overheads from the HLW Storage and Evaporation evaporators are combined with overheads from evaporators in the F and H Area Separations processes and other low-level streams from various waste generators. This mixture of low-level wastes is sent to the ETF (Stream 13).

In the ETF, these low-level wastes are decontaminated by a series of cleaning processes. The decontaminated water effluent is sent to the H Area outfall and eventually flows to local creeks and the Savannah River (Stream 14). The contaminants removed from the water are concentrated and sent to Tank 50 (Stream 15).

In Tank 50 the concentrate from the ETF is combined with the decontaminated filtrate from the ITP and sent to Saltstone (Stream 6). In the Saltstone Facility the liquid waste is combined with cement formers and pumped as a wet grout to Landfill, a vault (Stream 16). In the vault, the cement formers hydrate and cure, forming a saltstone monolith. The Saltstone Facility vaults will eventually be closed as a landfill.

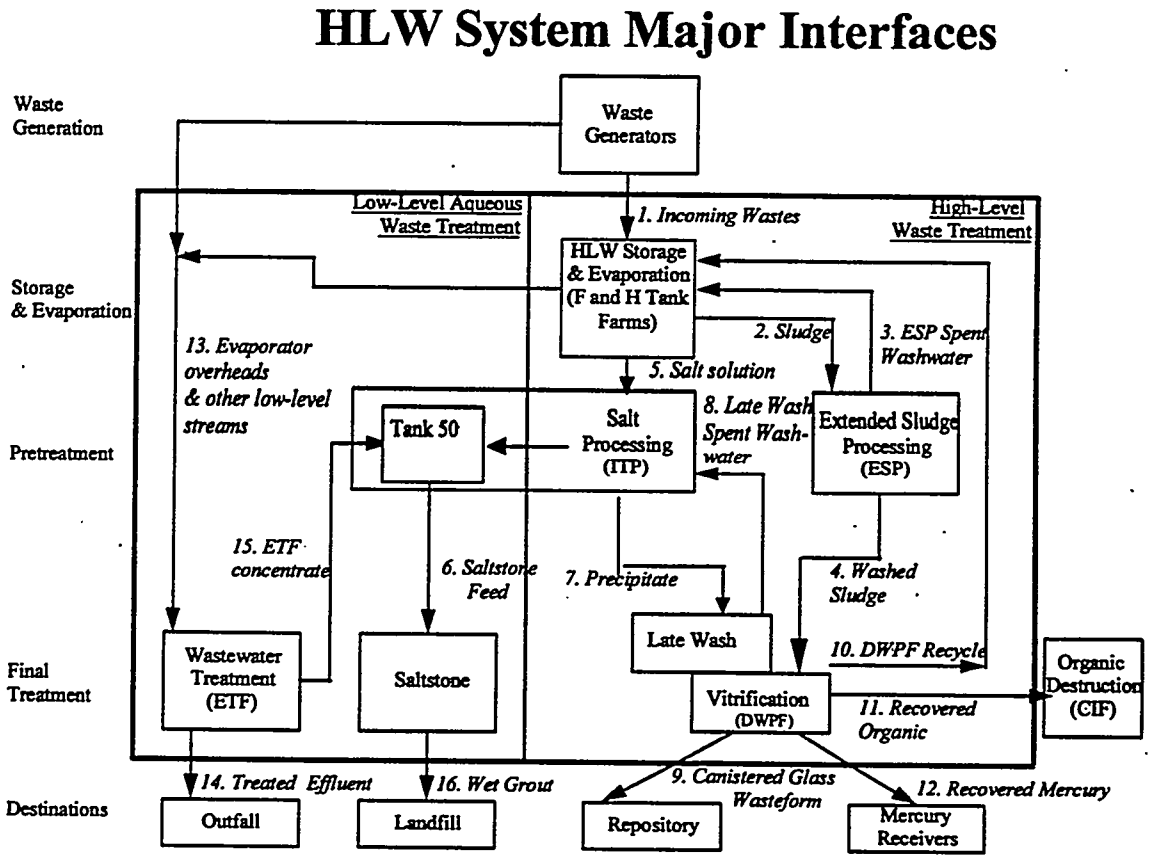

Figure 1. HLW System Major Interfaces

SECTION 4.0

SYSTEMS ENGINEERING TEAM

4.0 Systems Engineering Team

The WSRC recommendation to DOE for the evaluation of alternative technologies and/or concepts to the currently configured ITP process resulted in the formation of the SRS High Level Waste Salt Disposition Systems Engineering Team. DOE-SR concurs with this approach (ref. 2). The Charter and membership of the Team are discussed below.

4.1 Team Charter

The Team was chartered on March 13, 1998 (ref. 3). The Charter discusses the Team's objective, the required team membership attributes, the requirement to follow the Systems Engineering approach, and the major deliverables and milestones expected of the Team.

4.2 Team Membership

The members of the Team, their role on the Team and company affiliation are shown below:

Team Member	Role	Company Affiliation*
Steve Piccolo	Team Leader	WSRC
Gary Abell	Systems Engineering	WSRC
Jeff Barnes	Operations	WSRC
John Carlson (Ed Murphy-Alternate)	Safety & Regulatory Eng.	WSMS
Dr. Ed Cussler	Chemical Engineering/Academia	Univ. of Minnesota
Peter Hudson	Waste Processing	BNFL
Dr. Lucien Papouchado	Science/Site Research	WSRC
Ken Rueter	Process Engineering	WSRC
Dr. Jack Watson	Science/National Lab Research	ORNL
Gene Kosiancic	Process Engineering Consultant	Independent Contractor

*WSRC: Westinghouse Savannah River Company
*WSMS: Westinghouse Safety Management Solutions, Inc.
*BNFL: BNFL Savannah River Corporation
*ORNL: Oak Ridge National Laboratory.

Additional information, including biographies of team members, is provided in Candidate Selection for the HLW Salt Disposition Systems Engineering Team (ref. 4).

SECTION 5.0

SYSTEMS ENGINEERING PROCESS OVERVIEW

5.0 Systems Engineering Process Overview

The HLW Salt Disposition Team developed a Systems Engineering Management Plan (SEMP) (ref. 5). The SEMP outlines the steps and sequences of a systematic engineering process utilized by the Team in identifying and selecting the alternatives on the "initial list". In essence, the Systems Engineering (SE) approach mandates that the correct problem is defined, a mission is created to solve the problem, and a definition of what the solution must do (functions) and how well it must do it (requirements) be addressed (ref. 6) before selecting solutions.

Use of the SE approach, to identify a preferred alternative to the currently configured ITP process, is required by the HLW Salt Disposition Systems Engineering Team Charter.

The SE approach is a top down process and is recognized as a viable technical management approach to define and control the development of complex technical programs/systems with many uncertainties, interfaces, and elements. The main goal of the SE approach is to deliver an end product that meets cost, schedule, and technical requirements while minimizing the environmental, safety, and health risks. The use of this approach will enable the HLW Salt Disposition Systems Engineering Team to meet its intended goal. The major process steps are discussed below and are illustrated in Figure 2.

- Definition and Development

  Definition and development represents the logical sequence of activities and decisions designed to transform facility operational needs and customer requirements into a preferred system concept, design, and its related performance parameters to meet the Mission Need. Definition and development steps include:

  - Mission Definition and Analysis
  - Functions and Requirements
  - Alternative Designs, Evaluation, and Selection
  - Verification and Validation

- Technical Program Planning and Control

  Technical program planning and control encompasses management activities to effectively plan and control the activities to meet program technical requirements. These steps include:

  - Technical Integration

- Interface Control
- Risk Management (technical, programmatic, life cycle cost)
- Configuration Management
- Deliverables and Schedules

- Engineering and Programmatic Specialty Integration

  This integration is the timely and appropriate application of engineering efforts and specialty disciplines such as chemical processing, reliability, maintainability, life cycle cost, human factors, safeguards and security, environmental, authorization basis/safety, health, etc. This type of integration ensures that all aspects of the project are reviewed from the specialized areas important to project formulation, implementation, and operation.

Iterations of each aspect of the SE process will occur as the Team develops flow sheet detail for the alternatives and performs risk analysis.

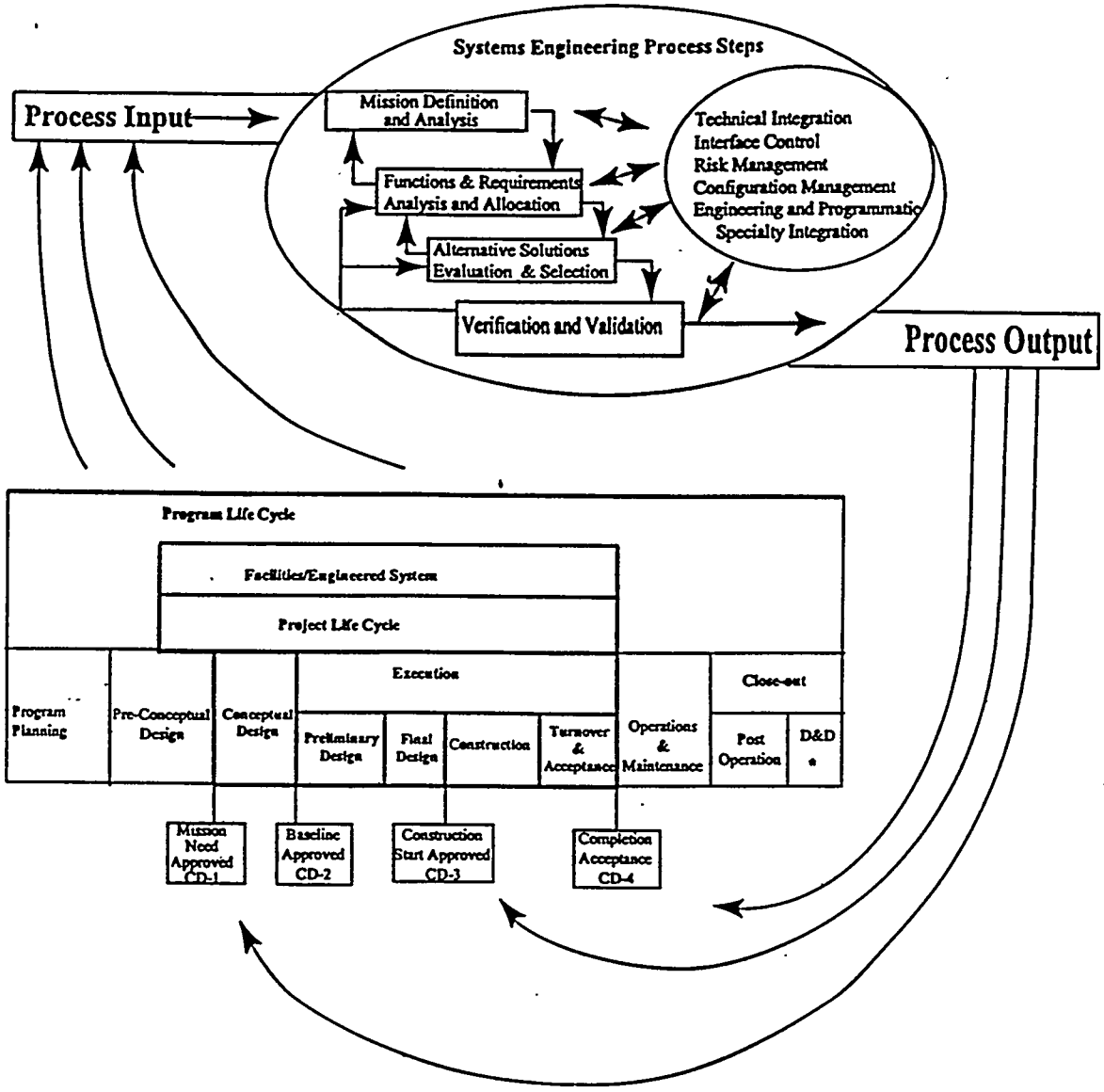

CD = Critical Decision (DOE)
D&D = Decontamination & Decommission

Figure 2. Relationship of the Systems Engineering Process and Project Life Cycle

SECTION 6.0

INITIAL DESIGN INPUT

6.0 Initial Design Input

The HLW Salt Disposition Team developed the necessary and sufficient Level 1, 2, and 3 functions and requirements that any potential alternative would have to meet. These functions and requirements were based on a Problem Statement and Mission Need. In addition, the Team identified the external interfaces with which the alternative solutions would interface. Finally, the Team developed a "Functional Model" and a "Universal Model" which envelop all generic scenarios for alternatives.

These models were used to initiate thought on alternatives to the in-tank precipitation process while still ensuring consideration of the Team Mission Statement and overall HLW system interfaces.

HLW SALT DISPOSITION SYSTEM ENGINEERING TEAM MODEL

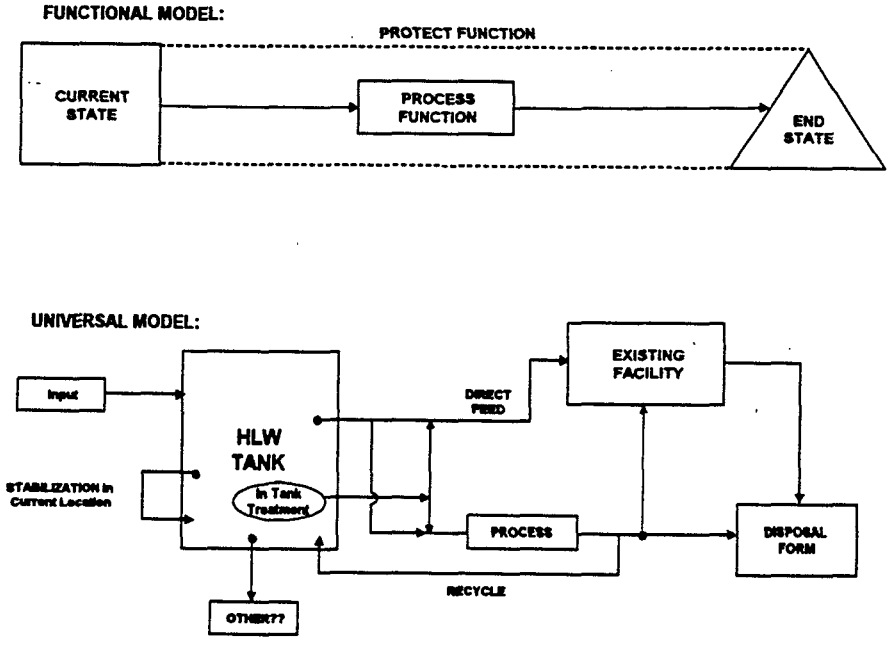

The information, discussed above, is considered design input and resides in the "Preconceptual – Phase I Initial Design Input" document (ref. 7).

SECTION 7.0

ALTERNATIVES

7.0 Alternatives

The Team's "initial list" of selected alternatives is summarized in Section 7.3. The list contains 18 alternatives for HLW salt disposition. The rigorous and systematic approach used to identify and evaluate approximately 130 suggestions, ideas, and concepts submitted to the Team for consideration is defined in Position Paper on the Evaluation Leading to the "Initial List" of Alternatives (ref. 1).

The structured SE approach allows new or modified alternatives to be considered. Processes used for Alternative Identification (section 7.1) and subsequent Evaluation and Selection (section 7.2) will be applied to new or modified alternatives.

7.1 Alternative Identification Process

Early in the Preconceptual phase, the Team established the methodology for searching out possible alternatives. The Position Paper on Identifying Alternatives to the In-Tank Precipitation Process (ref. 8) describes the methods utilized to gather information. Identification of Alternatives Briefing Package (ref. 9) was developed and distributed to collect engineering and operations input across the SRS. Formal brainstorming sessions were held with important stakeholders and customer representatives. Independent subject matter experts were consulted from National Laboratories, academia and the chemical industry for alternative identification. Literature searches were tasked to National Laboratories as a cross check to the Team experience and expertise.

7.2 Evaluation Process and Selection Criteria

The process selected for evaluation and selection of alternatives (ref. 5) needed to encompass wide ranges of technical options and combinations of ideas. To ensure SE principles for structured analysis were applied, three levels of decisions were performed.

Alternatives were organized by technology category. Broad screening criteria, technical maturity and likelihood of successful deployment, were applied to the technology categories. The next step screened individual alternatives within each technology category against more detailed criteria. The third step ranked the alternatives or combination of alternatives.

The technology categories are as follows:

- **Crystallization (CR)** - Separation of the cesium from non-radioactive salts by fractional crystallization
- **Electrochemical (EC)** - Electrochemical processes which achieve separation/destruction of different ionic components in the system
- **Elutable Ion Exchange (EX)** - Separation of cesium from HLW salt by regenerable ion exchange
- **Non-elutable Ion Exchange (NX)** - Separation of cesium from HLW salt by non-regenerable ion exchange
- **Geological (GL)** - Alternatives more dependent on geology than processing
- **Inorganic Precipitation (PI)** - Separation of the desired substance by addition of an inorganic precipitant
- **Organic Precipitation/Modify ITP (POM)** - Separation of cesium by addition of an organic precipitant with extensive use of the existing ITP Facility
- **Organic Precipitation/New Process (PON)** - Separation of cesium using a facility substantially different from the existing ITP Facility
- **Solvent Extraction (SE)** - The use of a solvent for separating cesium based on either an alkaline or acidic feed stream
- **Vitrification (VT)** - Disposition of the salt by vitrifying it either in DWPF or using new equipment or facilities
- **Miscellaneous (ML)** - Approaches not covered by the other categories

All technology categories survived the screening process. Individual alternatives were either accepted for further consideration, combined in whole or part with other ideas for further consideration, or dropped.

The Team screened approximately 130 alternatives and established an initial list of 18 for further evaluation. The list of 18 alternatives represents portions, combinations, modifications or hybrids of the original Pro-Formas, of which 26 were completely dropped.

7.3 Selected Alternatives

The alternatives selected for further evaluation are described in more detail in the Position Paper on the Evaluation Leading to the "Initial List" of Alternatives (ref. 1). Listed below is a brief description of each alternative.

Fractional Crystallization - DWPF Vitrification

The conceptual process would selectively remove sodium salts from acidified salt solution as sodium nitrate crystals leaving behind a liquid containing most of the cesium for vitrification at DWPF. The decontaminated crystals would be dissolved, neutralized and made into a Class A waste (grout) at the Saltstone Facility

Electrochemical Separation and Destruction – DWPF Vitrification

The conceptual process would utilize an electrochemical cell through which filtered supernate would be transferred to an electrochemical cell to convert nitrates and nitrites to hydroxides. The resultant liquid would be pumped through an electro-chemical membrane to produce two streams. The first stream is a small volume of alkaline solution enriched in cesium for feed to DWPF, the second is a large volume of caustic solution for recycle to the tank farm and/or saltstone disposal.

Elutable Ion Exchange - DWPF Vitrification

The conceptual process uses an elutable ion exchange resin (e.g. crown ether) to remove cesium and a second elutable resin for strontium, plutonium and uranium removal. The radionuclides would be eluted with nitric acid and vitrified at DWPF. The decontaminated salt solution would be made into a Class A waste (grout) at the Saltstone Facility.

Potassium Removal followed by TPB Precipitation

The conceptual process would use a potassium specific resin to remove most (~90%) of the potassium from salt solution prior to precipitation with sodium tetraphenyl borate (TPB). This would dramatically reduce the use of TPB and resulting benzene production. The cesium precipitate would be vitrified in DWPF, together with the monosodium titanate used for removal of the strontium, plutonium, and uranium. The potassium and decontaminated salt solution would be made into a Class A waste (grout) at the Saltstone Facility.

Acid Side Ion Exchange - DWPF Vitrification

The conceptual process would employ one of several effective cesium removal resins in an acidic flowsheet such as ammonium molybdophosphate on polyacrylonitrile resin. If elutable, the eluate containing cesium would be fed to DWPF. If non-elutable, the loaded resin would be vitrified at DWPF. The decontamination salt solution would be made into Class A waste (grout) at the Saltstone Facility.

Crystalline Silicotitanate (CST) Ion Exchange – DWPF Vitrification

The conceptual process would employ CST resin for cesium removal coupled with monosodium titanate (MST) addition for strontium, plutonium and uranium removal. The loaded CST resin and MST would be vitrified at DWPF. The decontaminated salt solution would be made into Class A waste (grout) at the Saltstone Facility.

Crystalline Silicotitanate (CST) Ion Exchange – New Facility Vitrification

The conceptual process would employ CST resin for cesium removal coupled with monosodium titanate (MST) addition for strontium, plutonium and uranium removal. The loaded CST resin and MST would be vitrified at a new dedicated vitrification facility. The decontaminated salt solution would be made into Class A waste (grout) at the Saltstone Facility.

Zeolite Ion Exchange - DWPF Vitrification

The conceptual process would utilize zeolite resin to remove cesium and a second zeolite resin to remove strontium, plutonium, and uranium. The loaded resins would be vitrified at DWPF. The decontaminated salt solution would be made into Class A waste (grout) at the Saltstone Facility.

Crystalline Silicotitanate (CST) Ion Exchange – Ceramic Waste Form

The conceptual process would employ CST resin for cesium removal coupled with monosodium titanate (MST) addition for strontium, plutonium and uranium removal. The loaded CST resin would be converted to a ceramic waste form. The ceramic would be stored on site until the cesium activity was negligible (~300 years).

Reduced Temperature ITP

The conceptual process is a variation on the current In-Tank Precipitation (ITP) flowsheet. The flowsheet process would be the same but modifications would be required to maintain TPB slurry and filtrate temperatures below 25°C. This would increase precipitate stability and reduce benzene generation.

Catalyst Removal ITP

The conceptual process is a variation on the current ITP flowsheet. This process requires an additional process step to remove both solid catalyst (entrained sludge) and soluble catalyst (metal ions in the salt solution). This would increase precipitate stability and reduce benzene generation.

ITP with Enhanced Safety Features

The conceptual process is similar to the current ITP flowsheet. The modifications would compensate for Authorization Basis safety issues with Engineered Safety Features.

Small Tank TPB Precipitation

The conceptual process would be a series of Continuous Stirred Tank to conduct a TPB precipitation. This is followed by a chilled concentrate tank for storage of the precipitate. This reduces cycle time and total inventory, thereby reducing the hazardous material source term. The downstream process would be similar to the current ITP flowsheet.

Caustic Side Solvent Extraction - DWPF Vitrification

The conceptual process would encompass multiple extraction, scrub and strip stages with a diluent and an extractant such as a crown ether for cesium removal. The cesium would then be stripped from the solvent with dilute acid and vitrified at DWPF. The decontaminated salt solution would be made into a Class A waste (grout) at the Saltstone Facility.

SECTION 8.0

CONCLUSIONS

8.0 Conclusions

The structured Systems Engineering approach utilized by the team successfully captured and evaluated a wide range of alternatives for SRS HLW salt disposition. The evaluation considered the best solution options of approximately 130 alternatives and resulted in 18 alternatives for further evaluation.

The continuing evaluation (Team Charter Phase II) has been initiated. Phase II is focused primarily on continuing the risk assessment process and development/application of weighted evaluation criteria necessary to establish a short list. Risk evaluation in Phase II is searching for critical technology issues that could cause failure to implement a given technology. The evaluation criteria to be used in the process of establishing the short list encompass the following:

- Technology risk will assess the unknowns with new technology or new applications of existing technology.
- Interface risk will assess impact on current HLW and Solid Waste operations.
- Safety risk will assess nuclear safety, process hazards and accident conditions as well as permit and license requirements.
- Design risk will assess primarily three topical areas:
  - current completeness of identified functions and requirements
  - identification of complex operation conditions
  - identification and adjustment of design assumptions
- Cost/schedule risk will assess the potential risk for implementation (science to engineering) of each alternative focusing on infrastructure, material, operational interfaces and complex construction feasibility.

The Team will continue with the scheduled evaluations as defined in the team charter.

SECTION 9.0

REFERENCES

9.0 References

The following references were listed in Sections 1.0 to 8.0 of this report.

1. High Level Waste Salt Disposition Systems Engineering Team Position Paper on the Evaluation Leading to the "Initial List" of Alternatives

2. Greg Rudy to James M. Owendoff letter dated March 16, 1998

3. Charter for the SRS High Level Waste Salt Disposition Systems Engineering Team

4. Candidate Selections for the HLW Salt Disposition Systems Engineering Team

5. WSRC-RP-98-00163, Systems Engineering Management Plan for Development of Alternatives to Process and Dispose of High Level Waste Salt (U)

6. High Level Waste Salt Disposition Interface Requirements, Revision C

7. Preconceptual-Phase I Initial Design Input

8. High Level Waste Salt Disposition Systems Engineering Team Position Paper on Identifying Alternatives to the In-Tank Precipitation Process

9. Identification of Alternatives Briefing Package

SECTION 10.0

LIST OF ABBREVIATIONS

10.0 List of Abbreviations

The following abbreviations are used through the report and are listed for clarification.

1. **CD** - Critical Decision
2. **CIF** - Consolidated Incineration Facility
3. **Cs** - Cesium
4. **D&D** - Decontamination and Decommission
5. **DNFSB** - Defense Nuclear Facility Safety Board
6. **DOE** - Department of Energy
7. **DOE-SR** - Department of Energy - Savannah River
8. **DWPF** - Defense Waste Processing Facility
9. **e.g.** - that is
10. **EPA** - Environmental Protection Agency
11. **ESP** - Extended Sludge Processing
12. **ETF** - Effluent Treatment Facility
13. **FFA** - Federal Facility Agreement
14. **HLW** - High Level Waste
15. **ITP** - In-Tank Precipitation
16. **MST** – Monosodium Titanate
17. **N/A** - Not Applicable
18. **NaTPB** - Sodium Tetraphenylborate
19. **ORNL** - Oak Ridge National Laboratory

20. **SCDHEC** - South Carolina Department of Health and Environmental Control

21. **SE** - Systems Engineering

22. **SEMP** - Systems Engineering Management Plan

23. **SRS** - Savannah River Site

24. **TBD** - To Be Determined

25. **WSMS** - Westinghouse Safety Management Solutions, Inc.

26. **WSRC** - Westinghouse Savannah River Company

ATTACHMENT 1

High Level Waste Salt Disposition Systems Engineering Team Position Paper on the Evaluation Leading to the "Initial List" of Alternatives

SAVANNAH RIVER SITE

HIGH LEVEL WASTE SALT DISPOSITION SYSTEMS ENGINEERING TEAM

POSITION PAPER

ON THE

EVALUATION LEADING TO THE "INITIAL LIST"

OF ALTERNATIVES

APPROVED: _____ DATE: 4-17-98

Steve Piccolo: HLW Salt Disposition
Systems Engineering Team Leader

PURPOSE

The SRS High Level Waste Salt Disposition Systems Engineering Team ("Team") was chartered (Ref. 1) to systematically develop and recommend an alternative method and/or technology for disposition of High Level Waste Salt by the end of FY1998. The Team Charter prescribes a number of major milestones to be met in accomplishing the task. One of these major milestones is a report summarizing the activities leading to an initial list of alternatives and screening criteria for the short list. This Position Paper provides additional detail pertaining to the evaluation methods and criteria used to create the "initial list," the alternatives considered in the process and the disposition of the considered alternatives in support of the required report.

BACKGROUND

The DOE complex in the U.S., and other organizations worldwide, have been developing and implementing high level waste immobilization and disposal methods for the past several decades.

In Europe, as well as in other foreign countries, waste has been predominantly stored in a concentrated acid form in stainless steel tanks. Immobilization processes have then relied on direct vitrification of that waste stream. In the U.S. (SRS, Hanford, West Valley, Oak Ridge) the waste was neutralized with strong caustic and stored in carbon steel tanks. This separates the waste into an insoluble sludge fraction (about 10%) of hydrated metal oxides containing most of the radionuclides (strontium, plutonium, uranium and others). The remaining salt solution is primarily sodium nitrate, hydroxide and nitrite with cesium-137 as the predominant radionuclide. This is stored as a concentrated solution or saltcake.

At SRS, an organic precipitating agent (sodium tetraphenyl borate) was selected as the preferred method of separating cesium and feeding that to the DWPF for treatment, mixing with the radioactive sludge, and feeding to the melter. The decontaminated salt (which is the bulk of the waste) can then be fed to a lower cost grouting facility for onsite disposal. The precipitation process was developed and demonstrated on a full scale radioactive tank in the mid 1980's. However, recent large scale tests and an extensive R&D program have shown operating and authorization basis drawbacks sufficient for SRS to re-evaluate the alternatives for salt treatment processes to minimize all the risks.

PROCESS OVERVIEW

Two aspects of the Team Charter had to be accommodated in the final process - the need to comprehensively consider all available alternatives and the goal of recommending a preferred alternative(s) within a six to nine month time frame. The process also had to preserve any fragments of non-viable alternatives with the potential to be modified or combined to create a new alternative.

Figure 1 is a representation of the selection process for the initial list. The position paper on data collection (Ref. 4) describes the process which took advantage of the considerable work already performed with regard to processes related to the disposition of HLW Salt to select viable alternatives for further evaluation. The selection methodology has explicit steps to require full consideration of potentially favorable fragments of dropped alternatives (such as choices among possible reagents and/or engineering implementations).

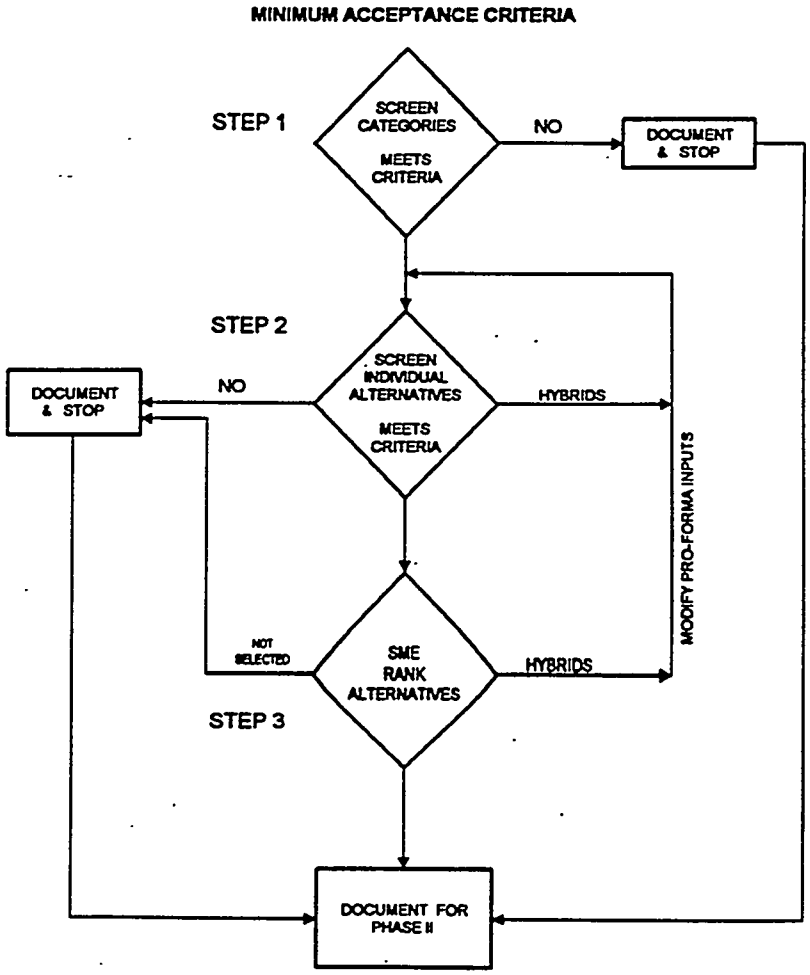

Figure 1. Alternative Down Select Process for the Phase I Preconceptual Initial List

The first step groups proposed alternatives into categories based on technology, which are then screened for basic viability (in this case all of the categories passed). All the alternatives embodied within the categories are then reviewed individually at the second step. This step screens the individual alternatives against criteria representing the Level 1 Mission Requirements from the "Preconceptual – Phase I, Initial Design Input" document (Ref. 2). The most favorable alternatives from each category, as ranked in step three, are then carried forward to the initial list.

This same process will be used to screen subsequent alternatives arising from parallel Team efforts, such as literature searches and inquiries among the professional and commercial communities, as input from those sources becomes available. Alternatives arising from these and other sources will be screened until the Team makes its recommendation of a preferred alternative(s). Periodic reviews are required as an integral part of the process to determine if previously discarded alternatives should be reconsidered on the basis of new information.

The need to further develop promising concepts on a timely basis is met by the early screening of currently known alternatives. The need to consider new alternatives developed from ongoing work is met by providing full consideration and screening to them.

The entire selection process leading to the preferred alternative(s) is described more fully in the Systems Engineering Management Plan (Ref. 3).

GENERATION AND ORGANIZATION OF ALTERNATIVES

As described in References 3 and 4 ,the input for the selection of the initial list was generated from a number of sources, including SRS employee input, historical reviews, formal brainstorming and early, informal, results from independent subject matter experts. This input was documented on "Pro Forma" sheets. These sheets were used to assure an adequate description of the proposed method or technology, to support screening, and to capture the originators' views on strengths and weaknesses of the proposal. These alternatives were then grouped by the Team into the following categories:

- Crystallization (CR) – Separation of cesium from non-radioactive salts by fractional crystallization
- Electrochemical (EC) – Electrochemical processes which achieve separation/destruction of different ionic components in the system
- Elutable Ion Exchange (EX) – Separation of cesium from HLW salt by regenerable ion exchange
- Non-elutable Ion Exchange (NX) – Separation of cesium from HLW salt by non-regenerable ion exchange
- Geological (GL) – Alternatives more dependent on geology than processing
- Inorganic Precipitation (PI) – Separation of cesium by addition of an inorganic precipitant
- Organic Precipitation/Modify ITP (POM) – Separation of cesium by addition of an organic precipitant with extensive use of the existing ITP facility
- Organic Precipitation/New Process (PON) – Separation of the cesium using a facility substantially different from the existing ITP facility
- Solvent Extraction (SE) – The use of a solvent for separating cesium based on either an alkaline or acidic feed stream
- Vitrification (VT) – Disposition of the salt by vitrifying it either in DWPF or using new equipment or facilities
- Miscellaneous (ML) – Approaches not covered by the other categories

The Pro Forma sheets were sequentially numbered within each category. Additional Pro Forma sheets were later created by the Team based on this input and Team discussions. These additional Pro Forma sheets were also grouped into the categories. All of the Pro Forma sheets generated during the creation of the initial list are indexed in Table 1 and presented in Attachment 1.

SCREENING OF CATEGORIES (STEP 1)

Per Figure 1, the first step of the screening process was to assure that the categories were viable for continued consideration. The "Preconceptual – Phase I, Initial Design Input" document (Ref. 2) forms the basis for all screenings since it is a compilation of the "necessary and sufficient" requirements for the preferred alternative. However, in the case of category screening, it was necessary to simplify the evaluation criteria due to the lack of specificity inherent in a technology category and a requirement that the screening be sufficiently conservative so alternatives were not discarded if there was any potential that they could ultimately emerge as the preferred alternative. These considerations resulted in the Team choosing to apply two evaluation criteria and two rules for this screening:

Evaluation Criteria:

1. Technical Maturity – Does this category reflect concepts which have never been tested or, at the other extreme, are they fully proven in nuclear applications?

2. Reasonable Chance of Deployment – Given the technical maturity and degree of complexity of the technology, does it have a reasonable chance of deployment on the timescale needed by this project?

Rules:

1. In the event that there was insufficient expertise available to the Team to determine in this screening that a category clearly failed to meet one or both of the criteria, the category passed this screening and went on to the next level of review (i.e., insufficient knowledge to reject the category results in acceptance).

2. If any alternative in the category meets the two criteria, the category is accepted.

Note that cost was not explicitly used as a criterion for category screening due to the lack of implementation detail for the individual alternatives to support an evaluation against such a criterion.

Any categories screened out at this level would have the causative failure documented and the alternatives in the category would be dropped from further consideration.

After Team consideration and discussion, all of the categories were found to meet the criteria and all of the alternatives were taken to the individual screening step.

SCREENING OF ALTERNATIVES (STEP 2)

The next step of screening utilized the following evaluation criteria representing the Level 1 Mission Requirements from Reference 2. Level 1 Mission Requirements are identified in parentheses "( )" with more explicit lower tier requirements identified in square brackets "[ ]".

1. Safety
   - (a) Is the Process/Facility Licensable ? (R-1-1)
   - (b) Are the Emissions and Ultimate Waste Forms Permittable ? (R-1-2 & R-1-3)
   - (c) Does the Process Have Inherent Hazards ? (R-1-1)

2. Schedule
   - (a) Type I, II, & IV tanks will be ready for closure by 9/30/2020. (R-1-5)
   - (b) Type III and IIIA tanks will be ready for closure by 9/30/2028. (R-1-5)

3. Cost
   - (a) Full deployment must be implementable for < $? MM. (R-1-9)*

4. Science
   - (a) DNFSB Recommendation 96-1 issues must be resolvable for the proposed alternative. (R-1-10)
   - (b) Does the proposal have sufficient scientific maturity ? (R-1-3, R-1-4, R-1-6 & R-1-9) [R-1.4-4]

5. Process
   - a) Are External Interfaces Maintained ? (R-1-3, R-1-4 & R-1-6) [R-1.4-5]
     - a.1) Receive existing waste streams
     - a.2) Store existing waste streams
     - a.3) Effluent compatible with applicable facilities
   - b) Are Constructability and Maintainability Requirements Met ? (R-1-7 & R-1-8)[R-1.4-2]
   - (c) Are Existing Attainment Rates Met ? (R-1-5)
   - (d) Does the proposal have sufficient Engineering Maturity ? (R-1-8) [R-1.4-3]

*The Team recognized that cost was a necessary component of the evaluation, although a specific cost criterion would be difficult to establish. However, it was ultimately unnecessary to establish a specific dollar criterion as any alternative which had the potential to fail a conservative cost criterion tripped some other criterion.

Prior to reviewing each proposed alternative against these criteria, the alternatives were reviewed for similarities. In a number of cases the same concept was proposed by more than one person with variations in the wording of the description. In other cases alternatives were proposed which were specific cases of another more general alternative. These alternatives were grouped under a "flagship" alternative representing the group for consideration. In the event that a flagship alternative was not accepted for further consideration, the included alternatives were checked to determine if one or more would be acceptable.

After review against the criteria above, each alternative received one of four dispositions:

- Accept (Carried on to the next level of review)
- Reject (The failure to meet a specific criterion was documented, the alternative was not carried forward for further review)
- Included (Considered redundant to or a subset of the flagship alternative and dispositioned with it)
- Hybrid (The "stand-alone" alternative failed to meet one or more criteria, was documented for the failure and not carried on, but some aspect(s) of the alternative appeared to have merit when used in combination with other alternatives and/or hybrids and would be further considered in that context)

Table 2 is a list of the alternatives which were accepted for ranking. Alternatives listed in the "Comments" column in square brackets "[ ]" are Pro Forma identifiers included within the accepted alternative. *Table 3 is a list of alternatives which failed one or more criteria and were not carried forward.* A brief statement of a criterion(a) which was not met is given in the "Disposition" column. *Table 4 is a list of alternatives which, while not accepted as stand - alone alternatives, contain attributes for hybrid consideration.* The "Disposition" column briefly addresses criteria not met and the "Comment" states the concept hybridized.

FURTHER SCREENING OF ALTERNATIVES AND RANKING (STEP 3)

Additional alternatives generated by the Team based on hybrids or other ideas arising from the previous screening step were fully discussed and screened using the same process as applied to the original alternatives. Some new alternatives developed from hybrids and insights gained from the screening process were accepted as a result of this discussion and screening. They were documented through the generation of Pro Forma sheets and are included in Attachment 1 and Table 1. Note that an "H" appended to the Pro Forma identifier ("MLH" rather than "ML") indicates a hybrid alternative and a ".1" appended to a Pro Forma identifier ("EX8.1" rather than "EX8") indicates a modification to an original alternative generated from ideas arising during the screening.

All of the "Accepted" alternatives were ranked within their categories with regard to their robustness, technical maturity, and potential for implementation. The alternatives evaluated as having significantly more advantages were carried forward to the initial list. Each alternative was compared only to alternatives within its category and not to alternatives in other categories. *Table 5 is a listing of the outcome of the ranking process.* For alternatives included in the initial list, the ranking within the category is given. For alternatives not selected for further consideration, a ranking and brief comment is given.

INITIAL LIST

It is important to note that the initial list generated by the process described in this report is not "frozen" at the eighteen alternatives. As information from literature searches, professional and commercial inquiries and other submitted Pro-Formas becomes available, potential new alternatives will be screened by the process already described for addition to the list. Both the initial list and short list may be added to at any time up to completion of the final Team deliverable of the recommendation of the preferred alternative(s).

The following alternatives were accepted onto the "Initial List:"

Fractional Crystallization – DWPF Vitrification

The proposed process would selectively remove sodium and potassium salts from the dissolved salt / supernate feed by utilizing the solubility difference of the different salts in the neutralized waste stream. The cesium remains in the mother liquor and can be transferred to the DWPF.

Prior to the crystallization step, the salt solution feed is filtered to remove the sludge solids.The filtrate is acidified with nitric acid to convert OH^-, $CO_3^=$, and NO_2^- to NO_3^-. The acidified solution is next fed to a continuous crystallizer unit coupled to a filtering / separation device to separate the crystals from the mother liquor. The soluble radionuclides stay in the mother liquor, except for the fraction that remains occluded within the crystals or adheres to the surfaces. The mother liquor is sent directly to DWPF after pH adjustment, if necessary. The crystals are decontaminated by washing and are then dissolved and sent to Saltstone to produce a Class A waste.

Variations:

1) Batch crystallizer
2) Eliminate potassium separation

Merits:

1) No reagents added
2) Routine industrial non-radioactive operation

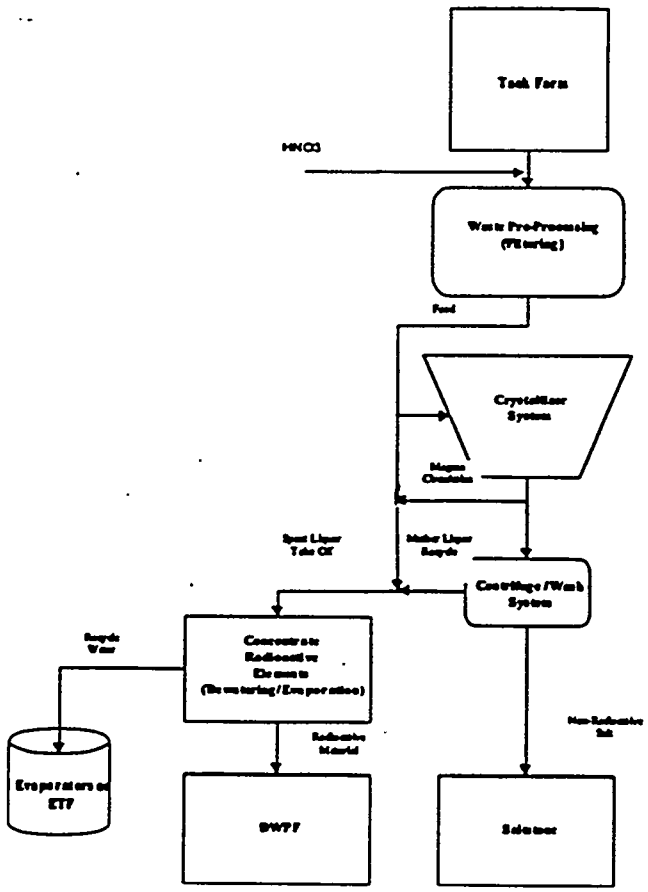

Electrochemical Separation and Destruction – DWPF Vitrification

In the proposed process, concentrated supernate and dissolved salt cake solution are treated with MST to reduce the concentration of soluble alpha activity and then filtered to remove entrained sludge solids. The filtrate is then processed in an electrochemical cell to convert nitrates and nitrites to hydroxides. Nitrogen, nitrous oxide and ammonia are generated and evolved as gases. The liquid exiting the electrolytic cell is next processed in a multistaged electrochemical membrane unit to produce a small volume of alkaline solution enriched in cesium and a large volume of caustic solution. It may be feasible to separate potassium in the form of potassium hydroxide from cesium in a separate electrochemical cell. At least a portion of the NaOH can be recycled to the tank farm. The remaining caustic stream would be grouted in the Saltstone facility. The Cs-enriched stream is evaporated to reduce the volume, overheads are processed through ETF and the bottoms are combined with sludge for vitrification in the DWPF.

The proposed process would include these steps: (1) combine concentrated supernate and dissolved salt cake solution and transfer the salt solution to a tank for treatment with MST to remove soluble alpha; (2) filter to remove entrained sludge solids and MST; (3) electrolyse filtered salt solution in an electrochemical unit to convert nitrate and nitrite salts to caustic; (4) process caustic solution in an multistage electromembrane unit to produce a small volume of solution enriched in Cs, a stream containing potassium hydroxide and a large volume of sodium hydroxide solution depleted in Cs; (5) recycle part or all of the sodium hydroxide to the tank farm; (6) Mix the remaining decontaminated sodium hydroxide solution with the potassium hydroxide solution and transfer to the Saltstone facility to make a Class A waste grout; (7) Evaporate Cs-rich caustic solution to reduce volume (overheads to ETF); (8) transfer evaporator bottoms for vitrification in DWPF.

Variations:
1) Consider Nafion™ membrane as well as ceramic membranes
2) Eliminate potassium separation
3) Consider electrodialysis for separation of the alkali materials

Merits:
1) Beneficial re-use of caustic
2) Reduced volume of glass

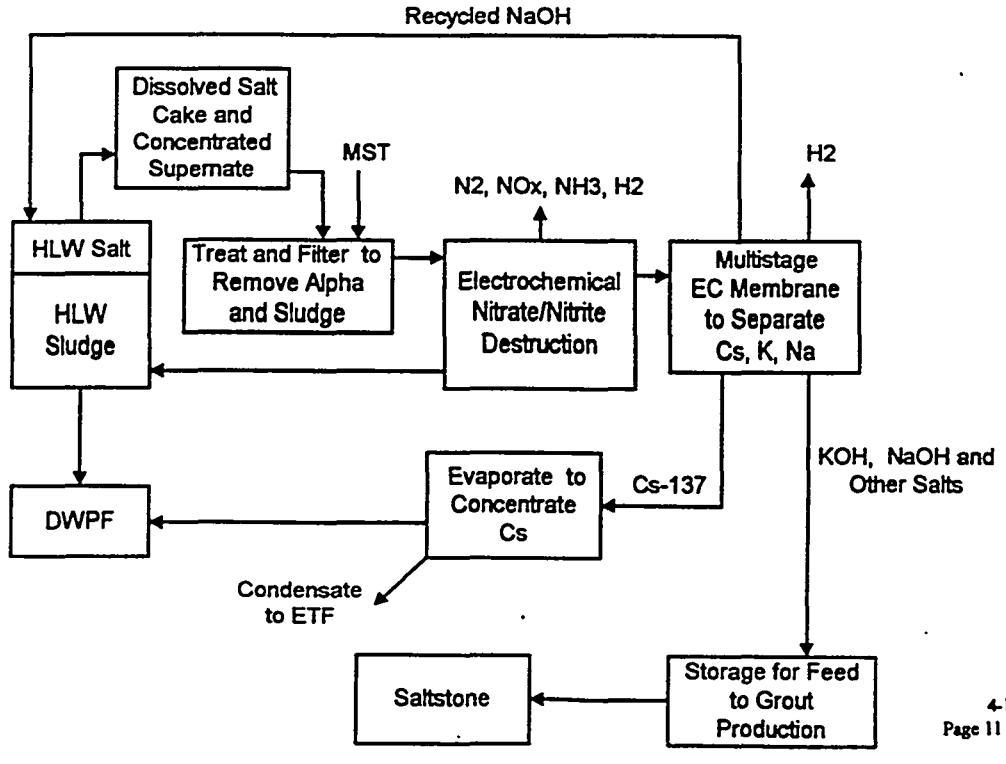

Elutable Ion Exchange – DWPF Vitrification

The proposed process would use two regenerable resins to remove Cs and Sr, Pu, U. The radionuclides would be eluted with 0.5 M nitric acid. If necessary, the dilute acid could be concentrated by evaporation. It would then be added to sludge in the DWPF. After treatment to remove Hg, the decontaminated salt solution would go to Saltstone Facility to be made into a Class A grout.

The process would include these steps: Filtration to remove sludge solids from the salt solution and prevent plugging of IX columns. The solids would be transferred to DWPF with the sludge stream. Then treatment in a crown-ether-based IX column(s) followed by treatment with an actinide resin to remove the Sr, Pu, U. The radionuclides would be eluted from both resins using a 0.5 M nitric acid solution. If necessary, an evaporator would be used to concentrate the eluate before transfer to the DWPF. Eventually the resin performance will degrade such that it must be replaced. The concentrated eluate would be transferred to the DWPF. Depending on the quantity of nitric acid in the eluate, some further chemical adjustments may be required for melter redox balance. The decontaminated salt solution would be transferred to Hg removal (GT73) and then to the Saltstone Facility to produce a Class A waste.

Variations:

1) MST addition in feed blending could be substituted for the Actinide resin column(s)
2) Resorcinol formaldehyde resin in place of crown-ether
2) Simulated moving bed in place of fixed column
3) Flat bed in place of fixed column

Merits:

1) Nitric acid eluate compatible with DWPF flowsheet
2) Reduced volume of glass based on potassium going to Saltstone
3) Eliminates DWPF Salt Cell operation

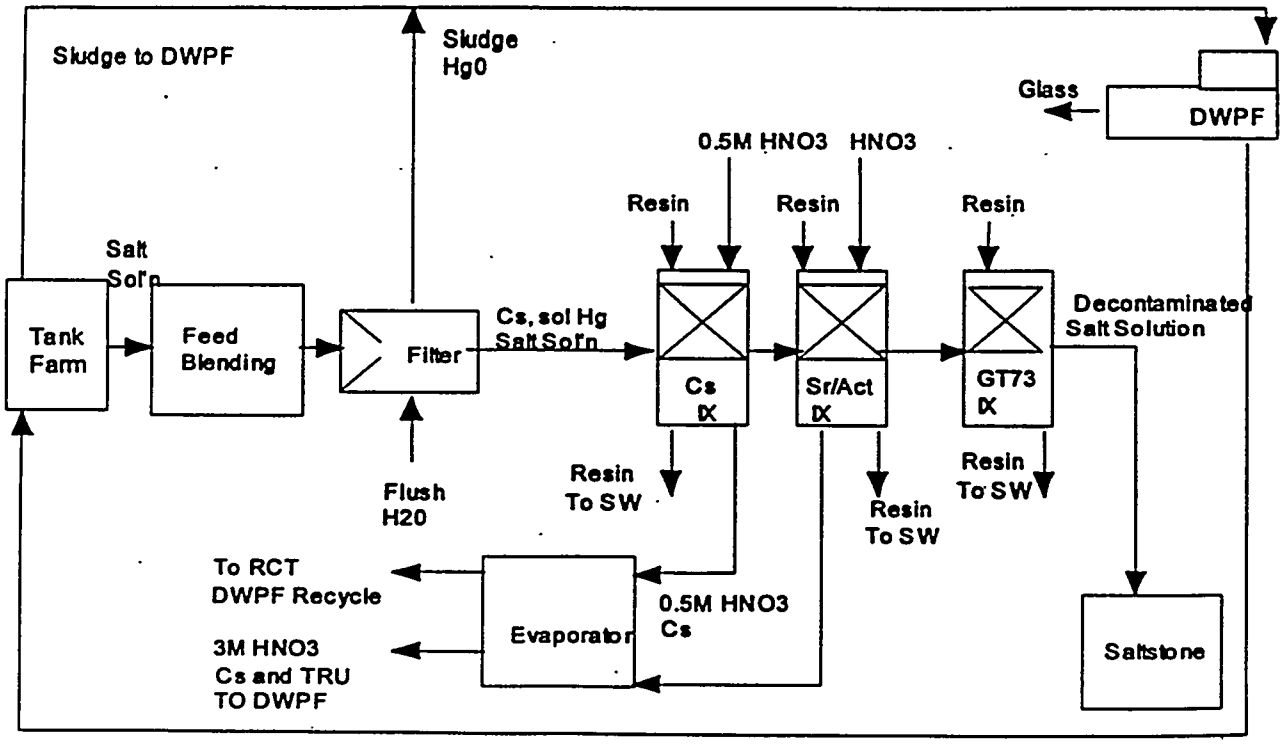

DWPF Recycle

Potassium Removal followed by TPB Precipitation

The proposed process would use a potassium-specific resin to remove most (~90%) of the potassium from salt solution prior to precipitation with TPB anion. This would drastically reduce the quantity of TPB used and delivered to the DWPF. Precipitation would occur in Tank 48 with concentration and washing as necessary. Decontaminated salt solution would be produced as in the current flowsheet and combined with the acidic eluate from the potassium removal resin.

The process would include these steps: Filtration to remove sludge solids from the salt solution and prevent plugging of the IX column. The solids would be transferred to DWPF with the sludge stream. Then treatment in an IX column to remove most of the potassium. The potassium would be eluted with nitric acid. Precipitation of the remaining potassium and Cs (and soluble Hg) with TPB anion in Tank 48. Add MST to Tank 48 to remove Sr, Pu, U. Concentration of the slurry producing decontaminated salt solution. The decontaminated salt solution would be combined with the potassium IX eluate, made caustic, and sent to Saltstone and disposed as Class A waste. Wash the precipitate as required to remove the required alkali and transfer to the DWPF.

Variations:

1) Send TPB directly to melter rather than Salt Cell
2) Simulated moving bed in place of fixed column
3) Flat bed in place of fixed column

Merits:

1) Approximately 10 fold reduction in organic inventory and benzene generation
2) Reduced volume of glass based on potassium going to the Saltstone Facility

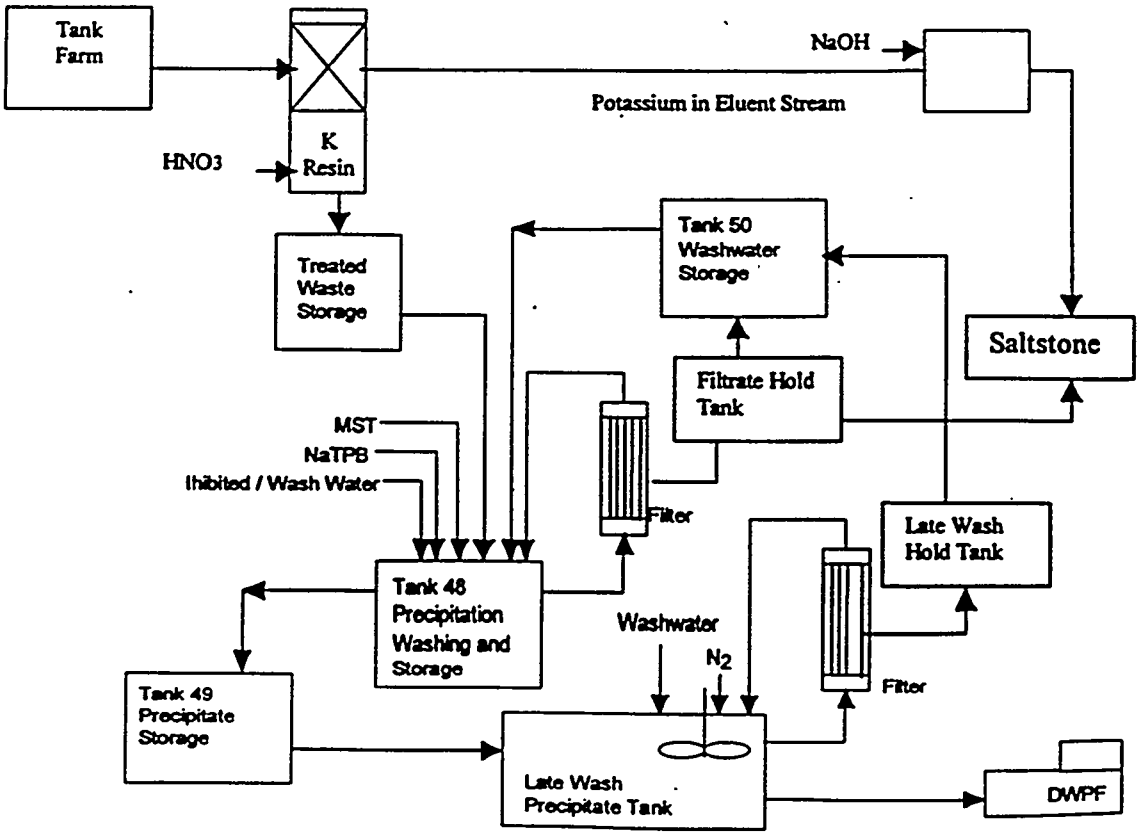

Acid-side Ion Exchange – DWPF Vitrification

There are several highly effective Cs ion exchange resins which can operate only in the acidic range to perform properly. The proposed process would acidify the salt solution stream so that an ammonium molybdophosphate on polyacrylonitrile resin can be used. The eluate or the loaded resin in the case non-elutable resin would be vitrified at the DWPF. The salt solution would go to the Saltstone Facility to be made into a Class A grout, after treatment to remove Hg.

The process would include these steps: Monosodium titanate (MST) addition to remove Sr, Pu, U. Filtration to remove sludge and MST solids from the salt solution and prevent plugging of the IX columns. Acidification with nitric acid. This step would require NOx abatement/scrubbing. The pH would be low enough that Al would not precipitate. Treatment in an IX column(s) using one of the acid-range resins. The decontaminated salt solution would be neutralized and go to the Saltstone Facility to be made into a Class A grout after treatment to remove Hg.

Variation:

1) Partially destroy nitrates electrochemically in place of caustic addition

Merit:

1) For elutable resin, reduced volume of glass based on potassium going to the Saltstone Facility

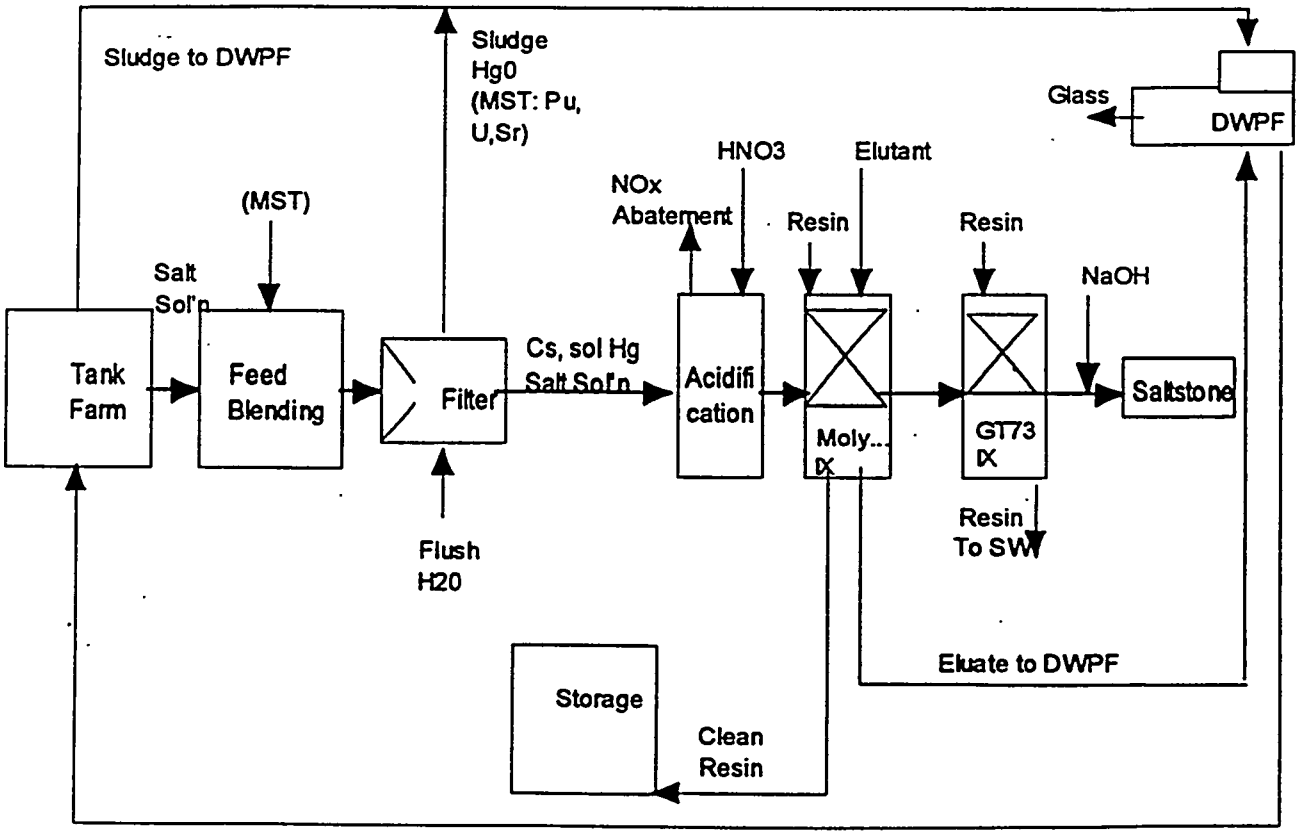

DWPF Recycle

Crystalline Silicotitanate (CST) Ion Exchange – DWPF Vitrification

The proposed process would employ the crystalline silicotitanate (CST) resin to remove Cs from the salt solution. There may also be some level of decontamination of Sr, Pu, and U from the salt solution. If Sr, Pu and U are not adequately removed, monosodium titanate (MST) could be added to sorb these radionuclides. Since the radionuclides cannot be eluted from the CST resin, the loaded resin would be transferred to the DWPF to be combined with sludge and frit to produce borosilicate glass. The decontaminated salt solution would go to the Saltstone Facility to be made into a Class A grout after treatment to remove Hg.

The process would include these steps: MST addition to remove Sr, Pu, U. Filtration to remove sludge and MST solids from the salt solution and prevent plugging of ion exchange (IX) columns. The solids would be transferred to DWPF via the sludge stream. Treatment in a CST IX column(s) with the Cs loaded CST (including Sr, Pu, U) slurried to the DWPF. The decontaminated salt solution would be transferred to Hg removal (GT73) and then to the Saltstone Facility to produce a Class A waste.

Variations:

1) A series of "batch & stir" CST removal steps (tanks) could be employed instead of the CST IX column(s).
2) The CST resin could be combined with the sludge stream instead of being fed in a separate stream.

Merits:

1) Non-hazardous inorganic reagent
2) High efficiency Cs removal
3) Direct incorporation of CST into glass minimizes waste volume relative to Zeolite
4) Eliminates DWPF salt cell operation
5) Reduced volume of glass based on potassium going to saltstone

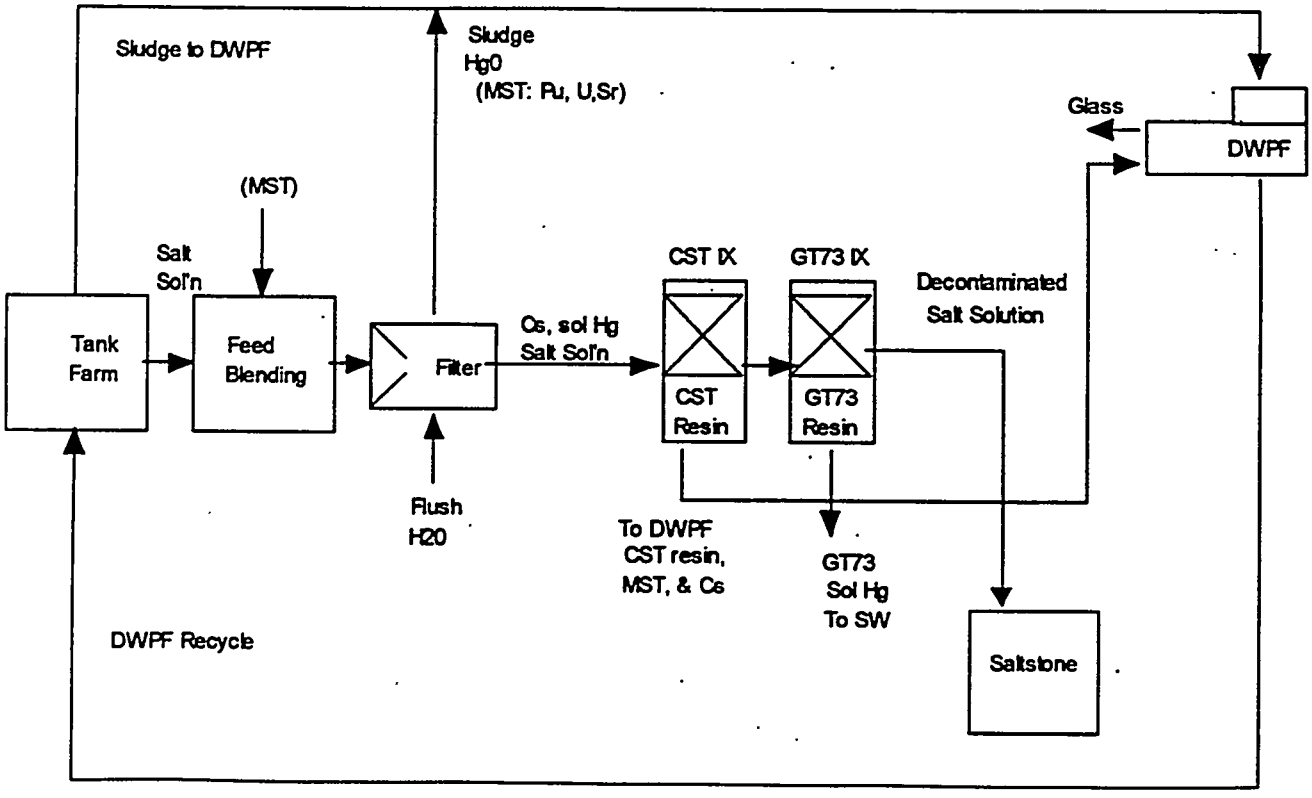

Crystalline Silicotitanate (CST) Ion Exchange – New Facility Vitrification

The proposed process would employ the crystalline silicotitanate (CST) resin to remove Cs from the salt solution. There may also be some level of decontamination of Sr, Pu, and U from the salt solution. If Sr, Pu and U are not adequately removed, monosodium titanate (MST) could be added to sorb these radionuclides. The Cs loaded resin would be vitrified into a very highly loaded CST/borosilicate glass (up to 60 wt% CST) in a separate facility thus achieving a very large volume reduction. This glass would be stored on-site until the Cs activity becomes negligible (~300 years). The decontaminated salt solution would go to the Saltstone Facility to be made into a Class A grout after treatment to remove Hg.

The process would include these steps: MST addition to remove Sr, Pu, U. Filtration to remove sludge and MST solids from the salt solution and prevent plugging of the IX columns. These solids would go to the DWPF via the sludge stream. Treatment in a CST IX column(s). The Cs loaded CST would be mixed with frit and fed to a new dedicated vitrification facility. The glass product would be stored in a shielded vault which could ultimately be closed when the Cs activity decayed sufficiently. The melter would require an offgas treatment system. The offgas condensate could be included with the DWPF recycle or go directly to the Tank Farm after caustic addition. The decontaminated salt solution would be transferred to Hg removal (GT73) and then to the Saltstone Facility to produce a Class A grout.

Variations:

1) A series of "batch & stir" CST removal steps (tanks) could be employed instead of the CST IX column(s).
2) The Cs loaded glass could be stored in DWPF type canisters in the GWSB.

Merits:

1) Non-hazardous inorganic reagent
2) High efficiency Cs removal
3) Minimal impact on current DWPF process and waste form
4) Reduced volume of glass based on potassium going to the Saltstone Facility

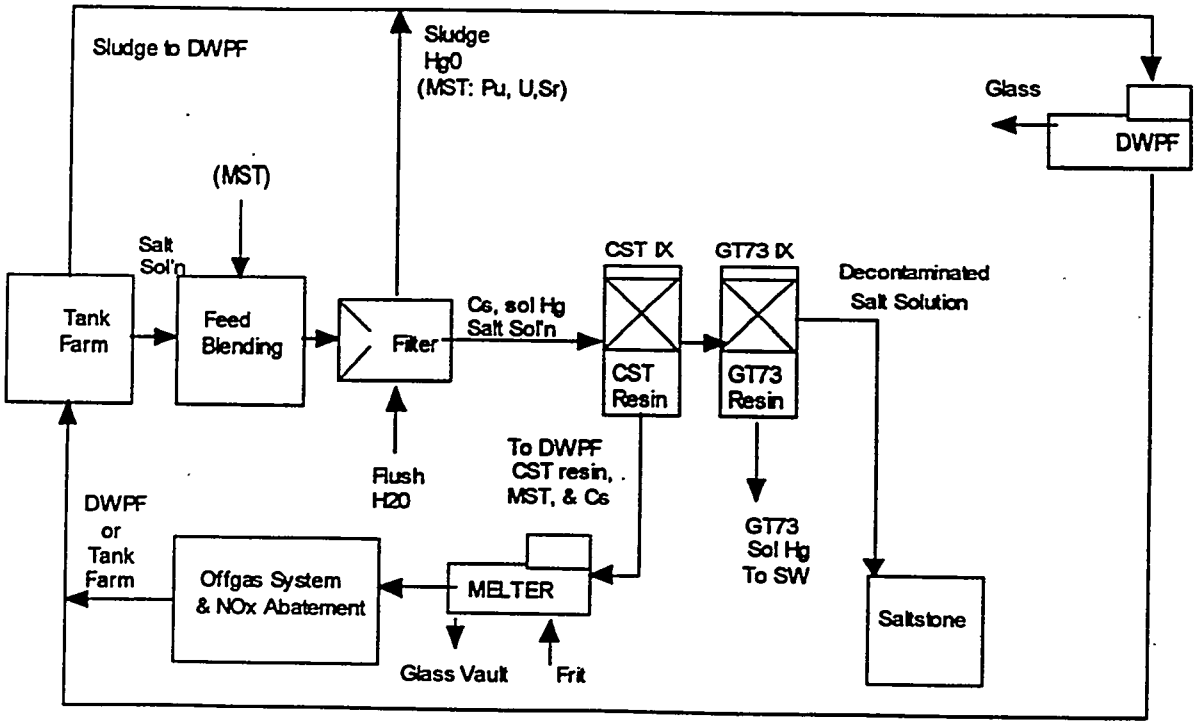

DWPF Recycle

Zeolite Ion Exchange - DWPF Vitrification

The proposed process would use a zeolite resin to remove Sr, Pu, U and a second zeolite resin to remove Cs from the salt solution. The radionuclides would be transferred to the DWPF on the zeolite resin where they would be combined with sludge and frit to produce borosilicate glass. The decontaminated salt solution would go to the Saltstone Facility to be made into a Class A grout after treatment to remove Hg.

The process would include these steps: Filtration to remove sludge solids from the salt solution and prevent plugging of IX columns. The solids would be transferred to the DWPF via the sludge stream. For zeolite resins to perform properly, the pH must be < 12. The next step is acid addition to lower the pH followed by filtration to remove precipitated Al and then by caustic addition to prevent post-precipitation of Al. The filtered Al is redissolved in caustic and added back into the salt solution stream after the zeolite columns. Next, the pH adjusted salt solution is treated in a zeolite, e.g. TIE-96 IX column(s) to remove Sr, Pu, U and then in a zeolite, e.g. IE-96 column(s) to remove Cs. The zeolites are slurried to the DWPF to be incorporated into the glass. Additional waste glass will be produced in the DWPF compared to the current flowsheet. The decontaminated salt solution would be transferred to Hg removal (GT73) and then to the Saltstone Facility to produce a Class A grout.

Variations:

1) MST addition to feed blending could be used instead of a zeolite column to remove Sr, Pu, U.
2) A "batch & stir" option could be employed; this would require either several stages to achieve adequate decontamination or re-permitting of Saltstone to Class B or C waste.
3) Add zeolite directly to salt solution in a blend tank and separate solids.

Merits:

1) Non-hazardous inorganic reagent
2) Full scale radioactive operation demonstrated at West Valley

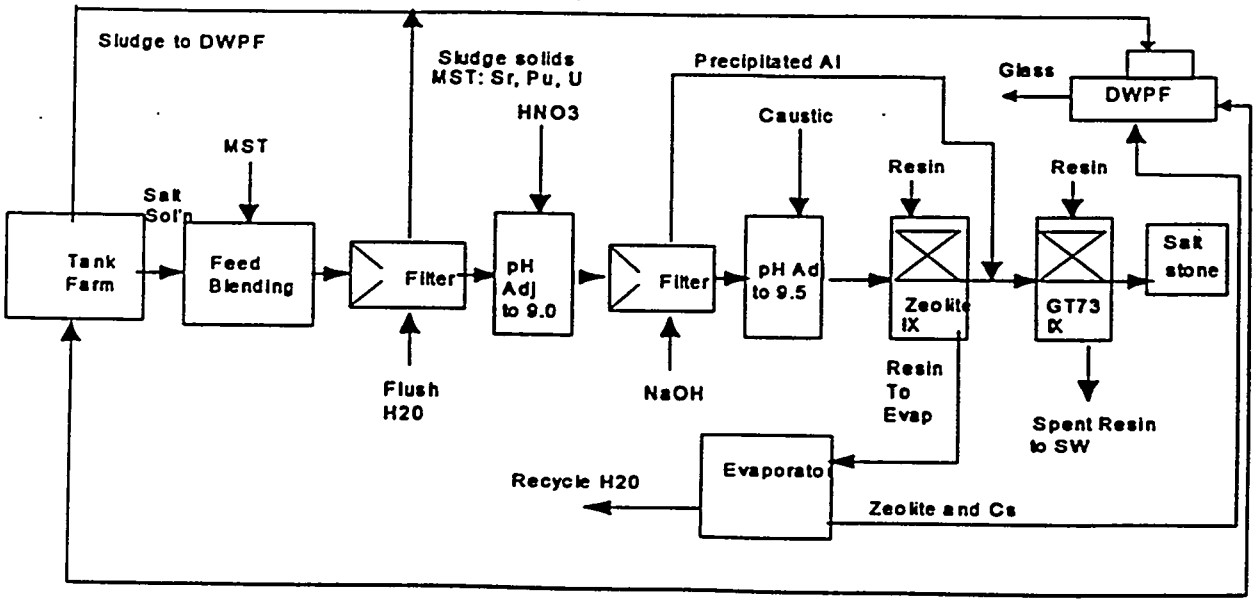

DWPF Recycle

Crystalline Silicotitanate (CST) Ion Exchange – Ceramic Waste Form

The proposed process would employ the crystalline silicotitanate (CST) resin to remove Cs from the salt solution. There may also be some level of decontamination of Sr, Pu, and U from the salt solution. If Sr, Pu and U are not adequately removed, monosodium titanate (MST) could be added to sorb these radionuclides. Filtered sludge and MST are sent to DWPF for vitrification. The Cs loaded resin would be immobilized into a durable, temperature tolerant ceramic waste form. This ceramic would be stored on-site until the Cs activity becomes negligible (~300 years). Removal of decay heat would be a key requirement during the early years of storage. The decontaminated salt solution would go to the Saltstone Facility to be made into a Class A grout after treatment to remove Hg.

Variations:

1) A series of "batch and stir" CST removal steps (tanks) could be employed instead of the CST IX column(s).
2) Other alternatives for resin storage are possible, e.g. make the ceramic in DWPF type canisters and store in GWSB until ready for disposal in a Federal repository.

Merits:

1) Non-hazardous inorganic reagent
2) High efficiency Cs removal
3) Minimal impact on current DWPF process and waste form
4) Potentially simpler and cheaper immobilization technology compared to vitrification

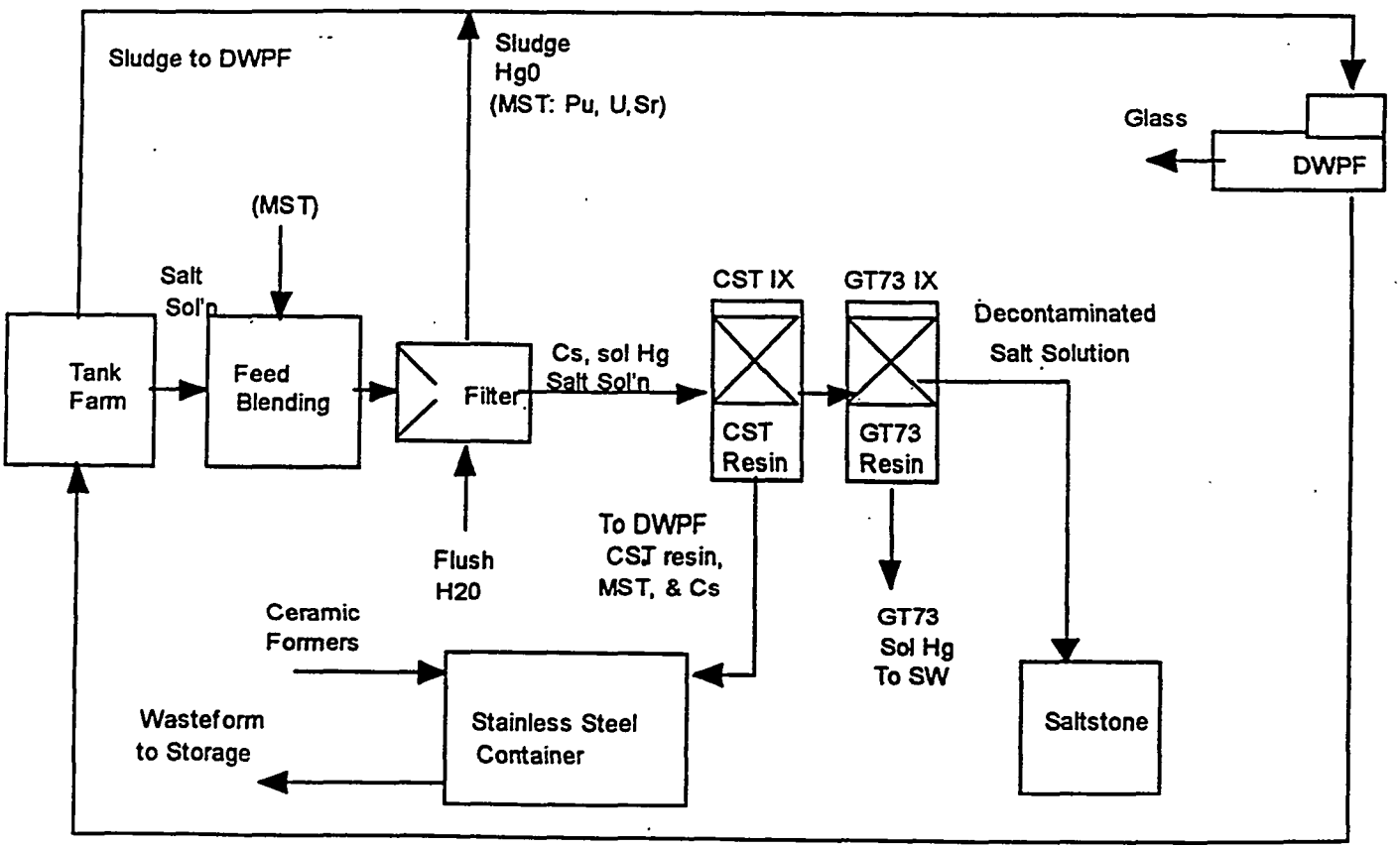

DWPF Recycle

Reduced Temperature ITP

The reduced temperature ITP option is a variation of the current ITP flowsheet. The plant configuration would remain the same except for the addition of cooling capabilities. The temperature of the TPB slurry and filtrate would be maintained below 25° C by use of chillers until transport to the DWPF salt cell or the Saltstone Facility, respectively. Reducing the temperature of the ITP process reduces the benzene generation rate to approximately the rate for radiolytic decomposition of TPB. Temperature control would need to be added to the following existing equipment and systems: Tank 48, Tank 49, Filtrate Hold Tanks in ITP, Tank 50, The Salt Solution Hold Tank in the Saltstone facility, and the Late Wash Precipitate Tank, Late Wash Hold Tank, and Low Point Pump Pit Precipitate Tank.

Variation:
1) None

Merits:
1) Minimal facility modifications
2) Minimal impact on current DWPF process and waste form

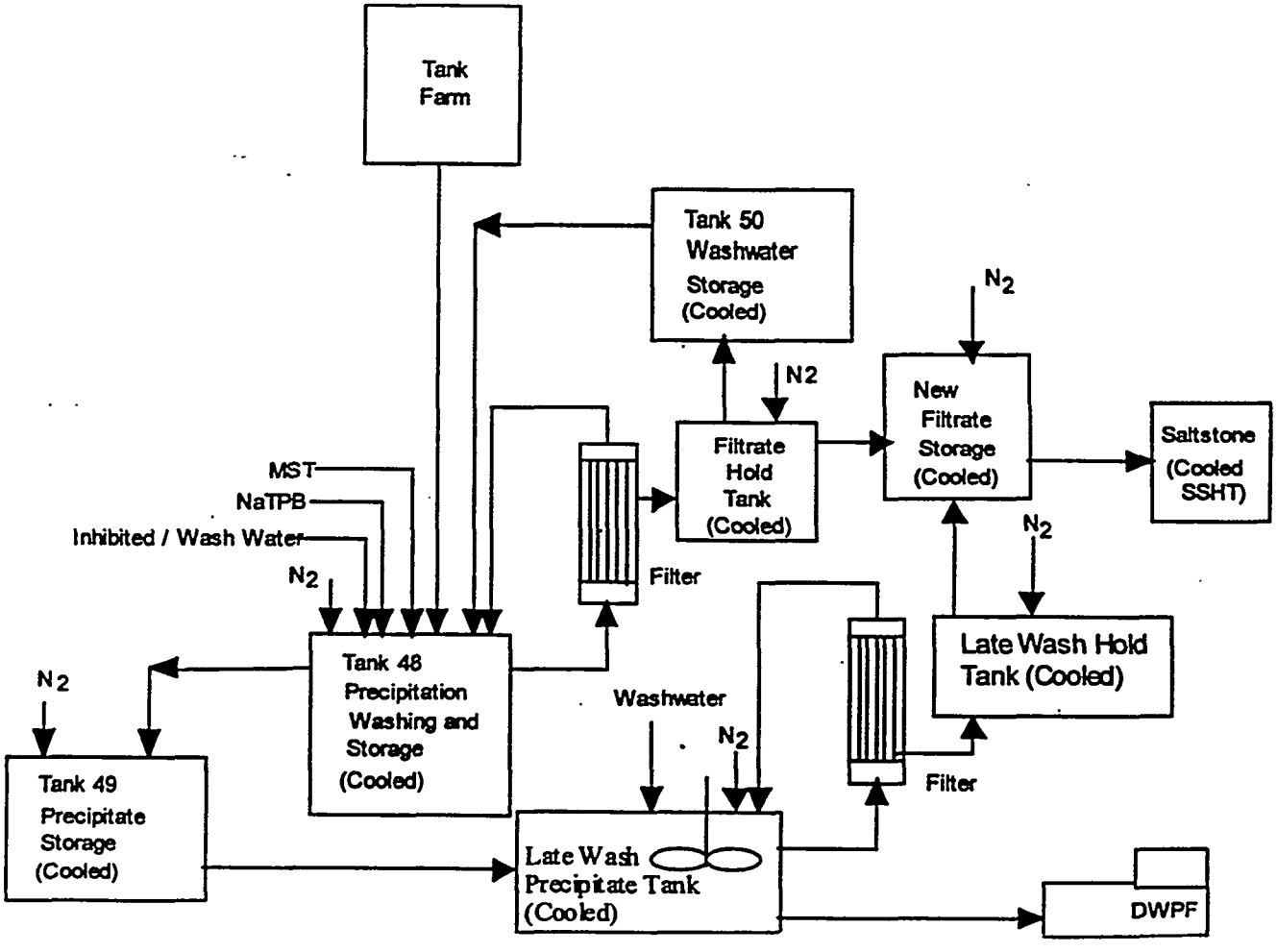

Catalyst Removal ITP

The catalyst removal ITP option will require an additional process step to the current ITP flowsheet for removal of both solid catalyst (entrained sludge) and soluble catalyst (metal ions in solution). A unit operation for filtering the sludge from the salt feed and a column for contacting the filtered salt solution with ferrous sulfide to remove any soluble catalyst will be used to prepare the salt solution for storage prior to processing in ITP. The removal of the catalyst from the ITP feed should reduce the benzene generation rate in the ITP process to approximately the radiolytic decomposition rate of TPB. The processing steps subsequent to this treatment will be the same as the existing ITP configuration.

Variations:

1) Use a flocculant to capture the catalyst particles
2) Use a flow through electrochemical cell to separate the catalyst

Merit:

1) Minimal impact on current DWPF process and waste form

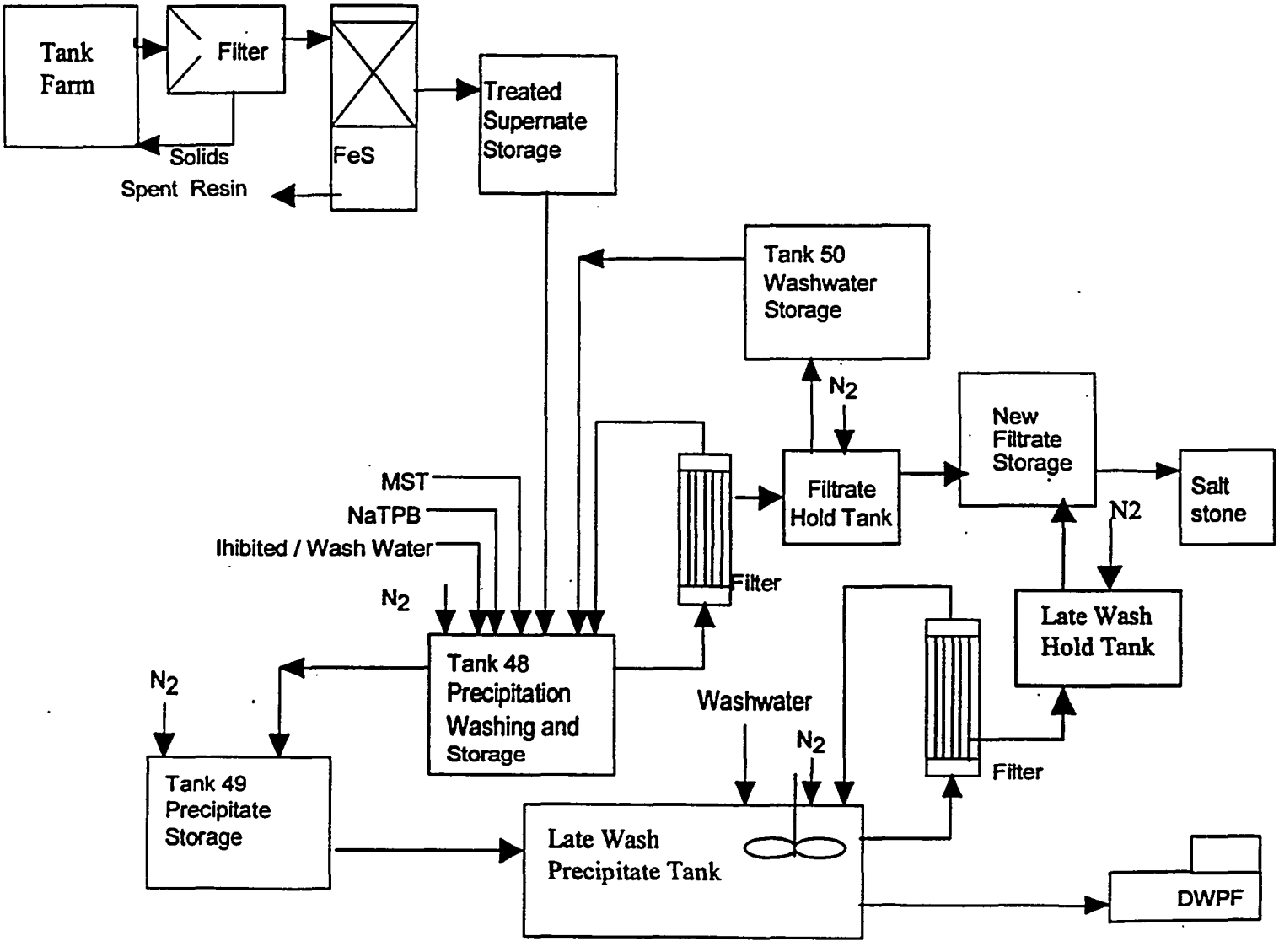

ITP with Enhanced Safety Features

The conceptual process is similar to the current ITP process. The modifications would compensate for Authorization Basis safety issues with Engineered Safety Features

For example, increased ventilation would increase the benzene generation rates that could be accepted during ITP and subsequent processing. This option would require upgrades to the safety systems and/or strategies for the following systems and equipment: Tank 48, Tank 49, Tank 50, ITP Filter Cell leak detection and ventilation, ITP Filtrate Hold Tanks, Salt Solution Hold Tank in Saltstone, Late Wash Filter Cell leak detection and ventilation, Late Wash Process Vessel Vent System, and the Late Wash Precipitate Tank, Late Wash Hold Tank, and Low Point Pump Pit Precipitate Tank. Late Wash Hold Tank and Low Point Pump Pit Precipitate Tank chillers would have to be added to reduce benzene emissions.

Variations:

1) Can be combined with reduced temperature and/or catalyst removal ITP
2) Air dilution while operating at positive pressure

Merit:

1) Minimal impact on current DWPF process and waste form

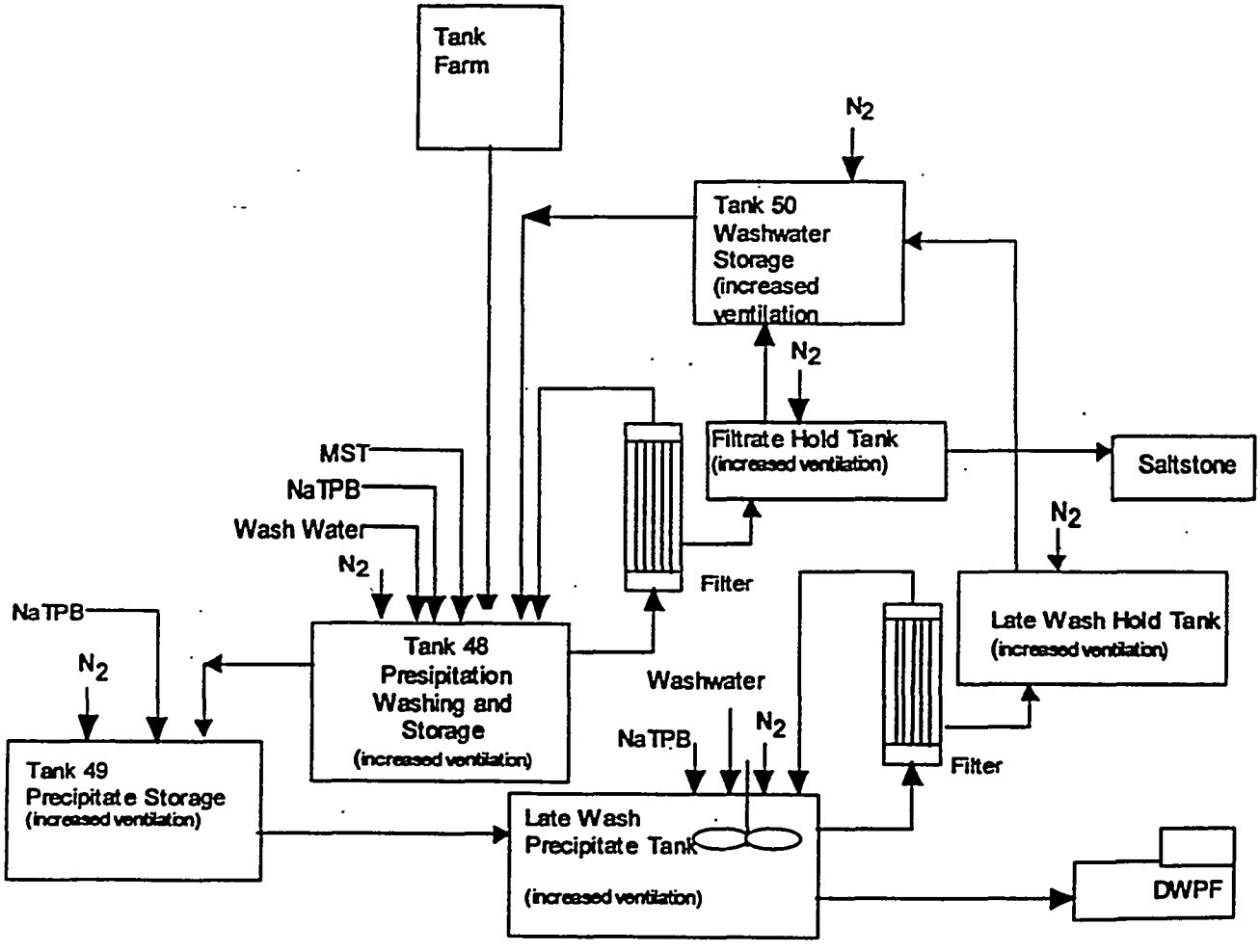

Small Tank TPB Precipitation

This option replaces batch precipitation in Tank 48 with continuous precipitation. This continuous precipitation unit operation could be a series of Continuous Stirred Tank Reactors (CSTRs). A stainless steel concentrate tank maintained at less than 25° C would follow the precipitation process. Existing filters could be used for this concentration operation. A washing facility would wash the slurry to meet DWPF nitrite requirements. The existing Late Wash Facility or a new facility/tank could be used for the washing operation. A filtrate storage facility would be required between the continuous precipitation facility and the Saltstone Facility.

Variations:

1) A catalyst removal head end process could be added to this option
2) Continuous precipitation could be performed in vortex mixers
3) Continuous precipitation could be performed in a single CSTR
4) Low rate injection of TPB to effect a 5X separation of cesium from potassium

Merits:

1) Reduced inventory of flammable material
2) Reduced cycle time, improved mixing and cooling reduces benzene generation
3) Eliminates the need for a second wash at Late Wash

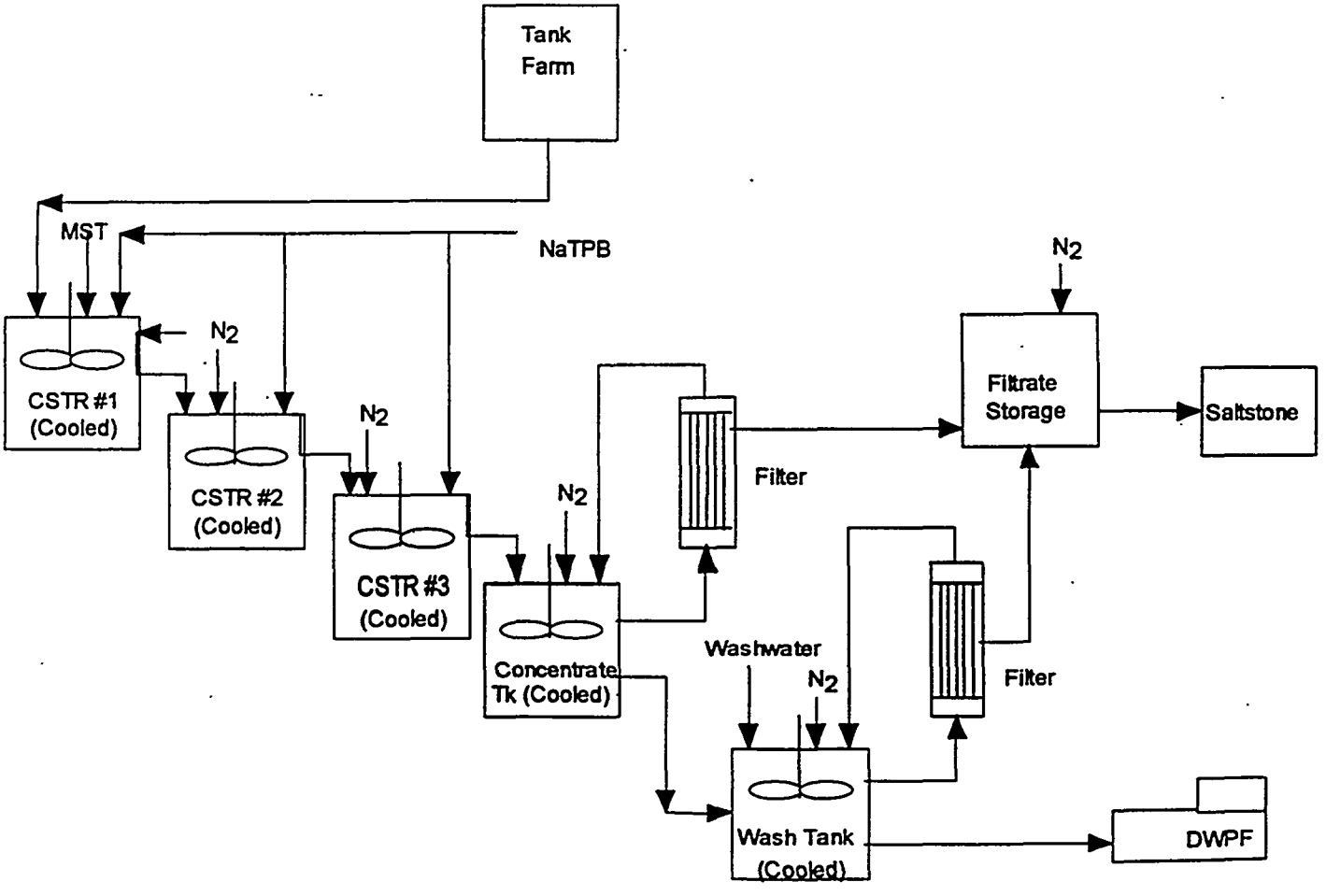

Caustic Side Solvent Extraction

The basic principle of solvent extraction (liquid-liquid extraction) is to use a sparingly soluble diluent material that carries an extractant that will complex with cesium ions in the caustic solution. The separated cesium can then be stripped back into an aqueous phase ready for transfer to the DWPF. The solvent is contacted in a countercurrent fashion with the caustic waste solution (in the Extraction Stages). Following cesium extraction, the solvent is scrubbed with dilute caustic to remove other salts from the solvent stream (in the Scrub Stages). The solvent is then contacted in a countercurrent flow with a dilute acid stream to transfer cesium to the acid stream (in the Strip Stages). The solvent will then need to be scrubbed or purged to remove degradation products prior to recycling to the front of the process. The other two resultant streams are a raffinate stream depleted of cesium and a strip effluent containing the separated cesium ions.

The proposed process has the following characteristics: a) the feed solution will be clarified prior to solvent extraction, probably through a filtration process that returns the solid phase to the Tank Farm, b) 8 extraction stages, 2 scrub stages and 10 strip stages using an appropriate diluent (e.g., Isopar) and extractant (e.g., a crown ether), c) this process will likely provide only a 3 fold increase in cesium ion concentration. Additional concentration of effluent could be achieved through evaporation or through the use of additional strip stages, d) the raffinate stream will likely contain at least trace concentrations of both the organic solvent and its degradation products, these organics may require removal to meet Saltstone feed requirements, e) an additional Hg removal stage would be required for some tank wastes, f) if an evaporator is employed to concentrate the strip effluent, the overheads may require organic removal prior to transfer to ETF, g) the solvent extraction process may not remove actinides, in which case the addition of monosodium titanate to the waste prior to filtration could be employed, h) this process would likely use centrifugal contactors to provide each extraction stage.

Variation:

1) TRU ion exchange resin in place of MST

Merits:

1) Acidic cesium waste stream is compatible with DWPF
2) Reduced volume of glass based on potassium going to Saltstone
3) Potential use of existing solvent extraction canyons
4) Solvent extraction is widely used commercially in high radiation environments throughout the world

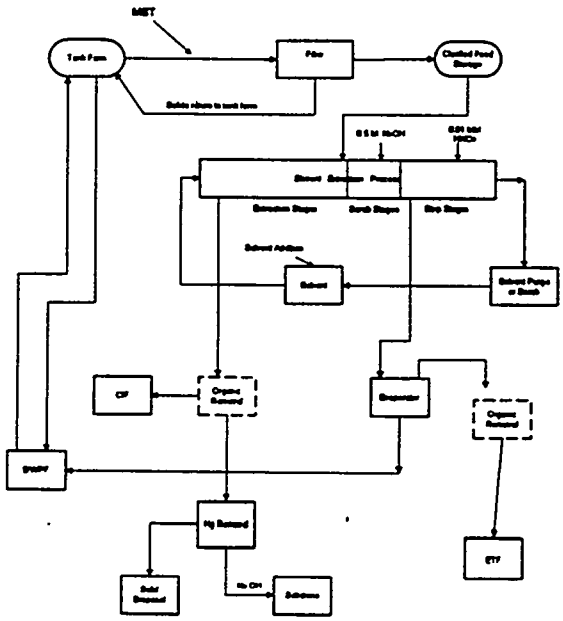

Acid Side Solvent Extraction

The basic principle of solvent extraction (liquid-liquid extraction) is to use a sparingly soluble diluent material that carries an extractant that will complex with cesium ions in an acid solution. The separated cesium can then be stripped back into aqueous phase ready for transfer to the DWPF. The solvent is contacted in a countercurrent fashion with the acidic waste solution (in the Extraction Stages). Following cesium extraction, the solvent is scrubbed with dilute caustic to remove other salts from the solvent stream (in the Scrub Stages). The solvent is then contacted in a countercurrent flow with a concentrated acid stream to transfer the cesium to the acid stream (in the Strip Stages). The solvent will then need to be scrubbed or purged to remove degradation products prior to recycling to the front of the process. The other two resultant streams are a raffinate stream depleted of cesium and a strip effluent containing the separated cesium ions.

The proposed process has the following characteristics: a) the feed solution will be clarified prior to solvent extraction, probably through a filtration process that returns the solid phase to the Tank Farm, b) acidification of the waste will result in significant NOx production, c) 3 extraction stages, 1 scrub stage and 3 strip stages using an appropriate diluent (e.g., Nitrobenzene) and extractant (e.g., cobalt dicarbolide), d) the raffinate stream will likely contain at least trace concentrations of both the organic solvent and its degradation products, these organics may require removal to meet Saltstone feed requirements, e) an additional Hg removal stage would be required for some tank wastes, f) the use of large quantities of acid to strip the diluent may result in a redox imbalance in the melter requiring additional chemicals, g) the solvent extraction process may not remove actinides, in which case the addition of monosodium titanate to the waste prior to filtration could be employed.

Variations:

1) Calixorene crown ether is an alternative extractant
2) Replace MST with phosphine oxide extractant

Merits:

1) Full scale radioactive operations in Russia (cobalt dicarbolide)
2) Reduced volume of glass based on potassium going to Saltstone
3) Potential use of existing solvent extraction canyons

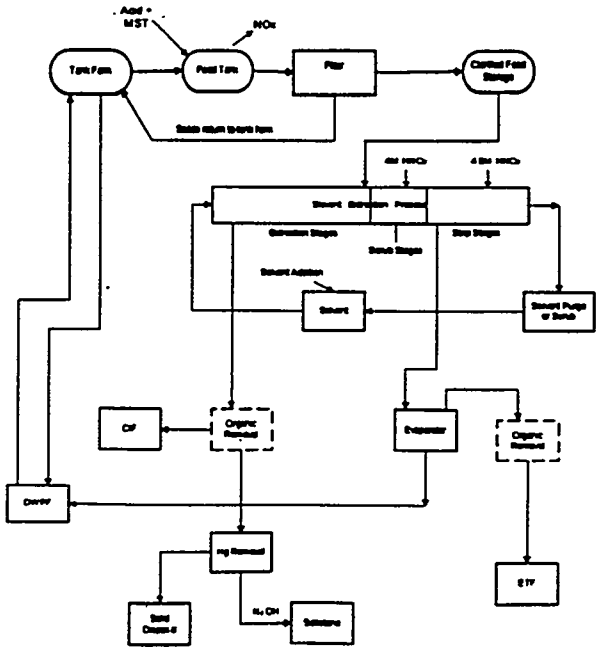

Direct Vitrification

The proposed process will vitrify the entire inventory of salt waste, after pre-treatment to remove U, Pu, and Sr. The essential ideas are (1) the final waste form can be stored on-site (2) the waste form does not need to be as durable as the canistered waste form going to the Federal repository. A new glass formulation would be developed to increase loading at the required leach rate. The glass would be innocuous in about 300 years, so the storage method and waste form would be designed to limit the leaching of the glass for the above period. Removal of decay heat would be a key requirement in the early years of storage.

The salt solution is received into a HLW tank and treated with monosodium titanate to remove soluble uranium, plutonium and strontium. The solids from this step plus residual sludge solids are periodically transferred to the sludge feed stream for DWPF. The salt solution is filtered and the filtrate fed to the cesium vitrification facility. The salt solution is blended with glass forming chemicals and fed to a glass melter. The glass melt is cast into a container which is sealed and transferred to an on-site location for final disposition.

Variation:
1) None

Merits:
1) Minimal changes to DWPF sludge flowsheet
2) No hazardous reagents added

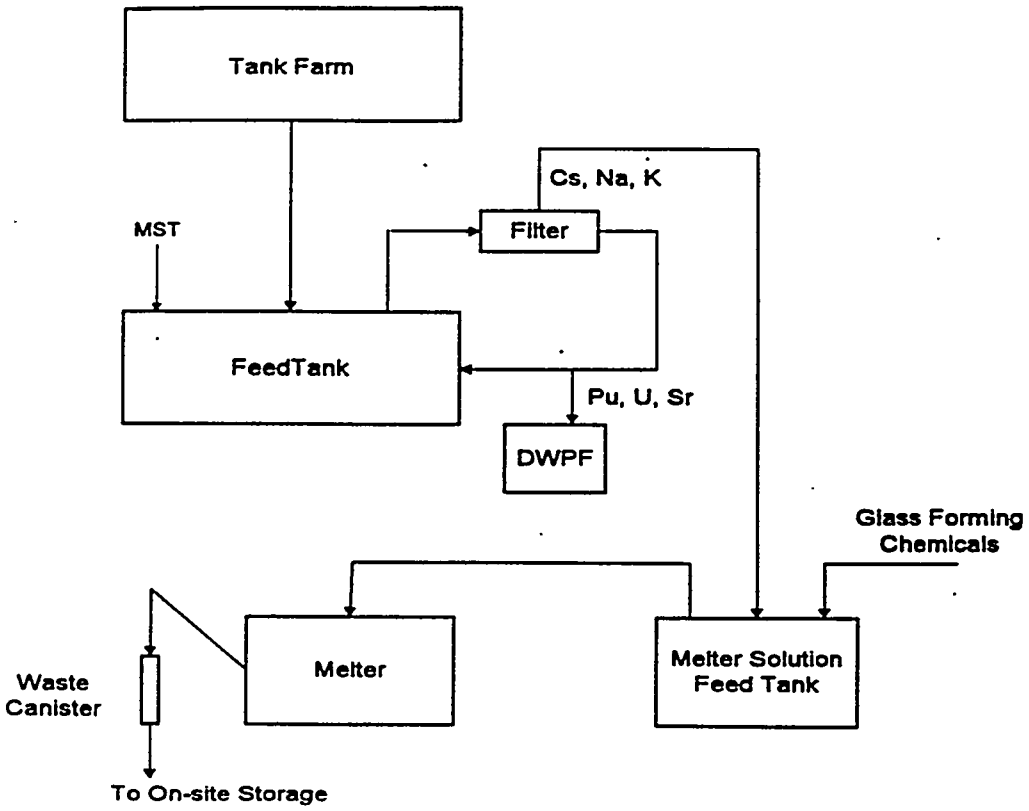

Supernate Separation – DWPF Vitrification

In the proposed process, the concentrated supernatant liquid (free and interstitial liquor in saltcake) would be separated and transferred directly to the DWPF and vitrified with sludge waste. Sludge actinides do not need to be removed from the concentrated supernate. The salt cake will be dissolved and transferred to the Saltstone Facility for vault disposal. The vaults presently used in the Saltstone Facility meet current regulations for NRC Class C disposal, although the current permit restricts the average Ci content in a disposal unit (cell) to be within NRC Class A limits for disposed saltstone. Treatment of salt solution from salt cake is required to remove entrained sludge and Hg so that soluble alpha activity is no greater than 100 nCi/g and Hg concentration is less than 260 mg/l in the final waste. Substantial shielding must be added to the Saltstone facilities.

Unit operations for the proposed process would include the following steps: (1) separate and transfer concentrated supernatant from salt tanks, which would contain at least 90% of Cs-137 in inventory, into a single tank for feed to DWPF; (2) dissolve residual salt cake and transfer the salt solution to a tank; (3) treat dissolved saltcake solution with MST to reduce Sr, Pu, and U; (4) filter to remove insoluble solids; (5) transfer salt solution from filtrate storage tank to Hg removal (GT73); (6) transfer salt solution to grout production unit in a shielded facility.

Variation:

1) Build a new shielded grout production facility

Merits:

1) Simplicity – no separation process
2) No hazardous materials added

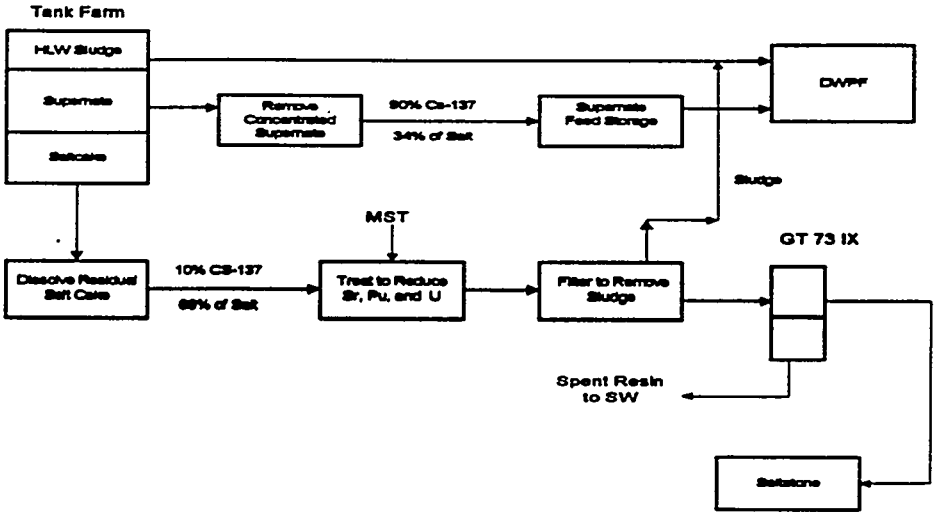

Direct Disposal as Grout

In the proposed process, Cs-137 is not separated from the salt waste or concentrated supernate. All soluble waste is sent to the Saltstone facility. The saltstone waste form generated from dissolved saltcake solution must meet NRC Class C LLW disposal requirements for near-surface disposal. The vaults presently used in the Saltstone facility meet current regulations for NRC Class C disposal, although the current permit restricts the average Ci content in a disposal unit (cell) to be within NRC Class A limits for disposed saltstone. Treatment of salt solution is required to remove entrained sludge and Hg so that soluble alpha activity is no greater than 100 nCi/g and Hg concentration is less than 260 mg/l in the final waste form. At the projected maximum concentration of Cs-137, a new grout production facility within a new shielded cell containing grout production equipment modified to enable remote maintenance capability would need to be constructed.

The proposed process would include these steps: (1) combine concentrated supernate and dissolved salt cake solution and transfer the salt solution to a tank for treatment to remove soluble alpha; (2) treat salt solution with MST to reduce Sr, Pu, and U; (3) filter to remove entrained sludge solids and MST; (4) transfer filtered salt solution to the new grout production facility.

Variation:

1) Use a temperature-tolerant ceramic waste form in place of grout

Merits:

1) Simplicity – no separation process
2) No hazardous materials added
3) Reduced volume of glass

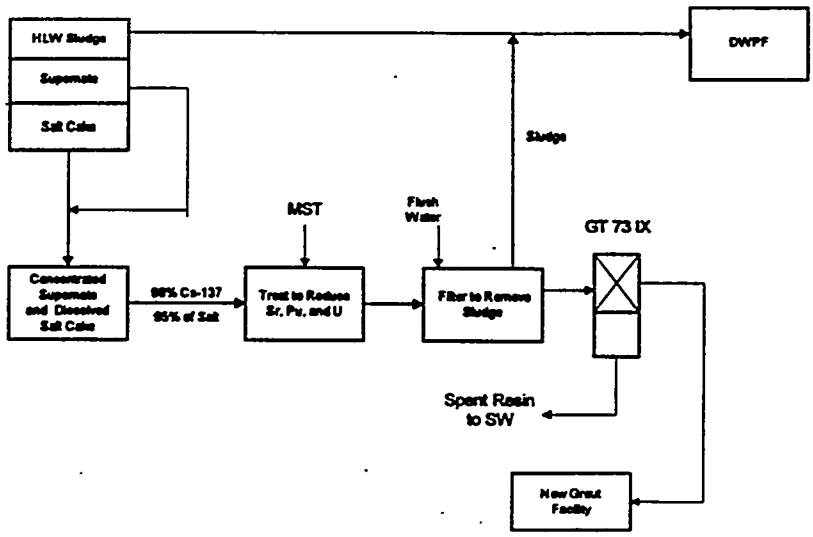

REFERENCES, ATTACHMENTS AND TABLES

References

1 Charter for the SRS HLW Salt Disposition Systems Engineering Team
2 Pre-conceptual - Phase I, Initial Design Input
3 WSRC-RP-9800163, Systems Engineering Management Plan
4 Position Paper on Identifying Alternatives to the In-Tank Precipitation Process

Tables

1 Inclusive Summary of Pro-Formas

2 Summary of Alternatives Accepted for Ranking

3 Summary of Alternatives Not Selected

4 Alternatives for Hybrid Consideration

5 Ranking Within Categories of Accepted Alternatives

Attachment

1 Original Pro-Formas

Table 1 – Inclusive Summary of Pro-Formas

Alternative #/Title	Disposition	Comments
GL1 – Bedrock storage	Reject-Safety 1b, Does not meet final disposal form for the salt. Reject-Schedule 2b, change in Federal law	
GL2 - Nevada disposition of waste materials	Reject-Safety 1a, International treaty for bomb testing	
GL3 – Geochemical injection followed by in situ vitrification	Reject-Safety 1c, generation of explosive hazards	
SE1 - Hollow fiber extraction	Reject-Safety 1b, No final disposal form Reject-Schedule 2b, Small scale application currently in use Reject-Process 5d, Immature for specific application on HLW tanks	
SE2 - Removal of Cs from acidic wastes via solvent extraction	Disposition included under SE4	
SE3 - Cs solvent extraction, caustic side process	ACCEPT	
SE4 - Removal of Cs from acidic wastes by solvent extraction	ACCEPT	
SE5 - Cs removal by solvent extraction	Disposition included under SE4	
SE6 - Removal of Cs from acidic wastes via solvent extraction	Disposition included under SE4	
CR1 - Crystallize sodium nitrate, then send liquid to DWPF	Disposition included under CR2 & CR5	

Alternative #/Title	Disposition	Comments
CR2 – Salt washing/fractional crystallization	ACCEPT	
CR3 – Salt separation by fractional crystallization	ACCEPT	with positive attributes (total waste generation)
CR4 – Salt separation by fractional crystallization	Disposition included under CR3	
CR5 – Selective fractional crystallization of salts	ACCEPT	
EC1 – Electrochemical destruction of nitrates and nitrites combined with sodium hydroxide recycle	ACCEPT	
EC2 - Cs separation by a multi-staged electrochemical membrane process	Disposition included under EC4	
EC3 – Electro-dialysis	Disposition included under EC4	
EC4 – Electro-chemical separation of salts	ACCEPT	with positive attributes (total waste reduction)
EC5 – Electrolytic separation of Na from everything else	Disposition included under EC4.	
VT1 – Vitrify salt in situ	Reject-Safety 1c, Volatile off-gases, no containment Reject-Safety 1b, Does not meet final disposal form for the salt Reject-Process 5d, In tank melter operation, electrode concept	

Alternative #/Title	Disposition	Comments
VT2 - Vitrification of salt waste	ACCEPT	
VT3 - Direct feed to DWPF	Reject-Schedule 2b, Large volume increase in DWPF waste form	
VT4 - Feed the whole dewatered wastes into melter	Reject-Schedule 2b, Large volume increase in DWPF waste form	
VT5 - Wash and direct feed to DWPF	Reject-Schedule 2b, Large volume increase in DWPF waste form	
VT6 - No pre-treatment: direct vitrification of all liquid waste	Reject-Schedule 2b, Large volume increase in DWPF waste form	
ML1 - Dewater salt tanks and build additional tanks	Reject-Safety 1b, Does not meet final disposal form for the salt.	
ML2 - Calcine salt and store calcine	Reject-Safety 1b, Does not meet final disposal form for the salt.	Hybrid rejected based oncalcine not viable for high Na solutions.
ML3 - Cs encapsulation in solid foam	Reject-Safety 1b, Does not meet final disposal form for the salt.. Reject-Schedule 2a, No volume reduction. Reject-Schedule 2b, No volume reduction	
ML4 - Class C Saltstone	Reject-Science 4b, Needs to be combined with separation process	Hybrid disposition included under ML7.1
ML5 - Cs accumulating bacteria on a fiber matrix	Reject-Science 4b, Theoretical application only, lack of radiochemical application. Reject-Process 5d, Inadequate eng basis.	

Alternative #/Title	Disposition	Comments
ML6 - KBI centrifugal bioreactor technology (CBR)	Reject-Science 4b, Theoretical application only and no micro-organisms identified for Cs. Reject-Safety 1b, Does not meet final disposal form.	
ML7 – Grout disposal of salt solution containing Cs 137 in Saltstone	Reject-Safety 1b, Does not meet final disposal form.	Hybrid to address waste form, – renumber as ML7.1
ML7.1 - Disposal of salt solution containing Cs 137.	ACCEPT	including requirements to meet Class C Cs loading if saltstone is used
ML8 - Interstitial fluid displacement for preferential recovery of Cs from saltcake	Reject-Safety 1b, Does not meet final disposal form. Reject-Science 4b, Inadequate basis. Reject-Process 5d, Inadequate eng basis.	
ML9 - Salt dehydration and encapsulation.	Reject-Safety 1b, Does not meet final disposal form.	Hybrid to add TRU to WIPP, renumber as ML9.1
ML9.1 - Salt dehydration and encapsulation with TRU going to WIPP	ACCEPT	
ML10 - In situ grouting of salt within the HLW tanks	Reject-Schedule 2b, Need for additional tanks to support current missions Reject-Process 5a1, Space availability	Need to check volume reduction /increase from grouting. Hybrid disposition included under ML7.1
ML11 - Bio-denitrification in large tanks	Reject-Science 4b, Availability of biological agent Reject-Process 5d, Engineering maturity for Process scale & material	Hybrid rejected based on no benefit from this denitrification approach even considered with other technology
ML12 - Direct processing of interstitial liquid from crystallized salt solutions	ACCEPT	No restriction from DF requirement
ML13 – Grout the salt solution in a purpose built facility without worrying about separating the Cs-137, etc.	ACCEPT	

Alternative #/Title	Disposition	Comments
MLH1 – Sodium Titinate for Pu & Sr, salt and liquor separation, some form of salt disposition and liquor to DWPF	ACCEPT	Need to assess Hybrid combination of Alt's ML1, ML8, ML9, ML11, ML12.
PI1 - Inorganic precipitating agent for Cs	Reject-Science 4b, lab scale proof-of-concept starting	Hybrid rejected based on having no agent identified.
PI2 - Cobalt dicarborane (a quasi-inorganic precipitate)	Reject-Safety 1c, Hydrogen evolution from radiolytic & temperature decomposition Reject-Science 4b, lab scale testing complete, no further work performed	Hybrid rejected based on evaluation wrt combining with solvent extraction considered not viable based on chemical instability
PI3 - Strontium precipitation through isotopic dilution	Reject-Safety 1b, Does not address final waste form	Hybrid rejected based on Na Titinate being the preferred removal agent
PI4 - Precipitation of Cs aluminosilicate from dissolved salt solution	Reject-Science 4b, maturity and uncertain kinetics	
EX1 - 1976 Flowsheet - elutable ion exchage	Reject-Schedule 2b, Construction of a large canyon facility would result in DWPF rate to exceed peak capacity, assumption made that new facility would start feeding DWPF in 10 years	Hybrid rejected based on phenol sulphonic being an older resin and current resins deemed better options (eg superlig, RF).
EX2 - Regenerable ion exchange	Disposition included under EX12	
EX3 - HLW salt disposition via NMS&S canyons using ion exchange process	Disposition included under EX12	
EX4 - Continuous ion exchange via a simulated moving bed	Reject-Safety 1b, Does not meet final permittable waste form, an incomplete process	Hybrid disposition included under EX12
EX5 - Ion exchange in a membrane	Reject-Safety 1b, Does not meet final permittable waste form, an incomplete process Reject-Process 5d, inadequateeng. maturity for process scale and material	Hybrid disposition included under EX12

Alternative #/Title	Disposition	Comments
EX6 – Sodium Titanate with elutable I/X resin	Disposition included under EX12	
EX7 – Electrically switched I/X	Disposition included under EX10	
EX8 – Potassium removal followed by TPB precipitation	Disposition included under EX8.1	Modify for potassium disposition – renumber as EX8.1
EX8.1 – Potassium to saltstone, followed by TPB precipitation	ACCEPT	Use ion exchange for K removal
EX9 - Cs eluate immobilization using CST	Reject-Safety 1b, Not permittable as written	Hybrid rejected based on consideration of WIPP not viable
EX10 – Electrically switched ion-exchange	ACCEPT	
EX11 – Electrochemical ion-exchange	Reject-Safety 1b, no permittable final disposal form.	Hybrid rejected based on acid eluation preferred and developmental only concept
EX12 – Actinide and Cs separations using regenerable superlig and IX materials	ACCEPT	positive attributes - nitric acid / SRAT process enhancement / reduced eluate volume
EX13 – Electrically switched ion exchange	Disposition included under EX10	
EX14 – Alternate the pH so you can use other IX materials	Disposition included under NX11	

Alternative #/Title	Disposition	Comments
EX15 – Elutable IX	Disposition included under EX12	
NX1 - In-tank sorption	Disposition included under NX9	
NX2 - Non-regenerable ion exchange	Disposition included under NX13	
NX3 - CST	Disposition included under NX13	
NX4 - CST, with CST as permanent storage medium	Disposition included under NX7	
NX5 - Cesium removal by counter current processing with CST	ACCEPT	
NX6 - Crowns	Disposition included under EX12	
NX7 - CST Ion exchange: storage of loaded CST	Disposition included under NX18.1.	
NX8 - CST Batch mixing: vitrification or storage of loaded CST	Disposition included under NX18.1 and NX13	
NX9 - Zeolite ion exchange: vitrification	ACCEPT	

Alternative #/Title	Disposition	Comments
NX10 - CST ion exchange: vitrification	Disposition included under NX13 and NX14	
NX11 - Acid side ion exchange	ACCEPT	
NX12 - Magnetic separation using Cs specific media	Reject-Process 5d, poor commercial experience with Exxon	
NX13 - CST ion exchange: coupled flowsheet	ACCEPT	
NX14 - CST ion exchange: parallel flowsheet	ACCEPT	
NX15 - Replace one or both filters with ion-exchange resin beds	Disposition included under NX13	
NX16 - Ion exchange on glass matrix	ACCEPT	
NX17 - In-riser ion exchange direct disposal process option	Disposition included under NX18.1	
NX18 - Cs removal with CST and storage in stainless steel tank	Reject-Safety 1b, no permittable final waste form.	Hybrid to address waste form and renumber as NX18.1
NX18.1 – CST for Cs removal and temperature tolerant waste form	ACCEPT	

Alternative #/Title	Disposition	Comments
NX19 - In-tank separation with CST using the Magnetically Assisted Chemical Separation (MACS) process	Reject-Process 5d, poor commercial experience with Exxon	
NX20 - Magnetic separation using Cs specific media	Reject-Process 5d, poor commercial experience	
NX21 - Actinide and Cs separation using Sodium Titranate (NaTo) and Super Lig 644	Disposition included under EX6	
NX22 – Magnetic Particles Remove metals and Radionuclides	Reject-Process 5d, poor commercial experience	
POM1 - Supercharge Late Wash	Disposition included under PON8	
POM2 - Flocculate the feed to ITP	Disposition included under POM22	
POM3 - Modify vapor space explosion control to eliminate benzene-producing metal catalysts	Disposition included under POM23	
POM4 - Vapor space mixing/benzene emission reduction	Disposition included under POM23	
POM5 - Stop precipitate degradation by killing Pd catalyst	ACCEPT	
POM6 - Selective precipitation of Cs via TPB	Reject-Safety 1a, Not licensable as stand alone facility, [comment - does not achieve sufficient TPB reduction]	Hybrid rejected based on selective precipitation of Cs deemed an operations consideration under PON8

Alternative #/Title	Disposition	Comments
POM7 - Optimize ITP process, pre-filtered solution, low TPB excess, reduced temperature, short cycle	Disposition included under POM21 and POM22	
POM8 - TPB Tank 48 safety re-enforcement	Disposition included under POM23	
POM9 - Catalyst removal - temperature controlled TPB processing	Disposition included under POM21 and POM22	
POM10 - Catalyst removal - temperature controlled, inhibitor added TPB processing	Disposition included under POM5 and POM22	
POM11 – ITP small batch rapid processing to DWPF with auxiliary tank cooling and improved process monitoring	Disposition included under PON8	
POM12 – Air injection based benzene deflagration prevention system for ITP	Disposition included under POM23	
POM13 – Separation of Cs from Cesium Tetraphenylborate	Reject-Safety 1b, no permittable final waste form Reject-Process 5A.3, effluent incompatible with DWPF	
POM14 – Use Late Wash Facility to replace ITP	Disposition included under PON8	
POM15 – Use Late Wash Facility to replace ITP	Disposition included under PON8	
POM16 – Secondary confinement	Reject-Safety 1a, incomplete development of confinement vs containment attributes	Hybrid disposition under POM23 (containment as an engineered safety feature)

Alternative #/Title	Disposition	Comments
POM17 - Buy additional benzene permitting units to release to atmosphere	Reject-Safety 1a, does not solve problem of converting salt into an immobilization waste form	
POM18 - Burning of benzene in place of propane at CIF	Reject-Safety 1a, does not solve problem of converting salt into an immobilization waste form	
POM19 - Low temperature ITP	Disposition included under POM21	
POM20 - ITP with safety grade air-based ventilation, auxiliary cooling and backup nitrogen	Disposition included under POM21 and POM23	
POM21 - Reduced temperature ITP	ACCEPT	
POM22 - Remove catalyst	ACCEPT	
POM23 - Application of additional engineered safety features to existing ITP process	ACCEPT	(comment - couple with other POM options)
POM24 – Change safety basis for ITP to risk based criteria.	Reject-Safety 1a, Option not licensable as is	HYBRID – full PRA scope plus Deterministic
POM25 – Electrochemical separation of palladium (Pd)	Disposition included under POM22	
POM26 – Complex Pd, Cu, etc. (and keep Pd in solution complex – a combined write-up)	Disposition included under POM5	Note: POM26 considered a better baseline

Alternative #/Title	Disposition	Comments
PON1 - "Modified" ITP (smaller, inerted equipment)	Disposition included under PON8	
PON2 - In-line TPB precipitation with in-line homogenized benzene/KTPB separation	Reject-Science 4b, demonstrated only on a test tube scale at present Reject-Process 5d, unproven separation method	
PON3 - Small tank T-48	Disposition included under PON8	
PON4 - The universal tank design for HLW cleaning and benzene burning	Reject-Safety 1c, uncontrolled explosions Reject-Schedule 2b, cannot meet 2020 date Reject-Process 5d, no assurance of complete combustion	
PON5 - Small precipitation facility	Disposition included under PON8	
PON6 - Small tank ITP with power fluidic devices for feed tank blending, salt solution transfer and sampling, reagent-salt solution mixing, precipitate aging and benzene stripping	Disposition included under PON8	
PON7 - Properly configured TPB process (continuous precipitation/batch washing)	Disposition included under PON8	
PON8 - Small batch TPB precipitation process with multiple process vessels	ACCEPT	
PON9 - Use of tri-xylyl monohydroxyborates to precipitate Cs	Reject-Science 4b, maturity of process is limited to preliminary patent work	
PON10 - Coupled rapid (or prefiltered) TPB precipitation, subsequent incineration and vitrification of resultant ash	Reject-Process 5b, poor demonstrated maintainability in commercial applications and difficult to operate Reject-Safety 1c, safety issue exacerbated by lack of technical maturity	Hybrid rejected based on concept does not address ITP problem, results in replacement of SPC at DWPF only

Alternative #/Title	Disposition	Comments
PON11 - Cesium (alkaline soluble) complexation and ultrafiltration	Disposition included under EX12	
PON12 - Alternate precipitating agents for cesium removal	Reject-Science 4b, maturity and no known components	
PON13 - Complexing agent and ultrafiltration	Disposition included under EX12	
PON14 – Combine precipitation and solids removal in one unit	Disposition included under PON8	
PON15 – Small batch TPB Precipitation Process with multiple Process Vessels	Disposition included under PON8	
PON16 – Hinsley multi-stage, fluidized-bed, counter-current solid-liquid contactor for continuous removal of Cs from turbid salt solution using an ion exchanger and also using Power Fluidic devices.	Reject-Safety 1b, does not meet final permittable waste form – an incomplete process	Hybrid engineering features.

Table 2 – Summary of Alternatives Accepted for Ranking

Alternative #/Title	Disposition	Comments
SE3 - Cs solvent extraction, caustic side process	ACCEPT	
SE4 - Removal of Cs from acidic wastes by solvent extraction	ACCEPT	[SE2, SE5, SE6]
CR2 - Salt washing/fractional crystallization	ACCEPT	[CR1]
CR3 - Salt separation by fractional crystallization	ACCEPT	With positive attributes (total waste generation) [CR4]
CR5 - Selective fractional crystallization of salts	ACCEPT	[CR1]
EC1 - Electrochemical destruction of nitrates and nitrites combined with sodium hydroxide recycle	ACCEPT	
EC4 - Electro-chemical separation of salts	ACCEPT	with positive attributes (total waste reduction) [EC2, EC3, EC5]
VT2 - Vitrification of salt waste	ACCEPT	
ML7.1 – Grout disposal of salt solution containing Cs 137.	ACCEPT	with positive attributes [ML4, ML7, ML10]
ML9.1 – Salt dehydration and encapsulation with TRU going to WIPP	ACCEPT	[ML9]

Alternative #/Title	Disposition	Comments
ML12 - Direct processing of interstitial liquid from Crystallized salt solutions	ACCEPT	No restriction from DF requirement
ML13 – Grout the salt solution to a purpose built facility without worrying about separating the Cs-137, etc.	ACCEPT	
MLH1 – Sodium Titinate for Pu & Sr salt and liquor separation, some form of salt disposition and liquor to DWPF	ACCEPT	Need to assess Hybrid combination of Alt's ML1, ML8, ML9, ML11, ML12.
EX8.1- Potassium to saltstone, followed by TPB precipitation	ACCEPT	Use ion exchange for K removal [EX8]
EX10 – Electrically switched ion-exchange	ACCEPT	[EX13]
EX12 – Actinide and Cs separations using regenerable superlig and IX materials	ACCEPT	positive attributes - nitric acid / SRAT process enhancement / reduced eluate volume [EX2, EX3, EX5, EX6, EX15, PON11, PON13, NX6]
NX5 - Cesium removal by counter current processing with CST	ACCEPT	
NX9 - Zeolite ion exchange: vitrification	ACCEPT	[NX1]
NX11 - Acid side ion exchange	ACCEPT	[EX14]
NX13 - CST ion exchange: coupled flowsheet	ACCEPT	[NX2, NX3, NX8, NX10, NX15]

Alternative #/Title	Disposition	Comments
NX14 - CST ion exchange: parallel flowsheet	ACCEPT	[NX10]
NX16 - Ion exchange on glass matrix	ACCEPT	
NX18.1 – Either store or immobilize in a temperature tolerant waste form eg ceramic.	ACCEPT	[NX7, NX8, NX17, NX18]
POM5 - Stop precipitate degradation by killing Pd catalyst	ACCEPT	[POM10, POM26] {POM26 deemed a better baseline write-up}
POM21 - Reduced temperature ITP	ACCEPT	[POM7, POM9, POM19, POM20]
POM22 - Remove catalyst	ACCEPT	[POM2, POM7, POM9, POM10, POM25]
POM23 - Application of additional engineered safety features to existing ITP process	ACCEPT	(comment - couple with other POM options) [POM3, POM4, POM8, POM12, POM16, POM20]
PON8 - Small batch TPB precipitation process with multiple process vessels	ACCEPT	[POM1,POM6, POM11, POM14, POM15, PON1, PON3, PON5, PON6, PON7, PON14, PON15]

Table 3 – Summary of Alternatives Not Selected

Alternative #/Title	Disposition	Comments
GL1 – Bedrock storage	Reject-Safety 1b, Does not meet final disposal form for the salt. Reject-Schedule 2b, change in Federal law	
GL2 - Nevada disposition of waste materials	Reject-Safety 1a, International treaty for bomb testing	
GL3 – Geochemical injection followed by in situ vitrification	Reject-Safety 1c, generation of explosive hazards	
SE1 - Hollow fiber extraction	Reject-Safety 1b, No final disposal form Reject-Schedule 2b, Small scale application currently in use Reject-Process 5d, Immature for specific application on HLW tanks	
VT1 – Vitrify salt in situ	Reject-Safety 1c, Volatile off-gases, no containment Reject-Safety 1b, Does not meet final disposal form for the salt Reject-Process 5d, In tank melter operation, electrode concept	
VT3 - Direct feed to DWPF	Reject-Schedule 2b, Large volume increase in DWPF waste form	
VT4 - Feed the whole dewatered wastes into melter	Reject-Schedule 2b, Large volume increase in DWPF waste form	
VT5 - Wash and direct feed to DWPF	Reject-Schedule 2b, Large volume increase in DWPF waste form	
VT6 - No pre-treatment: direct vitrification of all liquid waste	Reject-Schedule 2b, Large volume increase in DWPF waste form	
ML1 - Dewater salt tanks and build additional tanks	Reject-Safety 1b, Does not meet final disposal form for the salt.	

Alternative #/Title	Disposition	Comments
ML3 - Cs encapsulation in solid foam	Reject-Safety 1b, Does not meet final disposal form for the salt.. Reject-Schedule 2a, No volume reduction. Reject-Schedule 2b, No volume reduction	
ML5 - Cs accumulating bacteria on a fiber matrix	Reject-Science 4b, Theoretical application only, lack of radiochemical application. Reject-Process 5d, Inadequate eng basis.	
ML6 - KBI centrifugal bioreactor technology (CBR)	Reject-Science 4b, Theoretical application only and no micro-organisms identified for Cs. Reject-Safety 1b, Same as ML-1.	
ML8 - Interstitial fluid displacement for preferential recovery of Cs from saltcake	Reject-Safety 1b, Same as ML-1. Reject-Science 4b, Inadequate basis. Reject-Process 5d, Inadequate eng basis.	
PI4 - Precipitation of Cs aluminosilicate from dissolved salt solution	Reject-Science 4b, maturity and uncertain kinetics	
NX12 - Magnetic separation using Cs specific media	Reject-Process 5d, poor commercial experience with Exxon	
NX19 - In-tank separation with CST using the Magnetically Assisted Chemical Separation (MACS) process	Reject-Process 5d, Poor commercial experience with Exxon	
NX20 - Magnetic separation using Cs specific media	Reject-Process 5d, poor commercial experience	
NX22 – Magnetic Particles Remove metals and Radionuclides	Reject-Process 5d, poor commercial experience	
POM13 – Separation of Cs from Cesium Tetraphenylborate	Reject-Safety 1b, no permittable final waste form Reject-Process 5A.3, effluent incompatible with DWPF	

Alternative #/Title	Disposition	Comments
POM17 - Buy additional benzene permitting units to release to atmosphere	Reject-Safety 1a, does not solve problem of converting salt into an immobilization waste form	
POM18 - Burning of benzene in place of propane at CIF	Reject-Safety 1a, does not solve problem of converting salt into an immobilization waste form	
PON2 - In-line TPB precipitation with in-line homogenized benzene/KTPB separation	Reject-Science 4b, demonstrated only on a test tube scale at present Reject-Process 5d, unproven separation method	
PON4 - The universal tank design for HLW cleaning and benzene burning	Reject-Safety 1c, uncontrolled explosions Reject-Schedule 2b, cannot meet 2020 date Reject-Process 5d, no assurance of complete combustion	
PON9 - Use of tri-xylyl monohydroxyborates to precipitate Cs	Reject-Science 4b, maturity of process is limited to preliminary patent work	
PON12 - Alternate precipitating agents for cesium removal	Reject-Science 4b, maturity and no known components	

Table 4 – Alternatives for Hybrid Consideration

Alternative #/Title	Disposition	Comments
ML2 - Calcine salt and store calcine	Reject-Safety 1b, Does not meet final disposal form for the salt.	Hybrid rejected based oncalcine not viable for high Na solutions.
ML4 - Class C Saltstone	Reject-Science 4b, Needs to be combined with separation process	Hybrid disposition included under ML7.1
ML7 - Disposal of salt solution containing Cs 137 in Saltstone	Reject-Safety 1b, Does not meet final disposal form	Hybrid to address waste form, renumber as ML7.1
ML9 - Salt dehydration and encapsulation.	Reject-Safety 1b, Does not meet final disposal form.	Hybrid to add TRU to WIPP, renumber as ML9.1
ML10 - In situ grouting of salt within the HLW tanks	Reject-Schedule 2b, Need for additional tanks to support current missions Reject-Process 5a1, Space availability	Need to check volume reduction /increase from grouting. Hybrid disposition included under ML7.1
ML11 - Bio-denitrification in large tanks	Reject-Science 4b, Availability of biological agent Reject-Process 5d, Engineering maturity for Process scale & material	Hybrid rejected based on no benefit from this denitrification approach even considered with other technology
PI1 - Inorganic precipitating agent for Cs	Reject-Science 4b, lab scale proof-of-concept starting	Hybrid rejected based on having no agent identified.
PI2 - Cobalt dicarborane (a quasi-inorganic precipitate)	Reject-Safety 1c, Hydrogen evolution from radiolytic & temperature decomposition Reject-Science 4b, lab scale testing complete, no further work performed	Hybrid rejected based on evaluation wrt combining with solvent extraction considered not viable based on chemical instability
PI3 - Strontium precipitation through isotopic dilution	Reject-Safety 1b, Does not address final waste form	Hybrid rejected based on Na Titinate being the preferred removal agent
EX1 - 1976 Flowsheet - elutable ion exchage	Reject-Schedule 2b, Construction of a large canyon facility would result in DWPF rate to exceed peak capacity, assumption made that new facility would start feeding DWPF in 10 years	Hybrid rejected based on phenol sulphonic being an older resin and current resins deemed better options (eg superlig, RF).

Alte...ative #/Title	Disposition	Comments
EX4 - Continuous ion exchange via a simulated moving bed	Reject-Safety 1b, Does not meet final permittable waste form, an incomplete process	Hybrid disposition included under EX12
NX18 - Cs removal with CST and storage in stainless steel tank	Reject-Safety 1b, no permittable final waste form.	Hybrid to address address waste form and renumber as NX18.1
POM6 - Selective precipitation of Cs via TPB	Reject-Safety 1a, Not licensable as stand alone facility, [comment - does not achieve sufficient TPB reduction]	Hybrid rejected based on selective precipitation of Cs deemed an operations consideration under PON8
POM16 – Secondary confinement	Reject-Safety 1a, incomplete development of confinement vs containment attributes	Hybrid disposition under POM23 (containment as an engineered safety feature)
POM24 – Change safety basis for ITP to risk based criteria.	Reject-Safety 1a, Option not licensable as is	HYBRID – full PRA scope plus Deterministic
PON10 - Coupled rapid (or prefiltered) TPB precipitation, subsequent incineration and vitrification of resultant ash	Reject-Process 5b, poor demonstrated maintainability in commercial applications and difficult to operate Reject-Safety 1c, safety issue exacerbated by lack of technical maturity	Hybrid rejected based on concept does not address ITP problem, results in replacement of SPC at DWPF only
PON16 – Hinsley multi-stage, fluidized-bed, counter-current solid-liquid contactor for continuous removal of Cs from turbid salt solution using an ion exchanger and also using Power Fluidic devices.l	Reject-Safety 1b, does not meet final permittable waste form – an incomplete process	Hybrid engineering features

Table 5 –Ranking Within Categories of Accepted Alternatives

Alternative #/Title	Rank	Comments
SE3 - Cs solvent extraction, caustic side process	1	Current character of waste **[Carry Forward as "Caustic Side Solvent Extraction – DWPF Vitrification"]**
SE4 - Removal of Cs from acidic wastes by solvent extraction	2	**[Carry Forward as "Acid Side Solvent Extraction DWPF Vitrification"]**
CR5 - Selective fractional crystallization of salts	1	Benefits of continuous process **[Carry Forward as "Fractional Crystallization – DWPF Vitrification"]**
CR2 - Salt washing/fractional crystallization	2	Batch oriented
CR3 - Salt separation by fractional crystallization	3	Extra unit of electrochemical
EC4 - Electro-chemical separation of salts	1	Two cell option, reduced K load in DWPF - **[Carry Forward as "Electrochemical Separation and Destruction – DWPF Vitrification"]**
EC1 - Electrochemical destruction of nitrates and nitrites combined with sodium hydroxide recycle	2	NA cell only
VT2 - Vitrification of salt waste	1	**[Carry Forward as "Direct Vitrification"]**
MLH1 – Titinate for Pu & Sr salt and liquor separation, some form of salt disposition and liquor to DWPF	1	Ensures handling of TRU & non-TRU Includes DF >or= to 1 **[Carry Forward as "Supernate Separation – DWPF Vitrification"]**
ML7.1 – Grout disposal of salt solution containing Cs 137	2	**[Carry Forward as "Direct Disposal as Grout"]**

Alternative #/Title	Rank	Comments
ML12 - Direct processing of interstitial liquid from Crystallized salt solutions	3	increased tank top operations, available equipment and efficiency for tank size
ML13 – Grout the salt solution to a purpose built facility without worrying about separating the Cs-137, etc.	4	Option addressed as part of ML7.1
ML9.1 – Salt dehydration and encapsulation with TRU to go to WIPP	5	Large demand on WIPP; new shipping containers
EX12 – Actinide and Cs separations using regenerable superlig and IX materials	1	Evaluate column, simulated moving bed & packed bed, depth & versatile, multiple exchangers working. **[Carry Forward as "Elutable Ion Exchange – DWPF Vitrification"]**
EX8.1- Potassium to saltstone, followed by TPB precipitation	2	**[Carry Forward as "Potassium Removal followed by TPB Precipitation"]**
EX10 – Electrically switched ion-exchange	3	Limited maturity on media
NX13 - CST ion exchange: coupled flowsheet	1	**[Carry Forward as "Crystalline Silicotitanate (CST) Ion Exchange – DWPF Vitrification"]**
NX14 - CST ion exchange: parallel flowsheet	2	**[Carry Forward as "Crystalline Silicotitanate (CST) Ion Exchange – New Facility Vitrification"]**
NX9 - Zeolite ion exchange: vitrification	3	West Valley Flowsheet **[Carry Forward as "Zeolite Ion Exchange – DWPF Vitrification"]**
NX18.1 – CST for Cs removal and temperature tolerant waste form.	4	No WIPP (no TRU) **[Carry Forward as "Crystalline Silicotitanate (CST) Ion Exchange – Ceramic Waste Form"]**

Alternative #/Title	Rank	Comments
NX11 - Acid side ion exchange	5	**[Carry Forward as "Acid Side Ion Exchange – DWPF Vitrification"]**
NX5 - Cesium removal by counter current processing with CST	6	No benefits over column
NX16 - Ion exchange on glass matrix	7	High pH environment issue
POM21 - Reduced temperature ITP	1	Minimal modifications **[Carry Forward as "Reduced Temperature ITP"]**
POM22 - Remove catalyst	2	**[Carry Forward as "Catalyst Removal ITP"]**
POM23 - Application of additional engineered safety features to existing ITP process	3	**[Carry Forward as "ITP with Enhanced Safety Features"]**
POM5 - Stop precipitate degradation by killing Pd catalyst	4	Down Stream negative effects
PON8 - Small batch TPB precipitation process with multiple process vessels	1	**[Carry Forward as "Small Tank TPB Precipitation"]**

ATTACHMENT 1 – ORIGINAL PRO-FORMAS

Input for the initial list selection process was gathered from a number of sources including brainstorming sessions and solicitation from personnel inside and independent of SRS and the DOE Complex. The input was documented on the attached Pro-Forma sheets.

In reviewing the sheets, it should be noted that:

(a) originators were encouraged to document even marginal or extreme ideas (which might trigger more practical concepts) ; and

(b) the Team did not edit the attached Pro-Formas, preferring instead to present the raw information, as received

HLW SALT DISPOSITION PROCESS ALTERNATIVES

#26 at 3/24/98 Meeting

Alternative #: GL 1 Sponsor: R.F. Bradley Date: 3/25/98

Originator: R.F. Bradley Phone #: 2-9879

Title: Bedrock Storage

Description: Drill tunnels in the Triassic Basin at SRS for Waste Disposal (assumed to be a solution or slurry). This concept could be applied to lower activity waste fractions.

Technical Maturity: Bedrock Storage is the oldest and most prevalent concept for ultimate disposal. Evaluation of the rock beneath SRS was stopped in the 1970's.

Safety Issues: Even though movement is slow water moves through the rock and ultimately ends up in the Savannah River. Wells must be sealed to avoid contact with the aquifers above the rock.

Advantages: This is final disposal of the waste fraction. The hazardous material is removed from the biosphere and the legacy is not passed along as a problem to the next generation.

Disadvantages: Politically, this is very hard to sell.

Process Diagram (Optional) #26

Bedrock Disposal

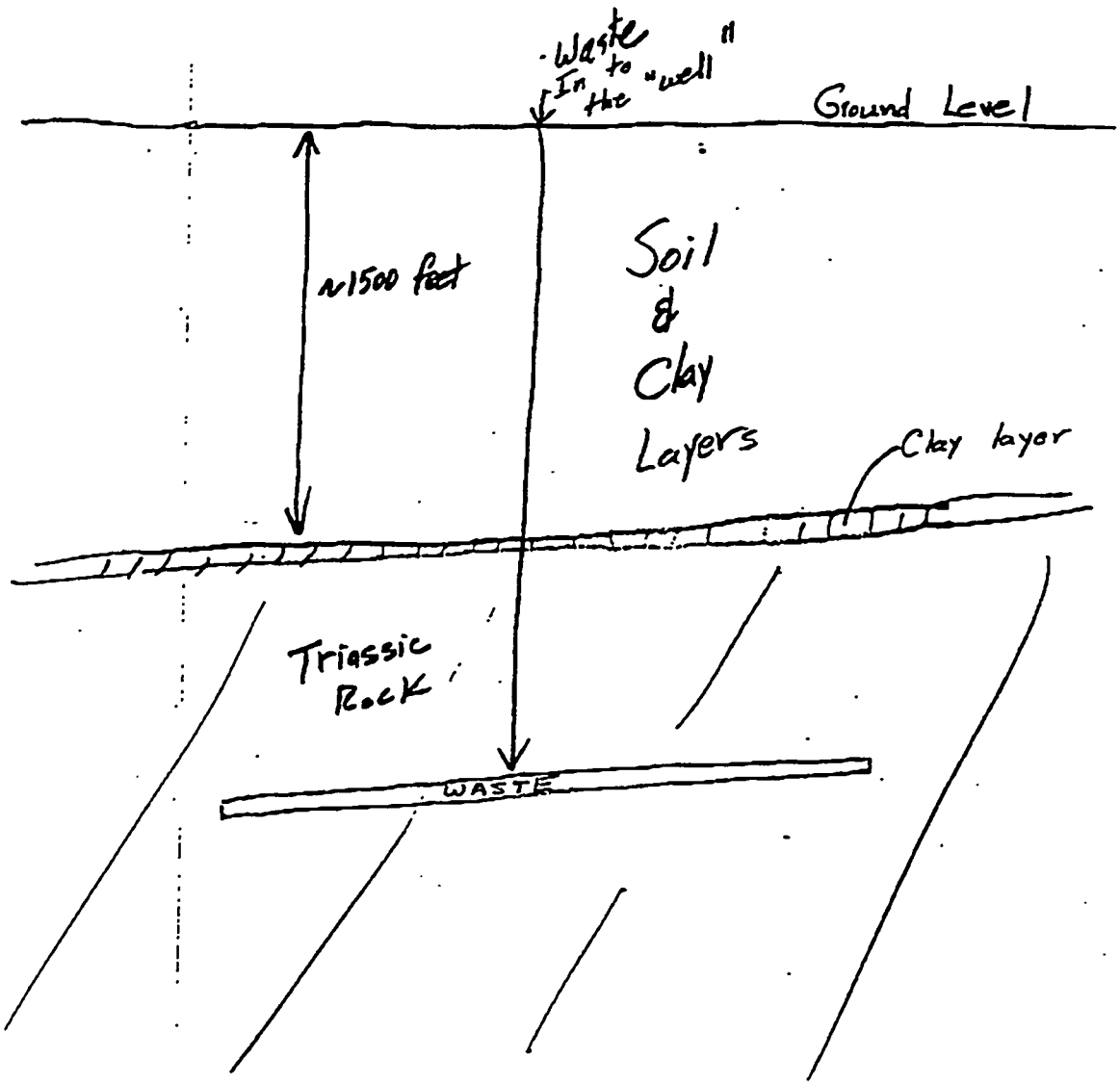

HLW SALT DISPOSITION PROCESS ALTERNATIVES

Alternative #: GL2 **Sponsor:** _____ **Date:** March 18, 1998

Originator: Ted Bonnough **Phone #:** 8-0450

Title: Nevada Disposition of Waste Materials

Description: Transport SRS waste to the Nevada "Bomb" Test Site. Put the waste materials into the old bomb cavities and ingnite with a small nuclear device.

Already Available:
- Transport cannister devices
- Highway or Train carriers
- Bomb cavities (Vitrified basalt chambers up to a 1 mile deep, & 300 ft and over in diameter
- Excess nuclear devices

There is no new impact on the environment

This use of the bomb chambers was considered by DOE as a viable approach prior to the decisions on nuclear proliferation. There are a couple of pre-1980 ERDA/DOE studies/reports on this, (titles unknown).

Technical Maturity: This is a very technically mature. There is no requirement for technical development. The proposal consists of using existing approved methods, equipment and components. The same methods that were used to move 3 Mile Island materials to DOE INEL can be used as example.

Safety Issues: Using the transport of 3 Mile Island materials to INEL as an example there are no known new safety issues.

Advantages: Near Term solution, Use of available resources, No resources required for development of new facility or process. End results do not require any large amount of resources for followup. While this appears close to the wild side, the simplicity and overall cost savings make it a serious consideration. Meets all of the Mission Function and Requirements with minimum resource costs. Even in the event no nuclear device were used, the chambers are more secure over a longer period than the available tanks or future tanks, (10000 Yrs).

With the number of chambers available all waste from all DOE/DOD sites could be put into the chambers for many years before setting off one nuclear device. This would accelerate the closing of existing storage tanks and sites.

Disadvantages: Serious selling to overcome political considerations would have to be made.

HLW SALT DISPOSITION PROCESS ALTERNATIVES

Alternative #: GL 3 **Sponsor:** T. Maxted **Date:** 3/27/98

Title: Geochemical injection followed by in-situ vitrification

Description: Inject salt solution into ground, adj. suitable chemical nature and in-situ vitrify by joule-~~or~~ heating or plasma technology.

Technical Maturity: Low, although in-situ vitrification is semi-proven.

Safety Issues: Medium but politically there's little chance such a treatment option would succeed.

Advantages: Reduced transportation costs.
" product quality and canisterization costs.

Disadvantages: Politics.

ex
GL 1
1.C

HLW SALT DISPOSITION PROCESS ALTERNATIVES

Alternative #: SE1 **Sponsor:** Cussler **Date:** 8/21/98.

Title: Hollow fiber extraction

Description: The extraction is carried out in hollow fibers, like those in an artificial kidney or a blood oxygenator. This provides a huge increase in interfacial area per volume.

Technical Maturity: Fair. The technology, actively pushed by Hoechst, now has over 1200 commercial installations, but most are small.

Safety Issues: Polymer fibers must stand radiation

Advantages: Cuts equipment volume 1000x. Probably easy to operate remotely, but unproven.

Disadvantages: Requires developing much more rugged technology than currently exists

Process Diagram (Optional)

Alternative #: SE 2 Sponsor: Zamorsatis

Title: Removal of Cesium from Acidic Wastes via Solvent Extraction

Description: Acidic wastes exist at Idaho National Engineering Laboratory (INEL) containing appreciable cesium and actinides. Researchers at INEL, Argonne National Laboratory and Khoplin Radium Institute lead the effort to develop solvent extraction processes for treatment of these wastes. Technology development significantly lags that for alkaline wastes. Extraction studies exist for chlorinated cobalt dicarbollide, for the crown ether used in the SREX process, and for newly developed crown ethers. Testing to date demonstrated cesium removal efficiencies that now begin to approach that for the In-Tank Precipitation process., satisfying the NRC Class A Low Level Waste Criteria of 1 Ci/m^3. Usage at Savannah River Site (SRS) for all program wastes would prove impractical. However, deployment of the technology at the demonstration scale could reduce the influx of waste for storage providing a stopgap measure to allow longer implementation time for the ultimate cesium removal technology at the site.

Reference: Feasibility testing successfully completed on radioactive wastes at three separate facilities. Facility design and material flow sheet development lacking for current application.

Technical Maturity: Ready for pilot scale testing.

Advantages: Impractical for application at SRS for other than a stopgap measure to prevent influx of additional waste.

Disadvantages: Incompatible with existing wastes and equipment at SRS. Costly specialty chemical as extractant. Commercial manufacture and distribution not established at large scale.

Safety Issues Solvents selected could pose safety concerns. Recent development makes non aromatic solvents possible.

Key Initial Tests: None recommended. Observe ongoing work.

Process Diagram (Optional, see reverse side)

Alternative #: SE3 Sponsor: Zamorskikh

Title: Cs Solvent Extraction; caustic side process

Description: (a) Filter supernate; (b) remove Sr, TRU, Cs by solvent extraction; (c) vitrify Sr, TRU, Cs in DWPF.

Reference: Lab-scale testing at ORNL.

Technical Maturity: Limited to small-scale tests. Removal and stripping of Cs from the extractant phase requires research to optimize.

Advantages: Uses existing canyon facilities; Familiar Liquid-Liquid processing operation.

Disadvantages: Unproven technology for cesium removal; Expensive extractant; French patents on extractant; alcohol modifiers needed.

Safety Issues: Extractant decomposition product impacts; Diluent flammability;

Key Initial Tests: Distribution coefficient measurements with SRS simulant and supernate; extractant stability; small-scale centrifugal contactor test

Process Diagram (See reverse side):

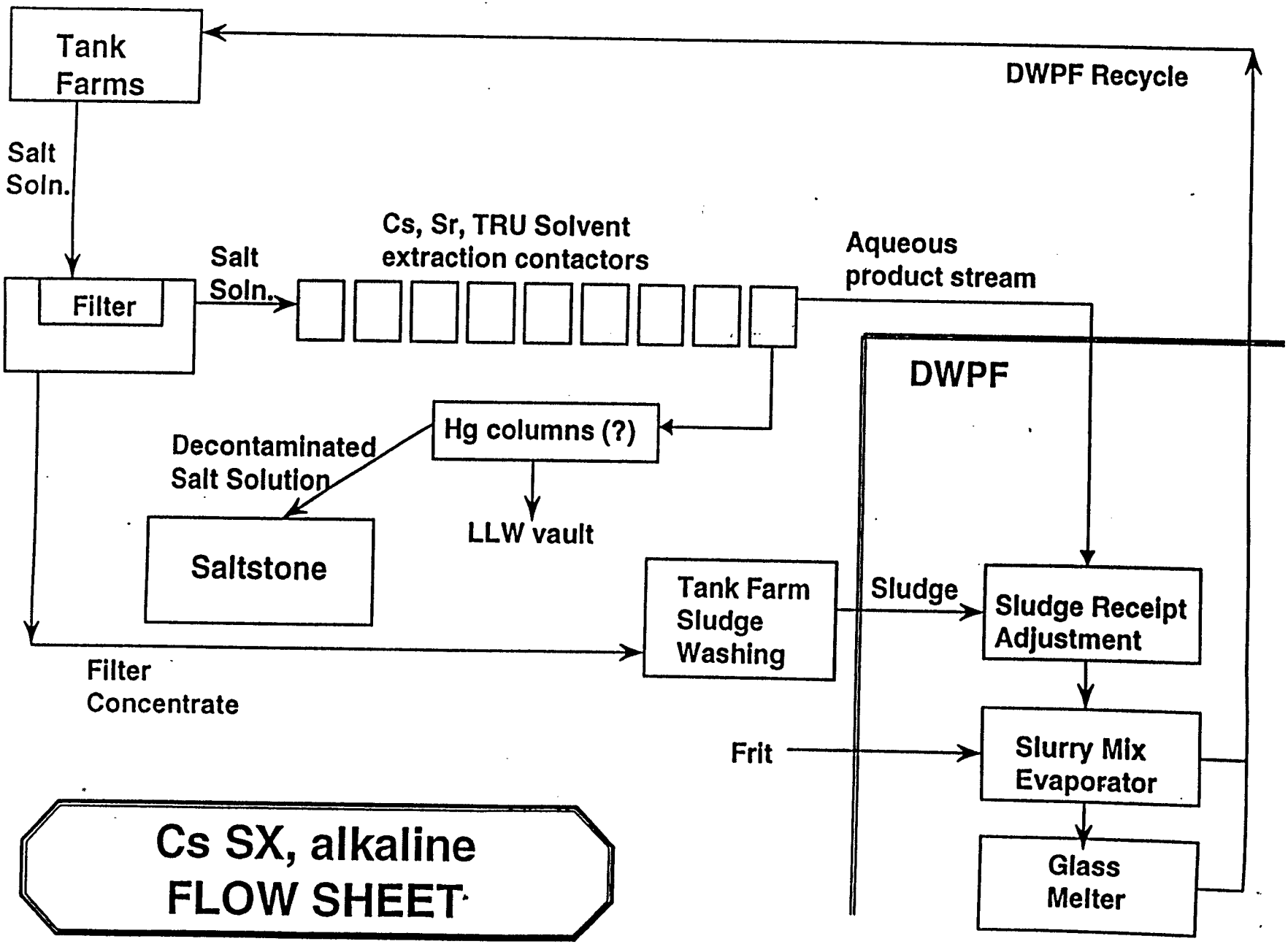

Cs SX, alkaline FLOW SHEET

HLW SALT DISPOSITION PROCESS ALTERNATIVES

Alternative #: SE 4 Sponsor: _____ Date: 3/25/98

Originator: Major Thompson Phone: 5-2507

Title: Removal of Cesium from Acidic Wastes by Solvent Extraction

Description: Salt solution would be dissolved in water and transferred to stainless steel tanks where the solution would be acidified to >1 M with HNO_3. The solutions would then be treated by a solvent extraction process or series of processes to remove actinides, Cs, and Sr from the salt solution. The decontaminated solution would then be evaporated too recover as much nitric acid as possible before neutralization and sending for disposal as Saltstone. Alternatively, the acid stripped solution could be evaporated to dryness and sent to Saltstone or vitrified in a new vitrification facility for low level waste. The radionuclides would be stripped from the extractant(s) and sent to DWPF for vitrification. The solvent extraction could be done in F canyon with replacement of some of the tanks and equipment. A new shielded building could also be built to contain the solvent extraction equipment and required stainless steel tanks.

Technical Maturity: Acidic wastes exist at Idaho National Engineering and Environmental Laboratory (INEEL) and in Russia, Great Britain, and France. INEEL wastes contain Cs, Sr and actinides which must be removed from the solution. Researchers at INEEL, Argonne National Laboratory (ANL), Oak Ridge National Laboratory (ORNL) and the Khoplin Radium Institute in Russia have been working on various solvent extraction processes to remove these radionuclides. The Russians have used cobalt dicarbollide in nitrobenzene solvent along with PEG in full scale facilities to remove Cs and Sr from their wastes. Working with INEEL, the Russians have developed a safer solvent that has been successfully tested in laboratory scale centrifugal contactors with INEEL acid wastes. The Russians have also demonstrated a solvent extraction process with phosphine oxide extractant which extracts actinides form the solutions. ANL researchers have developed crown ether extractant to remove Sr and the TRUEX process to remove actinides from INEEL acid wastes. These processes have also been successfully tested with INEEL acid wastes in laboratory scale centrifugal contactors. ORNL is developing a process for extraction of Cs from INEEL acid waste. Work has been small laboratory scale with simulant solutions. Most of the processes which could be used are ready for pilot scale demonstration.

Safety Issues: Safety issues would be involved with the solvents used during extraction. However, the base solvent used for several of the processes is TBP in kerosene type diluents similar to thoise presently accepted for use at SRS. The Russians have replaced the highly toxic and flammable nitrobenzene diluent with one that is not aromatic and has a high flash point so that it would be classified as combustible rather than flammable.

Advantages: Solvent extraction processes can be engineered to obtain the desired decontamination factor to yield a low level waste solution containing <1 Ci/m^3. Solvent extraction processes are in common use throughout the world for purification of radioactive materials so design and operation would be easy to implement. Decontamination from Na will be very high so that little Na will be sent to DWPF with the radionuclides.

Disadvantages: Acidification of the salt solution will result in increased low level waste volume and increased use of NaOH. The increases could be reduced by using electrochemical recycle of NaOH in the waste. The NaOH could be removed prior to solvent extraction which would reduce the amount of acid required as well. The extractants used for Cs are expensive specialty chemicals for which there are few commercial sources. Cobalt dicarbollide is only available from Russia. The calixarene extractant is not commercially available yet, but may be within the next 1-2 years.

HLW SALT DISPOSITION PROCESS ALTERNATIVES

Alternative#: SES Sponsor: J. P. Morin Date: 3/1798

Originator: Bruce Moyer, ORNL Phone #: (423) 574-6718

Title: Cesium Removal By Solvent Extraction

Description:
This process uses calixorene crown eithers in a tributlyphosphate (TBP)-modified aliphatic kerosene diluent to extract cesium and strontium from alkaline salt solutions. Loading and stripping of the extractant takes place in a compact multistage centrifugal contactor. The decontamination factor depends on the crown ether and the number of contactor stages. Based on batch distribution coefficients, a 100 liter/min 20 stage contactor (8 stages of extraction, 2 stages of scrubbing, and 10 stages of stripping) is calculated to produce a ^{137}Cs DF of about 10,000. Crown ethers have been shown to be stable when exposed to high radiation > 1 month. All of the crown ether is recovered and recycled in the process. Some makeup of the dilluent is expected. Cesium can be stripped by water or by weak 0.01M nitric acid.

Technical Maturity:
Multistage centrifugal contactor solvent extraction processes have been in use in nuclear separations for decades. The use of crown ethers as the extraction agent for Cs is still at the bench scale. Work is currently being funded by the ESP cross cut focus area for application at Hanford and Idaho, but this work could be quickly focused on a SRS feed.

Safety Issues:
Liquid phase handling of kerosene-bearing fluids.

Advantanges:
The principle advantage of a solvent extraction process over an elutable ion exchange process is the operating cost. On a comparable basis, capital costs of solvent extraction are about 65% higher than elutable ion exchange but the operating costs are 1/3 of the operating cost for ion exchange. Another major advantage is that the loaded extractant can be stripped with water with very little added salt going to vitrification.

Disadvantages:
This process employs organic materials in contact with radiation. Extraction and removal of decomposition products has not been shown. Many of the crown ethers are proprietary and will require licensing.

Alternative #: SF 6 Sponsor: Sam Fink

Title: Removal of Cesium from Acidic Wastes via Solvent Extraction

Description: Acidic wastes exist at Idaho National Engineering Laboratory (INEL) containing appreciable cesium and actinides. Researchers at INEL, Argonne National Laboratory and Khoplin Radium Institute lead the effort to develop solvent extraction processes for treatment of these wastes. Technology development significantly lags that for alkaline wastes. Extraction studies exist for chlorinated cobalt dicarbollide, for the crown ether used in the SREX process, and for newly developed crown ethers. Testing to date demonstrated cesium removal efficiencies that now begin to approach that for the In-Tank Precipitation process., satisfying the NRC Class A Low Level Waste Criteria of 1 Ci/m^3. Usage at Savannah River Site (SRS) for all program wastes would prove impractical. However, deployment of the technology at the demonstration scale could reduce the influx of waste for storage providing a stopgap measure to allow longer implementation time for the ultimate cesium removal technology at the site.

Reference: Feasibility testing successfully completed on radioactive wastes at three separate facilities. Facility design and material flow sheet development lacking for current application.

Technical Maturity: Ready for pilot scale testing.

Advantages: Impractical for application at SRS for other than a stopgap measure to prevent influx of additional waste.

Disadvantages: Incompatible with existing wastes and equipment at SRS. Costly specialty chemical as extractant. Commercial manufacture and distribution not established at large scale.

Safety Issues Solvents selected could pose safety concerns. Recent development makes non aromatic solvents possible.

Key Initial Tests: None recommended. Observe ongoing work.

Process Diagram (Optional, see reverse side)

HLW SALT DISPOSITION PROCESS ALTERNATIVES

Alternative #: CR 1 Sponsor: Date: 25 March 1998

Originator: Paul D. d'Entremont Phone #: 208-8727

Title: Crystallize Sodium Nitrate (and perhaps other bulk salts), then send liquid to DWPF

Description: Perform fractional crystallization on HLW salt solution. Send the crystallized salt to Saltstone (after redissolving it). The liquor left behind is sent to DWPF.

Most of the volume of HLW Saltcake is actually non-radioactive salts, such as sodium nitrate and nitrite. Because of their high concentration relative to the contaminants--specifically cesium, strontium, and plutonium—these salts would be the first to precipitate when the waste is fractionally crystallized. The key to the success of this concept is to properly select the amount of crystallization that would be done. My proposal is to continue the crystallization to the point were most of the bulk salts have been crystallized but before the contaminants of concern have precipitated significantly.

Technical Maturity: Fractional crystallization is a well-known technology. A flowsheet for this process could be developed today with little technical risk.

Safety Issues: None beyond the normal safety issues of handling high-level waste.

Advantages: Known technology, few safety issues.

Disadvantages: Would probably send more cesium to Saltstone than the currently flowsheeted ITP process. Also would probably send more alkali to DWPF. Thus, there would be modifications required at both places to accommodate this flowsheet.

HLW SALT DISPOSITION PROCESS ALTERNATIVES

Alternative #: CR 2 Sponsor: Hank Elder Date: 3/25/98

Originator: Hank Elder (Neil Davis helped) Phone #: 803 208-6049

Title: "Salt Washing / Fractional Crystallization"

Description: (1) Saturated Supernate is decanted or salt is dissolved, as necessary, and transferred to Type III Tank. (2) NaTi2O5H is added to sorb Pu and Sr. (3) Solution is filtered and clarified salt solution is transferred to "Salt Washing Stage". (4) Solution is concentrated, cooled (5) liquor w/Cs is transferred fwd to "Cs Concentration Stage" (6) Salt crystals are rinsed with condensate and rinse is transferred to "Cs Conc. Stage". (7) Washed salt is dissolved in condensate and made into saltstone. (8) Concentrated solution is evaporated, cooled and concentrated Cs (+ subsequent rinse) is transferred fwd to another smaller evaporator. (9) Step 8 repeated in small evaporator. Concentrate and rinses fwd to DWPF CPC - SRAT and redissolved salt back. SEE ATTACHED DISCUSSION

Technical Maturity: Unit Ops are very mature. Flowsheet needs verification with real salt (phase equilibria, crystal size, etc.) and testing with simulants to develop design data. Should not be built without engineering scale testing at 1/10th or so

Safety Issues: Normal remote processing issues. Final stream to DWPF chemical cell is blazing hot (> 500 Ci/gal). Quantity is small, few hundred gallons

Advantages: DWPF flowsheet does not change = still frit plus sludge. Chemistry very little different - somewhat higher alkali. NO ORGANICS. NO VENT PLUGGAGE. SRS has considerable experience with evaporating concentrated salt solutions. Might fit in LW + SPC. Little or no additional water added to HLW system

Reasonable chance that two salt tanks in F-Area tanks could be washed in place and only the supernate and rinses processed by this method. 2 million gallons space recovered quickly. This salt would go directly to Saltstone [Neil's Idea]

Disadvantages: Large remote equipment. Large utility cost from multiple evaporation and chilling steps.

Attachments: Processing steps list. Hand drawn simple flowsheet (needs work). EMAIL w/ its attachment (1/30/98) discussing initial ideas. The email attachment was edited to make it less whimsical.

Rework of Flowsheet 3/25/98

Feed Clarification / Solids Removal Stage

1. Fill Clarification Tank (Type III Waste Tank) with Supernate and Dissolved Salt (@ saturation or nearly so).
2. Add NaTi2O5H to sorb soluble Sr and Pu. Allow this and the sludge to settle.
3. Filter and send to "Salt Washing" stage directly (or better, store filtrate in Type III feed tank)

Salt Washing Stage

1. Feed Evaporator / Crystallizer at ~10 gpm. Concentrate ~ 4:1.
2. Store clean condensate (maybe use a bubble cap tray column or packed bed w/ reflux) in large bathtub tank. This could be lightly shielded w/ proper controls. Maybe have a small reflux drum inside cell and overflow to bathtub or other tankage outside.
3. Cool and Crystallize salt, while agigtating.
4. Transfer concentrate to Cesium Concentration stage.
5. Rinse with clean condensate (5-10% of slushy salt volume). Transfer rinse to Cs Concentration stage.
6. Repeat 8 as necessary.
7. Dissolve slushy salt slurry with clean condensate and transfer to saltstone.

Cesium Concentration Stage

1. Feed first small evaporator (@ about 3 gpm) and concentrate 4:1.
2. Cool, crystallize, and move concentrate to next evaporator. Rinse with condensate from this stage and move to next evaporator (Also part of the Cs Concentration stage).
3. Dissolve slushy salt with condensate and transfer to Salt Washing Stage evaporator.
4. Feed second evaporator at about 1 gpm. Concentrate 4:1.
5. Send concentrate to DWPF CPC.
6. Rinse and send rinse solution to DWPF CPC. Use condenstate.
7. Dissolve slushy salt and transfer back to 1st Cs Concentration evaporator. Use condensate.

SRS

ENGINEERING COMPUTATION SHEET

Sheet No. 1

Title of Project Salt Washing / Fractional / Cryst. Project No.

Subject Hank Elder Computer

Works

Date 3/25/96

Sludge/Sr/Pu Removal

Feed Clarification

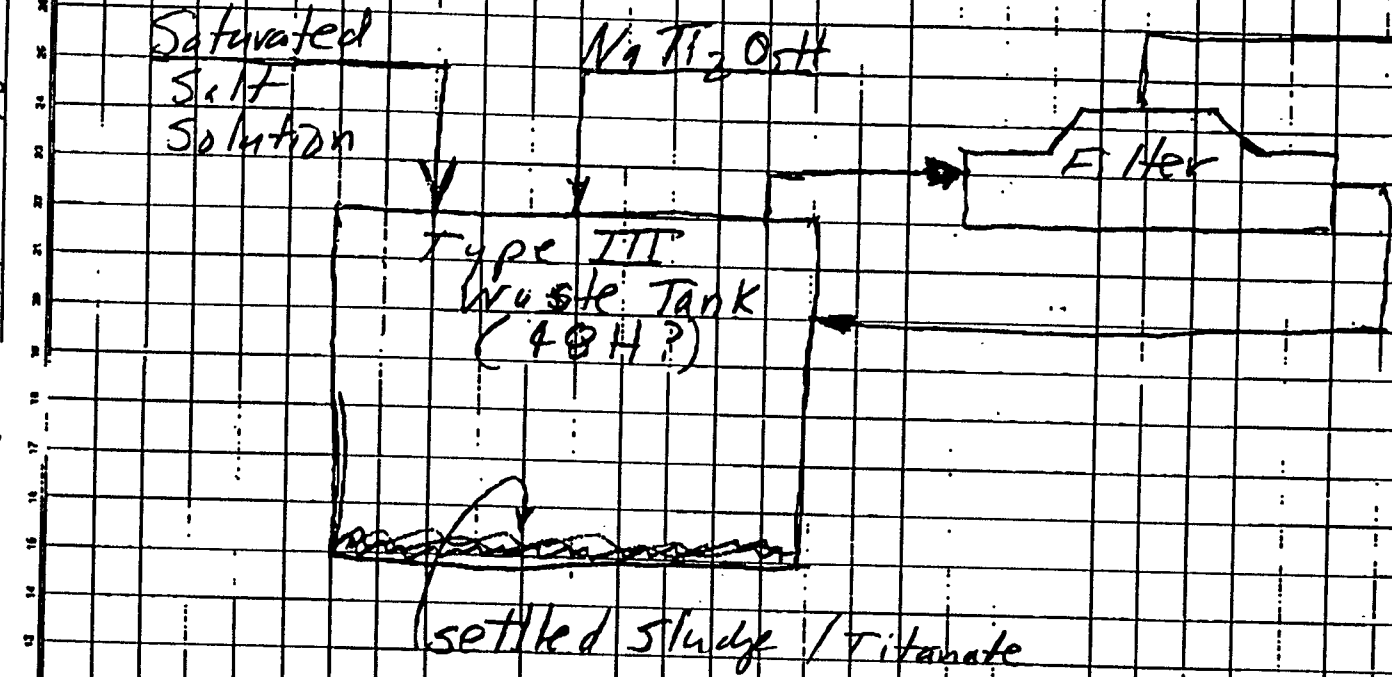

page 2

(A) Filtrate 10 gpm*
2-25 Ci/l
Cs

*When Feed 5 gpm average feed 1/2 time to batch process

Note: If I could draw, I'd be an artist - Not a ChE!

ENGINEERING COMPUTATION SHEET

SRS

Sheet No. 2

Project No. ____ Works ____ Date ____ Computer ____

Title of Project ____ Subject ____

Salt Washing

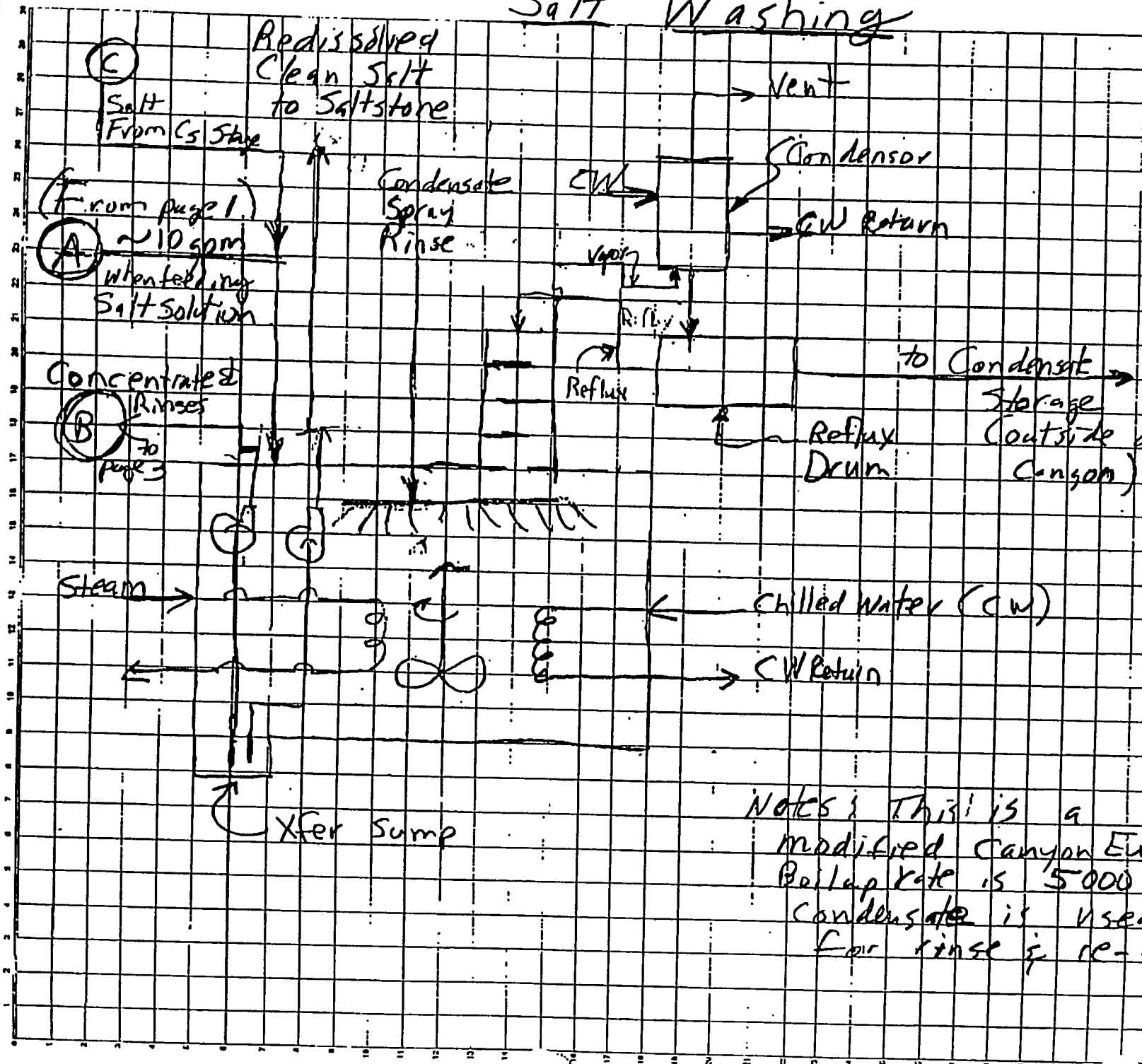

Notes: This is a modified Canyon Evaporator. Boilup rate is 5000 ppm. Condensate is used for rinse & re-dissolution

OSR 25-10 (Rev 6-18-92)
Source: 26-15310.00

Cs Concentration Stage

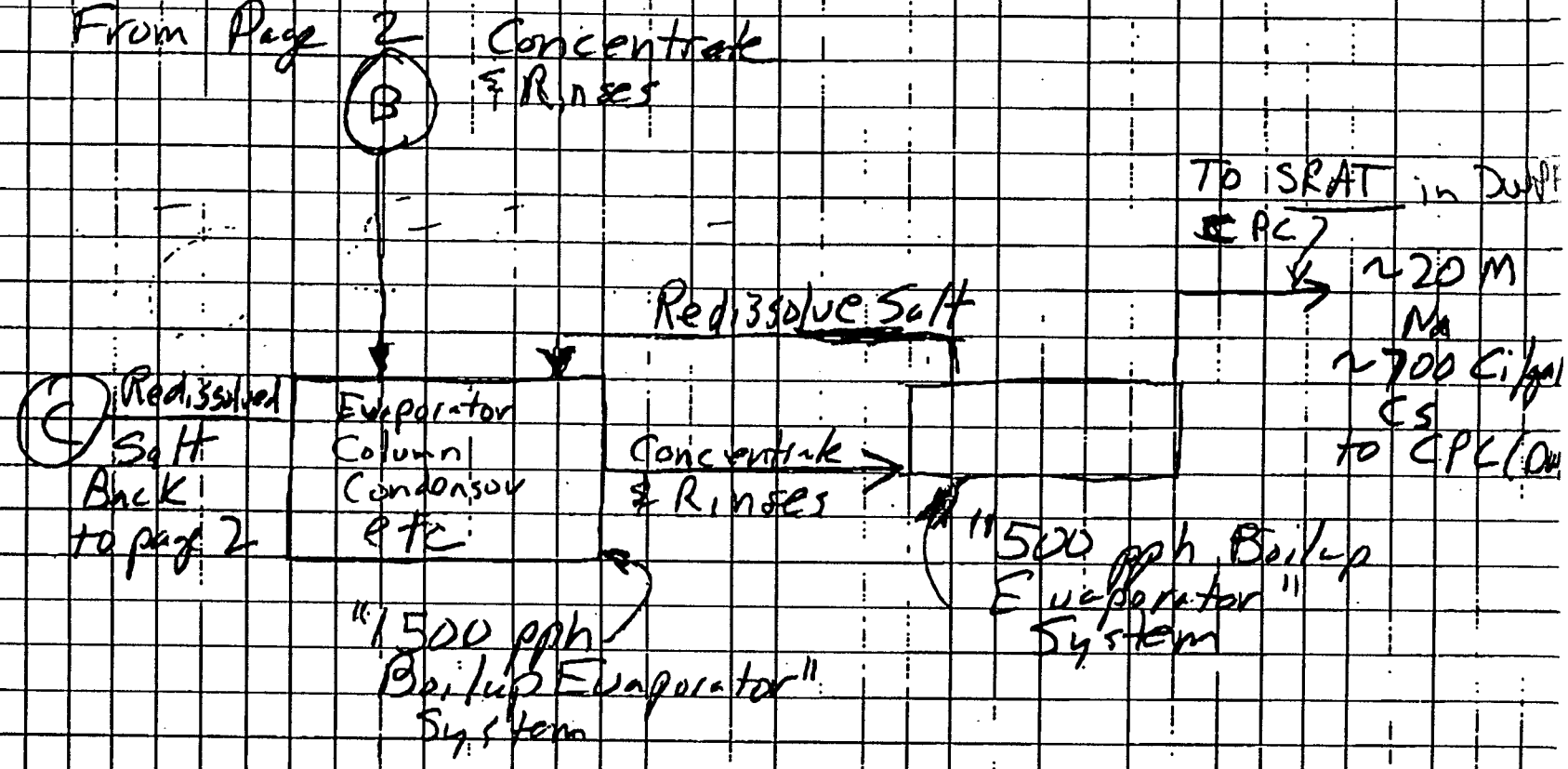

Notes:

Equipment in Boxes much like equipment on page 2, only smaller

Condensate is used for rinsing & redissolution

SRS
Sheet No. 3
ENGINEERING COMPUTATION SHEET
Project No.
Works
Date
Computer
Title of Project
Subject
OSR 25-10 (Rev 6-18-92)
Stock: 26-15310.00

Author: Herbert Elder at SRCCH01
Date: 1/30/98 -11:26 AM
Priority: Normal
TO: Jerome Morin at SRCCA05, Kosephf Ortaldo at SRCCH11, Joe Carter at SRCCH16, Roy Jacobs at SRCCC08, Richard Edwards at SRCCH03, Neil Davis at SRCCA13
Subject: Fractional Crystillazation

HWE 1/30/98

Please see attached Word Version 7 document.

Though my write up appears (on second reading) to be whimisical, this is a serious proposal. Help me identify ~~to~~ the really fatal flaw and it will be given a rest.

Though I called it fractional crytallization, it is really more like refining sugar (at least the very old way), in that the impurity (cesium) is never a solid. I neglected to point out that the stream to DWPF is blazing hot (order of 1000 Ci gallon to get the other alkali low enough) and it would either be diluted for some safety reason (I hope that is not necessary) or DWPF handles hundreds of gallons, not thousands.

Hank

Thanks to [Neil Davis] for the lead.

The purposes of any salt flowsheet is to get the radionuclides somewhere (mainly Cs) safe and the clean salt out of HLW system. That's it. Everything else is just a confusion.

There is a common separation process used in the chemical industry, which might be the way out of town for disposing of our salt waste. This process simple - it is "Fractional Crystallization" and it might work.

In evaluating this, I am sure that the difficulties will be apparent. But remember where we are starting from. [expletives deleted].

This process uses only technology we have used before. No new chemicals are proposed. In principal, none other than water may be needed. I suspect that the most efficient version of this will use something like zeolite [deletion] or CST [deletion] to polish the stream going to Saltstone. [Note: On reflection, bad idea.]

I have gotten far enough to see that it might work, though I was a little disappointed in regard to how big things have to be to make space at a reasonable rate. Had hoped for 100 gallon stages or such like. Another disadvantage is that these crystallizers are energy hogs and have to some degree been replaced in industry by things like precipitation[deletion].

Here is way to implement this:

[deletion] Initial Steps

1. Intentionally react as much TPB in tank 48 as possible and evolve the benzene. The safety basis for this would be that it is a one shot. Do it under N2 in a controlled fashion. I argue that this is tested (full scale) technology.
2. Flush this forward. Perhaps, prior to this you have add the material in tank 49 to 48 to start it down the path to glass.
3. Vitrify the tank 48 / tank 49 blend DIRECTLY. Feed it to the SME. Melt it. Be gone foul TPB. OUT OUT! This, many moons ago was the path for K/CS TPB. However, the glass' capacity for this was only about 10% of the that produced and there were metal crystals present. But this would have much of the organic removed. We know that the a teacup full would not mess any safety or quality thing up. Could we prove that a few hundred gallons unprocessed residual scuz would be OK? If not, run the SPC is some limp along fashion. Anyhow, this could be vitrified in the 1000 or so semi-sludge only cans to go.
4. Clean Tank 48 out, sending rinses to DWPF. Process residue as above. It is not easy, but neither is anything else proposed so far. Hard but straight forward may be a virtue.

[deletion] Washing / Crystallization

This is a counter-current batch process. Overheads should be used for re-dissolution in either the same stage or the one just forward (dirtier).

1. Bring salt solution to Tank 48. Add sodium titanate and filter. This removes soluble Sr, Pu and sludge solids. A filter aid may be needed. At first, it would be good to use supernate from de-watered salt tanks. This gets the Cs moving the right way.
2. Send the filtered salt solution to an evaporator currently free of sludge - Say the RHLWE. Now, new equipment would allow more optimum design but a bird nearly in hand ....
3. Reduce the liquid volume about four fold, send concentrated supernate forward, rinse (with overheads?) concentrate and send concentrate forward. Dissolve salt left (with overheads?) and send dissolved (and somewhat cleaner salt) to NEW agitated canyon like evaporator.
4. Concentrate the salt here and move the concentrated supernate (Cs rich phase) back to the RHLWE. Rinse, concentrate, supernate to RHLWE and dissolve salt. Send to tank 50, send to Saltstone, polish as necessary with zeolite (maybe to caustic?) or other agent (CST). John Fowler told me that Zeolite works in concentrated caustic, if you pre-treat to swell it. At least that is what I thought he said.
5. Concentrated supernate from step 3 goes to new small evaporator. Concentrate, crystallize, move supernate forward, re-dissolved salt back. Use enough stages to get Cs concentration relative to the other alkali high enough so that it can be vitrified without adding too much to waste volume.

My first scoping calcs say it should work. Economics and feasibility are uncertain. Much flowsheet thinking needed. Mabye a totally new facility would be cheapest. Etc.

BUT, it is based entirely on stuff we know how to do. And the safety basis would be simpler than most processes.

HLW SALT DISPOSITION PROCESS ALTERNATIVES

Alternative #: CR3 Sponsor: _____

Title: Salt Separation by Fractional Crystallization

Description: High-level waste supernatant liquid is acidified and then processed through a series of fractional crystallization stages to separated the bulk of the sodium salts (primarily sodium nitrate) from the radioactive waste. Two product streams are produced; a concentrated supernatant liquid containing all of the radioactive components (e.g., Cs-137, Sr-90, tranuranics) and a non-radioactive sodium salt product. After salt removal, the more concentrated radioactive waste stream is sent directly to the DWPF for vitrification or treated to further concentrate the radioactive components. The sodium salt product stream is dissolved in water treated in an electrochemical salt splitting reactor to recover clean sodium hydroxide and nitric acid. The nitric acid is recycled to acidify waste for fractional crystallization. Sodium hydroxide is recycled onsite as a corrosion inhibitor and for leaching aluminum from sludge wastes.

Reference: D. L. Herting, "Clean Salt Process Final Report," WHC-EP{-0915, Westinghouse Hanford Company, Richland, WA, September, 1996.

Technical Maturity: Fractional crystallization is a mature industrial process. Application of the technology to radioactive wastes is limited to bench-scale demonstrations.

Advantages: Physical separation process does not introduce new chemicals into the HLW system . Reduces low-level waste volume by recovery sodium hydroxide and nitric acid chemicals.

Disadvantages: Requires new facility capable of handling acidic solutions. May result in higher solids content in the cesium-137 fraction of HLW sent to the DWPF (i.e., produce more glass).

Safety Issues: Criticality safety may be an issue depending on scale of equipment.

Key Initial Tests: Conduct pilot-scale testing with equipment designed for remote operation. Determine if filtration stage is needed prior to fractional crystallization as a result of solids formation upon acidification of supernatant liquid.

Process Diagram:

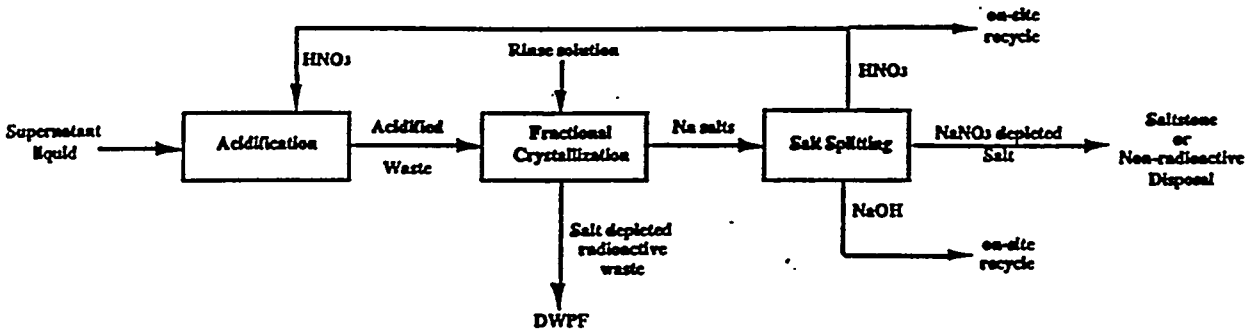

Alternative #: CR 4 Sponsor: David Hobbs

Title: Salt Separation by Fractional Crystallization

Description: High-level waste supernatant liquid is acidified and then processed through a series of fractional crystallization stages to separated the bulk of the sodium salts (primarily sodium nitrate) from the radioactive waste. Two product streams are produced; a concentrated supernatant liquid containing all of the radioactive components (e.g., Cs-137, Sr-90, tranuranics) and a non-radioactive sodium salt product. After salt removal, the more concentrated radioactive waste stream is sent directly to the DWPF for vitrification or treated to further concentrate the radioactive components. The sodium salt product stream is dissolved in water treated in an electrochemical salt splitting reactor to recover clean sodium hydroxide and nitric acid. The nitric acid is recycled to acidify waste for fractional crystallization. Sodium hydroxide is recycled onsite as a corrosion inhibitor and for leaching aluminum from sludge wastes.

Reference: D. L. Herting, ÒClean Salt Process Final Report,Ó WHC-EP{-0915, Westinghouse Hanford Company, Richland, WA, September, 1996.

Technical Maturity: Fractional crystallization is a mature industrial process. Application of the technology to radioactive wastes is limited to bench-scale demonstrations.

Advantages: Physical separation process does not introduce new chemicals into the HLW system. Reduces low-level waste volume by recovery sodium hydroxide and nitric acid chemicals.

Disadvantages: Requires new facility capable of handling acidic solutions. May result in higher solids content in the cesium-137 fraction of HLW sent to the DWPF (i.e., produce more glass).

Safety Issues: Criticality safety may be an issue depending on scale of equipment.

Key Initial Tests: Conduct pilot-scale testing with equipment designed for remote operation. Determine if filtration stage is needed prior to fractional crystallization as

a result of solids formation upon acidification of supernatant liquid .

Process Diagram:

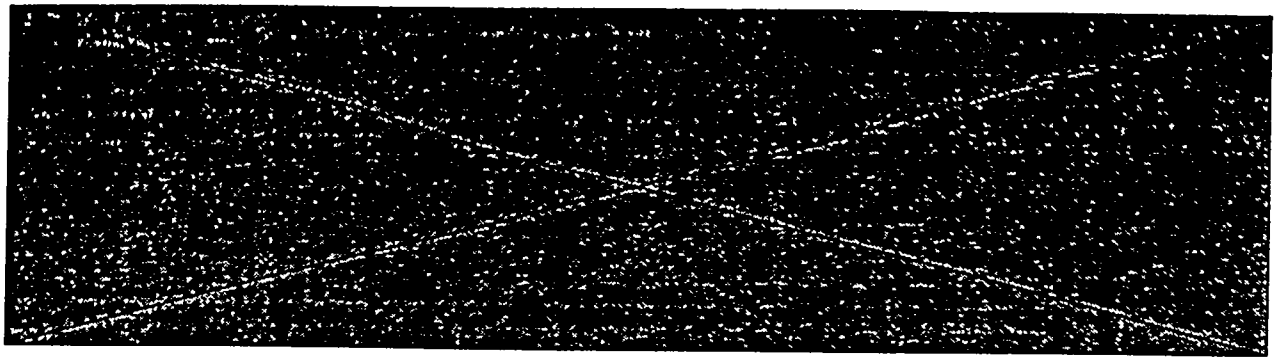

HLW SALT DISPOSITION PROCESS ALTERNATIVES

Alternative #: CRS **Sponsor:** Ken Rueter **Date:** 3/27/98

Originator: Ken Rueter **Phone #:** 8-7430

Title: Selective Fractional Crystallization of Salts

Description: Because of the solubility difference of the different salts in the waste stream, a continuous crystallizer unit along with a filtering/separation device would be installed to selectively remove the NA & K salts.

Technical Maturity: Batch & Continuous Processes Industrially Applied. Application in Radiochemical process environment unproven

Safety Issues: Volatizing Radioactive Waste, Significant Number of Radioactive Material Transfers

Advantages: Minimal or No Chemical Additions Required, Crystallization Unit Operations well understood commercially, Takes Advantage of Physical Properties of Material (Solubility), Utilizes Basic and Mature Unit Operations Principles.

Disadvantages: Series of Unit Operations and Processes Steps Required to Reach End Product State, Not Well Understood within Radioactive/Chemical Waste Processing, Crystallizer Requires Higher Levels of Preventative Maintenance.

Process Diagram (Optional)

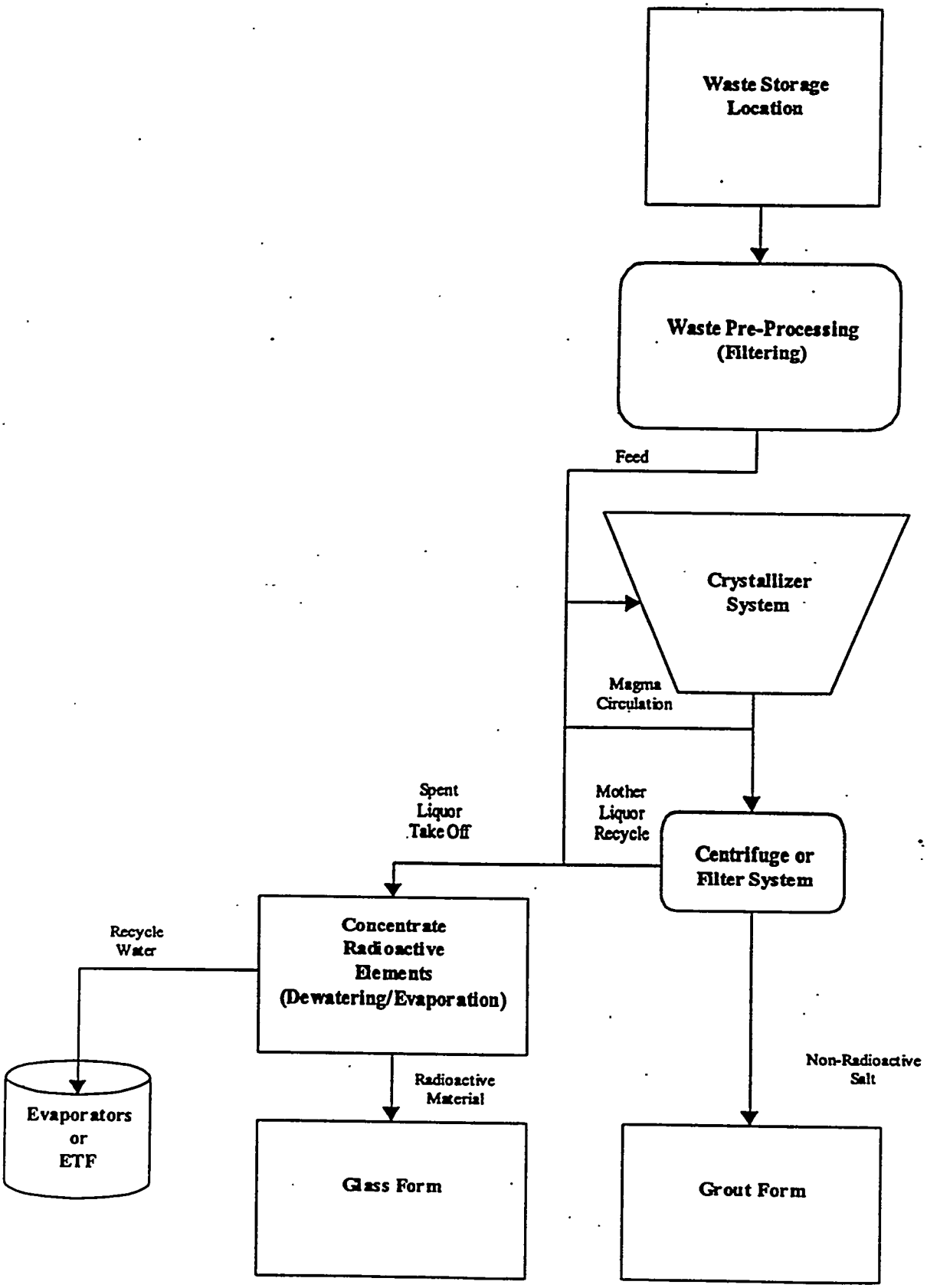

HLW SALT DISPOSITION PROCESS ALTERNATIVES

Alternative #: EC1 **Sponsor:** PETER HUDSON **Date:** 3/23/98

Originator: PETER HUDSON / DAVID HOBBS **Phone #:** 5-6308

Title: Electrochemical destruction of nitrates and nitrites, combined with sodium hydroxide recycle

Description: "HLW salt" consists mainly of hydroxides, nitrates and nitrites of sodium. If these could be destroyed and/or removed from the system, the residual minor salts containing the radioactive cesium could be concentrated and sent to DWPF for vitrification with the sludge. This can be achieved by electrochemical destruction of nitrates and nitrites (forming N_2 and some NH_3), leaving sodium hydroxide which can be removed electrochemically from the system and recycled for use in the Canyons and High Level Wastes.

Technical Maturity: It is understood that similar processes are operated commercially. This specific application has been tested at bench scale using TFA funding.

Safety Issues: Release of ammonia from the nitrate/nitrite destruction step will need careful attention.

Advantages:
- Recovers a valuable reagent (sodium hydroxide) instead of disposing of it.
- Eliminates the need for saltstone.
- Electrochemical processes should be easily maintainable in a nuclear application.

Disadvantages:
- Further development needed.
- Significant additional capital cost.
- Higher salt loading on DWPF - more canisters produced.
- New glass formulation needed.

Remove Nitrate, Nitrite and Sodium Prior to ITP

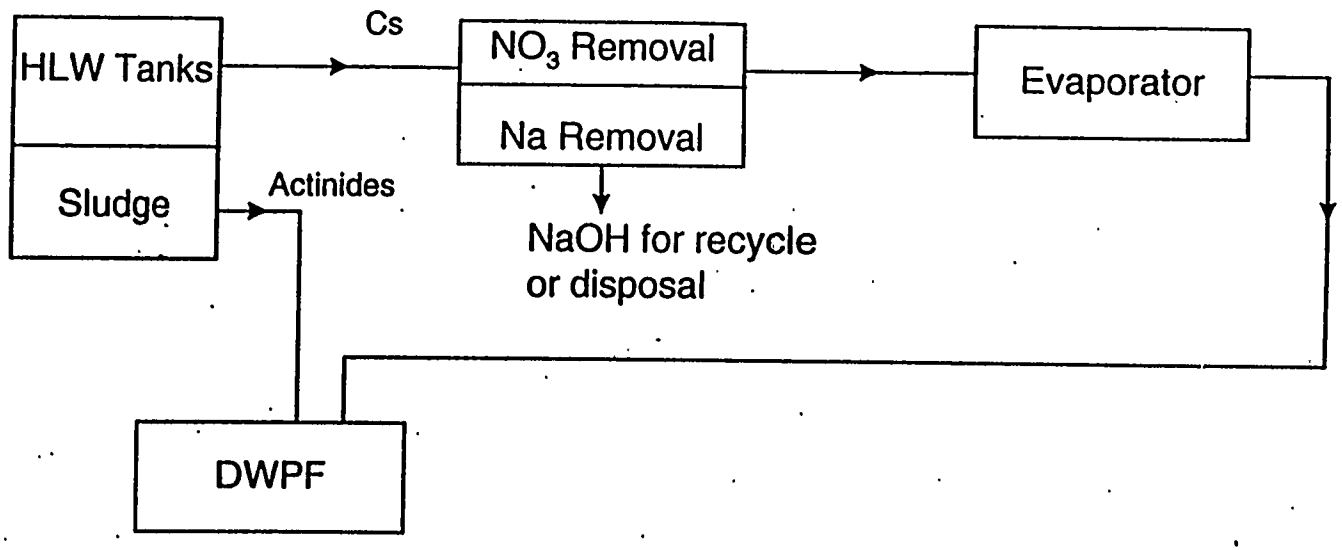

N.B. Both the nitrate/sodium removal step and the subsequent evaporator are both MA/HA plants.

Electrochemical Salt Splitting

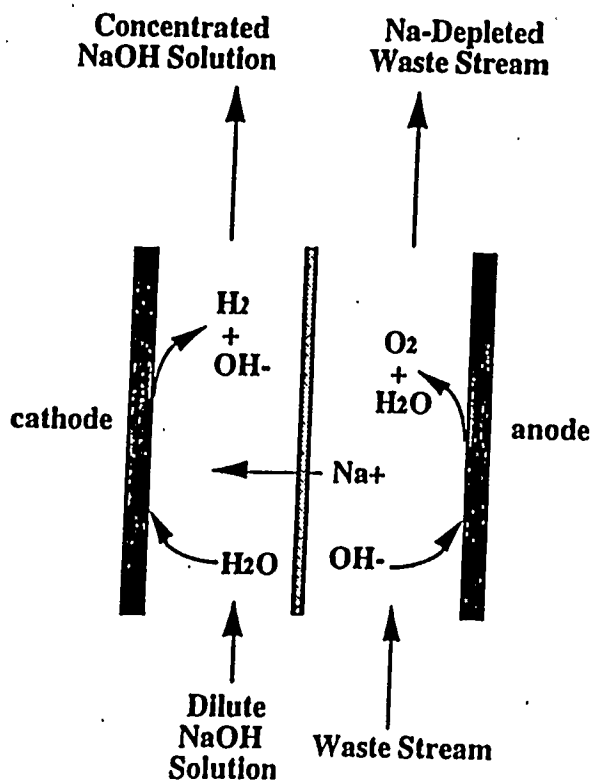

Electrochemical Denitration

- Reduce NO_3^-/NO_2^- to nitrogen-containing gases that are subsequently separated from bulk waste stream
- Net chemical conversion

$$NaNO_3/NaNO_2 \longrightarrow NaOH$$

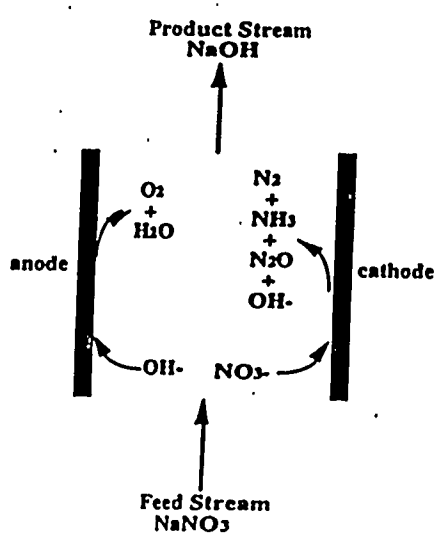

Alternative #: EC2 Sponsor: David Hobbs

Title: Cesium Separation by a Multistaged Electrochemical Membrane Process

Description: This salt disposition process features a multistaged electrochemical separation process to produce two products, (1) a small volume alkaline solution enriched in cesium and depleted in other metals and salts and (2) a large volume alkaline salt solution depleted in cesium. The separation of cesium from the alkaline waste solution is accomplished using an electrochemical reactor equipped with a Nafion" membrane. Upon polarization of the reactor, cations migrate across the membrane into the product compartment. Monocharged ions (i.e., alkali metals) are transported much more rapidly than multiply charged ions. Among alkali metals, cesium is transported faster than sodium and potassium enabling the enrichment of cesium relative to sodium and potassium in the product stream. Because of the high molar concentration of sodium and potassium relative to cesium, a multistage process will be required to effect the separation and minimize volume of the cesium enriched product stream.

References:

A. Eisenberg and H. L. Yeager, editors, Perfluorinated Ionomer Membranes, ACS Symposium Series 180, American Chemical Society, Washington, DC, 1982.

D. T. Hobbs, ÒRadioactive Demonstration of Caustic Recovery from Low-Level Alkaline Waste by an Electrochemical Separation Process,Ó WSRC-TR-97-00363, April, 1998.

Technical Maturity: Nafion" equipped electrochemical reactors are widely used in large scale commercial plants for the production of chorine and caustic (chlor-alkali industry). Technology has not be applied to the separation of cesium and sodium.

Advantages: Process does not require the additon of process chemicals to effect necessary separation. Process does not add any new chemicals to wastes disposed in DWPF or Saltstone. The cesium enriched product stream would contain only trace quantities of other metals.

Disadvantages: Application of technology has not been demonstrated in a high

radiation environment.

Safety Issues:

Key Initial Tests: Determine service life of organic-membrane under high radiation conditions. Determine number of stages needed to effect necessary enrichment.

Process Diagram :

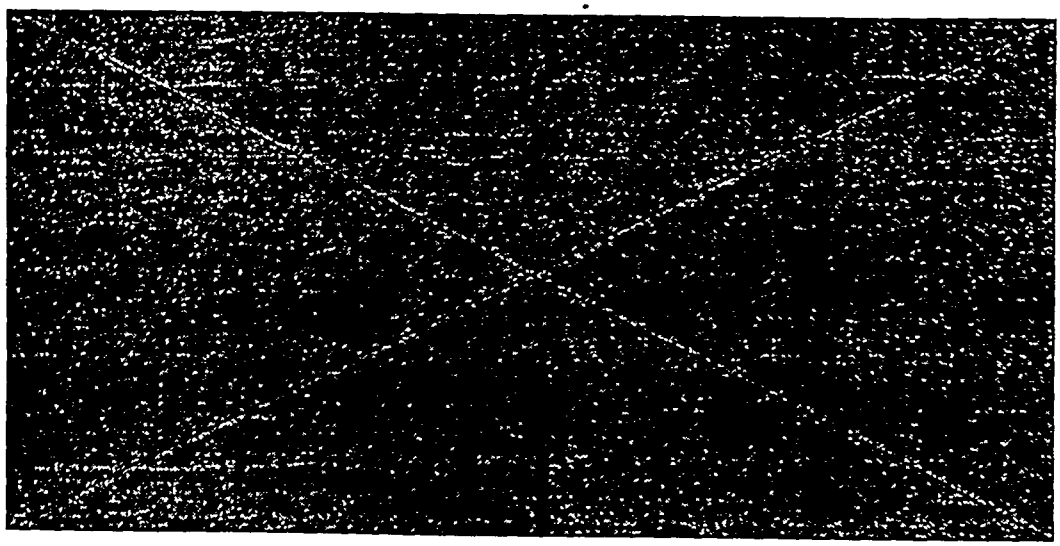

HLW SALT DISPOSITION PROCESS ALTERNATIVES

Alternative#: EC3 Sponsor: J. P. Morin Date: 3/1798

Originator: J. P. Morin Phone #: 83214

Title :Electrodialysis

Description:
In electrodialysis, the concentration and/or composition of electrolytic solutions is altered as a result of electromigration through membranes in contact with these solutions. Electrodialysis units are stacks or stages of cells through which the feed and diluate solution pass. These cells are separated by ion-selective membranes which, under electric potential, provide for selective migration of ions thereby depleting the concentration of target ions in the feed and enriching the target ions in the effluent. Present applications of electrodialysis technology has led to the ready availability of mechanically sturdy, highly conductive cation- and anion-selective membranes. This availability has opened new possibilities for the design of processes requiring this type of separation.

Technical Maturity:
Electrodialysis is in wide commercial use for desalinization of sea water and in medical kidney dialysis. A number of membranes are available for a wide variety of cations and anions. This author is not personally aware that selective membranes for cesium exist, but David Hobbs has seen some cesium enrichment in the commercial membranes he has been using for caustic recycle. Prior application in radiation environment is probably very limited.

Safety Issues:
There may be a safety issue associated with electochemically-formed hydrogen under abnormal operation but is well within the experience of other users of this technology.

Advantages:
This alternative offers the possibility of an efficient, compact continuous process. Cesium removal is achieved by electrochemical inorganic exchange reactions which are controlled by application of low voltage. No phase changes occur. Apart from the membranes, the unit operations are very basic.

Disadvantages:
Ion-selective membranes are the most sensitive part of the unit. Their lifetime is considerably shorter than the rest of the system, even for the most durable ones available. Radiation may further reduce membrane lifetime. Membranes can foul and are sensitive to deposition of scale, requiring replacement or chemical cleaning.

HLW SALT DISPOSITION PROCESS ALTERNATIVES

Alternative #: EC 4 Sponsor: Ken Rueter Date: 3/27/98

Originator: Ken Rueter Phone #: 8-7430

Title: Electrochemical Separation of Salts

Description: A Series of Electrochemical Cells would be installed to selectively remove the NA & K in the form of NAOH & KOH.

Technical Maturity: Continuous Process Industrially Applied. Application in Radiochemical process environment only worked at the pilot level

Safety Issues: Electrolytic Action on Radioactive Waste, High Energy Potential Environment, Caustic Handling & Storage Hazards, Potential Generation of Hydrogen & NOx Gases.

Advantages: Minimal or No Chemical Additions Required, Electrochemical Operations well understood commercially, Takes Advantage of Physical Properties of Material (Ionic), Near Product Quality Generation of NAOH & KOH

Disadvantages: May Require Multiple Cell Banks to Address K vice NA and reach Required Production Rates, Not Well Understood within Radioactive/Chemical Waste Processing, Electrochemical Cells Require Higher Levels of Preventative Maintenance, High Energy Costs per Unit of Product Generated.

Process Diagram (Optional)

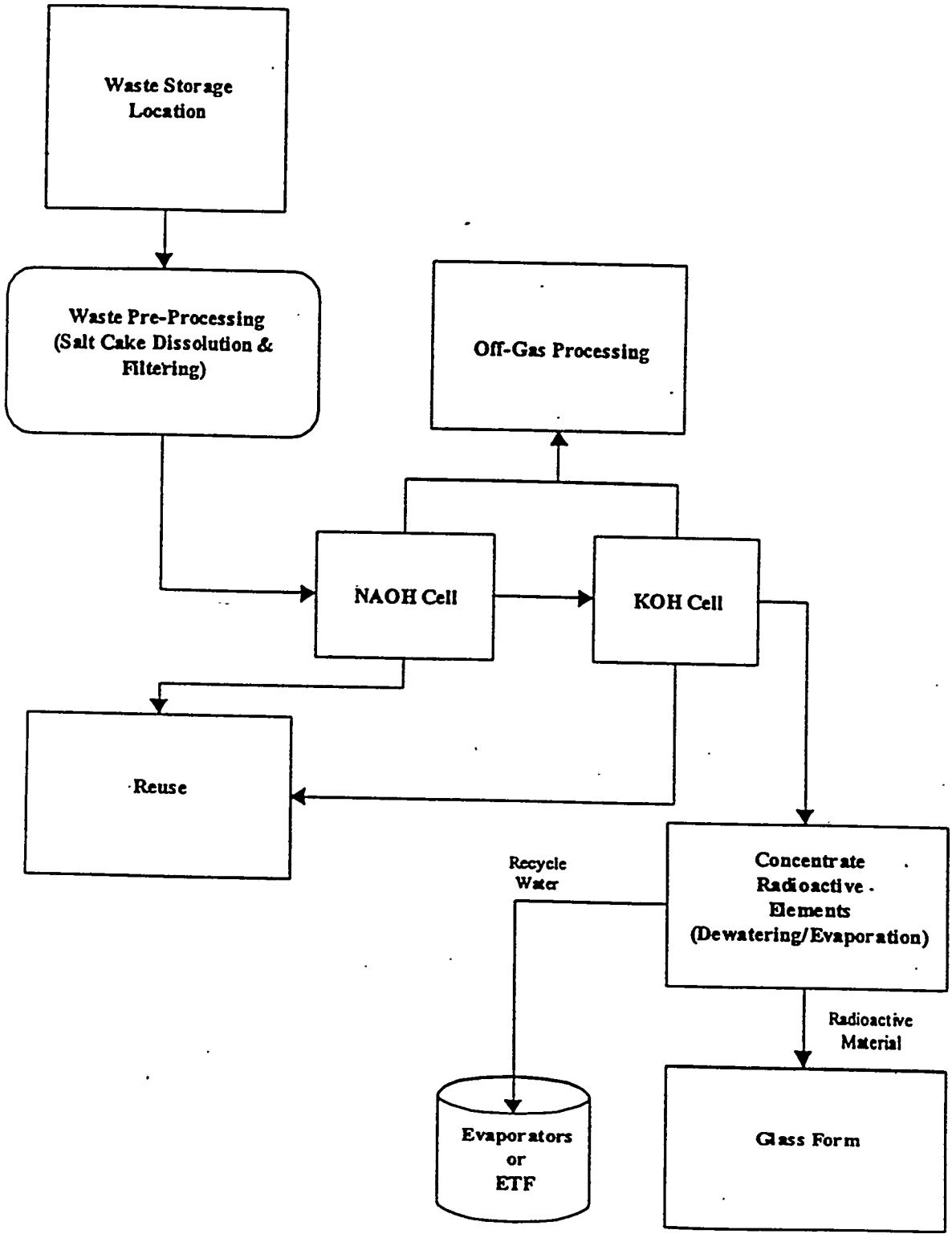

HWL SALT DISPOSITION PROCESS ALTERNATIVES

Alternative #: EC5 **Sponsor:** Jack Watson

Title: Electrolytic separation of Na from everything else

Description: Sodium permeable ceramic membranes are available that could be used to remove the bulk sodium from the supernate. Unlike most organic cation permeable membranes, these membranes pass sodium selectively over cesium, and the selectivity is believed to be relatively good. Sodium is the most abundant cation in the supernate; so removal of the sodium for sending to low-level grout would reduce the HLW glass produced to a quantity less than that produced from vitrification of the supernate. Removal of the sodium would also reduce the pH of the remaining supernate. Possible advantages of lower pH and the potential use of additional IX materials is discussed in a separate form. At Hanford, considerations have even been considerations given to reuse of caustic produced in this manner on site or off site. This could also be combined with nitrate destruction in electrolytic cells.

Technical Maturity:
Limited testing has been done at PNNL and at SRTC with small membrane areas. This idea hasn't progressed beyond lab-scale testing.

Safety Issues All such electrolytic cells can generate hydrogen and/or oxygen at different electrodes, and those electrode chambers have to be flushed with inert gas.

Advantages: Another way to remove the bulk salt from supernate. Could produce a useful caustic solution.

Disadvantages:
Not a mature technology. Electrode life could be short. Solids form in the unit as the pH of the bulk stream is lowered; solids could affect membrane performance.

Process Diagram (Optional)

INCLUDED IN EC4

HLW SALT DISPOSITION PROCESS ALTERNATIVES

Alternative #: VT 1 Sponsor: Date: 25 March 1998

Originator: Paul D. d'Entremont Phone #: 208-8727

Title: Vitrify Salt In Situ

Description: PNNL has developed technology for vitrifying waste sites In-Situ. Electrodes are placed in the ground and current is established between them to put heat into the ground. This proposal is to develop a similar process for waste tanks. Glass formers would be added to the tank, electrodes would be inserted, and then current would be passed through the waste to make glass. The tank itself could be used as one of the electrodes.

Technical Maturity: Highly Conceptual.

Safety Issues: Waste may contain compounds that would become unstable when heated and dried. Also, process could destroy the tank wall and lead to large releases of waste.

Advantages: Waste is left in the tanks. No need to build new processing plants.

Disadvantages: Would be difficult to accomplish with tanks with cooling coils.

HLW SALT DISPOSITION PROCESS ALTERNATIVES

Alternative #: VT2 Sponsor: Hank Elder Date: 3/26/98

Originator: ?????? Phone #: 803-208-6049

Title: Vitrification of Salt Waste

Description:
(1) Pre-treat Salt with NaTi2O5H to remove soluble Pu and Sr and filter.
(2) Vitrify Salt solution with feed chemicals (SiO2, B2O3, Al2O3) in a low temperture melter .

Glass loading would be about 25% salt - limited by Na2O loading. Durability would be much less than DWPF benchmark (EA) glass. This is acceptable because cesium only glass is innocuous after 300-600 years. Canisters would be stored on site in some inexpensive method. Concrete culvert in ground would do.

Technical Maturity: SRS can vitrify this material using existing technology. There would be some work on formulation of glass.

Safety Issues: The institutional acceptance of low durability glass to be stored on-site is an issue. Process would be comparable to sludge only operation. Radionuclide loading would be low (~1000 Ci/can) and about 300 R/hr shine.

Advantages: SRS can use existing technology to do this. Safety Basis is easy to establish.

Disadvantages: While unit cost would be low, would take order of 130,000 (!!!!!) DWPF size canisters [1.8 Metric tons glass in each] to vitrify all the salt. Unless there is away to remove much of the salt from the stream, this is DOA. It might be a supplemental process if DWPF very available. "Licensing" issues would consume 111.8 lifetimes of work. Based on scoping calculations, I would wad this proposal up into a little ball and throw it away.

HLW SALT DISPOSITION PROCESS ALTERNATIVES

Alternative #: VT3 **Sponsor:** Gary Abell **Date:** 3/16/98

Title: DIRECT Feed to DWPF

Description: Send the contents of HLW salt solution directly to DWPF for vitrification. This may require a change to DWPF WAC and some plant mods

Technical Maturity: This approach would NOT require new technology but may require some mods to feed directly to DWPF

Safety Issues: No New Safety issues Expected

Advantages: Expected to have competing life cycle cost when processing costs and reduced grout ~~tot~~ vaults are factored in.

Disadvantages: Would require a ten fold increase in the number of canisters produced (60,000 vs 6,000)

NO Sketch

HLWALTFM:PIH/Rev 1
3/11/98

EXPLANATORY NOTES FOR "ALTERNATIVES PRO-FORMA"

Alternative # will be provided by Peter Hudson.

Sponsor could be originator, a suitable "champion" or a core team member.

Date - Date submitted.

Title should capture the key unit operations of the proposed process.

Description should be a single paragraph technical description of the steps involved in the proposed process, clearly identifying where use is made of existing HLW processes/facilities.

Technical Maturity - one of the key criteria in ranking alternative processes. Define the current development status of the process, e.g. theoretical idea; chemistry proven in lab; fully commercialized for non-nuclear applications; full nuclear operation.

Safety Issues - another key criterion. Recognizing that benzene generation became a major safety issue on ITP, what significant safety issues would have to be tackled on this process? e.g. hazardous chemicals, risk of explosion, high temp and pressure.

Advantages and Disadvantages - apart from safety and technical maturity, what are the other principal advantages and disadvantages of the proposed process, e.g. simplicity, cost, operability, use of existing facilities.

Process Diagram (Optional) - If you can, sketch out the principal steps of the process, showing interaction with existing facilities, on the back of the sheet.

Completed Forms should be returned to Peter Hudson, either by e-mail or hard copy to 705-3C. OR FAX ~~7-6~~ 7-6526

OPTIONAL FORM 99 (7-90)

FAX TRANSMITTAL # of pages ▶ 3

Pete Hudson	From Bob Chang
Dept/Agency	Phone # 8-8105
Fax # 7-6526.	Fax # 8-3033

NSN 7540-01-317-7368 5099-101 GENERAL SERVICES ADMINISTRATION

IN PROCESS ALTERNATIVES

Alternative #: VT-4 **Sponsor:** ROBERT CHANG **Date:** 3-23-98

Title: Feed the whole dewatered wastes into melter

Description: The proposed flowsheet is attached. The main difference between the proposed and the existing flowsheets is that the whole supernate (after dewatered) will combine with unwashed sludge waste and send to SPC.

Technical Maturity: ~~The glass chemistry is~~ More ~~also~~ development work is required ~~to~~ for glass chemistry.

- NOx reduction technology is fairly mature technology.
- The impact of new compounds on glass's chemistry and WAC is unknown.

Safety Issues: No hazard problem. However, NOx emission needs to be addressed.

Advantages:
- Fairly mature engineering solution
- Low ~~opera~~ operating cost
- up-front capital investment is much lower than the IX process.

Disadvantages:
- The number of glass canisters produced will increase
- waste contains $NaNO_3$ and Al_2O_3. As a result, Al_2O_3 will cause glass melting temperature to increase and $NaNO_3$ will cause NOx emission to increase.

Before

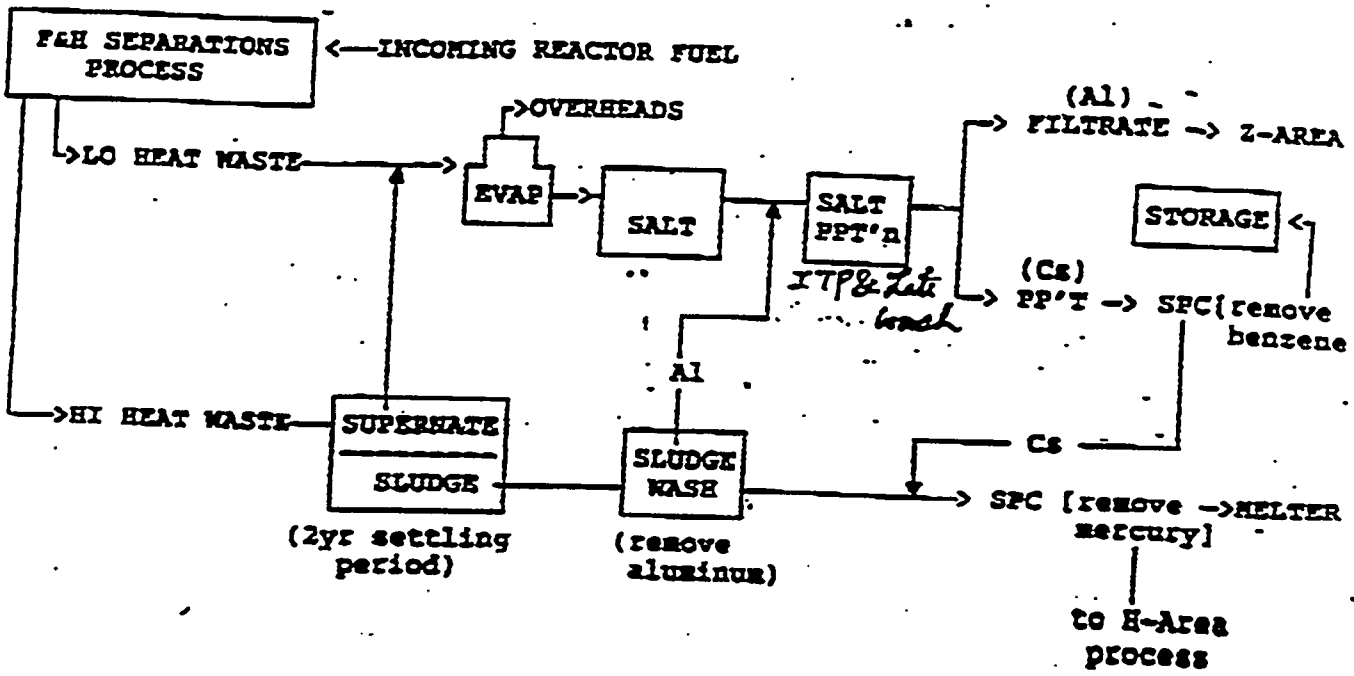

RADIOACTIVE WASTE PROCESSING OVERVIEW

AFTER

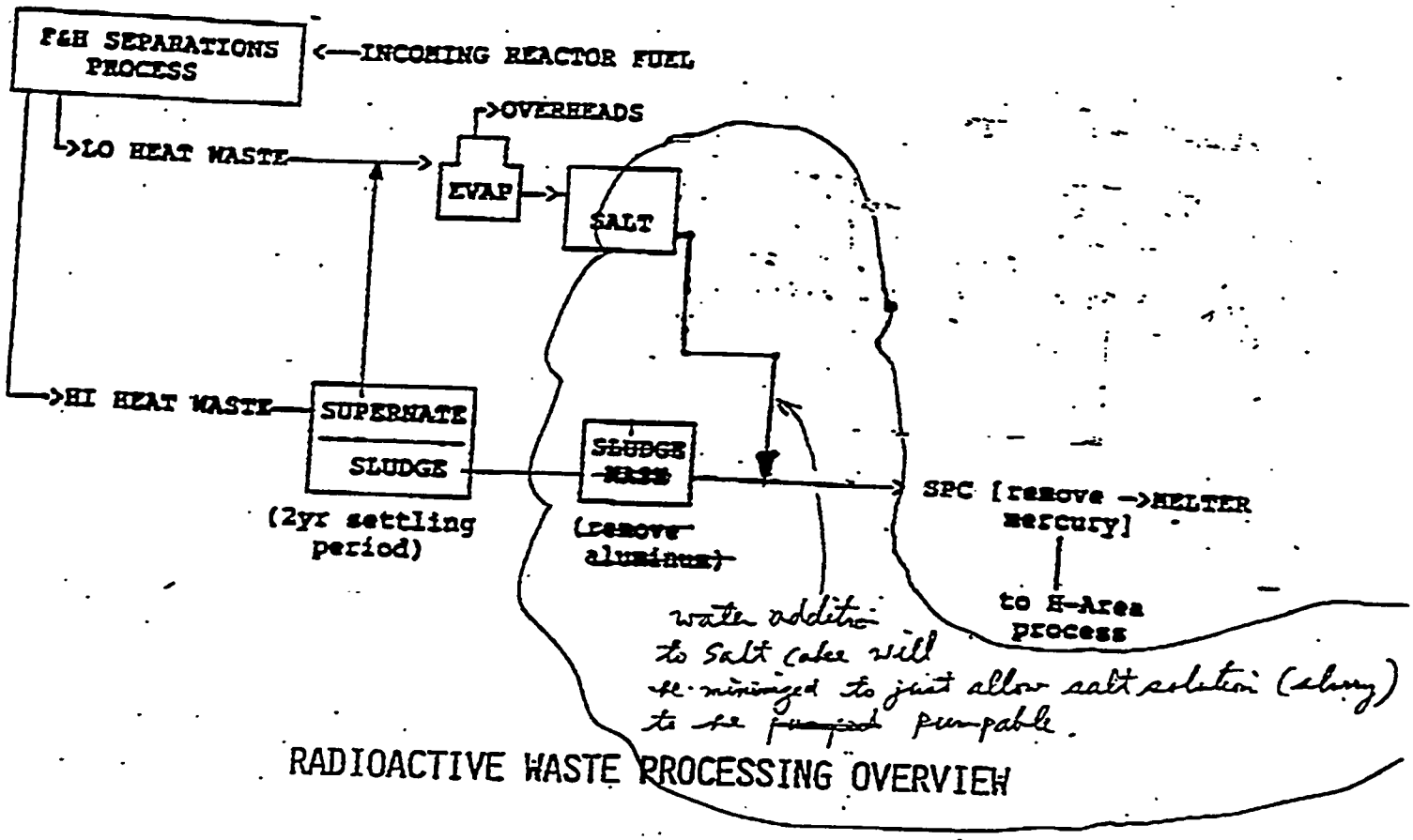

RADIOACTIVE WASTE PROCESSING OVERVIEW

HLW SALT DISPOSITION PROCESS ALTERNATIVES

Alternative #: VT5 **Sponsor:** _____ **Date:** 3 27 98

Originator: Jeff Barnes **Phone #:** B-18615

Title: Wash & Direct Feed to DWPF

Description: Slurry Salt material, wash Na by slurry, settle and decant. Feed washed slurry directly to DWPF

Technical Maturity: Close to current DWPF Flowsheet

Safety Issues: NONE

Advantages: Fewer chemical processes to deplore. (lower cost & complexity)
Technology currently exists.

Disadvantages: Larger Volume of DWPF canisters
Lower Radionuclide Volume per canister

Alternative #: VTG Sponsor: Sam Fink

Title: No Pretreatment Option: Direct Vitirification of all Liquid Waste.

Description: Suggested as bounding cost option.

Reference:

Technical Maturity:

Advantages: Reduction in Salstone produced over life cycle of mission.

Disadvantages: Extended mission life. Extra duty on DWPF. Additional canisters, additional number of melters and vaults needed over life cycle. Note: additional technical issues arise likely leading to retrofitting of the existing off gas and support systems in the DWPF. (Russ Eibling intended to submit a form on this option providing the details. Uncertain if he did.)

Safety Issues

Key Initial Tests: (1) Perform HLWS material balances to determine additional costs for 'no action' case.

Process Diagram (Optional, see reverse side) Not provided.

HLW SALT DISPOSITION PROCESS ALTERNATIVES

Alternative #: ML1 Sponsor: JFO Date: 3/26/98

Originator: J F. ORTALDO Phone #: 8-6086

Title: "DEWATER" SALT TANKS AND BUILD ADDITIONAL TANKS

Description: SALT TANKS WILL BE "DEWATERED" TO REMOVE AS MUCH OF THE Cs-RICH AQUEOUS PHASE AS POSSIBLE; THE AQUEOUS PHASE IS FED TO DWPF; THE "DEWATERED" SALT IS STORED IN THE TANKS; ADDITIONAL SALT TANKS ARE BUILT AS REQUIRED TO PROVIDE STORAGE FOR AQUEOUS WASTE

Technical Maturity: RELATIVELY "LOW TECH"; QUANTITY OF Cs IN AQUEOUS RELATIVE TO SALT PHASE MUST BE DETERMINED; DEWATERING METHOD MUST BE DEMONSTRATED

Safety Issues: CONTINUED STORAGE OF DEWATERED SALT IN WASTE TANKS

Advantages: SHOULD REMOVE A SIGNIFICANT QUANTITY OF Cs FROM TANKS AND VITRIFY IT; IMPLIMENTATION COULD START FAIRLY QUICKLY.

Disadvantages: REQUIRES BUILDING ADDITIONAL STORAGE TANKS AND SOUTH CAROLINA PERMISSION TO DO SO; HIGH CAPITAL COST. DOES NOT ADDRESS VITIRIFICATION OF ENTIRE Cs INVENTORY; MAY COMPLICATE IMPLIMENTATION OF "CAN-IN-CAN" PROGRAM FOR WEAPONS PLUTONIUM PROGRAM

HLW SALT DISPOSITION PROCESS ALTERNATIVES

Alternative #: ML2 Sponsor: JFC Date: 3/26/98

Originator: J. F. ORTALDO Phone #: 8-6086

Title: CALCINE SALT AND STORE CALCINE

Description: SIMILAR TO IDAHO OPERATION. CALCINE SALT TO REDUCE VOLUME AND STORE CALCINED MATERIAL IN SUITABLE FACILITIES.

Technical Maturity: BASICALLY USES IDAHO TECHNOLOGY STORAGE REQUIREMENTS PROBABLY REQUIRE ADDITIONAL EVALUATION

Safety Issues: SHOULD BE MANAGEABLE SINCE SIMILAR TO EXISTING OPERATION

Advantages: USES ESTABLISHED TECHNOLOGY; NO ORGANICS INTRODUCED; EMPTIES WASTE STORAGE TANKS

Disadvantages: DOES NOT PUT Cs AND OTHER RADIONUCLIDES INTO FINAL FORM; HIGH CAPITAL COSTS; TIME DELAYS SIGNIFICANT PERMIT AND "INSTITUTIONAL" ISSUES INTRODUCED; COMPLICATES IMPLIMENTATION OF "CAN-IN-CAN" FOR WEAPONS PLUTONIUM PROGRAM

HLW SALT DISPOSITION PROCESS ALTERNATIVES

Alternative #: ML 3 **Sponsor:** Cussler **Date:** 3/24/98.

Title: Cs^+ Encapsulation in Solid Foam.

Description: Instead of precipitating the Cs^+, encapsulate it as a solution in a solid foam. An emulsion or liquid crystal phase could also substitute for a foam.

Technical Maturity: Poor. This is a new effort, starting from scratch.

Safety Issues: Foam stability may be affected by radiation

Advantages: Immobilizing the Cs^+ does not require Cs^+ chemistry; instead the chemistry of the foam is separate, suitable for any species.

Disadvantages: The volume of the feed is not ~~req~~ reduced; this means more evaporation, reverse osmosis, etc. The whole idea seems somewhat weird.

HLW SALT DISPOSITION PROCESS ALTERNATIVES

Alternative #: ML 4 **Sponsor:** W.L. Tamosaitis

Title: Class C Saltstone

Description: Decontaminate salt feed to some level and send cesium ~~rich~~ depleted stream to saltstone for grouting. Remaining stream with cesium is sent to DWPF via process requirements dependent on separation process.

Reference: Hanford Grout process (now shut down).

Technical Maturity: Orignal Hanford grout process

Advantages: Minimal D.F. needed in pretreatment.

Disadvantages: Regulators; political; philosophy. Still need pretreatment process in addition to political and environmental issues.

Safety Issues: Saltstone heating. Pretreatment shielding. Pretreatment concerns (benzene?).

Key Initial Tests: Engineering calcs needed. Solid stability tests needed especially related to T-48 and late wash.

Process Diagram (Optional, see reverse side):

HLW SALT DISPOSITION PROCESS ALTERNATIVES

Alternative #: ML5 Sponsor: _____ Date: 3/25/98

Originator: Major Thompson Phone: 5-2507

Title: Cesium Accumulating Bacteria on a Fiber Matrix

Description: Two strains of bacteria have been identified which accumulate or precipitate Cs to levels of 92 and 52 mg Cs per gram of dry cells. Clyde Engineering Service of New Orleans has a patent on technology to attach bacteria of this and other types to Tyvek™ fibers to allow easy removal of metals such as Cs from solutions. Oxygen is required for growth of the bacteria although it may be possible that the oxygen could be supplied by the nitrate and nitrite in solution.

Technical Maturity: The technology is at the theoretical stage for Cs in waste. The bacteria have been shown to accumulate Cs in the laboratory with simple solutions, but not under the conditions of HLW salt solutions. Attachment of the specific bacteria to fibers has not been demonstrated, but is assumed to work as with other bacteria that have been demonstrated in the laboratory. The owner of the patent rights is looking for a place to apply the ideas, but no testing has been done. The technical risk is very high since there has been no testing of growth in high salt wastes or in the presence of radiation. The literature does report that the pH for optimum growth is 8.5 which would be a bad range for operation with plant salt solutions resulting in precipitation of Al on neutralization of the highly alkaline waste solutions.

Safety Issues: There are no known safety issues at this time, although further investigation would be required to ensure that the fibers used do not decompose under radiation to produce flammable organic vapors.

Advantages: The bacteria have very high capacity for Cs at 92 mg per gram of dry cells. The technology could be viewed as a "green" technology since the basic reagent comes from nature.

Disadvantages: Fibers are organics which can be damaged by radiation with possible detrimental effects of the process. All the organic material from the bacteria and the fiber matrix would have to be fed to the melter which could affect the redox in the melter and possibly the durability of the resulting glass. Overcoming these effects could require extensive testing and changes to the glass formulation. Risk of failure is high due to unproven state of the technology.

HLW SALT DISPOSITION PROCESS ALTERNATIVES

Alternative #: ML 6 Sponsor: Ken Rueter Date: 3/18/98

Originator: Kinetic BioSystems Inc. Phone #: 8-7430

Title: KBI Centrifugal BioReactor Technology (CBR)

Description: KBI's CBR is a proprietary continuous feed flow BioReactor technology. The process continuously feeds the waste process stream to the Bio-organisms under high pressure while containing the organisms in an extremely high density (Up to 1.0 MM current limits) stabilized fluid bed by applying vertical centrifuge unit operations technology.

See Attached Reference Material from KBI-NV (Note, Vendor Input is Confidential)

Technical Maturity: Lab Proven and Pilot Scale Ready. No Current Mid to Large Scale Industrial Applications

Safety Issues: High Pressure Operation, Placement of High Level Waste in Centrifuge Environment, High Speed Rotating Equipment Hazards

Advantages: Fast Stream Processing Rates, Lower Equipment Costs compared to normal Bio-Reactor Configurations, Smaller Installed Equipment footprint, High Efficiency Process, Reduced Operating Oversight & Interface Requirements

Disadvantages: Identification of Bio-Organism for high ionic waste stream environment and survival of the organisms, Centrifuge Mechanical Design and Application not proven at Industrial Scale, Royalty & Technology Licensing Costs, Company still in venture and start up mode/status, Waste Stream Fluid Rheology effects within a centrifugal operations environment.

Process Diagram (Optional)

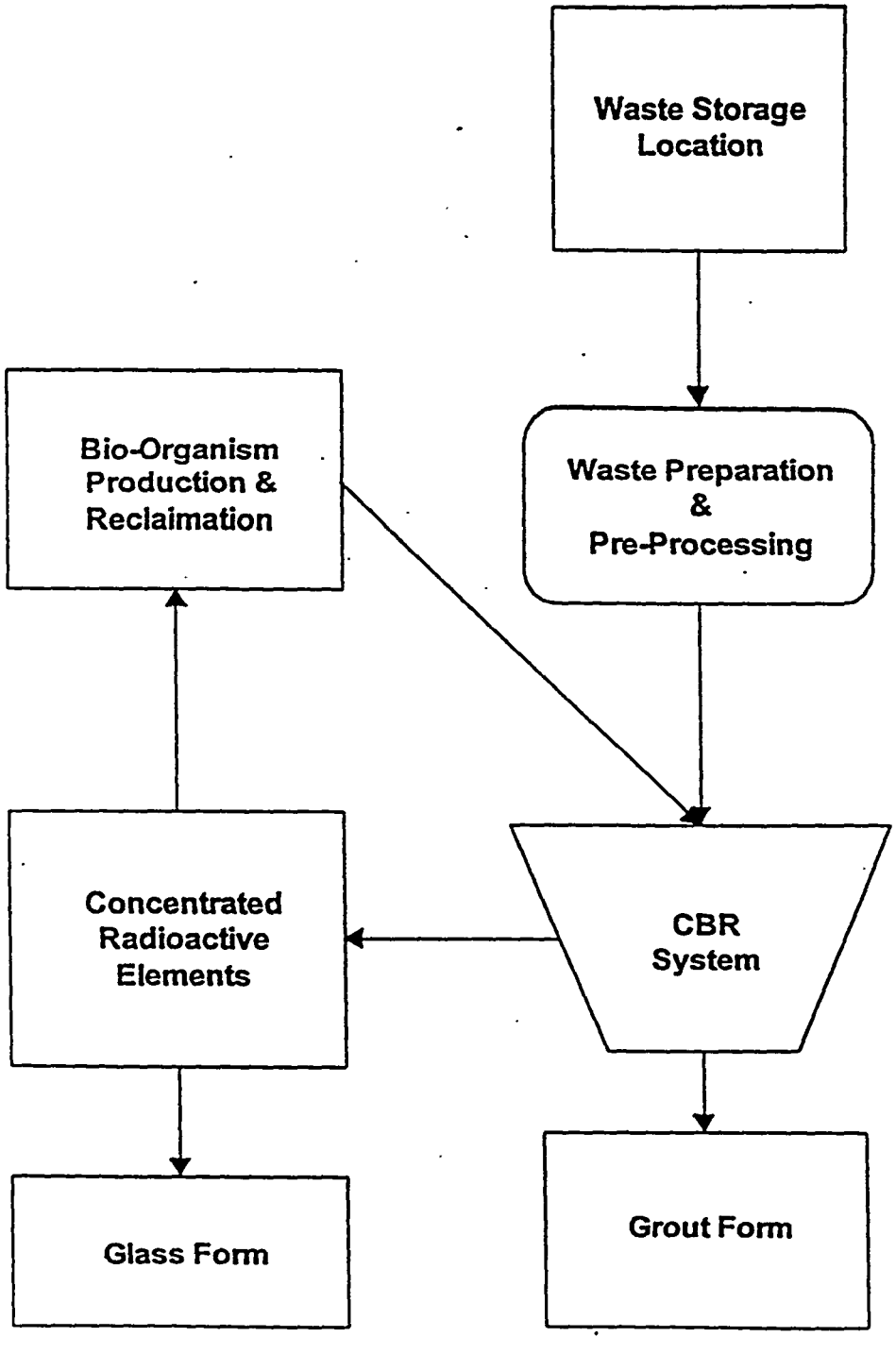

SRUP300

U. S. DEPARTMENT OF ENERGY

SAVANNAH RIVER OPERATIONS OFFICE

ML7

EMPLOYEE SUGGESTION

STAFF MANAGER'S OFFICE

SUGGESTION NO.: 98-14

DATE RECEIVED: 1/29/98

INSTRUCTIONS: Read page two before preparing your suggestion. Forms may be completed by hand or on-line. Submit original to the Staff Manager's Office. Retain one copy for your file.

1. Name of Suggester *(Complete payroll name)*	2. Title and Grade
William L. Stubbs	Nuclear Engineer GS-840-14

3. Organization (DIV-BR-SEC) and Telephone No.	4. Name and Title of Supervisor
Staff 5-4499	Broaden

5. Building and Room No.	6. Title of Suggestion
703-A E146	Disposal of Salt Solution Containing Cs-137 in Saltstone

7. Describe the present situation, condition, or activity which you believe should be changed or improved. (Use plain paper for continuation sheet, if necessary.)

Until recently, the salt solution in the high-level waste tank in F and H Areas was to be treated in the In-tank Precipitation (ITP) Facility with sodium tetraphenylborate to remove the radioactive cesium, and sodium titanate to remove strontium and the uraniums and plutoniums, making the solution low-level waste. It has been determined that the proposed ITP process is not viable because of the lack of understanding of how to keep the tetraphenylborate (organic) compounds and derivatives in the ITP process from breaking down and becoming benzene. As a result, nearly 30 million gallons of radioactive salt and salt solution resides in the waste tanks with no process to disposition them. The high-level waste mission is seriously threatened by this situation considering the time it takes to bring a new facility or process online from conception.

8. Describe your suggestion or invention in detail. Give specific data on the tangible and intangible benefits to the government resulting from manpower or material savings, improved methods, work simplification, accident prevention, or other improvement. (Use plain paper for continuation sheet, if necessary.)

It seems that it is possible to process the salt solution from the waste tanks with sodium titanate (non organic) to remove the strontium, uraniums and plutoniums and dispose of the remaining salt solution (containing the radioactive cesium) in saltstone (concrete). The NRC has requirements for levels of radionuclides that can be disposed of in near-surface disposal facilities such as our Saltstone Facility. The limit on radioactive cesium (Cs-137) allowed by the NRC for this type of disposal is 4600 curies per cubic meter (Class C waste in 10CFR61.55). The salt solution with the highest Cs-137 concentration at SRS would produce saltstone with a Cs-137 concentration of about 1100 curies per cubic meter, less than 25% of the Class C limit. Most of the salt solution would produce saltstone with Cs-137 values well below this. All other components of the high-cesium salt solution satisfy the Class A limits. This option would require modifications to the Saltstone Facility and our environmental permits, but these can be done in far less time and with less money than developing a new process and building a new facility. This option would allow the disposition of salt to continue and the mission to be completed possibly ahead of our current schedule.

9. I understand that this suggestion or invention will be awarded only if adopted by the government either by written notification or through practical application of the idea, within two years of the date of final action on the suggestion. I hereby agree that the use of this suggestion or invention by the United States shall not form the basis of a further claim of any nature upon the United States by me, my heirs, or assignees.

1/28/98	William L. Stubbs		
Date	Signature of Suggester	Signature of Cosuggester, if any	Date

(Tear along this line)

ACKNOWLEDGEMENT OF SUGGESTION

THANK YOU for your suggestion. It will be carefully considered by those who have functional responsibility in the area of your suggestion and you will be advised of the action taken. Your interest in improving governmental operations is appreciated

Refer to Suggestion No. _____

Signature (Staff Manager's Office) _____ Date _____

HLW SALT DISPOSITION PROCESS ALTERNATIVES

Alternative #: ML 7.1 Sponsor: TEAM Date: 4-7-98

Originator: J.L. Barnes Phone #: 7-4466

Title: Grout Disposal of Salt Solution containing Cs 137

Description: Seperate (filter) sludge constituents from salt material (use sodium titanate); 1) send salt slurry directly to Saltstone, 2) send salt slurry to Type I tanks as grout mixture, 3) send salt slurry through grouting process and use all HLW Type Tanks; sludge to DWPF. Consider purpose built facility for processing salt solution

Technical Maturity: 1) Known technology, used in production scale nuclear application. 2) Known technology (see 1). 3) Known technology (see 1)

Safety Issues: 1) None. 2) None. 3) None

Advantages: 1) Facility & capability currently exists. 2) Cost effective use of Type I Tanks, extra steel barrier between material and environment. 3) See 2

Disadvantages: 1) shielding requirements at Saltstone; permitting requirements for Saltstone. 2) capacity of existing tanks insufficient; permitting as final waste form; and Type I Tank disposition conflict. 3) see 2.

(ML 7, MLH2, ML 10)

ML

Process Diagram (Optional)

NONE

HLW SALT DISPOSITION PROCESS ALTERNATIVES

Alternative #: ML 8 Sponsor: Ken Rueter Date: 3/25/98

Originator: US Army Corp of Engineers Phone #: 8-7430

Title: Interstitial Fluid Displacement (IFD) for Preferential Recovery of Cesium from Saltcake

Description: Because of the porous nature of the Saltcake, a fluid displacement method called Interstitial Fluid Displacement (IFD) would be applied to substitute the contaminated supernate in the Saltcake with uncontaminated water.

See Attached Reference US Army Corp of Engineers Technical Report GL-97-September 1997

Technical Maturity: IFD Process Industrially Applied. However, application of IFD for Saltcake decontamination has only been proven at the simulation, conceptual, modeling level.

Safety Issues: Potential for Additional Tank Top Operations Work Activities, Need to Mechanically Manipulate the Saltcake to form collection sumps.

Advantages: Simple Process to Operate and Maintain, IFD Method well understood Commercially, Low Energy & Utility Duty, Minimizes Tank Sampling Requirements, Reduction in Fresh Water Usage

Disadvantages: Approach only addresses the Saltcake not the Supernate (Not a Complete Solution), The process assumes no dissolution of the Saltcake during the displacement process and has not been considered conceptually, Overall the concept at the model level did not achieve the targeted DF, Serious effectiveness and efficiency issues around Saltcake heterogeneity levels relative to media permebilities.

HLW SALT DISPOSITION PROCESS ALTERNATIVES

Alternative #: ML9 **Sponsor:** _____ **Date:** 3-27-98

Originator: Jeff Barnes **Phone #:** B-18615

Title: Salt Dehydration and Encapsulation

Description: Dehydrate salt solution in the storage tanks by cooling and air purges (N_2 purges). ~~Auger the dry salt~~ Decant liquid that bleeds on the surface. Auger the dry salt to a material handling and packaging facility.

Technical Maturity: Dry material handling and packaging widely used in industrial applications.

~~Advantage.~~ ~~Safety Issues:~~ Minimum chemical processing/treatment required.
Industrially proven application
Lower costs to field.

~~Advantages:~~ Safety Issues: Radiological Airborne and Contamination spread concerns increase.

Disadvantages: Larger volume to package and store as compared to precipitation and vitrification.

Process Diagram (Optional)

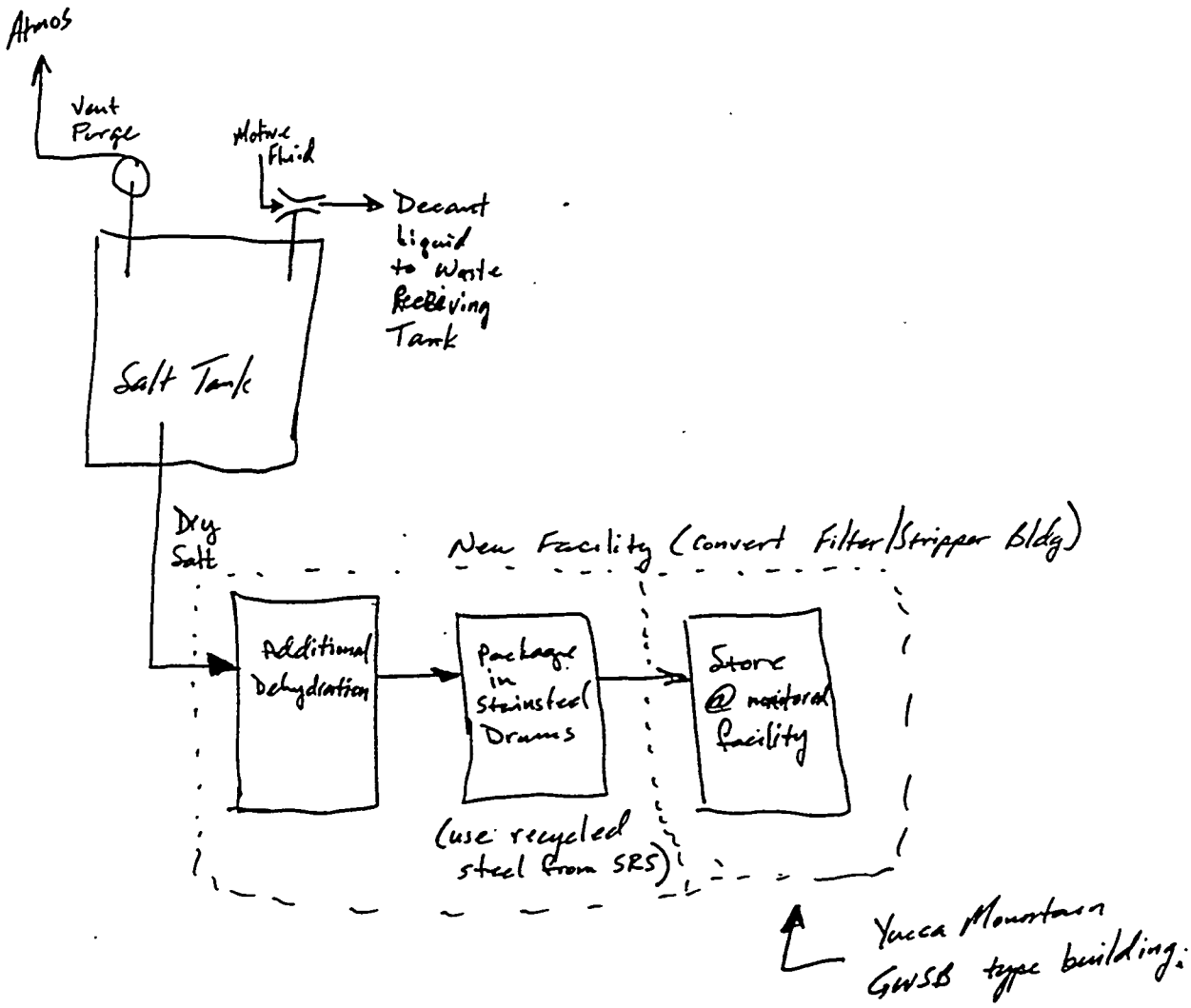

HLW SALT DISPOSITION PROCESS ALTERNATIVES

Alternative #: ML9.1 Sponsor: TEAM Date: 4-7-98

Originator: J.L. Barnes Phone #: 7-4466

Title: Salt Dehydration and encapsulation with TRU going to WIPP

Description: Dehydrate salt solution in the storage tanks by cooling and air/N_2 purges. Decant liquid that collects on surface to waste tanks. Auger dry salt material to a dry material handling and packaging facility. Liquor goes to DWPF. Dry material packages transferred to WIPP as TRU waste.

Technical Maturity: Dry material handling and packaging widely used in industrial applications.

Safety Issues: Radiological airborne and contamination concerns increase.

Advantages: Minimum chemical processing/treatment required. Industrially proven technology. Lower costs to field.

Disadvantages: Larger volume to package and store as TRU waste at WIPP.

[ML9]

Process Diagram (Optional)

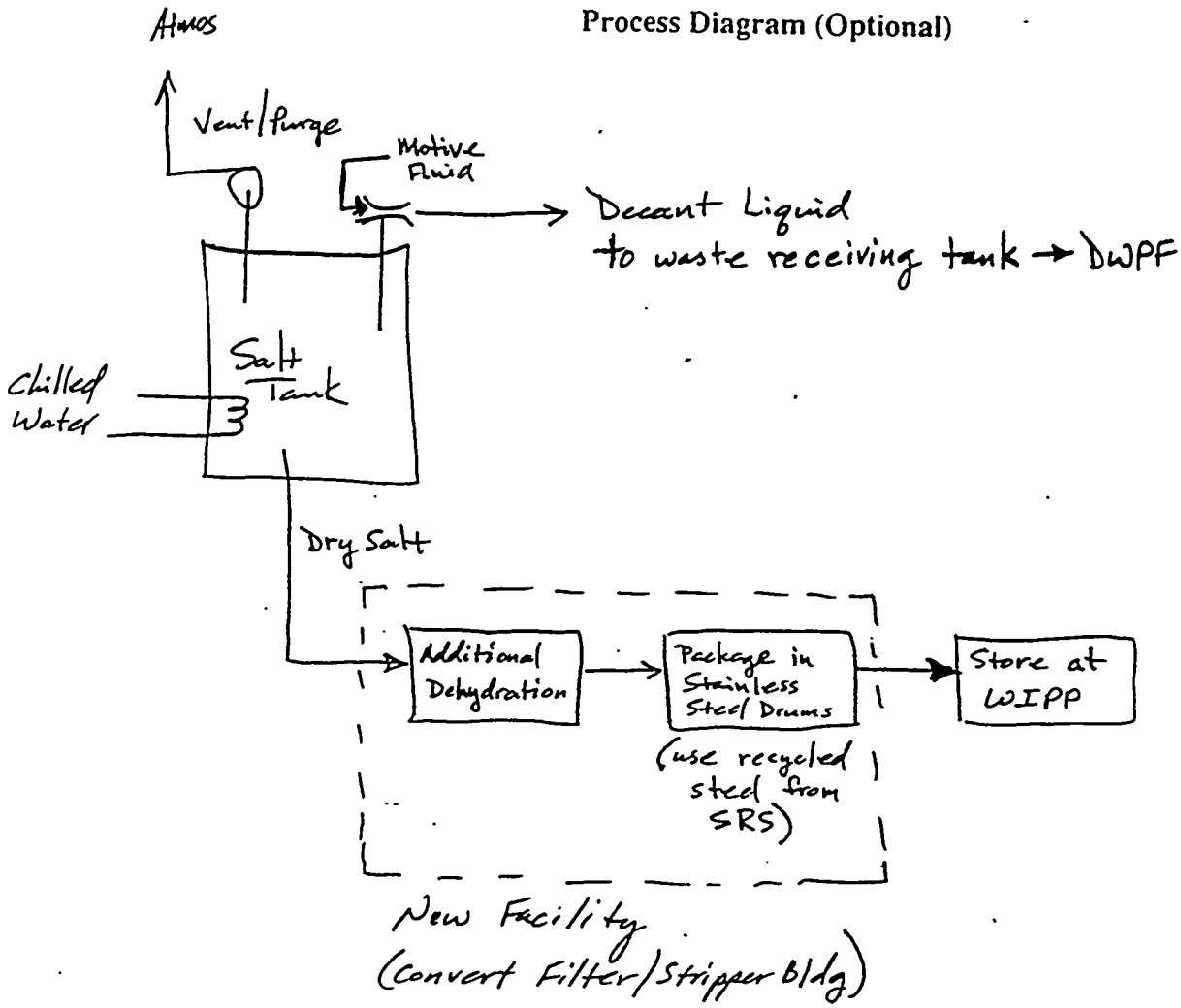

HLW SALT DISPOSITION PROCESS ALTERNATIVES

Alternative #: ML10 **Sponsor:** John Carlson **Date:** 3/27/98

Title: In Situ Grouting of Salt Within the HLW Tanks

Description: It is proposed that In Situ Grouting of HLW Tanks be considered. Conceptually, an appropriate grout mix could be designed such that the salt would be immobilized within the HLW Tank and would take advantage of the steel tank as the primary barrier against water intrusion. In addition, the annulus area of the tank could be grouted to provide a secondary barrier for release of radioactive material to the environment.

Technical Maturity: Currently, advanced grout designs are being used at SRS for tank closure.

Safety Issues: None

Advantages: Do not have to remove salt and process the salt to DWPF. Huge cost savings.

Disadvantages: Must be able to change the permit criteria to allow permanent disposal in this manner. Problems with NRC, DOE, SC DHEC approvals.

HLW SALT DISPOSITION PROCESS ALTERNATIVES

Alternative #: ML 11 **Sponsor:** **Date:** 26 Mar 98

Originator: Pat Suggs **Phone #:** 8-1482

Title: Biodenitrification in Large Tanks

Description: See attached.

1) Suggest draining supernate from saltcake, removing 90% of Cs

2) Dissolve saltcake & pump to emptied old style tanks for this process

3) When microbial digestion complete, filter, ~~[illegible]~~

4) Filtrate may be evaporator-concentrated & re-enter step 2 OR high probability that Cs low enough to send to ETF

Technical Maturity: 500,000 gallon-scale at Oak Ridge

Safety Issues: None known currently, however evaluate for tank corrosion

Advantages: Saltstone may be critical path for many alternatives due to ~~[illegible]~~ inadequate nitrate/nitrite processing facility capacity.

Disadvantages: None identified.

Biodenitrification and Bio-Oxidation in 500,000 Gallon Tanks

ATT 1 FOR ML 11

Oak Ridge Centers for Manufacturing Technology / 1-800-356-4USA / 4USA@ornl.gov

SUMMARY

The West End Treatment Facility (WETF) at the U.S. Department of Energy's Y-12 Plant in Oak Ridge, Tennessee, treats aqueous nitric acid wastes, nitrate-bearing rinse waters, dilute biodenitrification sludges, and other aqueous waste. The process renders waste waters from the weapons handling facility, originally contaminated with nitrates and heavy metals, safe for release into a surface stream.

Description

Waste waters are delivered to the WETF in 5,000-gallon tanker trucks and 300-gallon plastic polyethylene tanks, as well as smaller containers. They go through a three-step process: (1) precipitation of heavy metals, (2) biodenitrification and bio-oxidation and (3) removal of trace metals and suspended solids. The first step involves adjusting pH; settling of the sludge to remove the uranium, nickel, zinc, chromium, and other minerals from the water; and decanting. Nutrients may also be added for the subsequent bacterial treatment. The water is then transferred to 500,000-gallon tanks to undergo anaerobic reactions by bacteria that convert the nitrates and organics to nitrogen and carbon dioxide. The average residence time is 6–12 months, and the nitrate concentration after treatment is <50 mg/liter. The nitrate level in the waste water before treatment averages approximately 15,000 mg/liter.

The waste is then transferred to the bio-oxidation tanks where bacterial oxidation ensues for an additional 2 to 6 months to destroy the residual organics in an aerobic process. The biological oxygen demand level after treatment is <50 mg/liter. The final treatment of the aqueous phase removes trace metals, solids, and organics, and the water is discharged into a surface steam at an average flow rate of 19,000 gallons per day. Denitrified sludge is transferred to storage tanks to await disposal.

The process uses three 500,000-gallon tanks for anaerobic denitrification and three other tanks of that size for bio-oxidation. Another facility uses 14,000-gallon tanks and smaller tanks for bio-oxidation but restricts the waste nitrate content to 100 ppm and does not carry out biodenitrification.

THE OAK RIDGE COMPLEX

The Oak Ridge Complex leverages the extensive research and manufacturing capabilities of three Department of Energy facilities in Oak Ridge: Oak Ridge National Laboratory, a large multipurpose research institution; the Y-12 Plant, a defense precision manufacturing facility; and the K-25 Site, a former uranium enrichment facility now housing environmental remediation and waste management programs. The unique capabilities of the Oak Ridge complex and the Oak Ridge Centers for Manufacturing Technology are available to interested private- or public-sector parties through a variety of contractual arrangements with the Department of Energy.

BUSINESS CONTACT

Manufacturing Technology Information Service
Oak Ridge Centers for Manufacturing Technology
P.O. Box 2009, Bldg. 9737
Oak Ridge, Tennessee 37831-8091
(800) 356-4USA
4USA@ornl.gov

TECHNICAL CONTACT
N. G. McRae

320: 9/3/96

ORCMT Energy- and Environment-Conscious Manufacturing Core Area

Biological Destruction of Tank Waste

2
Att For
ML 11

Idaho National Engineering Laboratory

Description

Biological Destruction of Tank Waste (BDTW) is a separation and volume-reduction process for supernatant and sluiced salt cake waste from underground storage tanks. These wastes are usually composed of various radionuclides and toxic metals concentrated in a nitrate salt solution. A BDTW system would be located adjacent to storage tanks applied to the supernatant and sluiced salt cake effluents. The bacteria act as metal and radionuclide adsorbers and also as denitrification catalysts that reproduce themselves at ambient temperature and pressure. Some degradation of organic contaminants may also occur during the process.

Supernatant and sluiced salt cake wastes flow into the BDTW bioreactor, which concentrates hazardous metals through biosorption, separating these hazardous components from the waste salt stream into a biomass product. The radioactive biomass sludge would be incinerated to reduce the volume and suitably stabilized as required for its level of radioactivity. In parallel with the metal sorption process, the microbes also catalytically reduce the nitrate waste salt stream to a bicarbonate solution. The salt solution product could be carefully monitored and, subject to regulatory approval, evaporated and treated (i.e., grouted) as a nonhazardous, nonradioactive waste.

The process uses a mixed culture of natural bacteria isolated from the Great Salt Lake and the Death Valley area. They are able to grow and reduce nitrate in the very high salt concentrations found in the tank wastes. The bacteria are grown in a bioreactor and then recycled to a biosorption tank, where they are mixed with the incoming waste. Agitation is provided by sparging with evolved N_2 and CO_2 gases. The high radioactivity and metals concentration in this tank may kill the bacteria, but dead bacteria biosorb metals equally well. The bacteria and any chemical precipitates that may have formed are removed by filtration to generate a biomass sludge containing nearly all the radionuclides, transuranics, and toxic metals.

The liquid containing the nitrate, organics, and very low levels of metals flows into the bioreactor, where it is mixed with acetic acid as a carbon source for bacterial growth. The nitrate is reduced to innocuous nitrogen gas that is released to the atmosphere after being filtered. Any remaining metal would adsorb on the growing bacteria, but the metallic concentration is now too low to inhibit bacterial metabolism. The effluent from the bioreactor, after filtration, is a concentrated solution of nonradioactive, nonhazardous salts in which nitrate has been replaced, mainly by bicarbonate.

Technical Performance

Design. The field demonstration bioreactor tank size is about 100 m^3, which corresponds to a waste treatment rate of 2 gal/min, sufficient to treat a one million gallon tank in one year. At the 2 gal/min size, the BDTW system is transportable. The current bioreactor is able to process salt solutions having a 4-6 molar nitrate concentration. The maximum salt tolerance is being explored. Power usage is estimated at 20 kW for pumping and agitation.

Laboratory Scale Testing. In 1992, halophilic bacteria capable of operating at salt concentrations of hundreds of grams per liter were isolated. The unique feature is the combination of biosorption and biodenitrification to remove several contaminants at once in highly saline solutions. This process has successfully been demonstrated on the laboratory scale.

Cost. Accurate start-up costs will not be available until developmental experiments are complete. Operational costs should be minimal because of the nature of biological processing.

Projected Performance

The volume and status of the biomass sludge product depends on the metals content in the waste and the effectiveness of biosorption (which is currently under study). In most cases, the biomass product would be a low-level radioactive waste that is 1-10% of the feed volume. In some cases the biomass product would be a high-level waste requiring vitrification. The salt solution waste will have approximately the same volume and concentration but the nitrate salts would be replaced by carbonate.

Waste Applicability

This biological process is applicable to treat the highly saline underground storage tanks of the Hanford Site, which contain various radionuclides, transuranic and toxic metals, and organic materials. The organic materials are principally salt cake, consisting mainly of nitrate salts and lower levels of metals, and concentrated supernatant whose composition is in equilibrium with the waste sludge and salt cake. It would be applicable to treat similar waste of other tank farms. The process should work on most tank waste, but a bench-scale treatability study would be needed for each tank.

Status

The process has been demonstrated in the laboratory. The technology is currently in scale-up design for a field demonstration.

Regulatory Considerations

No ecological impacts are anticipated. Operation at ambient temperature and pressure enhances worker safety. Full secondary containment is provided to contain leaks. Nitrogen gas release is through high efficiency particulate air filters (HEPA) to prevent any radiation release. Concentrated acetic and phosphoric acids which are brought to the site by tanker trucks are subject to Department of Transportation regulations. The process uses only natural bacteria; no mutant or recombinant strains are used. Consequently, there are no biohazard issues.

Potential Commercial Applications

This process is versatile and can also treat waste streams from metals reprocessing facilities in addition to those waste streams from nuclear fuels processing and reprocessing facilities. Biosorption is a process that has been commercialized recently for removal of metals from dilute aqueous solutions. It is being used to recover uranium at the Dennisor Mine in Canada at a scale of 90,000 lb/day.

Baseline Technology

The standard technology consists of ion exchange to remove the radionuclides, followed by calcination and a chromium separation step. The demonstration of this biological process will increase the number of options available for treating supernatants and salt cakes. It is likely that biological treatment is a cost-effective alternative for volume reduction and denitrification of tank wastes.

Intellectual Property Rights

A patent has been applied for under the names of G.F. Andrews and A.J. Tien that would be owned by DOE, Idaho National Engineering Laboratory.

For more information, please contact:

DOE/OTD Environmental Technology Information Service
(800) 845-2096

DOE Program Manager
Sherry Gibson
EM-552, Trevion II
U.S. Department of Energy
Washington, DC 20585
(301) 903-7258

Principal Investigator
G.F. Andrews
Idaho National Engineering Laboratory
EG&G Idaho, Inc.
P.O. Box 1625
Idaho Falls, ID 83415-2203
(208) 526-0170

Industrial/University Partnership
None at present.

References

1. DOE-ID, ``Technology Information Profile (Rev. 2) for ProTech, Technology Name: Biological Destruction of Tank Wastes," DOE ProTech Database, TTP Reference Number: ID-121204, July 15, 1993.

Go to the Table of Contents

Go to the Remediation Technology Profiles Index

Alternative #: ML 12 Sponsor: Sam Fink

Title: Direct Processing of Interstitial Liquid from Crystallized Salt Solutions

Description: Drain or hydraulically displace the liquid from the interstitial regions of the crystallized salt solutions. Directly feed this reduced volume of waste to the DWPF melter. Dissolved salt solution would proceed through Saltstone after separation of entrained sludge fines (likely by cross-flow filtration using a filter media such as the Graver Separations sub-micron unit).

Reference: Conceptual process. Based on numerical simulation by K. Staheli and J. Peters commissioned by James Brooke (SRT-CHT-98-0017).

Technical Maturity: Conceptual.

Advantages If cesium content of the residual saltcake proves sufficiently low -- and this seems unlikely -- the concept eliminates ITP, Late Washing, and Precipitate Hydrolysis.

Disadvantages: As defined, may lead to large cesium content in Saltstone with potential permit changes required. Could require changes in Waste Acceptance criteria for sludge due to higher sodium content of direct feed. Likely to result in increase number of glass canisters over life cycle of mission.

Safety Issues

Key Initial Tests: (1) Laboratory studies to estimate fraction of cesium trapped in crystall macrostructure and not readily displaced in first 2-3 'flushes' of the interstitial spaces. (2) Revised material balances for HLWS to ascertain impact on number of glass canisters and sludge washing limits.

Process Diagram (Optional, see reverse side) Not provided.

HLW SALT DISPOSITION PROCESS ALTERNATIVES

Alternative #: ML 13 **Sponsor:** T. Marted **Date:** 3/27/98

Title: Grout the salt solution in a purpose built facility without worrying about separation of Cs137 etc

Description:
Direct grouting of salt solution waste.

Technical Maturity: Medium. These kinds of waste ie: non heat generating are grouted in a variety of facilities worldwide.

Safety Issues: Low.

Advantages: Not high temperature process.
Tolerant to compositional variation

Disadvantages: Would need to move to a performance based matrix acceptance rather than definition by current means which forces vitrification of "HLW".

Volumes may be larger than if separation was performed.

Would produce higher activity product with limited options for storage.

Accept

HLWALTFM:PIH/Rev 1
3/11/98

HLW SALT DISPOSITION PROCESS ALTERNATIVES

Alternative #: MLH1 Sponsor: TEAM Date: 4-7-98

Originator: J.L. Barnes Phone #: 7-4466

Title: Sodium Titanate for Pu & Sr, salt and liquor separation, some form of salt disposition, and liquor to DWPF

Description: Various sequences/combinations should be considered using Interstitial Fluid Displacement, dewatering, dehydration to remove liquor & Cs to DWPF; salt disposition by microbial digestion, dry handling, saltstone & microbial filtrate to ETF & filter media to CIF.

Technical Maturity: Various depending on stage being considered and application

Safety Issues: Unknown Cs loading on Saltstone depending on process combinations, microbial organisms unknown disposition & impact on equipment.

Advantages: Could be simplified operations depending on process combinations

Disadvantages: Several unknowns including unknown unknowns with IFD, microbial organisms

(ML1, ML8, ML9, ML11, ML12)

Process Diagram (Optional)

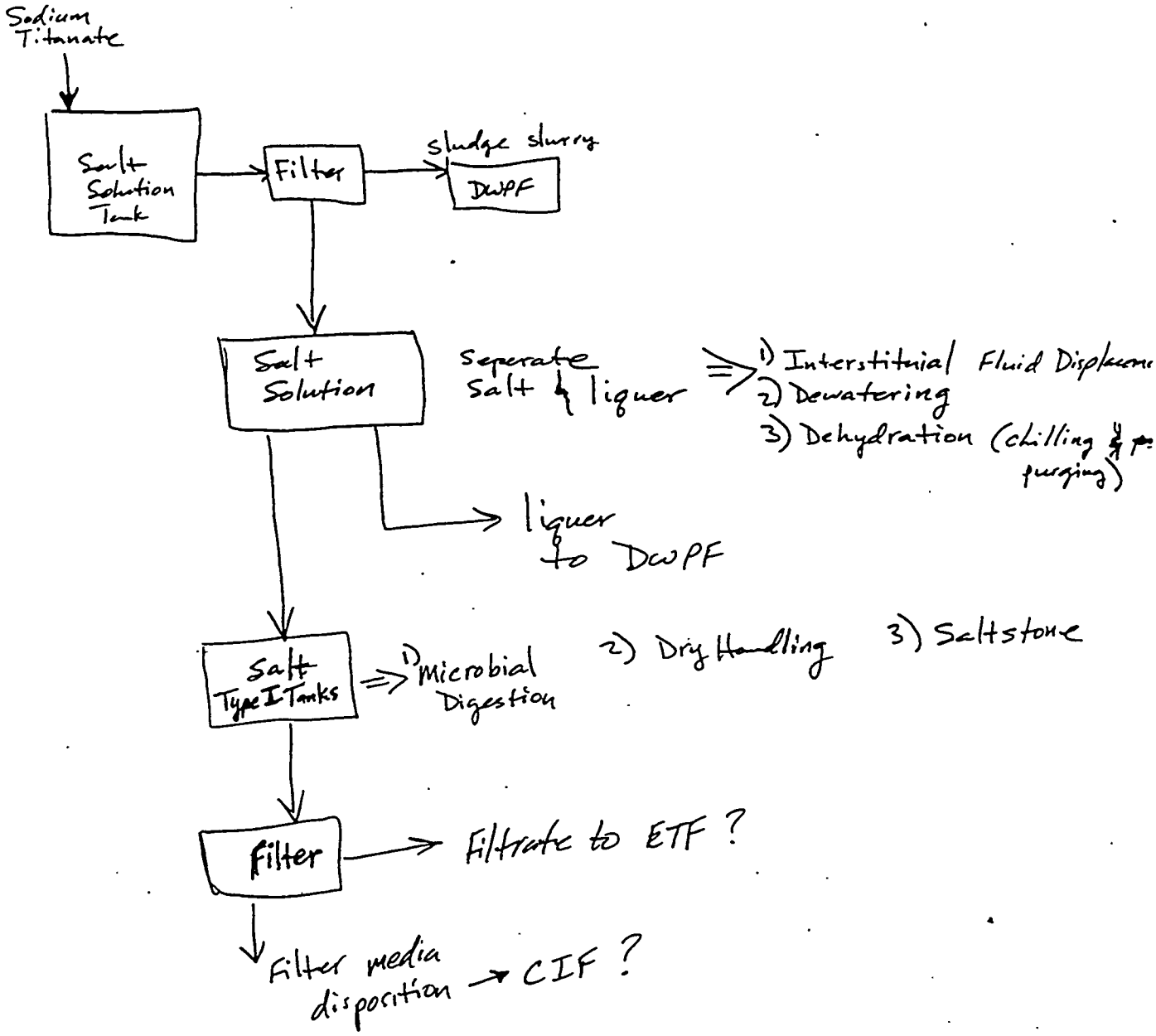

HLW SALT DISPOSITION PROCESS ALTERNATIVES

Alternative #: PI 1 **Sponsor:** Pat Suggs **Date:** 26 Mar 98

Originator: Pat Suggs **Phone #:** 8-1482

Title: Inorganic Precipitating Agent for Cs

Description: DOE-SR is currently investigating an inorganic compound for precipitating Cs. If successful, it should only remove ~80-97% of Cs, therefore is not a drop-in replacement for tetraphenylborate

Technical Maturity: Embarking on lab-scale "proof-of-concept" now. Should require minimal development. If unsuccessful, this pro forma will be quietly withdrawn.

Safety Issues: None

Advantages: No tank corrosion potential.

Disadvantages: Not an all-in-one process. Either Saltstone Cs limits must be increased, or must be recombined with another process such as 1) ion exchange as a "polishing" step or 2) concentration by evaporation, repeat.

HLW SALT DISPOSITION PROCESS ALTERNATIVES

Alternative #: PI 2 **Sponsor:** Dan McCabe 5-2054 **Date:** 26 Mar 98

Originator: Pat Suggs **Phone #:** 8-1482

Title: Cobalt Dicarborane (a quasi-inorganic precipitate)

Description: See attached printouts. McCabe is best source for more info.

= Note: I don't have high hopes for this process but needs to be included in database with rational for making/not making short list.

Technical Maturity: Lab only.

Safety Issues: 22 H atoms per molecule. Potential hydrogen producer in radiolytic environment

Advantages:

Disadvantages: Decomposes, temperature control needed.

Alternative #: PI 3 **Sponsor:** Reid Peterson

Title: Strontium precipitation through isotopic dilution

Description: Addition of stable strontium to high level waste results in decontamination factor of ~ 100. Used to remove strontium-90 from solution. The precipitate would then be filtered.

Reference: ORNL/TM-12786
Technical Maturity: Lab scale demonstration completed by ORNL
Advantages: For flowsheets requiring only strontium removal, likely more cost effective than sodium titanate.
Disadvantages: Does not remove actinides.
Safety Issues - Criticality associated with actinides?
Key Initial Tests: Additional precipitation kinetics tests

HLW SALT DISPOSITION PROCESS ALTERNATIVES

Alternative #: PI 4 Sponsor: _____ Date: 3/25/98

Originator: Major Thompson Phone: 5-2507

Title: Precipitation of Cs Aluminosilicate from Dissolved Salt Solution

Description: Recent work on the spent fuel melt/dilute flowsheet has shown that Cs reacts with Al oxide and possibly Si oxide to form nonvolatile Cs compounds. In addition, about 40 % of the Cs is not soluble in Hanford waste tanks that contain proven amounts of aluminosilicates as part of the sludge. These observations imply that Cs aluminosilicates can be formed in wastes solutions and the Cs cannot be brought back into solution with by alkaline and neutral solutions. Thus, addition of silicate and aluminate in the proper ratios to tank salt solutions held at a controlled temperature should result in the formation of aluminosilicates containing Cs. Once the aluminosilicate formed, Cs would not be soluble. The Cs containing solids could be concentrated by cross flow filtration and the slurry sent to DWPF for vitrification. The decontaminated filtrate would be sent to Saltstone for disposal. Process would require construction of a tank with temperature control for reaction to form the aluminosilicate material.

Technical Maturity: Theoretical concept which has not been tested in the laboratory. However, reaction conditions should be obtainable from the literature on synthesis of zeolites and from manufacturers of synthetic zeolites or university researchers into zeolite materials. The decontamination factor is not known, but could be high since some K and Na would precipitate as well resulting in better removal of Cs.

Safety Issues: There are no recognized safety issues for this process because the exact conditions and chemicals are not well characterized. However, fewer safety issues are expected because all the chemicals are inorganic which removes flammability hazards related to handling organic material in high radiation environments.

Advantages: All the added chemicals and the precipitate are inorganic materials which are very resistant to radiation damage. There is no possibility of flammable organic compounds being generated during processing or storage. The chemicals are compatible with existing equipment and vitrification process.

Disadvantages: Unproven process so long development time and high risk of failure. Process is not highly selective for Cs over K and Na so that excessive amounts of these materials could be sent to DWPF for vitrification and result in increased glass volume and higher life cycle cost. Stringent control of temperature and addition of chemicals to minimize the formation of undesired phases.

JEFF

HLW SALT DISPOSITION PROCESS ALTERNATIVES

#54 at 3/24/98 Meeting

Alternative #: EX1 **Sponsor:** R.F. Bradley **Date:** 3/25/98

Originator: R.F. Bradley **Phone #:** 2-9879

Title: 1976 Flowsheet (Elutable Ion Exchange)

Description: Absorb Cs on phenol - sulfonic resin. Wash Column with Water. Elute with ammonium carbonate/ammonium hydroxide. Heat the solution to decompose ammonia salts. load Cs enriched concentrate on zeolite. Incorporate zeolite into glass in DWPF

Technical Maturity: This is a modification of a demonstrated Hanford Flowsheet.

Safety Issues: Standard nuclear chemical hazards.

Advantages: Based on demonstrated Hanford flowsheet.

Disadvantages: Expensive. Probably requires a processing canyon.

agent. The addition of a drying step to precede sludge washing is based on preliminary laboratory tests indicating that subsequent washing and centrifuging are much more effective if the sludge has first been dried.

Cesium Separation. Cesium will be removed from the waste supernate by sorption on a phenol–sulfonic ion exchange resin such as Duolite (Diamond Shamrock Chemical Co.) ARC 359, as shown in Figure 3. This flowsheet is a modification of one currently being used by ARHCO at Hanford (3). Cesium will be absorbed on the two columns in tandem until breakthrough from the first column exceeds a predetermined level, after which the column will be washed with water (not shown in the diagram) and eluted with a mixture of ammonium carbonate and ammonium hydroxide. Breakthrough will be detected by a gamma ray monitor on the line between the two columns.

Experiments with simulated waste indicate that we can process approximately 20 column volumes through one Duolite column and obtain decontamination factors of about 10^4–10^5. We expect this to be sufficient, but, if necessary, we can obtain higher decontamination factors by processing less feed before regeneration or by using a second cycle.

The eluate from this system contains ammonium carbonate, ammonium hydroxide, cesium carbonate, and sodium carbonate. The ammonium salts will be decomposed by heating the solution and collecting the

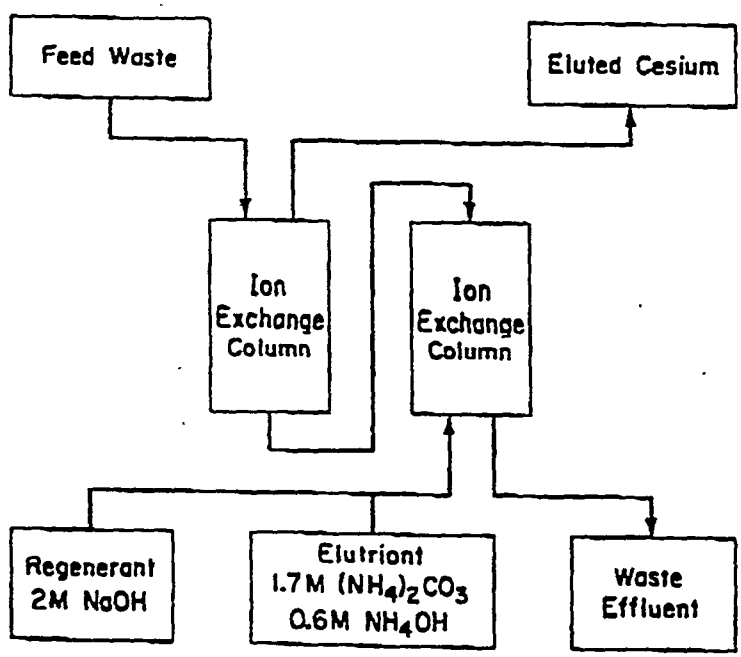

Figure 3. Ion exchange removal of cesium from waste

HLW SALT DISPOSITION PROCESS ALTERNATIVES

Alternative #: EX2 **Sponsor:** J Fu **Date:** 3/25/94

Originator: J FORTALDO **Phone #:** 8-6086

Title: REGENERABLE ION EXCHANGE

Description: UTILIZE SUITABLE REGENERABLE ION EXCHANGE RESINS TO REMOVE CS, SR & PU FROM SALT SOLUTIONS

Technical Maturity: APPLICATION DEMONSTRATED IN FULL NUCLEAR OPERATION WITH SIMILAR BUT NOT IDENTICAL STREAMS; SOME PILOT DEMO (SIMULATED AND RADIOACTIVE) REQUIRED

Safety Issues: ELIMINATES $CuHe$; OTHER HAZARDS (HNO_3, ORGANIC RESINS) SHOULD BE MANAGABLE

Advantages: "CLEAN" FEED TO DWPF; MINIMAL ORGANICS INTRODUCED INTO THE SYSTEM; MINIMAL RADIOACTIVE WASTE IE SPENT RESIN; HIGH OVERALL PROBABILITY OF SUCCESS

Disadvantages: HIGH DEMO AND CONSTRUCTION COSTS; TIME DELAY

HLW SALT DISPOSITION PROCESS ALTERNATIVES

Alternative #: EX3 **Sponsor:** J.S. EVANS, 703-F **Date:** 3/26/98

Originator: W. H. MARTIN, 704-T **Phone #:** 803-557-7280

Title: HLW SALT DISPOSITION VIA NMS&S CANYONS USING ION EXCHANGE PROCESS

Description: INSTALL A SEPARATORY ION EXCHANGE PROCESS IN EITHER OR BOTH F AND H AREA CANYONS TO DECONTAMINATE THE HLW SALT SOLUTIONS TO ALLOW APPROPRIATE DISPOSITIONING OF THE HIGH LEVEL WASTE RADIOACTIVE COMPONENTS THROUGH THE DWPF IN S AREA AND THE DECONTAMINATED SALT THROUGH SALTSTONE FACILITY IN Z AREA. THE ION EXCHANGE RESIN COULD POTENTIALLY BE REGENERATED FOR REUSE OR BE DIGESTED OR SLURRIED FOR TRANSFER TO S AREA. THE DECONTAMINATED SALT SOLUTION COULD BE TRANSFERRED TO Z AREA

Technical Maturity: SRTC HAS DEMONSTRATED AN ACCEPTABLE ION EXCHANGE RESIN ON A LAB SCALE SO SOME R&D WOULD BE NEEDED. THE CANYONS HAVE PERFORMED FULL SCALE NUCLEAR HANDLING OF ION EXCHANGE RESINS WITH BOTH DIGESTION AND REGENERATION. THE TRANSFER PROCESSING TECHNOLOGY IS VERY MATURE EXCEPT FOR POSSIBLY LONG DISTANCE RESIN SLURRY TRANSPORT.

Safety Issues: MINIMAL, EXCEPT FOR THOSE PRESENTLY FACED SUCH AS SEISMIC AND AGE OF FACILITIES. THIS PROCESSING WOULD BRING WASTE BACK INTO THE CANYON BUT IT WOULD BE A LESSER HAZARD THAN THE FRESHER HIGH LEVEL WASTE THAT IS PRESENTLY BEING HANDLED.

Advantages: USES EXISTING REMOTE OPERATION/SHIELDED FACILITIES. TRAINED WORKFORCE FAMILIAR WITH FACILITIES ALREADY EXISTS. PROCESSING OF A SIMILAR NATURE HAS BEEN PREVIOUSLY PERFORMED IN THESE FACILITIES. IF FUTURE MISSIONS DO NOT MATERIALIZE MORE OF THE CANYON BUILDING COULD BE USED — PUTS CANYON TO NON-PLUTONIUM PROCESSING USE.

Disadvantages: CANYONS HAVE A LIMITED LIFE EXPECTANCY. CANYONS MAY BE NEEDED FOR OTHER PROCESSING. THIS CONCEPT CROSSES TWO ORGANIZATIONS AND APPEARS TO BE SENDING WASTE BACKWARDS — THUS IMPLEMENTATION WOULD REQUIRE TEAMWORK, COOPERATION AND COMMUNICATIONS TO ALLEVIATE CONCERNS.

Process Diagram (Optional)

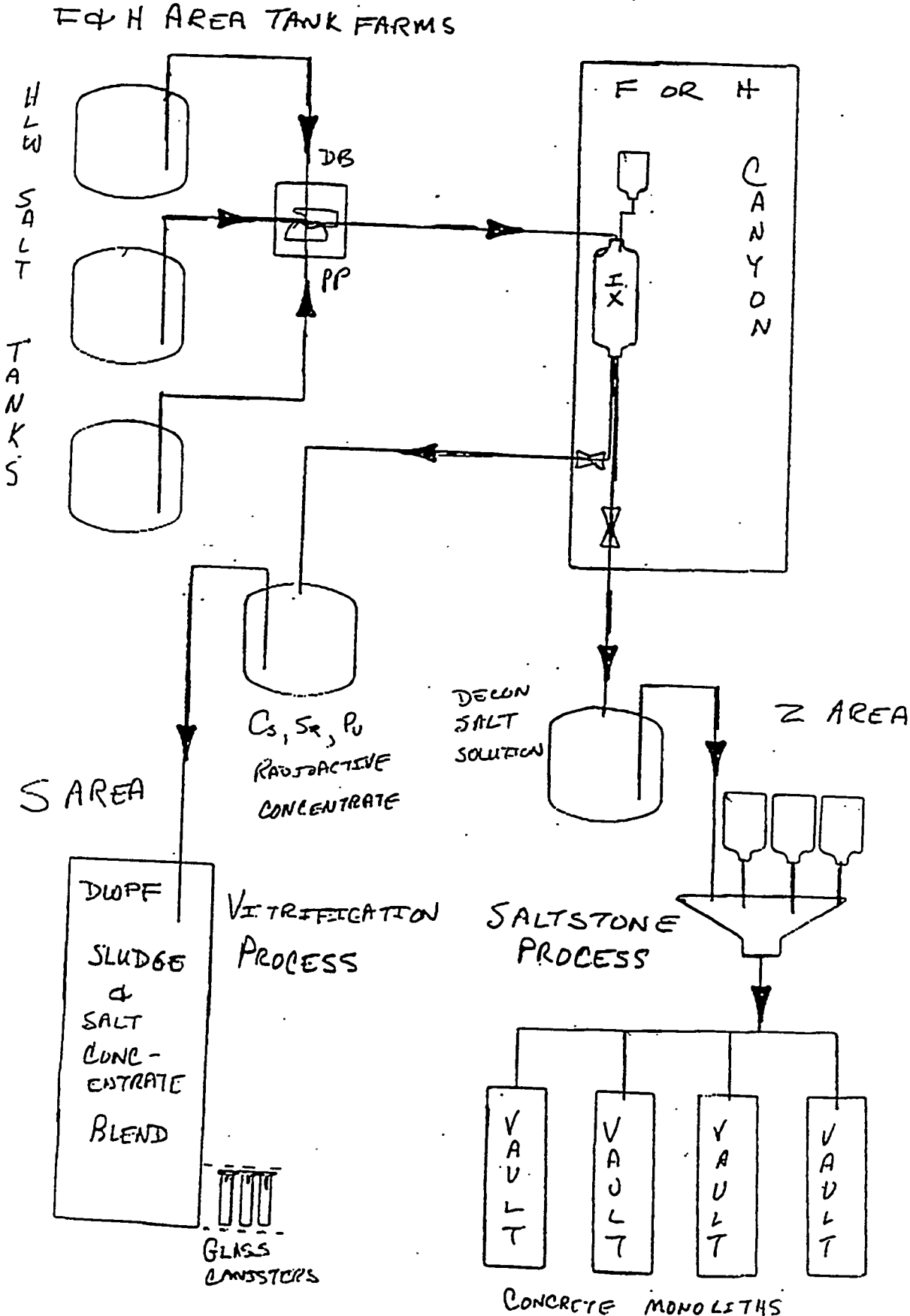

HLW SALT DISPOSITION PROCESS ALTERNATIVES

Alternative #: EX4 **Sponsor:** Tusler **Date:** 8/25/97

Title: Continuous Ion Exchange via a Simulated Moving Bed.

Description: A continuous ion exchange process equivalent to a moving bed. Instead of trying to pump solids, the process changes the feed point and the elution point of a fixed bed. A good reference is the book by Ralph Yang of the University of Michigan.

Technical Maturity: Excellent. The process is licensed by UOP and is widely used.

Safety Issues: Will be similar to other ion exchange processes

Advantages: An established process.

Disadvantages: Requires effective ion exchange chemistry. May be hard to make remote.

Process Diagram (Optional)

HLW SALT DISPOSITION PROCESS ALTERNATIVES

Alternative #: Ex 5 **Sponsor:** Crosby **Date:** 3/25/98

Title: Ion Exchange in a Membrane.

Description: Normal ion exchange, but in a packed bed on a 1-cm deep layer with particles smaller, spread in the matrix. The result is an exchange without mass transfer limits, giving a productivity increase of better than 10 X.

Technical Maturity: Fair. SM has done a good job, but the scope of their efforts is too broad. Gave leads to the beginning parallel efforts

Safety Issues: Similar to other ion exchange processes.

Advantages: Activities developed by SM; may include experiments at Hanford.

Disadvantages: Requires an ion exchange chemistry. Don't know how hard remote operation will be.

12

HLW SALT DISPOSITION PROCESS ALTERNATIVES

Alternative #: EX 6 **Sponsor:** W.L. THOMPSON

Title: Sodium Titanate with Elutable I/X Resin

Description: Use S.T. in feed tank to adsorb Pu, U, & St. Filter with ITP Filter. Filter goes to elutable I/X columns. Decontaminated stream goes to saltstone. Eluate goes to DWPF melter. Pu, U, & St can also be removed prior to I/X by precipitation.

Reference: BNFL proposed flow sheet.
HLW -OVP 930051

Technical Maturity: Currently being developed for Hanford. Studied many times.

Advantages: Eliminates late wash and salt call. No benzene. No slurry handling. No benzene stopper operation. Reduced Nz use. Reduced Cu use in DWPF.

Disadvantages: Possibly higher investment than changes for TBP but significantly less life cycle costs.

Safety Issues Gas generation in IX columns; heat generation in columns.

Key Initial Tests: I/X resin loading & life cycle tests. Filtration tests.

Process Diagram (Optional, see reverse side):

PROPOSED
I/X PROCESS DIAGRAM

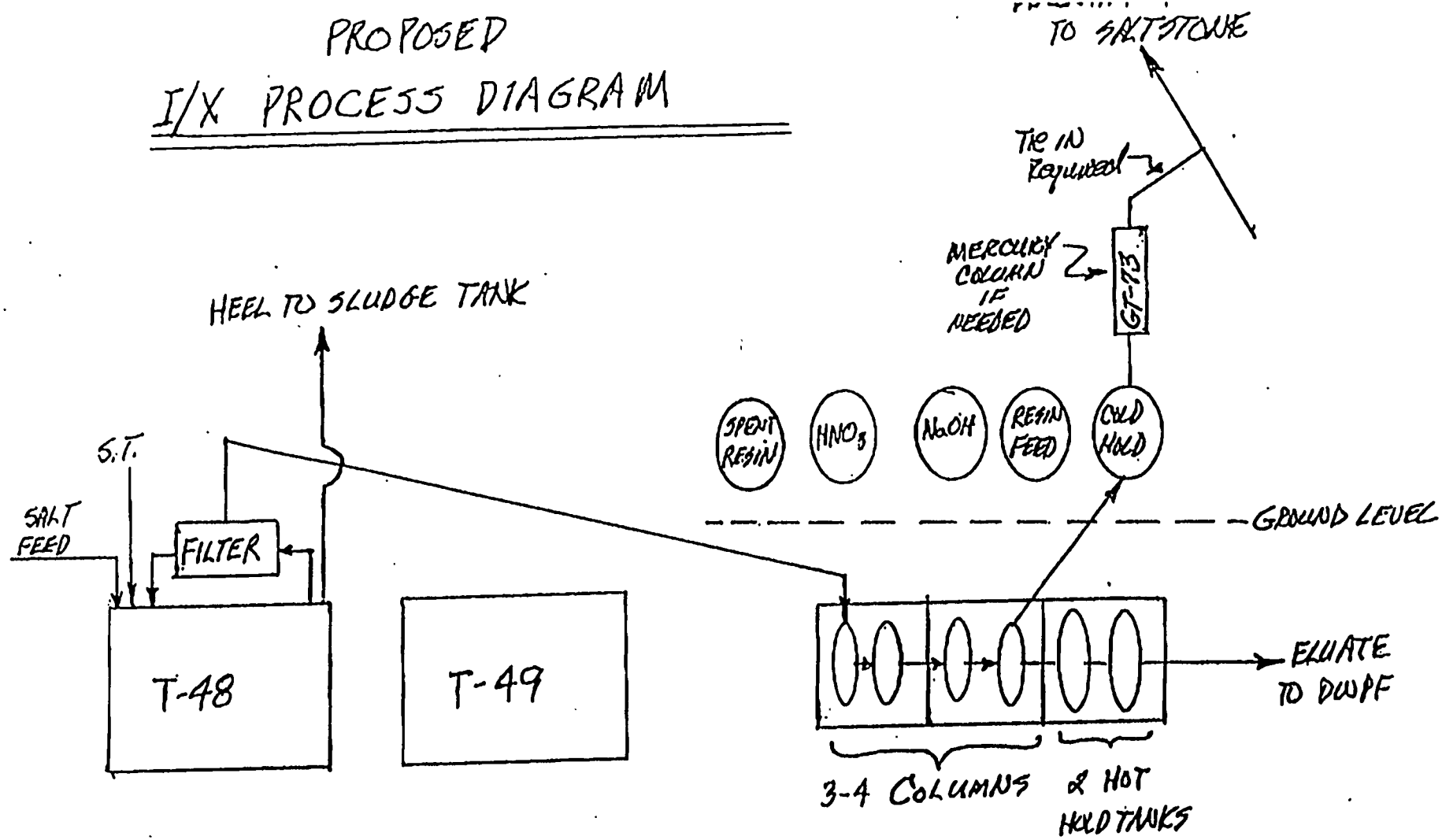

W.L. TAMOSAITIS
SRTC
2/2/98

HLW SALT DISPOSITION PROCESS ALTERNATIVES

Alternative #: EX7 Sponsor: D.T. Hobbs (Transuranics)

Title: Electrically Switched Ion-Exchange

Description: This salt dispositions process features two stages; (1) a Sr ,TRU and solids removal stage and (2) a Cs removal stage using an electrically switched ion-exchanger. The Sr and TRU removal would be accomplished with monosodium titanate (MST) followed by crossflow filtration to separate solids and liquid. The filtered salt solution is fed to the electrically switched ion-exchange (ESIX) stage. The ESIX material films of ferricyanides on electrodes. The ferricyanide in polarized reducing ferricyanide to ferrocyanide which effectively loads cesium from a high sodium solution. After cesium loading complete, the polarization of the film is reversed which oxidizes the ferrocyanide back to ferricyanide releasing the cesium into solution. The ESIX material is then briefly rinsed to recover the cesium which is then sent to the DWPF for vitrification.

Reference: M. A. Lilga, R. J. Orth, J. P. H. Sukamto, S. D. Rassat, J. D. Genders and R. Gopal, "Electrically Switched Cesium Ion Exchange. FY97 Final Report., " PNL-11766, Pacific Northwest National Laboratory, Richland, WA.

Technical Maturity: Technology for Sr and TRU removal with MST and solid/liquid separation by crossflow filtration has been implemented. ESIX is at the R&D stage although Cs removal with ferrocyanides has been implemented.

Advantages: Significant reduction (ca.100X) in volumes of solution associated with eluting, washing and regenerating the ESIX material compared to standard IX materials.

Disadvantages: More complex design of IX column equipment.

Safety Issues__

Safety Issues: Formation of hydrogen during electrochemical reduction and oxidation of IX films.

Key Initial Tests: Determine if the ESIW material will effectively operate at high hydroxide concentrations. Run pilot-scale studies to determine sorption/desorption kinetics and breakthrough curves.

Process Diagram :

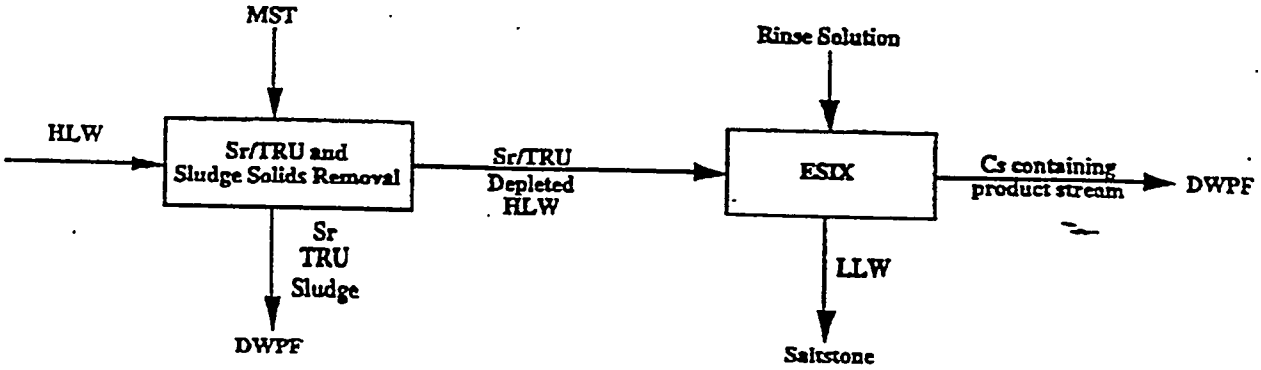

HLW SALT DISPOSITION PROCESS ALTERNATIVES

Alternative #: EX 8 Sponsor: Lee Dworjanyn

Title: **Potassium Removal followed by TPB Precipitation**

Description: Reduce potassium in feed salt solution before TPB precipitation:

1. Use SuperLigand® ion exchange to reduce potassium in salt solution by 90%. Locate IX columns in Tank-48H.
2. Feed eluted K, and some Cs to DWPF.
3. Use In-Tank NaTPB to precipitate Cs and remaining K.
4. Concentrate slurry, wash and transfer to DWPF.

Reference: IBC publication claiming K removal DF from caustic solutions.

Technical Maturity: SuperLigand® ion specific resins have been demonstrated for a number of metals.

Advantages:

- Significantly reduced benzene source term.
- Significant NaTPB cost savings.
- Improved KTPB filtration rate and filter life.

Disadvantages:

- Hotter Cs stream to DWPF.
- New equipment.

Safety Issues: Benzene in vapor, but at reduced concentration.

Key Technical Tests: Synthesize K specific SuperLigand®, confirm test-tube effectiveness and demonstrate performance in bench scale tests. (Estimated cost $120K).

Process Diagram:
(Optional)

FY'98 Technology Partnership R&D Proposal

Title: POTASSIUM REMOVAL FROM HIGH LEVEL WASTE

PI: L. O. Dworjanyn, Tel. (803) 725-3515
Dept.: SRTC/WPT
Customer: Jerry Morin, ITP

Current Funding Request ($K)	Future Forecast ($K)	
FY'98	FY'99	FY'00
120	120	60

Abstract

The bulk of In-Tank Precipitation (ITP) effort in high level waste (HLW) cesium decontamination (cost, production cycle time, safety, environmantal releases) is associated with unwanted precipitation of potassium. This proposal will demonstrate the feasibility of potassium removal before cesium precipitation. The plan is to use ion selective resin to remove or reduce potassium from the feed to ITP.

Stake

- Significantly reduced source term for benzene generation and release and improved process safety.
- Significant cost savings by up to 90% potential reduction in sodium tetraphenylborate (NaTPB) usage in the ITP process.
- Improved ITP filtration performance (higher filtration rate) and reduced cycle time allowing additional process cost savings.
- Extended filter life and reduced risk of filter tube pluggage by operating at lower slurry concentration.
- Reduced benzene emissions to the environment.

Objectives

1. Demonstrate bench scale feasibility of potassium removal from HLW using K-selective ion exchange material.
2. Develop proposal for in-line/in-tank potassium removal ion exchange unit.

Background

NaTPB is an excellent and proven precipitant for cesium, allowing 40,000X radioactive decontamination of high level waste. This in turn minimizes radiation exposure during saltstone preparation and results in a Class-A saltstone for environmentally acceptable on site storage. However, most of the SRS HLW contains 100 lb. of potassium for each pound of cesium. The potassium is also precipitated in the ITP process since the

potassium tetraphenylborate (KTPB) is also insoluble in the ITP salt solution. Hence most of the NaTPB usage, precipitation, filtration, and benzene emissions are determined by the potassium concentration.
IBC Advanced Technologies, American Fork, UT, have developed structurally engineered SuperLig® materials which can be synthesized to complex specific metal ions such as mercury, lead, arsenic, potassium or cesium. IBC have developed a SuperLig® structure capable of selective cesium removal at ppm levels in the presence of high molecular concentrations of Na^+ and K^+ at high pH. The performance of this material (SuperLig®664) been confirmed in pilot tests at PNNL and the material was also shown to be radiation resistant at up to 1E+08 rad.
IBC have prepared test-tube quantities of a potassium sensitive SuperLig® and their tests indicate 10^5 selectivity in K removal from cesium. For ITP needs full rejection of Cs is not necessary since the regenerated potassium and traces of cesium could be passed on to DWPF.

Approach

- With IBC confirm equilibrium K-Cs-Na partitioning in simulated HLW salt solution. ($20K)
- Demonstrate K removal from simulated HLW using IX bench scale testing at IBC. ($60K)
- Develop concept for in-tank demonstration using HLW. ($40)

Resources Required

- $80K Contract with IBC.
- $40K Part time PI support.

Signature: _____
L3 Line Manager

Signature: _____
Technology Business Team Leader

D:\app\labr&d\K_REMOV.DOC

HLW SALT DISPOSITION PROCESS ALTERNATIVES

Alternative #: EX8.1 Sponsor: TEAM Date: 4-7-98

Originator: J.L. Barnes Phone #: 7-4466

Title: Potassium ~~Removal~~ to Saltstone followed by TPB precipitation

Description: 1) Use SuperLigand ion exchange to reduce potassium in salt solution by 90%. Locate IX columns in Tank-48H
2) Feed eluded potassium to Saltstone
3) Use In-Tank NaTPB to precipitate Cs
4) Concentrate slurry, wash and transfer to DWPF

Technical Maturity: Superligand ion specific resins have been demonstrated

Safety Issues: Benzene in vapor, but @ reduced concentration

Advantages: Significantly reduced benzene source term
Significant NaTPB cost savings

Disadvantages: Higher Cs loaded stream to DWPF
New equipment.

(EX 8)

Process Diagram (Optional)

NONE

Alternative #: Ex 9 Sponsor: D.J. McCabe (TAMUSA DOE)

Title: Cs eluate immobilization using CST

Description: (a) Add MST for Sr, TRU removal and prefilter; (b) Cs IX using an elutable resin; (c) neutralize the eluate and load the Cs onto CST; (d) Store Cs-loaded CST in a vault as a solid.

Reference: Proposed back-up flowsheet for Hanford TWRS Privatization

Technical Maturity: Storage on CST is a peculiarity of the Request for Proposals for Hanford TWRS Privatization, requiring temporary storage of the cesium product as a dry, free-flowing solid.

Advantages: Decouples DWPF from supernate treatment; Eliminate CST glass solubility problems; Glass reformulation not required.

Disadvantages: High dose rate for loaded material; Moderate cost of material; Transport of CST slurry difficult due to high density of solids; Absence of high dose rate for vitrified product desired for non-proliferation; Complex operation; Additional process step; Storage issues.

Safety Issues: High dose rate; Hydrogen generation rate.

Key Initial Tests: IX column tests for both elutable resin and CST; Hydrogen G-value for loaded material.

Process Diagram (See reverse side):

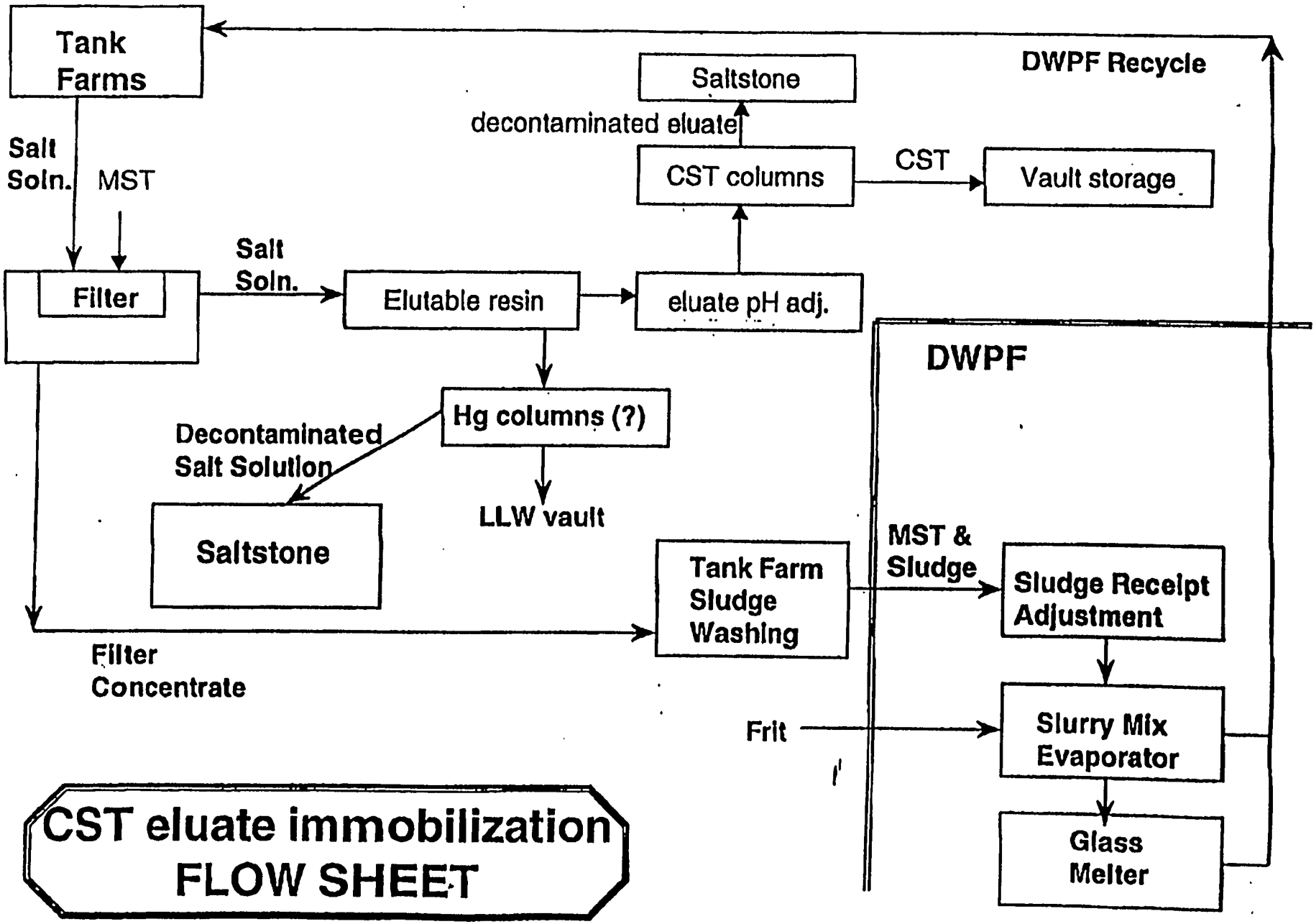

CST eluate immobilization FLOW SHEET

Alternative #: EX10 Sponsor: David Hobbs

Title: Electrically Switched Ion-Exchange

Description: This salt dispositions process features two stages; (1) a Sr ,TRU and solids removal stage and (2) a Cs removal stage using an electrically switched ion-exchanger. The Sr and TRU removal would be accomplished with monosodium titanate (MST) followed by crossflow filtration to separate solids and liquid. The filtered salt solution is fed to the electrically switched ion-exchange (ESIX) stage. The ESIX material films of ferricyanides on electrodes. The ferricyanide in polarized reducing ferricyanide to ferrocyanide which effectively loads cesium from a high sodium solution. After cesium loading complete, the polarization of the film is reversed which oxidizes the ferrocyanide back to ferricyanide releasing the cesium into solution. The ESIX material is then briefly rinsed to recover the cesium which is then sent to the DWPF for vitrification.

Reference: M. A. Lilga, R. J. Orth, J. P. H. Sukamto, S. D. Rassat, J. D. Genders and R. Gopal, ÒElectrically Switched Cesium Ion Exchange. FY97 Final Report., Ò PNL-11766, Pacific Northwest National Laboratory, Richland, WA.

Technical Maturity: Technology for Sr and TRU removal with MST and solid/liquid separation by crossflow filtration has been implemented. ESIX is at the R&D stage although Cs removal with ferrocyanides has been implemented.

Advantages: Significant reduction (ca.100X) in volumes of solution associated with eluting, washing and regenerating the ESIX material compared to standard IX materials.

Disadvantages: More complex design of IX column equipment.

Safety Issues: Formation of hydrogen during electrochemical reduction and oxidation of IX films.

Key Initial Tests: Determine if the ESIW material will effectively operate at high hydroxide concentrations. Run pilot-scale studies to determine sorption/desorption kinetics and breakthrough curves.

HLW SALT DISPOSITION PROCESS ALTERNATIVES

Alternative#: EX 11 Sponsor: J. P. Morin Date: 3/1798

Originator: J. P. Morin Phone #: 83214

Title :Electrochemical Ion Exchange

Description:
This process uses an elutable ion exchange (IX) media such as resorcinol-formaldehyde designed for cesium removal from high caustic salt solutions. Loading of the ion exchange media occurs in the same way as a conventional IX process. However, elution is electrochemically driven. Instead of using an acid to provide the elution proton, this proton is electrochemically generated using water as the eluate. The kinetics of elution are faster and can occur at higher concentrations of Cs in the eluate.

Technical Maturity:
Electrochemical ion exchange is still in the developmental stage. AEA has developed an electrochem IX cell and some developmental testing has been done in the UK as well as at Oak Ridge.

Safety Issues:
Chemically, this process has the same attendant safety issues as conventional ion exchange. There may be an additional safety issue associated with electochemically-formed hydrogen under abnormal operation.

Advantages:
The primary (potential) advantages of electrochemcal ion exchange are as follows:
1) Reduction in the loading-elution cycle time.
2) Water can be used as the eluate.

Disadvantages:
Electrochemical electodes have to be incorporated into the design of the IX column or cell which complicates the design.

HLW SALT DISPOSITION PROCESS ALTERNATIVES

Alternative #: EX 12 Sponsor: BNFL Date: 3/27/98

Originator: Stewart Mackay Phone #: (509) 946-4006

Title: Actinide & Cs Separations Using Regenerable SuperLig and IX Materials

Description: The ultrafilter system presently in the filter building is replaced with a smaller ultrafilter unit, Cs IX column, actinide IX column, HNO3 evaporator, and associated vessels. The SRS waste is filtered to remove entrained solids and passed through either a mixed column or column in series which contain SuperLig 644 and Actinide (Am/Cm/Pu) resins. The column(s) are eluted with 0.5 M HNO3 to remove the radionuclides. A small evaporator is used to recover nitric acid and reduce the eluate volume. The concentrated eluate is neutralized for transfer to DWFP.

Technical Maturity: SuperLig 644 has been tested at lab scale with radioactive Hanford waste samples by SRTC personnel. The SuperLig resin for actinide separations has not been tested with radioactive waste solutions.

Safety Issues: SuperLig 644 is eluted with 0.5 M nitric acid. Strong acid will cause rapid decomposition of the SuperLig 644 resin.

Advantages: BNFL's proposed approach for treating Hanford tank waste uses SuperLig 644 resin. BNFL is currently collaborating with SRTC in demonstrating Cs separation with SuperLig 644 and plans pilot scale tests with SRS waste. SRS can benefit from the BNFL testing.

Disadvantages: Spent resin must be disposed of as solid waste or processed in CIF.

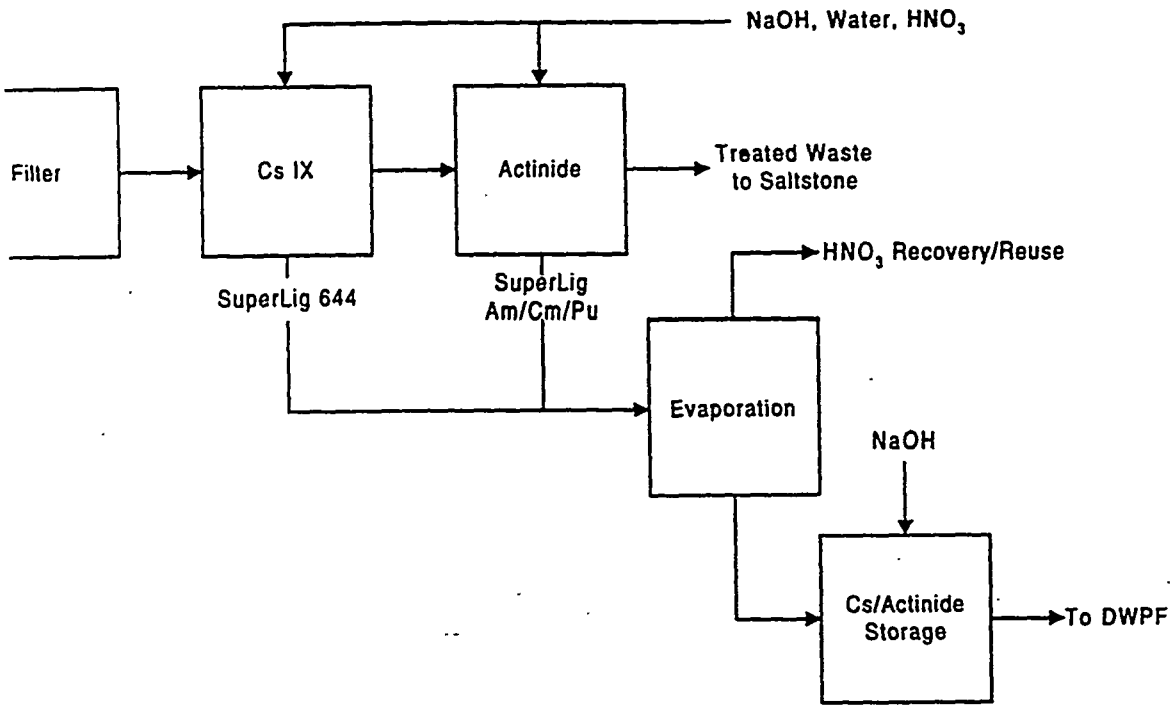

EXPLANATORY NOTES FOR "ALTERNATIVES PRO-FORMA"

ıtive # will be provided by Peter Hudson.

r could be originator, a suitable "champion" or a core team member.

HWL SALT DISPOSITION PROCESS ALTERNATIVES

Alternative #: EX13 **Sponsor:** Jack Watson

Title: Electrically Switched Ion Exchange

Description: This technology is being developed for removing Cs from solutions with moderate pH, probably OK for pH values possibly as high as 12. Cesium is loaded on a porous substrate on which a ferrocyanate is formed. These are highly selective ion exchange materials for Cs, but the materials are unstable in the high pH values of the current supernate. The unique aspect of this technology is the use of an applied electrical voltage to oxidize the iron in the sorbent from the II state to the III state. This requires the sorbent to lose a cation, the Cs. The cesium can then be eluted into water or very dilute acid. No regenerate solution is needed. Relatively small beds have been tested for 1000+ cycles (near neutral pH) with only moderate loss in sorption (ion exchange) capacity.

Technical Maturity:
This is a new technology that has developed from the proof-of-principal to bench scale testing. Development is continuing with the objective of improving the sorbent capacity by incorporating more ferrocyanate into a given volume of cell/bed volume.

Safety Issues Unknown

Advantages: Potentially a very compact unit. Regeneration is easy and effective. No reagents (Other than possible use of dilute acid) is added to the waste.

Disadvantages:
The material can not stand pH values of 14 + that occur in SRS supernate. Significant neutralization would be required.

Process Diagram (Optional)

INCLUDED IN EX10

HWL SALT DISPOSITION PROCESS ALTERNATIVES

Alternative #: EX 14 **Sponsor:** Jack Watson

Title: Alternate the pH so you can use other IX materials

Description: There are a number of ion exchange materials that are selective for cesium that are not stable in the very high pH values of the SRS tank supernate. As the pH of the supernate is lowered, more potential materials become available. For example ferrocyanates below pH of about 12 and AMP at pH values on the acid side (below neutral).

Technical Maturity:
This is not viewed as either a desirable approach or a mature technology, but it is worth keeping in mind that if the pH is lowered for any reason, other cesium removal materials become options.

Safety Issues Corrosion could be a problem if the pH were lowered too far in the existing tanks. If the pH were lowered in a new stainless steel tank, there may be no significant safety issues associated with this part of the treatment.

Advantages: Opportunity to use alternate ion exchange materials.

Disadvantages:
Corrosion (if in existing tanks). Acid consumption. Solids formation where aluminum and silica are present.

Process Diagram (Optional)

INCLUDED IN NX 11

This form is to be completed with Ed Cussler; so this material should be combined with the material that Ed prepares.

HWL SALT DISPOSITION PROCESS ALTERNATIVES

Alternative #: EX 15 **Sponsor:** Jack Watson

Title: Elutable IX

Description: Super-Lig is a solid adsorbent using attached crown ether-like or other ligand to selectively remove cesium ions from solutions like supernate. (The exact ligand used on the Super-Lig is patented and not known publicly; it is suppose that it is a crown ether or similar group.) Although this is not strictly an ion exchange process, it is included here with ion exchange options because there are many similarities in the operation and performance. Cesium probably can be removed from Super-Lig by strong acid (an ion exchange type removal) or by very dilute solutions with both the cesium and an anion leaving the Super-Lig (not an ion exchange type removal). Super-Lig is relatively expensive and would probably have to be used in regnerable columns.

Technical Maturity:

Super-Lig is manufactured commercially and has been tested for a number of Cs removal applications. The material is not believed to be routinely manufactured in large quantites, but probably could be manufactured at any scale needed.

Safety Issues No issues specific to this technology are known.

Advantages: Super-Lig is highly selective for cesium over sodium and has a fairly good selectivity for cesium over potassium. It has also gone through a considerable testing on similar problems. As a regenerable material, the Super-Lig can be reused several times, and the cesium could be recovered relatively free of any contaminant that would affect vitrification.

Disadvantages:

Like most organic sorbents and ion exchange materials, Super-Lig is subject to radiation as well as chemical degradation. Tests at ORNL on Melton Valley supernate showed a colored material leaving the column of Super-Lig that indicated significant degradation, probably from chemical rather than radiation induced degradation. There was some evidence that the "colored" degradation products affecte subsequent Tc removal that could have been important for Hanford applications. Are there any effects on subsequent Sr removal operations? Super-Lig is a moderately costly material and probably would have to be regenerated and reused several times to be practical.

Process Diagram (Optional)

INCLUDED IN EX 12

HLW SALT DISPOSITION PROCESS ALTERNATIVES

#33 at 3/24/98 Meeting

Alternative #: NX1 **Sponsor:** R.F. Bradley **Date:** 3/24/98

Originator: R. Foster Bradley **Phone #:** 2-9879

Title: In-Tank Sorption

Description: Add a non-organic sorbent (zeolite, etc.) to the waste tank to sorb Cs, etc. Use the centrifugal recirculating pumps to slurry the mixture out of the tank. This process is analagous to how we get the Sr & Pu in the sludge into the glass. The Sr & Pu has sorbed onto the $Fe(OH)_3$ and other inorganics in the sludge. This process emulates the sludge process by adding an inorganic to do the same thing that the sludge does with respect to Cs, etc.

Technical Maturity: Sorption of Cs on zeolite and other inorganic sorbents is well established technology (for example at Hanford). Sludge slurrying is well established technology at SRS.

Safety Issues: The sorbing material is inorganic. This precludes the generation of flammable organic vapors (such as benzene) that occurs with organics are added to the radioactive waste.

Advantages: Safe, proven inorganic sorption and slurrying process. Inorganic sorbents were the basis for the original flowsheets. This concept (direct addition to the waste tank) avoids the need for separate columns envisioned for the original flowsheet.

Disadvantages: Inorganic sorbents were abandoned at SRS for this process around 1980. Although there are no basic reasons that inorganic would not work, we have not looked at them for our supernate since 1980.

References: 1) ~~Advances in Chemistry Series 153, "High Level Radioactive Waste Mgmt.", M.H. Campbell, p. 14, (1976)~~ ← Sorption Process
2) ~~BNWL-1867 (1972)~~
3) ~~USAEC Report HW-76479 (1963)~~
4) DP-1335 (1973) by Wallace, Hull and Bradley

#33

Process Diagram (Optional)

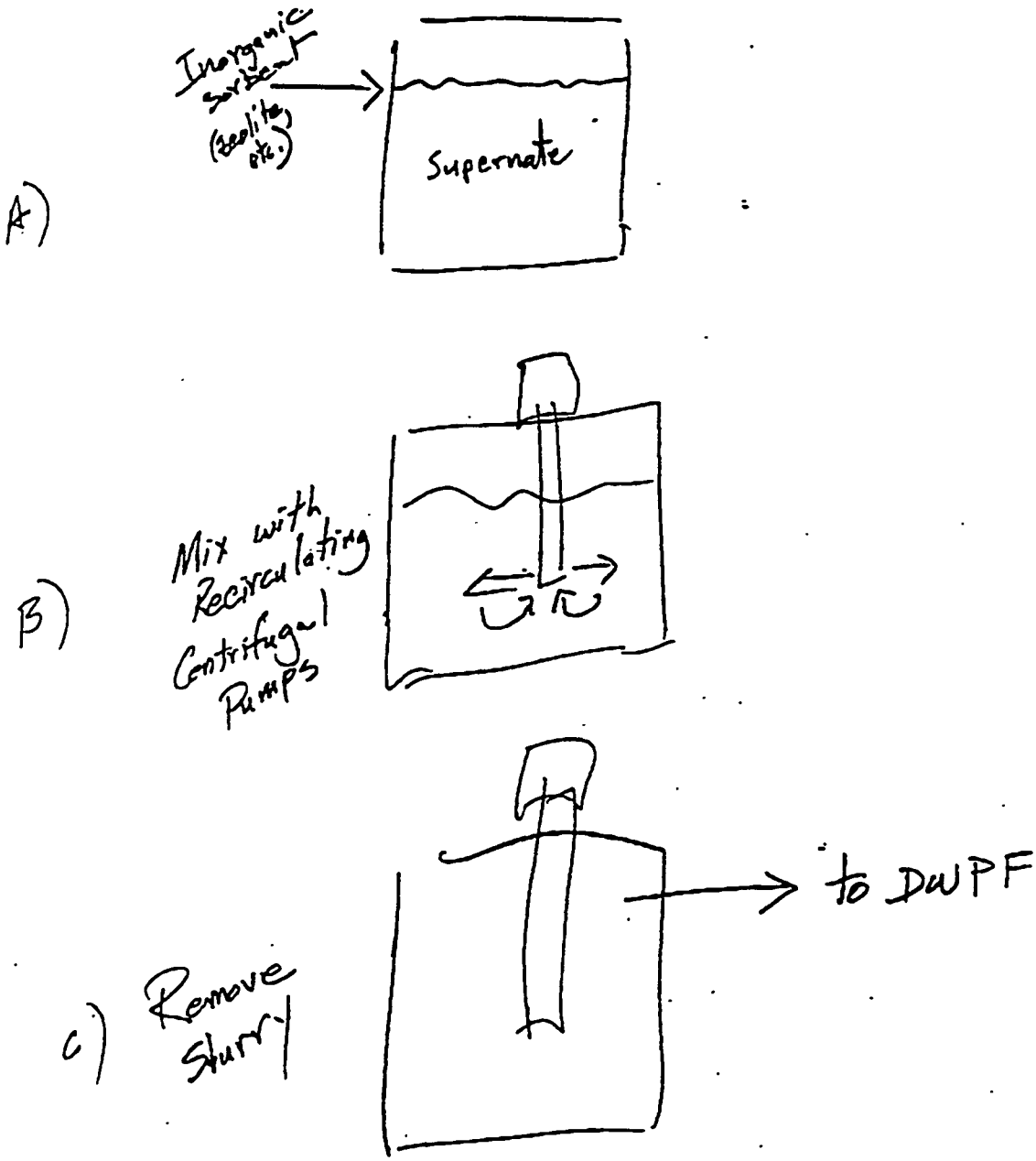

HLW SALT DISPOSITION PROCESS ALTERNATIVES

Alternative #: N X 2 Sponsor: J Fo Date: 3/25/98

Originator: J. F. ORTALDO Phone #: 8-6086

Title: NON-REGENERABLE ION EXCHANGE

Description: UTILIZE SUITABLE NON-REGENERABLE ION EXCHANGE RESINS TO REMOVE Cs, Sr, + Pu FROM SALT SOLUTIONS

Technical Maturity: PROBABLY SIMILAR TO REGENERABLE ION EXCHANGE RESINS BUT WITH ADDITIONAL SIGNIFICANT ISSUE OF DISPOSAL OF SPENT RESIN; SOME PILOT DEMO (SIMULATED AND RADIOACTIVE) REQUIRED

Safety Issues: ELIMINATES C_6H_6; OTHER HAZARDS (HNO3 ETC) SHOULD BE MANAGABLE; COULD BE ISSUE RELATED TO SPENT RESIN DISPOSAL EG FEED TO DWPF MELTER

Advantages: "CLEAN" FEED TO DWPF; NO C_6H_6 TO SYSTEM

Disadvantages: HIGH DEMO AND CONSTRUCTION COSTS; TIME DELAY. RESIN DISPOSAL COULD INTRODUCE SIGNIFICANT ORGANIC INTO SYSTEM

HLW SALT DISPOSITION PROCESS ALTERNATIVES

Alternative #: NX3 Sponsor: JFO Date: 3/24/98

Originator: J. F. ORTALDO Phone #: 8-6086

Title: CRYSTALLINE SILICOTITANATE (CST)

Description: UTILIZE CST AND OTHER SUITABLE ION EXCHANGE RESINS TO DECONTAMINATE SALT; FEED CST AND OTHER IX EFFLUENTS TO DWPF

Technical Maturity: DEMOED ON SMALL SCALE AT OAK RIDGE FOR Cs REMOVAL; MINIMAL DEMO OF CST TO PRODUCE DWPF GLASS (CRUCIBLE SCALE ONLY); SIGNIFICANT PILOT SCALE DEMO NEEDED FOR SALT TREATMENT AND DWPF DISPOSAL

Safety Issues: SAFETY ISSUES PROBABLY MANAGABLE; EFFECT OF CST ON H_2 GENERATION AT DWPF UNKNOWN

Advantages: SHOULD ELIMINATE MOST OF ORGANICS FROM HLW SYSTEM.

Disadvantages: HIGH DEMO AND CONSTRUCTION COSTS; HIGH OPERATING COST (RAW MATERIALS); TIME REQUIRED FOR DEMO AND CONSTRUCTION

HLW SALT DISPOSITION PROCESS ALTERNATIVES

Alternative #: NX 4 Sponsor: JFO Date: 3/24/98

Originator: J. F. ORTALDO Phone #: 8-6086

Title: CRYSTALLINE SILICOTITANATE (CST) WITH CST AS "PERMANENT" STORAGE MEDIUM FOR CS

Description: UTILIZE CST AND OTHER SUITABLE ION EXCHANGE RESINS TO DECONTAMINATE SALT. CST IS NOT FED TO DWPF BUT IS UTILIZED AS PERMANENT MEDIUM FOR Cs. (Cs 137 IS ESSENTIALLY GONE IN ≈ 300 YR)

Technical Maturity: Cs REMOVAL DEMONSTRATED ON A SMALL SCALE AT OAK RIDGE; ACCEPTABILITY AS LONG TERM Cs STORAGE MEDIUM UNKNOWN

Safety Issues: SAFETY ISSUES PROBABLY MANAGABLE NO EFFECT ON DWPF

Advantages: NO ORGANICS INTRODUCED TO HLW SYSTEM; DECOUPLED FROM DWPF

Disadvantages: HIGH DEMO AND CONSTRUCTION COSTS; TIME DELAY; COMPLICATES WEAPONS PU DISPOSAL IN CAN-IN-CAN OPTION; PERMITING FOR DISPOSAL FEASIBILITY NOT KNOWN AT THIS TIME.

HLW SALT DISPOSITION PROCESS ALTERNATIVES

Alternative #: N X 5 Sponsor: Hank Elder Date: 3/26/98

Originator: (?????) Phone #: 208-6049

Title: Cesium removal by Countercurrent Processing with CST.

Description:
(1) Add NaTi2O5H to dissolved salt to sorb Pu and Sr(Tank Farm). Filter.
(2) Pass solution through several stages of stirred contacters. This could be a semi-continuos process by overflowing the solution stage to stage and moving the CST batchwise when the CST in the 1st (salt solution) stage is loaded.

Note: This could easily be an enhance to any other flowsheet at the point at which you wish to separate Cs from very hot salt (e.g. the last step in Fractional Crystallization). This would reduce the salt loading in glass.

Technical Maturity: Equipment / Process Technology for several alternative ways to do this are a commonplace in the chemical industry.

Safety Issues: NO new ones are apparent. Again, DWPF would be handling a relatively small quantity of screaming hot material. The total activity is within the design basis, concentration is higher.

Advantages: This improves the Cs loading and reduces the glass volume versus several of the other alternatives. It is insensitive to particles in the solution, unlike many column IX processes.

Disadvantages: Much process development required. This flowsheet will not be efficient when the Cs level is low in a stream, because the loading on the CST will be low.

HLW SALT DISPOSITION PROCESS ALTERNATIVES

Alternative #: NX6 **Sponsor:** Crosby **Date:** 8/26/98

Title: Crowns

Description: Crown compounds, for which Pedersen and Cram were awarded a Nobel prize, offer ~~exq~~ superb selectivity for complexing species like cesium. They can provide a much more selective type of ion exchange. One example, selective for K^+, is

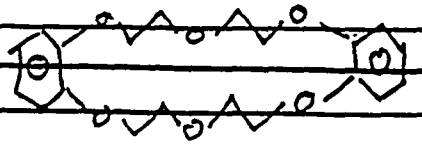

The "superligand" is another

Technical Maturity: Fair ~~Poor~~. While the chemistry is known, the technology is not. It's not even clear if we want to use this in extraction or ion exchange.

Safety Issues: No major ones.

Advantages: The selectivity is unrivaled: even isotopes can be separated

Disadvantages: Cost and final form. The materials cost an unknown but large amount. The current molecules would need to be bound to a solid matrix. Regeneration and lifetimes are unknown.

Alternative #: N×7 Sponsor: D.J. McCabe (THOSAITS)

Title: CST Ion Exchange; Storage of loaded CST

Description: (a) Prefilter; (b) Ion Exchange using CST for Sr, Pu, Cs; (c) loaded CST is stored in a vault as a solid. Mercury-removal will be required for some tanks to meet the Saltstone WAC.

Reference: Demonstrated at 1.5 cu.ft. scale with MVST supernate at ORNL

Technical Maturity: Decontamination factor of 40,000 not demonstrated at ORNL due to high flow rates. Material can be produced on large scale. Tested extensively on laboratory scale at ORNL, SRS, PNNL, and Sandia.

Advantages: Inorganic structure reduces radiolytic and chemical decomposition problems; Simple operation, no elution; One material for all radionuclides; High capacity for Cs; Glass requalification not required.

Disadvantages: High dose rate for loaded material; Moderate cost of material; Transport of slurry difficult due to high density of solids; Absence of high dose rate for vitrified product desired for non-proliferation; Product may be TRU; Storage issues.

Safety Issues: High dose rate; Hydrogen generation rate.

Key Initial Tests: IX column tests; Hydrogen G-value for loaded material.

Process Diagram (See reverse side):

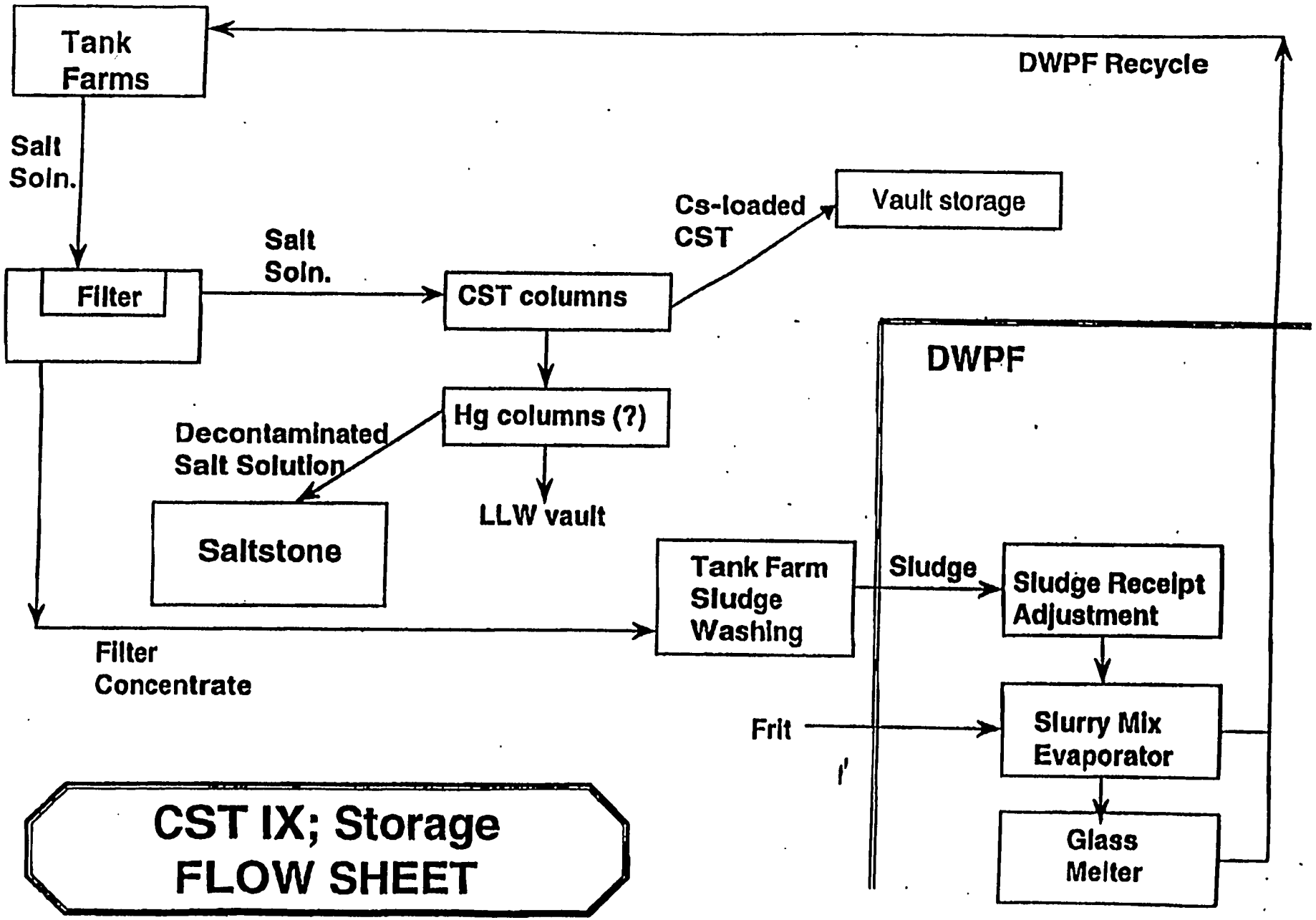

CST IX; Storage FLOW SHEET

Alternative #: N× 8 Sponsor: D.J. McCabe (Trasuitz)

Title: CST Batch Mixing; Vitrification or Storage of loaded CST

Description: (a) Prefiltration; (b) Ion Exchange using CST for Sr, Pu, Cs using a 9-step "batch and stir" or counter-current decanter method; (c) Loaded CST is vitrified in DWPF or stored without further treatment. Mercury-removal will be required for some tanks to meet the Saltstone WAC. Fewer "batch and stir" steps are needed if material is stored instead of vitrified, due to titania limits in glass.

Reference: "Batch & Stir" method not demonstrated other than single-step Kd tests.

Technical Maturity: Decontamination factor of 40,000 not demonstrated, but theoretically possible.

Advantages: Inorganic structure reduces radiolytic and chemical decomposition problems; Simple operation, no elution; One material for all radionuclides; High capacity for Cs; IX columns not needed.

Disadvantages: High dose rate for loaded material; Moderate cost of material; Transport of slurry difficult due to high density of solids; If not vitrified, absence of high dose rate for vitrified product desired for non-proliferation; If vitrified, limited solubility in glass; Product may be TRU; Shearing of material during transport may prevent good solid-liquid separation and prohibit decontamination; Glass requalification required if vitrified; Storage issues if not vitrified.

Safety Issues: High dose rate; Hydrogen generation rate.

Key Initial Tests: IX column tests; Hydrogen G-value for loaded material.

Process Diagram (See reverse side):

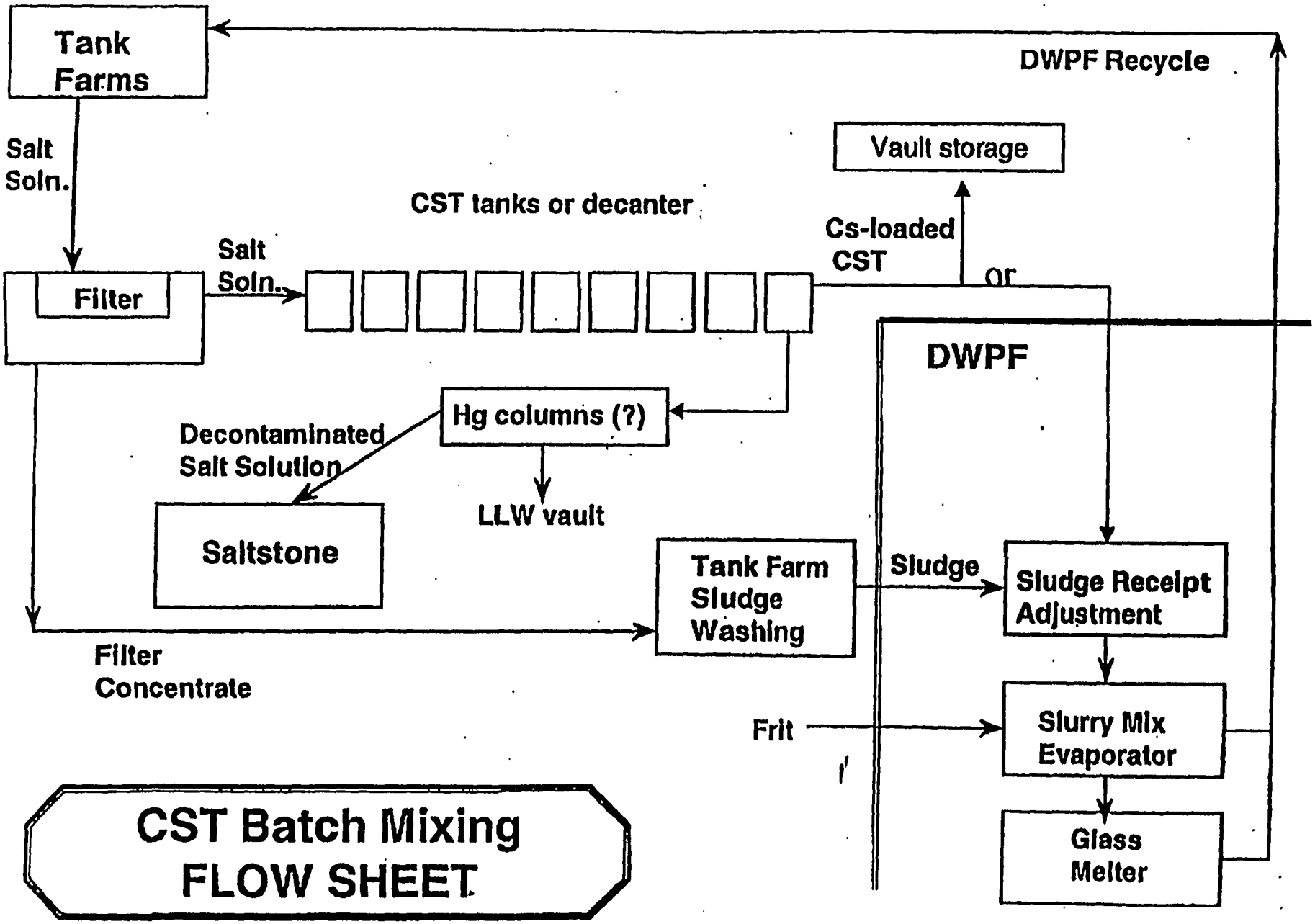

CST Batch Mixing FLOW SHEET

HLW SALT DISPOSITION PROCESS ALTERNATIVES

Alternative #: NX 9 Sponsor: W.L. TAMOSAITIS

Title: Zeolite Ion Exchange, Vitrification

Description: (a) Prefilter; (b) Ion Exchange using TIE-96 zeolite for Pu, Sr; (c) Ion Exchange using IE-96 zeolite for Cs; (d) loaded zeolite is mixed with sludge and vitrified in DWPF. Mercury-removal will be required for some tanks to meet the Saltstone WAC.

Reference: In use at West Valley on alkaline Purex tank waste.

Technical Maturity: Demonstrated at plant scale

Advantages: Demonstration complete; Inexpensive IX material;

Disadvantages: Low removal efficiencies require large IX columns; Zeolite may be incompatible with highly alkaline tank wastes; Large glass volume; High glass viscosity; High titania loading in glass; Glass requalification probably required.

Safety Issues: none

Key Initial Tests: Chemical compatibility in alkaline simulant; Decontamination factor determination for Sr, Pu, Cs;

Process Diagram (See reverse side):

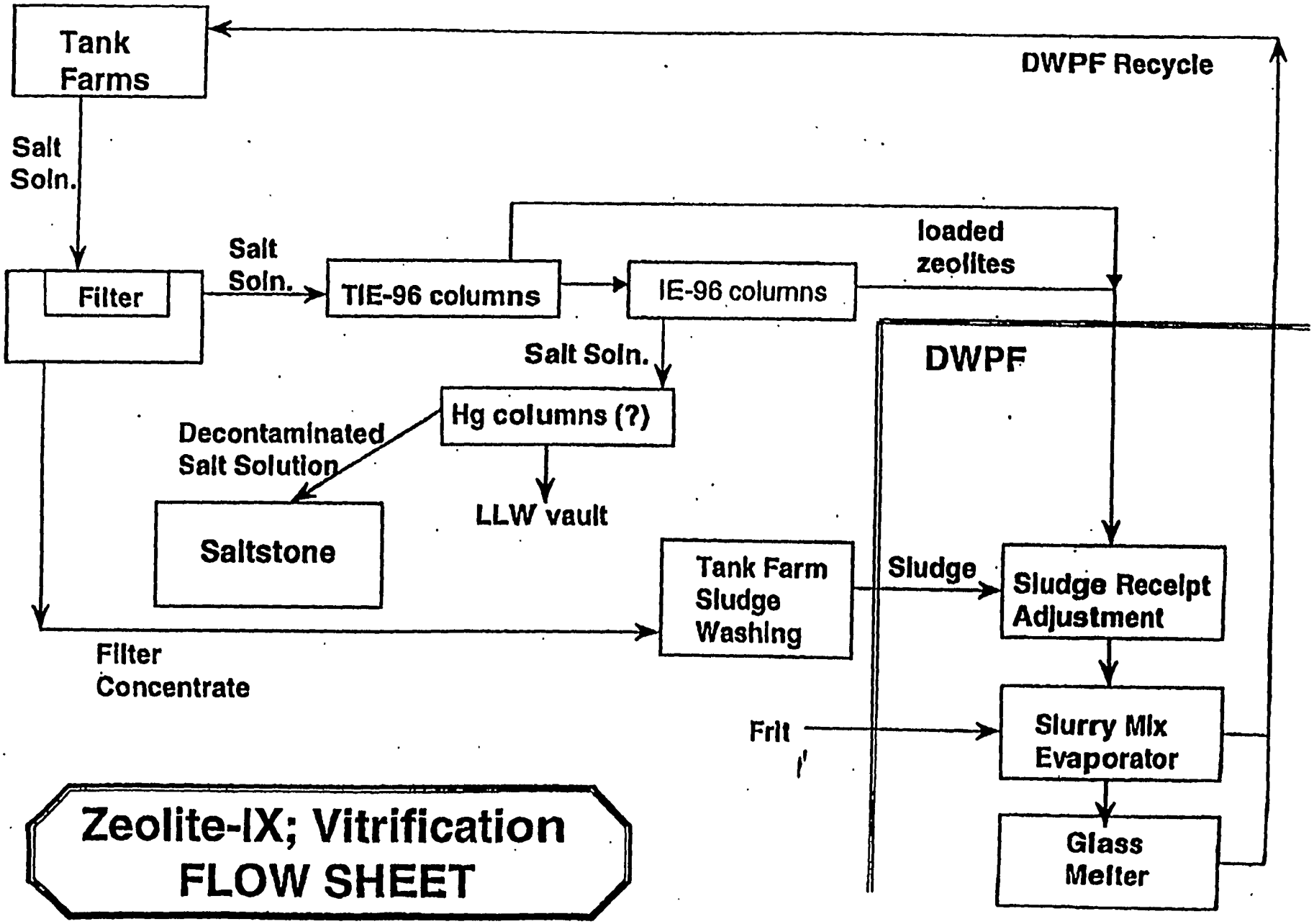

Zeolite-IX; Vitrification FLOW SHEET

Alternative #: NX 10

Sponsor: D.J. McCabe (THERMITIS)

Title: CST Ion Exchange; Vitrification

Description: (a) Prefilter; (b) Ion Exchange using CST for Sr, Pu, Cs; (c) loaded CST is vitrified in DWPF. The CST may be mixed with sludge for vitrification, or may be vitrified without sludge. Mercury-removal will be required for some tanks to meet the Saltstone WAC.

Reference: Demonstrated at 1.5 cu.ft. scale with MVST supernate at ORNL

Technical Maturity: Decontamination factor of 40,000 not demonstrated due to high flow rates in large columns. Material can be produced on large scale.

Advantages: Inorganic structure reduces radiolytic and chemical decomposition problems; Simple operation, no elution; One material for all radionuclides; High capacity for Cs.

Disadvantages: High dose rate for loaded material; Limited solubility in glass when mixed with sludge; Moderate cost of material; Transport of slurry difficult due to high density of solids; Shearing of material in pumps; Glass requalification probably required.

Safety Issues: High dose rate; Hydrogen generation rate.

Key Initial Tests: IX column tests; Vitrification with DWPF frit and SRS sludge.

Process Diagram (See reverse side):

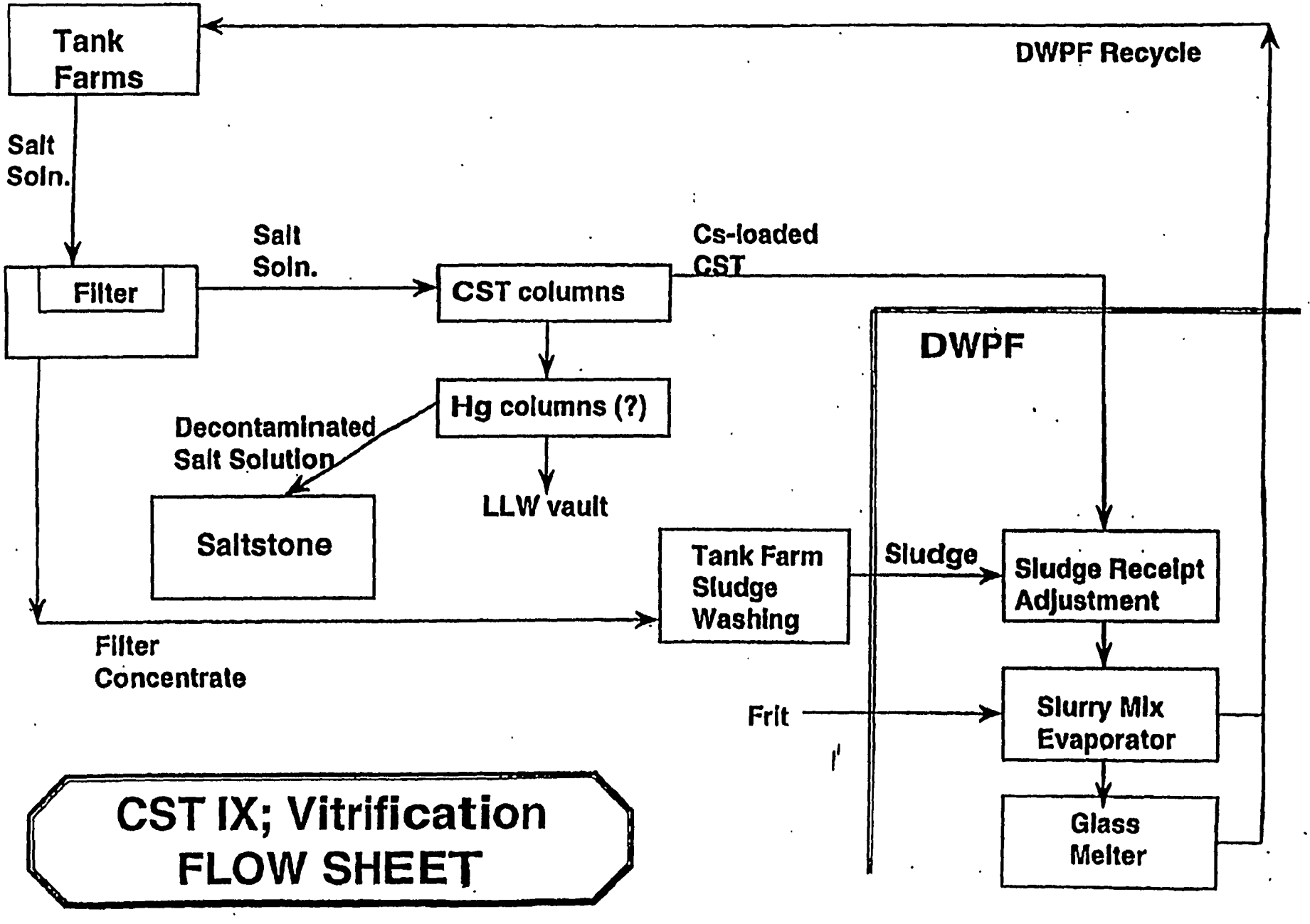

CST IX; Vitrification FLOW SHEET

Alternative #: NX 11 Sponsor: Zamorskes

Title: Acid-side Ion Exchange

Description: (a) Add MST and prefilter supernate; (b) acidify supernate; (c) remove Cs with IX columns of Potassium cobalt hexacyanoferrate or Ammonium Molybdophosphate on Polyacrylonitrile; (d) store cesium-loaded material.

Reference: Laboratory testing for INEEL calcine and sodium-bearing wastes.

Technical Maturity: Limited laboratory-scale testing performed with simulated waste

Advantages: Inexpensive ion exchange material; very high Kd for Cs.

Disadvantages: Large nitric acid quantity needed; Saltstone process incompatible with acid solution; NOx emission; Storage of cesium on this material is not demonstrated; Absence of high dose rate for vitrified product desired for non-proliferation; Complex operation; Additional process step.

Safety Issues: "Red oil" explosion potential; hydrogen generation rate for cesium-loaded resin.

Key Initial Tests: Kd test with acidified simulant and actual waste.

Process Diagram (See reverse side):

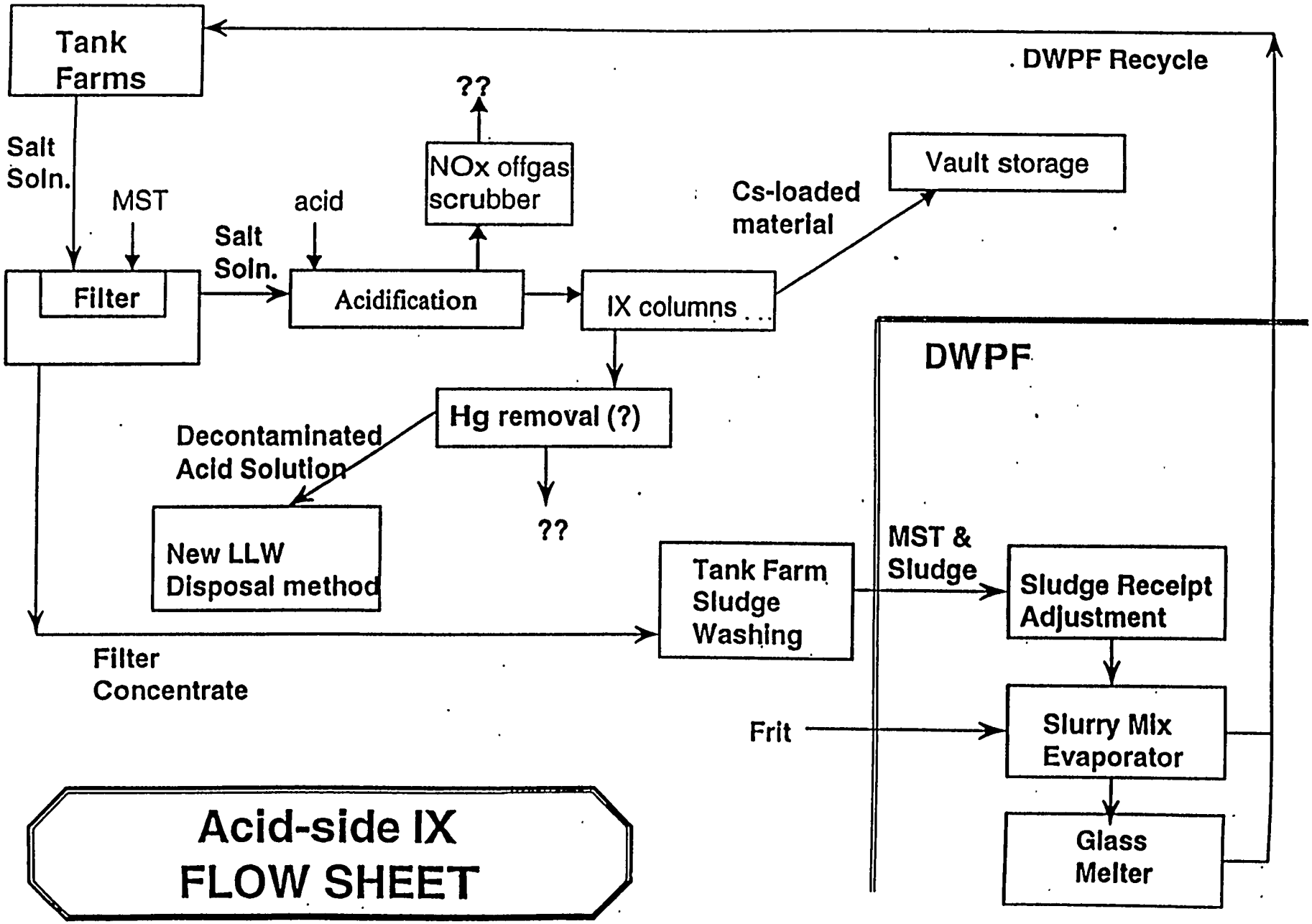

Acid-side IX FLOW SHEET

HLW SALT DISPOSITION PROCESS ALTERNATIVES

Alternative #: NX 12 Sponsor: Zomosa et al

Title: Magnetic Separation using Cesium Specific Media

Description: Cesium isolated from solution by specific ion exchange or adsorptive media. (Examples of media used include iminodiacetate (IDA), acrylic, and NASA resins.) Media present on particles with magnetic core, using a proprietary manufacturing technology. Technology to make the particles exist with several vendors but SELENTEC, Inc. (Atlanta, GA) likely possesses the most extensive experience related to this application. Any of several media candidates for usage; only a few material currently developed at bench scale with fewer manufactured to data in larger-scale batches. Based on recent particle development and testing, SELENTEC personnel suggested that SRTC test current particles for the treatment of High Level Waste.

Reference: Technology Deployed at Limited Scale on Groundwater and Specialty Waste Applications (Most Notable: Radionuclide Removal from Contaminated Milk near Chernobyl)

Technical Maturity: Technical feasibility stage; laboratory testing of optimal materials.

Advantages:

Disadvantages: Extraction of particles by magnet does not remove sludge or titanate from waste. Particle manufacture not developed at required scale.

Safety Issues Inadequately defined: handling loaded particles poses rad concerns.

Key Initial Tests: Feasibility test with current particles from SELENTEC.

Process Diagram (Optional, see reverse side) Not provided.

HLW SALT DISPOSITION PROCESS ALTERNATIVES

Alternative #: NX13 Sponsor _____ Date: 3/24/98

Originator: M. K. Andrews and J. R. Harbour Phone #: 5-5253

Title: CST ION EXCHANGE: COUPLED FLOWSHEET

Description: Use CST to remove the Cs-137, Sr-90, and possibly the transuranics from the SRS HLW supernate. Perform this using ion exchange columns as proposed by Dan McCabe. CST is effective in removal of Cs-137 from the highly basic supernate. This has been demonstrated extensively throughout the complex and also in batch studies at DWPF. The Cs-137 loaded CST will then be mixed with the HLW sludge and vitrified in the DWPF melter as a coupled feed.

Glass formulation development has led to frit compositions which will incorporate 28 wt% sludge oxides and on the order of 5 to 10 wt% CST. This loading of CST in the glass is high enough to incorporate all of the Cs-137 from the supernate in a balanced depletion with the HLW sludge.

Technical Maturity: Extensive testing of CST on both surrogate and radioactive materials at virtually every major Site in the DOE Complex as a feasible way in which to remove Cs-137 from supernates. Glass formulations have been developed at SRTC by Mary Andrews and Phyllis Workman which readily incorporate sufficient levels of CST and sludge into the borosilicate glass.

Safety Issues:

Advantages: High efficiency removal of Cs from supernates and direct incorporation of CST into the glass without increasing the volume of high level waste are significant advantages

Disadvantages: The loading of Cs-137 on CST will vary depending upon the Cs concentrations in the supernate. This in turn will lead to variations in the Cs-137 content per canister. This can be offset somewhat by varying the amount of CST incorporated into the glass and/or blending of the supernate.

HLW SALT DISPOSITION PROCESS ALTERNATIVES

Alternative #: N X 14 Sponsor:__ Date: 3/24/98

Originator: M. K. Andrews and J. R. Harbour Phone #: 5-5253

Title: CST ION EXCHANGE: PARALLEL FLOWSHEET

Description: Use CST to remove the Cs-137, Sr-90, and possibly the transuranics from the SRS HLW supernate. Perform this using ion exchange columns as proposed by Dan McCabe. CST is effective in removal of Cs-137 from the highly basic supernate. This has been demonstrated extensively throughout the complex and also in batch studies at DWPF. The Cs-137 loaded CST will then be vitrified in a separate melter system.

Glass formulation development has led to frit compositions which will incorporate 60 wt% CST. Thus, a relatively small melter could be used to incorporate the Cs-137 into a borosilicate glass matrix. The wide range of loadings possible provide a great deal of flexibility in terms of the final Curie loading in the glass. The smaller glass containers could be incorporated into the DWPF canisters (can-in-can methodology) or stored temporarily. The half-life of Cs-137 is roughly 30 years.

Technical Maturity: Extensive testing of CST on both surrogate and radioactive materials at virtually every major Site in the DOE Complex as a feasible way in which to remove Cs-137 from supernates. Glass formulations have been developed at SRTC by Mary Andrews and Phyllis Workman which readily incorporate very high levels of CST into the borosilicate glass. A radioactive demonstration in the shielded cells melter at ~52 wt% CST in glass was accomplished successfully.

Safety Issues: High dose rates from the concentration of the Cs-137 on the CST powder.

Advantages: High efficiency removal of Cs from supernates and direct incorporation of CST into a stable, immobilized glass waste form.

Disadvantages: Separate melter system required

HLW SALT DISPOSITION PROCESS ALTERNATIVES

Alternative #: NX 15 Sponsor: _____ Date: 3/23/98

Originator: George T. Deeble Phone #: 8-1428

Title: Replace One or Both Filters with Ion-Exchange Resin Beds

Description: From inlet nozzle to outlet nozzle of each filter system, we have a capacity of over 1440 cubic feet (18' x 10' x 8') in which to place an ion-exchange filter with associated appurtenances (such as inlet piping, outlet piping, flush system piping). Salt solution would be recirculated between Tank 48 and the Resin Bed. Once the resin bed is filled to capacity with cesium and strontium, it would be flushed back to Tank 48 with motive force provided by the Backpulse System and one of the hold tanks. The other hold tank would be used to store fresh resin slurry, and the hold tank pumps used to flush and replenish the resin bed. Once the salt solution is decontaminated to the allowable Saltstone limits, it would be jetted from Tank 48 to Tank 50, and from Tank 50 the solution would be transferred to the Saltstone Facility. The spent resin would be pumped in slurry form to DWPF. Per Page 26 of the July 13, 1992 addition of "Chemical and Engineering News" (C&EN), Sandia National Laboratory and Texas A&M University scientists developed silico-titanate based materials that have the property of selectively extracting cesium and from solution.

Technical Maturity: Resin Beds are the primary components of the "Reactor Water Cleanup System in commercial Boiling Water Reactors. The current technology of these systems provide remote means of flushing spent resin from the resin beds and replenishing the beds with fresh resin. Hence implementation of this recommendation would involve a substantial use of current technology.

Safety Issues: We need a means to ensure that spent "cesium-laden" resin for migrating to any components inside the Hold Tank Room and Stripper Building since these areas are not shielded for highly-active materials such as Cesium-137.

Advantages: This alternative would involve an extensive use of current technology.

Disadvantages: I don't know how much resin is required to optimize the process and whether there has to be a "threshold" quantity of resin in the bed to make the process work. I don't know the impact to DWPF of transferring substantial quantities of spent resin to the vitrification process. Also, the embedded return lines from the filters to Tank 48 are 3 inches in diameter. I don't know whether they are sufficiently sized to prevent spent resin from accumulating and packing the lines.

Cesium Cut from Radioactive Waste

A new class of materials that can selectively extract cesium from solutions has been developed by scientists at Sandia National Laboratories, Albuquerque, N.M., and Texas A&M University, College Station. The materials, called silico-titanates, have potential applications in cleaning up radioactive wastes. The new compounds were developed by Robert G. Dosch, a chemist at Sandia, and Rayford G. Anthony, a chemical engineering professor at Texas A&M.

The silico-titanates have up to 60 times the efficiency of a model zeolite compound for removing cesium from radioactive wastewater solutions containing very high sodium concentrations, according to the researchers who developed them. As such, they may find use in treating radioactive wastes that contain high concentrations of cesium-137 and salt, such as those stored at the Hanford nuclear research facility near Richland, Wash.

The discovery of the silico-titanates, which are also known as crystalline titanates, grew out of work in the mid-1970s on immobilizing high-level radioactive waste in ceramic form, according to Howard P. Stephens, manager of Sandia's process research department. Materials developed at Sandia in the course of that research—hydrous titanate ion exchangers—turned out to be highly effective in removing strontium and plutonium from radioactive waste. Hydrous titanate ion exchangers are now in large-scale use at the Savannah River nuclear fuels production site in South Carolina, Stephens says.

Subsequently, Sandia scientists studied the hydrous titanates as possible catalysts for coal liquefaction and upgrading heavy crude oils. While on sabbatical, first at Sandia and later at Texas A&M, Anthony and coworkers carried out further modifications of the Sandia materials to produce the new class of crystalline titanates. The layered structure of these compounds suggested possible application in the radioactive waste area, Stephens says.

Dosch discovered that when the layers in the silico-titanate crystals are separated by about 8 Å, the materials become very selective for cesium over the smaller sodium ions. When the spacing is increased, the selectivity for cesium disappears. "This suggests that sium fits tightly between the pl the crystal," Stephens says. In the cesium ions are sandwich tween layers of the crystalline m whereas smaller sodium ions freely through the crystal.

Because it emits gamma radiati sium-137 is a particular headache gineers trying to clean up radi wastes, Stephens points out. Even containing only low concentration sium-137 must be isolated by shielding for treatment. "If you ca rate the cesium-137 out first an treat the waste, you reduce the shi problems, and therefore the cos stantially," Stephens says.

According to Sandia, radio wastes stored at the Hanford site t ly consist of three layers: on the b of the tank a layer of sludge, cove a layer of water-soluble salt cake, t by a layer of liquid. Cesium-137 i centrated in the top two layers.

One method for treating these involves adding water to liquefy thing in the tank except the sludg then adding a combination of the phous hydrous titanates and th crystalline titanates. This mixture combine with both cesium-13 strontium-90, which are, respect the primary gamma radiation s and the heat producer in the wast radionuclides would sink to the b allowing the top part of the solut be treated as a low-level radio waste or a chemical waste.

Another method calls for pun the contents out of a tank thro column containing the titanates radionuclides would be trapped i column, while the rest of the would flow through for subse treatment.

The titanate materials containin cesium-137 and strontium-90 cou ther be incorporated into a vit waste form or converted to a mon ic ceramic. According to Sandia, p disclosures have been filed on th co-titanates and the processes us develop them.

Rudu

Robert G. Dosch photo

Transmission electron micrograph shows silico-titanate's selectivity for cesium ions over sodium ions derived from 8Å spacing between crystal layers

HLW SALT DISPOSITION PROCESS ALTERNATIVES

Alternative #: HX16 **Sponsor:** Ken Rueter **Date:** 2/19/98

Originator: JOHANN RETTER **Phone #:** 86168/PACER 18096

Title: BENZENE REDUCTION AND ION EXCHANGE

Description: ① REDUCE BENZENE CONCENTRATION IN THE WASTE BY USE OF NITROGEN SPARGERS AND/OR HEATING COILS IN CONJUNCTION WITH A CONDENSER (BENZENE) DECANTER OR BENZENE VAPORS COULD FLOW TO NORMAL TANK VENTILATION EXHAUST OR UTILIZE STRIPPER BLDG. EXHAUST. IF CONDENSER/DECANTER IS UTILIZED THE LIQUID BENZENE COULD BE BURNED BY CIF ② USE SPECIFIC ISOTOPE ION EXCHANGE RESIN INSTEAD OF PRECIPITATION TO REMOVE RADIONUCLIDES IN DWPF SALT CELL ③ SPECIFIC ISOTOPE ION EXCHANGE RESIN USE A GLASS MATRIX AND WOULD REQUIRE TO BE TRANSPORTED TO DWPF HELTER ONCE LOADED BY CS-137/Sr-137/Pu/Sr ~~%~~ POWDERIZED/POWDERIZED TO FINE AND MIXED TO SALT (REMOVED) ④ STOP THE ADDITION OF STPB. ⑤ NO_2 AND NO_3 COULD ALSO BE REMOVED BY ION EXCHANGE AT THE LATE WASH FACILITY OR BY THE AS DESIGNED LATE WASH FACILITY

Technical Maturity: ① FULLY COMMERCIALIZED - SEE LATEWASH NITROGEN SPARGER/PVV AND DWPF SALT CELL VENT CONDENSER/PVV AND ORGANIC WASTE SYSTEMS ② FULL NUCLEAR OPERATION - CONTACT DURATEK MAKERS OF SPECIFIC ION EXCHANGE RESIN ③ TRANSPORT SYSTEMS INCLUDE SLURRYING ~~[illegible]~~ RESIN (~~[illegible]~~) USING A RECIRCULATING WATER/EDUCTOR TRANSPORT SYSTEM - FULL NUCLEAR OPERATION.

(FOR FUTURE TANKS NOT ALREADY IN PROCESS PROJECT)

Safety Issues: SAME AS EXISTING, EXCEPT BY REDUCING BENZENE CONCENTRATION AND CURTAILING STPB USE SAFETY ↑ & RISKS ↓. PRECISE FLOW CONTROL REQUIRED FOR NITROGEN SPARGING AND STEAM FLOW TO COILS COULD ↑ RISKS.

Advantages: SIMPLICITY COST, USE OF EXISTING FACILITIES & SYSTEMS COMBINING OF GLASS RESIN BEADS WITH THE CS-137 WOULD BASICALLY REMOVE THE OFFENDING PROCESS (IT PRECIPITATION) FROM THE WASTE STREAM. MINOR MODS TO TANKS 48 & 49. ONCE THRU PROCESSING VS. CONCENTRATION BY FILTRATION.

Disadvantages: EXTENSIVE MODIFICATIONS REQUIRED TO DWPF SALT PROCESSING CELL (REMOVE EXISTING EQUIPMENT) AND MODS TO TANK VENTILATION/STRIPPER BOILING VENTILATION EXHAUST OR STEAM/STEAM COILS AND OR NITROGEN SPARGER SYSTEM.
SPECIFIC ISOTOPE RESIN COST ≈ $1000/FT³ IN 1987. TODAYS COST NOT KNOWN.

HLW SALT DISPOSITION PROCESS ALTERNATIVES

Alternative#: N x 17 Sponsor: J. P. Morin Date: 3/1798

Originator: J. P. Morin Phone #: 83214

Title: In-Riser CST Ion Exchange Direct Disposal Process Option

Description:
This process uses Crystalline Silicotitanate (CST) Ion Exchange media in a system of ion exchange (IX) columns located within one or more waste tank risers. The length, diameter and flow rate of the IX columns would be designed to achieve an effective ^{137}Cs decontamination factor of ~40,000. Dissolved salt and supernate would be pumped once through the column system and sent to saltstone. The CST would be sluiced into and out of the columns as needed during salt processing. Loading of Cs onto the CST would be controlled so as to produce a stable dry end state material capable of being sent directly to the Nevada Test Site without further processing at SRS.

Location of the columns within the waste risers provide shielding for the process. Shielded facilities would need to be provided to accommodate the sluiced Cs loaded CST end product. The column system could be designed to be moved from tank to tank as needed to process salt and supernate. Multiple systems could be in use in several tanks at the same time.

It is expected that prefiltration will be needed upstream of the IX columns to remove sludge fines in the feed. A "sand" filter column using appropriately sized iron granules. could be used as a filter media. This filter media could be periodically backwashed using decontaminated salt solution or could be magnetically separated.

It may also be necessary to remove mercury in a separate non-shielded IX column located on the tank top.

Technical Maturity:
CST has been extensively studied for alkaline Cs removal over the past decade. An IX process using CST has been piloted on an engineering scale and is in use at full scale at Oak Ridge to process tank waste. Oak ridge is meeting the waste acceptance criteria for transportation and direct disposal of loaded CST at the Nevada Test Site.

Safety Issues:
CST has none of the attendant safety issues associated with organic media for removal of ^{137}Cs. If CST is fully loaded with ^{137}Cs, the resulting end state will be of the order of

3000 Ci/gal and will require extensive shielding. Controls will need to be in place to prevent full loading or requisite shielding will need to be incorporated into the design of the process.

Advantages:
There are many advantages to this process:
1) Direct disposal of the end state product would decouple this flowsheet from nearly all of the downstream HLW flowsheets. Saltstone is the only downstream flowsheet with an interface to this process and the decontaminated salt solution is expected to be free of any decomposition products. Late wash and the DWPF salt cell would not be needed and CIF would not be needed to burn benzene. Recycle of organics to the tank farm would be eliminated.
2) This process could be designed to move from tank to tank as needed and operated in several tank simultaneously as needed.
3) This process is based entirely on inorganic chemistry without any of the attendant issues associated with organics.
4) No changes would be needed in the present glass formulation and qualification.

Disadvantages:
At the present time, there is only one vendor of the engineered form of CST and the cost of the media appears to be arbitrarily set at the equivalent molar cost of TPB Cs removal.

HLW SALT DISPOSITION PROCESS ALTERNATIVES

Alternative #: NX 18 **Sponsor:** Papouchado **Date:**

Title: Cesium Removal with CST and storage in stainless steel tank

Description: Build a stainless steel (double walled, below ground) tank with IX columns which can be loaded with resin and then released into the tank.
The salt solution feed would first be treated with Sodium Titanate then filtered in ITP to remove any Sr or Pu as needed.

Technical Maturity: Tested at the pilot scale with real waste at Oak Ridge

Safety Issues: Radiolysis of water from loaded CST

Advantages: Avoid any corrosion issues inherent with Carbon Steel tanks. Would have monitored, retrievable disposal for 300 years (10 half lives for Cs-137). More acceptable to stakeholders. Fewer glass canisters, reduced life cycle costs. Cesium does not elute (leach) from CST.

Disadvantages: More expensive than using existing tanks.

HLW SALT DISPOSITION PROCESS ALTERNATIVES

Alternative #: NX18.1 Sponsor: TEAM Date: 4-7-98

Originator: J.L. Barnes Phone #: 7-4466

Title: CST for Cs Removal & Temperature Tolerant Waste Form

Description: Sodium Titanate for Pu & Sr removal, filter solution with sludge slurry going to DWPF. Mix CST with filtrate to sorb Cs, filter solution with salt solution to Saltstone. Add ceramic agents to CST mix and store in stainless steel tanks for 300 yrs & recover OR store in canisters suitable for shipment to Yucca Mountain.

Technical Maturity: Tested at pilot scale w/ real waste @ Oak Ridge

Safety Issues: Radiolysis of water from loaded CST. Permitting issues.

Advantages: Avoid corrosion concerns inherent with carbon steel tanks. Could have monitored, retrievable disposal for 300 yrs (10 half lives for Cs-137). Fewer glass canisters

Disadvantages: More expensive. More ceramic canisters.

Process Diagram (Optional)

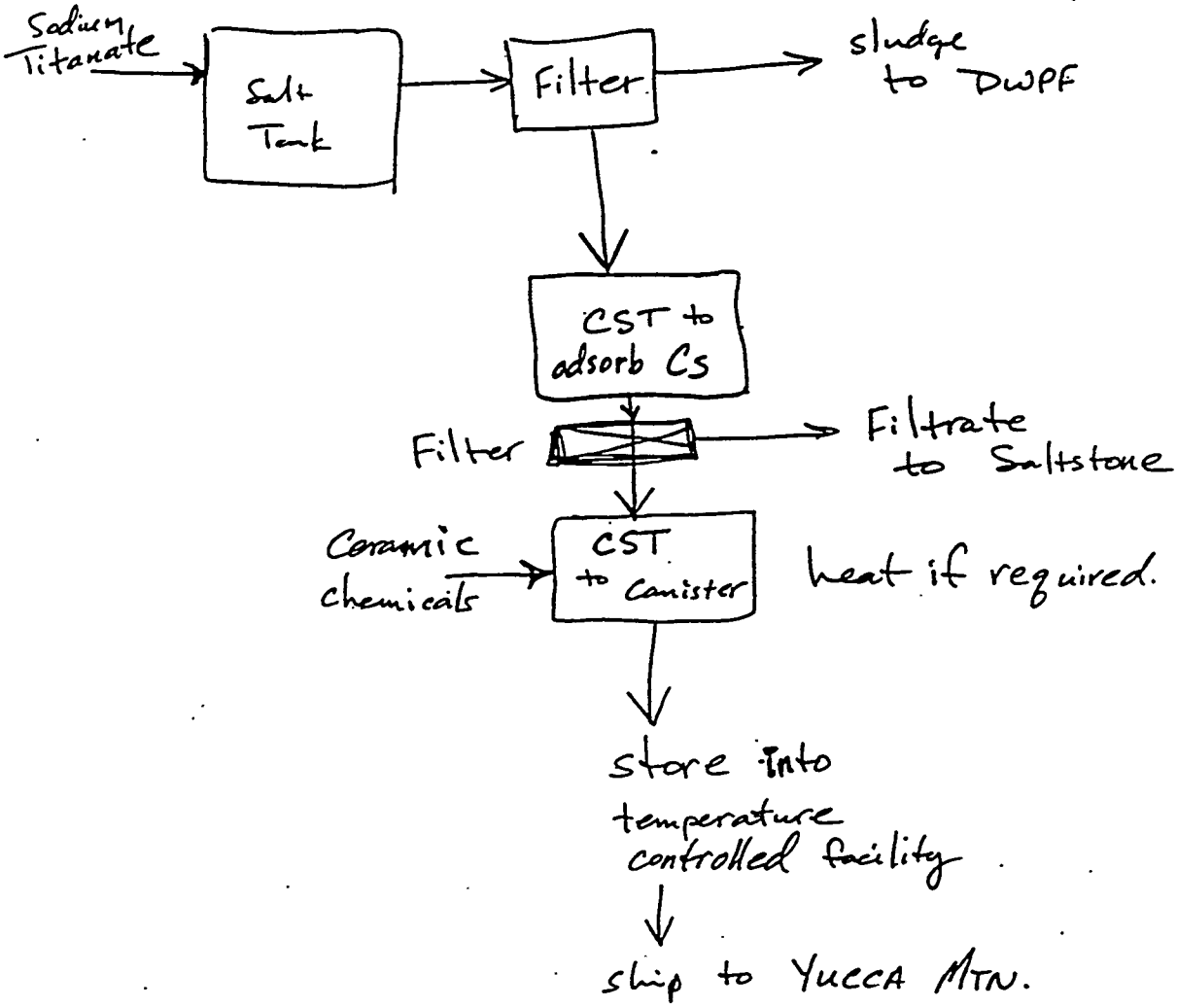

Alternative N° NX19 Originator Luis Nunez (ANL) via Charles Coutier

Title: In-Tank Separation with Crystalline Silicotitanates (CST) using the Magnetically Assisted Chemical Separation (MACS) Process

Description: The MACS concept promises simple, versatile, compact processing at very low costs. Both equipment and materials are inexpensive, and disposal cost for secondary wastes are minimized. The process can be tailored for many specific applications for which solvent extraction or ion exchange processes are already developed. The magnetic carrier particle are composed of magnetite, charcoal, polymer and the inorganic ion exchanger. The surface of the particles are treated to retain selective inorganic ion exchanger (e.g., sodium silicotitanate, CST). In-tank or near-tank separation of radionuclides (e.g. Cs) using the MACS process is a new approach to the critical problem of waste treatment at U. S. Department of Energy and Department of Defense sites. The MACS process can be used at any tank or location, including situations where remote operation is necessary. Unlike ion exchange MACS does not require preliminary filtration of the solution since it is not hindered by very fine particles or small concentration of organic complexant.

Technical Maturity: The chemistry of the MACS process has been proven in laboratory tests for other radionuclide systems (Am, Pu, U, Sr, Cs) and different extractants and ion exchange materials. Some laboratory work is required for the CST magnetic particle system. The process is not yet fully commerialized for nuclear applications.

Safety Issues: The major safety issue would be loss of particles under strong acid conditions. However, this is not the case for ITP. Radiation effect have been considered using a ^{60}Co source at ANL for previous manufactured particles containing inorganic ion exchangers. Radiation damage to these particles was found to be of minimal consequence.

Advantages:

Feature	Advantage
Extractant-coated microparticle	Borrows from the plethora of ion exchange chemistry and advantages of ion exchange-like support material. Allows for tailoring to specific needs.
Microparticle composition	Demonstrates increased recovery of target metals than solvent extraction or ion exchange by synergistic mechanism.
Small size of particles	Large surface area for reaction decreases the time to reach equilibrium.
Magnetic recovery	Allows for in situ or in tank treatment and efficient retrieval of particles. Translates to lower solvent losses, simple equipment design, and increased efficiency.
Small unit	Minimal space requirements.

Disadvantages: The process is limited to polishing stages; that is, concentrations in the weight percent would be to difficult to process and conventional techniques should be applied.

Process Diagram:

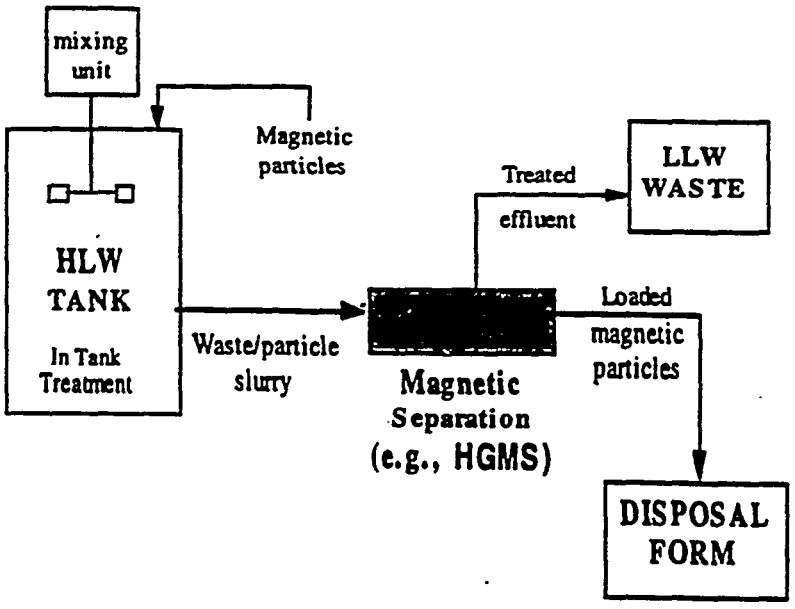

Key Initial Tests: The most important issue is to test the magnetic particles composite with the CST prepared by Cortex Biochem, Inc., to determine the extractability and loading of Cs onto the magnetic particles from ITP simulants and actual waste streams. At the same time the MACS system will be evaluated for large scale operations using an HGMS, this will provide a proof of principal necessary for in tank processing.

References:

- L. Nuñez, B. A. Buchholz, M. D. Kaminski, M. Ziemer, G. Dyrkacz, G. F. Vandegrift, K. J. Atkins, F. M. Bos, E. R. Elder, and C. A. Swift, *Development Program for Magnetically Assisted Chemical Separation: Evaluation of Cesium Removal from Hanford Tank Supernatant*, ANL-94/47, 1994.
- B. Bauer, R. D. Rogers, L. Nuñez, M. Ziemer, T. T. Pleune, and G. F. Vandegrift, *Review and Evaluation of Extractants for Strontium Removal Using Magnetically Assisted Chemical Separation*, ANL-95/26, 1995.
- L. Nuñez and G. F. Vandegrift, "Plutonium and Americium Separation Using Organophosphorus Extractant Absorbed onto Ferromagnetic-Particles," Separation of f-Elements, Eds., K. L. Nash and G. R. Choppin, Plenum Press, New York, 125-140, 1995.
- Buchholz, B. A., Nuñez, L., and Vandegrift, G. F., "Radiolysis and Hydrolysis of Magnetically Assisted Chemical Separation Particles," Separation Science and Technology, 31(14), 1933-1952, 1996.
- Kaminski, M., Landsberger, S., Nuñez, L., and Vandegrift, G. F., "Sorption Capacity of Ferromagnetic Microparticles Coated with CMPO," Separation Science and Technology, 32(1-4), 115-126, 1997.
- Nuñez, L., Buchholz, B. A., and Vandegrift, G. F., "Waste Remediation With In-Situ Magnetically Assisted Chemical Separation," Separation Science and Technology, 30(7-9), 1455-1471, 1995.

- Nuñez, L., et. al., "Actinide Separation of High-Level Waste With Solvent Extractants on Magnetic Microparticles," Separation Science and Technology, 31(10), 1393-1407, 1996.
- Buchholz, et al., "Optimizing the Coating Process of Organic Actinide Extractants on Magnetically Assisted Chemical Separation Microparticles," Separation and Purification Technology, 11, 211-219, 1997.

HLW SALT DISPOSITION PROCESS ALTERNATIVES

Alternative #: NX 20 Sponsor: Sam Fink

Title: Magnetic Separation using Cesium Specific Media

Description: Cesium isolated from solution by specific ion exchange or adsorptive media. (Examples of media used include iminodiacetate (IDA), acrylic, and NASA resins.) Media present on particles with magnetic core, using a proprietary manufacturing technology. Technology to make the particles exist with several vendors but SELENTEC, Inc. (Atlanta, GA) likely possesses the most extensive experience related to this application. Any of several media candidates for usage; only a few material currently developed at bench scale with fewer manufactured to data in larger-scale batches. Based on recent particle development and testing, SELENTEC personnel suggested that SRTC test current particles for the treatment of High Level Waste.

Reference: Technology Deployed at Limited Scale on Groundwater and Specialty Waste Applications (Most Notable: Radionuclide Removal from Contaminated Milk near Chernobyl)

Technical Maturity: Technical feasibility stage; laboratory testing of optimal materials.

Advantages:

Disadvantages: Extraction of particles by magnet does not remove sludge or titanate from waste. Particle manufacture not developed at required scale.

Safety Issues Inadequately defined: handling loaded particles poses rad concerns.

Key Initial Tests: Feasibility test with current particles from SELENTEC.

Process Diagram (Optional, see reverse side) Not provided.

HLW SALT DISPOSITION PROCESS ALTERNATIVES

Alternative #: NX21 Sponsor: BNFL Date: 3/27/98

Originator: Stewart Mackay Phone #: (509) 946-4006

Title: Actinide & Cs Separation Using Sodium Titanate (NaTi) and SuperLig 644

Description: Using the existing ITP facilities, actinides can be separated from the tank waste by addition of sodium titanate and ultrafiltration. Cesium can be separated from the supernate using SuperLig 644 resin. The cesium ion exchange column and associated vessels may be placed in one of the ultrafilter building cells, the benzene stripper bldg., or the New Waste Transfer Facility depending on radiation dose and desired equipment size.

Technical Maturity: Actinide separations using NaTi is part of current ITP process. Cesium separation using SuperLig 644 has been conducted by SRTC personnel at lab scale using radioactive Hanford waste samples.

Safety Issues: SuperLig 644 is eluted with 0.5 M nitric acid. Strong acid will cause rapid decomposition of the SuperLig 644 resin.

Advantages: BNFL's proposed approach for treating Hanford tank waste uses SuperLig 644 resin. BNFL is currently collaborating with SRTC in demonstrating Cs separation with SuperLig 644 and plans pilot scale tests with SRS waste. SRS can benefit from the BNFL testing currently being done by SRTC.

Disadvantages: Spent resin must be disposed of as solid waste or processed in CIF.

·antages: Spent resin must be disposed of as solid waste or processed in CIF.

Process Diagram (Optional)

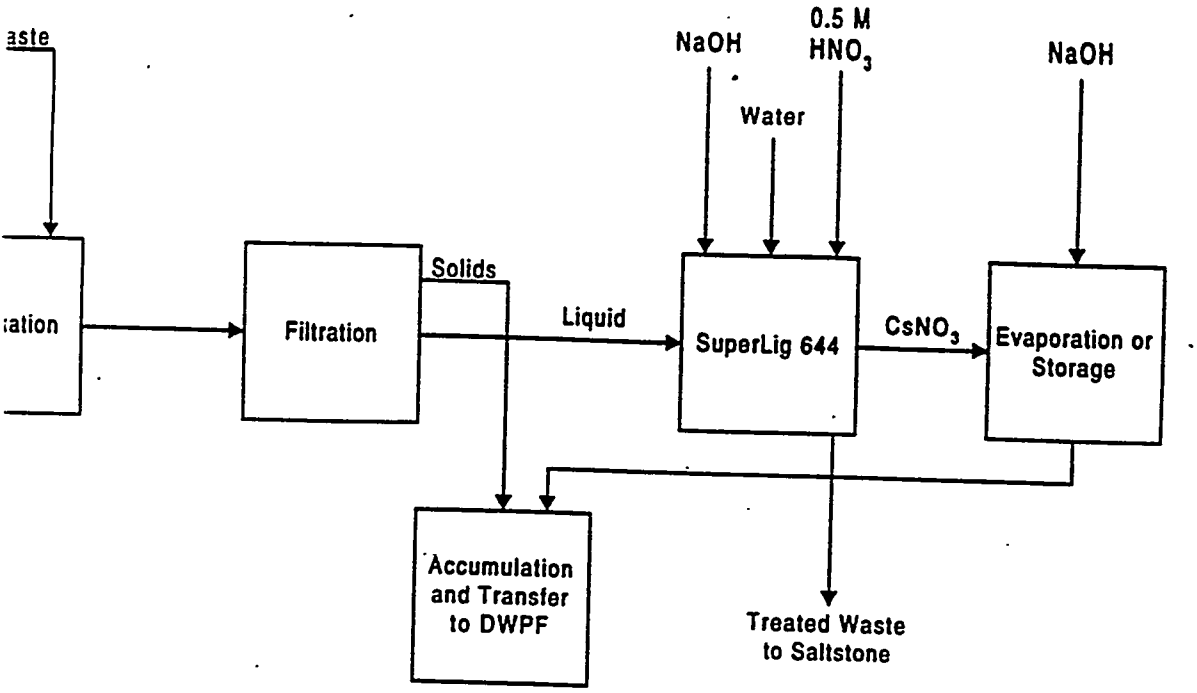

Nx 22

MAGNETIC PARTICLES REMOVE METALS AND RADIONUCLIDES
Pollution Engineering - November 1997

A technology that removes metals and radionuclides from waste or process streams may offer an alternative to traditional ion exchange columns and solvent extraction. Patented at Argonne National Laboratory, Magnetically Assisted Chemical Separation (MACS) uses small magnetic particles covered with an organic polymer to selectively attract specific metals.

The particles are poured into a tank containing a process or waste solution, and the organic polymer coating extracts the metals contained in the solution. The magnetic particles, along with the extracted metals, are removed from the solution with magnets. The metal is then stripped from the particles, allowing both the metal and the particles to be recovered and the process solution to be recycled to the plant.

MACS has been demonstrated at the bench-scale level for a wide variety of waste streams, and scale-up and pilot testing are planned. It is hoped the technology will be used commercially by electroplating and other industries that generate metals or hazardous materials they would like to remove or recycle at a reduced cost.

TONY LIUTKUS (SPONSOR)

INCLUDED IN NX 19

HLW SALT DISPOSITION PROCESS ALTERNATIVES

Alternative #: ~~[illegible]~~ POM 1 Sponsor: Date: 25 March 1998

Originator: Paul D. d'Entremont Phone #: 208-8727

Title: Supercharge Late Wash

Description: Increase the capacity of Late Wash so that it could handle the entire job of precipitating the salt and washing the precipitate before sending it to DWPF. Perform the precipitation fast enough so that degradation of the STPB is not a concern.

Some options for increasing the capacity of Late Wash might be: 1) Install a bigger filter; 2) replace the existing filter with a coarser one, sacrificing some DF, 3) increase the pressure of the filtration and wash the filters often.

Technical Maturity: High. Basically, this is just the ITP and Late Wash process purposely run fast.

Safety Issues: All the current safety issues for operating Late Wash would apply to this process, but no new issues are introduced.

Advantages: Known technology. From a technical perspective, this is simple to implement.

Disadvantages: May be high capital to increase the size of equipment at Late Wash. Also, there are probably coupling and cycle time issues; may require some new nitrogen-inerted stainless steel tanks.

HLW SALT DISPOSITION PROCESS ALTERNATIVES

Alternative #: ~~[illegible]~~ P0M2 Sponsor: Date: 25 March 1998

Originator: Paul D. d'Entremont Phone #:208-8727

Title: Flocculate the feed to ITP

Description: Add a flocculent to the ITP feed tank. The flocculent would cause the particles, which contain most of the palladium catalyst of concern, to precipitate. This would reduce the rate of degradation of the STPP in ITP, perhaps making the process viable.

Technical Maturity: Flocculents are well-developed technology, but I'm not aware of any work showing how much palladium could be removed by flocculation. Would probably need some bench scale testing with real waste.

Safety Issues: None beyond the current safety issues already identified at ITP.

Advantages: Preserves most of the current ITP plans. Low impact to the HLW flowsheet.

Disadvantages: Flocculation would leave soluble palladium still in solution. Would need to address if flocculation alone could reduce the degradation rate of STPB significantly enough to be attractive. It might be necessary to combine this idea with another process for removing soluble palladium.

HLW SALT DISPOSITION PROCESS ALTERNATIVES

#3/#18/#45 at 3/24/98 Meeting

Alternative #: ~~[illegible]~~ POM3 Sponsor: R.F. Bradley Date: 3/25/98

Originator: R.F. Bradley Phone #: 2-9879

Title: Modify Vapor Space Explosion Control To Eliminate Benzene Producing Metal Catalysts

Description: Use single parameter control to eliminate Benzene/H_2 explosion. The parameter would be the fuel concentration. Keep concentration below explosive limit with air dilution. Make the air dilution system highly reliable by applying defense in depth to the air dilution function. The oxidative environment should convert metals to oxides and poison them as benzene producing catalysts.

Technical Maturity: This is how we prevent explosion of hydrogen in the existing high level waste tanks. Catalyst poisoning (metal oxidation) Kinetic data would be needed.

Safety Issues: There will still be flammable gases in the vapor space from radiolysis.

Advantages: Allows us to use the existing process for Cs removal and the existing methods of avoiding vapor phase deflagration.

Disadvantages: Still adds an organic material to high level waste.

HLW SALT DISPOSITION PROCESS ALTERNATIVES

Alternative #: POM 4 Sponsor: _____ Date: 3/24/98

Originator: Gary M Johnson Phone #: 88026

Title: Vapor Space Mixing / Benzene Emissions Reduction *

Description: Provide a skid mounted off gas treatment system consisting of a chiller (to remove benzene from tank vapor space as a liquid that could be burned @ RTF), reheater, HEPA's and a compressor / exhauster to recycle the Nitrogen rich stream that has been stripped of most benzene, back into tank vapor space thru a series of diffusers (pipes with holes) that extend thru the vapor space into the liquid. Gas should preferentially exit in vapor space rather than thru holes below liquid level, thus avoiding foaming. Also add chiller to chromate water to reduce liquid temp.

Technical Maturity: Compressor Exhauster / Package Chiller are all existing commercial technology. Mixing of vapor space with sparger is mature technology.

Safety Issues: Provides mixed vapor space from liquid surface to top of tank. Will give more representative vapor space sample for Nitrogen control. Also reduces benzene released to atmosphere.

Advantages: Utilizes existing facilities by using current ventilation system as backup. Minor construction interference. (Additional inlets for sparger pipes may be cored drilled thru tank top.) Chiller allows benzene to be collected and burned @ RTF rather than released to atmosphere. Ventilation unit can be fabricated offsite and placed as unit after testing.

Disadvantages: _____

* Also consider use of tank 42H as feed prep tank to capture / precipitate catalytic agent which could be settled in 42 or filtered as transferred to 48. Precipitate could be allowed to accummulate in 42H and then slurried

Process Diagram (Optional)

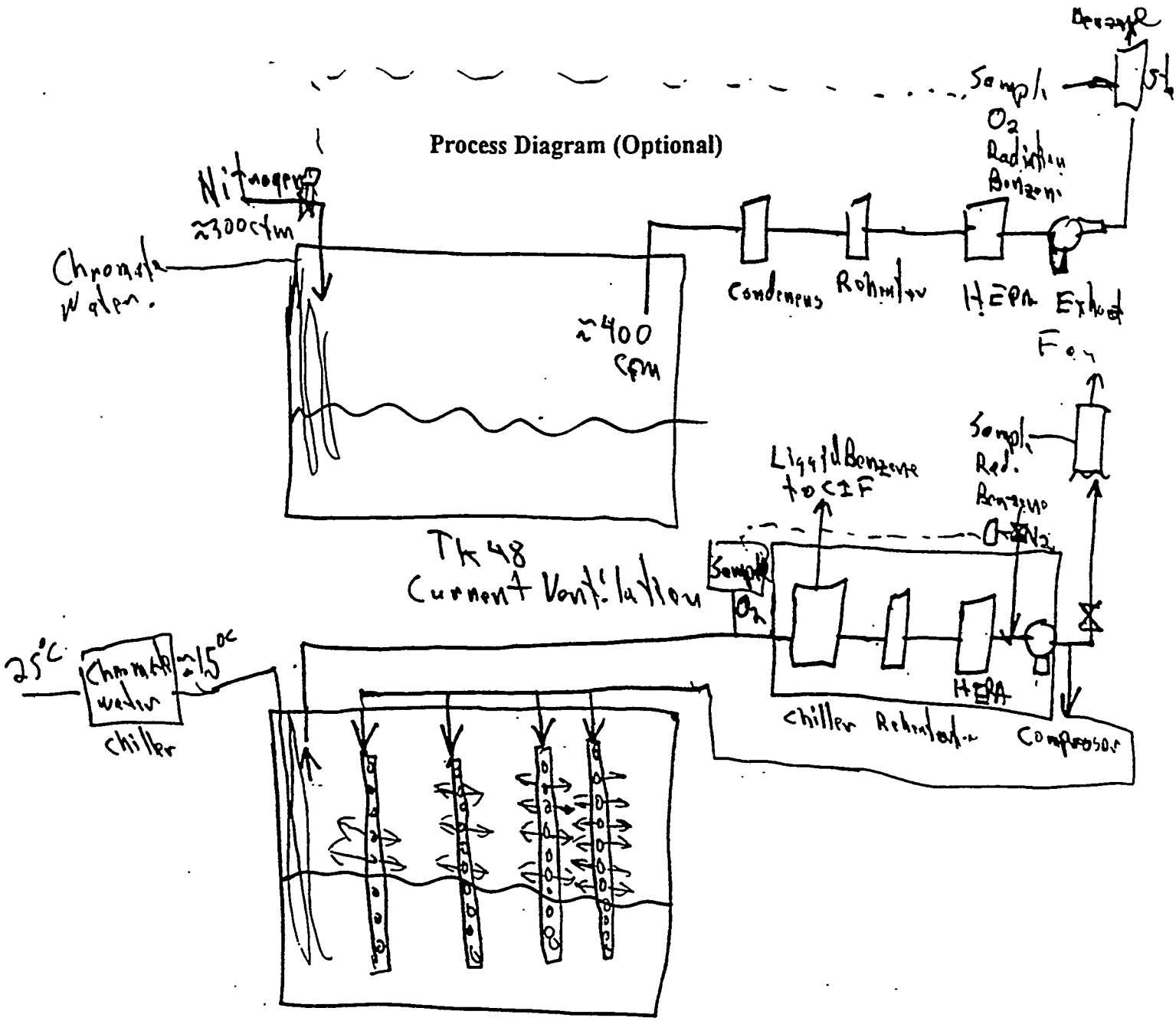

Proposed Additional Ventilation
(Current System Remains as back up.)

HLW SALT DISPOSITION PROCESS ALTERNATIVES

Alternative #: POMS **Sponsor:** [illegible] **Date:** [illegible]

Title: Stop precipitate degradation by poisoning palladium catalyst.

Description: Currently, benzene is produced by palladium catalyzed degradation of tetraphenyl borate precipitates. This process would reduce this degradation by poisoning the catalyst. Possible poisons include sulfides but others could come from the petrochemical literature.

Technical Maturity: Unknown. A minor change from the existing process but requires finding a catalyst poison.

Safety Issues: None.

Advantages: An easy step beyond the current process.

Disadvantages: Must find the poison.

HLWALTFM:PIH/Rev 1
3/11/98

HLW SALT DISPOSITION PROCESS ALTERNATIVES

Alternative #: PoM6 ~~[illegible]~~ Sponsor: R.A. Peterson (TANOSACTS)

Title: Selective Precipitation of Cesium via Tetraphenylborate

Description: This is a process for the selective precipitation of cesium in the presence of potassium and sodium ions for the treatment of high level radioactive wastes. The rate of precipitation of soluble cesium and potassium ions is dependent on the concentration of these ions in solution, the concentration of tetraphenylborate ion in solution and the rate constants for the precipitation and dissolution reactions. Recent experimental results indicate that Cesium precipitates at least five times faster than Potassium. Using this ratio of rate constants, and knowledge of the Ksp for each species; it is possible to estimate the degree to which preferential cesium precipitation will occur. One can define this preference using a precipitation ratio. For PR > 1, cesium is precipitated preferentially to potassium. By controlling the concentration of the tetraphenylborate ion, one can extend the time period over which the higher precipitation ratio is obtained. The proposed process will employ these lower concentration to maximize the benefit of obtaining these higher precipitation ratios.

Process Description: Figure 2 contains a schematic diagram of the proposed process. Salt solution and tetraphenylborate solution will be introduced into the mixing apparatus at controlled rates. By accurately controlling these rates and by employing a mixing apparatus that provide intimate mixing of the introduced fluid with the bulk resident material, the kinetics of precipitation will be controlled to provide the maximum precipitation ratio. Material will be continuous removed from the mixing apparatus and transferred to a separation process. The separation process will concentrate the insoluble CsTPB and KTPB and produce a salt solution depleted in soluble cesium ion.

The proposed process can employ any mixing apparatus or separation process. In particular, the mixing can be achieved using a vortex mixer to provide intimate mixing. Employing a vortex mixer would probably involve a recirculation loop with a working precipitated salt solution with a bleed for the feed to the separation process.
Similarly, the separation process could be achieved using cross flow filtration employing porous stainless steel filtration elements. Such elements have previously been shown to efficiently concentrate the precipitated [Cs/K,TPB] solids.
The proposed process could provide at least a five fold decrease in the quantity of tetraphenylborate required to achieved the desired concentration of Cs in high level radioactive waste.

Reference: Invention disclosure by R. Peterson
Technical Maturity: Conceptual Idea
Advantages: Opportunity to significantly reduce quantity of tetraphenylborate required and to eliminate significant safety concerns.
Disadvantages: Not well developed and would require changes to the salt cell.
Safety Issues Limited new safety concerns
Key Initial Tests: Precipitation kinetics tests

Figure 2. Process Schematic

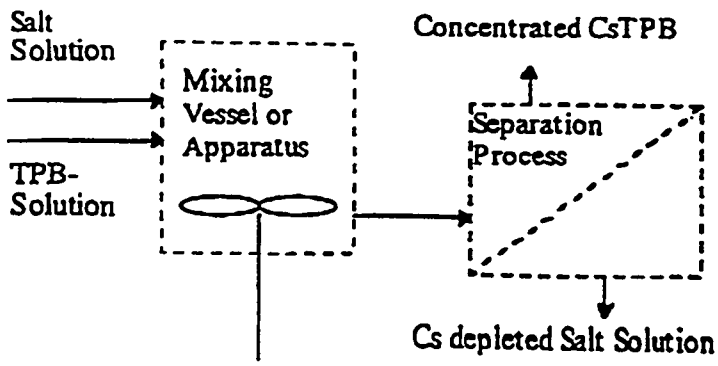

HLW SALT DISPOSITION PROCESS ALTERNATIVES

Alternative #: 4 POM 7 **Sponsor:** Lee Dworjanyn

Title: **Optimized ITP Process, Pre-filtered Solution, Low TPB Excess, Reduced Temperature, Short Cycle**

Description: Existing In-Tank Precipitation process, optimized based on current TPB decomposition and benzene generation chemistry:

1. Pre-filtered salt solution.
2. Low NaTPB excess, followed by re-addition to maintain DF.
3. Reduced tank temperature.
4. Short precipitation cycle.
5. Revised tank safety calculations.

Reference: Current technology.

Technical Maturity: Demonstrated in Tank-48H.

Advantages:

- Minimal development utilizing acquired know-how.
- Demonstrated DF
- Quality SaltStone

Disadvantages:

- Benzene safety concerns.
- Filtration, cooling water costs.

Safety Issues:

- Benzene, hydrogen in vapor space.

Key Technical Tests:

- In-tank demonstartion.

Process Diagram:
(Optional)

HLW SALT DISPOSITION PROCESS ALTERNATIVES

Alternative #: POM 8 **Sponsor:** Yonosuitis

Title: TPB T-48 Safety Reinforcement

Description: Add increased ventilation and N2 flow to T-48 and T-49. Overpower T-48 and T-49 benzene issues with engineered safety features.

Reference: Conceptual

Technical Maturity:

Advantages: None

Disadvantages: Need pretreatment process. Cost. Solid stability especially in late wash and T-49 storage.

Safety Issues: None if overpowered and can address air base operation.

Key Initial Tests: Engineering calcs needed. Solid stability tests needed especially related to T-48 and late wash.

Process Diagram (Optional, see reverse side):

HLW SALT DISPOSITION PROCESS ALTERNATIVES

Alternative #: ~~[illegible]~~ P0M9 **Sponsor:** Zamorskis

Title: Catalyst Removal - Temperature Controlled Tetraphenylborate Processing

Description: Insoluble sludge containing potential catalyst would be removed using a sandfilter followed by removal of soluble catalytic metals with a sulfide bed. Cs precipitation would occur in Tank 48H with installed cooling capability.

Reference: Current research - bench scale.

Technical Maturity: R&D or excess TPB - Decomposition indicates no appreciable decomposition at temperatures below 30º.

Advantages: Utilizes predominately available equipment.

Disadvantages: Must install filtration and refrigeration equipment. There is uncertainty about precipitation kinetics at <30º.

Safety Issues: Current safety basis in maintained.

Key Initial Tests: Effectiveness of sulfide bed (column).

Process Diagram (Optional, see reverse side):

HLW SALT DISPOSITION PROCESS ALTERNATIVES

Alternative #: ~~[illegible]~~ POM 10 **Sponsor:** Zamorailis

Title: Catalyst Removal - Temperature Controlled Inhibitor Added TPB Processing

Description: In addition to catalyst (soluble and insoluble) removal and temperature controlled, this flowsheet would add an inhibiting agent (sodium bismenthate or dimethylglyoxime).

Reference: Current research - bench scale.

Technical Maturity: Initial R&D testing of inhibitors has shown reduction in TPB decomposition rates of factor of 6.

Advantages: Almost complete prevention of decomposition. Inhibitor provides insurance if temperature control is lost.

Disadvantages: Down stream processing effects of inhibitor must be proven.

Safety Issues: More research needed to prove safety of chemical agent in adverse conditions.

Key Initial Tests: Acid hydrolysis of TPB in the presence of chemical agent.

Process Diagram (Optional, see reverse side):

OPTIONAL FORM 99 (7-90)

FAX TRANSMITTAL # of pages ▶ 4

To Peter Hudson	From Mike Williams
Dept./Agency	Phone # 8-1339
Fax # 7-6526	Fax # 8-0321

NSN 7540-01-317-7368 5099-101 GENERAL SERVICES ADMINISTRATION

HLW SALT DISPOSITION P

POM 11

Alternative #: ~~[illegible]~~ **Sponsor:** Michael Williams **Date:** 3/23/98

Originator: Michael Williams **Phone #:** 8-1339

Title: ITP Small Batch Rapid Processing to DWPF with auxiliary tank cooling and improved process monitoring

Description: The key to success in the ITP process is to limit ESP & TPB additions to those previously authorized in AP (38, 39, 39A) with small batch processing and to cool the ITP tanks to 12°C (with PR limit 10°C) with auxiliary cooling for CCW in ITP/ESP tanks. This extra cooling will allow pump runs without accelerating catalytic reactions and permit washing in Tank 48 reducing nitrites to .65 M (and nitrate to .1 M) after feeding Tank 49 and then directly to DWPF without using Late Wash. Uncertainty in instruments monitoring the process can be reduced to ±1% for GC and GC Mass Specs monitoring vapor and Liquid Chromatographic monitoring the process with Gel columns.

Technical Maturity: Process proven at elevated temperatures +25 to 50°C effect of lower temperatures ie 12°C not evaluated. Auxiliary cooling demonstrated in commercial nuclear. Improved process monitoring with GCs, GC mass specs and Liquid chromatography previously demonstrated in nuclear and industrial applications.

Safety Issues: Benzene generation is reduced at lower temperatures and minimized by rapid processing within 60 days to DWPF. Impact of long term tank operations at 12°C need addressed and loss of cooling capability evaluated. Effect of washing precipitate with well water and having minimal inhibitors needs to be evaluated.

Advantages: Existing ITP facility used except Late Wash (not designed for BF). Modifications limited to auxiliary cooling system and process monitoring equipment additions ie low cost. Process is simple to operate as uses existing process and minimal new equipment. Washing and concentrating done with same filter ie proven flow path. ② ③

Disadvantages: The primary disadvantage to the process is that Nitrates will not be washed out as well as at late wash ~~[illegible]~~. This can be compensated by operating ESP tanks at lower temperature and requiring less inhibitors for sludge. Thus, the net result may be the same total calcine but apportioned differently between ITP precipitate and ESP sludge. ie acceptable for DWPF glass.

① Lower temperatures should reduce benzene generation and increase rate of lower temperatures besides less inhibitors is kinetics of reactions. ② Extra advantage of running tanks at lower temperatures from ITP/ESP before nitrate decomposition. ③ Reduces time without washing in small batches to hold for CCW to lower. Tank temperatures to hold for CCW to lower. ~~[illegible]~~ time

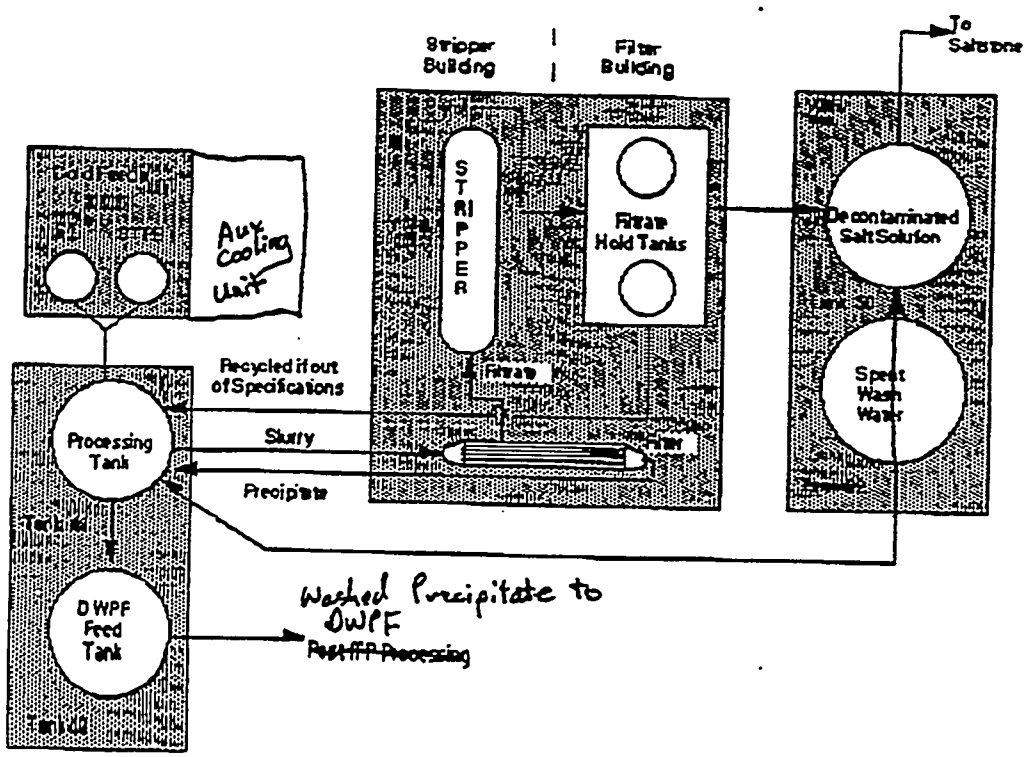

Figure 2.2 In-Tank Precipitation Flowsheet
(Schematic Layout)

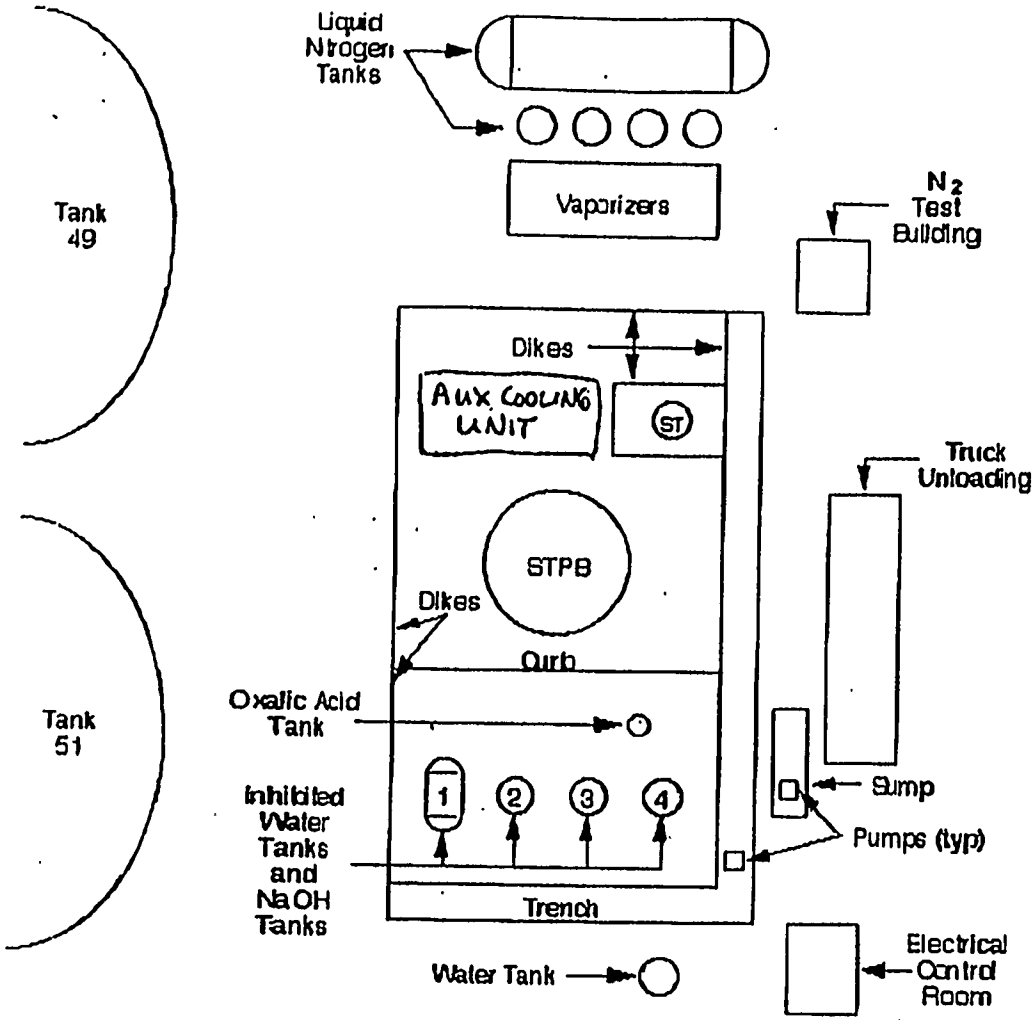

Figure 2.8 Cold Feeds Area

TABLE 2.6 New Equipment on Waste Tanks

Tanks	Equipment/Function
40, 42	Steam spargers Four slurry pumps on each - variable speed Two transfer pumps on each - variable speed
48, 49	Redundant nitrogen purge piping and controls Oxygen analyzer on exhaust Composite LFL Benzene analyzer on exhaust Tank pressure (vacuum) control system Isokinetic sampler on exhaust/activity monitoring Inlet HEPA reversed/outlet of new pressure relief valve Maximum ventilation flow increased to 1000 cfm Slurry pumps - variable speed Transfer pump - fixed speed Filter feed pumps - variable speed (Tank 48 only) Modified offgas condensers Increased Tank 48 stack height to 80 feet Increased Tank 49 stack height to 70 feet
50	Composite LFL gas monitor on exhaust Slurry pumps - variable speed Transfer pump - variable speed
51	Slurry pumps - variable speed Transfer pumps - variable speed

PS Auxiliary Cooling system capable of cooling Tanks 48 and 49 to 12°C (53.6°F) as well as cooling ESP Tanks (40 & 51)

GC Mass Spec with sample lines to Tanks 48, 49 and 50 to analyze for Bz and Organic spectrum in vapor space with monitoring alarm in Control Room if higher than expected rates.

GC molecular Sieve for Tanks to monitor for H_2, O_2, N_2 with monitoring alarm in Control Room if higher than expected rates.

Liquid Chromatograph to monitor liquid in Tank 48 with monitor alarm in Control Room if higher than expected rates.

OPTIONAL FORM 99 (7-90)

FAX TRANSMITTAL # of pages ▶ 4

To: W CARLSON	From: SRIKANT MEHTA
Dept./Agency	Phone # 8-8398
Fax # 8-1212	Fax # 8-8091

NSN 7540-01-317-7368 5099-101 GENERAL SERVICES ADMINISTRATION

N PROCESS ALTERNATIVES

Form 12

Alternative #: ~~[illegible]~~ **Sponsor:** John Carlson **Date:** March 24, 1998

Originator: Srikant Mehta **Phone #:** 208-8398

Title: Air injection based benzene deflagration prevention system for the In-Tank Precipitation process

Description:

This proposal recommends changing from a nitrogen based inerting system for ITP Tanks 48, 49 and 50 to an air based benzene deflagration prevention system. Specifically, the proposed design would allow prevention of benzene stratification and accumulation to deflagration conditions by ensuring that there is no stratification in the tanks using mixing/diluting air blown in (injection) through telescoping deployable air lances with air nozzles directing the air-jets across the liquid surface and preventing a benzene stratification layer/zone. Injection air would be provided by air compressors (fresh air and/or partial recirculation of ventilation system exhaust).

The proposed switch to an air based benzene deflagration prevention system consisting of a low pressure, variable flow compressed/forced air system that injects air into the tanks using deployable telescoping air lances would significantly improve benzene concentration control and simplify operations. The primary benefits are:

1. Benzene stratification and concentration related problems will be eliminated due to agitation and dilution provided by the air jets.
2. The system can be designed to vary the air injection rate based on predicted or anticipated benzene evolution rate. Consequently the system would be capable of handling a variable benzene generation rate that can be significantly higher than the current nitrogen based system can handle.
3. The air based system dilutes the benzene and forces it out of the tank through the existing ventilation system. The resulting emissions of diluted benzene do not have any asphyxiation, explosion and fire hazards associated with them.
4. The air based system can be designed to operate at low pressures to minimize contamination and limit risk of tank overpressurization.

5. Existing/excess equipment available on site can be used to fabricate this system.
6. Transition to the proposed air based system would also cause the ITP process to be in line with the process as originally tested/developed.
7. The proposed system can also include benzene abatement measures/systems on the existing ventilation exhaust system using liquid nitrogen systems for condensing contained benzene if needed.

Technical Maturity:

The proposed alternative meets/solves identified problems due to benzene generation and stratification in the ITP Tanks with no adverse risks. The system would prevent benzene stratification and evolution rate related accidents. The alternate method would also allow processing of higher activity feed materials.

Existing fabrication facilities/skills at the site, air compressors/air fans on the site (e.g. from reactors or excess facilities) can be used in the fabrication of this system. Alternate sources such as would be available from upgrades to plant air system could also provide the requisite air.

Portable air compressors/fan blowers could also be staged in seismic/tornado qualified structures as backup for emergencies.

Air compressors/blowers/fans are relatively cheap and off the shelf items readily amenable to commercial grade dedication. Cost and availability also allow exploration of options for building in sufficient redundancy and reliability without necessarily upgrading each component to safety class. The telescoping air lances can be patterned after existing telescoping steam transfer jets with nozzles designed for blowing air at or across the liquid surface to prevent stratification and provide mixing and dilution of the evolving benzene. The air based system as envisioned would be very easy to design to meet any requirements for a safety class system.

The envisioned design would allow insertion of the air lances through existing observation ports and would require no modification to the Tank. Modifications to the tank top would be limited to rigs required to hold the lances in place and supports or trays for the air supply lines.

Functional performance requirements would include:

- Ability to prevent benzene stratification to CLFL by providing mixing at the liquid/vapor interface
- Variable air blow capacity to dilute any anticipated benzene evolution rate to less than CLFL
- System should not result in pressurization of the tank
- Potential for spread of contamination due to agitation/mixing in the air space should be within acceptable limits
- Seismically qualified or have sufficient redundancy/reliability
- Structural materials used for telescoping air lances should be amenable to easy disposal or decontamination for reuse

Safety Issues:

Potential areas for concern are: Benzene concentration for worker protection, local contamination control upon loss of exhaust ventilation, and potential for waste tank overpressurization. All of these areas of concern can be addressed as part of the design.

Advantages:

The proposed approach mitigates the hurdles associated with benzene generation rate and stratification associated with the ITP process. It maximizes utilization of the existing process and systems to accomplish this. The required design development and facility modifications can be accomplished within one year. This approach has minimal long term operating costs and duration to restart of salt processing.

Disadvantages:

None identified at this time.

PROCESS DIAGRAM.

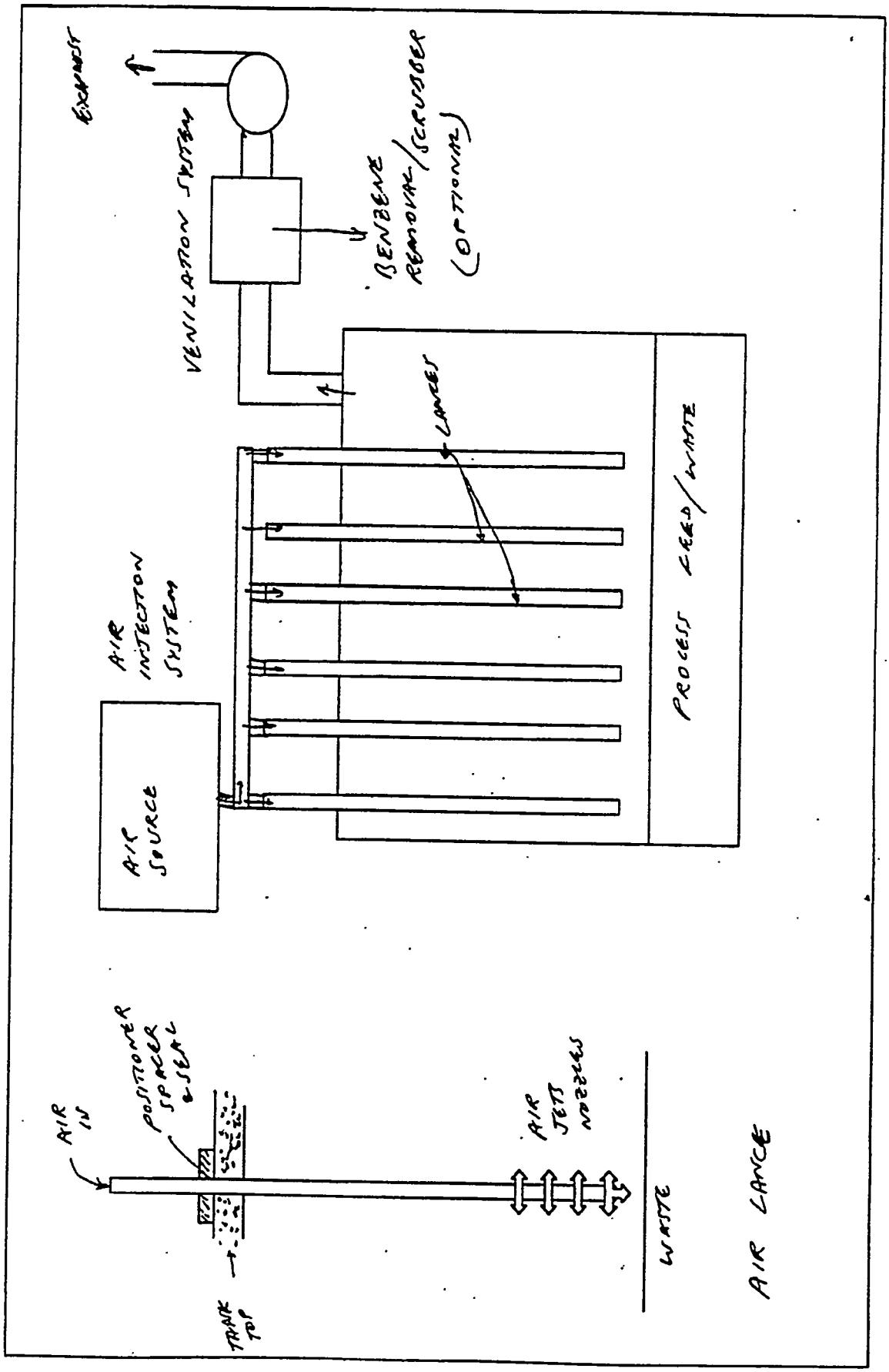

Author: Jerome Morin at SRCCA05
Date: 3/23/98 4:56 PM
Priority: Normal
Peter Hudson at SRCCC03
ject: ITP answer

Peter:
I hesitate to pass this on, but in the interest of developing an inclusive list...have at it. It appears that this suggestor misunderstood our objective and is trying to separate Cs from CsTPB. This may have application down the road if ever we need to recover Cs from the precipitate formed in Tank 48.
Jerry

Subject: ITP answer
From: ponder@chem.psu.edu at Mailhub
Date: 3/22/98 8:14 PM

POM13

Dear Jerry,

It was a pleasure to meet you this past week at the DOE-CP workshop. I have been checking out a couple of ideas since I got back, and I think I've got something for you on the ITP.

I can separate the cesium from the tetraphenylborate ion (TPB). My current recovery for cesium from dry CsTPB is 89%. The cesium is recovered as CsCl, and the unrecovered Cs would be returned to the ITP stream. All the other reagents are recycled. I should be able to return the TPB to the ITP stream, but I still need to toy with the solution a bit--worst case, it will need a distillation, but I'm trying to use a simple decantation.

With the TPB separated intact from the Cs, there should be no benzene problem and you could recouple the streams. The CsCl should mix well with the sludge. Currently, the process would generate about 10 mL of aqueous caustic to the ITP stream for each gram of CsTPB removed, but I think I can improve this by 20% or more. Also, the chemistry is fairly simple, with readily available reagents. If it weren't for the regulatory paperwork, you could probably get it on-line in a week.

As far as the footprint is concerned, you would need a volume of about 1 dm3 for each 10 grams of CsTPB coming out of the ITP, with another volume of like size for transfer/separation. The entire separation/filtration/recycle process can be done very quickly (assuming no distillation), and I am thinking that the steady-state process could fit in an average closet (plus the necessary shielding, of course).

Penn State is applying for a patent on this process, so if you're interested, let me know and I will have the Intellectual Property Office send you their standard confidential disclosure form. If I understood the situation correctly as you outlined it at the workshop, I believe this process fully answers your problem.

Best regards,

Sherman M. Ponder

(814)863-9791

152 Davey Lab
Dept. of Chemistry
University Park, PA 16802

HLW SALT DISPOSITION PROCESS ALTERNATIVES

Alternative #: ~~[illegible]~~ POM 14 **Sponsor:** Robert CHANG (8-8105) **Date:** 3-20-98

Title: Use "Lateral Facility" to replace "ITP"

Description: Abandon Tank 48H. Use Lateral Facility as the ITP replacement. Send a diluted salt solution from Salt Storage Tank (salt cake dissolved supernate) to the Precipitate Tank inside Lateral. Add sodium titanate (NaT) and following NaTPB in precipitate Tank to separate radionuclides. The former agent is added to absorb Sr and Pu, the latter is to precipitate Cs and K. The tank contents are agitated and then concentrated thru the cross filter in the Filter cell. Use the 6450 gal precipitate tank as a day tank. There is no need to add corrosion inhibitor - sodium nitrite. Nitrite is a culprit for fouling up Precipitate Hydrolysis Reactor Process. A new ~~[illegible]~~ vapor condenser can be added if needed, at pros of Lateral Facility to reduce benzene emission [Although I believe this is not necessary].

Technical Maturity: Very few, if any, development works are required. This is a very mature process. Salt storage process is proven. ITP cross filter process is proven. Salt Process Cell ~~[illegible]~~ process has been demonstrated in TNX. No "new technology".

Safety Issues: Do not anticipate benzene generation will be a big problem if the "fresh" waste stream is precipitated and processed daily inside the Lateral Facility. The main reason why the benzene generation in ITP is so high and unpredictable is that the CsTPB has been precipitated for many years and in such a huge tank (1,000,000 gal). The decomposed benzene is trapped inside precipitates and released when tank agitator is turned on.

Advantages: The major advantages of this proposed Alternative are all the supporting facilities e.g. Salt process cell in DWPF, Salt storage, Lateral Facility, and CIF, are in place already. ~~[illegible]~~ Very cost effective and very few ~~[illegible]~~ technical uncertainties and ~~[illegible]~~ risks.

Disadvantages: Require new piping system to transfer fresh supernate solution (~~[illegible]~~ or re-dissolved salt) to Lateral Facility. A new benzene vapor condenser may be required. This ~~[illegible]~~ Alternative will generate benzene waste which will require to be disposed of in CIF. Need to dispose ~~[illegible]~~ the existing ITP waste sooner or later. (waste in Tank 48H will be a problem).

HLWALTFM:PIH/Rev 1
3/11/98

OPTIONAL FORM 99 (7-90)

FAX TRANSMITTAL # of pages ▶ 1

To Pete Hudson	From Bob Chang
Dept./Agency	Phone # 8-8105
Fax # 7-6526	Fax # 8-3033

NSN 7540-01-317-7368 5099-101 GENERAL SERVICES ADMINISTRATION

Author: Gary Abell at SRCCB05
Date: 3/5/98 4:44 PM
Priority: Normal
Peter Hudson at SRCCC03
ject: Re: ITP alternatives

Pete.....why don't you start a file. It's starting to rain.

thanks, Gary

Forward Header

Subject: Re: ITP alternatives
Author: Nader Elraheb at SRCCH06
Date: 3/5/98 4:01 PM

PM 15

Gary,

I am sure that this was thought off already. Just in case, there were thoughts of "just-in-time" process. I understand that benzene is not an issue, considering the nitrogen inerting that is in place. The issue is with the decontamination factor, df. The cesium detaches from the TPB in three to six months. So the three to four batch process (if I recall that was a one year cycle) should be shortened to a smaller one batch, and the wash cycle also should be shortened. The entire process should happen in days, or two to three weeks at most, and then transferred to DWPF. I believe Late Wash is capable of washing, so that Late Wash can do what ITP should be doing today. At Late Wash, the process tank is smaller, stainless steel and inerted(?)

The wash water can then be recycled back to Tank 48 a couple of times for filtration and the just-in-time batch can be delivered to DWPF. The wash water will have higher contaminants then Saltstone is designed for. Space availability can be a problem, but I am sure there are way around this. Also, if the wash water has a high content of salt or contaminants, in another tank more filtration and neutralization can be accomplished.

At DWPF, if processing (washing) again is necessary, then the just-in-time batch may have to be processed at DWPF rather then Late Wash. Wash water from DWPF again can be recycled to Tank 48 or Late Wash, for additional filtration, depending which tank will be the process tank.

The concept is the cycle from initial processing and filtration, up to pumping into melter (or when DWPF ceases processing the waste), should be minimized as much as possible. The precipitate can't be stored in between the process cycle, even at DWPF. And wash water should be recycled in every way possible to minimize in the excess waste, as we may be utilizing much more wash water.

You may want to talk to James Brook who had left HLW back about one year ago. He had some other pretty good ideas.

Nader

Reply Separator

Subject: ITP alternatives

HLW SALT DISPOSITION PROCESS ALTERNATIVES

Alternative #: P0M16 **Sponsor:** Gary Abell **Date:** 3/6/98

Title: Secondary Confinement

Description: The concern with benzene is a release of tank contents through risers in the event of an in tank fire. This alternative approach would require a secondary confinement be built over and around the ITP tank top to mitigate environmental releases.

Technical Maturity: Low tech; high maturity
Building confinements is well understood & implemented.

Safety Issues: Would mitigate current accident scenarios due to benzene.

Advantages: Life cycle cost should be competitive to developing brand new technologies.

Disadvantages: None thought of

No Sketch

EXPLANATORY NOTES FOR "ALTERNATIVES PRO-FORMA"

Alternative # will be provided by Peter Hudson.

Sponsor could be originator, a suitable "champion" or a core team member.

Date - Date submitted.

Title should capture the key unit operations of the proposed process.

Description should be a single paragraph technical description of the steps involved in the proposed process, clearly identifying where use is made of existing HLW processes/facilities.

Technical Maturity - one of the key criteria in ranking alternative processes. Define the current development status of the process, e.g. theoretical idea; chemistry proven in lab; fully commercialized for non-nuclear applications; full nuclear operation.

Safety Issues - another key criterion. Recognizing that benzene generation became a major safety issue on ITP, what significant safety issues would have to be tackled on this process? e.g. hazardous chemicals, risk of explosion, high temp and pressure.

Advantages and Disadvantages - apart from safety and technical maturity, what are the other principal advantages and disadvantages of the proposed process, e.g. simplicity, cost, operability, use of existing facilities.

Process Diagram (Optional) - If you can, sketch out the principal steps of the process, showing interaction with existing facilities, on the back of the sheet.

Completed Forms should be returned to Peter Hudson, either by e-mail or hard copy to 705-3C. OR FAX ~~726~~ 7-6526

HLW SALT DISPOSITION PROCESS ALTERNATIVES

Alternative #: POM17 **Sponsor:** Gary Abell **Date:** 3/16/98

Title: Keep Same process and buy/purchase additional Benzene permitting units to release to atmosphere

Description:
One limiting factor to the Existing ITP process is the amount of benzene that SRS is permitted to release to the environment on a yearly basis.

It may be possible to purchase additional ~~two~~ units from other States or Commercial entities in order to relieve this restriction on SRS

Technical Maturity: Not a technical solution. This Approach is a permitting/legal solution with no proposed change to the Existing ITP Facility

Safety Issues: None

Advantages: Requires no technical changes and may have lowest life cycle cost

Disadvantages: There is no guarantee that additional "benzene release units" can be obtained

No Sketch

EXPLANATORY NOTES FOR "ALTERNATIVES PRO-FORMA"

Alternative # will be provided by Peter Hudson.

Sponsor could be originator, a suitable "champion" or a core team member.

Date - Date submitted.

Title should capture the key unit operations of the proposed process.

Description should be a single paragraph technical description of the steps involved in the proposed process, clearly identifying where use is made of existing HLW processes/facilities.

Technical Maturity - one of the key criteria in ranking alternative processes. Define the current development status of the process, e.g. theoretical idea; chemistry proven in lab; fully commercialized for non-nuclear applications; full nuclear operation.

Safety Issues - another key criterion. Recognizing that benzene generation became a major safety issue on ITP, what significant safety issues would have to be tackled on this process? e.g. hazardous chemicals, risk of explosion, high temp and pressure.

Advantages and Disadvantages - apart from safety and technical maturity, what are the other principal advantages and disadvantages of the proposed process, e.g. simplicity, cost, operability, use of existing facilities.

Process Diagram (Optional) - If you can, sketch out the principal steps of the process, showing interaction with existing facilities, on the back of the sheet.

Completed Forms should be returned to Peter Hudson, either by e-mail or hard copy to 705-3C. OR FAX ~~706~~ 7-6526

To: PETER HUDSON

From: PAUL McDonagh.

HLW SALT DISPOSITION PROCESS ALTERNATIVES

Alternative #: POM 18 ~~[illegible]~~ Sponsor: Paul McDonagh Date 3/19/98

X B- 1533

Title: Burning of Benzene In Place Of Propane At The Consolidated Incineration Facility

Description: The existing ITP Facilities should be used to optimize benzene production not minimize benzene production. The benzene produced should be used to replace or supplement the propane burned at the Consolidated Incineration Facility (CIF). CIF which is also in H-area, buys propane to burn in the kiln and in the secondary combustion chamber.

Technical Maturity: Theoretical Idea.

Safety Issues: Benzene storage at CIF.

Advantages: A) Save money at CIF by reducing or eliminating the need for propane. B) Adds BTU's to the kiln for a more complete burning of the wastes and thus a reduction in the amount of ash to be processed. C) Uses the existing ITP and CIF facilities. D) Optimizing benzene production will require adding greater amounts of STBP which may improve the efficiency precipitation process.

OSR 25-10 (Rev 6-18-92)

ENGINEERING COMPUTATION SHEET

Title of Project PAUL McDONAGH

Project No.

Subject 8-1533

Works

Computer

Date

Sheet No

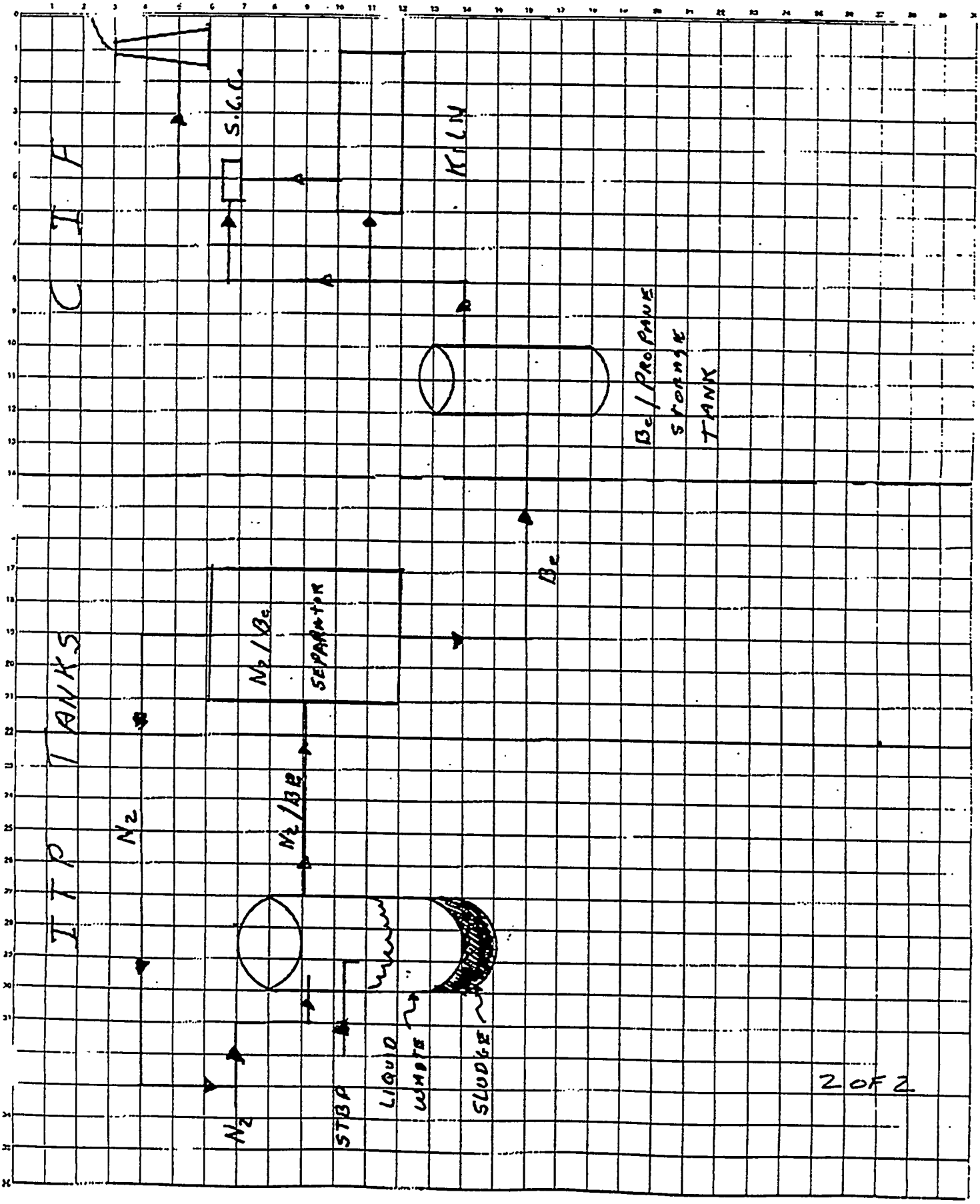

2 OF 2

P.02

HLW SALT DISPOSITION PROCESS ALTERNATIVES

Alternative #: ~~[illegible]~~ PSM 19 **Sponsor:** Papouchado **Date:** 3/26/98

Title: LAW Temperature ITP

Description: Extensive testing has shown that by keeping the temperature at ± 25°C during processing and storage, the rate of decomposition of tetraphenylborate is kept low (reduced benzene evolution).
Install chillers / cooling coils in existing TK 48, 49 and late wash, or in a redesigned small tank ITP process.

Technical Maturity: Extensive lab and some plant data to support approach.

Safety Issues: Safety issues are significantly reduced compared to existing ITP. Potential for benzene release still there.

Advantages: Relatively simple fix for existing process. Defense in depth for a redesigned ITP.
Can be combined with catalyst removal options.

Disadvantages: Cooling system may need to be safety class.

HLW SALT DISPOSITION PROCESS ALTERNATIVES

Alternative#: PoM20 Sponsor: J. P. Morin Date: 3/1798

Originator: J. P. Morin Phone #: 83214

Title: ITP With Safety Grade Air-Based Ventilation, Auxiliary Cooling and Backup Nitrogen.

Description:
Modification of the present ITP configuration (Tank 48 and 49) to provide:
1) A high flow (2000 - 5000 cfm) safety grade air-based ventilation system that will provide positive assurance that the vapor space of the tank will be adequately purged during all modes of operation.
2) A auxiliary cooling or refrigeration system using existing cooling coils to keep the contents of the ITP tanks below 20 oC.
3) The presently confugured nitrogen system would be modified to provide defense-in-depth inerting as a backup.

Technical Maturity:
These modifications require application of very mature and well established systems

Safety Issues:
These modifications do not introduce intrinsic safety issues. They do however, address both benzene formation and purge issues.

Advantanges:
Compared to alternatives, these modifications are relatively low cost and can be implemented quickly. The supporting R&D activities to close authorization basis chemistry issues can be completed in FY98 within the presently funded scope. Moreover, the authorization basis window of operations will be significantly widened over the current ITP configuration. This alternative provides an option to quickly return to processing salt solution even if a decision is made to pursue longer term second generation salt processing flowsheets.

High flow air-based ventilation will assure that the tank vapor space is purged of any combustible vapors that may form under both normal and abnormal conditions. In addition, the oxygen content in the tank vapor space will minimize the potential for developing anoxic conditions in the slurry which are necessary to reduce and activate potential catalysts. The cost of operating a nitrogen system will be minimized. Operation of the ITP process below 20 oC will assure that degradation reactions will not occur during the intended duration of the process cycle.

Disadvantages:

HLW SALT DISPOSITION PROCESS ALTERNATIVES

Alternative #: POM21 **Sponsor:** JT CARTER **Date:** 3/26/96

Originator: FLOWSHEET & CHEMISTRY TEAMS **Phone #:** 8-0037

Title: REDUCED TEMPERATURE ITP

Description: THE ITP PROCESS CHEMISTRY DATA SUGGESTS TWO COMPETING REACTIONS - CATALYST ACTIVATION AND TPB DECOMPOSITION. THE LATTER CAN'T OCCUR UNTIL THE FORMER HAS PROGRESSED SIGNIFICANTLY. THE FORMER APPEARS TO HAVE A LOW ACTIVATION ENERGY (50 KCAL/MOLE) INDICATING IT IS VERY TEMPERATURE DEPENDENT. DATA FROM TESTING SUGGESTS THIS REACTION IS NIL @ 25°C.

SOLUTION: CHILL TK 48 & 49 TO 25°C PROCESS IN EXISTING EQUIPMENT

Technical Maturity: EXCELLENT SUPPORTING DATA

Safety Issues: DOES NOT ADDRESS LACK OF MIXING IN TK48

Advantages: LOW COST FIX (ESTIMATED $15M @ 1990)

Disadvantages: DOES NOT ADDRESS ALL KNOWN ITP ISSUES

HLW SALT DISPOSITION PROCESS ALTERNATIVES

Alternative #: POM 22 **Sponsor:** J. T. CARTER **Date:** 3/26/96

Originator: Flowsheet & Chemistry TEAMS **Phone #:** 8-0037

Title: REMOVE CATALYST

Description: ITP CHEMISTRY STUDIES have INDICATED Pd & Cu ARE the PRIMARY CATALYST for TPB DECOMPOSITION.

SOLUTION: Remove both SOLUBLE AND INSOLUBLE Pd & Cu by A COMBINATION of FILTRATION AND TREATMENT (GT-73 OR FeS) for SOLUBLE METAL REMOVAL

Technical Maturity: MODERATE - REMOVAL CRITERIA ARE NOT KNOWN

Safety Issues: DOES NOT ADDRESS MIXING & RELEASE ISSUES IN ITP

Advantages: LOW CAPITAL COST

Disadvantages: DOES NOT ADDRESS ALL KNOWN ISSUES

HLW SALT DISPOSITION PROCESS ALTERNATIVES

Alternative #: COM23 **Sponsor:** J. Carlson **Date:** 3/27/98

Title: Application of Additional Engineered Safety Features to Existing ITP Process.

Description: Install "necessary and sufficient" engineered safety features on the ITP Process to handle air/Benzene generation rate safely. This would include upgraded, redundant ventilation systems and/or N_2 Purging Systems with backup power capabilities.

Technical Maturity: Currently, this technique is being used at SRS and in the commercial nuclear industry.

Safety Issues: None

Advantages: Uses existing design, minimal schedule impact to tank closure.

Disadvantages: Process chemistry issues still exist

POM 24

HLW SALT DISPOSITION PROCESS ALTERNATIVES

Alternative #: POM 24 **Sponsor:** Sam Kelly **Date:** 3/31/98

Title: Change safety basis for ITP to risk based criteria

Description: The accepted international approach to making a safety case for a an industrial nuclear facility which carries potential hazards is to apply a risk based safety analysis. In other words it is not necessary to prove that the facility is deterministically safe. Risk is the product of the frequency and the consequences of an event. Provided that risk is sufficiently low, a safety case can be made. eg. a holding HLW tank is one of the most serious potential hazards at Sellafield, so we have installed 5 independent methods of providing cooling to the tanks.

Technical Maturity: This method of risk analysis is widely practised in Europe and elsewhere.

Safety Issues: We have to be able to show that the ~~the~~ risk of a benzene deflagration is acceptably low in the current configuration of ITP. If not further engineering safeguards are needed.

Advantages: No modifications to ITP may be necessary.

Disadvantages: Having started the safety basis argument by trying to make a deterministic safety case, it will be an enormous challenge to convince the licencing authorities that we should change to a probabilistic safety case.

HLWALTFM:PIH/Rev 1
3/11/98

1.a

Hybrid

PRA → Deterministic w/ Mods

HWL SALT DISPOSITION PROCESS ALTERNATIVES

Alternative #: POM 25 **Sponsor:** Jack Watson

Title: Electrochemical separation of palladium (Pd)

Description: Pd is believed to be the principal catalyst involved in degradation of TPB. Removal of the Pd could consequently reduce the rate of TPB degradation. Pd is a noble metal that is usually easily reduced electrochemically, possibly by an applied electrical potential or by adding a more easily oxidized metal (more reactive metal). The Pd removal is likely to be most effective after sludge removal and before TPB addition. That would offer the best chance that the TPB precipitation can be carried out without the presence of significant Pd catalyst. The cathode or the bed of more reactive metal should be in the form of packed beds or plates that can be periodically removed. A relatively pure iron (not stainless steel) might be effective without an applied voltage, but that is strictly speculative. This probably should be a semicontinuous operation so the supernate is removed from the electrode as soon as the Pd is removed.

Technical Maturity:

Supernate is complex and the behavior of Pd is not sufficiently well understood at this moment. Is the Pd in an easily reduced form, not complexed with other organic materials? Is the plating rate sufficient, with or without applied voltage? This was only a conjecture; there are no data or experience.

Safety Issues Periodic removal of electrodes/bed. Less chance of TPB degradation if Pd is the only catalyst and if Pd is removed sufficiently effectively.

Advantages: Potentially low to moderate cost. Probably could fit with modified version of the current system, the modification with a separate precipitation tank.

Disadvantages:

An additional treatment step. Must know the catalyst is Pd and know the Pd chemistry in supernates.

Process Diagram (Optional)

INCLUDED UNDER POM 22

HWL SALT DISPOSITION PROCESS ALTERNATIVES

Alternative #: POM 26 **Sponsor:** Jack Watson

Title: Complex Pd, Cu, etc (and Keep Pd in solution complex - a combined write-up)

Description: Pd and Cu are suspected to be the catalysts that have enhanced TPB degradation significantly. The rate of TPB degradation could be slowed significantly if the catalysts were complexed by strong ligands added to the supernate. The ligands could also degrade, but if they last long enough for the precipitaion and removal of the Cs bearing solids, the catalysts could then go harmlessly to the grout facility. There are several strong ligands for Pt-metals such as Pd, and ligands for Cu are also available (often sulfur bearing ligands, but only trace quantities may be sufficient and will ultimately go to grout). If Pd on/in sludge particles participate in the catalysis, sludge remove prior to ligand addition and subsequent precipitation may be necessary.

Technical Maturity:

There is information on ligands for Pd and Cu, but the application to this problem is only conjectural. Will the complexed catalysts be inactive? Will the TPB itself be a ligand for the catalysts and compete with the added ligand? (Even a strongrer ligand may have difficult competing with the larger quanties of TPB being added to the system.) Must understand chemistry of the catalysts and the ligands in supernates.

Safety Issues Few issues if the ligand is harmless. Catalyst is still present with the TPB, and the ligand may not last for extremely long times; relatively prompt separation of the precipitate would still be desirable.

Advantages: A simple solution if suitable ligands are found and if it is not necessary to do the precipitation in a separate tank.

Disadvantages:

A lot must be learned about the catalysts, ligands, and TPB degradation. May require a separate precipitation tank.

Process Diagram (Optional)

INCLUDED IN POM5

766 H
Rm 1041

HLW SALT DISPOSITION PROCESS ALTERNATIVES

Alternative #: PON 1 **Sponsor:** J. Fo. **Date:** 3/25/95

Originator: J. FORTALZ **Phone #:** 8-6086

Title: "MODIFIED" ITP

Description: BASIC ITP PROCESS IN SMALLER EQUIPMENT WHICH CAN BE INERTED TO OPERATE WITH HIGH C_6H_6 CONCENTRATION; FILTRATION OCCURS VERY SHORTLY AFTER PRECIPITATION TO ELIMINATE "LOSS OF "D.F." ISSUE"; APPLY ENGINEERED SAFETY EQUIPMENT TO OPERATE WITH POTENTIALLY HIGH C_6H_6 CONCENTRATIONS

Technical Maturity: FULL NUCLEAR OPERATION (COLD TESTING OF DWPF SALT CELL)

Safety Issues: LOW; COMPARABLE TO DWPF SALT CELL

Advantages: USES PRESENT TECHNOLOGY

Disadvantages: HIGH COST; TIME TO IMPLEMENT; RETAINS ORGANICS IN HIGH RADIATION AREAS; RECYCLES ORGANICS TO TANK FARM FROM DWPF

HLW SALT DISPOSITION PROCESS ALTERNATIVES

Alternative #: ~~4~~ PON2 **Sponsor:** Lee Dworjanyn

Title: **In-line TPB Precipitation with In-line Homogenized Benzene/KTPB Separation**

Description:

Use rapid in-line processing to precipitate KTPB and separate by centrifugal processing with liquid benzene:

1. Feed HLW salt solution though an in-line homogenizer, metering in NaTPB and sodium titanate to form precipitate.
2. Feed the resultant slurry to a second homogenizer, metering in approx. 10,000 ppm liquid benzene to form globules.
3. Use "cream" centrifuge to separate the lighter benzene/KTPB fraction and forward to DWPF, recycling the benzene back.
4. Process residual salt solution through ITP cross-flow filtration. Pass on to SaltStone.

Reference:

Homogenized precipitation is used in industry. Milk homogenization and cream separation are standard in agriculture. Benzene concentration can be adjusted to control "cream" fluidity for effective separation.

Technical Maturity:

Precipitation is very rapid in test tube; homogenization will improve. Homogenized benzene/KTPB agglomeration has been demonstrated in a test tube.

Advantages:

- Very short holdup time, no time for KTPB decomposition.
- Compact commercial equipment.
- All benzene contained and recycled from DWPF.
- Benefits from proven KTPB decontamination factor.
- May be combined with K removal to reduce NaTPB cost.

Disadvantages:

- New technology, requires pilot demonstration.
- New shielded facilities.

Safety Issues:

- Benzene handling.

Key Technical Tests:

1. Confirm test tube precipitation, DF and separation.
2. Demonstrate continuous bench scale homogenized precipitation, agglomeration and separation.

Process Diagram: (Optional)

HLW SALT DISPOSITION PROCESS ALTERNATIVES

Alternative #: PON 3 **Sponsor:** James Brooke

Title: Small Tank T-48

Description: Utilize small batch, quick processing. Could use in-line or in-tank TPB precipitation

Reference: James Brooke recommendations

Technical Maturity: Brooke conceptual studies and recommendations.

Advantages: Uses TPB knowledge.

Disadvantages: Late wash possibly needed. Salt cell needed. Investment costs.

Safety Issues

Key Initial Tests: Cycle time.

Process Diagram (Optional, see reverse side):

See James Brooke's flow sheets or/and ITP flow sheet team flow sheets

Sit 1 of 11

HLW SALT DISPOSITION PROCESS ALTERNATIVES

Alternative #: PON 4 **Sponsor:** DRAGAN ZIVKOVIC **Date:** 3/17/98

Title: THE UNIVERSAL TANK DESIGN FOR HIGH LEVEL WASTE CLEANING AND BENZENE BURNING

Description: THE UNIVERSAL TANK FOR HLW CLEANING IS ABOVE THE GROUND TANK SURROUNDED WITH 10 FT THICK CYLINDER FILLED WITH WATER. TANK IS DEVIDED IN THREE COMPARTMENTS. FIRST COMPARTMENT HOUSES HLW, SECOND HOUSES EQUIPMENT FOR ITP PROCESS AND THIRD COMPARTMENT HOUSE A SPECIAL TANK BURNER OF EXPLOSIONPROOF TYPE DESIGN WHICH IS USED TO BURN OF BENZENE. THE BURNING OF BENZENE IS ACHIEVEDBY MIXING THE BENZENE WITH OXYGEN CREATING EXPLOSION INSIDE OF THE EXPLOSIONPROOF TANK.

Technical Maturity: THE BENZENE BEING DEVELOPED IN THE HLW TANKS WILL EXPLODE AT THE CERTAIN RATIO WHEN MIXED WITH OXYGEN OR AIR. MODEL BUILT TO SCALE IS REQUIRED TO PROOF OPERATION.

Safety Issues: BENZENE PROBLEM WILL BE COMPLETLY ELIMINATE

Advantages: SIMPLICITY AND LARGE SAVINGS OF MONEY IN A LONG RUN

Disadvantages: NEEDS MINIMAL CAPITAL FOR NEW FACILITY AND TESTING WITH MODEL TO OBTAIN THE BEST DIMENSIONS OF ACTUAL UNIT

UNIVERSAL TANK FOR HLW CLEANING

1. DESIGN AND BUILD THE NEW HLW STORAGE TANK WHICH WILL HOUSE THE ENTIRE WASTE ACCUMULATED IN 50 TANKS FOR LAST 40 YEARS. THIS TANK WILL BE COMPARTMENTALIZED. APPOXIMATELY HALF OF THE TANK WILL BE USED TO HOLD 37 MILLION GALLONS OF WASTE. ONE QUATER WILL BE USED FOR ITP PROCESSES AND WASTE PREPARATION FOR DWPF VITRIFICATION. ONE QUATER WILL BE USED TO HOUSE THE TANK BURNER WHICH IS USED TO BURN AND ELIMINATE BENZENE.

2. DESIGN AND BUILD TWO NEW WASTE TRANSFER PUMPS OR USE EXISTING STEAM EJECTORS (MODIFIED) TO TRANSFER WASTE FROM THE EXISTING TANKS TO THE NEW TANK.

3. BUILD THE NEW DWPF TO DOUBLE CAPACITY OF VITRIFICATION AND BOTTLING.

4. DESIGN AND BUILD CONNECTION BETWEEN THE EXISTING CANYONS AND THE NEW TANK FOR SUPPORT OF FUTURE USE OF CANYONS

H.T GENERATED IN THE TANK IS USED TO ELIMINATE MOISTUR IN HEATERS. OF THE TANK PURGING SYSTEM.

THE CALCULATED APPROXIMATE DIMENSIONS OF THE NEW TANK;

- DIAMETER 350 FT
- HEIGHT 40 FT } (4,950,000 FT^3)

ASSUMING THAT ONLY F AREA OR H AREA IS EMPTIED AT ONCE

- DIAMETER 250 FT
- HEIGHT 40 FT } (2,473,000 FT^3)

ASSUMING THAT 10 TANKS ARE EMPTIED AND TRANFERED INTO NE TANK FACILITY

- DIAMETER — 110 FT
- HEIGHT — 40 FT

TANK SHOULD BE BUILT FROM CARBON STEEL, AFTER USE (10 YEARS) DECONTAMINATED AND MELTED.

BASIC CONCEPT

SH, 2F 11

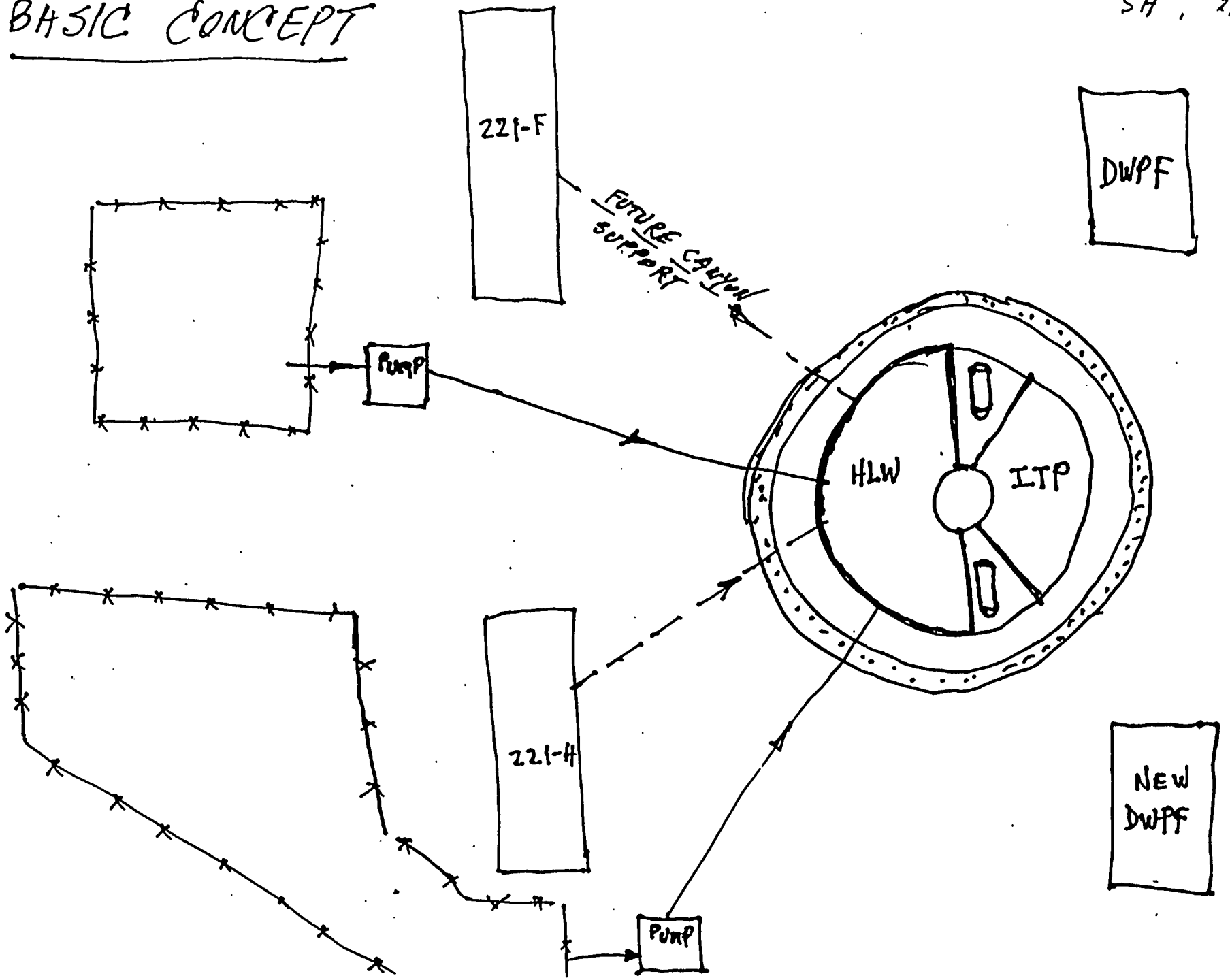

SPECIAL DESIGN OF NEW TANK

1. THE NEW TANK WILL BE OF THE SPECIAL DESIGN CONSISTING OF THREE MAIN COMPARTMENTS;
   - FIRST COMPARTMENT HOUSES ENTIRE WASTE 37 M GALLONS
   - SECOND COMPARTMENT HOUSES ITP EQUIPMENT AND SERVICES DWPF,
   - THIRD COMPARTMENT HOUSES THE EXPLOSIONPROOF TANK BURNER USED TO BURN BENZENE

2. THE NEW TANK IS EQUIPT WITH THE SINGLE PURGE SYSTEM, SINGL VENTILATION SYSTEM AND SPECIAL MONITORING SYSTEM FOR VISUAL OBSERVATION OF THE WASTE INSIDE OF THE TANK USING STATE OF ART MODERN HIGH TECH DEVICES AND DATA ACQUISITION SYSTEM.

3. THE TANK IS EQUIPED WITH NEW DEVICE FOR SAMPLING AND ELECTRIC GAS BURNER.

4. TANK IS BUILT ABOVE THE GROUND AND IS ENCIRCLED BY 10 FEE THICK FILLED WITH WATER CYLINDER FOR RADIATION PROTECTION. THE WATER FROM THIS CYLINDER IS USED TO COOL WASTE IN THE TA

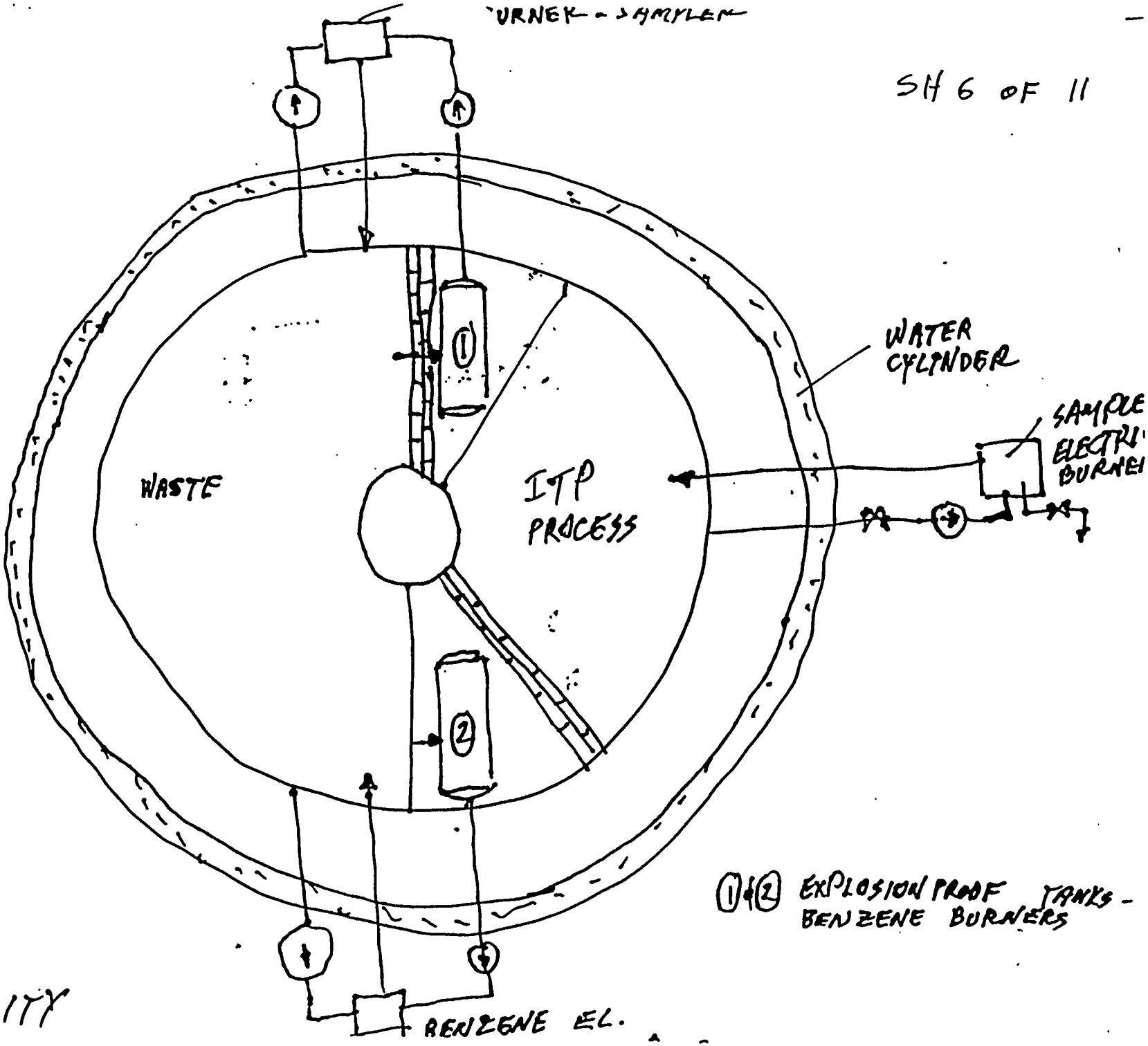

TANK FACILITY

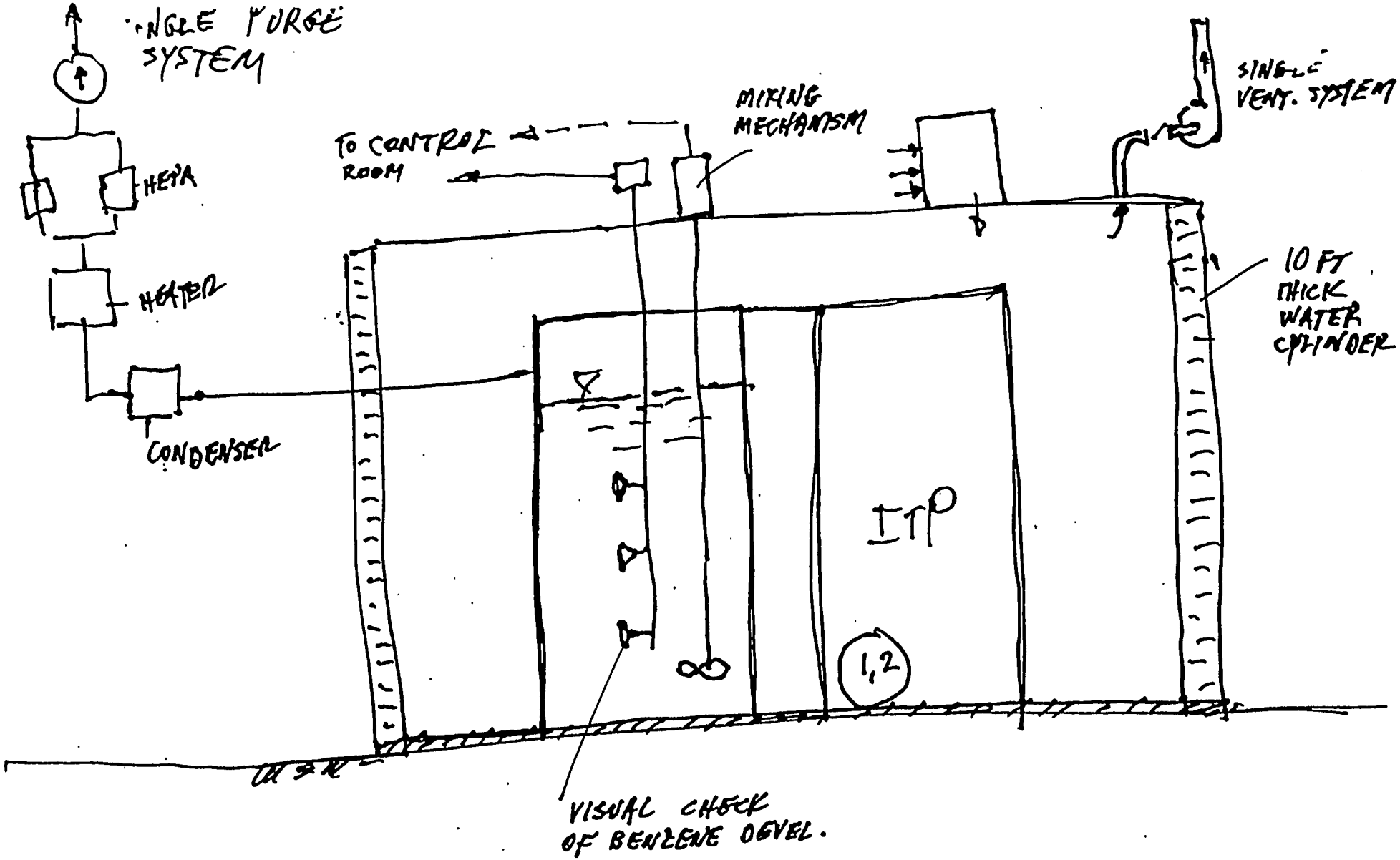

TANK CONCEPTUAL DESIGN

PRINCIPLE OF OPERATION OF TANK BURNER OF BENZENE

THE NEW HLW TANK IS CONNECTED BY PIPING TO THE TANK BURNER. THERE ARE MORE PIPE CONNECTIONS AT THE TANK LOCATED AT DIFFERENT ELEVATIONS SO THAT THE HIGHEST RATE OF BENZENE DEVELOPMENT CAN BE DETECTED AND RELEASED INTO EXPLOSION PROOF TANK BURNER. ONCE THE MIXTURE OF BENZENE AND SLUDGE IS INSIDE THE TANK BURNER, THE VALVES BETWEEN WASTE TANK AND TANK BURNER ARE CLOSED ISOLATING MAIN WASTE TANK FROM TANK BURNER. THEN, VERY SLOWLY THE VALVE FOR OXYGEN SUPPLY IS OPEN LETING THE OXYGEN INSIDE THE TANK BURNER. AT THE CERTAIN RATIO OF BENZENE TO OXYGEN THE EXPLOSION WILL TAKE PLACE AND BENZENE WILL BURN INSIDE TANK BURNER. AFTER EXPLOSION THE FUSHING WATER SYSTEM IS USED TO WASH THE TANK BURNER AND THE MIXTURE IS RETURNED TO THE MAIN WASTE TANK BY PUMP.

THIS PROCESS IS REPEATED AGAIN AND AGAIN AS LONG AS THE EXPLOSION INSIDE TANK BURNER IS TAKING PLACE. WHEN THE EXPLOSION INSIDE THE TANK BURNER STOPS TO TAKE PLACE THEN ALL BENZENE INSIDE OF MAIN WASTE TANK IS BURNED OUT.

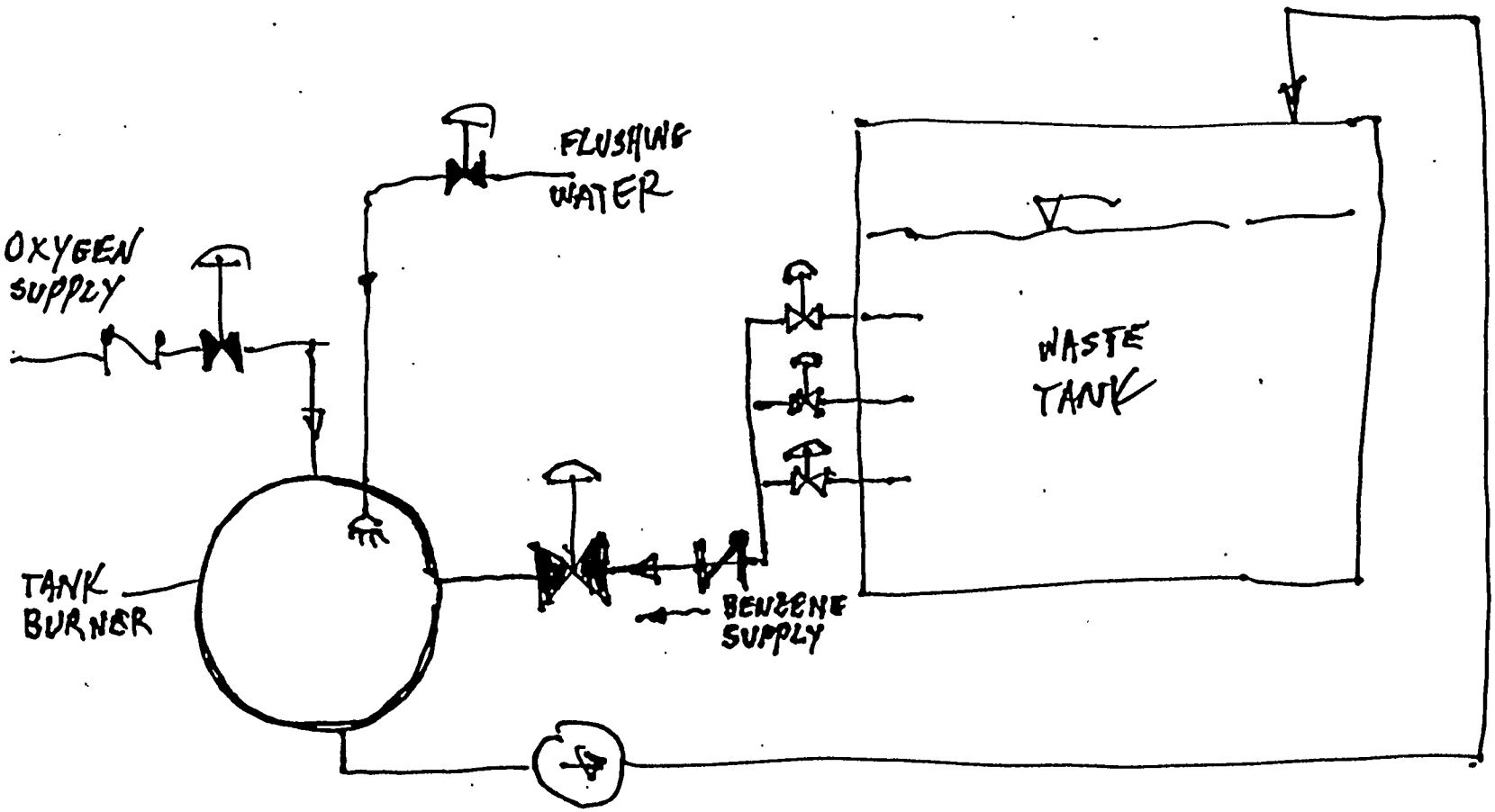

EXPLOSION PROOF TANK-BURNER OF BENZENE

BUILDING MODEL OF TANK BURNER AT SRTC-LAB

1. DESIGN AND BUILD MODEL TO SCALE 1:10 IN THE SRTC-LAB CONSISTING OF WASTE TANK EQUIPT WITH THE EQUIPMENT CONTAINED IN THIS PROPOSAL.

2. PERFORM TESTS USING THE TANK FARM EXISTING SLUDGE, DEVELOP AND DETERMINE THE ACTUAL PARAMETERS;
   - BENZENE GENERATION RATE
   - AMOUNT OF OXYGEN REQUIRED TO CAUSE EXPLOSION
   - CHEMICAL COMPOSITION OF SLUDGE AFTER ALL BENZENE IS BURNED

COST BENEFITS

INITIAL INVESTMENT

- NEW DWPF ..... 3,000 M
- PUM TRANSFER ..... 1,000 M
- TANK FACILITY
  - ITP TO FEED 2 DWPF ..... 1,000 M
  - 2 TANK BURNERS FOR BENZENE ..... 500 M

INVESTMENT TOTAL 5,500 M

SAVING FOR CLOSING OF HLW FACILITIES

- OPERATION + MAINT. OF H-AREA FOR 15 YEARS 15x(400M) = 6,000M
- OPERATION + MAINT. OF F-AREA FOR 15 YEARS 15x(400M) = 6,000M
- COMPLETE VITRIFICATION IN 15 YEARS 15x(600M) = 9,000 M

SAVINGS TOTAL = 21,000 M

NET SAVING = (21,000 - 5,500)M = 15,500

Alternative #: P0N5 Sponsor: C. Wayne Jenkins Date: 3/18/98

Originator: C. Wayne Jenkins Phone #: 5-3049

Title: Small Precipitation Facility

Description: Construct a small facility to perform the same precipitation process intended for ITP except perform it in a small tank constructed for that purpose equipped with all the agitation and off-gas handling equipment needed to solve the problems encountered in ITP.

Technical Maturity: This process would take advantage of the years of development put into the ITP process. The kind of facility that would be needed is very much like the equipment operated in the existing canyons. The is no new technology needed.

Safety Issues: I am not fully aware of all the ITP concerns. I am assuming that better control of the precipitation process in manageable volumes and in a flexible facility would take care of all the safety concerns with ITP.

Advantages: No new technology development would be needed. Any new direction will have it own set of unknowns to overcome. At least with the ITP process and the years of work put into it we know what the problems are and should be able to deal with them. This approach would also utilize all of the exiting facilities and processes up and down stream of the new precipitation facility.

Disadvantages: Capital money will be needed, but almost any solution will require that and this facility should be relatively simple and does not have to be very large. Size may be dictated by desired throughput.

HLW SALT DISPOSITION PROCESS ALTERNATIVES

Alternative #: PON 6 Sponsor: James Brooke Date: 27 March, 1998

Originator: James Brooke Phone #: 5-8168

Title: Small tank ITP with Power Fluidic devices for feed tank blending, salt solution transfer and sampling, reagent-salt solution mixing, precipitate aging, and benzene stripping

Description: Two modest modifications overcome the present ITP problems and create a much simpler, robust and intrinsically safer Cs removal operation without changing the chemistry of the process in any way. The two changes are: (1) Changing to a just-in-time batch size using a 10-12,000 gallon process tank and no separate precipitate storage tank and (2) Using Power Fluidic devices for feed tank blending, salt solution transfer and sampling, reagent-salt solution mixing, precipitate aging, and benzene stripping.

Technical Maturity: Very mature. The only parameter needing confirmation is the time needed for precipitate aging to achieve the required Cs decontamination factor. Small, Power Fluidic devices will probably achieve the needed time easily. There are similar examples in current commercial operation. All of the Power Fluidic devices are demonstrated in similar commercial nuclear operations. The small tank ITP operation was demonstrated during the ITP startup testing.

Safety Issues: Benzene production will be virtually nil because (a) temperatures will be <30 degrees C at all times, (b) maximum TPB inventory will be 1/10-1/20th of present, and (c) TPB residence time will be only a few days instead of months to years. The process tank will be purpose designed to safely handle all accident scenarios. Analysis to confirm DF is done on-line, real-time; no tank sampling required.

Advantages: SIGNIFICANT BENEFITS from these modifications include (there are many others less significant):

1. Virtually eliminates precipitate breadkown and concomitant benzene formation
2. Eliminates Late Wash Facility ($9M/yr saving)
3. Cuts the volume of Saltstone by up to 20%
4. Returns 3 of 1.2M gallon waste tanks to tank farm operations (T49, T50, & T22)
5. Eliminates eleven (11) long-shaft vertical centrifugal pumps
6. Cuts nitrogen usage by 75-85%
7. Eliminates reagent storage tanks (STPB & MST)
8. Provides a robust filter cleaning system (present one probably won't work)
9. Improves filtrate production rate by up to 50%
10. Greatly simplifies and improves operability of benzene stripper system & eliminates TBP

Disadvantages: A pilot demonstration ($250k) should be done. Planning grade cost estimate is $23 million (detailed & w/ 75% mgmt reserve)

ITP - JIT OPTION 2 WITH POWER FLUIDICS EQUIPMENT

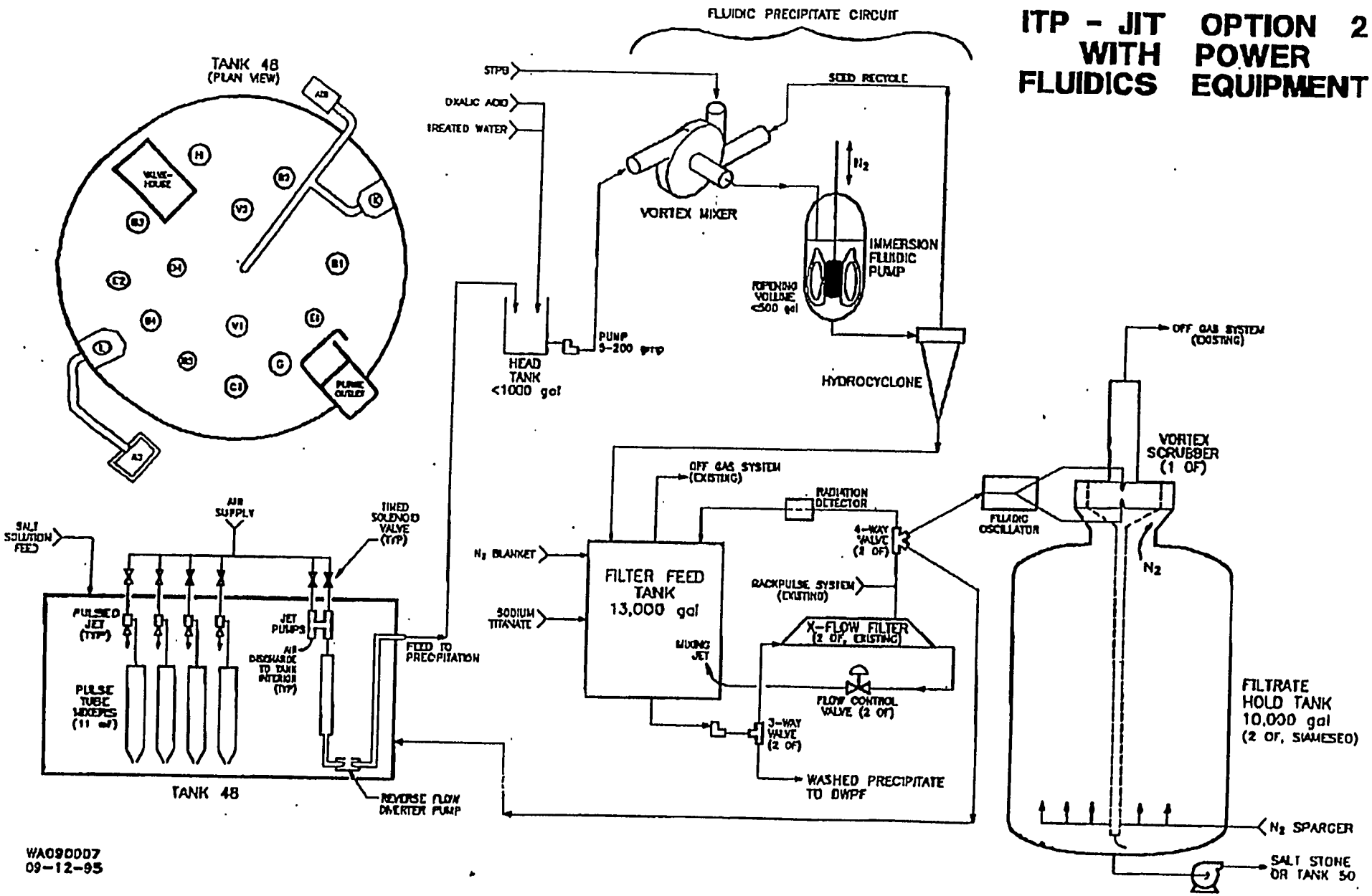

WA090007
09-12-95

SKIC 1/JA
003

HLW SALT DISPOSITION PROCESS ALTERNATIVES

Alternative #: PON 7 **Sponsor:** J. T. CARTER **Date:** 3/26/98

Originator: FLOWSHEET / CHEMISTRY TEAMS **Phone #:** 8-0037

Title: PROPERLY CONFIGURED TPB PROCESS
(CONTINUOUS PRECIPITATION / BATCH WASHING)

Description: (SEE ATTACHED SKETCH) CONVERT THE PRECIPITATION PROCESS TO CONTINUOUS 3 STAGE DECONTAMINATION PROCESS. FILTER TO 10wt% USING EXISTING TECHNOLOGY AND WASH BATCHWISE IN THE LATEWASH FACILITY. PROVIDE FILTRATE STORAGE TO DECONTAMINATE SALTSTONE AND LATEWASH TO OTHER HLW FACILITIES. THIS PROPOSAL ADDRESSES THESE CONCERNS:
BENZENE GENERATION: CHILL TO ≤ 25°C TO PREVENT CATALYST ACTIVATION
CATALYST REMOVAL IS AN OPTION
BENZENE RELEASE: AGITATED TANKS IMPROVES MASS TRANSFER

Technical Maturity: EXCELLENT - NO KNOWN ISSUES. POTENTIAL AREAS FOR IMPROVED TECHNOLOGY APPLICATIONS INCLUDE: CATALYST REMOVAL; IMPROVED KINETICS OF PRECIPITATION TO ALLOW REDUCED CSTR VOLUMES / STAGES; AEA MIXER TO REPLACE CSTRS

Safety Issues: KNOWN SAFETY ISSUES ARE ADDRESSED BY 1) CONTIN. AGITATION TO FORCE RELEASE = GENERATION (NO ACCUMULATION) 2) LOW TEMP TO REDUCE GENERATION RATE 3) SECONDARY CONFINEMENT TO ALLOW N_2 BLANKET (MOC) CONTROL AND CELL VENTILATION AS D.I.D.

Advantages: ALL KNOWN TPB ISSUES ADDRESSED

Disadvantages: DOES NOT RECYCLE H_2O - SOME ADDITIONAL SALTSTONE PRODUCTION; REQUIRES CONSTRUCTION OF NEW SHIELDED SPACE

OSR 19-189 (6-11-91)
Stores: 26-13706.00

Calculation Sheet

SRS — SAVANNAH RIVER SITE

Project	Calculation No.
PROPERLY CONFIGURED TPZ PROCESS	
Subject	Sheet No.

Rev	Originator	Date	Checker	Date	Rev	Originator	Date	Checker	Date
—	JTC	3/26/98							

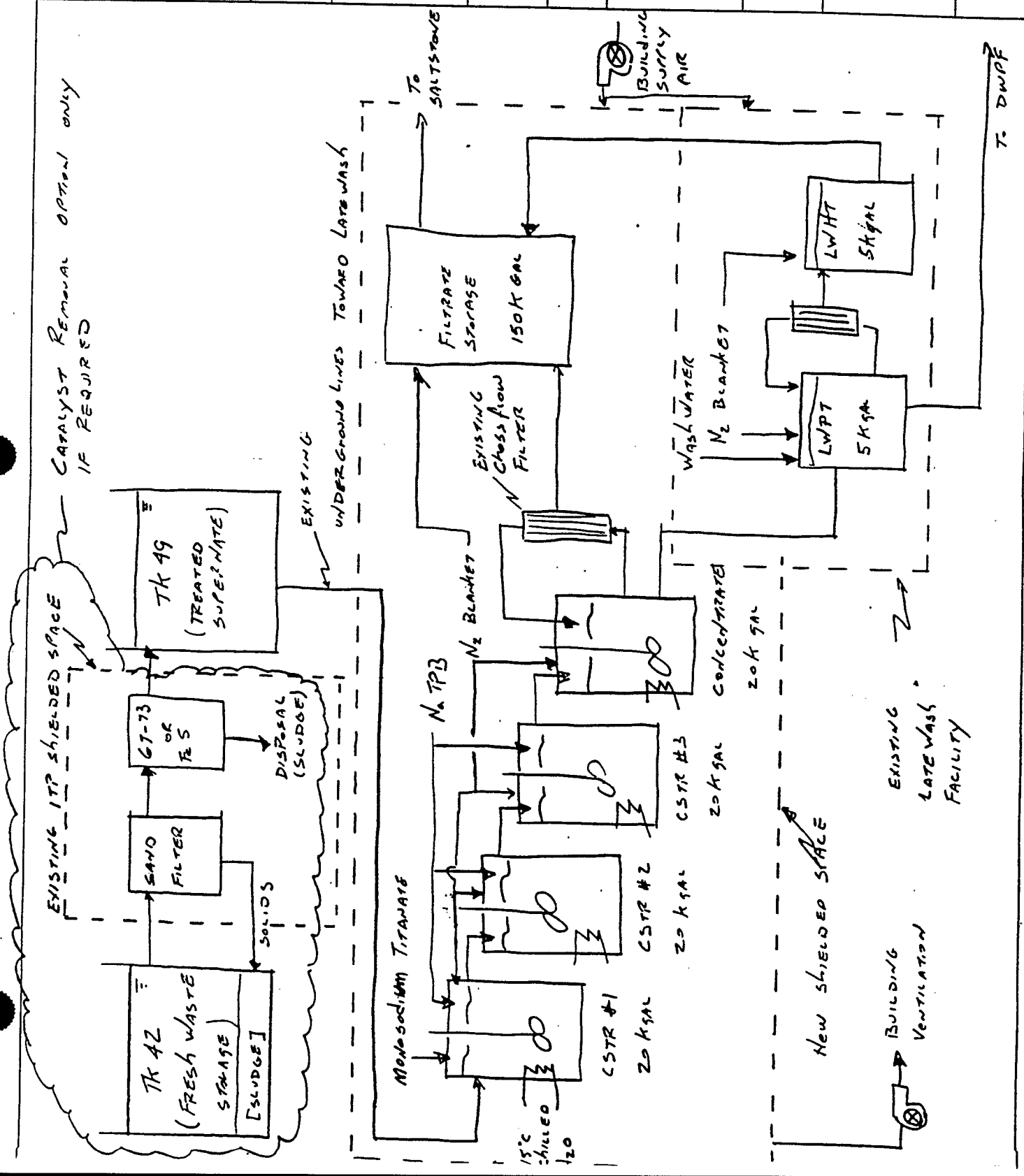

HLW SALT DISPOSITION PROCESS ALTERNATIVES

Alternative #: PON 8 **Sponsor:** Mike Hitchler **Date:** 3/25/98

Originator: J. Kelly Thomas **Phone #:** 502-9761

Title: Small-Batch TPB Precipitation Process With Multiple Process Vessels

Description: The proposed process alternative would utilize the same basic TPB precipitation reaction scheme as the current ITP flowsheet as implemented in Tank 48. The major difference is that the process would be carried out in a set of small (≈15 kgal) process vessels rather than in a single large waste tank. It is anticipated that 4 to 8 such vessels would be required to meet the desired DWPF feed rate.

Technical Maturity: The process technology has a high technical maturity level. It has been demonstrated in Tank 48 and has recently been the focus of an extensive set of laboratory studies. Similarly, the basic engineering technology required to implement the process in a set of small process vessels is well-known and has been employed in a large number of site facilities (DWPF, Separations, Tank Farm Diversion Boxes, etc.). Only the (optional) application of catalytic agent precipitation/filtration step (discussed below in Disadvantages section) would represent process technology which has only been demonstrated at the laboratory scale.

Safety Issues: The key safety issue associated with this process would be the formation of a flammable mixture in the tank vapor space due to the evolution of hydrogen and benzene. However, this issue has been successfully addressed in DWPF process vessels where the hydrogen and benzene evolution rates are much larger than would be the case for this process (several of the DWPF Salt Process Cell vessels contain liquid benzene mixtures). The success of the DWPF strategy in addressing the vapor space flammability safety issue rests on two key points. The first key is demonstrate that the vessel can be inerted with a very high degree of reliability. The use of small process vessels which can be effectively sealed accomplishes this goal (vs. the use of a waste tank with large air inleakage rates). The second key is to provide a building structure and ventilation system that could withstand a vessel explosion. This allows an AB to be constructed that does not require 100% assurance that no flammable mixture of any size would ever form in the tank vapor space. Potentially, due to the relatively low off-site doses associated with precipitate, the building structure and ventilation system may only have to safety significant (vs. safety class).

Advantages: The proposed process alternative would have both process and safety advantages. Each of these areas are discussed below.

The use of multiple small process vessels would facilitate both improved mixing and cooling of the precipitate slurry. Improved mixing would minimize process time and increase the efficiency of the precipitation reaction. This mixing could be achieved with standard engineering technology due to the reduced batch volume. Improved cooling of the slurry would increase the time period prior to which precipitate decomposition reactions would commence (e.g. increase the reaction incubation period) and decrease the decomposition rate after this time period. The vessels could be constructed of stainless steel so as to allow the product to be delivered directly to DWPF; this would remove the need for the current Late Wash Facility. The use of small batches would eliminate the storage of precipitate over extended time periods, hence reducing the potential for significant precipitate degradation. This arrangement would also reduce heel size thus decreasing the effective precipitate residence time.

As discussed in the preceding section, the use of small vessels which can be reliably inerted along with a robust building structure and ventilation system has proven to be an effective AB strategy with respect to safety. With respect to worker safety and environmental impact, the proposed arrangement would decrease worker exposure and reduce the potential for surface leaks and spills.

Disadvantages: There are two disadvantages to the proposed process alternative. The first is that a new facility would have to be constructed. It is possible that an existing facility could be used for this purpose with modifications and additions. Specifically, since it would no longer be required, the Late Wash Facility could potentially form the core of the new precipitation process facility.

The second is that an unanticipated DWPF outage could result in an unfiltered precipitate batch undergoing an unacceptably large degree of precipitate decomposition (filtered batches could still be transferred directly to DWPF). This may be acceptable since unanticipated DWPF outages would not occur frequently and the batch could be recovered by re-precipitation. Alternatively, a catalytic agent precipitation/ filtration step could be employed to decrease the potential for precipitate decomposition.

HLW SALT DISPOSITION PROCESS ALTERNATIVES

Alternative #: PON 9 **Sponsor:** SRTC **Date:** 26 Mar 98

Originator: Pat Suggs **Phone #:** 8-1482

Title: Use of tri-xylyl monohydroxyborates to precipitate Cs.

Description: As described in the attached patent. The author recommends something other than triphenylboron, which is familiar to us as an intermediate breakdown product from tetraphenylborate.

Ksp not stated in patent.

Technical Maturity: Unknown, assume lab work to support patent. This chemical is probably not off-the-shelf. Patent author would have to provide instructions for making.

Safety Issues: Similar to tetraphenylborate, however, if decomposed, xylene has a flashpoint of 81°F versus benzene's flashpoint of 12°F.

Advantages: Personnel exposure limits are 100x that of benzene. Permitting not required.

Appears to concentrate on Cs, not K (see attached SRTC doc) 99% of the Be source term comes from K

Disadvantages: Probably susceptible to catalytic attack. Large volume required? 25% by weight of aqueous additive OR or of solution to be decontaminated.

HLW SALT DISPOSITION PROCESS ALTERNATIVES

Alternative #: PON 10 Sponsor: Sam Fink

Title: Coupled Rapid (or Pre-filtered) Tetraphenylborate Precipitation, Subsequent Incineration and Vitrification of Resultant Ash. (VARIANT: Retain Tank 48H processing adding pre-filtration of sludge and process resulting precipitant directly to incinerator.)

Description: Replace the baseline precipitation facility with a small scale unit or add a pre-filter system -- likely cross-flow filter. Send concentrated and partially washed product to an incinerator -- preferably a low temperature fluidized bed, perhaps a toroidal design -- presumably sited within DWPF in space currently housing precipitate hydrolysis operation. Incorporate ash directly in SRAT.

Reference: Tetraphenylborate and incineration technologies well established. Pilot demonstrations needed for integrated processes.

Technical Maturity: Conceptual union of previous proposals by L. M. Lee and L. L. Kilpatrick (SRTC-PTD-94-0051, L. Lee (SRTC-PTD-94-0090), and James Brooke (e.g., ECS-105-95-0006). Preliminary material balances and early design cost estimates exist for segments of the proposed alternative.

Advantages: Replaces the current ITP, Late Washing, and Precipitate Hydrolysis Facilities. Claimed advantages (from incineration) include: elimination of flammable benzene recovery and handling, eliminates organic accumulation in SRAT and SME off-gas systems, avoids hydrogen formation in Chemical Processing Cell, reduces ammonia formation, eliminates recycle of organic residues to the tank farm, eliminates use of copper in DWPF as catalyst for precipitate hydrolysis thereby expanding glass formulation window, avoids Late Washing recycle stream to tank farm. Additional advantages cited in referenced reports.

Disadvantages: Capital cost and schedule for installation of new equipment. Cost of pilot demonstration. Political adverse perception of incinerator based technologies.

Safety Issues Common concerns associated with cesium volatility and gaseous by-products from incomplete combustion of organic species.

Key Initial Tests: (1) SRTC tests with filtered waste to establish maximum benzene formation rate. Necessary to define whether installation of pre-filter suffices or the need for a new, smaller scale and contained precipitating facility. (2) Vendor trial burn with tetraphenylborate slurry to assess complexity of off-gas issues. (3) Vendor tests (e.g., AEA Technology Engineering Services) to examine precipitation in leading candidate equipment.

Process Diagram (Optional, see reverse side) Not provided at this time. However, referenced documents provide sufficient fragments for initial evaluation.

Alternative #: PON 11 Sponsor: Sam Fink

Title: Cesium (Alkaline Soluble) Complexation and Ultrafiltration

Description: Complex cesium with any of several alkaline soluble polymer complexes. These complexes would include, for example, the cesium specific functional entities used in manufacture of ion exchange resins. (Candidates require additional research.) Use ultrafiltration to take advantage of large molecular weight of the resulting complex. (Current researchers in this technology include Gordon Jarvinen and Barbara Smith at LANL.)

Reference: Ultrafiltration exists as a well developed technology. Pilot scale demonstration (72 gpm) of technology in progress at LANL for removal of actinides from acidic wastes. LANL operates a user facility for this technology.

Technical Maturity: Additional feasibility testing needed to screen candidate complexants; rapidly ready for pilot testing or deployment at demonstration scale.

Advantages: Well developed equipment. Used on large nuclear scale by BNFL (per statement by P. Hudson). Appears conceivably easy to stage within the Late Washing Facility.

Disadvantages: Uncertain of separation efficiency at this time. Lack of testing on integrated flow sheet through vitrification. Possible need for organic destruction step prior to vitrification. Nitrate and sodium content of material high without a wash step.

Safety Issues Largely dependent on chemistry of selected complexant. Leading candidates include several organic compounds.

Key Initial Tests: Screening tests on efficiency of removal for leading complexant candidates. Need a decision on requirement for multi staging of the

complexant/filtration steps. (Recommend assuming a two stage process until further data available.)

Process Diagram (Optional, see reverse side) Not provided.

Alternative #: PØN 12

Sponsor: D.J. McCabe (TRUSTATIS)

Title: Alternate Precipitating Agents for Cesium Removal

Description: (a) Add cesium-specific precipitating agent other than TPB; (b) filter precipitate; (c) Vitrify cesium precipitate. Decomposition of precipitating agent may be necessary prior to vitrification, similar to "Hydrolysis" of TPB.

Reference: Limited laboratory-scale testing performed.

Technical Maturity: Best reagent available is sodium cobalt dicarbollide, which very slowly decomposes in caustic. Other compounds that could be investigated include several caged carbaboranes, tetra(α-thienyl)boron, hexachloroplatinate.

Advantages: Utilizes existing equipment; Minimal implementation costs; new reagents may be directly compatible with vitrification, eliminating hydrolysis.

Disadvantages: Unproven technology with these reagents; Basic research on applicability needed; Vitrification of precipitate untested; Expensive precipitating agents; chloride from hexachloroplatinate.

Safety Issues: Potential explosivity of borane decomposition products;

Key Initial Tests: Solubility of potassium salt of cobalt dicarbollide. Solubility of cesium salts of other precipitating agents listed.

Process Diagram (See reverse side):

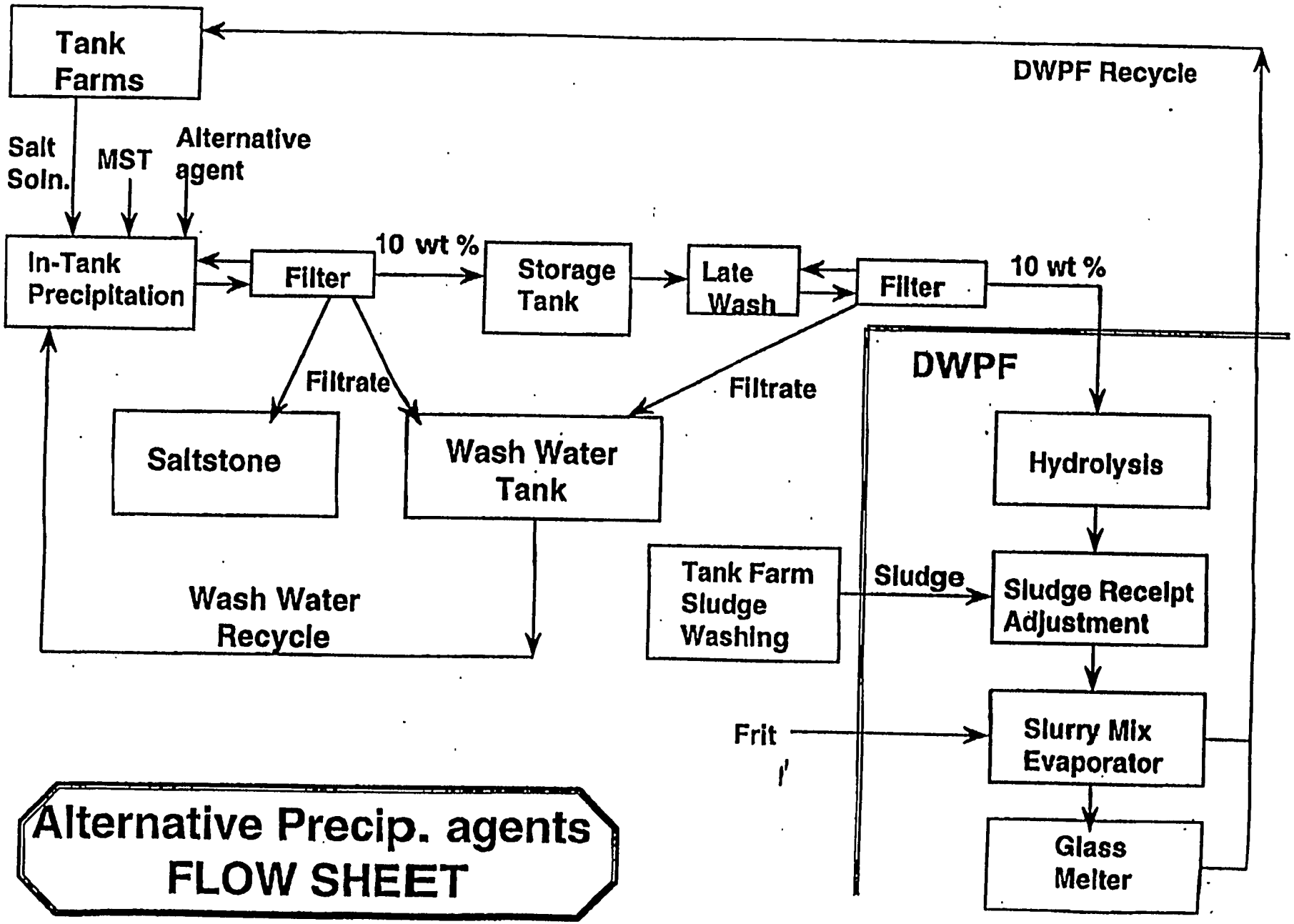

Alternative Precip. agents FLOW SHEET

HLW SALT DISPOSITION PROCESS ALTERNATIVES

Alternative #: PON 13 Sponsor: R.A. Peterson (THERMOSAITIS)

Title: Complexing agent and ultrafiltration

Description: Any resin that is selective as a cesium ion exchange resin could also be used as a simple complexing agent. The resulting cesium complex could then be separated by a simple filtration step. This filtration step would require the use of a relatively selective membrane. The membrane would need to pass the bulk of the salts but still retain the slightly larger cesium complex. A typical ultrafiltration membrane would likely be required (depending on the size an chemistry of the complex). The filtrate would be sent straight to saltstone while the supernate would be sent to DWPF. Downstream, one could either recover the complex (if possible) or if the glass formulation allows, vitrify directly. Washing would not be required since one could concentrate the cesium complex to as high a concentration as can be handled.

Technical Maturity: Conceptual stage

Advantages: Eliminates tetraphenylborate chemistry and relies upon only one additional unit operation. Also utilizes a simple filtration step in place of an ion exchange column, thereby eliminating the need to replace resin.

Disadvantages: Complexing agent may not be recoverable, resulting in significant operating costs. While membrane material exist that can operate under the highly caustic conditions, operation under this regime is atypical and would likely required additional developmental work.

Safety Issues: High cesium concentration in retentate from filter unit.

Key Initial Tests: Identification of complexing agent. Testing capacity of selective membranes.

HWL SALT DISPOSITION PROCESS ALTERNATIVES

Alternative #: PON 14 **Sponsor:** Jack Watson

Title: **Combine precipitation and solids removal in one unit**

Description: This is not a separate technology, but a possible different operations mode. The two operations would be performed in rapid secession and continuously to minimize the time for TPB degradation. Actual use of a "single unit" is less important than the rapid sequence of the two operations and the minimization of residence of TPB with supernate before solids separation to remove cesium

Technical Maturity:

Much needs to be known about TPB precipitation and the subsequent solids removal. How much residence time is needed for precipitation and growth of suitable size solids to make separation practical? Removal of sludge prior to TPB addition would probably be necessary to remove the small sludge particles; hopefully TPB particles can be made to grow rapidly to sizes that are more easily removed. Would recycle of seed solids be helpful? Solids separation must be rapid for this approach to differ significantly from the standard ITP operations. Need continuous solids removal. Can hydroclones or centrifuges be used? Cross-flow filtration may not be able to produce a concentrate with sufficiently high solids content.

Safety Issues The usual safety issues would be reduced because the time for benzene formation would be reduced. Inventory of TPB and sludge solids mixture would be essentially eliminated. Centrifuges (if necessary) would involve mechanical safety issues, could breakdown spread contamination?

Advantages: Potentially compact unit. Similar to ITP. Little TPB degradation likely.

Disadvantages:

When reducing the time between TPB addition and solids separation, the precipitation step needs to be understood very well.

Process Diagram (Optional)

Included in PON 8

HLW SALT DISPOSITION PROCESS ALTERNATIVES

Alternative #: PON 15 **Sponsor:** Mike Hitchler **Date:** 3/25/98

Originator: J. Kelly Thomas **Phone #:** 502-9761

Title: Small-Batch TPB Precipitation Process With Multiple Process Vessels

Description: The proposed process alternative would utilize the same basic TPB precipitation reaction scheme as the current ITP flowsheet as implemented in Tank 48. The major difference is that the process would be carried out in a set of small (15 kgal) process vessels rather than in a single large waste tank. It is anticipated that 4 to 8 such vessels would be required to meet the desired DWPF feed rate.

Technical Maturity: The process technology has a high technical maturity level. It has been demonstrated in Tank 48 and has recently been the focus of an extensive set of laboratory studies. Similarly, the basic engineering technology required to implement the process in a set of small process vessels is well-known and has been employed in a large number of site facilities (DWPF, Separations, Tank Farm Diversion Boxes, etc.). Only the (optional) application of catalytic agent precipitation/filtration step (discussed below in Disadvantages section) would represent process technology which has only been demonstrated at the laboratory scale.

Safety Issues: The key safety issue associated with this process would be the formation of a flammable mixture in the tank vapor space due to the evolution of hydrogen and benzene. However, this issue has been successfully addressed in DWPF process vessels where the hydrogen and benzene evolution rates are much larger than would be the case for this process (several of the DWPF Salt Process Cell vessels contain liquid benzene mixtures). The success of the DWPF strategy in addressing the vapor space flammability safety issue rests on two key points. The first key is demonstrate that the vessel can be inerted with a very high degree of reliability. The use of small process vessels which can be effectively sealed accomplishes this goal (vs. the use of a waste tank with large air inleakage rates). The second key is to provide a building structure and ventilation system that could withstand a vessel explosion. This allows an AB to be constructed that does not require 100% assurance that no flammable mixture of any size would ever form in the tank vapor space. Potentially, due to the relatively low off-site doses associated with precipitate, the building structure and ventilation system may only have to safety significant (vs. safety class).

INCLUDED UNDER PON 8

Advantages: The proposed process alternative would have both process and safety advantages. Each of these areas are discussed below.

The use of multiple small process vessels would facilitate both improved mixing and cooling of the precipitate slurry. Improved mixing would minimize process time and increase the efficiency of the precipitation reaction. This mixing could be achieved with standard engineering technology due to the reduced batch volume. Improved cooling of the slurry would increase the time period prior to which precipitate decomposition reactions would commence (e.g. increase the reaction incubation period) and decrease the decomposition rate after this time period. The vessels could be constructed of stainless steel so as to allow the product to be delivered directly to DWPF; this would remove the need for the current Late Wash Facility. The use of small batches would eliminate the storage of precipitate over extended time periods, hence reducing the potential for significant precipitate degradation. This arrangement would also reduce heel size thus decreasing the effective precipitate residence time.

As discussed in the preceding section, the use of small vessels which can be reliably inerted along with a robust building structure and ventilation system has proven to be an effective AB strategy with respect to safety. With respect to worker safety and environmental impact, the proposed arrangement would decrease worker exposure and reduce the potential for surface leaks and spills.

Disadvantages: There are two disadvantages to the proposed process alternative. The first is that a new facility would have to be constructed. It is possible that an existing facility could be used for this purpose with modifications and additions. Specifically, since it would no longer be required, the Late Wash Facility could potentially form the core of the new precipitation process facility.

The second is that an unanticipated DWPF outage could result in an unfiltered precipitate batch undergoing an unacceptably large degree of precipitate decomposition (filtered batches could still be transferred directly to DWPF). This may be acceptable since unanticipated DWPF outages would not occur frequently and the batch could be recovered by re-precipitation. Alternatively, a catalytic agent precipitation/ filtration step could be employed to decrease the potential for precipitate decomposition.

HLW SALT DISPOSITION PROCESS ALTERNATIVES

Alternative #: PON 16 Sponsor: James Brooke Date: 27 March, 1998

Originator: James Brooke Phone #: 5-8168

Title: Himsley multi-stage, fluidized-bed, counter-current solid-liquid contactor for continuous removal of Cesium from turbid salt solution using an ion exchanger and also using Power Fluidic devices for feed tank blending, salt solution transfer and sampling, and transfer of loaded ion exchanger to a sludge waste tank.

Description: The Himsley contactor is an excellent machine for conducting Cs ion exchange using a solid ion exchanger. No fine filtering is required on the feed salt solution. The unit can have an elution system added, if an elutable ion-exchanger is used.

Technical Maturity: At least one similar application has operated commercially removing ppm levels of Uranium from a trubid acidic leach solution. A complete testing and demonstration program should be done to obtain plant design parameters and to reduce the risk on success to a low level. The Power Fluidic devices are demonstrated in many, similar commercial nuclear operations. Most of the candidate ion-exchangers have no record of commercial manufacture or use in similar applications.

Safety Issues: The most significant safety issue recognized at this time are the exposures and risks from equipment maintenance—ion exchange systems have numerous automatic valves and pumps that operate cyclically, plus dense-phase slurry transfers are required—pipe and valve plugging possible. Careful design is required for a successful system—this is not a common skill.

Advantages:

1. Eliminates hazardous organics , if an inorganic non-elutable resin is used
2. Eliminates Late Wash Facility ($9M/yr saving)
3. Cuts the volume of Saltstone by >20%, if an inorganic non-elutable resin is used
4. Returns 3 of 1.2M gallon waste tanks to tank farm operations (T49, T50, & T22)
5. Eliminates eleven (11) long-shaft vertical centrifugal pumps
6. Cuts nitrogen usage by 75-85%
7. Eliminates one reagent storage tank (STPB)

Disadvantages: A development & demonstration program (>$1M) must be done. The program must include determining how to obtain the Sr & Pu decontamination now accomplished by adding MST to the TPB precipitate.

1b Hybrid see EXH2

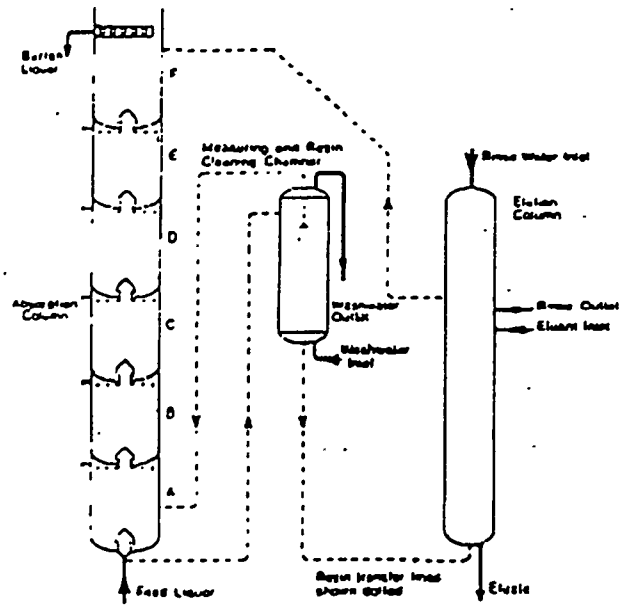

Fig.1. Diagrammatic Arrangement of Himsley Continuous Ion Exchange System

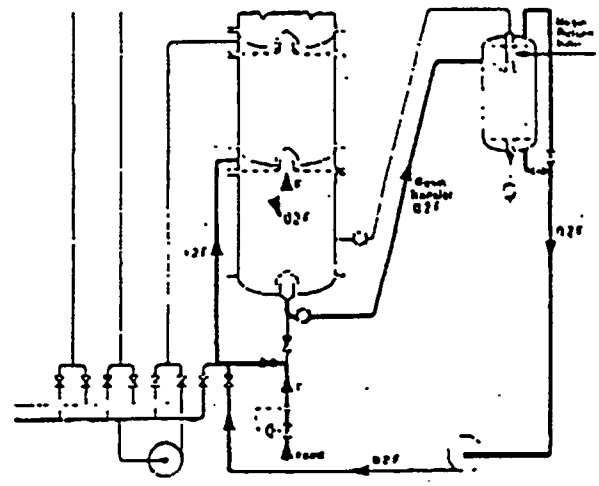

Fig.2. Resin Transfer to Measuring Chamber

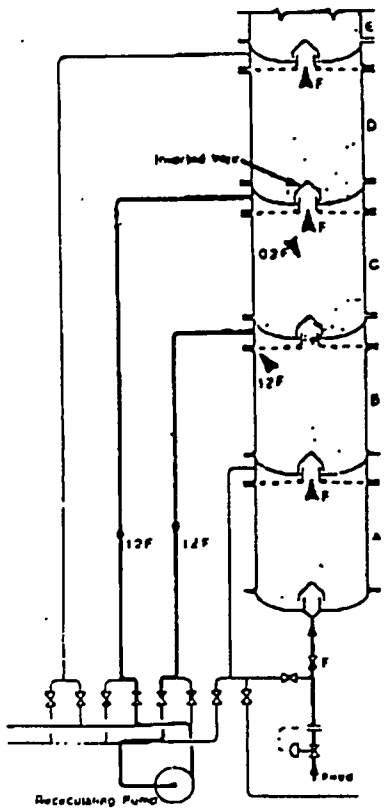

Fig. 3. Resin Transfer from Chamber C to B

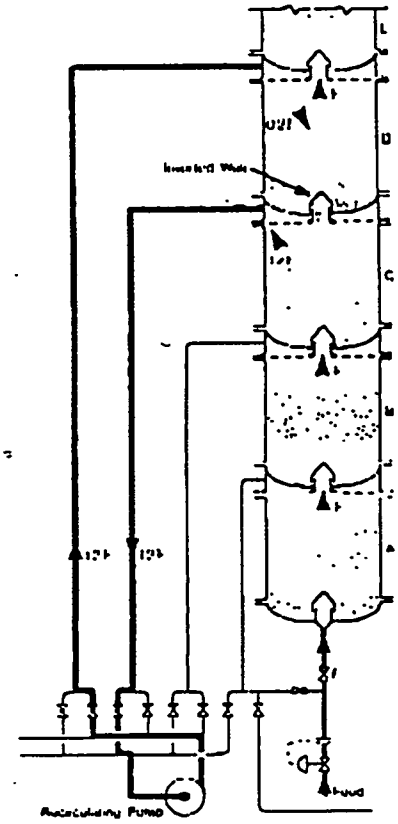

Fig. 4. Resin Transfer from Chamber D to C

ATTACHMENT 2

ATTACHMENT 2

Greg Rudy to James M. Owendoff letter dated March 16, 1998

DOE F 1325.8 (Rev 11-12-91)

United States Government — Department of Energy (DOE)

Memorandum

Savannah River Operations Office (SR)

DATE: MAR 16 1998

REPLY TO ATTN OF: AMHLW (Spader (803/208-7409)

SUBJECT: Program Plan for the Evaluation of High Level Waste (HLW) Salt Disposition Alternatives, (Your memo, 02/06/98)

To: James M. Owendoff, Acting Assistant Secretary for Environmental Management (EM-1), HQ

The purpose of this memorandum is to submit for your concurrence the DOE-SR Program Plan for the HLW Salt Disposition Alternatives Evaluation and team membership as directed by your memorandum dated February 6, 1998. The Plan addresses the following key elements:

1. Alternatives Evaluation Process Description
2. Attributes and selection criteria for the Savannah River Site (SRS) HLW Salt Disposition Systems Engineering (SE) Team
3. Interfaces and responsibilities for the SRS HLW Salt Disposition SE Team, DOE-SR and HQ
4. Preliminary Schedule
5. Charter for the SRS HLW Salt Disposition SE Team
6. Proposed team members for the SRS HLW Salt Disposition SE Team

Please note that all team members have been identified for the SRS HLW Salt Disposition SE Team with the exception of the outside chemical process member. The attached Plan identifies five potential candidates for this position and a final selection is expected to be made early this week.

The Plan has been reviewed in draft with EM-30 as directed in your February 6, 1998, memorandum and their comments have been incorporated. It is understood that you will establish the Independent Project Evaluation Team, therefore, the subject Plan does not include this charter or identify team members.

In order to meet the aggressive schedule identified in the Plan, activities of the SRS HLW Salt Disposition SE Team and DOE-SR will continue in parallel with your review and concurrence.

Should you or your staff have any questions, please contact me or Roy Schepens at (803) 208-6072.

Greg Rudy
Acting Manager

Attachment:
Program Plan

Concur: _____ Date: _____
James M. Owendoff, Acting EM-1

Nonconcur: _____ Date: _____
James M. Owendoff, Acting EM-1

PC-98-0029

cc w/attach:
R. E. Erickson, EM-32, HQ
M. Frei, EM-30, HQ
E. A. Livingston, EM-20, HQ

Program Plan
for
HLW Salt Disposition Alternatives Evaluation

I. Purpose

The purpose of this program plan is to identify the actions necessary to provide a structured and comprehensive evaluation and validation of alternatives for the disposition of High Level Waste (HLW) salt solutions at the Savannah River Site (SRS). The current method of processing HLW salt solutions at SRS is through a precipitation process at the In-Tank Precipitation (ITP) facility. As described below, startup activities for ITP have been suspended, pending a comprehensive review of salt disposition alternatives, due to the inability of ITP to cost effectively meet the safety and production objectives for processing HLW salt solutions as currently configured. This plan briefly discusses why an alternatives evaluation is needed, describes how the evaluation will be conducted, describes the planned oversight and validation of the evaluation, identifies the team attributes and selection criteria, and provides a preliminary schedule of key program activities. A summary of the alternatives evaluation program is provided in Attachment A, "ITP Project Management Process."

II. Background

The ITP facility initiated radioactive operation in September 1995 to remove cesium and other radioactive components from Tank Farm waste salt solutions. During slurry pump operation in December 1995, benzene was evolved from Tank 48H at higher rates than expected. Subsequent investigations revealed the source of benzene was decomposition of sodium tetraphenylborate (TPB) that had been added to precipitate cesium from the waste solution. ITP operations were suspended in March 1996 to develop an improved understanding of the ITP process chemistry and evaluate any impacts on down stream facilities.

An ITP chemistry test program was undertaken and results determined that TPB breaks down into intermediate products, producing benzene as each product decomposes, with certain sludge components accelerating the decomposition reaction. In January 1998, conclusions drawn from test results indicated that benzene generated from decomposition reactions would cause benzene release rates to exceed the capacity of current plant hardware/systems. It was also determined that potassium and cesium TPB (the principal ITP

process product) could also decompose rapidly under certain conditions, requiring re-precipitation several times during processing in Tank 48, and as often as monthly in Tank 49, leading to extended cycle times. The Westinghouse Savannah River Company (WSRC) informed DOE in a letter (Reference 1) on January 22, 1998, that ITP chemistry testing demonstrated that the present system configuration could not cost effectively meet the safety and production requirements for the ITP facility, and recommended that a study of alternatives to the current system configuration be conducted by a systems engineering team.

DOE-SR reviewed the data from the ITP Chemistry Program and concurred with the WSRC analysis. With a series of briefings and discussions, DOE-SR informed DOE-HQ and the Defense Nuclear Facility Safety Board (DNFSB) of the conclusions reached from the chemistry program and the recommendation for an alternatives evaluation. DOE-SR formally notified DOE-HQ of the conclusions and requested concurrence on the plan of action for suspension of restart activities in a memorandum dated January 27, 1998 (Reference 2). The DOE Assistant Secretary for Environmental Management (EM-1) issued a memorandum (Reference 3) on February 6, 1998, approving the plan of action for suspension of activities at ITP with certain conditions, including submission of a plan and preliminary schedule for the alternatives evaluation by March 15, 1998. DOE-SR subsequently issued a letter (Reference 4) to WSRC on February 20, 1998, concurring formally with the WSRC evaluation of the chemistry data and with conclusions regarding ITP process efficiency and viability as currently configured. WSRC was instructed to suspend ITP startup preparations and perform an evaluation of alternatives to the current system configuration related to HLW salt removal, treatment and disposal.

III. Alternatives Evaluation Process

A. Systems Engineering Team

A WSRC team, reporting to the HLW Vice President and General Manager, has been chartered to perform a formal structured evaluation of salt disposition alternatives using a formal systems engineering approach. This team is known as the "SRS HLW Salt Disposition Systems Engineering (SE) Team", and will be hereafter referred to as the "SE Team". The SE Team will consist of a WSRC team leader and full-time membership in the areas of Operations, Engineering, Science and Safety. Non-WSRC full-time or part-time support will be utilized for Systems Engineering, Chemical Processing, Waste Processing and National Laboratory research expertise. EM-1 will concur in the selection of SE Team members.

The SE Team will review applications of various salt disposition technologies including, but not limited to, ion exchange and variants of the precipitation process, with consideration given to long-term operational impacts on HLW tank space A list of salt disposition alternatives will be generated by the SE Team using DOE complex experience, chemical processing experience, academia and laboratory studies The evaluation of alternatives will include assessment of technology feasibility and maturity, life cycle costs, and programmatic risk. Risk analysis will include impacts to other SRS facilities and missions. Criteria will be developed and a screening process will be used to evaluate each of the alternatives. System functions and requirements will be established for each proposed alternative, and it will be demonstrated that each of the alternatives meets these functions and requirements.

Alternatives not meeting identified requirements without substantial risk or modification will be dropped from consideration and the bases documented. The functions and requirements, coupled with Engineering and Operations assessments, will be used to identify work process hazards and other safety hazards to ensure process complexity is evaluated as part of programmatic risk.

The Integrated Safety Management System and procedure hierarchy will govern the identification of worker hazards. Technical, cost, schedule and overall programmatic risks will be identified for each alternative under consideration with proposed options to minimize risks.

The SE Team will develop and issue final recommendations to WSRC based upon the outcome of the risk minimization options and system function and requirements validation. The recommended flow sheet(s) for the best salt disposition option will be provided with the final report. Following final alternative selection and approval, the SE Team will develop conceptual design requirements for the recommended alternative(s).

The SE Team will develop a System Engineering Management Plan (SEMP) which will provide details for implementation of the systems engineering approach discussed above. A detailed process for the development of a list of salt process alternatives, system functions, minimum requirements and key evaluation criteria, "short list" options, and options and recommendations for minimizing risks will also be included in the SEMP

A charter for the SE Team is provided in Attachment B, "Charter for the SRS HLW Salt Disposition Systems Engineering Team."

B. Independent Project Evaluation Team

The Independent Project Evaluation (IPE) Team reporting to EM-1 will provide independent oversight of the SE Team, provide periodic assessments of progress, and make an independent recommendation as to the best alternative(s). During the planning phase, the IPE Team will focus on the technical feasibility, programmatic risk, and expected performance of the proposed alternatives, as well as the schedule and cost of implementation. During the design, construction, and operating phases following selection of a path forward, the IPE Team may continue its independent oversight and evaluation of progress and, as appropriate, validate the technical, cost, and schedule baselines. During all phases, it is within the IPE Team's charter to perform independent analyses, and to offer peer advice and assistance to the SE Team, WSRC, DOE-SR and DOE-HQ/EM.

The IPE Team membership and charter will be developed by EM-1.

C. WSRC Support

WSRC will provide staff support to the SE Team as necessary for literature search, data gathering, data analysis, and other support activities during the alternative evaluation phase. The SE Team leader will have staff support in administrative, document recording and structured systems analysis as required. The SE Team members will have access to staff support and ad hoc membership for specific process/technical risk management evaluations. During the design/construction/startup phase, WSRC staff will develop the conceptual/final design, manage the construction/startup project, and develop the necessary cost estimates to support the project.

D. DOE Oversight

DOE-SR/HLW will review the final evaluation results and recommendation of the SE Team and provide a recommendation to the DOE-SR Manager. Upon concurrence the DOE-SR Manager will provide a recommendation to EM-1 for a preferred salt disposition alternative(s), and will provide a copy of the recommendation to the IPE Team. EM-1 with input from the IPE Team will concur on the final alternative(s) and pursue authorization of necessary resources to design and implement the alternative(s).

During the alternatives evaluation/selection phase, DOE-SR/HLW will provide technical oversight of the day-to-day activities of the SE Team, as well as the various support teams established by the SE Team. This will include attending meetings/discussions, reviewing screening criteria and the use of screening criteria, and the evaluation of alternative analysis.

During the design/construction/startup phase, DOE-SR/HLW will ensure the appropriate management of the selected alternative project activities in accordance with DOE Policy and Orders. Upon completion of all project activities, including any necessary Operational Readiness Reviews, DOE-SR will provide a recommendation for readiness to operate to EM-1.

During all phases of the alternatives evaluation process, DOE-SR/HLW will keep DOE-SR management informed of program status. DOE-SR/HLW will also work closely with DOE/HQ-EM personnel to keep them informed of the status of activities and to seek guidance/input as necessary. Likewise, the DNFSB staff will be informed routinely of the status of program activities.

DOE-SR will work with DOE-HQ/EM and other sites to ensure the results of the current and future studies of the ITP technology, along with the other lessons learned, is factored into other high level waste programs.

E. Interfaces

The team leader of the SE Team will maintain a flow of information to the team leader of the IPE Team as the alternatives evaluation progresses through each key phase of development (i.e., alternatives identification phase, "short" list identification phase, criteria development phase, preliminary risk assessment phase, etc.). The IPE Team will provide feedback to the SE Team when it appears that the planned system engineering approach is not being followed or when questions arise regarding specific actions the SE Team has or has not taken or information which is not fully understood.

Communication between the IPE Team, SE Team, DOE-SR, and DOE/HQ-EM will be in the form of written reports, formal and informal memoranda, teleconferences, or video conferences, as necessary. The DOE-SR/HLW staff will be the avenue and focal point for these interfaces. SE Team deliverables will be formally transmitted by DOE-SR to the IPE Team for review. DOE-SR/HLW personnel will communicate routinely with the SE Team and support staff, and will also communicate with the IPE Team, as needed, through the DOE ex-officio members. The ongoing status of the alternatives evaluation will be communicated to DOE-SR management through the regularly scheduled weekly

meetings and will be communicated to DOE/HQ-EM management through periodic program status update briefings.

IV. Design, Construction and Startup

Upon completion of final recommendation(s) and EM-1 concurrence on the preferred alternative, the design process becomes critical path to implementation of radioactive salt disposition. Once DOE concurrence to proceed with design is obtained, WSRC will translate the final recommendation(s) into a conceptual design. In parallel, efforts to establish appropriate funding and develop standard project implementation practices will begin.

V. Team Membership

A. System Engineering Team

The minimum SE Team will be composed of an experienced process engineer, a chemistry expert familiar with research and applied chemical processing, an experienced deterministic safety analysis representative and a operations representative. External personnel will be sought from academia, National Laboratory research and the chemical processing industry. Team members must be objective, open minded, and not predisposed to a single technology. Savannah River Technology Center personnel, consultants and the current ITP Flowsheet team will be used to support the SE Team, as necessary. Project Engineering and Construction, Finance and Planning & Scheduling will be utilized in support of programmatic and cost/schedule risk evaluation. Staff support will be available to the SE Team in the areas of administration, document recording, structured systems analysis, and process/technical risk management, as necessary.

VI. Preliminary Schedule

Mar 12	SE Team members selected
Mar 20	EM-1 Concurrence on the Plan and Team Membership for the Evaluation of HLW Salt Disposition Alternatives
Mar 26	System Engineering Management Plan Issued (including logic and duration schedule)
Apr 3	EM-1 Establishes the IPE Team
Apr 17	SE Team provide report summarizing the activities leading to an "initial list" of alternatives and screening criteria for the "short list"
May 18	SE Team provide report summarizing the activities leading to a "short list" of alternatives
May 18	Provide program progress report to DOE-HQ/EM including an update on Program and Budget impacts (offer a briefing to the DNFSB at this time)
May 22	SE Team develop detailed evaluation criteria and weighing factors for "short list" alternatives
Jun 5	SE Team complete preliminary technical risk assessment on the "short list" alternatives
Jun 22	Complete programmatic risk review and perform a detailed schedule review/mid-course correction (offer a briefing to the DNFSB at this time)
Aug 15	Complete preconceptual design and initial cost estimate
Sep 30	SE Team provide final report on all activities and preferred alternative(s) recommendation
Oct 15	DOE-SR Manager provide preferred alternative(s) recommendation to EM-1
Oct 19	IPE Team provide independent recommendation to EM-1
Oct 31	EM-1 Concurrence

Throughout this process the SE Team will provide periodic briefings and status updates to DOE, the IPE Team and the DNFSB through meetings and reports.

VII. Attachments

A. ITP Project Management Process (dated 3/16/98)
B. Charter for the SRS HLW Salt Disposition Systems Engineering Team (including List of SE Team Members), dated 3/13/98

VIII. References

1. Letter, Scott to Schepens, "In-Tank Precipitation (ITP) Test Results (U)", 1/22/98
2. Memorandum, Rudy to Alm, "Suspension of Activities at the In-Tank Precipitation (ITP) Facility", 1/27/98
3. Memorandum, Owendoff to Rudy, "Suspension of Activities at the In-Tank Precipitation Facility", 2/6/98
4. Letter, Schepens to Scott, "Suspension of Restart Activities at the In-Tank Precipitation (ITP) Facility", 2/20/98

ITP PROJECT MANAGEMENT PROCESS

5/.5/98

	PHASE I (6-9 Months) ALTERNATIVE IDENTIF/ SELECTION	PHASE 2 (1-6 Years) DESIGN/CONSTRUCTION/STARTUP	PHASE 3 ANNUAL OPERATIONS
WSRC Program and Project Implementation	•Provide staff support to Systems Engineering Team	•Develop Conceptual/Final Design •Manage/construct/startup Project •Develop ABC estimates •Follow applicable DOE Policy & Orders	•Annual Cost Validations
SRS HLW Salt Disposition Systems Engineering Team •WSRC Leadership and Internal Experts (4) •External Independent Experts (4) •Reports to WSRC VP/GM	•Alternative Evaluation - Develop screening criteria - Determine candidates to be analyzed - Analyze for cost, schedule, viability, etc. - Recommend Alternative(s) to DOE-SR (through WSRC VP/GM)	•Develop Conceptual Design requirements	
Independent Project Evaluation Team •External Independent Experts (6) •DOE-SR/HQ Ex Officio (2) •Cover Areas Identified by NRC Report •Reports to EM-1	•Independent oversight of Systems Engineering Team - Peer reviews parallel with Alternative Evaluation Process - Provide counter-proposals if necessary - Provide final recommendation to EM-1	•Review, comment & concur on Conceptual Design requirements Independently review Conceptual Design •Validate Project in accordance with DOE requirements and NRC report recommendations (adjust team members) •Annual Project Revalidation for SR-EM (graded approach)	
DOE-SR/HQ-EM Program Management	•DOE-SR/EM review results of System Engineering Team and Independent Project Evaluation Team and provide recommendation to EM-1 •EM-1 concur with proposed Alternative •Interact w/DNFSB •Share Lessons Learned	•Manage Project pursuant to DOE Policy & Orders •Provide Readiness to Operate recommendation to EM-1 •Interact w/DNFSB •Share Lessons Learned	•Cost Validations with external experts as required •Support budget development & defense •Interact w/DNFSB •Share Lessons Learned

ATTACHMENT A

ATTACHMENT B

CHARTER

FOR THE

SRS HLW SALT DISPOSITION SYSTEMS ENGINEERING TEAM

3/13/98

CHARTER

The SRS High Level Waste (HLW) Salt Disposition Systems Engineering Team is charged with the task of systematically developing and recommending an alternative method and/or technology for Disposition of HLW Salt. It has been determined that the currently configured ITP process cannot effectively meet both production and safety requirements, thus necessitating an alternative approach. The alternative selected for final recommendation will be capable of safely and cost effectively processing high level waste salt from SRS High Level Waste (HLW) tanks to permitted waste form(s).

Team participants will be selected based on their proven subject matter expertise, objectivity, open-mindedness and are not predisposed to a single technology. The Team members should have other human resources available to them from their parent organization in order to facilitate the completion of assigned action items, research, report writing, etc. relevant to the Team charter. The existing SRTC Chemistry Team and ITP Flow Sheet Team will be utilized as required. A synopsis of candidate attributes, beyond those stated above, are provided in Attachment 1.

Further, the Team is to follow the Systems Engineering (SE) approach in developing a preferred alternative. The SE approach has proven effective both at SRS and elsewhere when solving a large and/or technically complex problem such as we have before us. The SE approach starts with defining the "top down" functions and requirements any solution must meet including an assessment of need. The other salient features of this process include the definition of external interfaces, brainstorming alternatives, risk management and developing screening criteria, e.g. boundary conditions against which alternatives can be objectively evaluated for viability. The critical needs and minimum boundary conditions/constraints that all alternatives should be evaluated against are shown in Attachment 2. The Team will develop and work to a detailed System Engineering Management Plan.

The deliverables provided by the Team are divided into three phases in order to allow transmittal of information to both internal and external review teams for feedback and concurrence purposes. The major milestones required of the Team are listed in Attachment 3.

Completion of the HLW Salt Disposition Systems Engineering team report on the preconceptual design of the preferred alternative meets the ITP Project Management Process alternative selection requirements.

Once DOE concurrence to proceed with design is obtained, the Team will initiate design, construction and startup phase of the ITP Project Management Process by developing the Conceptual Design Requirements. In parallel, efforts to establish appropriate funding and develop standard implementation practices will begin.

ATTACHMENT 1

HLW S.D. Systems Engineering Attributes

General Team Attributes:

- Recognized Expertise in their field
- Several members must have prior Systems Engineering Analysis Experience
- Good communication skills
- Assertive, but not overly
- Available for duration of study
- Must be objective, open minded and not predisposed to a single technology.

WSRC

General WSRC Member Attributes

- Knowledgeable of the SRS High Level Waste Facilities to ensure that interfaces with the HLW Systems are considered.

Team Leader Attributes:

- Extensive Experience in:
  - Chemical facility operations, maintenance, engineering, and projects, preferably in radiochemical facilities.
  - Plant operability and maintainability evaluations
  - Programmatic and technical risk determinations
  - Complex process decision making

Operations Member Attributes:

- Extensive Experience in:
  - Chemical facility operations, maintenance and engineering, preferably in radiochemical facilities.
  - Plant operability and maintainability evaluations
  - Programmatic risk determinations

Process Engineering Member Attributes:

- Extensive Experience in:
  - Chemical facility operations, maintenance and engineering, preferably in radiochemical facilities.
  - Plant operability and maintainability evaluations
  - Programmatic risk determinations
  - Knowledgeable of SRS HLW SAR and TSR requirements

Science Member Attributes:

- Extensive Experience in:
  - Chemical facility and process development, preferably in radiochemical facilities.
  - Strong chemical, nuclear and experimental technical Expertise
  - Technical risk determinations

Safety & Regulatory Engineering Member Attributes

- Extensive Experience in:
  - Deterministic Safety Analysis
  - Authorization Basis requirements
  - High Level Waste Regulatory requirements
  - Programmatic and technical risk determinations

Non-WSRC Members

General Non-WSRC Member Attributes

- Broad Varied Experience that would complement WSRC Team Members.

Waste Process Member Attributes:

- Extensive Experience in:
  - Chemical facility operations, maintenance and engineering, preferably in radiochemical facilities.
  - Plant operability and maintainability evaluations
  - Programmatic risk determinations

Chemical Process Member Attributes:

- Extensive Experience in:
  - Chemical facility operations, maintenance and engineering, preferably in radiochemical facilities.
  - Plant operability and maintainability evaluations
  - Programmatic and technical risk determinations

Science Member Attributes:

- Extensive Experience in:
  - Chemical facility and process development, preferably in radiochemical facilities.
  - Strong chemical, nuclear and experimental technical Expertise
  - Technical risk determinations
  - Preferably associated with a National Laboratory

Systems Engineering Analysis Member Attributes

- Extensive Experience in:
  - Leading Systems Engineering Analysis evaluations
- Could be staffed by WSRC or non-WSRC member

NOTE: Overall membership of the HLW Salt Disposition Systems Engineering Team will cover the above attributes, however, individual members may cover portions of the attributes in more than one topical area.

ATTACHMENT 2

MINIMUM CRITICAL NEEDS, BOUNDARY CONDITIONS AND CONSTRAINTS ALTERNATIVES MUST MEET.

Critical Needs

- shall meet all applicable safety criteria for protection of personnel
- shall meet all applicable environmental regulations
- all waste must go to final disposal forms
- shall meet FFA and Site Treatment Plan Regulatory commitments
- shall accommodate other SRS missions and associated schedules
- shall meet all applicable final disposal product quality requirements
- shall meet all applicable waste acceptance criteria

Boundary/Constraints

- Functions & Requirements (preliminary design input)
- safety of the process
- impact to HLW final waste form disposition
- programmatic/technical risk
- cost (project and life cycle)/schedule
- regulatory/safety/permit acceptability
- operational complexity
- ability to support currently planned future SRS missions and schedules
- maximum tank farm space kept available
- use of existing facilities
- constructability
- Reliability, Availability, Maintainability, and Inspectability (RAMI)

ATTACHMENT 3

HLW SALT DISPOSITION SYSTEMS ENGINEERING TEAM MAJOR MILESTONES

PHASE	DELIVERABLE	DATE
I	• Team Selection	3/12/98
	• Systems Engineering Management Plan	3/26/98
	• Report summarizing the activities leading to an "initial list" of alternatives and screening criteria for the short list	4/17/98
II	• Report summarizing the activities leading to a "short list" of alternatives	5/18/98
	• Program Progress Report to DOE HQ	5/18/98
	• Develop detailed evaluation criteria weighting factors	5/22/98
	• Complete a preliminary Technical Risk Analysis on the short list alternatives	6/5/98
	• Complete Programmatic Risk Review and perform a detailed schedule review/mid course correction	6/22/98
III	• Complete preconceptual* design and initial cost estimate	8/15/98
	• Provide final report on all activities and preferred alternative recommendation	9/30/98

*Preconceptual design includes configuration controlled design input, e.g. Chapter I of a facility design description (FDD) and key features of the preferred alternative. A Flow Sheet or Process Diagram will be included. Details of design will not be developed during preconceptual activities.

NOTE: Throughout this process the HLW Salt Disposition System Engineering Team will provide periodic briefings and status updates to the DOE, Independent Project Evaluation Team, and the DNFSB via meetings and reports.

TEAM MEMBERS

TEAM LEADER	--	STEVE PICCOLO (WSRC PROGRAM MANAGEMENT)
OPERATIONS MEMBER	--	JEFF BARNES (WSRC HLW ENGINEERING/OPS)
PROCESS ENGINEERING MEMBER	--	KEN REUTER (WSRC PROJECTS ENGINEERING/ CONSTRUCTION DEPT.)
SCIENCE MEMBER	--	LOU PAPOUCHADO (WSRC SAVANNAH RIVER TECHNOLOGY CENTER)
SAFETY & REGULATORY ENGINEERING MEMBER	--	JOHN CARLSON (WESTINGHOUSE SAFETY MANAGEMENT SOLUTIONS)
SYSTEMS ENGINEERING MEMBER	--	GARY ABELL (WSRC PROJECTS ENGINEERING & CONSTRUCTION DEPT.
WASTE PROCESSING MEMBER	--	PETER HUTSON (BNFL)
OUTSIDE SCIENCE MEMBERS	--	DR. EDWARD CUSSLER (UNIVERSITY OF WISCONSIN)
	--	DR. JACK WATSON (OAK RIDGE)
OUTSIDE CHEMICAL PROCESS	--	TBD CANDIDATES INCLUDE: GEORGE JANSER,JR. - HANFORD JIM HONEYMAN - HANFORD OWEN MATHE - DUPONT GILBERT SLOAN - DUPONT ED LAHODA - WESTINGHOUSE

ATTACHMENT 3

Charter for the SRS High Level Waste Salt Disposition Systems Engineering Team

ATTACHMENT 3

Westinghouse
Savannah River Company
Aiken, SC 29808

MAR 13 1998

HLW-OVP-98-0020

Mr. Roy J. Schepens, Acting Assistant Manager
High Level Waste
U. S Department of Energy
Savannah River Operations Office
P. O. Box A
Aiken, SC 29802

Dear Mr. Schepens:

HLW SALT DISPOSITION SYSTEMS ENGINEERING TEAM CHARTER (U)

The purpose of this letter is to transmit the HLW Salt Disposition Systems Engineering Team Charter (Attachment 1) for your concurrence. All members have been identified with the exception of the outside chemical process member. Attachment 2 provides the list of selected team members. I expect to confirm the availability of the proposed chemical process member by March 16, 1998. The preferred candidate is Mr. Honeyman from Hanford. Biographies on the team members will be provided under a separate transmittal.

Please provide any comments or concurrence to myself (ext. 8-3250) or Steve F. Piccolo (ext. 8-0013) of my staff.

Sincerely,

A. B. Scott, Jr.
Vice President and General Manager
High Level Waste Management Division

ABS:SFP/lss

Attachments

cc: H. F. Herrera, 703-H
S. F. Piccolo, 704-56H

ATTACHMENT 1

CHARTER

FOR THE

SRS HLW SALT DISPOSITION SYSTEMS ENGINEERING TEAM

Approved by: _____ _____

A. B. Scott, Jr., WSRC — Date

Vice President & General Manager

HLWM Division

CHARTER

The SRS High Level Waste (HLW) Salt Disposition Systems Engineering Team is charged with the task of systematically developing and recommending an alternative method and/or technology for Disposition of HLW Salt. It has been determined that the currently configured ITP process cannot effectively meet both production and safety requirements, thus necessitating an alternative approach. The alternative selected for final recommendation will be capable of safely and cost effectively processing high level waste salt from SRS High Level Waste (HLW) tanks to permitted waste form(s).

Team participants will be selected based on their proven subject matter expertise, objectivity, open-mindedness and are not predisposed to a single technology. The Team members should have other human resources available to them from their parent organization in order to facilitate the completion of assigned action items, research, report writing, etc. relevant to the Team charter. The existing SRTC Chemistry Team and ITP Flow Sheet Team will be utilized as required. A synopsis of candidate attributes, beyond those stated above, are provided in Attachment 1.

Further, the Team is to follow the Systems Engineering (SE) approach in developing a preferred alternative. The SE approach has proven effective both at SRS and elsewhere when solving a large and/or technically complex problem such as we have before us. The SE approach starts with defining the "top down" functions and requirements any solution must meet including an assessment of need. The other salient features of this process include the definition of external interfaces, brainstorming alternatives, risk management and developing screening criteria, e.g: boundary conditions against which alternatives can be objectively evaluated for viability. The critical needs and minimum boundary conditions/constraints that all alternatives should be evaluated against are shown in Attachment 2. The Team will develop and work to a detailed System Engineering Management Plan.

The deliverables provided by the Team are divided into three phases in order to allow transmittal of information to both internal and external review teams for feedback and concurrence purposes. The major milestones required of the Team are listed in Attachment 3.

Completion of the HLW Salt Disposition Systems Engineering team report on the preconceptual design of the preferred alternative meets the ITP Project Management Process alternative selection requirements.

Once DOE concurrence to proceed with design is obtained, the Team will initiate design, construction and startup phase of the ITP Project Management Process by developing the Conceptual Design Requirements. In parallel, efforts to establish appropriate funding and develop standard implementation practices will begin.

ATTACHMENT 1

HLW S.D. Systems Engineering Attributes

General Team Attributes:

- Recognized Expertise in their field
- Several members must have prior Systems Engineering Analysis Experience
- Good communication skills
- Assertive, but not overly
- Available for duration of study
- Must be objective, open minded and not predisposed to a single technology.

WSRC

General WSRC Member Attributes

- Knowledgeable of the SRS High Level Waste Facilities to ensure that interfaces with the HLW Systems are considered.

Team Leader Attributes:

- Extensive Experience in:
  - Chemical facility operations, maintenance, engineering, and projects, preferably in radiochemical facilities.
  - Plant operability and maintainability evaluations
  - Programmatic and technical risk determinations
  - Complex process decision making

Operations Member Attributes:

- Extensive Experience in:
  - Chemical facility operations, maintenance and engineering, preferably in radiochemical facilities.
  - Plant operability and maintainability evaluations
  - Programmatic risk determinations

Process Engineering Member Attributes:

- Extensive Experience in:
  - Chemical facility operations, maintenance and engineering, preferably in radiochemical facilities.
  - Plant operability and maintainability evaluations
  - Programmatic risk determinations
  - Knowledgeable of SRS HLW SAR and TSR requirements

Science Member Attributes:

- Extensive Experience in:
  - Chemical facility and process development, preferably in radiochemical facilities.
  - Strong chemical, nuclear and experimental technical Expertise
  - Technical risk determinations

Safety & Regulatory Engineering Member Attributes

- Extensive Experience in:
  - Deterministic Safety Analysis
  - Authorization Basis requirements
  - High Level Waste Regulatory requirements
  - Programmatic and technical risk determinations

Non-WSRC Members

General Non-WSRC Member Attributes

- Broad Varied Experience that would complement WSRC Team Members.

Waste Process Member Attributes:

- Extensive Experience in:
  - Chemical facility operations, maintenance and engineering, preferably in radiochemical facilities.
  - Plant operability and maintainability evaluations
  - Programmatic risk determinations

Chemical Process Member Attributes:

- Extensive Experience in:
  - Chemical facility operations, maintenance and engineering, preferably in radiochemical facilities.
  - Plant operability and maintainability evaluations
  - Programmatic and technical risk determinations

Science Member Attributes:

- Extensive Experience in:
  - Chemical facility and process development, preferably in radiochemical facilities.
  - Strong chemical, nuclear and experimental technical Expertise
  - Technical risk determinations
  - Preferably associated with a National Laboratory

Systems Engineering Analysis Member Attributes

- Extensive Experience in:
  - Leading Systems Engineering Analysis evaluations
- Could be staffed by WSRC or non-WSRC member

NOTE: Overall membership of the HLW Salt Disposition Systems Engineering Team will cover the above attributes, however, individual members may cover portions of the attributes in more than one topical area.

ATTACHMENT 2

MINIMUM CRITICAL NEEDS, BOUNDARY CONDITIONS AND CONSTRAINTS ALTERNATIVES MUST MEET.

Critical Needs

- shall meet all applicable safety criteria for protection of personnel
- shall meet all applicable environmental regulations
- all waste must go to final disposal forms
- shall meet FFA and Site Treatment Plan Regulatory commitments
- shall accommodate other SRS missions and associated schedules
- shall meet all applicable final disposal product quality requirements
- shall meet all applicable waste acceptance criteria

Boundary/Constraints

- Functions & Requirements (preliminary design input)
- safety of the process
- impact to HLW final waste form disposition
- programmatic/technical risk
- cost (project and life cycle)/schedule
- regulatory/safety/permit acceptability
- operational complexity
- ability to support currently planned future SRS missions and schedules
- maximum tank farm space kept available
- use of existing facilities
- constructability
- Reliability, Availability, Maintainability, and Inspectability (RAMI)

ATTACHMENT 2

TEAM MEMBERS

TEAM LEADER	–	STEVE PICCOLO
OPERATIONS MEMBER	–	JEFF BARNES
PROCESS ENGINEERING MEMBER	–	KEN REUTER
SCIENCE MEMBER	–	LOU PAPOUCHADO
SAFETY & REGULATORY ENGINEERING MEMBER	–	JOHN CARLSON
SYSTEMS ENGINEERING MEMBER	–	GARY ABELL
WASTE PROCESSING MEMBER	–	PETER HUTSON (BNFL)
OUTSIDE SCIENCE MEMBERS	–	DR. EDWARD CUSSLER (UNIVERSITY OF WISCONSIN)
	–	DR. JACK WATSON (OAK RIDGE)
OUTSIDE CHEMICAL PROCESS	–	TBD

ATTACHMENT 3

HLW SALT DISPOSITION SYSTEMS ENGINEERING TEAM MAJOR MILESTONES

PHASE	DELIVERABLE	DATE
I	• Team Selection	3/12/98
	• Systems Engineering Management Plan	3/26/98
	• Report summarizing the activities leading to an "initial list" of alternatives and screening criteria for the short list	4/17/98
II	• Report summarizing the activities leading to a "short list" of alternatives	5/18/98
	• Program Progress Report to DOE HQ	5/18/98
	• Develop detailed evaluation criteria weighting factors	5/22/98
	• Complete a preliminary Technical Risk Analysis on the short list alternatives	6/5/98
	• Complete Programmatic Risk Review and perform a detailed schedule review/mid course correction	6/22/98
III	• Complete preconceptual* design and initial cost estimate	8/15/98
	• Provide final report on all activities and preferred alternative recommendation	9/30/98

*Preconceptual design includes configuration controlled design input, e.g. Chapter I of a facility design description (FDD) and key features of the preferred alternative. A Flow Sheet or Process Diagram will be included. Details of design will not be developed during preconceptual activities.

NOTE: Throughout this process the HLW Salt Disposition System Engineering Team will provide periodic briefings and status updates to the DOE, Independent Project Evaluation Team, and the DNFSB via meetings and reports.

ATTACHMENT 4

Candidate Selections for the HLW Salt Disposition Systems Engineering Team

ATTACHMENT 4

CANDIDATE SELECTIONS

FOR

THE HLW SALT DISPOSITION SYSTEMS ENGINEERING TEAM

REVISION 0
March 25, 1998

Submitted by: _____ 3/26/98
Steve Piccolo, WSRC **Date**
Team Leader

Approved by: _____ 3-31-98
Austin Scott, WSRC **Date**
Vice President & General Manager
HLWM Division

INTRODUCTION

Westinghouse Savannah River Company (WSRC) made the recommendation to the Department of Energy (DOE) (reference 1) that alternative technology and/or methods to the In Tank Precipitation (ITP) Process be pursued. The basis for the recommendation is that the currently configured ITP process cannot meet both the flow sheet performance requirements and safety requirements simultaneously, as is needed to remove high level waste (HLW) salt from the SRS storage tanks to meet site missions.

As a result, WSRC has defined the type, quantity and level of expertise necessary to participate on the HLW Salt Disposition Systems Engineering Team.

PURPOSE

The purpose of this document is to identify the key attributes required of the Core SRS High Level Waste Salt Disposition Systems Engineering Team members, the areas of expertise desired, and the names/biographies of the individuals selected to be on the SRS Team.

This document may be updated as Team membership needs change or general information about Team members is requested.

TEAM CHARTER

The Team Charter is defined in the "Charter for the SRS High Level Waste Salt Disposition Systems Engineering Team" dated March 13, 1998, (reference 2) and approved by the Vice President and General Manager of the High Level Waste Management Division.

TEAM MEMBER ATTRIBUTES

The attributes required of Team members are listed in Attachment 1. First and foremost, all Team members selected were screened with respect to any predisposition to a single preferred technology or alternative. In order for the Team to be successful, an open minded and objective approach to ideas is paramount. The selected Team members are considered to possess the necessary objectivity to carry out the Team Charter.

The Team members, area of expertise, and company affiliation are listed below. Individual biography summaries are provided in Attachment 2.

If further information is required, please contact Mr. Steve Piccolo, of my staff, at 803-208-0013 (beeper #13695).

NAME	AREA OF CONTRIBUTION	COMPANY AFFILIATION
Steve Piccolo	Team Leader	WSRC
Gary Abell	Systems Engineering	WSRC
Ken Rueter	Process Engineering	WSRC
Jeff Barnes	Operations	WSRC
Peter Hudson	Waste Process	BNFL
Lucien Papouchado	Science	WSRC
John Carlson	Safety and Regulatory Engineering	WSMS
Jack Watson	Science	(ORNL)
Ed Cussler	Chemical	Academia
Gene Kosiancic	Chemical Process	Hanford

REFERENCES

Reference 1: Letter from Scott to Schepens dated January 22, 1998

Reference 2: Team Charter dated March 13, 1998

Reference 3: Letter from Rudy to Owendoff March 16, 1995

Reference 4: Program Plan for HLW Salt Disposition Alternatives Evaluation

TEAM MEMBERS

TEAM LEADER	--	STEVE PICCOLO (WSRC PROGRAM MANAGEMENT)
OPERATIONS MEMBER	--	JEFF BARNES (WSRC HLW ENGINEERING/OPS)
PROCESS ENGINEERING MEMBER	--	KEN RUETER (WSRC PROJECTS ENGINEERING/ CONSTRUCTION DEPT.)
SCIENCE MEMBER	--	LOU PAPOUCHADO (WSRC SAVANNAH RIVER TECHNOLOGY CENTER)
SAFETY & REGULATORY ENGINEERING MEMBER	--	JOHN CARLSON (WESTINGHOUSE SAFETY MANAGEMENT SOLUTIONS)
SYSTEMS ENGINEERING MEMBER	--	GARY ABELL (WSRC PROJECTS ENGINEERING & CONSTRUCTION DEPT.
WASTE PROCESSING MEMBER	--	PETER HUDSON (BNFL SAVANNAH RIVER CORPORATION)
OUTSIDE SCIENCE MEMBERS	--	DR. EDWARD CUSSLER (UNIVERSITY OF MINNESOTA)
	--	DR. JACK WATSON (OAK RIDGE)
OUTSIDE CHEMICAL PROCESS	--	GENE KOSIANCIC (HANFORD)

S. F. Piccolo

Westinghouse Savannah River Company
Team Expertise: Team Leader

Mr. Piccolo holds a BS in Mechanical Engineering and Applied Mechanics and MLS in Multy-disciplinary Technology Management. He is the Area Manager for the Waste Pretreatment Facilities at the Savannah River Site. His background spans commercial nuclear and fossil power generation, government chemical and reactor facilities and industrial manufacturing. Additionally his discipline set spans education and training, operations, startup, engineering, project management, construction and consulting.

Some key positions held in the last 15 years which demonstrate programmatic risk assessment, process hazard control, complex decision making and ability to recover facilities in trouble are as follows:

- Startup Manager for Detroit Edison's Fermi 2 Facility
- Restart Program Manager for Toledo Edison's Davis Besse Facility
- Restart Test Program Management Advisor for TVAs Sequoyah, Watts Bar and Browns Ferry Facilities
- Performance and Reactor Engineering Director - Toledo Edison's Davis Besse Facility
- Restart Test Manager for K Reactor (SRS)
- Engineering Director for Toledo Edison's Davis Besse Facility
- Corporate Education Center Director for Eastern Michigan University
- Principal Officer for Application Consultants for Technology
- Engineering Director for Defense Waste Processing Facility (DWPF), Saltstone and Late Wash (SRS - complex chemical facility)
- Start-up Manager for DWPF (SRS)
- Project Manager/Startup and Operations Manager - Bechtel Eastern Power Corp.

Some key consulting/advisory assignments:

- Delaware Research Partnership Development of Chemical Cleaning Technologies
- Eastern Michigan University Corporate Training for Chemical Hazard (General Motors) and Health/Safety (Ford Motor Co.)
- Toledo Edison's Engineering Director (Advisor)
- Rochester Gas and Electric Company's Engineering Director and Licensing Manager (Advisor)
- Company Nuclear Review Board Member Toledo Edison

For twenty-five years Mr. Piccolo has been dealing with new construction, one of a kind facilities, operating facilities, or recovery from shutdown facilities.

Mr. Piccolo has written multiple publications concerning management of facility operations, engineering assessment methods and project management.

Jeffrey L. Barnes

Westinghouse Savannah River Company
Team Expertise: Operations

Mr. Barnes holds a BS in Mechanical Engineering Technology and an Engineer-in-Training certification. He is the Deputy Engineering Manager for the Waste Pretreatment Facilities at the Savannah River Site. His background includes: operation, radio-chemistry controls, and radiological practices in the U.S. Navy nuclear power program; operations, maintenance, outage management and testing of government radiochemical and commercial power facilities.

He was a senior member of the Stone and Webster team responsible for operational and maintenance assessments called Advisory Operations. Some key Advisory Operations assignments are as follows:

- Surveillance testing and predictive maintenance programs operational interfaces at Toledo Edison's Davis Besse Facility
- Project team interfaces with operation and start-up, implementing tools development (P&IDs, scoped drawings and procedures) and operational systems review at Duquesne Lighting's Beaver Valley Facility
- Project team interfaces with operation, maintenance, and start-up, implementing tools development (P&IDs, scoped drawings, instrument loop diagrams, electrical loop diagrams and procedures) and operator system training at Northeast Utilities Millstone Facility
- Project team interfaces with Operations and Startup, Hot Functional retest strategy and Operation Readiness Assessment for fuel load at Texas Utilities' Commanche Peak Facility

Other Government Experience Includes:

- Startup Manager for Defense Waste Processing Facility (DWPF) (SRS)
- Deputy Operations Manager for DWPF (SRS)
- HLW Division Test Engineering Manager (SRS)
- Deputy Engineering Manager for Waste Pre-Treatment Department (WPT) (SRS)

Ken Rueter

Westinghouse Savannah River Company
Team Expertise: Process Engineering

Mr. Rueter holds a B.Sc. in Chemical Engineering from Cleveland State University. He is manager of the DWPF Process Control Engineering Group at the Savannah River Site. His past ten years has been focused totally towards Waste Management specifically in the area of nuclear and chemical waste processing. The majority of his career has involved advanced process technology design and commissioning. He is responsible for the design, implementation, and support of the DWPF process control strategy, solution and software. He was principally dedicated to the hazards and operability reviews of the DWPF Process Control System in order to ensure Human Factors performance standards and Authorization Basis requirements were maintained relative to the control system. He is participating as part of the NRC sponsored team for the next revision of the NUREG 0700 standard (Nuclear Regulatory Commission Human-System Interface Design Review Guide) because of his recognized chemical process plant dynamics and engineering expertise. He has managed since inception the development of the HLWM Division (DWPF, LWF, and ITP) simulators used in the operator certification program. He has developed the equation of state modeling basis for the simulator program. He has worked in the commercial sector in a number of Engineering Management and Leadership roles focused in the area of advanced technology development and field commissioning specifically in the chemical processing and power generation industries,

Examples include:

- Enhanced Oil Field Recovery Techniques
- Homogenous Catalytic Reactor Process Design and Commissioning
- Black Liquor Multi-Effect Evaporator and Kraft Boiler Start Up
- Combined Cycle Cogeneration Plant Optimization.

Mr. Rueter has authored and presented a number of technical publications in the process control and technology areas along with receiving two copyright's for advanced alarm handling methodology and process plant simulation modeling techniques. He was previously chairman of the Society for Computer Simulation Process Simulator Standards Committee and an invited panelist in the areas of Process Alarm Handling and Management and Human Interface for the Instrument Society of America.

Lou Papouchado

Westinghouse Savannah River Company
Team Expertise: Science

Dr. Papouchado holds a PhD in Analytical Chemistry from the University of Kansas. He has extensive experience in plastics at DuPont's experimental station, and extensive experience in the nuclear industry at SRS, primarily in the reprocessing and waste management areas. This experience includes R&D, plant engineering and production management. For the past 8 years, he has managed the Waste Treatment Technology Department at the SRTC R&D Center. He was responsible for plant support, applied research and technical support for plant authorization bases. He was also involved in the development of numerous chemical treatment processes for various radioactive waste streams. He has broad knowledge of waste treatment and disposal approaches, nationally and internationally. His prior positions include:

- Program Manager for Waste Management Operations
- Technical Superintendent of the Radiochemical Separations Facilities
- Production Superintendent of the Radiochemical Separations Facilities

SFP
3/13/98

J. D. Carlson

Westinghouse Savannah River Company
Team Expertise: Safety & Regulatory Engineering

Mr. Carlson holds a BS in Chemical Engineering. He is a Principal Manager for Westinghouse Safety Management Solutions responsible for providing licensing services to the DOE Complex and the commercial nuclear industry. His specific area of expertise is the development and implementation of Authorization Basis documentation. Additionally, he has over 28 years of technical and management experience in the nuclear industry including nine years at the Savannah River Site (SRS).

Some key positions and associated responsibilities held in the past are:

- Manager, High Level Waste Safety Analysis Programs (WSRC) – responsible for the development of the deterministic Safety Analysis Report and Technical Safety Requirements for the SRS Tank Farm Facilities. In addition, he was responsible for the SRS Tank Farm Authorization Basis and was the Subject Matter Expert (SME) on the compliance and implementation of the requirements.

- Manager, Reactor Restart Division Regulatory Compliance (WSRC) – responsible for the closure of all the Issue Management Restart issues and DOE Safety Evaluation Report open items for the restart of K-Reactor at SRS. Closure of the issues involved development of a risk-based process that assessed the impact of an issue upon the restart of the reactor.

- Manager, Management Services Division (Cygna Energy Services) – responsible for leading a team to conduct an independent assessment of the restart readiness for the utilities' Board of Directors for the Rancho Seco Nuclear Plant. This team was chartered to assess the risk (both programmatic and technical) to the general public.

- Manager, Browns Ferry Quality Assurance (TVA) – responsible for leading the Reactor Plant Improvement Program that provided root cause determinations and corrective action plans for systemic programmatic and technical problems at Browns Ferry Nuclear Plant that led to an NRC mandated shutdown.

- Senior Resident Inspector (NRC) – responsible for reviewing utilities' licensing submittals and developing Safety Evaluation Report Supplements. As part of the licensing process for Diablo Canyon Power Plant, he was testified as an expert witness in front of the Atomic Safety Licensing Board regarding adequacy of the deterministic Safety Analysis Report and Technical Specifications.

Some key consulting assignments were:

- Revision/implementation of the Pacific Gas and Electric's QA Program
- Development of Decommissioning Plan for Humboldt Bay Nuclear Plant
- Development of the Commercial Grade Dedication Procurement Process for Edison Electric Institute-National Construction Issues Group

SFP
3/13/98

Gary Abell

Westinghouse Savannah River Company
Team Expertise: Systems Engineering Analysis

Mr. Abell holds a BS and MS in Metallurgical Engineering from Wayne State University, Detroit, Michigan.

Mr. Abell is currently a Manager in the Systems Engineering Department of the Projects, Engineering & Construction Division (PECD) of WSRC.

In addition to the seven years involved in applying the systems engineering process to SRS projects, he has twenty two years experience in the commercial nuclear field. This experience was focused on developing technology for field applications on NSS system components using a systematic approach for developing design input and outputs.

Key positions and activities in the past fifteen years include:

- Several management positions responsible for engineering and technology development of equipment and processes to test commercial PWR/BWR and fossil power plant components.

- Applying systems engineering in developing the Heavy Water Reactor option of the New Production Reactor program.

- Project Engineering Manager for the preconceptual/conceptual design of the Commercial Light Water Reactor Tritium Extraction Facility.

- WSRC systems engineering representative to the DOE HQ Systems Engineering Team (FM-20).

- Systems Engineering Manager for high level waste projects responsible for managing the systematic development of preconceptual and conceptual design inputs/outputs of both line item and GPP/CE projects.

Mr. Abell has been the recipient of the George Westinghouse Signature Award for his knowledge of, and team leadership in, implementing the systems engineering process on a large and complex project. The SE processes used included mission analyses, development of functions, requirements, external interfaces, alternatives, and risk assessments. He has presented the results of system engineering applications at various DOE complex conferences, is a member of the International Council On Systems Engineering (INCOSE), and holds two patents.

SFP
3/13/98

Peter Hudson

BNFL Savannah River Corporation
Team Expertise: Waste Process

Peter Hudson obtained a BSc in Chemical Engineering and an MSc (with distinction) in Nuclear Technology from Imperial College, London University, England. He is now a Senior Technical Manager with BNFL who has almost 30 years experience in R&D and technical support within the nuclear industry. The majority of his work experience has been at BNFL's Sellafield plant in England, where he has been engaged in engineering support and R&D across a wide range of nuclear operations, including High Level Waste evaporation and storage, oxide fuel shearing, dissolution, off-gas treatment and feed clarification for BNFL's new THORP reprocessing plant, and advanced separation techniques for the next generation of reprocessing plants. This role included design support for new plants through Hazard and Operability Studies (HAZOPS) and review of safety documentation. He is currently responsible for the R&D and Strategic Planning Group within Solid Waste Division at SRS and is the principal conduit for transferring BNFL technology into the Savannah River Site.

Some key assignments which demonstrate engineering and operational assessment are as follows:

- Engineering Support Manager, High Level Waste
- R&D Manager, THORP Head End Processes
- Sr. Manager, Sellafield R&D
- Deputy Head, Sellafield R&D
- VP-Technical, BNFL Savannah River Corporation

Edward Cussler

Professor, University of Minnesota
Team Expertise: Chemical

Professor Cussler has a B.E. in Chemical Engineering from Yale and a M.S. and Ph.D. in Chemical Engineering from the University of Wisconsin. His research centers on new separations processes, especially those involving thin films, and mass transfer phenomena. He has taught at Carnegie-Mellon University, the Massachusetts Institute of Technology, and the University of Minnesota. He is the recipient of numerous awards from A.I.Ch.E., Carnegie-Mellon, Yale and University of Michigan. He is past President of A.I.Ch.E. and past Chair of the American Association of Engineering Societies. He is on the Editorial Boards of "Separations", "Journal of Membrane Science", and "A.I.Ch.E. Journal". He has over 150 Journal publications and books in the areas of mass transfer and separations. He is widely recognized as an expert in these areas and has broad experience consulting with industry.

Jack Watson

Oak Ridge National Laboratory
Team Expertise: Science

Dr. Watson holds a Ph.D. in Chemical Engineering from the University of Tennessee. He has extensive experience in the areas of separations, adsorption and ion exchange, particularly as it applies to radionuclides. He also has wide experience in process development for the separation of radionuclides as it applies to reprocessing, waste treatment, and environmental restoration. He is a Senior Research Engineer at the Oak Ridge National Laboratory, Coordinator of the DOE program on Efficient Separations and Processing, and part-time professor of Chemical Engineering at the University of Tennessee. He is a fellow of the A.I.Ch.E., Associate Editor of the "Separation Science and Technology Journal", and on the Editorial Board of "Separations Technology". He has served on numerous committees for DOE and other governmental groups and chaired numerous symposia. He has numerous publications in the separations area.

SFP
3/13/98

E. J. Kosiancic

Kosiancic & Associates

Team Expertise: Process Engineering and Operations

Mr. Kosiancic holds a B.S. in chemistry from Gonzaga University, a M.S. in Nuclear Engineering from Michigan Technological University, and worked toward a Ph.D. in Chemistry from Purdue University. He is a retired senior manger with over thirty years of broad-based experience in technical, operational, and business management in the nuclear chemical processing and waste management sector. He has extensive experience with Maintenance and Operations (M&O) contractors at Hanford, serving in management positions responsible for direction of chemical/analytical laboratories, process engineering, strategic and long range planning, capital projects, planning and integration of engineering, and operation of high level tank farms. His prior experience with Babcock and Wilcox included management positions at NUMEC, Naval Nuclear Fuel Division, and Research and Development Division where he gained extensive experience in technical and operations management. He has always considered chemical, nuclear, and industrial safety as paramount to the operation of nuclear chemical processing and waste management plants. He had direct safety responsibility by virtue of technical and operation positions and oversight by his involvement in safety committees. Mr. Kosiancic's expertise and experience was gained through a wide range of management assignments. Examples include:

- Disposal Engineering - The engineering for the Hanford high level waste program. The scope of work included waste removal from the tanks, knowledge of the waste composition, planning for waste staging, adjustment, and transfer to a private vitrification contractor.
- Laboratory Operations - Included laboratories for analysis of high level processing and waste samples as well as environmental laboratories and pilot plants. Existing laboratories were upgraded and expanded and new laboratories constructed. Flowsheet development and changes were tested at the lab bench and pilot plant prior to plant testing. Chemical processes were evaluated for nuclear and non-nuclear applications.
- Chemical Processing Systems Engineering - strategic and long range planning including mission identification, alternative analysis, and evaluation of trade-offs. Capital project engineering including engineering studies, functional design criteria, and direction to architect/engineering performing conceptual and detail design.
- Process Engineering - Process engineering for Hanford processing and waste management plants (Z-Plant, PUREX, B-Plant/WESF, Tank Farms) and for commercial and naval nuclear fuel at Babcock and Wilcox. Processing plants are controlled to flowsheet conditions using operating specifications and procedures to assure safe and efficient operation.
- Plant. Operations-Facilities managed include the Hanford high level waste tank farms, the NUMEC plants for the production of low enriched uranium powder and pellets, high enriched uranium fuel materials, Pu/U mixed oxide FFTF fuel, zirconium metal powder, and the Naval Nuclear Fuel Division high enriched uranium scrap recovery plant.

Mr. Kosiancic has authored a number of technical documents in nuclear fuel preparation and manufacturing. He holds two patents.

ATTACHMENT 5

WSRC-RP-98-00163, Systems Engineering Management Plan for Development of Alternatives to Process and Dispose of High Level Waste Salt (U)

ATTACHMENT 5

WSRC

High Level Waste Salt Disposition

Systems Engineering Team

Systems Engineering Management Plan

for

Development of Alternatives to Process and Dispose of High Level Waste Salt (U)

WSRC-RP-98-00163

Revision 0

April 17, 1998

UNCLASSIFIED

Approved By: _____ 4-17-98

Gary E. Abell,
WSRC, Systems Engineering
HLW Salt Disposition Team

Date

Approved By: _____ 4-17-98

Steve Piccolo,
WSRC Team Leader
HLW Salt Disposition Team

Date

REVISION SUMMARY

Rev. No.	Rev. Date	Affected Sections	Description of Revision
0	4/16/98	All	This document supercedes Revision 0 of Document Y-TR-H-00001. The changes reflect a new document number, incorporation of DOE comments, schedule status updates, and general editorial comments for clarification. The revision bars in the right margin identify changes from the superceded document.

TABLE OF CONTENTS

Section	Page
1.0 Introduction	6
2.0 Scope	7
3.0 Systems Engineering Process Overview	8
4.0 Roles and Responsibilities	11
5.0 Definition and Development	13
5.1 Mission Definition and Analysis	13
5.2 Functions and Requirements Analysis	14
5.2.1 Functional Analysis	14
5.2.2 Requirements Analysis and Allocation	15
5.3 Alternative Identification, Evaluation, and Selection	17
5.4 Verification and Validation	19
6.0 Technical Program Planning and Control	20
6.1 Technical Integration	20
6.1.1 Technical Planning	20
6.1.2 Technical Monitoring and Control	20
6.2 Interface Control	20
6.3 Risk Management	21
6.4 Configuration Management	22
6.5 Report Format	22
6.5.1 Content	22
6.5.2 Format	23
6.5.3 Distribution	23
6.5.4 DOE Review Cycle	23
7.0 Engineering and Programmatic Specialty Integration	24
8.0 References	25
9.0 Attachments	26

LIST OF FIGURES

Figure	Title	Page
1	Relationship of the Systems Engineering Process and Project Life Cycle	10
2	Mission Definition and Analysis	14
3	Alternative Identification, Evaluation, and Selection	19
4	Risk Versus Technical Maturity	22

1.0 Introduction

Systems Engineering (SE) is a methodical and disciplined approach to cost effectively achieve an end product. It is a *top down* process that begins with a well defined Customer need or problem. Through the process of defining "necessary and sufficient" functions and requirements (referred to as design input) with adequate bases, and the identification and management of risks and interfaces (both physical and organizational), a sound basis for successfully achieving the end product will exist. The formal requirement to develop and implement a Systems Engineering Management Plan (SEMP) for this activity resides in the SRS High Level Waste Salt Disposition Systems Engineering Team Charter[1].

The focus of this SEMP is on the activities necessary to develop and select a safe and credible preferred alternative(s) to the existing In Tank Precipitation (ITP) process and treatment method of high level waste salt within the SRS tank farms. The preferred alternative(s), resulting from the SE process, will be formally submitted to the Department of Energy (DOE).

This SEMP implements and is consistent with references 1, 7, 8, and 13, shown below. All other references (including the others shown below) or SRS procedures will be used as guides on an as needed basis.

- High Level Waste Salt Disposal Systems Engineering Team Charter (Ref. 1)
- WSRC E7 Manual: "Conduct of Engineering & Technical Support" (Ref. 2)
- WSRC 3S Manual: "Conduct of Modification" (Ref. 3)
- PE&CD KASE Manual: "Key Activities for Successful Execution" (Ref. 4)
- DOE Order 430.1: "Life Cycle Asset Management" and associated Good Practice Management Guides" (Ref. 5)
- WSRC 2S Manual: "Conduct of Operations" (Ref. 6)
- DOE Policy 450.4: "Safety Management System Policy" (Ref. 7)
- DOE Guide 450.4-1: "Integrated Safety Management System Guide" (Ref. 8)
- DOE HLW Salt Disposition Alternatives Evaluation Program Plan (Ref. 13)

This plan details the minimum set of expectations for deliverables and lists the deliverables and a logic/duration schedule for these deliverables.

This SEMP is a "living document" and should be reviewed and updated if key inputs change, such as the Team Charter[1], as the maturity of alternative(s) proceeds beyond the study and selection process.

2.0 Scope

This SEMP describes the methodology, tools, deliverables, and schedules required to implement the systems engineering approach on the preconceptual activities described below.

The Westinghouse Savannah River Company (WSRC) High Level Waste Management Division (HLWMD) has defined a need to re-evaluate technology and/or operational alternatives to processing and treating high level waste salt which exists in the Savannah River Site tank farms. The processing and treatment of this waste has, until very recently, utilized the In Tank Precipitation process. The purpose of the existing process and treatment phases is to prepare the HLW waste for the Defense Waste Processing Facility (DWPF) and the low level waste for saltstone. Safety and production attainment issues surrounding the currently configured ITP approach have arisen from unexpected levels of benzene generation. Safely processing and treating the high level waste is very important to the SRS and the Department of Energy in order to meet waste cleanup initiatives at SRS.

The "end product" of implementing this SEMP will be the selection of a preferred alternative to be subsequently designed and/or implemented. Based on risk, parallel path alternatives may be recommended.

This SEMP is tailored to begin at problem definition and end with a down selection of alternatives. Extension of the systems engineering process to post alternative selection activities, e.g., conceptual design, design execution, construction, testing, turnover, etc., can be achieved through revision of this SEMP.

3.0 Systems Engineering Process Overview

The DOE is a strong advocate of the systems engineering process and has most recently reflected this view in Order 430.1, "Life Cycle Asset Management"[5]. Several "Good Practice Guides" have been developed by DOE to assist interested parties in implementing systems engineering methods and tools on a rigorous basis. The implementation of this SEMP is intended to fulfill the spirit and intent of the Order and Guides.

The systems engineering process is a *top down* approach and has long been recognized as a viable technical management approach to define and control the development of complex technical programs/systems with many uncertainties, interfaces, and elements. The main goal of systems engineering approach is to deliver an end product that meets cost, schedule, and technical requirements while minimizing the environmental, safety, and health risks. The use of this approach will enable the HLW Salt Disposition Systems Engineering Team to meet its intended goal.

The SE process steps in Figure 1 are shown in relationship to project cycles and are discussed in more detail later. The sections addressing these steps are summarized below:

- Definition and Development

  Definition and Development represents the logical sequence of activities and decisions designed to transform facility operational needs and Customer requirements into a preferred system concept, design, and its related performance parameters to meet the HLW Mission need. Definition and Development steps include:

  - Mission Definition and Analysis
  - Functions and Requirements - Analysis and Allocation
  - Alternative Designs, Evaluation, and Selection
  - Verification and Validation

  These SE process steps are described in detail in Section 5.0

- Technical Program Planning and Control

  Technical Program Planning and Control encompasses management activities to effectively plan and control the activities to meet program technical requirements within cost and schedule constraints. Technical Program Planning and Control steps include:

- Technical Integration
- Interface Control
- Risk Management
- Configuration Management
- Deliverables and Schedules

These SE process steps are described in detail in Section 6.0.

- Engineering and Programmatic Specialty Integration

This integration is the timely and appropriate intermeshing of engineering efforts and specialty disciplines such as chemical processing, reliability, maintainability, system life cycle cost, human factors, safeguards and security, environmental, safety (primarily authorization basis requirements), health, regulatory permits, etc. This type of integration ensures that all aspects of the project are reviewed from the specialized areas important to project formulation, implementation, and operation.

These SE process steps are described in more detail in Section 7.0.

The SE process steps, as described in this SEMP, will be applied to the HLW activity using a graded approach. Risk is the primary factor considered in determining the degree to which the process steps are applied.

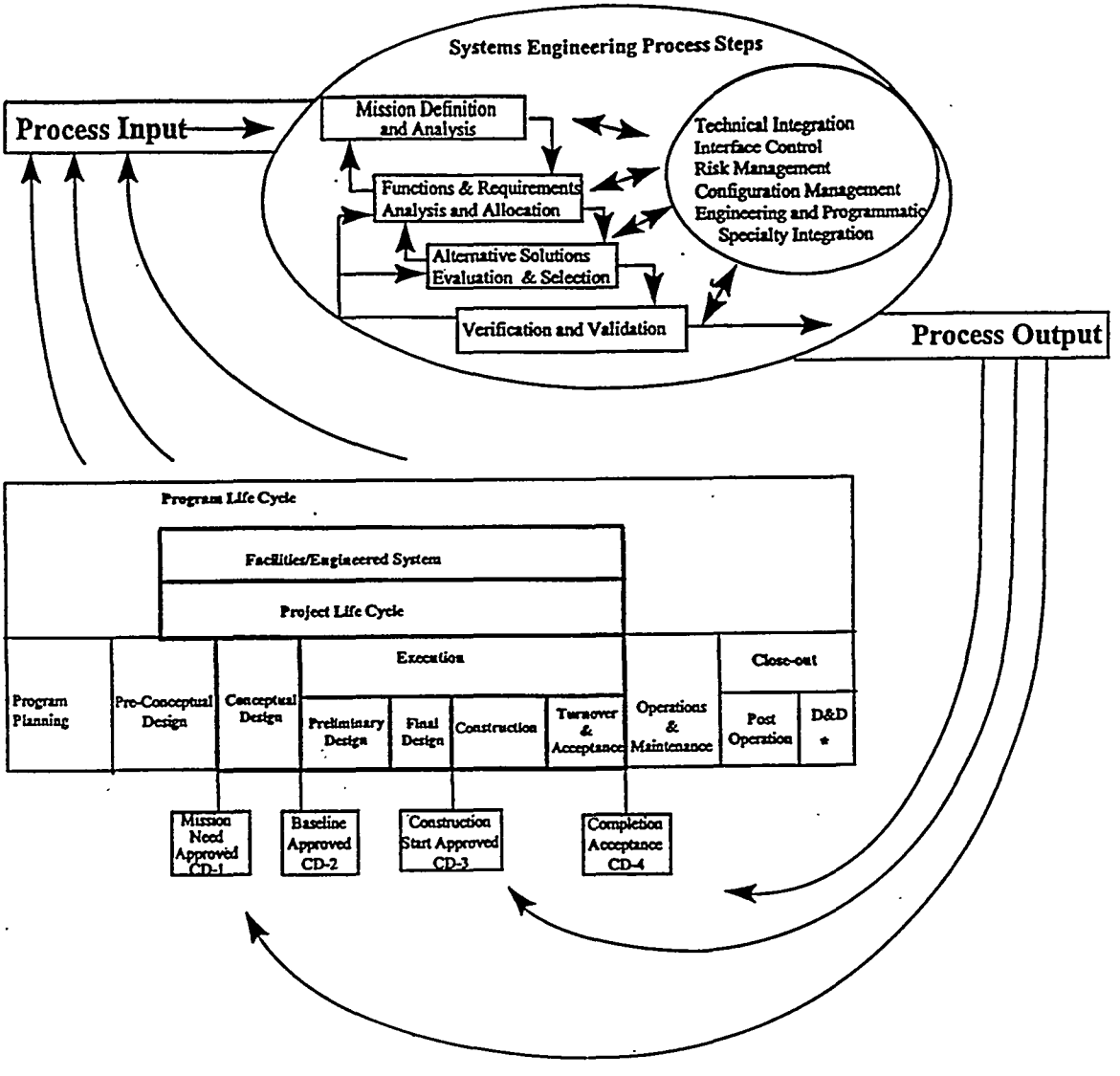

CD = Critical Decision (DOE)
D&D = Decontamination & Decommissioning

Figure 1. Relationship of the Systems Engineering Process and Project Life Cycle

4.0 Roles and Responsibilities

The members of the High Level Waste Salt Disposition Systems Engineering Team (the Team) are assigned the following roles and responsibilities for the effective implementation of this SEMP.

4.1 Team Sponsor:

The Vice President & General Manager of the WSRC High Level Waste Management Division is responsible for:

- Developing and approving the Team Charter
- Identifying the Team Leader
- Approving Team Member selection
- Obtaining funding for Team activities
- Accepting Team recommendations and request DOE concurrence to proceed to ITP Project Management Process Phase 2 (Design/Construction/Startup).

4.2 Team Leader:

The Team Leader reports to the Team Sponsor and is responsible for:

- Identifying subject matter experts for Team membership and obtaining approval(s)
- Communicating WSRC and DOE expectations to Team members
- Providing a formal point of Team contact with WSRC and DOE for issuance of formal documentation or requests
- Allocating funding for Team members
- Providing overall coordination and management of the Team
- Approving the SEMP and/or revisions
- Approving documents, generated by the Team, requiring distribution
- Promoting and supporting the consensus process and document dissenting opinions

4.3 Systems Engineering Representative:

The Systems Engineering representative reports to the Team Leader and is responsible for:

- Developing and obtaining approval of SEMP and any revisions thereto
- Participating on the Team as the systems engineering process expert and to facilitate the Team's efforts to insure compliance with the SEMP

- Identifying and scheduling SE activities and deliverables in accordance with this SEMP
- Facilitating constructive Team interaction and advising the Team Leader of dissenting opinions.
- Maintaining the decision logic and report/document files generated.

4.4 Team Members:

Each of the other Team members reports to the Team Leader and is responsible for:

- Contributing in their respective area of expertise
- Reviewing Team outputs for concurrence
- Developing Team outputs as assigned

4.5 Selected Candidates

The members selected and approved for the HLW Salt Disposition Systems Engineering Team are identified and approved in Reference 11, entitled "WSRC Candidate Selections for the HLW Salt Disposition Systems Engineering Team".

5.0 Definition and Development

Definition activities of the SE process include identifying and defining the Mission, based on a problem statement, analyzing the Mission definition to develop the functions and requirements that ensure the SRS and HLW System Missions objectives are met, and validating that the functions and requirements have been completely developed. The functions and requirements are defined at each level (facility, system, subsystem, and components) of development. These activities are described in more detail in Sections 5.1 and 5.2.

Development activities of the SE process include identifying and evaluating design alternatives, selecting the best design solution, and verifying that the preferred alternative(s) selected meets the functions and requirements at each level. These activities are described in Sections 5.3 and 5.4.

5.1 Mission Definition and Analysis

A clear and complete Mission for the HLW process and treatment activity will be identified before functions, requirements, alternative selection or design will proceed. The needs and objectives for alternative solutions and the anticipated operational environment must be clearly understood from the outset. An important tool in the SE process, during the identification of the initial Mission will be the use of key assumptions, if needed. These assumptions will attempt to establish important parameters of scope until definitive design input is available. This effort will consist of the Team review of all available documentation related to the need and justification for alternative processing and treatment approaches. If the Team Sponsor defines the Mission need(s) it will be used by the Team. Figure 2 illustrates the Mission Definition and Analysis Phase.

The Mission statement will be documented and approved by the Team Leader.

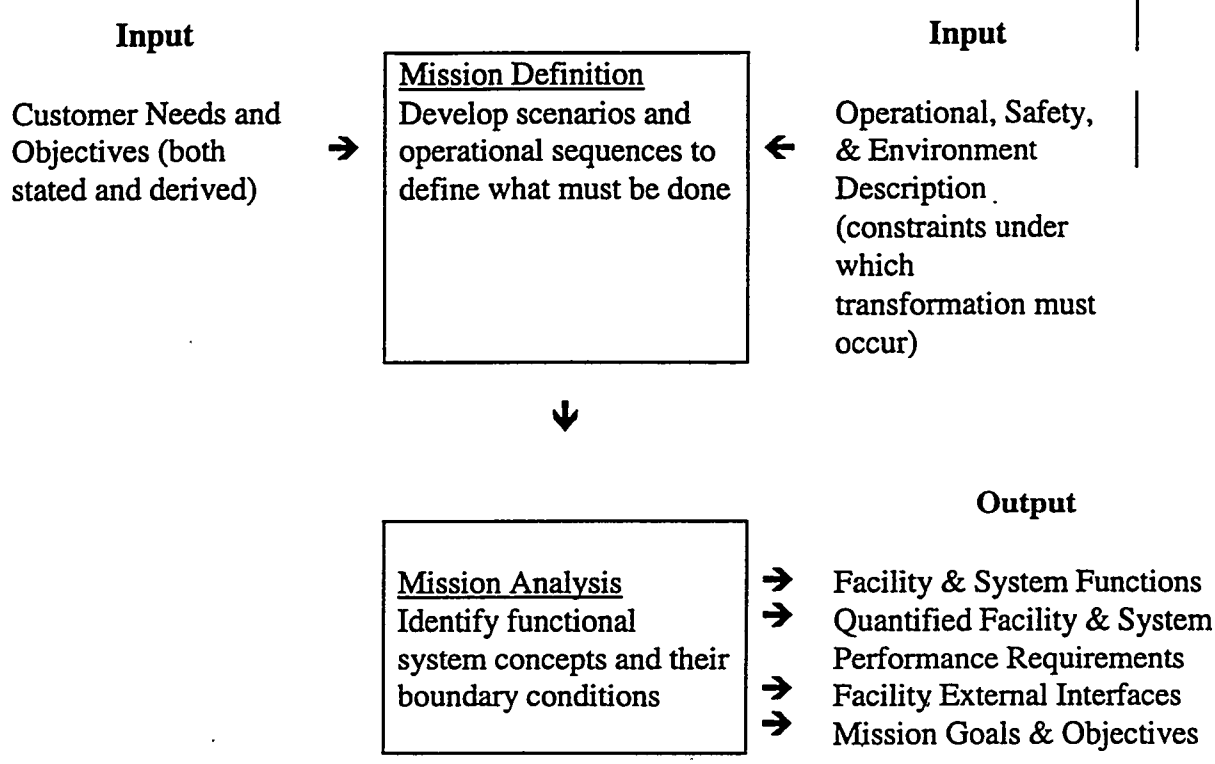

Figure 2. Mission Definition and Analysis

5.2 Functions and Requirements Analysis

This SE process step identifies, controls, and documents the necessary and sufficient set of functions and requirements to ensure achievement of defined Mission needs and customer expectations. Operational, safety, and maintenance concepts are used to develop functions, performance requirements, design criteria, and interface requirements.

5.2.1 Functional Analysis

Analyzing the Mission statement establishes the initial set of the highest level functions. This level of functions encompasses all the key aspects that the final solution must perform in order to successfully meet the Mission. Functions are developed to answer the question *"what must the solution do?"*. The process of breaking down these functions into successive levels of subfunctions is called "functional analysis".

The top-level set of preconceptual functions will be documented and approved by the Team Leader in Phases I and II. In Phase III, these design inputs will be incorporated into a Facility Design Description (FDD) document. As the program progresses into conceptual design, the initial functions will be further expanded into subfunctions and allocated to systems, subsystems, and/or components. This is an iterative process which occurs as more information becomes available, e.g., from studies and design selection. At each level, (system, subsystem, and component) subfunctions are identified based on the functions, requirements, and resulting design decisions from the previous level. The results of this Functional Analysis for each system will be documented in System Design Descriptions (SDD) for each major system during conceptual and preliminary design stages.

A functional hierarchy diagram is used to show the breakdown of functions into subfunctions. A functional flow block diagram is used to show the logical relationship of functions or subfunctions at the system or subsystem level. An allocation matrix is then used to document which system, subsystem, or component performs the function and subfunctions. These diagrams will be included in the FDD and SDD's. The Writers Guide[14] for the preparation of FDD's and SDD's will be used as a guide for preliminary design documentation.

For the preconceptual stage, Phase III, subsections 1.1 (functions and requirements), 1.2 (preliminary design criteria), 1.3 (applicable codes, standards, and orders) of the WSRC Writers Guide[14] for Section 1 of the FDD will be developed to facilitate the pursuit of alternatives and begin the formal technical baseline configuration control process. The aforementioned functions and requirements shall be configuration controlled per the E7 Manual procedures covering these documents.

5.2.2 Requirements Analysis and Allocation

Following the identification of functions at each level, Requirements Analysis and Allocation is conducted to identify the necessary and sufficient set of requirements at each level. The identified requirements may result from the functions, requirements from the next higher level, or derived from an alternative study, if available.

Requirements are measurable characteristics which define *"how well"* a function must perform. Every function must have at least one requirement assigned to it. The requirements, ultimately, will be described by or contain "units of measure", e.g., rads/hour, gpm, psi, square feet, etc. Each requirement must have a traceable basis and will be assessed and tested for validity. The validity testing involves reviewing each requirement to

determine if they are necessary and measurable. In the preconceptual phases, defining a defensible basis for each requirement is the appropriate level of validation.

Generally, there are two major categories of requirements, i.e., technical and programmatic, which can be subdivided further, including but not limited to the following types of requirements:

Technical	Programmatic
• Safety requirements	• Schedule requirements
• Performance requirements	• Life Cycle Cost requirements
• Design criteria requirements	• Permit requirements
• Interface requirements	• Contractual requirements

Safety requirements reflect the Integrated Safety Management System (ISMS) philosophy and rules traceable back to DOE Policy 450.4[7] and Guide 450.4-1[8].

Performance requirements are always linked to the appropriate function at each level of the functional hierarchy. Every function identified in the Functional Analysis must have at least one requirement associated with it.

Design criteria/constraints identified are typically traceable to National Codes and Standards, DOE Orders, SRS Site Standards, Component Development Reports, Permits, Federal and State regulations and statutes, trade off/alternative studies, and facilities operations experience of similar systems. Identified design constraints are allocated to systems, structures, and components (SSC's).

The characteristics at the interface of two systems are used to identify and impose requirements (e.g., performance, constraints, and physical) on the interfacing systems, both internal and external to the facility, and these are deemed interface requirements. The control of interface requirements and the use of Interface Control Documents (ICD)s is covered in Section 6.2 of this plan.

If a requirement is identified, but further study is needed to define the specific value of interest, a **TBD** (To Be Determined) or **HOLD** will be used in the stated requirement. A **HOLD** will be put next to a specified value indicating that some preliminary basis exists but further confirmation is needed to provide a pedigree value. A **TBD** is used when insufficient information exists to state a value in the requirement at the present time.

Any specific facility level requirements identified during the systems engineering evaluation will be documented in the FDD during Phase III of the preconceptual stage, and system and component level requirements will be documented in SDD's in post preconceptual stages.

5.3 Alternative Identification, Evaluation, and Selection

Identifying, evaluating, and selecting alternatives is illustrated in Figure 3. The evaluation of alternatives seeks to balance technical considerations against those of safety, risk, cost, and schedule. The objective of the evaluations is to arrive at the lowest possible cost solution without unacceptably compromising safety, technical, or schedule aspects.

A list of potential alternative concepts and ideas will be prepared after the initial set of necessary and sufficient functions and requirements have been documented in Phase I. Formal brainstorming sessions will be conducted to identify potential methods, processes, technologies, systems, and/or equipment that meet the functions and requirements. In addition to the brainstorming sessions, literature searches, and a simple method to solicit ideas for submittal to the Team will be utilized to allow ideas (not generated in the brainstorming sessions) to be captured.

The brainstorming and solicitation of alternatives to the existing configuration of the ITP process may result in a substantial volume of ideas. To the extent possible, these ideas will be grouped. An initial screening of the identified alternatives to an "initial list" will be conducted. The method of performing the initial screening will be based on defining "non-negotiable" criteria that any alternative must meet. These criteria, which will include the initial design input (functions and requirements), shall be defined by the Team and documented. Candidate alternatives that do not satisfy these requirements are either revised or eliminated from further consideration. Any alternatives screened out, and the basis for the rejection, shall be documented for future reference. Inadequate information about an alternative evaluated against selection or screening criteria will not be cause for rejection.

The initial list shall contain no more than twenty-five candidate alternative solutions. Further down-selecting of the initial list to a "short list" of about five options and ultimately to a preferred alternative(s) will be conducted as additional design input and more discriminating selection criteria are identified.

The final decision analysis methodology for the down-selection process will utilize the Multi-Attribute Utility Analysis (MAUA) approach. The first step in this process requires all the attributes (selection criteria) to be ranked against each other and weights assigned to each attribute reflecting its relative importance to

others. Next, the attributes are assigned "utility functions" (UF) which quantitatively split each attribute into three or more ranges.

For example, if "Technical Maturity" is selected as an attribute with a "weight" of 0.2, then the utility functions could be:

	Utility Functions (UF)	Utility Function Value
Most desirable	Nuclear Industry Proven	1.0
	Non-Nuclear Industry Proven	0.8
	Pilot Scale	0.5
	Laboratory Scale	0.2
Least desirable	Unproven	0.0

The weighting factor assigned to the "Technical Maturity" attribute is multiplied by the UF which best describes the alternative, e.g., 0.5 (pilot scale).

Attribute weight factor x UF = Attribute value for that alternative

$$0.2 \times 0.5 = 0.1$$

The attribute values for each alternative will be additive and alternatives with the highest sums are deemed the most desirable. More discriminating attributes or utility functions may be defined to further screen concepts which have close total sums.

As mentioned above, the selection of the preferred alternative is based on decision criteria. The selection criteria should be chosen prior to the commencement of studies, if possible, in order that the study can address the criteria. All selection criteria used, the associated utility functions, calculations, and results of accepted/rejected alternatives from the initial list to short list and/or a final preferred alternative(s), shall be documented and approved by the Team Leader.

Risks, to the extent they exist, should be considered as an attribute during the MAUA selection process. In addition, flowsheets will be developed on down selected alternatives to further enhance the understanding and evaluation of candidate options.

Input		**Output**
Functions → Requirements →	Alternative Identification, Evaluation, and Selection. Alternatives identified to meet functions, requirements, and constraints. Alternatives evaluated against selection criteria, i.e., design input, risk, cost, and schedule.	→ Preferred Alternative(s) → Engineering Calculations → Alternative Evaluation Report → Technical Reports → CDR or Design Input

Figure 3. Alternative Identification, Evaluation, and Selection

5.4 Verification and Validation

Verification and validation activities will be conducted during the scope of work covered by this SEMP.

Validation

An activity that ensures that a set of functions and requirements is consistent, complete, and that the "end product" will satisfy stakeholders' true needs and expectations[9].

For the purposes of the Team, the completed design input (functions and requirements) shall be validated. Team validation will be completed by defining traceable references for all design input requirements identified.

Verification

An activity that ensures that the "end product" or selected design solution satisfies the functions and requirements. This is done through analysis, inspection, or testing of systems, structures, or components[9].

The formal independent review of the Team's output will be by the DOE Independent Team. The WSRC Team, at its discretion or need, may elect to obtain reviews or input, e.g., pilot tests, studies, or pursue risk mitigation strategies, prior to the Independent Team review.

6.0 Technical Program Planning and Control

Technical Program Planning and Control includes those tasks necessary to administer, plan, direct, coordinate, control, and integrate all technical and analytical tasks. Identified risks and associated mitigation strategies are key drivers in planning and performing these activities.

6.1 Technical Integration

6.1.1 Technical Planning

A schedule of technical activities, e.g., definition of functions, requirements, interfaces, selection criteria, risk assessments, etc., will be required in order to effectively implement the systems process. The completion dates for key deliverables are shown in Attachment 1. Also, the scheduling of appropriate HOLD points or key decision points in the master schedule are good technical planning tasks. The logic tied schedules for preconceptual Phases I, II, and III are shown in Attachments 2, 3, and 4, respectively. The SEMP implementation diagrams for each phase are shown in Attachments 5, 6, and 7, respectively.

6.1.2 Technical Monitoring and Control

Technical Monitoring and Control involves tracking the status of engineering activities against the technical planning identified in Section 6.1.1. Technical Monitoring and Control identifies and analyzes technical issues that may surface as design input or alternative evaluation activities are conducted, and initiates corrective actions. This is accomplished through frequent assessments of activity progress by the Team Leader.

Management will use information from periodic, scheduled, and event-driven reports and technical reviews to monitor technical activities and to identify and evaluate actual accomplishments of tracked technical activities and new issues.

6.2 Interface Control

External and internal interfaces for the development of alternatives will be identified initially in Phase I and II and documented as "Initial Design Input" approved by the Team Leader. These interfaces are defined in the HLW Salt Disposition Interface Requirements document[12] (Reference 12 is a draft document used for input to Phases I and II of the systems engineering process and must be finalized prior to Phase III). In Phase III, the interface information will be incorporated into the FDD. During subsequent phases, e.g., conceptual design,

detailed interface requirements will reside in SDD's. Interface requirements identify functional, physical, performance aspects, as well as, design constraints and boundary conditions. All interfaces have an "owner, supplier, and receiver" which will be assigned in Phase III.

The FDD will contain an interface diagram and interface requirements for interfaces with systems external to the defined boundaries. Each SDD will contain an interface diagram and interface requirements covering all interfaces with other systems (internal interfaces), as well as, any applicable external interfaces. Appendix C of the SDD's identify requirements of the interface and references to any Interface Control Documents (ICD)s, if needed. The ICD is a management tool formalizing an agreement between two or more entities having resources that functionally and physically connect. An ICD can be either a drawing, flow sheet, or document of a standardized form and content. Depending on the degree of complexity of the alternatives considered, interface control working groups may be necessary to develop interface agreements. Within these working groups, representatives develop documentation to establish the requirements to which the interface is designed and developed.

6.3 Risk Management

A high value attribute of the SE process is the requirement to identify and manage risks early in the process. Risk is determined by evaluating the "consequence" of an event occurring and the "probability" of the event occurring. Any lack of information, knowledge, or understanding, about an aspect of the design inputs, interfaces, stakeholders, or proposed alternatives to be used in the processing and treatment of the HLW salt, creates a finite risk. Therefore, an assessment of risks must begin early and be done frequently.

All risks ultimately manifest themselves as cost, schedule, or safety issues; however, more detailed analysis of risks is possible and desirable, to focus in on specific aspects, such as technical, logistical, environmental, etc.

The four prime steps in risk management include:

- identification of risks
- assessment of consequences and probability (high, medium, low) of identified risks
- handling the risk either by preventing, accepting, reducing, mitigating, or transferring it
- monitoring the risks handling activities agreed upon

WSRC Manual E11[10] contains procedures for guiding risk assessments and planning for both technical and non-technical risks, respectively.

The risk assessment of alternatives will identify the level of maturity for technology as shown in Figure 4. The higher the level of technical maturity, the lower the associated risk.

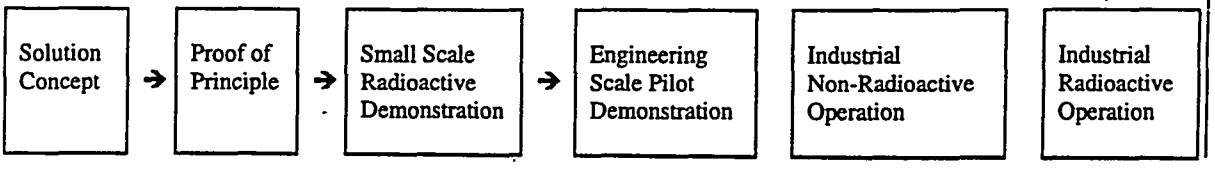

Figure 4. Risk Versus Technical Maturity

As a minimum, all high risks identified during the preconceptual stage shall have a preliminary plan developed to address what strategy(s) are needed. Key activities should be logic tied to the master schedule for this initiative. As subsequent program stages evolve (conceptual and detailed design), detailed Risk Management Plans (RMP) and handling strategies will be developed by the Team.

Handling of high risks should be a primary source of input when defining future deliverables, costs, and schedules for subsequent phases. Often times studies are commissioned to further understand and/or reduce a high risk to a lower risk.

6.4 Configuration Management

Configuration Management (CM) will be implemented to establish accuracy and consistency among design requirements, physical configuration, and facility documentation for SSC's and process software to the extent they exist. Maintaining an accurate configuration is essential throughout the Team's chartered activities.

Documents shall be configuration controlled in accordance with the WSRC Manual procedure governing that document. For documents not specifically traceable to a WSRC Manual, the Team sponsor and/or Leader's signature and date will suffice.

6.5 Report Format

6.5.1 Content

Reports and documents, generated by the Team, intended for distribution to the Team Sponsor or DOE shall adhere to the following content features:

- Are stand alone documents
- Address why the report is necessary
- Have clear and traceable references
- Provide the bases for recommendations, conclusions, data, or calculations used
- Clearly list assumptions used

6.5.2 Format

The following title and signatures shall be used:

- Title: HLW Salt Disposition Systems Engineering Team
- Date/Revision Level
- "Prepared by" and date
- "Approved by" and date

6.5.3 Distribution

The minimum distribution for formal documentation sent to DOE is as follows:

- DOE: R. J. Schepens
- DOE: W. F. Spader
- WSRC Team Sponsor
- WSRC Team Leader
- All WSRC Team members
- Records

6.5.4 DOE Review Cycle

It is assumed that the DOE comment and concurrence cycle is ten business days for documents submitted by the Team when review, comment, and concurrence are requested.

7.0 Engineering and Programmatic Specialty Integration

Engineering and Programmatic Specialties are those disciplines which support the technical evaluation and design process by applying knowledge from a specific area to ensure complete and adequate development of design input and design output. These specialties will be integrated into the development effort through their involvement in the design input, alternative studies, and the verification and validation activities of the developed alternatives. The SE process requires, and is dependent on, identifying the appropriate type and quantity of Team participants.

A list of Subject Matter Expertise (SME) and attributes necessary for Team membership will be approved by the Team Sponsor. The anticipated specialty disciplines applicable to the Team activities include, but are not limited to, the following:

- Systems Engineering
- Reliability, Availability, and Maintainability
- Safeguards and Security
- Regulatory Compliance
- Environmental, Authorization Basis/Safety, and Health (including hazard analysis)
- Waste Minimization and Pollution Prevention
- Risk Management
- Life Cycle Cost
- HLW Operations
- Radiation Engineering
- Savannah River Technology Center
- Chemistry and Chemical Engineering
- Design Engineering
- Construction
- Fire Protection

Outside participants, e.g., DOE contractors, university, and commercial experts will be considered for Team membership or consultation.

8.0 References

1. High Level Waste Salt Disposal Systems Engineering Team Charter dated 3/13/98
2. WSRC Manual E7 entitled, "Conduct of Engineering & Technical Support"
3. WSRC Manual 3S entitled, "Conduct of Modification"
4. PE&CD "Key Activities for Successful Execution" Manual
5. DOE Order 430.1 entitled, "Life Cycle Asset Management"
6. WSRC Manual 2S entitled, "Conduct of Operations"
7. DOE Policy 450.4 entitled, "Safety Management System Policy"
8. DOE Guide 450.4-1 entitled, "Integrated Safety Management System Guide"
9. Electronic Industry Association (EIA) Standard 632 entitled, "Processes for Engineering a System"
10. WSRC Manual E11 entitled, "Project Management and Control Manual"
11. WSRC "Candidate Selections for the HLW Salt Disposition Systems Engineering Team"
12. WSRC "HLW Salt Disposition Interface Requirements"
13. DOE memorandum, Rudy to Owendoff, entitled, "Program Plan for the Evaluation of HLW Salt Alternatives"
14. WSRC Manual WSRC-IM-93-18, "Writer's Guide for the Preparation of FDD and SDD's"

9.0 Attachments

9.1 Attachment 1

Attachment 1 delineates the major deliverables/milestones for preconceptual Phases I, II, and III.

9.2 Attachment 2

Attachment 2 delineates a logic tied schedule of activities for preconceptual Phase I.

9.3 Attachment 3

Attachment 3 delineates a logic tied schedule of activities for preconceptual Phase II.

9.4 Attachment 4

Attachment 4 delineates a logic tied schedule of activities for preconceptual Phase III.

9.5 Attachment 5

Attachment 5 delineates the SEMP Implementation Diagram for Phase I.

9.6 Attachment 6

Attachment 6 delineates the SEMP Implementation Diagram for Phase II.

9.7 Attachment 7

Attachment 7 delineates the SEMP Implementation Diagram for Phase III.

Attachment 1. Key Team Deliverables and Schedules for Preconceptual Activities

Phase	Deliverable	Date
I	Team Selection	3/12/98
	Systems Engineering Management Plan	3/26/98
	Report summarizing the activities leading to an "initial list" of alternatives and screening criteria for the short list	4/17/98
II	Report summarizing the activities leading to a "short list" of alternatives	5/18/98
	Program Progress Report to DOE HQ	5/18/98
	Develop detailed evaluation criteria weighting factors	5/22/98
	Complete a preliminary Technical Risk Analysis on the short list alternatives	6/5/98
	Complete Programmatic Risk Review and perform a detailed schedule review/mid-course correction	6/22/98
III	Complete preconceptual* design and initial cost estimate	8/15/98
	Provide final report on all activities and preferred alternative recommendation	9/30/98

*Preconceptual design includes configuration controlled design input, e.g., Section 1 of a facility design description (FDD) and key features of the preferred alternative. A Flow Sheet or Process Diagram will be included. Details of design will not be developed during preconceptual activities.

Attachment 2. Logic Tied Schedule for Preconceptual Phase I

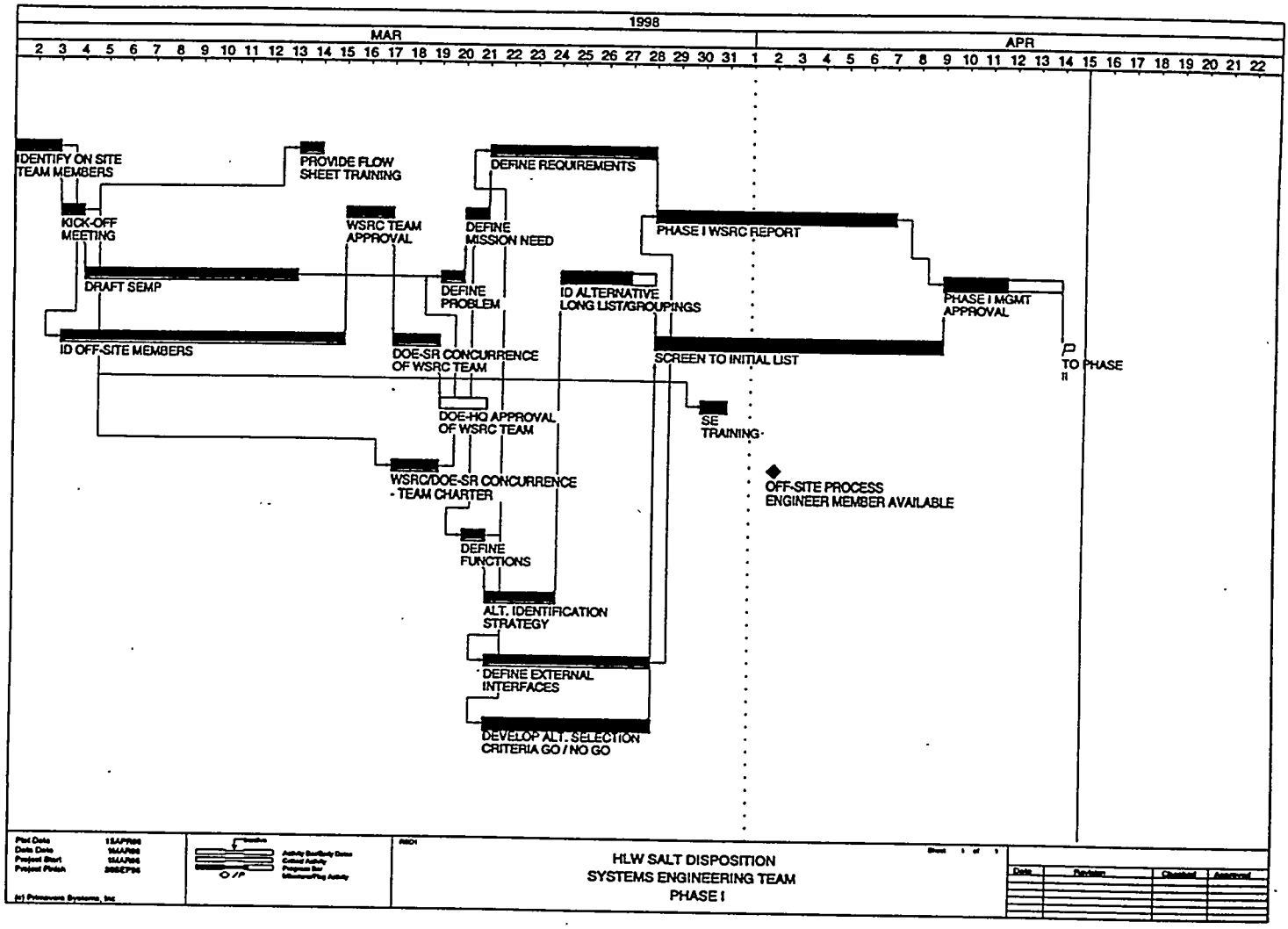

Attachment 3. Logic Tied Schedule for Preconceptual Phase II

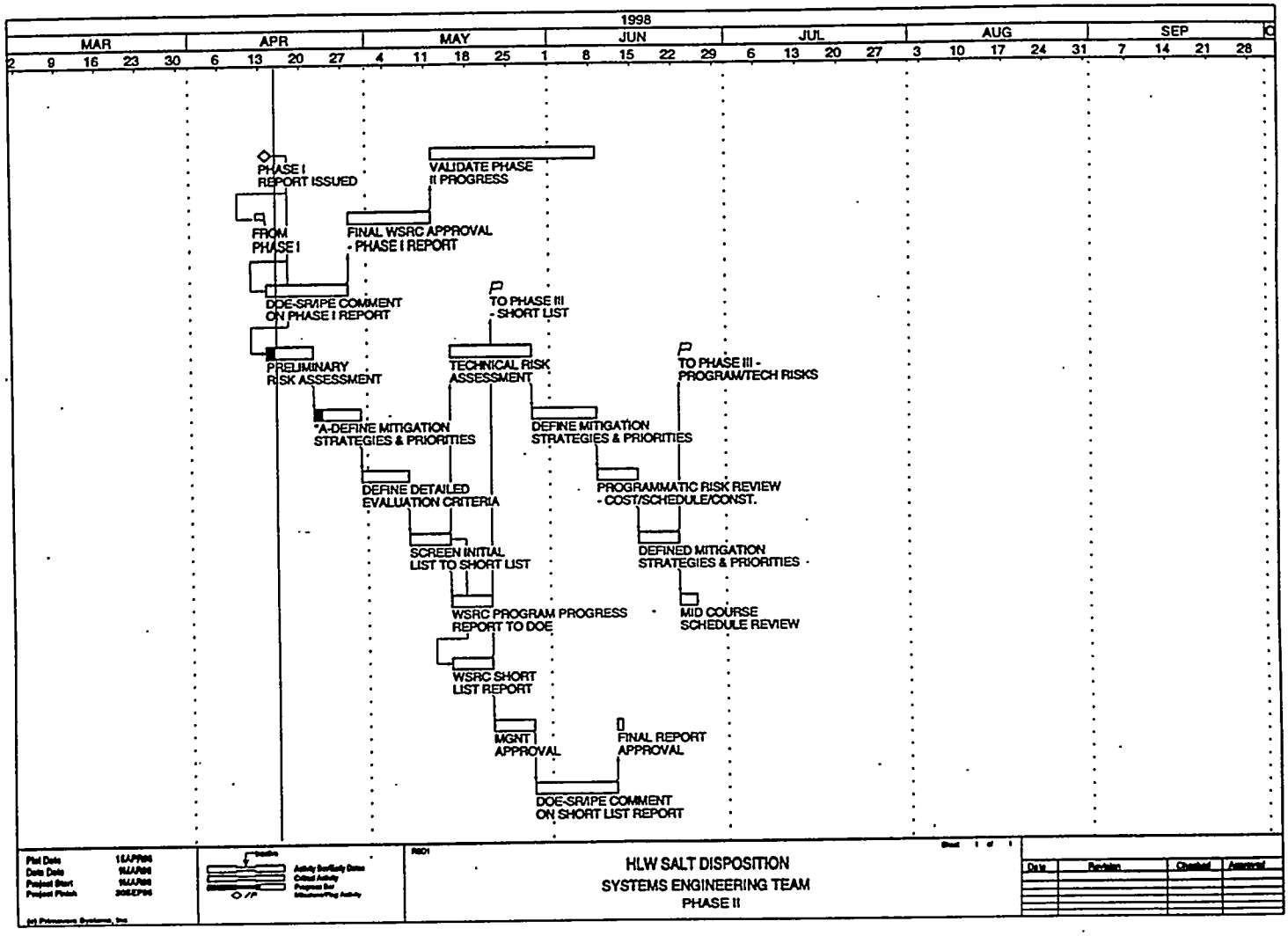

Attachment 4. Logic Tied Schedule for Preconceptual Phase III

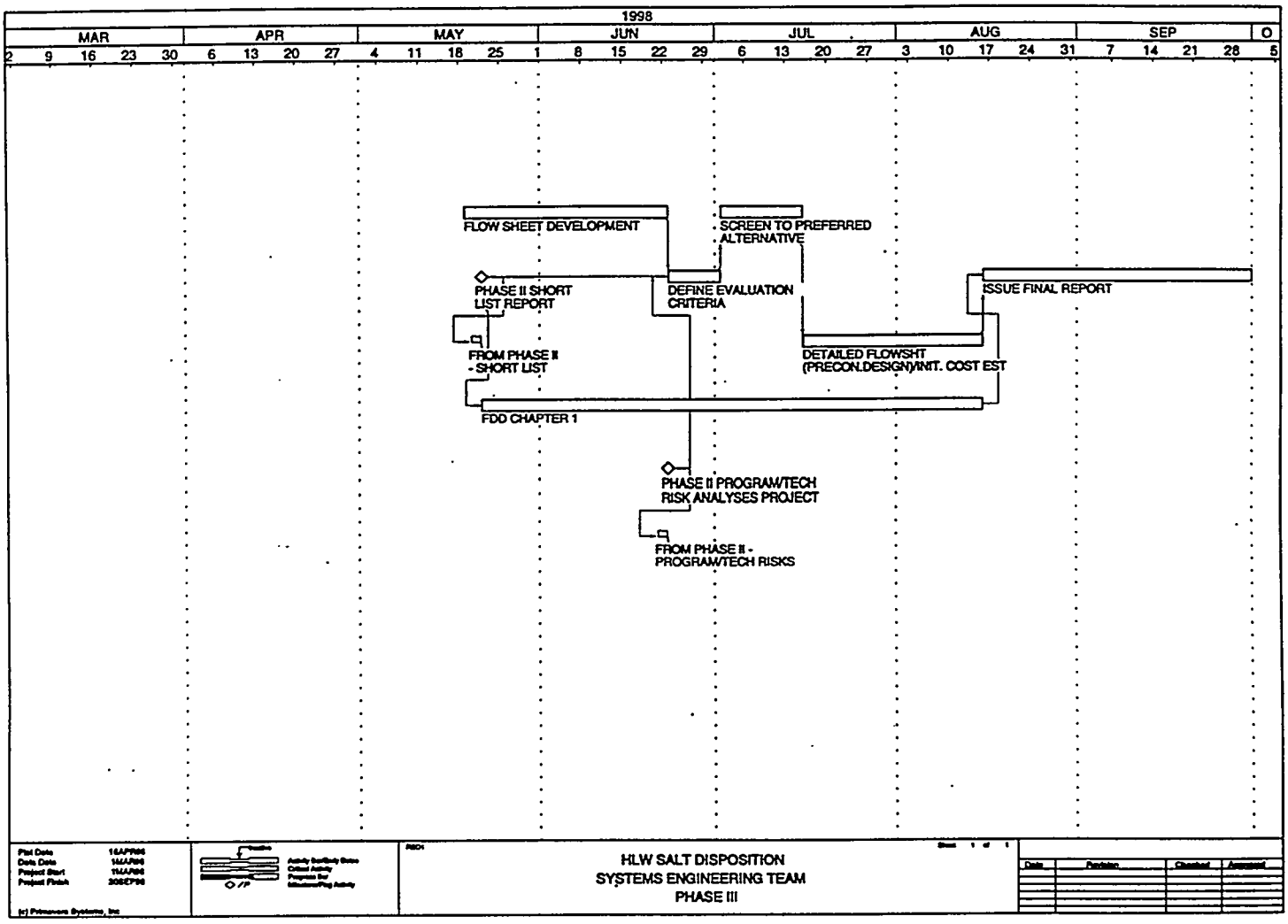

Attachment 5. SEMP Implementation Diagram for Phase I

SYSTEMS ENGINEERING IMPLEMENTATION DIAGRAM PHASE I

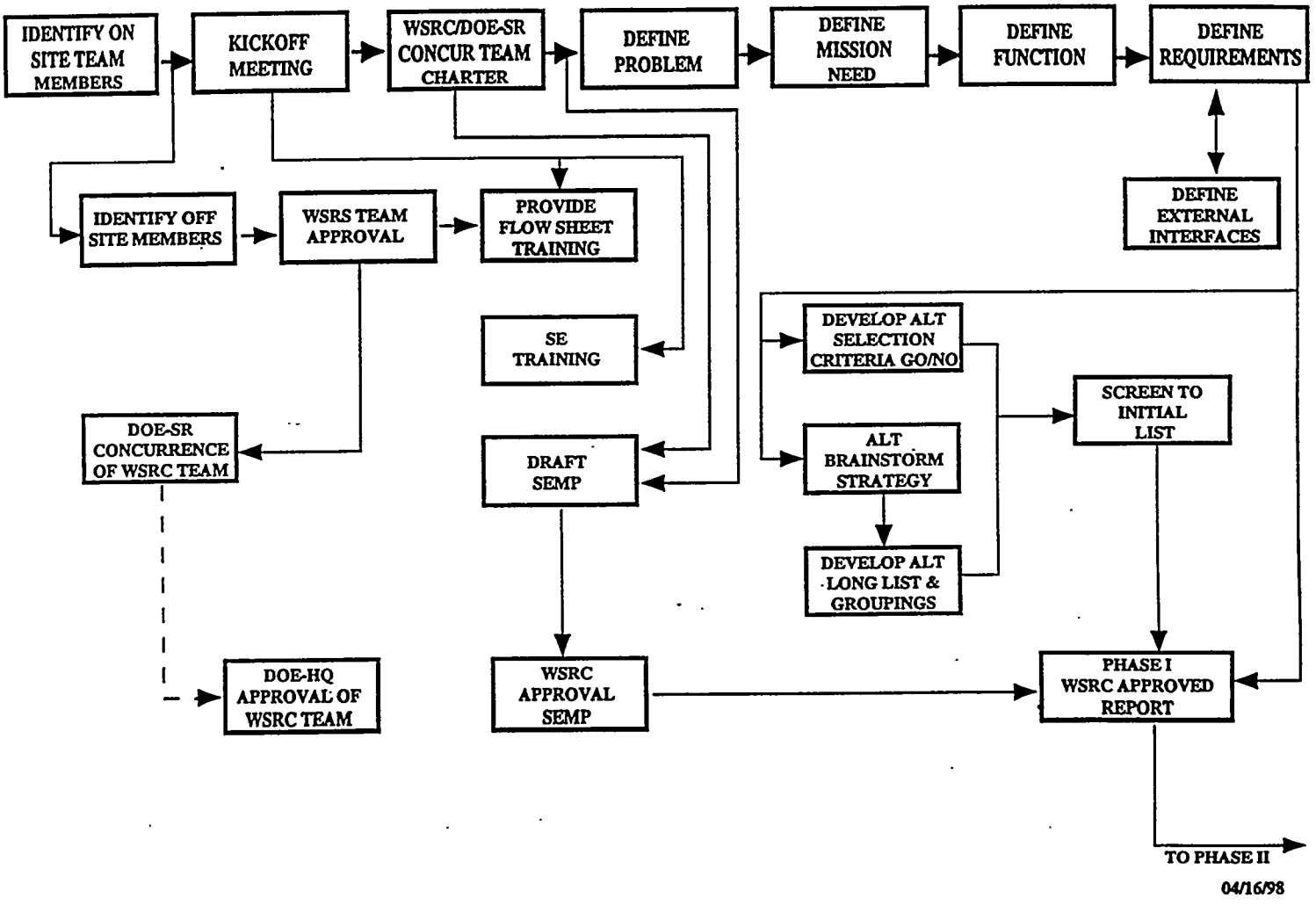

Attachment 6. SEMP Implementation Diagram for Phase II

SYSTEMS ENGINEERING IMPLEMENTATION DIAGRAM PHASE II

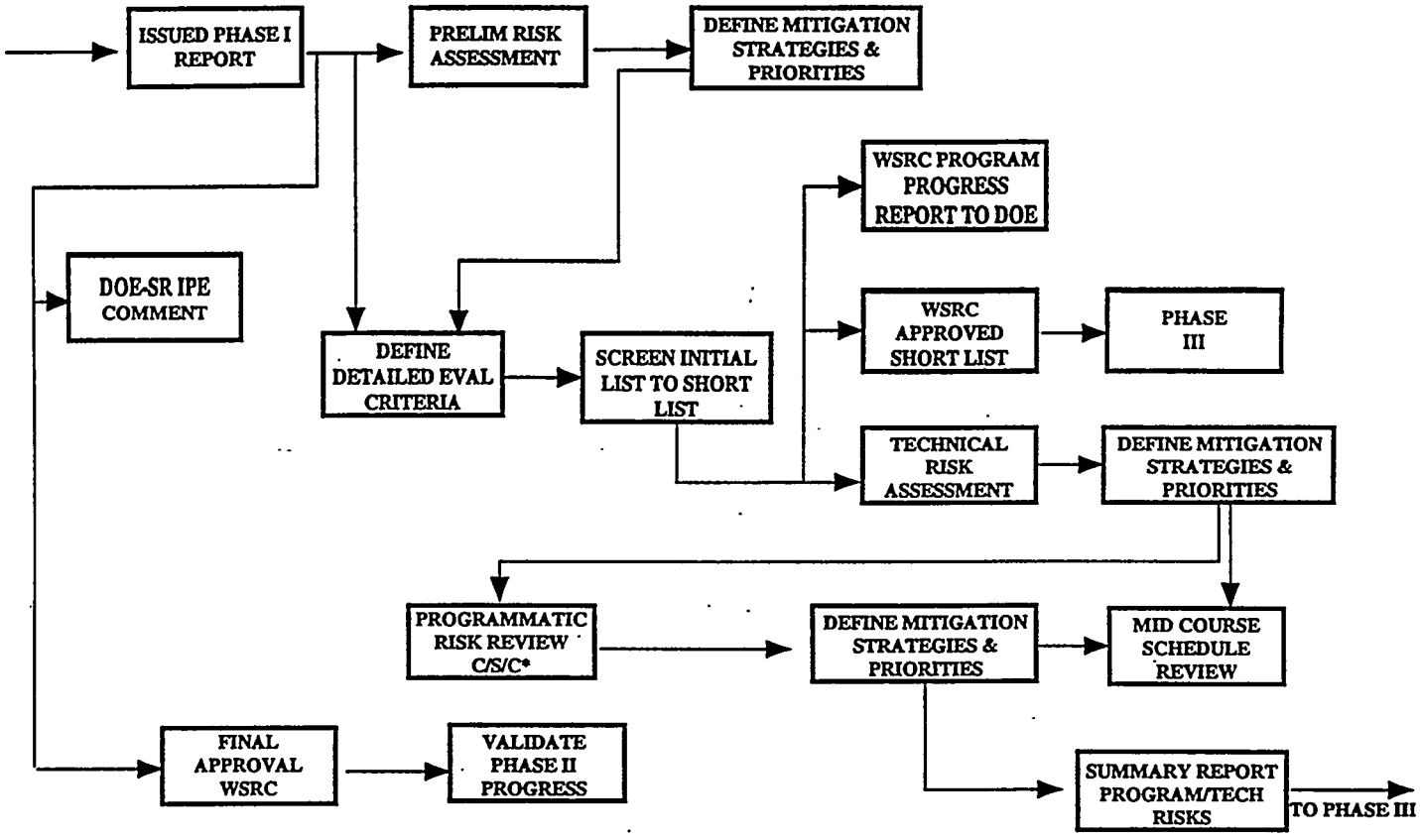

*CSC = COST/SCHEDULE/CONSTRUCTABILITY

04/16/98

Attachment 7. SEMP Implementation Diagram for Phase III

SYSTEMS ENGINEERING IMPLEMENTATION DIAGRAM PHASE III

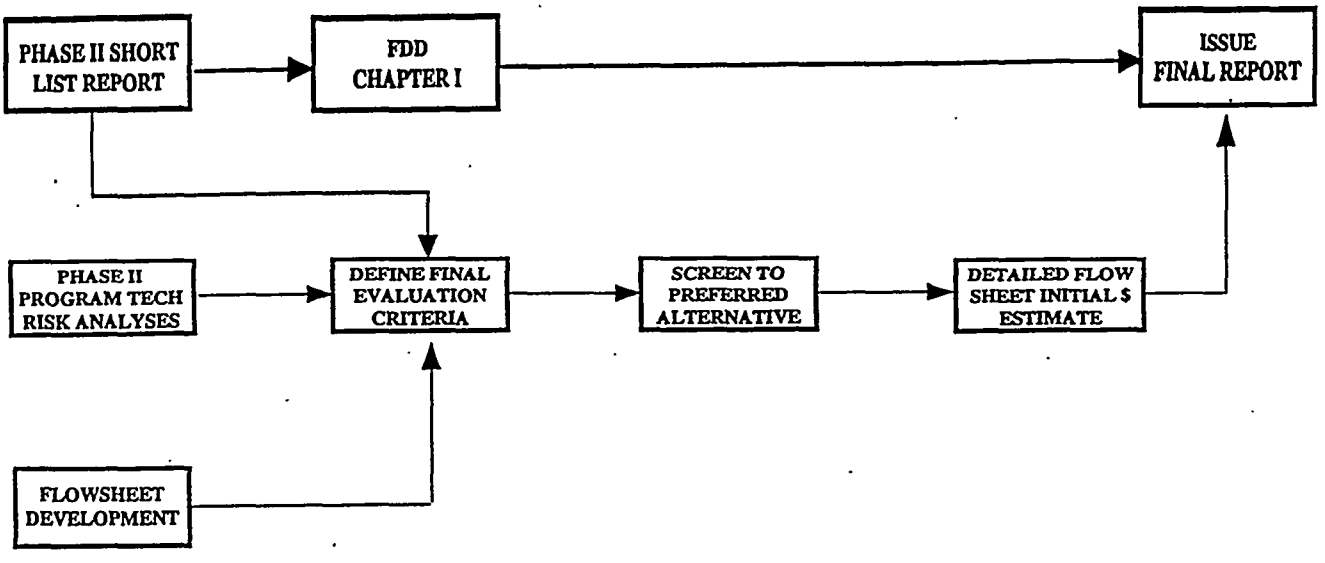

ATTACHMENT 6

High Level Waste Salt Disposition Interface Requirements, Revision C

DRAFT

JTC

HIGH LEVEL WASTE SALT DISPOSITION
INTERFACE REQUIREMENTS

Westinghouse Savannah River Company
High Level Waste Division
Aiken, SC 29808

SAFETY • RESPONSIBILITY • SECURITY
SRS
SAVANNAH RIVER SITE

Table of Contents

1.0 Introduction
- 1.1 HLW System Mission
- 1.2 HLW System Overview

2.0 Production Requirements

3.0 Waste Characterization

4.0 Waste Additions from New Savannah River Site Missions

5.0 Final Waste Disposition and Impacts to Other Facilities
- 5.1 Requirements for Utilizing HLW Division Facilities
  - 5.1.1 H and F Area Tank Farms
  - 5.1.2 Extended Sludge Processing
  - 5.1.3 Salt Pretreatment
  - 5.1.4 Defense Waste Processing Facility
  - 5.1.5 299-H Decontamination Facility
- 5.2 Requirements for Utilizing Solid Waste Division Facilities
  - 5.2.1 Saltstone Facility
  - 5.2.2 Effluent Treatment Facility
  - 5.2.3 Secondary Waste

6.0 References

Appendix A High Level Waste System Functions and Existing Configuration
Appendix B FFA Schedule
Appendix C High Level Waste Tank Inventory Data Base 3/3/98

Approvals

Prepared By:

N. R. Davis

J. R. Fowler

J. T. Carter

H. H. Elder

Technical Review by:

P. D. d'Entremont

R. E. Edwards

P. L. Rutland

T. M. Monahon

W. D. Kerley

M. S. Miller

Approved By:

T. J. Lex

A. B. Scott

1.0 Introduction

The High-Level Waste System is a set of six different interconnected processes (Figure 1-1) operated by two SRS organizations (High Level Waste and Solid Waste Divisions). These processes function as one large treatment plant that receives, stores, and treats high-level wastes from various generators at SRS and converts them into forms suitable for final disposal. The three major forms are borosilicate glass, which will be eventually disposed of in a Federal Repository, Saltstone to be buried on site, and treated water effluent that is released to the environment.

These processes currently include:

1) High-Level Waste Storage and Evaporation (F- and H-area Tank Farms)
2) Salt Processing (In-Tank Precipitation and Late Wash)
3) Extended Sludge Processing
4) Vitrification (Precipitate and Sludge Pretreatment, and Vitrification)
5) Wastewater Treatment (Effluent Treatment Facility)
6) Solidification (Saltstone)

All of these processes are currently processing their respective radioactive materials except The In-Tank Precipitation (ITP) facility. ITP initiated radioactive operation in Tank 48H in September of 1995. During pump operation in December of 1995, benzene evolved from Tank 48H at higher rates than expected, though the operational safety limit was never approached. Investigations revealed the source was apparently benzene generated by the catalytic decomposition of excess sodium tetraphenylborate (NaTPB) added to ensure adequate suppression of cesium solubility.

In August 1996, the Defense Nuclear Facility Safety Board (DNFSB) issued Recommendation 96-1. The DNFSB recommended that operating and testing in the ITP facility not proceed without an improved understanding of the mechanisms of benzene generation, retention, and release. In response to Recommendation 96-1 additional investigations were conducted from August 1996 through January 1998.

These studies indicated that the safe and efficient processing of HLW could not be accomplished in the ITP facility as configured in January 1998. This resulted in a recommendation to the Department of Energy to conduct a systems evaluation of all potential salt (supernate and cake) processing options to determine the most cost-effective process. The salt will remain in storage until an alternative salt pre-treatment process is identified and implemented. Alternative processes will be evaluated throughout 1998. The selected alternative process may be:

- very similar to In-Tank Precipitation;
- an ion exchange processes currently being developed;
- a Cs separation process not previously evaluated; or
- it may be a process that fundamentally changes the planned operation of the HLW System (e.g. by not volume reducing the waste prior to disposal).

Since only a part of the entire HLW system is being evaluated for replacement, the selected alternative must interface safely and efficiently with the remainder of the process facilities. The purpose of this document is to identify the Functional Requirements for interfacing the salt disposition process in the current HLW system. Processing of these wastes in a safe, effective, and environmentally sound manner is critical to accomplishing the HLW System's mission. Nine of the waste tanks have leaked in the past. Twenty-four of the tanks do not meet current regulatory standards. And all of the high-level wastes are prohibited from continued storage under EPA regulations.

1.1 HLW System Mission

The mission of the HLW System is to receive and store SRS high-level wastes in a safe and environmentally sound manner, and to convert these wastes into forms suitable for final disposal. The planned forms are 1) borosilicate glass to be sent to a Federal Repository, 2) Saltstone to be disposed of on site, and 3) treated wastewater to be released to the environment. In addition, various effluents and other miscellaneous wastes are generated that must be managed. Also, the storage tanks and facilities used to process the high-level waste must be left in a state such that they can be decommissioned and closed in a cost-effective manner and in accordance with appropriate regulations and regulatory agreements.

Removal of the waste from the high-level waste tanks is needed to resolve several safety and regulatory concerns. Nine tanks at SRS have leaked observable quantities of waste from primary to secondary containment, and one of these tanks, Tank 16H, leaked a few tens of gallons of waste to the environment in 1960 [1]. Two other tanks, Tank 19H and 20H, have known penetrations above the liquid level, although no waste has been observed to leak through these penetrations. Tanks 1 through 24 do not meet EPA secondary containment standards for storage of hazardous waste, which were effective January 12, 1987[2].

As a result of these concerns, removal of the wastes from tanks 1 through 24 is required by the Federal Facility Agreement for SRS among DOE, EPA, and SCDHEC [3]. As part of the FFA process, DOE has committed to a schedule[4] for removing the wastes from the tanks (See Section 2).

Furthermore, all of the high-level wastes in storage at SRS are Land Disposal Restricted wastes, which are prohibited from storage. Since the planned processing of these wastes will require considerable time and therefore continued storage of the waste, DOE has entered into a compliance agreement with the EPA [5]. This compliance agreement requires processing of all the high-level waste at SRS according to a schedule negotiated between DOE and EPA.

1.2 HLW System Overview

Figure 1-1 schematically illustrates the routine flow of wastes through the HLW System. The various processes within the system and external processes are shown in rectangles. The numbered streams identified in italics are the interface streams between the various processes. The discussion below represents the HLW system configuration as of January 1998[6]. A more detailed description is contained in Appendix A.

Incoming High-Level Wastes (Stream 1) are received into HLW Storage and Evaporation. The function of the Storage and Evaporation process is to safely store these wastes until downstream processes are available for further processing. As an extension of storage, some of the salt wastes are evaporated to a solid saltcake to reduce their volume and mobility (the saltcake is later redissolved with water before being sent on to further processing. The decontaminated overheads from the evaporators are sent to the ETF (Stream 13).

The insoluble sludges that settle to the bottom of waste receipt tanks in Storage and Evaporation are slurried using hydraulic slurrying techniques and sent to Extended Sludge Processing (ESP) (Stream 2). In ESP, sludges high in aluminum are processed to remove some of the insoluble aluminum compounds. All sludges, including those that have been processed to remove aluminum, are washed with water to reduce their soluble salt content. The spent washwater from this process is sent back to the Storage and Evaporation (Stream 3). The washed sludge is sent to DWPF Feed Pretreatment and Vitrification (Stream 4).

Saltcake is redissolved using hydraulic slurrying techniques similar to sludge slurrying. The salt solutions from this operation, and other salt solutions from Storage and Evaporation, are sent to In-Tank Precipitation (ITP) (Stream 5). In ITP, the salt solution is processed to remove radionuclides, which are concentrated into an organic precipitate. The decontaminated supernate is sent to Saltstone. A concentrated organic

precipitate, containing most of the radionuclides, is produced by the process. This precipitate is washed with water to remove soluble salts. However, some soluble corrosion inhibitors (which interfere with DWPF processing) must be left in the precipitate after washing because the precipitate is stored in carbon steel tanks, which are susceptible to corrosive attack by uninhibited precipitate wastes.

In Late Wash, the precipitate (Stream 7) is further washed in stainless steel tanks to reduce the level of soluble corrosion inhibitors to levels acceptable to the DWPF process. The washwater from this process is returned to the ITP process (Stream 8) to be reused in the ITP process.

The washed precipitate from Late Wash is then sent to the DWPF Vitrification building (221-S). In the vitrification building, the precipitate is catalytically decomposed and separated into two streams: a mildly contaminated organic stream, which is sent to storage and eventual organic destruction in the Consolidated Incineration Facility (Stream 11), and an aqueous stream containing virtually all of the radionuclides. The aqueous stream is combined with the washed sludge from ESP, which has undergone further processing (see next paragraph), and the mixture is sent to glass melting.

The washed sludge from ESP (Stream 4) is chemically adjusted in the DWPF to prepare the sludge for feed to the glass melter. As part of this process, a significant amount of mercury is stripped out, which is purified and sent to mercury receivers (Stream 12). The aqueous product from organic decomposition is added to the chemically adjusted sludge. The mixture is then mixed with glass frit and sent to the glass melter. The glass melter drives off the water and melts the wastes into a borosilicate glass matrix, which is poured into a canister. The canistered glass wasteform (Stream 9) is sent to on site interim storage, and will eventually be disposed of in a Federal Repository.

The water vapor driven off from the melter along with other aqueous streams generated throughout the DWPF Vitrification building are recycled to Storage and Evaporation for evaporation, storage, and eventual further processing (Stream 10).

Overheads from the Storage and Evaporation evaporators are combined with overheads from evaporators in the F- and H-area Separations processes and other low-level streams from various waste generators. This mixture of low-level wastes is sent to the Effluent Treatment Facility (ETF). (Stream 13)

In the ETF, these low-level wastes are decontaminated by a series of cleaning processes. The decontaminated water effluent is sent to the H-area outfall and eventually flows to on site creeks and the Savannah River (Stream 14). The contaminants removed from the water are concentrated and sent to Saltstone (Stream 15).

In Saltstone the concentrate from the ETF is combined with the decontaminated supernate from ITP (Stream 6). The liquid waste is combined with cement formers and pumped as a wet grout (Stream 16) to a vault. In the vault, the cement formers hydrate and cure, forming a Saltstone monolith that will eventually be closed as a landfill.

Figure 1-1: HLW System Major Interfaces

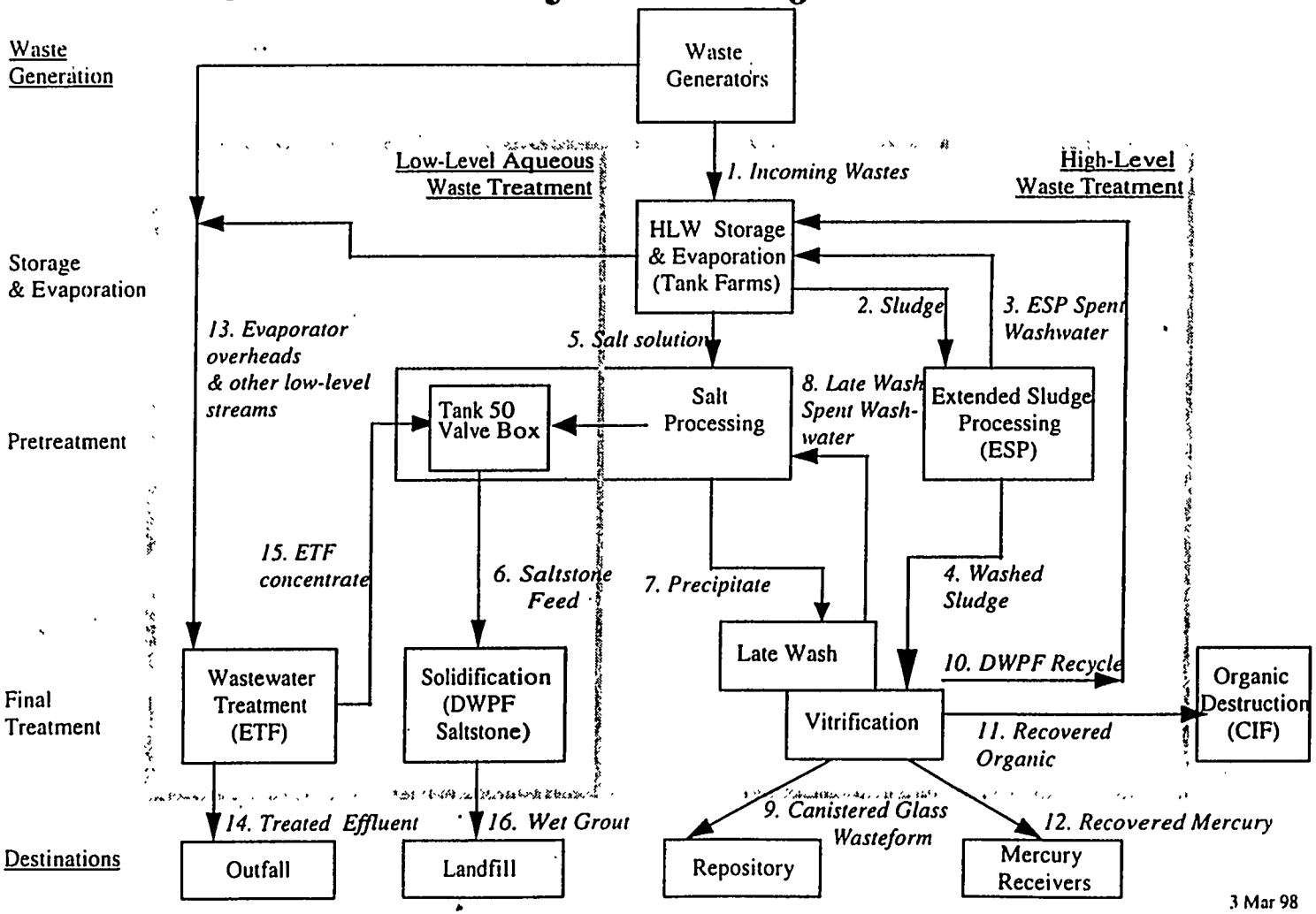

2.0 Production Requirements

The production requirements are derived from the examination of the Federal Facilities Agreement (FFA)[1,3,4,4,1,5], Site Treatment Plan (STP)[7] and Accelerated Clean-up Plan (ACP)[8].

The FFA was executed January 15, 1993 by the DOE, the Environmental Protection Agency (EPA), and the South Carolina Department of Health and Environmental Control (SCDHEC) and became effective August 16, 1993. The FFA provides standards for secondary containment, requirements for responding to leaks, and provisions for removing from service leaking or unsuitable storage tanks. Tanks that do not meet the standards set by the FFA may be used for the continued storage of their current waste inventories, but are required to be removed from service on the schedule recently approved by SCDHEC[4]. This schedule is contained in Appendix (B). The schedule requires the retirement of all the old style (Types I, II, and IV) by 9/31/2020. This schedule recognizes that Tanks 4, 5, 6, 7, and 8 may receive additional supernate inventory in addition to the current inventory. No other old style tanks may receive new waste. Table 3-1 contains the Old Style Tank inventory and FFA waste removal date. Table 3-2 contains the Type III waste inventory. The FFA schedule is the least restrictive of the three production requirements.

The STP for SRS describes the development of treatment capacities and technologies for mixed waste. The STP identifies vitrification in DWPF as the preferred option for treating SRS liquid high level waste. DWPF has met it's STP commitments to submit permit applications, enter into contracts, initiate construction, conduct systems testing, commence operations and submit a schedule for processing backlogged and currently generated mixed waste[9]. In the schedule submitted to SCDHEC on 5/21/96, SRS committed that:

> *"... After the start-up period is complete and DWPF begins full operation, the maintenance of an average of 200 canisters of processed glass per year will be required in order to meet the schedule for removal of backlogged and currently generated waste inventory by the year 2028..."*

The High Level Waste System Plan[9] estimates that a total of 6000 canisters of glass must be produced to immobilize the current and projected waste inventories. The design life of the DWPF melter is 2 years and the current planning basis for time to change the melter is 6 months. Therefore, over the next 30 years 15 melters will be required resulting in 7 years of lost production time. **Requirement:** Any salt disposition facility must be capable of long term production rates of 260 canisters per year for the high level waste system.

The objective of the Accelerated Clean-up Plan (ACP) is to reduce risk and mortgage costs complex wide by accelerating the site clean-up schedules and reallocating funding. SRS has established aggressive goals to remove all waste from the old style tanks by 2006, and process all current and future waste by 2021.

The ACP therefore requires the 6000 canisters to be produced over 22 years. The high level waste system plan requires DWPF a production rate of 200 canisters through 2004, 225 canisters in 2005 and 250 canisters for the remainder of the program. The maximum canister production rate is 250/ year for 16 years, which require 8 melter replacements result in 4 years of lost production. **Goal:** Any salt disposition facility should target a long term production rate of 340 canisters per year for the high level waste system.

Requirement: Consistent with the current facilities design and planning bases for the HLW system the maximum attainment for new facilities shall be no greater than 75%.

3.0 Waste Characterization

The Tank Farm currently contains about 34 million gallons of waste consisting of 3 million gallons of sludge, 15 million gallons of saltcake and 16 million gallons of concentrated salt supernate. This sludge contains about 300 million Curies of radioactivity, primarily Sr/Y-90, while the salt (saltcake and supernate) contains about 134 million Curies, primarily Cs/Ba-137. This waste is the legacy of 35 years of SRS operations. The Separations Canyons and fuel storage facilities contain dissolved fuel and irradiated fuel assemblies that will add somewhat to the legacy waste over the next 4-5 years.
Requirement: All of the existing and future HLW shown in Tables 3-1 to 3-7 must be treated and disposed.

Table 3-1 Old Style Tank Inventory and FFA Waste Removal Date

Tank	Sludge Volume (gal)	Salt Volume (gal)	Free Supernate Vol. (gal)	Sludge, Salt, & Supernate Total Volume (gal)	Interstitial Sludge Supernate Vol. (gal)	Interstitial Salt Supernate Vol. (gal)	Total Supernate Vol. (gal)	FFA Waste Removal Date
1	7,000	480,000	18,957	505,957	4,900	105,600	129,457	3/31/2018
2	4,000	536,000	5,252	545,252	2,800	117,920	125,972	12/31/2016
3	4,000	536,000	374	540,374	2,800	117,920	121,094	9/30/2020
4	127,000	34,000	346,312	507,312	88,900	7,480	442,692	9/30/2020
5	34,000	14,280		34,146		3,141	3,141	9/30/2020
6	25,000		319,712	344,712	17,500		337,212	9/30/2020
7	209,000		157,121	366,121	146,300		303,421	9/30/2020
8	164,000	68,880		164,226		15,153	15,153	9/30/2020
9	4,000	538,000		541,458	2,800	118,360	121,160	3/31/2018
10	4,000	213,000	342	217,342	2,800	46,860	50,002	3/31/2018
11	140,000		199,834	339,834	98,000		297,834	9/30/2005
12	111,110	39,999		112,465		8,799	8,799	3/31/2005
13	223,000		659,350	882,350	156,100		815,450	3/31/2013
14	27,000	156,000		173,950	18,900	34,320	53,220	3/31/2008
15	210,000	98,700	2,450	311,150		21,714	24,164	3/31/2011
16								empty
17								closed
18	42,000		308,106	350,106	29,400		337,506	3/31/2003
19	7,560	13,000	256,622	277,182	5,292	2,860	264,774	3/31/2002*
20								closed
21	14,000		116,980	130,980	9,800		126,780	12/31/2010
22	21,000		808,422	829,422	14,700		823,122	12/31/2010
23	43,000		673,850	716,850	30,100		703,950	3/31/2012
24			275,058	275,058			275,058	3/31/2012
Total	1,420,670	2,727,860	4,148,742	8,166,247	631,092	600,129	5,379,963	

* Bulk waste was removed from Tank 19 in 1986. Waste heel remains to be removed.

Table 3-2 Type III Waste Tank Inventory

Tank	Sludge Volume (gal)	Salt Volume (gal)	Free Supernate Vol. (gal)	Sludge, Salt, & Supernate Total Volume (gal)	Interstitial Sludge Supernate Vol. (gal)	Interstitial Salt Supernate Vol. (gal)	Total Supernate Vol. (gal)
25		1,108,000	162,269	1,270,269		243,760	406,029
26	281,000		361,540	642,541	196,700		558,240
27		463,000	805,268	1,268,268		101,860	907,128
28		1,032,000	187,023	1,219,023		227,040	414,063
29		1,000,000	274,130	1,274,130		220,000	494,130
30	500	65,988	1,087,600	1,154,088	350	14,517	1,102,467
31		1,014,000	245,388	1,259,388		223,080	468,468
32	182,871		1,031,800	1,214,671	128,009		1,159,809
33	39,000	227,000	172,750	438,750	27,300	49,940	249,990
34	25,000	212,000	919,194	1,156,194	17,500	46,640	983,334
35	64,584		1,140,048	1,204,632	45,208		1,185,256
36	150	1,094,000	186,649	1,280,799	105	240,680	427,434
37		973,000	265,679	1,238,679		214,060	479,739
38		893,295	297,648	1,190,943		196,524	494,172
39	92,664		951,912	1,044,576	64,864		1,016,776
40	173,000		702,745	875,745	121,100		823,845
41		1,231,000	9,083	1,240,083		270,820	279,903
42	261,900		349,893	611,793	209,520		559,413
43	58,756	123,084	929,777	1,111,617	41,129	27,078	997,984
44		989,000	280,216	1,269,216		217,580	497,796
45		1,130,000	133,249	1,263,249		248,600	381,849
46		4,000	889,435	893,435		880	890,315
47	248,000	868,000	143,001	1,259,002	173,600	190,960	507,561
48			245,349	245,349			245,349
49			115,128	115,128			115,128
50			364,338	364,338			364,338
51	295,542			247,455	236,433		236,433
Type III Tank Inventory	1,722,967	12,427,367	1,225,114	26,353,301	1,261,821	2,734,021	16,246,956

Table 3-3 Total Tank Farm Inventory

Tank	Sludge Volume (gal)	Salt Volume (gal)	Free Supernate Vol. (gal)	Sludge, Salt, & Supernate Total Volume (gal)	Interstitial Sludge Supernate Vol. (gal)	Interstitial Salt Supernate Vol. (gal)	Total Supernate Vol. (gal)
Type I, II, and III Inventory	1,420,670	2,727,860	4,148,742	8,166,247	631,092	600,129	5,379,963
Type III Tank Inventory	1,722,967	12,427,367	1,225,114	26,353,301	1,261,821	2,734,021	16,246,956
Total Tank Farm Inventory	3,143,637	15,155,227	16,399,856	34,519,608	1,892,913	3,334,150	21,626,919

Table 3-4 shows the approximate total mass of solids in salt waste.

Table 3-4 Mass of Solids in Salt Waste

	Current (Met. ton)	Future (Met. ton)	Total (Met. ton)
Salt in Supernate	39,200	4,000	43,200
Salt in Saltcake	83,200	--	--
Total Mass	122,400	4,000	126,400

3.1 Basis of Waste Characterization

To provide a common basis for the various salt pretreatment options, the total mass of salt solids to be processed has been estimated using the database describing the present waste inventory maintained by High Level Waste Engineering. This estimate is based on the information available for the waste tanks as of March 3, 1998 for the current inventory (See Appendix C).

Future waste compositions are based on forecasted waste volumes used in the HLW System Plan[9] and soluble waste stream compositions for the various waste streams sent to the Tank Farms from the Canyons [10],[11], and an assumed 0.015 M NaOH for DWPF recycle waste, ESP wash water and tank wash water from cleanout and retirement.

ESP Processing also includes the addition of 3 moles of NaOH for each mole of aluminum hydroxide contained in H-Area HHW sludge to reflect additions from aluminum dissolution operations. For purposes of this estimate, 75% of the aluminum hydroxide in the HM HHW sludge is assumed to be converted to sodium aluminate. The caustic and aluminate from this operation will be diverted to the soluble salt pretreatment operations.

Table 3-5 Projected Salt Inventory to Be Processed

Waste Species	Molecular Weight	Current Inventory Supernate (kg)	Current Inventory Salt Cake (kg)	Future Additions Supernate (kg)	Current Inventory Supernate (moles)	Current Inventory Salt Cake (moles)	Future Additions Supernate (moles)	Total Sodium Salts (moles)
Water	18.020	6.248E+07	(c)	5.625E+06	3.467E+09	(c)	3.122E+05	
CsOH	149.910	6.705E+03	(d)	2.970E+02	4.473E+04	(d)	1.982E+00	
KNO_3	101.103	4.064E+05	8.318E+04	4.651E+03	4.020E+06	8.227E+05	4.600E+04	
$NaAl(OH)_4$	118.001	3.663E+06	7.529E+06	9.512E+05	3.105E+07	6.380E+07	8.061E+06	1.029E+08
$Na_2C_2O_4$	133.999	9.670E+04	4.324E+05	4.687E+03	7.217E+05	3.227E+06	3.498E+04	7.967E+06
Na_2CO_3	105.989	2.143E+06	3.328E+06	1.115E+05	2.021E+07	3.140E+07	1.052E+06	1.053E+08
Na_2CrO_4	161.973	9.622E+04	6.296E+04	4.702E+03	5.940E+05	3.887E+05	2.903E+04	2.024E+06
Na_2MoO_4	205.917		1.220E+04	8.159E+02	0.000E+00	5.924E+04	3.962E+03	1.264E+05
Na_2SiO_3	122.033	1.431E+04	1.314E+05	4.016E+03	1.172E+05	1.077E+06	3.291E+04	2.454E+06
Na_2SO_4	142.043	4.443E+05	6.408E+06	9.823E+04	3.128E+06	4.512E+07	6.916E+05	9.787E+07
Na_3PO_4	163.941	1.720E+05	2.508E+05	1.209E+04	1.049E+06	1.530E+06	7.373E+04	7.959E+06
$NaAg(OH)_2$	164.873	3.129E+01	1.874E+02	1.049E+00	1.898E+02	1.137E+03	6.363E+00	1.333E+03
NaCl	58.443	4.876E+04	4.218E+05	7.419E+03	8.344E+05	7.218E+06	1.269E+05	8.179E+06
NaF	41.988	4.177E+04	3.989E+05	1.043E+03	9.947E+05	9.500E+06	2.484E+04	1.052E+07
NaHgO(OH)	256.587	8.932E+03	2.588E+03	6.299E+02	3.481E+04	1.009E+04	2.455E+03	4.735E+04
$NaNO_2$	68.995	6.124E+06	5.224E+06	3.778E+05	8.875E+07	7.572E+07	5.476E+06	1.699E+08
$NaNO_3$	84.995	1.188E+07	4.855E+07	1.206E+06	1.398E+08	5.712E+08	1.419E+07	7.252E+08
NaOH	39.997	1.406E+07	9.790E+06	1.187E+06	3.515E+08	2.448E+08	2.969E+07	6.259E+08
NH_4NO_3	80.043		1.021E+04	5.057E+02	0.000E+00	1.275E+05	6.318E+03	
$CaSO_4$	136.142	2.994E+02	9.856E+02	4.600E-01	2.199E+03	7.239E+03	3.379E+00	
Other Salts	(a)	1.969E+04	3.305E+05					
Insol. Solids	(b)	1.231E+03	2.148E+05					
Total Solids		3.923E+07	8.318E+07	3.973E+06	6.428E+08	1.056E+09	5.953E+07	1.866E+09

(a) Includes soluble salts of trace metals (e.g., Ba, Cd, Cu, Pd, Sn, Tc, Rh, Ru, lanthanides, actinides).

(b) Represents entrained sludge solids; will vary, depending on settling time prior to transfer.

(c) Water in salt tanks included with interstitial supernate; salt cake inventory is based on dry salt.

(d) Bounding total CsOH concentration; based on Total Ci of Cs-137 transferred to the waste tanks.

- Total Solution Volume @ 5.5 M [Na^+] = (1.866E09 moles)/[(5.5 moles/L)(3.785 L/gal)] = 90 million gallons.
- Total Solution Volume @ 5.0 M [Na^+] = (1.866E09 moles)/[(4.5 moles/L)(3.785 L/gal)] = 99 million gallons.
- Total Solution Volume @ 4.5 M [Na^+] = (1.866E09 moles)/[(4.5 moles/L)(3.785 L/gal)] = 110 million gallons.

Chemical Composition

The composition and mass of various components in the soluble salts in the waste to be processed are summarized in Table 3-5 for existing supernate, existing salt cake and future waste from forecasts. Although existing supernate in inventory is about 8.5 M sodium, the concentration in feed to salt pretreatment can not be maintained at this concentration for the entire processing of the existing inventory, due to variations in solubility for the various waste components. For the ITP process, the projected overall average for the inlet feed used as a basis for design and forecasting is 4.5 to 5.5 M, with an average of 5.0 M assumed. The byproduct decontaminated salt solution sent to Z-Area for disposal from ITP is projected to range from 4.0 to 5.0 M sodium, depending on the amount of precipitate washing that is required, with an average of 4.5 M sodium assumed. Total waste volumes to be processed for various sodium concentrations are also shown on Table 3-5.

Curie Content

Except for Cs-137 and Ba-137m, limited data is available for various longer-lived radionuclides present in the waste. Bounding soluble concentrations for other isotopes in supernate, principally the transuranics have been estimated to provide a basis for disposal of solid waste generated from tank farm operations. The projected inventory for these radionuclides are shown in Table 3-6. Corresponding concentrations in supernate diluted to 5.5 M sodium, which would bound solutions prepared from salt dissolution, are shown in Table 3-7

Table 3-6 Curie Content of Current Supernate

Nuclide	Total Ci	Nuclide	Total Ci	Nuclide	Total Ci
Co-60	8.5	Ba-137	110,000,000	Pu-238	36,000
Sr-90	29,000	Th-232	0.067	Pu-239	3,400
Y-99	29,000	U-232	0.060	Pu-240	920
Tc-99	5,200	U-233	2.3	Pu-241	23,000
Ru-106	2,600	U-234	1.6	Pu-242	0.82
Rh-106	2,600	U-235	0.12	Am-241	31,000
Sb-125	1,400	U-236	0.24	Am-242m	11
Sn-126	50	U-238	6.5	Cm-244	150
Cs-137	120,000,000	Np-237	4	Cm-245	0.0012

Table 3-7 Bounding Curie Concentration of Current Supernate @ 5.5 M Na^+

Nuclide	Ci/gal	Nuclide	Ci/gal	Nuclide	Ci/gal
Co-60	2.6E-07	Ba-137	3.4	Pu-238	1.1E-03
Sr-90	8.9E-04	Th-232	2.1E-09	Pu-239	1.0E-04
Y-99	8.9E-04	U-232	1.8E-09	Pu-240	2.8E-05
Tc-99	1.6E-04	U-233	7.1E-08	Pu-241	7.1E-04
Ru-106	8.0E-05	U-234	4.9E-08	Pu-242	2.5E-08
Rh-106	8.0E-05	U-235	3.7E-09	Am-241	9.5E-04
Sb-125	4.3E-05	U-236	7.4E-09	Am-242m	3.4E-07
Sn-126	1.5E-06	U-238	2.0E-07	Cm-244	4.6E-06
Cs-137	3.7	Np-237	1.2E-07	Cm-245	3.7E-11

4.0 Waste Additions from New Savannah River Site Missions

In the aftermath of the Cold War, the Savannah River site has taken the lead in waste disposition. Therefore the site is being considered for several potential new missions. The scope and variety of these potential new missions makes planning very difficult.

The majority of these potential new missions create very little impact on the salt inventory or volume. An example is the processing of Pu scrap and residue. This is a very small stream with minimal sodium salts. Other potential new missions could create significant amounts of traditional HLW. An example of this would be the processing of all aluminum clad fuels in the DOE Complex at SRS. The potential additional new waste from such a mission can not be forecasted with today's information. Applicability of missions such as these will be considered on a case by case basis after the selection of a salt disposition process. Considerations for this waste should not impact the design or capacity of salt pre-treatment alternatives. This is acceptable because:

- the waste from virtually all of the potential new missions can be either diluted or controlled to resemble existing waste if needed;
- many of the potential new missions will generate very low quantities of typical waste;
- the various HLW facilities should be able to improve and thus sustain production rates higher than what is planned to enable additional waste to be processed without extending the program; and the duration of the HLW Program could be extended if required

One mission that can impact the salt disposition process selection is excess plutonium disposal. The United States has taken the lead in technology development for fissile materials disposition to promote global non-proliferation. In support of this mission, the U. S. Department of Energy's (DOE) Office of Fissile Materials Disposition (OFMD) has been charged with providing technical support for evaluation of options for the disposition of the excess fissile materials manufactured under the nation's defense programs.

One option for plutonium disposition is immobilization using the can-in-canister concept. In this process, plutonium will be immobilized in a crystalline ceramic form and placed in small stainless steel cans. Several of these cans will then be placed in a rack which will be positioned in a large stainless steel canister. The large canister will then be filled with high-level radioactive waste glass which will surround the small plutonium bearing cans. The high-level waste glass would act as a high radiation barrier and, thus, satisfy non-proliferation requirements.

The National Academy of Sciences (NAS) recommended that the national objective should be to make the surplus plutonium "roughly as inaccessible for weapons use as the much larger and growing quantity of plutonium that exists in spent fuel from commercial reactors [31]." This state of inaccessability defined by the NAS became known as the Spent Fuel Standard. Therefore, in addition to traditional requirements for immobilized forms to achieve isolation of the radionuclides from the biosphere, the immobilized plutonium form must also achieve a degree of inaccessiblity and difficulty of plutonium recoverability to be comparable to typical commercial spent fuels [32]. Based on these definitions, the requirements for the can-in-canister assemblies to meet the standard can be summarized as follows:

- A high radiation dose through the use of fission products to achieve doses >100 rem/hour one meter from the canister surface 30 years after fabrication
- A large and heavy integral assembly making it impossible for an individual to move without the aid of heavy equipment
- A dilute distribution of plutonium-bearing materials within the solid matrix containing the fission products
- A higher concentration of heavier plutonium isotopes as compared to typical weapons-grade plutonium.

5.0 Final Waste Disposition

Requirement: All salt disposition proposals are to be "closed cycle", meaning that all process streams and secondary wastes shall have a final disposal option which complies with all applicable state and federal regulations.

These proposals may elect to interface with the four existing SRS facilities.

5.1 Functions and Requirements for Utilizing HLW Division Facilities

The high level waste division provides for the storage, pre-treatment and conversion of HLW into wasteforms suitable for disposition in a geologic repository. The requirements to use these facilities are identified below.

5.1.1 H and F Area Tank Farms

The HLW Storage and Evaporation Process **Function** is storage of high-level waste in a safe and environmentally sound manner until downstream processes are available to process the waste into forms suitable for final disposal.

Once downstream processes are available to process a tank of waste, the waste is removed from the tanks and sent for further processing.

Requirement: HLW Storage and Evaporation must receive Incoming Wastes from a number of sources, including:

- F-Canyon (Separations, including outside facilities)
- H-Canyon (Separations, including outside facilities)
- The Receiving Basin for Offsite Fuels (RBOF) and the Resin Regeneration Facility (RRF) (These two facilities are located in the same building, and the waste from them is often mixed before transfer to Storage and Evaporation)
- Reactor Areas
- Savannah River Technology Center (SRTC)
- Analytical Laboratory facilities
- Other site facilities
- Waste generated from decommissioning of tanks or other facilities

Requirement: The HLW Storage and Evaporation process must receive the following recycle streams from within the HLW System:

- Spent decontamination solutions from the Tank Farm Maintenance Facility (299-H)
- Spent Washwater from Sludge Processing
- Recycle from the Defense Waste Processing Facility (DWPF)
- Highly Contaminated Cooling Water or Storm Water
- Highly Contaminated ETF Concentrate

This section describes the requirements for acceptance of waste into the Storage and Evaporation. All of the streams mentioned in the previous section are received into waste tanks for storage and are subject to the same requirements except where specified below.

Requirements for Corrosion Prevention[12]

The HLW storage tanks and cooling coils within the tanks are composed of carbon steel and are susceptible to general corrosion, nitrate induced stress corrosion cracking, and pitting corrosion.

Waste solutions to be transferred into Storage and Evaporation must be alkaline and must be inhibited to prevent corrosion of carbon steel. Also, concentrations and volumes of incoming wastes must be controlled so that when two or more incoming wastes are combined in a waste tank the resultant mixture is also within limits. **Requirement: The corrosion limits specified below must be met.**

pH shall be greater than 9.5

Minimum Inhibitor Contents For all Waste Generators except DWPF:

For $5.5M < (NO_3^-) \leq 8.5$ M:		$(OH^-) \geq 0.6$ M
	and	$(OH^-) + (NO_2^-) \geq 1.1$ M
For $2.75 M < (NO_3^-) \leq 5.5$ M:		$(OH^-) \geq 0.3$ M
	and	$(OH^-) + (NO_2^-) \geq 1.1$ M
For $1.0 M < (NO_3^-) \leq 2.75$ M:		$(OH^-) \geq 0.1 * (NO_3^-)$
	and	$(OH^-) + (NO_2^-) \geq 0.4 * (NO_3^-)$
For $0.02 M < (NO_3^-) \leq 1.0$ M:		$(OH^-) \geq 1.0$ M
	or	$(NO_2^-) \geq 1.66 * (NO_3^-)$
For $(NO_3^-) \leq 0.02$ M:		$(OH^-) \geq 1.0$ M
	or	$(NO_2^-) \geq 0.033$ M

Note: all concentrations are in moles/liter of supernate, and (OH^-) refers to free hydroxide.

Minimum Inhibitor Contents For Waste Generated by DWPF:

For $1.0 M \leq (NO_3^-)$:		see above
For $0.1 M \leq (NO_3^-) < 1.0$ M:		$(OH^-) \geq 1.0$ M
For $0.01 M \leq (NO_3^-) < 0.1$ M:		$(OH^-) \geq 0.5$ M
	and	$(NO_2^-) \geq 3.17 * (NO_3^-) - 0.0192$
For $(NO_3^-) < 0.01$ M:		$(OH^-) \geq 0.5$ M
	and	$(NO_2^-) \geq 0.0013$

Note: all concentrations are in moles/liter of supernate, and (OH^-) refers to free hydroxide.

Maximum Concentrations of Corrosive Species - TSR

The waste's supernate phase is limited to (these concentrations may occur simultaneously):

- $(Cl^-) \leq 0.11$ M;
- $(F^-) \leq 0.086$ M (the concentration of uncomplexed fluoride);
- $(NO_3^-) \leq 8.5$ M; and
- $(SO_4^{=}) \leq 0.18$ M.

Requirements for Prevention of Accumulation of Flammable and Explosive Components[12]

Ammonia: In the presence of free hydroxide ammonium nitrate forms ammonium hydroxide, evolving ammonia gas, which is flammable at greater than 14.5 vol% in dry air. **Requirement:** The ammonia must be limited to so that the ammonia contribution to the CLFL is less than 10%.

Organic Compounds: Organics entering the Tank Farm have the potential to float.to the surface of the aqueous waste and present a fire or explosion hazard. **Requirement:** The concentration of all organics entering the Tank Farm is limited to 0.5 vol% insoluble organics (determined by freon extraction).

Requirement: Volatile flammable species in the waste stream shall be characterized, and the vapor in equilibrium with the liquid waste shall not be flammable and must be maintained below 25% of the Composite Lower Flammability Limit (CLFL). Note: The liquid and vapor compositions are those of the waste itself, irrespective of the eventual composition of the tank farm waste tank that receives the waste.

Requirement: Hydrogen from radiolysis must be no greater than 8.9E-4 gallons of hydrogen per gallon of waste per hr.

Requirement: Liquid Waste Temperature shall not exceed 70°C if received into an "organic" designated pump tank.

Shock Sensitive Compounds: In 1970, popping noises were heard when dried waste deposits in the tank 21 feed jet enclosure and the 242-H evaporator cell were disturbed by personnel and/or equipment. Investigation of the incident revealed that silver was present in the waste feeding the evaporator and probably formed silver nitride, a shock sensitive compound. The silver was present due to flushes of the silver coated Berl saddles used in the canyons to remove I-129. **Requirement:** No waste may be received into the Tank Farms that contains silver, except for silver present as a fission product and small quantities from laboratory and/or analytical methods.

Radiological Source Term for Waste Transferred to Type IV Tanks[12]

Requirement: The concentration of waste transferred into type IV tanks shall be no greater than 3.2E6 rem_{inh}/gallon. The purpose of this limit is to reduce the risk of leakage. The type IV tanks have no secondary containment, so the probability that leakage from a type IV tank will reach the environment is higher than for a leaking primary on the other types of tanks. The purpose of the control is to limit the consequence of leakage, so that the total risk (probability times consequence) is acceptable.

Radiological Source Term Criteria for non-Type IV Waste Tanks

Requirement: The composite (solids and liquids) dose potential concentration must be less than 2.3E9 rem_{inh}/gallon to be received in the Tank Farm. **Requirement:** the settled solids must have a dose potential concentration less than 4.5E9 rem_{inh}/gallon.

Transfer Line Radiological Receipt Criteria [12]

Requirement: The following criteria must be met for using the existing transfer piping within the Tank Farm.

A. Waste transfer lines with secondary containment that are seismically qualified may have a dose potential as high as 2.3E9 rem_{inh}/gallon.

B. Waste transfer lines with secondary containment that are not seismicaly qualified must have a dose potential concentration <3E6 rem_{inh}/gallon.

C. Waste transfer lines with single containment must have less than 0.05 Ci total activity per gallon and a dose potential concentration <3E6 rem_{inh}/gallon.

Requirements for Regulatory Compliance[12]

Requirements: No RCRA listed hazardous wastes (i.e., wastes listed in the subpart D lists of 40 CFR 261) may be received into the Tank Farm except as noted below. The "Mixed Waste Site Treatment Plan" lists the species that are allowed to exceed the TCLP criteria:

Characteristic	TCLP Code
Corrosivity	D002
Ba	D005
Cr	D007
Pb	D008
Hg	D009
Ag	D011 (except see Section limitation)
Benzene	D018

Characteristically hazardous wastes (Subpart C wastes) are acceptable for the characteristics listed in Tank Farm permits and regulatory agreements (such as the Federal Facility Compliance Agreement).

The prohibition on acceptance of RCRA listed hazardous waste is imposed to ensure that any waste received into Storage and Evaporation can be processed through downstream processes. Reviews of waste currently in storage have shown that no listed wastes have historically been sent to the tank farm. Although small quantities of laboratory chemicals on the hazardous waste lists have been received in the Tank Farms, in all cases the disposal of these chemicals was covered by various RCRA exemptions and did not generated a listed hazardous waste.

Although the Tank Farm permits allow receiving listed hazardous wastes, the permits for DWPF Glass and Saltstone, which will process all the wastes from the Tank Farms, do not allow processing of listed hazardous wastes. This is because DWPF, Saltstone, and ETF are permitted to produce only non-hazardous products (glass, Saltstone, and treated water, respectively). EPA and SCDHEC regulations specify that any products derived from a listed waste are also considered hazardous waste.

Requirements for Criticality Safety[12]

Waste received in the Storage and Evaporation must be sufficiently low in fissile material concentration or sufficiently high in neutron poisons to prevent a criticality. **Requirement:** The safe weight ratio for neutron poison provided below must be met.

Single Neutron Poison	Required Weight Ratio to Equivalent U-235
Cr	66
Fe	76
Mn	30
U-238	103

Requirements for SAR Source Term Comparison[13]

The Tank Farm SAR contains tables of source terms--assumed concentrations of radionuclides in Storage and Evaporation wastes. These source terms are used in SAR accident analysis and are part of the authorization basis for Storage and Evaporation. **Requirement:** Incoming wastes must be within the concentrations specified in the Tank Farm SAR source term.

5.1.2 Extended Sludge Processing

The **Function** of ESP is to reduce the concentrations of aluminum, soluble salt and insoluble solids in the sludge fed to DWPF for vitrification in order to reduce the total number of canisters produced This section is provided for information only. No requirements for salt processing are derived directly from ESP. Any streams proposed for disposition in DWPF must be meet the glass processing limits after the inclusion of the sludge stream. It is therefore important to understand the limited role of ESP in modifying the composition of the sludge. The ESP wastewater volume and composition has been included in waste characterization section. While there are several short term processing routes for this stream, ultimate disposal will be by the selected salt disposition process.

The Aluminum content is partially determined by the dissolution process, which has a relatively high efficiency for that part of the total aluminum which is susceptible to dissolution. Other forms of aluminum are not affected by the aluminum dissolution operating conditions. Thus the overall Aluminum removal efficiency and the Aluminum content of ESP's product is partially determined by the blending provided by the waste removal schedule. The allowable aluminum content is limited by the DWPF feed design bases to ensure the molten glass has a satisfactory rheology. If the aluminum is outside of these limits, this will increase the number of canisters at DWPF and increase the cost of processing.

The insoluble solids content is controlled by the extent that the sludge is allowed to settle for the final decant operation. If the wt% solids is too high, then the slurry's rheology could be stiff enough to make it difficult to pump from Tank 51H or 40H to DWPF. As the wt% solids decreases, then DWPF requires additional time to process the same amount of solids (i.e., more boiling is required in the Slurry Receipt Adjustment Tank). Also, the water content of the sludge slurry sent to DWPF is all returned back to the Storage and Evaporation in the DWPF recycle stream. The slurry and transfer pumps will leak some of their bearing water into the feed tank, gradually diluting the wt% insolubles. This dilution may require that additional supernate be decanted periodically. Each decant would require a process outage to allow several weeks for the sludge to settle, and would change the salt content of the sludge (i.e., the ratio of insoluble:soluble solids).

Wash Water Disposition Alternatives

The supernate decanted after Aluminum dissolution can be sent to various destinations depending on the composition and various production planning needs:

- It can be fed to the HLW evaporators, but the high hydroxide content will limit the evaporator's volume reduction factor (the Aluminum dissolution supernate will not crystallize well).
- The high hydroxide content would actually be desirable for dissolving salt to feed pretreatment.
- Depending on its salt and radionuclide content, the supernate can be fed directly to pretreatment, e.g., if the salt processing effluent meets the Z-area waste acceptance criteria for Ru-106.

Decanted spent washwater can also be sent to various destinations, depending on the composition and various production planning needs:

- It can be fed to the HLW evaporators.
- The initial decants, which will contain a large amount of salts, can be used to slurry sludge for the next ESP batch.
- Depending on its salt and radionuclide content, the supernate can be fed directly to salt pretreatment
- Each subsequent decant will contain a decreasing amount of salt, and later decants can be used to dissolve salt to feed pretreatment.
- Dilute decants can be held for reuse as makeup washwater in the initial washes of the next sludge batch.

5.1.3 Defense Waste Processing Facility

The **Function** of the DWPF is to process both the washed precipitate and sludge to produce a stable waste form, borosilicate glass by "vitrification". This glass is poured into canisters so that if can be shipped to a Federal Repository for final disposition.

Process proposals, which interface with the DWPF must be compatible with DWPF's Authorization Basis, design basis, materials and capacity. The feed(s) must produce an ACCEPTABLE waste form (glass) when combined with plausible glass frits (solid glass forming additives) and the HLW sludge feed. Any aqueous recycle stream must meet the Waste Acceptance Criteria for the HLW Tank Farms. Air emissions must comply with SCDHEC permitted limits.

The canistered waste form (the glass plus the canister) is the principle product of the DWPF. The DOE has specified the requirements for the canistered waste form in the Waste Acceptance Product Specifications (WAPS).[14] The specifications apply to the canister itself, to the integrity/cleanliness of the canister, and to the glass. The DWPF Waste Form Compliance Plan (WCP) details the strategies for meeting the specifications and the multi-volume Waste Form Qualification Report (WQR)[15] contains the objective evidence supporting our ability to meet the WCP. The Glass Product Control Program (GPCP), which is a part of the WQR, details the strategies used to ensure that glass property requirements are met through control of the melter feed composition. Items and activities important to the DWPF's ability to comply with the WAPS are identified and maintained in the DWPF Waste Acceptance Reference Manual.[16]

Air Emissions

The DWPF operates under an air permit from South Carolina SCDHEC.[17] The permit limits emissions of mercury, benzene, NO_X, and CO, of which mercury, benzene and NO_X are monitored. The sources for these compounds are the LWF (benzene), the SCVC (benzene and mercury), the FAVC (mercury, NO_X, and benzene), the OGCTC (mercury, NO_X, and CO), and the OWST (benzene). The EPA permits radionuclide emissions from the DWPF ventilation system.

Emissions from the various sources are determined and/or controlled as follows:

- Benzene emissions from the LWF are primarily determined by the dissolved benzene in the precipitate as received from Tank 49H,
- SCVC benzene and mercury emissions are a function of the air inleakage, the inert purge requirements and the operating temperature of the SCVC.
- NO_X emissions (both from the FAVC and the OGCTC) are determined by the nitrite and nitrate in the feeds (precipitate and sludge) and by the amount of nitric acid added in the DWPF (which depends on the hydroxide, mercury, and manganese in the sludge feed).
- The benzene from the FAVC is determined by the amount of benzene and benzene precursors in the PHA.
- Mercury from both the FAVC and OGCTC is determined by the non-condensable flow and the FAVC operating temperature.
- Carbon monoxide from the OGCTC is a function of the carbon fed to the melter and the completeness of combustion.
- The OWST benzene emissions are limited by the floating roof in the tank.

Nitrates and nitrites, primarily from the sludge, result in NO_X emissions during SRAT processing and from the melter. Hydroxides and carbonates in the sludge affect NO_X emissions by requiring addition of nitric acid in the SRAT. Essentially all these anions are water soluble and are directly controlled by the amount of washing performed in ESP, ITP, and LWF.

Requirement: Non-Radioactive chemical emissions are limited to the currently permitted values 29.23 Tons/annum for benzene, 0.88 Tons/annum Hg, 58.31 Tons/annum NOx (as NO2), 78.84 Tons/annum CO, 0.05 Tons/annum particulates.

Requirement: Radioactive releases are limited to the design basis emission of 3 mCi per annum. In addition the site dose limit (as contained 40CFR61.92) is 10 mrem.

DWPF Shielding Design (Gamma / Neutron)

The shielding for the DWPF was designed based on 5 year out-of-reactor blended sludge and 15 year out-of-reactor saltcake. **Requirement:** The sludge to be transferred to DWPF must not exceed a gamma source strength value of 2.4E+03 mR/hr/gal [18]. The gamma source strength value provides a common means for comparing the radionuclide distribution assumed in the DWPF design basis and the variable radionuclide feed concentration in the high level waste. **Requirement:** The salt must not exceed a gamma source strength value of 1.8E+04 mR/hr/gal [18].

The neutron production rate in the DWPF sludge waste feed has been evaluated due to neutron exposure concerns involving the use of the Shielded Canister Transporter (SCT). **Requirement:** The total alpha curies per gram solids value for sludge feed to DWPF is limited to 1.5E-03 Ci/g insoluble solids [18]. The salt feed has a negligible contribution to neutron shielding at DWPF.

Requirements for Inhalation Dose Potential

The DWPF Safety Analysis Report evaluates the consequences of certain accident scenarios based on estimated precipitate and sludge feed compositions. Design-basis concentrations of specific radionuclides in the precipitate and sludge feed streams have been given in the DWPF SAR [19]. **Requirement:** The composite inhalation dose potential concentration must be less than 7.1E+08 rem/gal for the sludge stream and less than 9.7E+06 rem/gal for the precipitate stream.

Requirements for Criticality Safety

Both sludge and precipitate received at DWPF must have a low concentration of fissile material or an abundance of neutron poisons to prevent a criticality. **Requirement:** The weight ratios of neutron poisons Fe or Mn to equivalent plutonium (to ensure the sludge stream is inherently safe) shall be greater than 160:1 or 64:1 respectively.[20]

Requirements for Prevention of Accumulation of Flammable Vapors[20]

Requirement: To Prevent the accumulation of flammable vapors the following limits shall be met.

- Hydrogen production in the SRAT shall not exceed 0.65 pph for [illegible]00 gallons of SRAT product.
- Nitrous Oxide concentration in the SRAT vapor space shall not exceed 15 volume %.
- Hydrogen production in the SME shall not exceed 0.223 pph for 6000 gallons of SME product.

Borosilicate Glass

WAPS requirements that apply to the glass itself are glass durability (leachability), minimum canister fill limits, and required reporting of estimated radionuclide inventory and heat generation rates based on composition.

Glass Durability[14]

Requirement: The product durability be at least 2 standard deviations better than the DWPF environmental assessment glass (see below) as determined by the Product Consistency Test (ASTM- C 1285-94).

Acceptable leachate results are: B ≤ 16.7 mg/L, Li ≤ 9.57 mg/L, Na ≤ 13.3 mg/L

Requirement: The aluminum content shall be at least 3 wt% (dry solids basis).

Glass Insolubles

There are a number of species which have limited solubility in the glass. If any one of these exceeds the solubility limits, secondary glass phases may be formed in the melter thus adversely affecting melter operations and life. **Requirement:** The current glass solubility limits shall not be exceeded.

Element	Weight % (dry solids basis)
TiO_2 [121]	1.00
Cr_2O_3 [122]	0.30
PO_4 [123]	3.00
NaF [124]	1.00
NaCl [125]	1.00
Cu [126]	0.50

Other glass properties which must be controlled for melter operational concerns (productions rates, safety and melter lifetime) are liquidus and viscosity. **Requirement:** The viscosity shall be 20 to 100 poise. **Requirement:** The liquidus temperature (crystallization temperature) shall be at less than 1050 °C.

Iron and Aluminum in the Treated Sludge

The primary components affecting the liquidus and viscosity are iron, aluminum, alkali, and frit. The DWPF frit has been formulated based on projected compositions of treated sludge (aluminum-dissolved and washed).

Excessive amounts of iron and aluminum either would either lead to reduced waste loading in the glass (which reduces DWPF's capacity to process waste and may result in increased production of canisters) or may require reformulation of the frit.

Alkali in Salt and Sludge

Excessive alkali (Na and K) in the glass affect melt viscosity and glass product durability. The impact is similar to excessive Iron and Aluminum in that DWPF capacity to process waste would be reduced (possibly requiring production of extra canisters). The amounts of Na in the sludge (and precipitate) are controllable by washing in ESP (and ITP/LWF, respectively).

(NOTE: Frit reformulation for high incoming alkali is not a realistic possibility since the DWPF frit already has essentially all the alkali removed that can be and still have a processable frit.)

Corrosive Species[127]

Extensive corrosion evaluations have been performed on HLW Materials of construction. Mercury, sulfates, chloride, and fluoride have been evaluated at maximum anticipated levels. **Requirement:** The following concentrations shall not be exceeded in the SRAT product.

Element	Concentration
Hg	28,000 mg/L
Sulfate	0.0117 pounds / gallon

Miscellaneous

Other materials for which there are no current design bases/limits but which can affect DWPF operability and glass production are zeolite, silica, and carbon.

Canister Heat Generation

Radioactive decay of the radionuclides in the glass will result in heating of the glass, the canisters, and the storage facility. The primary concern is the GWSB design heat handling capacity and the potential

deleterious effects of heat on the concrete strength. The first GWSB has been designed to store 2000 canisters with an average heat generation rate of 460 watts/canister [28]. This limit includes contributions from both the sludge and salt feed streams. **Requirement:** The canister heat generation shall not exceed 460 watts/ canister.

Canister Requirements[14]

Requirements for the canister itself are controlled during canister fabrication and verified by inspections. The requirements specify materials of construction (austenitic stainless steel), labeling (number of labels, font type and size, required information, location, etc.), diameter, length, perpendicularity, and neck and flange concentricity. **Requirement:** The WAPS canister requirements must be met.

Canister Integrity/Cleanliness[14]

Several of the compliance strategies for the WAPS requirements deal with the integrity and cleanliness, both inside and out, of the canister. These requirements are Inner Canister Closure leak-tightness (to prevent water intrusion during canister decontamination), final plug weld parameters (force, current, and time to assure a leak-tight seal), exclusion of foreign materials (to prevent potentially incompatible materials from entering the canister), smearable beta/gamma (to prevent spread of contamination), and control of frit blasting parameters (to prevent breaching of the canister). **Requirement:** The WAPS canister requirements must be met.

DWPF Aqueous Recycle Streams

The aqueous recycle from the DWPF is normally comprised of condensates from the Chemical Process Cell (from the SMECT) and from the Melt Cell (from the OGCT). Occasionally, there will be neutralized acid from equipment decontamination and caustic/fiberglass solutions/slurries from dissolution of HEMEs and HEPAs.

There are small quantities of entrained sludge, soluble and sparingly soluble organics (including nitrated aromatics), HNO_3, NH_4NO_3, mercury compounds, and antifoam in the SMECT condensate. The OGCT condensate contains small amounts of glass particles, dissolved Cesium, nitric acid, and mercury compounds. In addition, DWPF analytical chemicals will be disposed of via the RCT and will, therefore, be present in small concentrations. **Requirement:** This stream must meet the limits specified above for receipt into the tank farm.

Recovered Organic

The vast majority of the TPB precipitate aromatic content is recovered in the SPC as organic waste, primarily benzene with numerous other organics including phenol, biphenyl, aniline, diphenylamine, and terphenyls. **Requirement:** The recovered organic must meet be less than 1000 d/m/ml for transfer to the Organic Waste Storage Tank (OWST) and the Consolidated Incinerator Facility. **Requirement:** The mercury concentration shall not exceed 260 mg/L. [29]

Recovered Mercury

The DWPF is the only purge point in the HLW system for mercury. Since mercury is not incorporated in to the borosilicate glass it must be reduced and steam stripped in the DWPF SRAT. **Requirement:** Mercury must be removed sufficient to met the corrosive species limits in the SRAT Product. After sufficient washing and decontamination, the recovered mercury is transferred as a Low-Level Mixed Waste to Solid Waste for interim storage until eventual disposal, which is to be determined.

5.2 Requirements for Utilizing Solid Waste Facilities

The Solid Waste Division provides for the storage and/or treatment of Sanitary Waste, Low Level radioactive Waste (LLW), Hazardous (non radioactive) Waste, Low Level Mixed Waste, and Transuranic waste (TRU).

5.2.1 Saltstone Facility

The Saltstone Facility is permitted by SCDHEC as a totally enclosed, wastewater treatment plant that converts low activity aqueous waste into a Saltstone grout that is not classified as hazardous waste. Aqueous waste treated by the Saltstone Facility is subject to the requirements of WAC 4.01. These are summarized below:

Requirement: Saltstone must be formulated to meet permit and long-term performance requirements. As noted in Section 10.3, a broad range of dry material compositions has been demonstrated to yield an acceptable Saltstone product. However, certain restrictions are imposed on the SPF process to assure Saltstone with the required properties is produced:

1. Sufficient dry material must be added to the aqueous waste during the production of Saltstone to assure that the presence of free liquids in a vault does not exceed 1 vol% of the total waste volume at the time of vault closure.

2. Hazardous waste, as defined by SCDHEC (and the EPA), cannot be placed in the SDF for disposal.

3. The temperature of the Saltstone during curing in the vault cannot exceed 90 degrees centigrade to assure long-term integrity of the Saltstone.

4. Radioactive contaminants in the waste must be "as low as reasonably achievable" (ALARA) and in no case should the concentration of individual radioactive contaminants exceed the limits specified by the Nuclear Regulatory Commission (NRC) for Class C LLW. WSRC has imposed a goal to assure that the overall average concentration of individual radioactive contaminants in the waste placed in the SDF shall not exceed the limits specified by the NRC for Class A waste.

Requirement: Only aqueous waste can be transferred to the Saltstone.

Requirement: Waste, which contains or generates toxic gas or fumes in quantities harmful to facility worker is prohibited:

Requirement: The pH of the waste shall be greater than 10

Requirement: The temperature of the solution be greater than 10 degrees C (to ensure salt solubility) and less than 40 degrees C (to ensure the maximum curing temperature of 90 degrees C is not exceeded)

Because of limited radiation shielding in the SPF, restrictions are imposed on generators to minimize the concentration of radioactive contaminants that emit high-energy gamma radiation. Requirement: The limits below shall be met.

Radioactive Contaminant	Limit (nCi/g)	Basis
H-3	1800	
C-14	800	NRC Class A
Ni-59	23,000	NRC Class A
Ni-63	3,700	NRC Class A
Co-60	6.8	Shielding
Se-79	12	Groundwater
Sr/Y-90	40	NRC Class A
Nb-94	20	NRC Class A
Tc-99	320	NRC Class A
Ru/Rh-106	128	Shielding
Sb-125	76	Shielding
Sn-126	14	Shielding
I-129	1	Groundwater
Cs-137	45	Shielding
Eu-154	16	Shielding
Np-237	0.03	Groundwater
Pu-241	200	Hazard Analysis
RCG (Note 1)	1	Shielding
Total Alpha (note 2)	20	NRC Class A
Total Beta/Gamma	7,500	AB Source Term

Note 1. Radionuclides that emit high energy gamma radiation must be monitored to ensure radition exposure does not exceed RC& O guidelines. Based on the current ITP process scheme this limit is determined as follows: RCG= 0.145x[Co-60] + 0.0078 x[Ru-106] + 0.013x [Sb 125] + 0.0705 x [Sn-126] + 0.022 x [Cs-137] + 0.061 x [Eu-154]

Note 2. This also protects the AB limit of 50 nCi/g Total Alpha

Requirement: The aqueous waste shall not contain or generate volatile materials at concentrations that can produce at equilibrium vapors in the flammable or explosive range. Component limits for the ITP processing scheme are provided below.

Salt solution sent to Z-Area can contain low levels of hazardous substances. However, concentrations of these contaminants must be sufficiently low to assure that non-hazardous Saltstone, as defined by regulatory agencies, can be produced. Requirement: The Chemical contaminant limits below shall be met

Chemical Contaminant	Acceptance Limit (mg/L)	Basis
Hazardous Metals		
As	230	JCO
Ba	1000	TCLP
Cd	110	JCO
Cr	1100	JCO
Pb	1000	JCO
Hg	250	LDR
Se	350	Groundwater
Ag	230	JCO
Organics (Note 2)		
Benzene (Note 1)	3	LFL
Butanol [sodium salt] + Isopropanol [sodium salt]	3000	LFL
Methanol	300	LFL
NaTPB	1000	LFL
Tributylphosphate	400	SCDHEC Permit
Phenol [sodium salt]	1000	SCDHEC Permit
EDTA [sodium salt]	500	SCDHEC Permit
Other volatiles	20	SCDHEC Permit

Note 1. The rate of benzene generation shall not exceed 0.02 mg/L-Hr at 40 degrees C
Note 2. The limits for LFL control can likely be adjusted. These limits are based on the ITP processing scheme.

5.2.3 Effluent Treatment Facility

The Effluent Treatment Facility (ETF) is permitted by SCDHEC as a totally enclosed, wastewater treatment plant that treats very low activity aqueous waste prior to discharge to the environment.

The ETF process has different removal efficiencies for each contaminant species and the operation of some steps can be impaired by various species. This results in several methodologies that can determine the maximum influent concentration of each species:

- The maximum influent composition may be set by the discharge limitations (e.g., the NPDES permit, or DOE orders) in conjunction with the overall removal efficiencies. For many species, the overall process efficiency (typically >95%) determines the ETF influent limit. The notable exception is tritium, which is not removed at all (discounting the small fraction that goes to Saltstone).

- The allowable influent composition may be limited by the Z-area waste acceptance criteria, e.g., for chromium and gross beta/gamma. Most contaminants that are removed from the ETF influent are concentrated into the evaporator bottoms stream and go to Saltstone after temporary storage in Tank 50H. Thus, ETF's volume reduction factor (typically 50:1-100:1) limits the ETF influent to 1-2% of the Saltstone criteria.

- The limiting characteristic of some species is their impact on process operability, e.g. bacteria/algae fouling of the sub-micron filters, or NaNO3 overloading the reverse osmosis units. For other species, the impact could be adsorbing enough contaminant that the secondary waste becomes a RCRA hazardous waste.

Requirement: Only aqueous waste can be transferred to the ETF.

Requirement: Aqueous Waste shall not contain of generate volatile organic materials at concentrations that can produce at equilibrium, vapors in the flammable or explosive range.

Requirement: Waste, which contains or generates toxic gas or fumes in quantities harmful to facility worker is prohibited.

Waste is normally received to either the Waste Water Collection Tanks or the Evaporator Feed Tanks. Waste Acceptance Criteria have been developed which are based on the requirements of the SCDHEC operating permit and C-2 application, Saltstone acceptance requirements, DOE order 5400.5, the south Carolina water Quality Criteria, the Bio documents, and the requirements for preventing the generation of solid mixed waste. These criteria can be found in reference 30, Waste Acceptance Criteria for the F/H Effluent Treatment Facility, X-SD-G-00003 Rev. 0, March, 1997.

5.2.3 Secondary Waste

The operation of any facility will produce secondary waste. These may be the nature of process waste (e.g. spent resins) or job waste. Each of the primary waste types is summarized below. The management of these wastes are described in WSRC Manual 1S "Savannah River Site Waste Acceptance Criteria Manual". Requirement: all criteria set forth in Manual 1S shall be met.

Sanitary Waste is defined as waste such as garbage, that is generated by normal housekeeping activities and are not hazardous or radioactive. Currently, all SRS sanitary waste is sent off site for disposal. Requirement: The sanitary waste WAC is defined in Manual 1S WAC 3.09.

Low Level Waste (LLW) is defined as waste that contains radioactive material and is not classified as high-level waste, transuranic (TRU) waste, spent nuclear fuel, or Atomic Energy Act (AEA)11e(2) byproduct material, as defined in DOE Order 5820.2A but containing less than 10nCi per gram transuranics. LLW at SRS is segregated into a higher activity fraction (intermediate activity waste) and a lower activity fraction (low-activity waste). Intermediate-activity waste is low-level waste that produces a radiation dose rate equal to or greater than 300 mR/hr at 5 cm from an unshielded container. Requirement: Generation of LLW is subject to the program requirements contained in Manual 1S WAC 1.02, the characterization requirements in WAC 2.02 and waste acceptance criteria contained in WAC 3.17.

Hazardous Waste is waste that is designated hazardous by South Carolina Hazardous Waste Management Regulations. NOTE: The statutory definition found in section 1004(5) of the Resource Conservation and Recovery Act (42 USCA 6903) is a solid waste, or combination of wastes, that because of its quantity, concentration, or physical, chemical, or infectious characteristics may (a) cause or significantly contribute to an increase in mortality or in serious irreversible, or incapacitating reversible illness or (b) pose a substantial present or potential hazard to human health or the environment when improperly treated, stored, transported, or disposed of, or otherwise managed. Criteria for identification and listing of hazardous waste are found in Title 40 of the Code of Federal Regulations (CFR), Part 261.3. Requirement: The Hazardous Waste acceptance criteria is defined in WAC 3.08.

Mixed Waste (MW) is waste containing both radioactive and hazardous components as defined by the Atomic Energy Act and the Resource Conservation and Recovery Act, respectively. Requirement: Mixed waste are subject to the program requirements contained in WAC 1.02 and the waste acceptance criteria contained in WAC 3.07.

Transuranic (TRU) waste is waste that is contaminated with alpha-emitting transuranic radionuclides with half-lives greater than 20 years, and at concentrations greater than 100nCi/gram of the waste matrix at the time of assay. The mass of the waste container and shielding shall not be used in determining the TRU

concentration. (Note: SRS currently uses 10nCi/gram as a minimum value for packaging waste to meet TRU waste criteria). **Requirement:** TRU waste is subject to the requirements contained in WAC 3.06.

Consolidated Incineration Facility

The Consolidated Incineration Facility (CIF) is utilized to volume reduce some combustible LLW, combustible Hazardous Waste, and combustible Mixed Waste. **Requirement:** Waste processed by the CIF are subject to the requirements of Manual 1S WAC 3.13.

6.0 References

1. W. L. Poe, "Leakage from Waste Tank 16; Amount, Fate, and Impact," DP-1358, November 1974

2. Code of Federal Regulations, Title 40, Part 264, "TSD Facility Standards," Subpart J, "Tank Systems," 264.193, "Containment and detection of releases"

3. EPA, SCDHEC, and DOE, "Federal Facility Agreement under section 120 of CERCLA and 3008(h) and 6001 of RCRA," EPA Administrative Docket Number 89-05-FF, Effective August 16, 1993

4. FFA Schedule Acceptance Letter

5. EPA and DOE, "Federal Facility Compliance Agreement," EPA Administrative Docket Number 91-01-FFR, EPA ID Number SC1 890 008 989, Effective 3/13/91

6. P. D. d'Entremont, et. al. "High Level Waste Sytem Process Interface Description" WSRC-TR-94-0442, Rev. 0 September, 1994.

7. "SRS-Mixed Waste- Proposed Site Treatment Plan", WSRC-TR-94-0608, March 1995.

8. Accelerated Clean-up Plan

9. N. R. Davis, et. al. "High Level Waste System Plan Revision 8", HLW-OVP-97-0068, September 1997.

10. J. R. Fowler, "Chemical Composition of F Area Soluble High Level Waste", DPST-82-390, March 22,1982.

11. J. F. Fowler, "Composition of H-Area & SRP Soluble High Level Waste" DPST-82-502, April 28,1982

12. M. E. Jamison, "Waste Acceptance Criteria for High Level Liquid Transfers to the 241-F/H Tank Farms", X-SD-G-0001 Rev. 2, February 1998.

13. SAR Tank Farms (Latest)

14. "Waste Acceptance Product Specifications for Vitrified High-Level Waste Forms", DOE/EM - 0053, Rev. 2. December 1996.

15. "Waste Form Qualification Report," *WSRC-IM-91-116-X (X = volume number)*

16. Waste Acceptance Reference Manual, WSRC-IM-93-45

17 DWPF Air Emission Permit, 0080-0066-CA, South Carolina Department of Health and Environmental Control

18 M. C. Chandler, "DWPF Sludge Feed Gamma and Neutron Source Strength (U), HLW-HLE-95-0277, April 3, 1995.

19 "Final Safety Analysis Report, Defense Waste Processing Facility," WSRC-SA-6, Rev. 16, March 1997.

20 B. C. Ha, "Nuclear Criticality Safety Analysis Summary Report: The S-Area Defense Waste Processing Facility (U)," WSRC-Rp-94-396, Rev. 0, October 1994.

21 Ti Limit

22 Cr Limit

23 P Limit

24 F Limit

25 Cl Limit

26 Cu Limit

27 R. A. Corbett, W. S. Morrison and D. F. Bickford, "Corrosion evaluation of Alloys for Nuclear Waste Processing, Material Performance", National Association of Corrosion Engineers, February 1987

28 "Basic Data Report - DWPF Sludge Plant - SRS 200-S Area", WSRC-RP-92-1186

29 OWST SCDHEC permit

30. "Waste Acceptance Criteria for the F/H Effluent Treatment Facility", X-SD-G-00003 Rev. 0, March 1997.

References for new missions

1. National Academy of Sciences, Committee on International Security and Arms Control, "Management and Disposition of Excess Weapons Plutonium," National Academy Press, Washington, DC, 1994.
2. Lawrence Livermore National Laboratory, "Alternative Technical Summary Report: Ceramic Can-In-Canister Variant", UCRL-ID-122661, L-20219-1, August, 1996.
3. Lawrence Livermore National Laboratory, "Technical Evaluation Panel Summary Report: Ceramic and Glass Immobilization Options, UCRL-ID-129315, January, 1998.

Appendix A
Process Description

1.0 High Level Waste System Functions and Existing Configuration
2.0 High Level Waste Storage and Evaporation
2.1 High Level Waste Storage and Evaporation Process Description
2.2 High Level Waste Storage and Evaporation Equipment Description
2.3 Waste Removal
3.0 Salt Pretreatment
3.1 ITP Description
3.2 ITP Equipment Description
3..3 Latewash
4.0 Extended Sludge Processing
4.1 ESP Process Description
4.2 ESP Equipment Description
5.0 Defense Waste Processing Facility
5.1 Salt Processing Cell
5.2 Chemical Processing Cell
5.3 Melt Cell
5.4 Canister Handling
6.0 Effluent Treatment Facility
6.1 ETF Description
7.0 Saltstone
7.1 Saltstone Description
8.0 References

1.0 High Level Waste System Functions and Existing Configuration

The following section describe the functions and the current equipment configuration of the HLW system.[A-1]

2.0 High Level Waste Storage and Evaporation

The HLW Storage and Evaporation Process function is storage of high-level waste in a safe and environmentally sound manner until downstream processes are available to process the waste into forms suitable for final disposal.

Once downstream processes are available to process a tank of waste, the waste is removed from the tanks and sent for further processing.

A diagram of the Storage and Evaporation Processes is shown in Figure A-1.

2.1 Process Description

Receipt, Storage, and Aging of Waste

The Tank Farms receive waste from a number of sources, primarily in F and H areas. The wastes are produced as the result of the separation of useful products from spent aluminum-clad nuclear fuel and targets. In the Separations processes, the waste is dissolved in nitric acid. To prevent corrosion of the carbon steel waste tanks, the waste is then made basic with sodium hydroxide in the Separations process before it is sent to HLW Storage and Evaporation.

Caustic addition to the waste produces a dark brown mixture of insoluble sludges suspended in a salt solution. The primary insoluble species are Iron, Manganese, Aluminum, and Uranium hydroxides. The primary salt constituents are the sodium salts of NO_3^-, NO_2^- and OH^-.

Incoming Wastes entering the Tank Farm (Stream 1) are received into a receipt tank. Any insoluble sludges in the waste settle to the bottom of the tank, forming a layer of sludge at the bottom, with a clear layer of supernate (salt solution) above it. The tanks are designed to safely store this waste, incorporating a number of features to prevent migration of the waste and to prevent process accidents.

During storage, the waste also ages, allowing radionuclides to decay. For some radionuclides (for example, Ru-106) radioactive aging is the process planned for removing these nuclides from high-level waste.

Evaporation

Once the sludge in the waste has settled to the bottom of the tank, a region of clear supernate remains above the sludge. To reduce the cost of storage and improve the safety of storage, the supernate is evaporated to reduce its volume and mobility. Much of the supernate is reduced to solid saltcake (with some interstitial liquid). Converting the waste into saltcake considerably reduces the number of tanks needed for storage and reduces the mobility of the waste, which enhances safety for two reasons: 1) the waste is less likely to leak, and 2) having the waste in solid form reduces the probability and/or consequences of many accidents analyzed in the Safety Analysis Report.

To accomplish evaporation, the supernate in a waste receipt tank is decanted (some sludge is entrained) and sent to an evaporator. The supernate may be sent directly from the waste receipt tank to an evaporator (i.e., the waste receipt tank doubles as an evaporator feed tank) or may be sent to a designated evaporator feed tank.

The overheads from the evaporator are condensed, creating a mildly contaminated wastewater stream. After condensation, the overheads are sent to a mercury collection tank. Overheads from HLW with high mercury concentrations are supersaturated in mercury (because mercury is volatile), so small quantities (liters per week or less) of mercury collect in the bottom of the tank.

After passing through the mercury collection tank, the overheads may be treated by passing them through a cesium removal column (an ion exchange column) to remove residual Cs-137. This treatment step is omitted for overheads that have been sufficiently decontaminated by the evaporator.

Once all treatment steps in the evaporator system are completed, the overheads are sent to ETF (Stream 13) for further decontamination and eventual release to the environment.

The concentrated evaporator bottoms are sent to an evaporator receipt tank. In the receipt tank, the concentrated waste cools, and solid salt crystallizes and deposits on the floor, cooling coils, and wall of the receipt tank. The concentrated salt solution left in the receipt tank is then transferred back to the evaporator feed tank for further evaporation.

The goal of this process is to concentrate most of the salt solution into solid saltcake, which minimizes the volume and enhances the safety of storing the salt waste by reducing the mobility of the waste.

2.2 High Level Waste Storage and Evaporation Equipment Description

Distributed between F and H areas are 51 tanks designed to store high-level waste. These tanks and associated equipment are known as the F and H-area Tank Farms. A diagram of the Storage and Evaporation Processes is shown in Figure A-1.

The 51 high-level waste tanks at SRS are of four types, as follows:[A-2]

Type I Tanks These are tanks 1-12, the original twelve tanks built at SRS. The primary tanks are constructed of carbon steel with a design capacity of 750,000 gallons. Each tank has a carbon steel annulus pan, five feet in height, which is underneath the primary tank to catch leaked waste (sometimes referred to as cup-and-saucer construction). The primary tank and annulus pan are enclosed in a concrete vault. Five of these tanks (Tanks 1,9,10,11, and 12) have leaked observable quantities of waste from primary containment into the annulus pans. Also, none of the tanks meet current DOE or regulatory criteria for secondary containment. Thus, emptying and retiring these tanks is a high priority in the HLW System.

Type II Tanks These are tanks 13-16. The primary tanks are constructed of carbon steel with a design capacity of 1,030,000 gallons. Similar to the type I tanks, each tank has a five-foot annulus pan and a concrete vault. All four of these tanks have leaked waste from the primary into the annulus pan. In 1960, one tank, Tank 16H, overflowed its annulus pan and leaked some tens of gallons of waste into the soil. None of the tanks meet current DOE or regulatory criteria for secondary containment. Emptying and retiring these tanks is also a high priority in the HLW System.

Type III (and IIIA) Tanks These are tanks 25-51. The type III and IIIA tanks are the latest design of tank at SRS, and are the only tanks planned for continued service. The primary tanks are carbon steel with a design capacity of 1,300,000 gallons. The primary tank is surrounded by a full-height secondary tank of carbon steel, which is surrounded by a concrete vault. These tanks meet all DOE and regulatory criteria. The major differences between the two tanks are 1) the type IIIA tanks have distributed cooling coils, whereas the type III tanks have no cooling coils as constructed (Coils were inserted into these tanks through the risers after construction), 2) the type IIIA tanks have an improved pattern of cooling slots between the

bottoms of the primary and secondary tanks, and 3) the type IIIA tanks have the ability to detect leakage from the secondary tank. As previously noted, six of the type IIIA tanks are dedicated to In-Tank Precipitation and Extended Sludge Processing and are not part of the Storage and Evaporation process.

Type IV Tanks These are tanks 17-24. These tanks were built before the type III and IIIA tanks. The primary tank is carbon steel, and is surrounded by a concrete enclosure that impinges on the steel with no annular space. There is a series of drainage slots in the concrete underneath the tank that leads to a leak detection sump, but there is no secondary containment. None of these tanks have cooling coils. None of the type IV tanks meet current DOE or regulatory criteria for secondary containment. Two of the tanks, tanks 19 and 20, have known penetrations through the primary steel liner, although no waste has been observed to leak through these penetrations. Emptying and retiring these tanks is a high priority in the HLW System.

Tanks 17 and 20 were closed in 1997 in accordance with regulatory guidelines.

Evaporators

There are five evaporators: 242-F, 242-16F, 242-H, 242-16H, and 242-25H. The 242-F evaporator is in cold standby, and there are currently no plans to operate this evaporator again. The 242-25H evaporator is under construction (Replacement High-Level Waste Evaporator). The evaporators are all of bent-tube design, with a pot in which the waste is heated by a bent-tube bundle of steam coils. The pots are housed in concrete vaults for shielding and contamination control.

Maintenance Facility (299-H)

This is a facility for repairing failed equipment from the tank farm. Equipment entering the facility can be decontaminated by various means, including soaking in decontamination solutions. Because of its extensive decontamination capabilities, the facility allows decontamination of equipment to lower levels than is possible in the field. After decontamination the equipment can be repaired by personnel in protective clothing (i.e. contact maintenance rather than the remote maintenance that is normally required for HLW contaminated items). This facility is usually considered part of the Tank Farm, and the spent decontamination solutions from the facility are sent to the Tank Farms.

2.3 Waste Removal

Once the downstream processes are ready to receive waste from a particular tank, the waste is removed from the tank using hydraulic slurrying techniques. Waste is removed (sludge or salt) using long-shafted slurry pumps to agitate the liquid contents of the tank and suspend the sludge or dissolve the salt. Waste is pumped out of the tank using a pump or jet.

Prior to removing sludge wastes some of the soluble salts in the waste's supernate may be removed by adding water to the tank and suspending the sludge using slurry pumps, then allowing the sludge to settle and decanting the supernate. By reducing the soluble salts prior to waste removal, the amount of washing required during the ESP process is reduced.

Figure A-1

HLW Storage and Evaporation

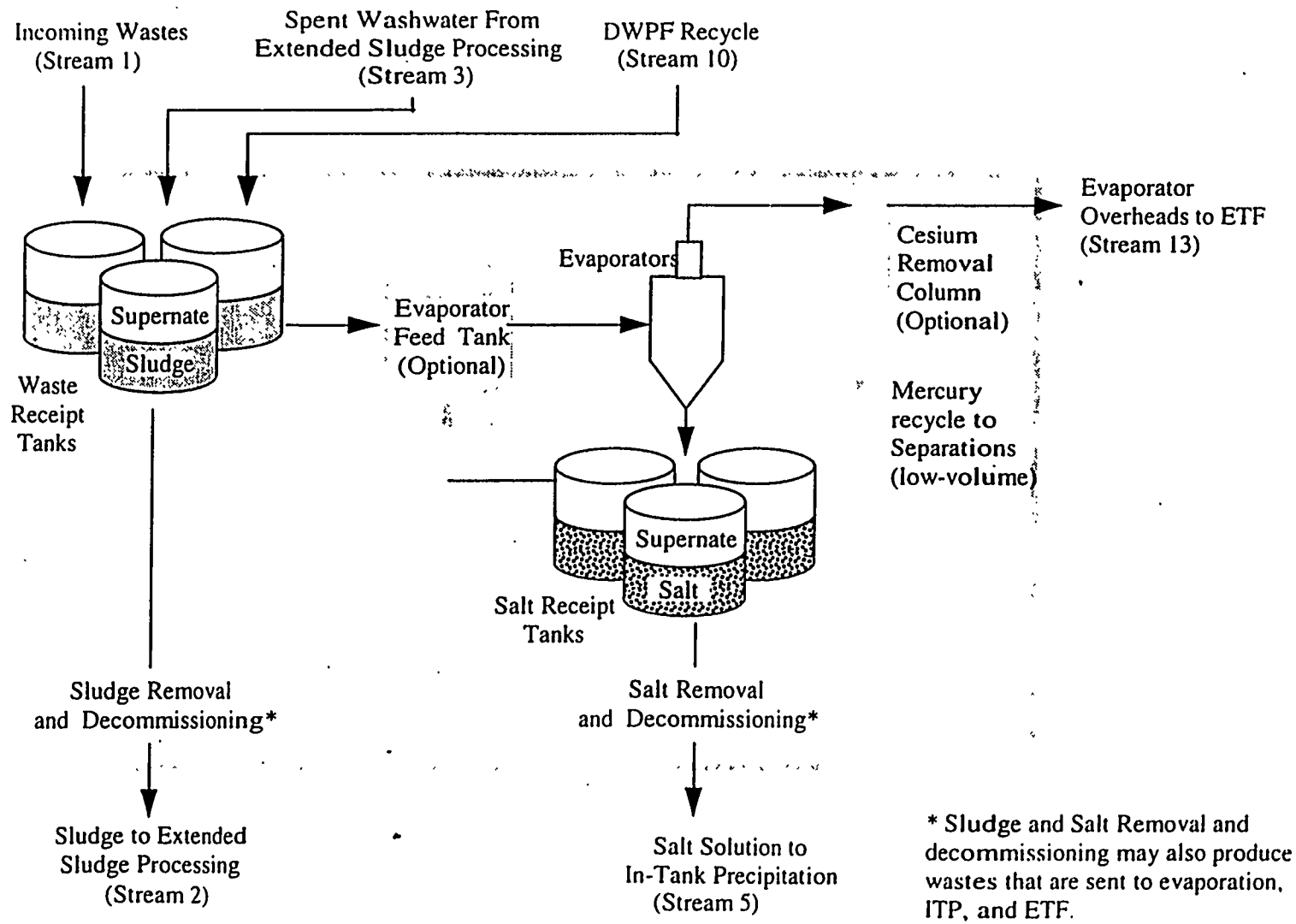

* Sludge and Salt Removal and decommissioning may also produce wastes that are sent to evaporation, ITP, and ETF.

3.0 Salt Pretreatment

The function of the salt pre-treatment facility is to reduce the volume of the high level waste fraction which must be vitrified. The bulk of the waste containing non-radioactive soluble salts and low levels of radioactive materials can then be disposed of by immobilizing them in saltstone.

Volume reduction is not required to incorporate the salt waste into borosilicate glass. However volume reduction is highly desirable from a life cycle cost perspective.

The following sections describe the ITP process and equipment. *Alternate salt disposition process proposals may elect to use all, apart or none of this equipment.* The section is provided for completeness of the current configuration description.

3.1 ITP Process Description

In the ITP process, soluble radioactive metal ions--cesium, strontium, uranium, and plutonium--are precipitated with sodium tetraphenylborate or adsorbed on Monosodium titanate to form insoluble solids. The resulting precipitate, which contains most of the radionuclides, is filtered to concentrate the solids. The precipitate is sent to the DWPF for vitrification in glass. The decontaminated salt solution, or filtrate, containing primarily sodium salts of hydroxide, nitrate, and nitrite, is transferred to Saltstone for disposal.

Precipitation and Concentration

Salt solution is pumped into Tank 48H from Storage and Evaporation. The salt solution is decontaminated in a batch process where it is mixed with inhibited water or recycled wash water from Tank 50H, sodium tetraphenylborate (NaTPB), $NaB(C_6H_5)_4$, and mono-sodium titanate (MST), $NaTi_2O_5H$. The purpose of the inhibited water or recycled wash water is to reduce the total sodium content to within the range necessary to optimize the precipitation reaction. The most abundant radionuclide present in salt solution is Cs-137. Sodium tetraphenylborate is added to precipitate the cesium as a tetraphenylborate salt. The non-radioactive potassium, cesium, and ammonium ions are also precipitated in this process. The potassium ion concentration is nominally 100 times that of the total cesium concentration, although this ratio can vary widely.

$$M^+ + B(C_6H_5)_4^- \Rightarrow MB(C_6H_5)_4 \qquad (M = Cs, K, \text{ or } NH_4)$$

Mercury also reacts with tetraphenylborate to form insoluble diphenylmercury, which is retained in the precipitate during filtration. An excess of NaTPB is added to suppress the solubility of cesium. Monosodium titanate is added to adsorb the soluble strontium, plutonium, and uranium ions if these radionuclides are present in quantities exceeding the limit in Saltstone.

The concentration of the slurry, containing the MST and precipitated tetraphenylborate solids, is a nominal 1 wt % insoluble solids after precipitation. The slurry is concentrated by crossflow filtration to a nominal 10 wt % and is returned to Tank 48H. This series of steps (waste transfer, inhibited water and chemical addition, and filtration) is repeated as necessary to obtain an acceptable amount of concentrated slurry for the washing stage.

Precipitate Washing

The combined slurry from one or more batches is then washed to remove soluble sodium salts by adding inhibited water to Tank 48H and removing spent wash water by filtration. The spent wash water is transferred to Tank 50H for recycling in subsequent batches as dilution water. Excess sodium tetraphenylborate is also removed in this procedure, and is similarly recycled in subsequent batches. The

high-activity washed precipitate is transferred to an interim storage tank, Tank 49H, prior to transfer to Late Wash . See Figure A-2 below.

When necessary, the filters are chemically cleaned to remove foulants from the surface during either the washing or concentration processes. The cleaning chemicals are oxalic acid solution and sodium hydroxide solution. The waste solutions generated by this cleaning are sent to Tank 48H.

Benzene Generation

After precipitatation, NaTPB, KTPB and CsTPB undergo radiolytic and under certain conditions catalytic degradation. MTPB decomposes to aromatic organics (benzene, biphenyls, and triphenyls) and salts of sodium and boron. The exact mechanism for the catalytic degradation is not completely understood. The catalytic decomposition of TPB results in the formation of triphenylborane, diphenylborinic acid, phenylboric acid, and benzene. The degradation intermediates also decompose catalytically to form benzene. Testing has demonstrated that catalysis with copper ions and sludge solids (Pd has been identified as a primary catalyst in the sludge solids) can significantly increase the rate of decomposition of tetraphenylborate slurries.

Benzene Removal Process

Benzene removal from salt solution is required because of flammability concerns in Tank 50H and leachability of benzene from the Saltstone. The filtrate solutions are processed through the benzene stripping columns located in the ITP Filter/Stripper building. The two columns are designed for different flow rates with the larger column for the decontaminated salt solution and the smaller column for spent wash water. Using separate columns for the processes improves contamination control by segregating the higher activity spent wash water from decontaminated salt solution. Benzene is present in the sodium tetraphenylborate and is also produced from radiolysis of the precipitate in the tank. The counter-current nitrogen gas phase in both columns passes through a High Efficiency Particulate Air (HEPA) filter system prior to venting to the atmosphere. The liquid exiting the columns is collected in filtrate hold tanks, sampled, and analyzed prior to release to Saltstone (decontaminated salt solution) or Tank 50H (spent wash water).

3.2 In-Tank Precipitation Equipment

In-Tank Precipitation (Figure A-2) includes and interfaces with the following equipment:

Tank 48H - This Type IIIA tank is the location of the precipitation and absorption reactions. This nitrogen-inerted tank is equipped with filter feed pumps and slurry pumps for agitation.

Tank 49H - This Type IIIA tank is inerted with nitrogen and stores washed precipitate and serves as the feed tank for the Late Wash.

Tank 50H - This air ventilated Type IIIA tank stores spent wash water from both ITP and Late Wash. ETF Concentrate is normally transferred direct to Saltstone. A transfer route does exist from ETF to Tank 50H and the Tank Farm via HDB-8.

Filter/Stripper Building - This facility houses the two crossflow filters used for concentration of the precipitate, as well as the two stripping columns used to remove benzene. The filters are sintered stainless-steel tube bundles with a submicron pore size. The strippers are packed columns in which nitrogen is used to strip benzene from the filtrate. The Filter/Stripper Building also contains tanks, piping, valves, and instrumentation to support the process, as well as a process control laboratory.

ITP Control Building - This building houses the Instrument Control Room and the Electrical Control Room.

Cold Feeds Area - This area contains tanks, pumps, piping, and instrumentation necessary to receive, store, and add nonradioactive reagents to the process.

3.3 Latewash

In ITP, the precipitate is washed to reduce levels of soluble species (preventing excessive glass production) and is inhibited with $NaNO_2$ to prevent corrosion. However, the concentration of $NaNO_2$ required to inhibit corrosion is too high for the precipitate hydrolysis process. Also, while the precipitate is stored in Tank 49H, water soluble organic species are produced by radiolysis of the TPB. These organic species also impact precipitate hydrolysis operability by reducing the copper catalyst activity.

To avoid problems in precipitate hydrolysis, the LWF washes the precipitate to reduce the concentration of $NaNO_2$ and water soluble organic radiolysis products.

The precipitate slurry (Stream 7) is pumped into the Late Wash Precipitate Tank (LWPT) where soluble Cs and K (from radiolysis of Cs,KTPB) are reprecipitated with NaTPB. The slurry is then concentrated to the desired percent solids using a sintered metal crossflow filter. It is then washed with a dilute NaTPB solution (to prevent dissolution of CsTPB) until the nitrite and soluble organics concentrations are reduced to levels compatible with precipitate hydrolysis.[A-3]

Filtrate from the washing and concentration steps flows to the Late Wash Holdup Tank from which it will be transferred to Tank 50H (Stream 8). To meet ITP requirements for benzene, pH and inhibitors, the filtrate is sparged with N_2 to remove the dissolved benzene and NaOH is added. LWF vessels containing benzene and hydrogen due to radiolysis, are purged with nitrogen to maintain them below the minimum oxygen for combustion (MOC).

The filter will require periodic cleaning with oxalic acid and caustic. Foaming in the Late Wash Precipitate and the Late Wash Hold Tanks will be controlled by the addition of an antifoam, Surfynol® 420.

Figure A-2: In-Tank Precipitation

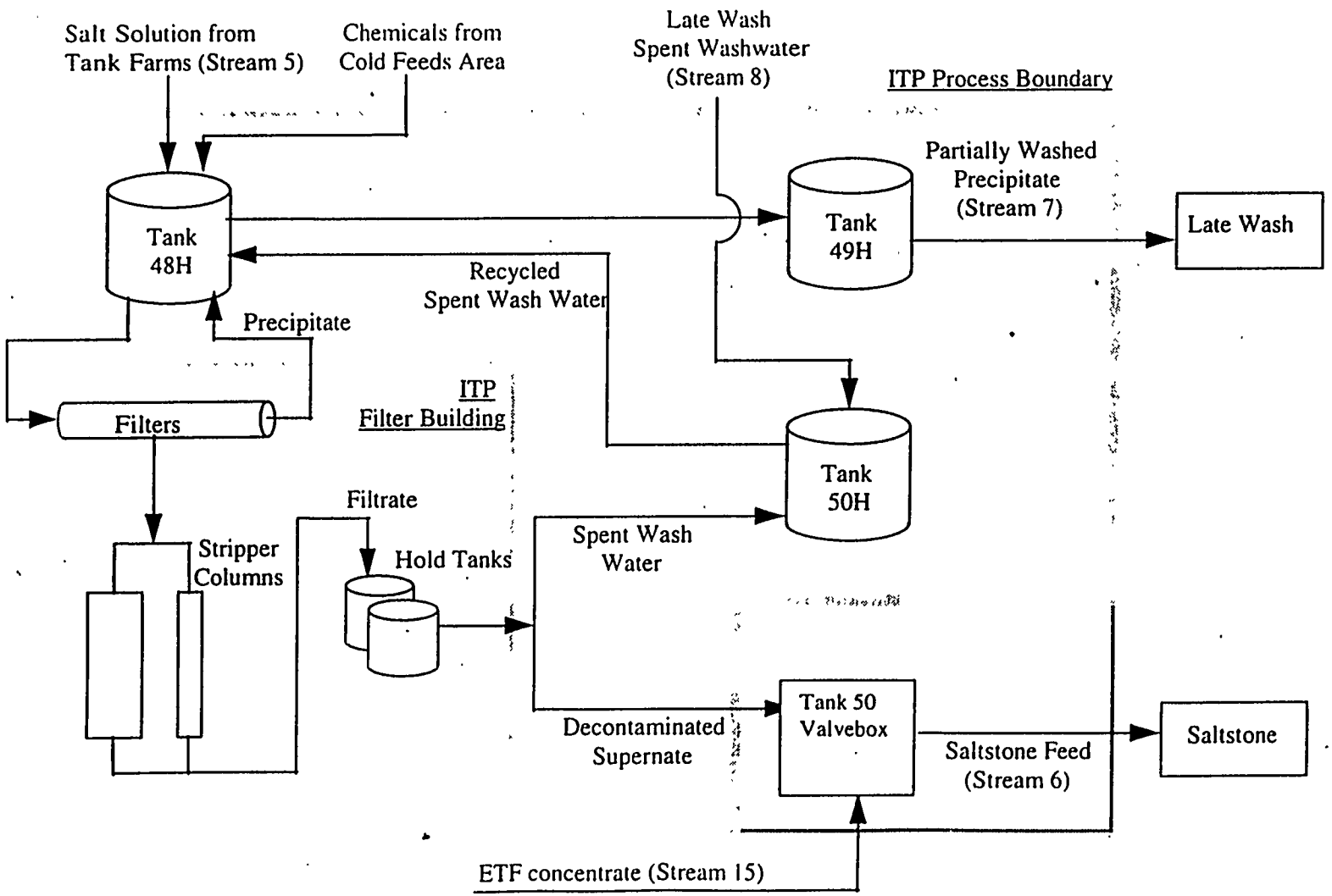

4.0 Extended Sludge Processing

Extended Sludge Processing modifies the sludge composition to prepare the sludge for feed to DWPF Vitrification. The purpose of processing is to reduce the volume of glass that is produced (i.e. allows much higher waste loading of sludge in glass). ESP modifies the sludge composition in two ways: 1) insoluble aluminum compounds are removed from those sludges that contain high concentrations of insoluble aluminum, and 2) all sludge is washed to remove soluble salts.

4.1 ESP Process Description

An insoluble sludge is formed when Separations adds sodium hydroxide to the fresh waste being sent to the Tank Farms. Extended Sludge Processing (ESP) converts insoluble aluminum compounds into soluble compounds by contacting the sludge with high concentrations of sodium hydroxide at near-boiling temperatures. After the aluminum has been solubilized, ESP washes the soluble salts (e.g., sodium nitrate) from this sludge by washing it with water. Both of these operations reduce the quantity of glass produced when the sludge is vitrified into waste glass.

ESP operates on large batches of sludge, so the entire current Storage and Evaporation inventory will be treated in about 10 batches. Each batch will be analyzed and then will supply DWPF for a 2-6 year period. This time period may be altered by the achievable operating attainments, or it may be limited by the waste removal schedule (i.e., when the next batch of sludge will be available). While ESP processes a batch of sludge (in Tank 42H, and either Tank 51H or 40H), the previous batch will be fed to DWPF from the other tank (i.e., either 40H or 51H).

Aluminum Dissolution

Part of the sludge inventory contains large amounts of aluminum, which can be partially removed (dissolved) by heating the sludge in a high caustic concentration. If the aluminum were not removed, then DWPF would have to increase the ratio of frit-to-waste (to control the viscosity and liquidus of the molten glass), increasing the number of glass canisters produced.

Aluminum dissolution is done in Tank 42 by adding caustic (NaOH) to the sludge, to achieve a certain hydroxide-to-Aluminum ratio and a certain excess hydroxide concentration. The sludge solids are suspended by using slurry pumps for agitation, and the temperature is increased by injecting steam through sparging downcomers. Maintaining this condition for several days converts the $Al_2O_3 \cdot (3)H_2O$ (gibbsite) to a soluble form (e.g., $Al(OH)_3$, or AlO_2^-). After the sludge solids are allowed to settle, the supernate containing dissolved Aluminum is then decanted from the tank.

One concern with the process is that uranium becomes more soluble under the high hydroxide conditions that exist during Aluminum Dissolution. Therefore, fissile isotopes of uranium (mainly U-235) dissolved during Aluminum Dissolution could potentially cause a criticality when the decanted supernate is evaporated and subsequently redissolved. Criticality is not a concern during Aluminum Dissolution or during evaporation of the decanted supernate because the uranium will remain distributed throughout the salt. However, when the saltcake is redissolved, some uranium may remain insoluble, and there is the potential that this uranium would concentrate at the bottom of the tank and form a critical mass. Studies are currently underway to determine if this mechanism is credible and if any controls are needed to prevent criticality.[A-4]

Soluble Salt Washing

Although the sludge has settled and compacted in the various waste tanks for 5 to 30 years, that settled volume still contains a large fraction of liquid. This interstitial supernate contains a large amount of dissolved salt (present as NaOH, $NaNO_3$, $NaNO_2$, $NaAlO_2$, Na_2CO_3, Na_2SO_4, etc). If this salt were not removed, then DWPF would have to increase the ratio of frit-to-waste (to control the rheology of the molten glass). This would greatly increase the number of glass canisters produced. Other reasons for removing the soluble salts include reducing DWPF's atmospheric NO_x emissions, and to meet requirements for glass insolubles and corrosive species.

The soluble salts are removed from the interstitial supernate by repeated dilution. First, washwater (with a low salt content) is added to the tank and the sludge solids are suspended using slurry pumps for agitation. Then the sludge solids are allowed to settle and the diluted supernate is decanted from the tank. This cycle is repeated until the salt content of the interstitial supernate is sufficiently low. To control nitrate induced corrosion, inhibitor salts (i.e., NaOH and $NaNO_2$) must be added along with the washwater. The makeup washwater may be fresh water or it can be some other waste solution with a sufficiently low salt content.

4.2 Extended Sludge Processing Equipment

Extended Sludge Processing (Figure A-3) includes and interfaces with the following equipment:

Tank 42H - This Type IIIA tank is used for the aluminum dissolution reaction and for sludge washing. This tank is equipped with steam spargers for heating and slurry pumps for agitation.

Tanks 40H and 51H- Each of these Type IIIA tanks is used for sludge washing and for feeding washed sludge to the DWPF.

ITP Control Building - This building houses the Instrument Control Room and the Electrical Control Room for the ESP equipment (in addition to performing the same functions for ITP.

ITP Cold Feeds Area - This area contains tanks, pumps, piping, and instrumentation necessary to receive, store, and add nonradioactive reagents to the ESP process (in addition to performing the same functions for ITP.

Figure A-3 Extended Sludge Processing

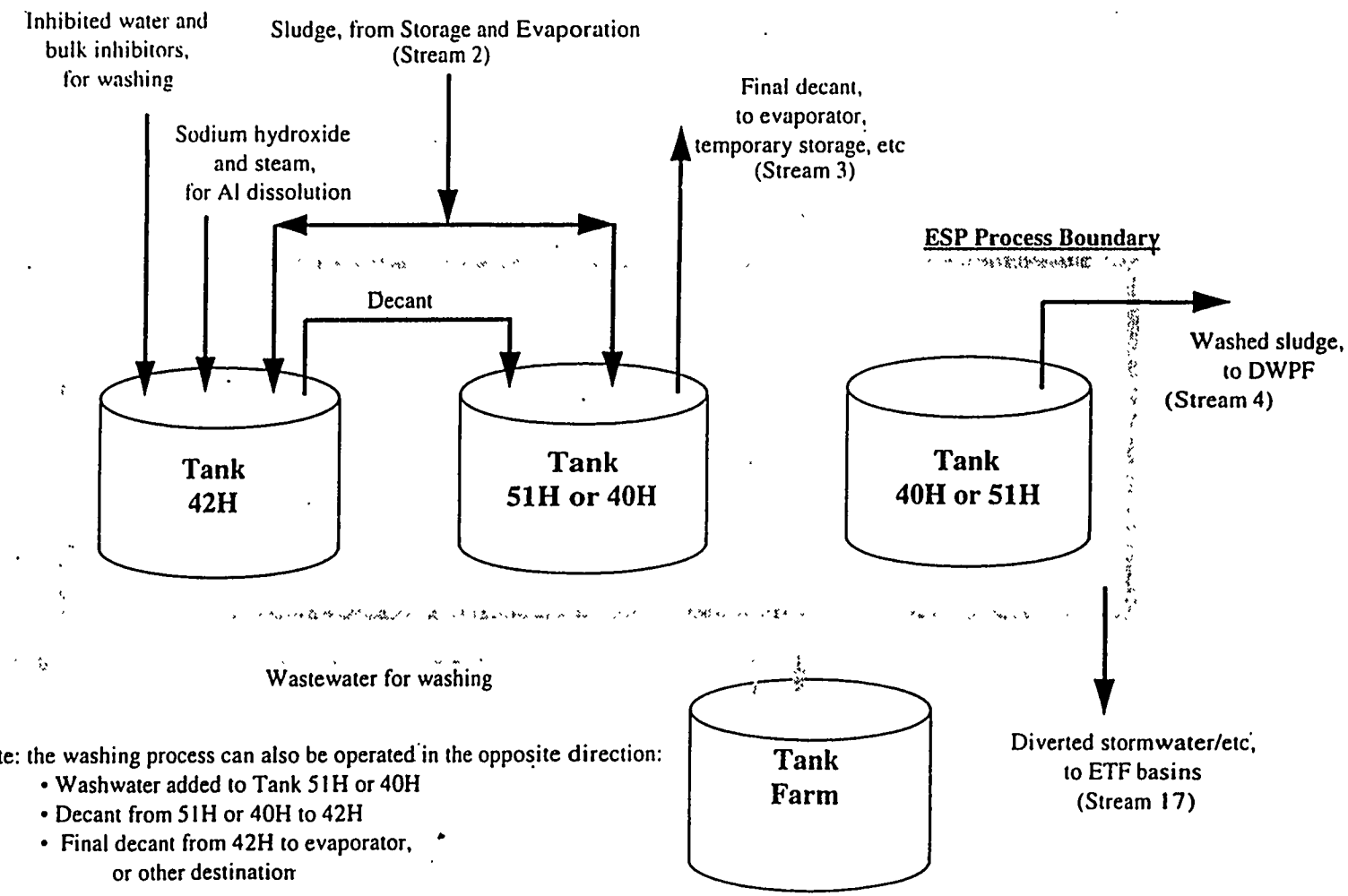

Note: the washing process can also be operated in the opposite direction:
- Washwater added to Tank 51H or 40H
- Decant from 51H or 40H to 42H
- Final decant from 42H to evaporator, or other destination

5.0 Defense Waste Processing Facility (DWPF)

The function of the DWPF is to process both the washed precipitate and sludge to produce a stable waste form, borosilicate glass by "vitrification". This glass is poured into canisters so that if can be shipped to a Federal Repository for final disposition.

The DWPF will also produce recycle streams which meet the Storage and Evaporation's acceptance criteria, and produce an organic waste stream which meets the acceptance requirements of the Consolidated Incinerator Facility (CIF).

For the purposes of this document, the DWPF process can be divided into four functional areas (see Figure A-4):

1. Salt Process Cell (SPC), which hydrolyzes the TPB precipitate slurry; Similar to the ITP process description this section is provided for completeness of the current configuration description. Alternate salt processes may elect to use all, apart, or none of the current SPC equipment.

2. Chemical Process Cell, which prepares melter feed by chemically treating the washed sludge and combining it with hydrolyzed precipitate and glass frit;

3. Melt Cell, which vitrifies the feed prepared in the CPC, pours the molten glass into stainless steel canisters, and scrubs the melter offgas; and

4. Canister Closure and Decontamination, which seals the canister and cleans its exterior for transfer to the Glass Waste Storage Building (GWSB) and eventually to a Federal Repository.

5.1 Salt Process Cell

The washed slurry is transferred to the Precipitate Reactor Feed Tank (PRFT) in the Salt Process Cell for feeding to the Precipitate Reactor (PR). Prior to feeding, formic acid and copper catalyst (either copper formate or copper nitrate) are added to the reactor heel. Then the slurry is fed and the reactor is heated to boiling. Benzene is evolved as it is formed (the hydrolysis reactions begin as soon as the feed enters the PR) and the stepwise reactions continue through the aqueous boiling step. Other aromatic organics are steam stripped during aqueous boiling and are condensed with the benzene and water. The aqueous/organic condensate is decanted with the aqueous recycling to the PR and the organics to the Organic Evaporator (OE).

A second evaporation step is performed to assure the recovered organic waste is sufficiently decontaminated for transfer outside of the DWPF canyon (Stream 11) to the Organic Waste Storage Tank (OWST) and from there to the CIF. Water is added to the OE and the boiling, steam stripping, condensing, decanting cycle is repeated. The twice-distilled organic is collected in the OE Condensate Tank (OECT) and analyzed for activity and for mercury.

After steam stripping and cooling in the PR, the remaining aqueous phase is known as PHA (precipitate hydrolysis aqueous). The PHA is then transferred to the Precipitate Reactor Bottoms Tank (PRBT) where it held until fed to the Sludge Receipt and Adjustment Tank (SRAT). The $NaTi_2O_5H$, and the radionuclides which were adsorbed on the titanate, remain with the aqueous phase and are ultimately fed to the melter.

All vessels in the SPC are collectively maintained under a slight vacuum and vented through the chilled Salt Cell Vent Condenser (SCVC) into the Process Vessel Vent Header (PVVH). The primary purpose of the

SCVC is to limit benzene emissions and to prevent a flammable benzene mixture in the PVVH. The PVVH exhausts to the atmosphere through the sand filter after combining with the Zone 1 ventilation system.

SPC Chemistry

The washed and concentrated Cs,KTPB precipitate/$NaTi_2O_5H$ slurry is acid hydrolyzed and steam stripped in the Salt Process Cell. The purpose is to remove the aromatic organics from the Cs-containing aqueous stream which is ultimately fed to the melter because high concentrations of organic interfere with melter operation. The desired reaction is

$$Cs,KB(C_6H_5)_4 + HCOOH + 3\,H_2O \xrightarrow{Cu^{+2}} Cs,KCOOH + 4\,C_6H_6 + B(OH)_3$$

resulting in soluble Cs formate and benzene. However, since the reactions involve free radicals and ionic species such as nitrite, byproducts are formed such as phenol, biphenyl, aniline, diphenylamine, terphenyl, etc. Because of the presence of the volatile, flammable benzene, all the process vessels in the SPC are purged with CO_2 (or N_2) to maintain the O_2 concentration below the Minimum Oxidant for Combustion.

Another reaction of interest is the reduction of diphenyl mercury (precipitated by TPB during In-Tank Precipitation) to elemental mercury. The reaction proceeds by formic acid cleavage to the phenyl mercuric ion followed by reduction to elemental mercury. This reaction must occur sufficiently to meet the CIF limit on mercury since the biphenyl mercury easily steam strips to the recovered organic phase.

5.2 Chemical Process Cell (CPC)

The function of the Chemical Process Cell (CPC) is to complete preparation of the melter feed and to collect and adjust the aqueous recycle stream.

Sludge (Stream 4) which has been prepared in Extended Sludge Processing (aluminum dissolved and washed) is transferred into the Sludge Receipt and Adjustment Tank (SRAT). Sufficient nitric acid is added to react components such as nitrite and carbonate, to obtain an acidic pH (required for control of slurry rheology), and to provide the required reduction-oxidation balance between formate and nitrate. During coupled operations, PHA is then added to the SRAT (or during sludge only operation formic acid is added directly) and excess water is boiled off, condensed, and collected in the SME Condensate Tank (SMECT); if an antifoam is needed in the SRAT or SME, Dow Corning 544 will be used. Excess formic acid in the PHA also contributes to desired pH as well as reducing HgO to elemental mercury and Mn^{+4} to Mn^{+2} (reduces foaming in the melter). Elemental mercury is steam stripped during the concentration step and is collected in the Mercury Water Wash Tank (MWWT). The mercury is periodically pumped to a shielded cell where it is acid washed, water washed, and vacuum distilled in preparation for eventual disposition (Stream 12).

The acidified and concentrated sludge and PHA are then transferred to the Slurry Mix Evaporator (SME) where glass frit slurry is added and excess water is again boiled off, condensed, and collected in the SMECT. If any composition adjustments are required, the trim chemicals are added in the SME prior to transferring the combined sludge, PHA, frit slurry to the Melter Feed Tank (MFT). The melter is fed continually from the MFT.

All the vessels in the CPC are maintained at a slight vacuum and collectively vented through the chilled Formic Acid Vent Condenser (FAVC) into the PVVH, and ultimately to the atmosphere. The primary purpose of the FAVC is to limit mercury emissions. In addition to air leakage from the vacuum, air is added to CPC vessels to dilute potentially flammable concentrations of hydrogen (produced both by noble metal catalyzed decomposition of formic acid and by radiolysis), and benzene from the PHA. Also, the CPC vessel vent system incorporates three ammonia scrubbers (directly downstream of the SRAT and SME

condensers and on the RCT vent) to mitigate deposition of ammonia nitrate in ventilation system piping. (Ammonia is present in the precipitate slurry as NH_4TPB and is generated by chemical reaction in the SRAT; NO_X is generated from nitrite and nitrate reactions in the SRAT.) SMECT condensate is used for ammonia scrubbing and nitric acid will be added to the SMECT as needed to maintain the proper pH for scrubbing.

The RCT collects condensate from the SRAT and the SME and from the melter Off Gas Condensate Tank (OGCT) for recycle to Storage and Evaporation (Stream 10). Prior to transfer, NaOH and $NaNO_2$ are added to meet Storage and Evaporation inhibitor requirements. The RCT also periodically processes solutions from the Decontaminated Waste Treatment Tank (DWTT). These are neutralized solutions from equipment decontamination and solutions/slurries from dissolution of HEMEs (High Efficiency Mist Eliminator) and HEPAs (High Efficiency Particulate Air-filter).

Glass Composition Control

The melter feed elemental composition, and thus the glass properties of durability, viscosity, and liquidus are controlled. Slurry Mix Evaporator elemental sample analyses and glass property correlations are used to predict the glass product properties.

5.3 Melt Cell

The combined sludge, PHA, and frit are fed continuously to the melter where the mixture is vitrified and poured into stainless steel canisters. The melter is heated primarily by joule heating (resistance heating) from DC current passing through the molten glass. The secondary source is radiant heating from resistance heating of metal rods in the melter plenum.

The slurry from the MFT is fed onto the molten glass pool in the melter. Water from the slurry feed is vaporized and volatile organics are combusted in the plenum space or at the cold cap. (The cold cap is an "island" of feed material floating on the molten glass where much of the vaporizing and burning takes place. The cold cap disappears when the melter is not being fed.) Also several combustion and oxidation/reduction reactions occur generating off-gases of CO, CO_2, and NO_X. The sources of oxygen are air and nitrate. The primary reducing agent is the formate ion.

The melter offgas, which includes gases (CO, CO_2, hydrogen and NO_X), entrained glass, vaporized salts (sulfates, chlorides, borates), semi-volatile forms of Cs and Ru, and various forms of mercury, flows into the Melter Off Gas (MOG) system. The MOG system maintains the melter under a slight vacuum and sufficiently cleans the offgas stream for eventual venting to the atmosphere. The MOG system consists of

1. A film cooler and quencher, which use steam and water, respectively, to cool, condense, and partially scrub the offgas while minimizing plugging from salts and glass,

2. An Off Gas Condensate Tank which collects the condensate and removes heat,

3. Steam Atomized Scrubbers (SASs) which use steam and offgas condensate to scrub semi-volatile Cs and Ru from the non-condensable gases,

4. A chilled OGCT condenser which primarily limits elemental mercury emissions, and

5. A HEME and a HEPA to remove aerosols and particulates.

The melter feed composition is controlled such that a borosilicate glass with the required durability (leach rate) is produced. The radioactive components present in High Level Waste are immobilized either by becoming part of the glass matrix (for example, U and Pu) or by being encapsulated within the glass matrix

(for example, Cs and Sr). The molten glass is vacuum poured into a stainless steel canister where it is allowed to cool and solidify.

5.4 Canister Closure and Decontamination

After filling, the canister must be cleaned and sealed prior to transferring to the Glass Waste Storage Building (GWSB) where the canisters will be temporarily stored until the Federal Repository is ready (Stream 9).

The first step is the insertion of a temporary plug called the Inner Canister Closure. The purpose of the Inner Canister Closure is to exclude water during the subsequent cleaning step.

During filling, the heat from the molten glass causes formation of an oxide coating on the canister. This coating is contaminated with radioactivity which could easily spread unless the canister is cleaned. Decontamination is accomplished in either of two Canister Decontamination Chambers (CDCs) by blasting the canister with a dilute slurry of glass frit followed by rinsing with clean water. Smear testing is performed to assure the canisters are sufficiently clean to move on to the weld test cell.

The final closure is made by forcing the Inner Canister Closure and the canister nozzle into the canister neck and then welding the final weld plug using an upset resistance welding process. The canister is smear tested once more before transfer to the GWSB.

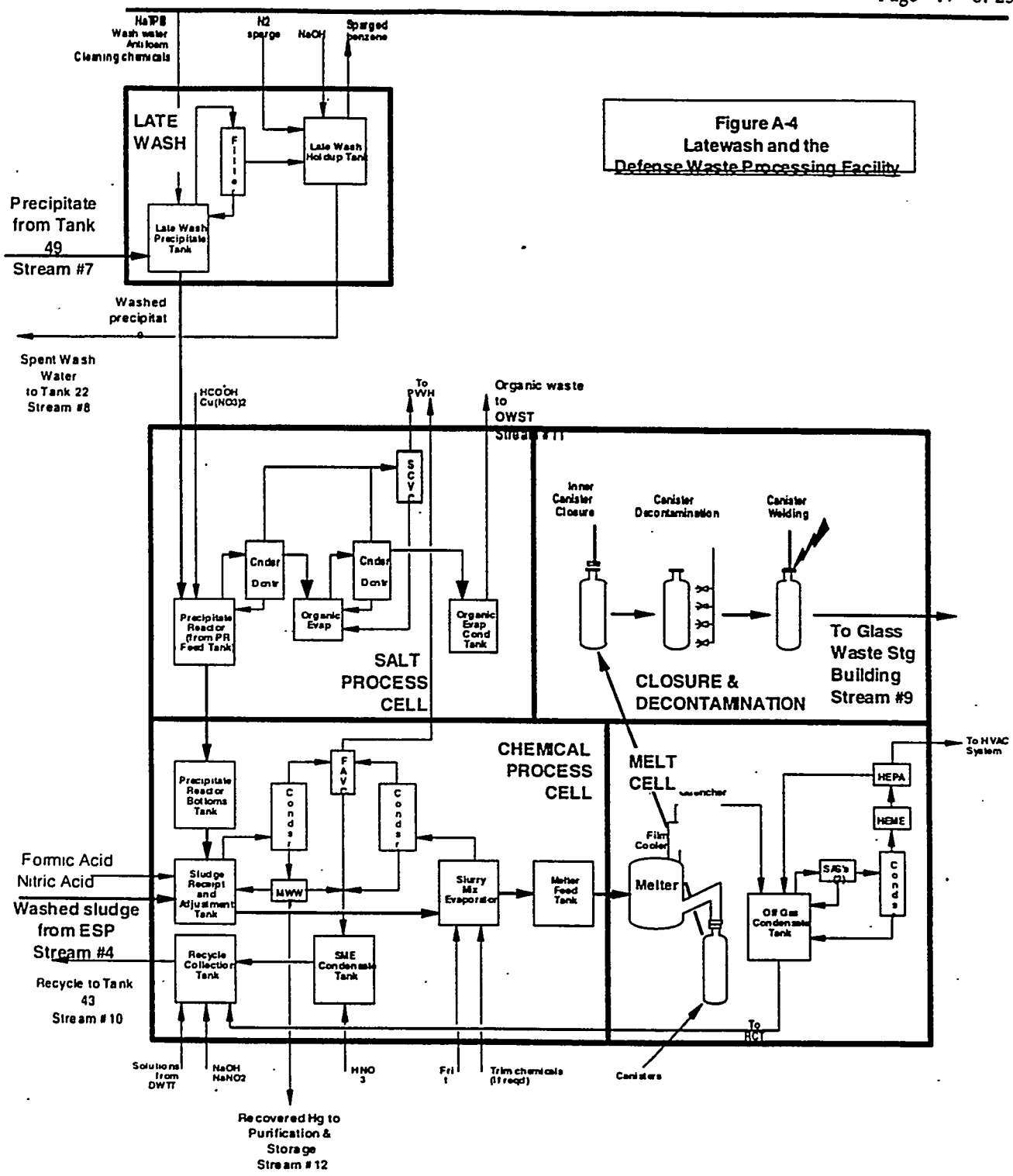

Figure A-4
Latewash and the
Defense Waste Processing Facility

6.0 Effluent Treatment Facility (ETF)

The function of the Effluent Treatment Facility (ETF) is to collect, treat, and discharge all radioactively contaminated process wastewater from the High Level Waste Division. A diagram of the ETF process is shown in Figure A-5.

6.1 ETF Description

Various generators discharge dilute wastewater streams into the process sewers, which drain by gravity to ETF's F&H area lift stations, and are then pumped to the ETF Treatment Plant. The wastewater consists primarily of evaporator overheads from the Storage and Evaporation and the Separations facilities (Stream 13).

The ETF treatment plant decontaminates the influent wastewater through a series of steps consisting of pH adjustment, sub-micron filtration, heavy metal and organic adsorption, reverse osmosis, and ion exchange. After the treatment steps remove specific species, the treated effluent is analyzed and discharged to the environment through a NPDES permitted outfall (H-016).[A-51] The treatment steps concentrate the contaminants into a smaller volume of secondary waste, which is then further concentrated by evaporation. Various chemicals are used to restore the process efficiency (e.g., filter cleaning, ion exchange regeneration) and the spent solutions also sent to the evaporator. The ETF evaporator bottoms are then pumped to Tank 50H for eventual disposal in Saltstone.

Each step in the ETF treatment process has certain capabilities and certain vulnerabilities:

- The wastewater influent is pH adjusted to maximize solids removal in the filter system. This adjustment is done continuously and also on a batch basis.

- The sub-micron filtration process removes suspended solids, but it can be overloaded by an excessive quantity of solids and can be fouled by certain types of suspended solids (e.g., bacteria). The filters are cleaned with oxalic acid, caustic, and chlorine (bleach). The feed can be treated with aluminum nitrate and/or ferric nitrate to reduce filter fouling.

- The resin used for heavy metal removal (e.g., mercury, lead) would be impacted by oxidizing agents (e.g., chlorine), and its effectiveness can depend on the species oxidation state (e.g., removes Cr^{+3}, but not Cr^{+6}). Excessive bacteria growths are removed by soaking the resin in caustic. After it becomes saturated, it is replaced. The spent resin is not a hazardous waste because it passes the EPA TCLP test.

- The activated carbon used for organic removal has a high capacity for some species (e.g., the TBP/NPH solvent used by Separations) and a lower capacity for others (e.g., phenol). If the influent wastewater contains an excessive quantity of some species (e.g., benzene) then the spent carbon disposal costs increase drastically (as a mixed waste).

- The reverse osmosis step can be overloaded by the dissolved salts which it is removing, and its removal efficiency depends on the specific species (e.g., it is better on nitrate than on ammonia). The RO membranes are cleaned with oxalic acid and/or caustic.

- The ion exchange resin used in the final treatment step is only effective on Cs-137. It is regenerated with a sodium nitrate solution at a frequency determined by the influent sodium content.

- In the ETF evaporator, most of the contaminant species go to the concentrate bottoms (to Tank 50H and then to Z-area), but a few species are volatile (e.g., metallic mercury, and ammonia if the pH isn't low enough).

The ETF is operated in accordance with several SCDHEC Industrial Wastewater Facility permits.[A-6]

After the ETF influent is processed through the sequence of treatment steps described above, the treated effluent stream is analyzed and discharged through NPDES outfall H-016 to Upper Three Runs Creek. The effluent's chemical content is controlled by the ETF Wastewater Permit[A-5] and the discharge radionuclide limits are set by DOE Order 5400.5[A-7] and WSRC's ALARA program for effluent doses.

ETF Concentrate

The contaminants, which ETF removes from the influent stream, are concentrated into 1-2% of the original volume. The evaporator bottoms concentrate is then pumped to Saltstone.

If the radioactive contamination level is too high for Saltstone, then the concentrate will be sent to Storage and Evaporation via HDB-8 . If the chemical content is unsuitable for Saltstone, then SCDHEC approval is needed for any alternate disposition.

Diverted Water Basins

The Separations Department normally discharges its non-contact cooling water directly to the environment, after monitoring to ensure that it is not radioactively contaminated. Likewise, the Storage and Evaporation process, ESP, and ITP each monitor and discharge their uncontaminated storm water (which also includes small flows or noncontact steam condensate and cooling water). If any stream is contaminated, it is then diverted to one of ETF's four large lined basins which segregate the water based on its source and degree of contamination. There are also several administrative or precautionary reasons for the generators to divert the streams to the basins.

If the radioactive content of the basin water is too high for the ETF treatment plant, then it will be sent to Storage and Evaporation via HDB-8. Due to the variety of compositions possible, such routing will be evaluated by HLWE on a case-by-case basis. A suitable amount of corrosion inhibitor (NaOH and/or $NaNO_2$) would have to be added at some point in the transfer. A large volume of contaminated water would probably be involved in any diversion and could consume a large fraction of the Tank Farm's spare volume available.

Figure A-5 Effluent Treatment Facility

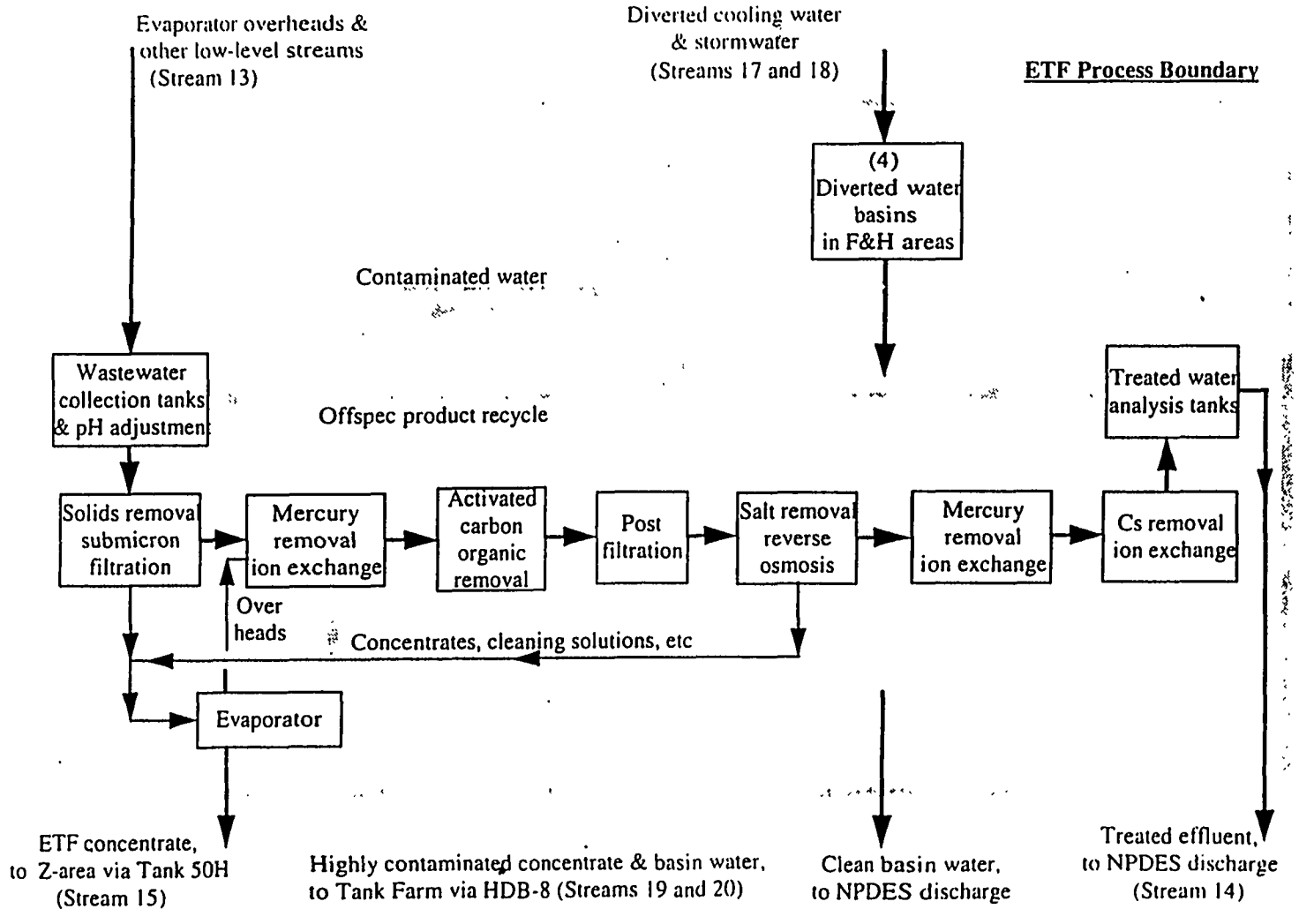

7.0 Saltstone

The Saltstone Production Facility (SPF) and the Saltstone Disposal Facility (SDF) are both located in Z-Area at the SRS. The function of these Z-Area facilities are to: 1) process aqueous salt solution waste in the SPF in a safe and environmentally sound manner to generate a Low-Level Waste grout-like wasteform known as Saltstone; and 2) dispose of Saltstone in a safe and environmentally sound manner by placing the Saltstone in concrete vaults that are located in the SDF. Controls are imposed on waste sent to Z-Area to limit the hazards of operating Z area and to ensure that the cured Saltstone is non-hazardous.

7.1 Saltstone Process

In the Saltstone Production Facility, aqueous salt solution is received from ITP and ETF and is then combined with a blend of cement, flyash and blast-furnace slag to generate non-hazardous LLW Saltstone (Fig. A-6). The Saltstone grout is pumped through a pipeline from the Saltstone Production Facility to a covered cell of an above-grade, concrete vault. The grout solidifies into a monolithic, non-hazardous solid waste called Saltstone. No aqueous waste streams are released directly to the environment or sent to other facilities from Z-Area.

Major equipment components of the Saltstone Production Facility include: (1) bulk storage silos for dry feeds; (2) dry feed blending and transfer equipment that includes the Premix Feed Bin; (3) the Salt Solution Hold Tank (SSHT) that receives aqueous salt solution to be processed; (4) the Flush Water Receipt Tank (FWRT) that receives equipment flushes and liquids collected in sumps located in Z-Area; (5) a Mixer that blends waste solution (and flush water, when necessary) with dry feeds to produce nonhazardous Saltstone grout; (6) a Saltstone Hold Tank (SHT) that provides a reservoir of grout to prevent cavitation of the grout pumps; (7) grout pumps; and (8) pipelines that are used to transfer salt solutions, flush water and Saltstone grout within the production facility and grout to the disposal vaults.

Since the Salt Solution Hold Tank and the Flush Water Receipt Tank can contain potentially hazardous contaminants and radioactive contaminants, both tanks are isolated from the immediate environment by secondary containment (concrete dikes). Because Z-Area facilities are designed to allow contact maintenance, radioactive contaminants in waste sent to Z-Area must be sufficiently low to prevent excessive radiation exposure to workers in Z-Area.

Because Saltstone is nonhazardous, the Saltstone Disposal Facility is designed as a "controlled release" landfill disposal site. The only long-term potential risk to the environment and to the general public is through possible degradation of surface water or groundwater quality due to a release of chemical or radioactive pollutants from the SDF into surface streams or into the underlying groundwater. Such releases are mitigated by the surrounding concrete vaults and the Saltstone waste form, itself. Final site closure will further mitigate the potential long-term risk to the environment. Monitoring wells are installed in accord with permit requirements to periodically monitor the groundwater for contaminants that could be released from the SDF.

Figure A-6: Saltstone

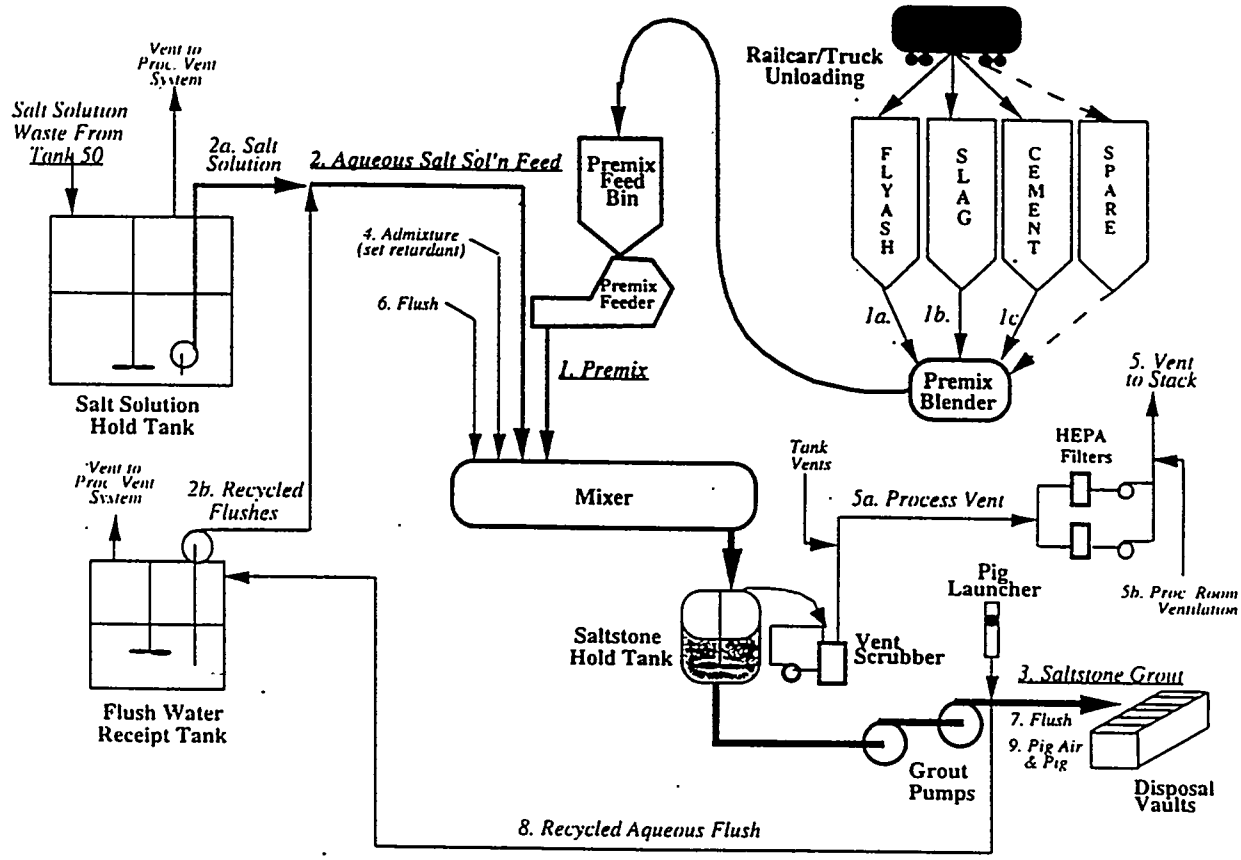

8.0 References

A-1 P. D. d'Entremont, et. al. "High Level Waste System Process Interface Description", WSRC-TR-(S-0442, Rev 0, September 1994.

A-2 "As-Built Construction Permit Application for an Industrial Waste Treatment Facility for the F- and H-area High-Level Radioactive Waste Tank Farms," Rev. 0, April 1991

A-3 "DWPF Late Wash Facility," WSRC-RP-92-793, Rev. 3, February 1994

A-4 M. C. Chandler, "HLW Criticality Safety Program Plan," Rev. 0, HLW-HLE-94-0385, February 22, 1994

A-5 SCDHEC Wastewater Permits 14624, 13105, 12870, and 14020.

A-6 SCDHEC Wastewater Permit SC0000175

A-7 DOE Order 5400.5, "Radiation Protection of the Public and the Environment"

ATTACHMENT 7

Preconceptual-Phase I Initial Design Input

Savannah River Site
High Level Waste Salt Disposition
Systems Engineering Team

Preconceptual - Phase I

Initial Design Input

Revision Date: April 2, 1998

Approved: for Steve Piccolo

Steve Piccolo: HLW Salt Disposition Systems Engineering Team Leader

Problem Statement

The existing In Tank Precipitation (ITP) process cannot simultaneously meet the high level waste (HLW) flow sheet production requirements and the safety requirements [Reference 1].

Mission Need

The Savannah River Site (SRS) high level waste (HLW) salt needs to be immobilized for final disposition in support of environmental protection, safety, and current and planned missions [Reference 1].

SAVANNAH RIVER SITE
HIGH LEVEL WASTE SALT DISPOSAL

MISSION FUNCTION LEVEL 1

F-1: Safely and cost effectively process salt from SRS high level waste (HLW) tanks to a final permitted waste form(s) [Figure 1 and Reference 1].

MISSION REQUIREMENTS LEVEL 1

The function defined in F-1 above:

R-1-1: Shall meet all applicable federal, state, and SRS safety requirements.
R-1-2: Shall meet all applicable federal, state, and SRS environmental regulations.
R-1-3: Shall meet all applicable federal, state, and SRS final disposal product quality requirements.
R-1-4: Shall meet all applicable facility Waste Acceptance Requirements.
R-1-5: Shall meet all applicable Federal Facilities Agreements (FFA) and Site Treatment Plan (STP) commitments.
R-1-6: Shall accommodate other SRS missions and associated schedules.
R-1-7: Shall meet the HLWM division test standard SW-4 implementation (startup).
R-1-8: Shall meet the constructability requirements defined by the Construction Industry Institute in Publication 3-1.
R-1-9: Shall have the minimum evaluated combination of programmatic and technical risk and life cycle cost.
R-1-10: Shall meet the Defense Nuclear Facility Safety Board (DNSFB) Recommendation 96-1 as applicable (Reference 2)

Protect

F-1.1: Protect personnel and the environment from hazards and releases of waste and pollution.

F-1.1.1: Minimize personnel exposure to hazards.

R-1.1.1-1: DOE 5483.1A, Occupational Safety and Health Program for DOE Contractor Employees at Government-Owned Contractor-Operated Facilities.
R-1.1.1-2: 29 CFR 1910, Occupational Safety and Health Standards.
R-1.1.1-3: 10 CFR 830, Nuclear Safety Management.
R-1.1.1-4: 10 CFR 835, Occupational Radiation Protection.
R-1.1.1-5: DOE Order 420.1, Facility Safety.
R-1.1.1-6: DOE Order 440.1, Worker Protection Management for DOE Federal and Contractor Employees.
R-1.1.1-7: DOE Order 5480.23, Nuclear Safety Analysis Reports.
R-1.1.1-8: DOE-STD-1027, Hazard Categorization and Accident Analysis Techniques.
R-1.1.1-9: DOE/EH-0256T, DOE Radiological Control Manual.

F-1.1.2: Minimize releases of radiological hazards to the environment.

R-1.1.2-1: Clean Air Act (42 U.S.C. 7401).
R-1.1.2-2: SCDHEC Air Quality Control Permit.
R-1.1.2-3: Clean Water Act (33 U.S.C. 1251).
R-1.1.2-4: Safe Drinking Water Act (42 U.S.C. 3001).
R-1.1.2-5: Title 40 CFR 61, Subpart H.
R-1.1.2-6: DOE Order 5400.5, Chapter II.
R-1.1.2-7: 40 CFR Part 68, Risk Management Programs for Chemical Accidental Release Prevention.

F-1.1.3: Minimize releases of chemical hazards to the environment.

R-1.1.3-1: Clean Air Act (42 U.S.C. 7401).
R-1.1.3-2: SCDHEC Air Quality Control Permit.
R-1.1.3-3: Clean Water Act (33 U.S.C. 1251).
R-1.1.3-4: Safe Drinking Water Act (42 U.S.C. 3001).

R-1.1.3-5: Title 40 CFR 61, Subpart H.
R-1.1.3-6: DOE Order 5400.5, Chapter II.
R-1.1.3-7: 40 CFR Part 68, Risk Management Programs for Chemical Accidental Release Prevention.

F-1.1.4: Minimize waste.

R-1.1.4-1: Pollution Prevention Act (PPA) of 1990.
R-1.1.4-2: Resource Conservation and Recovery Act (RCRA) of 1976.
R-1.1.4-3: Comprehensive Environmental Response, Compensation, and Liability Act (CERCLA) of 1980.
R-1.1.4-4: DOE-SR environmental protection requirements given in DOE-SR Directive Implementation Instructions (DIIs) (5400.1A, General Protection Plan; 5400.2A, Environmental Compliance Issue Coordination; 5400.4A, Mandatory ES&H Standards; 5400.5, Radiation Protection of the Public and the Environment).
R-1.1.4-5: DOE SR-5000-29, Handbook for Erosion and Sediment Control on the Savannah River Site.
R-1.1.4-6: 10 CFR Part 1021, National Environmental Protection Act (NEPA).
R-1.1.4-7: Clean Air Act (CAA) of 1972 and Clean Air Act of 1963 (mostly recently amended in 1990), and State laws and regulations.
R-1.1.4-8: Executive Order 12856, Federal Compliance with Right-to-Know Laws and Pollution Prevention Requirements.
R-1.1.4-9: DOE Order 5400.1, General Environmental Protection Program.
R-1.1.4-10: DOE Order 5820.2A, Radioactive Waste Management.
R-1.1.4-11: DOE's 1994 Waste Minimization/Pollution Prevention Crosscut Plan.

Receive

F-1.2: Receive SRS waste streams

R-1.2-1: Shall be capable of receiving the H Canyon Low & High Heat Waste stream.
Nominal Stream Composition being: [TBD]

R-1.2-2: Shall be capable of receiving the F Canyon Low & High Heat Waste stream.
Nominal Stream Composition being: [TBD]

R-1.2-3: Shall be capable of receiving the DWPF Recycle waste water stream.
Nominal Stream Composition being: [TBD]

R-1.2-4: Shall be capable of receiving the HLW Tank Wash Water waste.
Nominal Stream Composition being: [TBD]

R-1.2-5: Shall be capable of receiving the ESP Wash Water Waste stream.
Nominal Stream Composition being: [TBD]

R-1.2-6: Shall be capable of receiving the Receiving Basin for OffSite Fuels (RBOF) Waste.
Nominal Stream Composition being: [TBD]

R-1.2-7: Shall be capable of receiving the Resin Regeneration Facility (RRF) Waste.
Nominal Stream Composition being: [TBD]

R-1.2-8: Shall be capable of receiving the SRTC High Level Waste stream.
Nominal Stream Composition being: [TBD]

R-1.2-9: Shall be capable of receiving the Analytical Laboratory Waste stream.
Nominal Stream Composition being: [TBD]

R-1.2-10: Shall be capable of receiving the Spent Decontamination Solutions Waste stream from the Tank Maintenance Facility (299-H).
Nominal Stream Composition being: **[TBD]**

R-1.2-11: Shall be capable of receiving the Highly Contaminated Cooling Water waste stream.
Nominal Stream Composition being: **[TBD]**

R-1.2-12: Shall be capable of receiving the Highly Contaminated ETF Concentrate waste stream.
Nominal Stream Composition being: **[TBD]**

Store

F-1.3: Store existing and received waste streams.

R-1.3-1: Storage systems, structures, or components (SSC) shall meet the Authorization Basis corrosion control plan (Reference 3).

R-1.3-2: Storage capacity shall meet Authorization Basis and FFA requirements (Reference 3).

R-1.3-3: Storage SSC's shall be capable of handling heat loads defined in Authorization Basis (Reference 3).

R-1.3-4: Storage SSC's shall meet the existing structural integrity programs defined in Authorization Basis (Reference 3).

R-1.3-5: Storage SSC's shall meet the flammable material inventory limits defined in the Authorization Basis (Reference 3).

Treat

F-1.4: Treat SRS HLW salt into a final permitted waste form(s).

Note: Requirements R-1.4-1, R-1.4-2 and R-1.4-3 must be met by all design options while R-1.4-4 and R-1.4-5 must be met if an interface exists.

R-1.4-1: Treatment shall achieve SRS production needed to support the FFA & STP commitments.

R-1.4-2: Treatment shall meet reliability, availability, maintainability, and inspectability requirements (Reference TBD).

R-1.4-3: Treatment shall meet NUREG 0700 standard (Nuclear Regulatory Commission Human-System Interface Design Review Guide) human factor requirements.

R-1.4-4: Treatment shall meet the following product quality specifications, as applicable, for:

R-1.4-4.1 GLASS DISPOSAL FORM REQUIREMENTS:

- R-1.4-4.1.1 Glass leachability shall be acceptable as defined by current DWPF limits
- R-1.4-4.1.2 Liquidous temperature (crystallization temperature) shall be less than melter operating temperatures
- R-1.4-4.1.3 Canister heat generation must not exceed Glass Waste Storage Building Limits
- R-1.4-4.1.4 Glass insolubles (salts) shall not exceed solubility limits (crystallize out)
- R-1.4-4.1.5 Viscosity shall be within DWPF melter design limits

R-1.4-4.2 SALTSTONE DISPOSAL FORM REQUIREMENTS:

Concentration of individual radioactive contaminants shall not exceed NRC Class A low level waste requirements

R-1.4-4.3 OTHER DISPOSAL FORM REQUIREMENTS:

- R-1.4-4.3.1 On-Site: Concentration of individual radioactive contaminants shall not exceed NRC Class C Low Level or RCRA mixed waste requirements
- R-1.4-4.3.2 Off-Site: Shall comply with DOE-RW High Level Waste Repository Requirements.

R-1.4-5: Treatment shall meet HLW flow sheet interface requirements as shown in Figure 2 and Table I.

a) FUNCTIONAL MODEL:

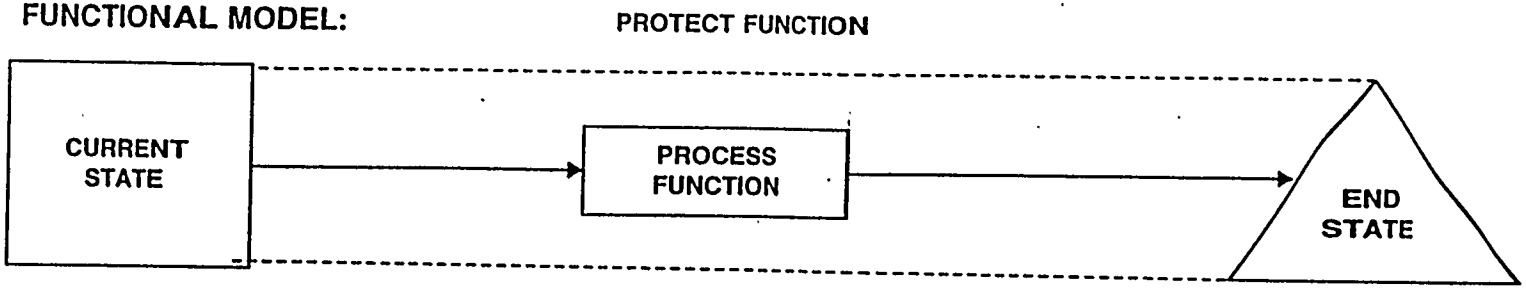

b) UNIVERSAL MODEL: (includes all possible solutions)

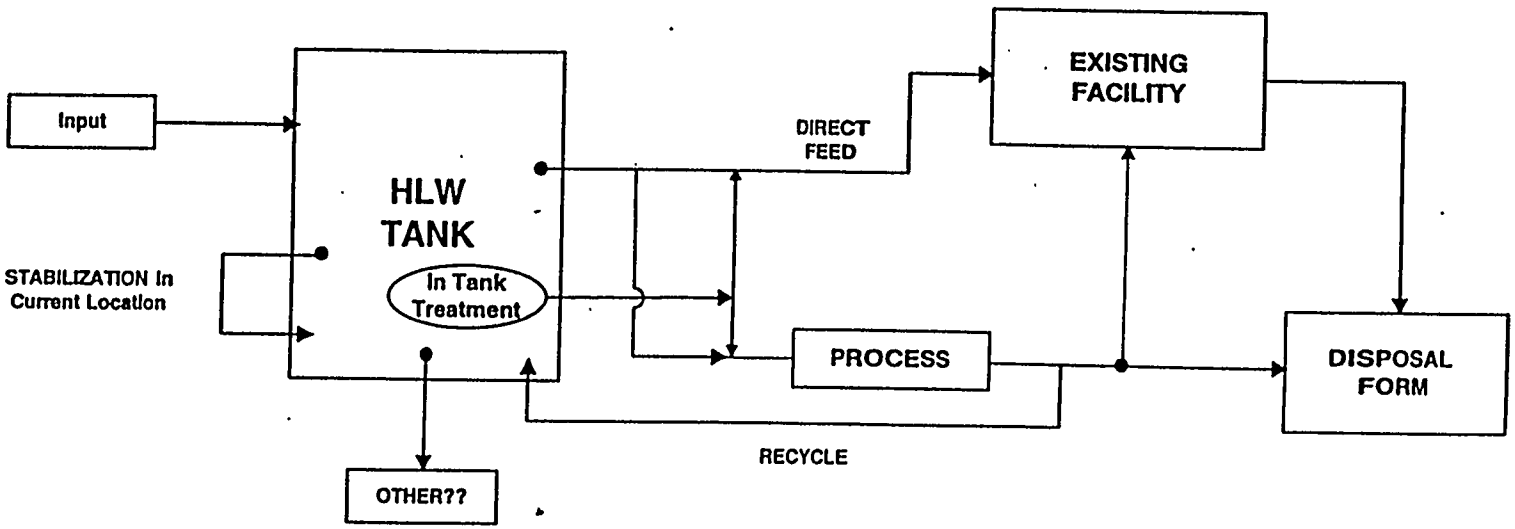

Figure 1 - Function F-1

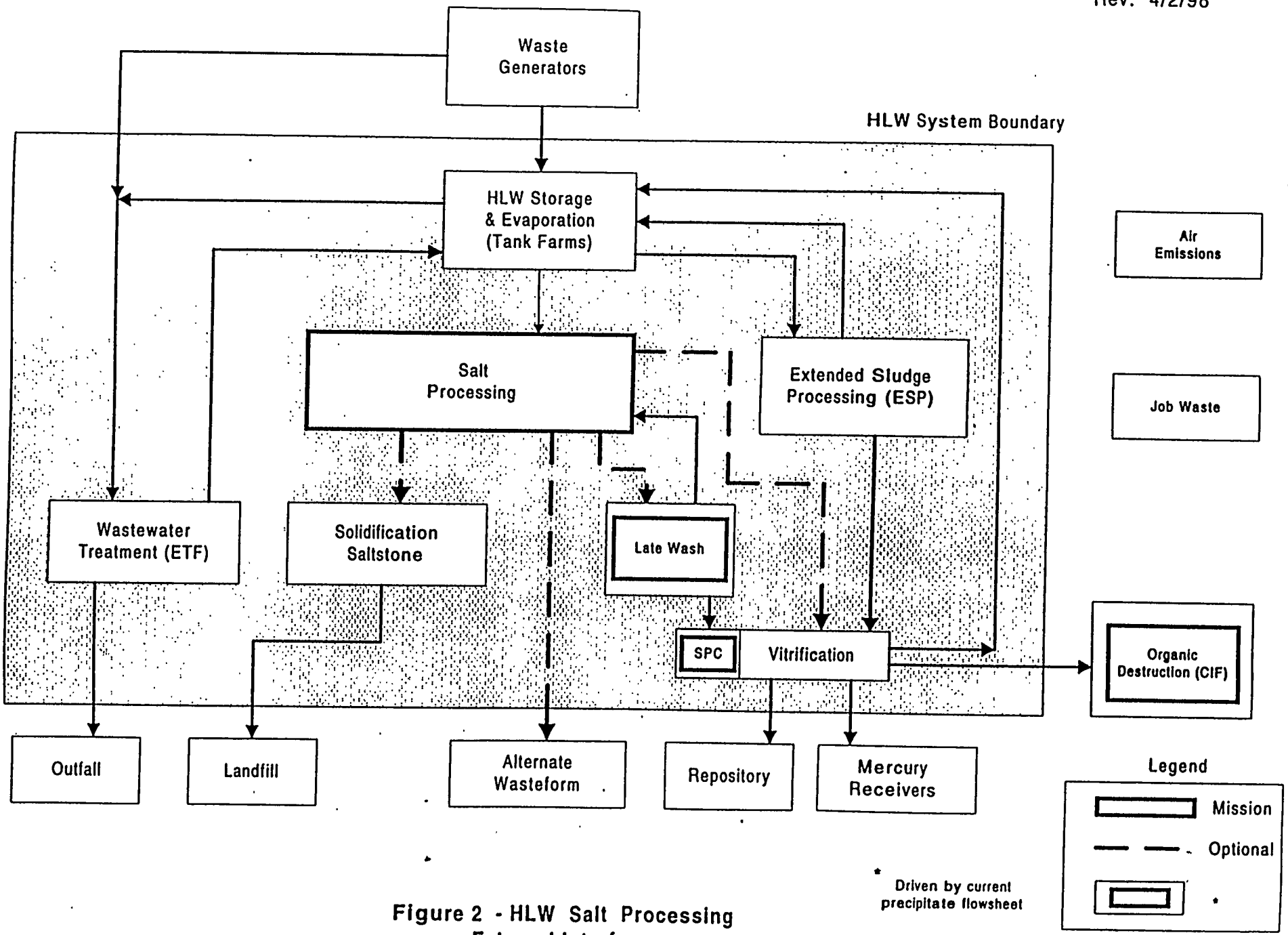

Figure 2 - HLW Salt Processing External Interfaces

TABLE – I
HLW Salt Disposition Flow Sheet Interface Requirements

Threshold Limit Requirements for Tank Farm Storage [Reference 4]	Threshold Limit Requirements for Saltstone [Reference 4]	Threshold Limit Requirements for DWPF [Reference 4]
Corrosion Prevention	Saltstone Non-Hazardous	Air Quality
Flammables	Radionuclides < Limit	Shielding Design Basis
Source Term - Type IV Tanks	Water Soluble Radionuclides	SAR Source Term
Source Term other Tanks	pH > 10	Durable Glass
Transfer Line Rad Receipt	Temperature < 40° C	Solubility in Glass
Criticality		Heat Generation in Glass
SAR Source Term		20 < Glass μ < 100 poise
		Corrosiveness
Threshold Limit Requirements for Other Effluent [Reference 4]		
Activity to CIF < 1000 d/m/ml		
Combustible in CIF		
ETF NPDES Permit		
Saltstone Effluent Limits		

Terms and Definitions

1. Assumption: Not a validated piece of information, but sometimes required to facilitate other design input or output activities. All assumptions carry risk and should be evaluated for consequences during the risk analysis stage.

2. Basis: The rational, declaration, and/or start point for a decision, method, and/or analysis.

3. Constraint: Limits or Thresholds that exist for a system, boundary, external interface, and/or component which have been established by programs, policy, standards, the physical laws of nature, or empirical definition and must be addressed and complied with by all solutions/alternatives. Example: Recycle Flow may never exceed 100 gpm or have a rate change greater than 10 gpm/hour.

4. Dispose: Final permitted waste form.

5. External Interface: Any input to or receipt of output from the function specified.

6. Function: A qualitative statement of what a solution must do using a verb/noun format, e.g., "Pump water". A function must have at least one requirement.

7. Hold: A piece of information with some, but not complete, validation or traceability. There is risk associated with "Holds" and should be evaluated for consequences during the risk analysis stage.

8. ISMS: Integrated Safety Management System (ISMS) is the methodology, applicable to the design, construction, operations, transition and D&D phases of a facility lifetime, which implements the DOE environmental, health, and safety programs as a single initiative through the application of the following five steps:

   i) Define the work and how it is to be accomplished.
   ii) Analyze the hazards entailed in performing the work.
   iii) Identify the controls necessary to perform the work safely and include them in design, construction, operational, transitional, and D&D procedures.

Terms and Definitions

8. ISMS (continued)

iv) Perform the work as planned, using adequately trained personnel: and,
v) Assess how well the system worked, and feed back the evaluation results to reinforce and improve the process

Life Cycle Cost (LCC) equals acquisition costs plus ownership costs plus disposition costs, less any revenues, and less any salvage. [LCC = TPC + O&M + D&D - Revenues - Salvage]
(DOE LCC Estimating course PMCE01, Version 1.0/July 1997)

10. Requirement: A quantitative, measurable statement that specifies "how well" a function must perform, e.g., "20 gpm". Requirements can be performance, interface, design criteria, and/or other constraints placed on the function.

11. TBD: To Be Determined is simply an information "placeholder". NOT knowing it at the present time does not impede near term development of design input or output. There is risk associated with TBD's and should be evaluated for consequences during the risk analysis stage.

12. Treat: To act upon via mechanical, chemical, nuclear, and/or administrative means (extended in situ storage is presumed to require administrative action).

References

1. Letter (HLW-OVP-98-0020) from Scott to Schepens, entitled, "HLW Salt Disposition Systems Engineering Team Charter (U)", dated March 13, 1998.

2. Letter from Schepens to The Honorable John T. Conway, entitled, "DNSFB Recommendation 96-1 Implementation Plan - Suspension of Restart Activities at the In-Tank Precipitation (ITP) Facility", dated March 3, 1998.

3. WSRC-IM-94-10 , "WSRC HLWMD Authorization Basis List Manual".

4. High Level Waste Salt Disposition Interface Document (WSRC-type-yy-xxxx).

ATTACHMENT 8

High Level Waste Salt Disposition Systems Engineering Team Position Paper on Identifying Alternatives to the In-Tank Precipitation Process

ATTACHMENT 8

SAVANNAH RIVER SITE

HIGH LEVEL WASTE SALT DISPOSITION SYSTEMS ENGINEERING TEAM

POSITION PAPER

ON

IDENTIFYING ALTERNATIVES

TO THE

IN-TANK PRECIPITATIION PROCESS

APPROVED: _____ DATE: 3-24-98

Steve Piccolo: HLW Salt Disposition
Systems Engineering Team Leader

PURPOSE

The purpose of this position paper is to document the methods used by the WSRC HLW Salt Disposition Systems Engineering Team for solicitation of alternate technology to safely and cost effectively process salt from SRS high level waste (HLW) tanks to a final permitted waste form(s).

The result of the approach described, herein, is a "long list" of ideas from which the Team can begin the selection process.

BACKGROUND

The DOE complex in the US and other organizations worldwide have been developing and implementing high level waste immobilization and disposal methods for the past several decades.

In Europe, as well as other foreign countries, waste has been predominantly stored in a concentrated acid form in stainless steel tanks. Immobilization processes have then relied on direct vitrification of that waste stream. In the US (SRS, Hanford, West Valley, Oak Ridge) the waste was neutralized with strong caustic and stored in carbon steel tanks. This separates the waste into an insoluble sludge fraction (about 10%) of hydrated metal oxides containing most of the radionuclides (strontium, plutonium, uranium, and others). The remaining salt solution is primarily sodium nitrate, hydroxide and nitrate with cesium-137 as the predominant radionuclide. This is stored as a solution or a concentrated saltcake.

At SRS, an organic precipitating agent (sodium tetraphenyl borate), was selected as the preferred method of separating cesium and feeding that to the DWPF for treatment, mixing with the radioactive sludge, and feeding to the melter. The decontaminated salt (which is the bulk of the waste) can then be fed to a lower cost grouting facility for onsite disposal. The precipitation process was developed and demonstrated on a full scale radioactive tank in the mid 1980's. However, recent large scale tests and an extensive R&D program have shown operating and authorization basis drawbacks sufficient for SRS to re-evaluate the alternatives for salt treatment processes to minimize all the risks.

DISCUSSION

Multiple methods for obtaining information on alternative salt treatment technologies were considered.

a) a review of past decisions on the selection of treatment alternatives in the DOE complex
b) a review of high level waste treatment technologies in the U.S. and internationally
c) input from industry via a "request for information" in the *Commerce Business Daily* publication

d) in-house brainstorming sessions including off-site participants
e) subject matter expert reviews
f) SRS employee input
g) literature search

Each method for soliciting ideas has positive attributes and drawbacks. The key drawback around any general industrial search is that most of the information will come from suppliers with no radioactive or safety basis methodology expertise.

SELECTED METHODS

A combination of approaches was determined to be the most effective means for obtaining information on alternative salt treatment technologies. These are shown in flow diagram form on the attachment. The specific approaches are discussed below:

- Historic Reviews

  The Savannah River Technology Center (SRTC) will survey the SRTC, Hanford and Oak Ridge facilities for relevant experience upon which to develop a list of alternatives from within the DOE Complex. An overview of international experience in this area will be performed.

- Independent Subject Matter Expert Reviews

  The academic and commercial sectors team members will review their respective field of expertise to solicit ideas for alternative technologies or practices, e.g. in chemical processing and bio-remediation.

- Formal Brainstorming

  Approximately twenty-five candidates will be selected to participate in formal brainstorming sessions. The participants will consist of major stakeholders, individuals with specific technical expertise and others with broad creative abilities. The participants will be split into two groups and each group will perform a facilitated brainstorming session. This will keep the group sizes to a workable level and provide two independent lists of potential alternatives.

- SRS Employee Input

  Over the years, many SRS personnel have been involved with either the ITP process or other salt disposition activities, but have subsequently moved on to other jobs at SRS. This solicitation of the broad employee base is an effort to receive additional ideas and process alternatives to ITP. As such, the Team has developed a "briefing package" which, in very general terms, defines the problem, mission need, top level function and requirements, and an all encompassing flow model for discussion purposes.

  A one-page "pro-forma" sheet is included for individual employees to submit their ideas for further consideration.

- Literature Search

  A literature search will be conducted and a report issued to provide a reference to the available technologies for HLW salt treatment. Any alternatives uncovered that were not included in the initial screening will be evaluated for possible inclusion.

OUTPUT

The output from the identification of alternatives to the ITP process will be the initial "long list" of ideas. Grouping of similar ideas and alternatives will occur to the extent that salient features are not lost in the summarizing process.

PROCESS FOR DERIVING "LONG LIST" OF ALTERNATIVES

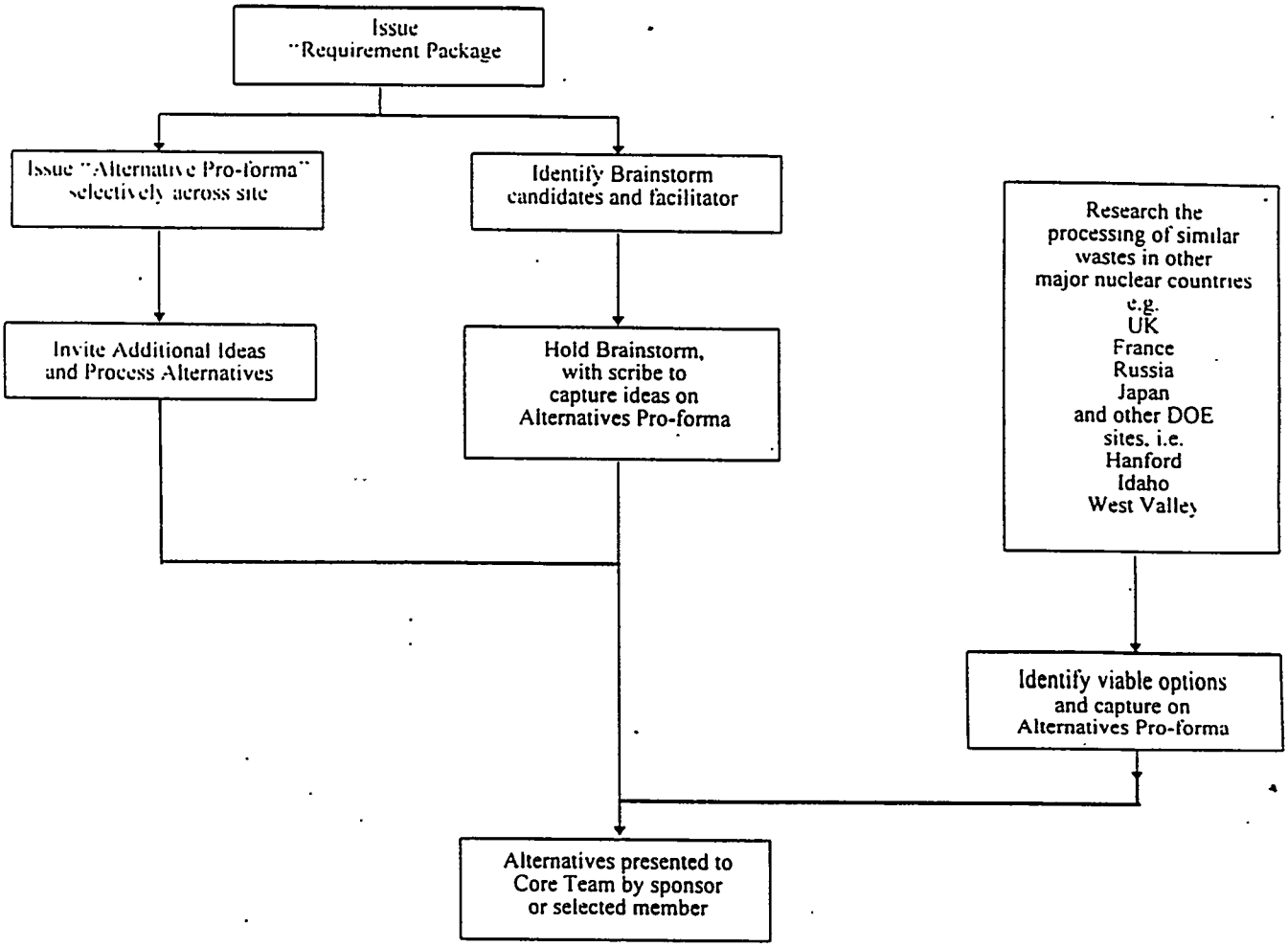

ATTACHMENT 9

Identification of Alternatives Briefing Package

ATTACHMENT 9

SAVANNAH RIVER SITE
High Level Waste Salt Disposition

Identification of Alternatives
Briefing Package

March 12, 1998

Approved: P9 Hudson p.p. STEVE PICCOLO

Steve Piccolo: HLW Salt Disposition Systems Engineering Team Leader

INTRODUCTION

With the recent decision to pursue alternative methods/technologies to the existing In Tank Precipitation (ITP) process, the HLW Salt Disposition Systems Engineering Team has been formed with the charter to identify and select a preferred alternative. The Team has put this briefing package together to facilitate the solicitation of ideas and/or concepts which will be reviewed for viability and future consideration.

The contents of this briefing package include:

* A Problem Definition Statement
* The Mission Need Statement
* The top level functions (F-1) and associated requirements which must be satisfied by any proposed solution
* A simplified functional and universal model which encompass all conceivable alternatives
* Alternative idea description form and instructions for completing

These items are intended to provide only general guidance to prospective participants who wish to submit ideas on the alternative description form. Anyone needing more detailed information should contact a member of the Systems Engineering Team.

Problem Statement

The existing configuration for the In Tank Precipitation (ITP) process cannot simultaneously meet the high level waste (HLW) flow sheet production requirements within the proposed Authorization Basis.

Mission Need

The Savannah River Site (SRS) high level waste (HLW) salt needs to be immobilized for final disposition in support of environmental protection, safety, and current and planned missions.

SAVANNAH RIVER SITE
HIGH LEVEL WASTE SALT DISPOSAL

MISSION FUNCTION LEVEL 1

F-1: Safely and cost effectively process salt from SRS high level waste (HLW) tanks to a final permitted waste form(s).

MISSION REQUIREMENTS LEVEL 1

The function defined in F-1 above:

R-1-1: Shall meet all applicable federal, state, and SRS safety requirements.
R-1-2: Shall meet all applicable federal, state, and SRS environmental regulations.
R-1-3: Shall meet all applicable federal, state, and SRS final disposal product quality requirements.
R-1-4: Shall meet all applicable facility Waste Acceptance Requirements.
R-1-5: Shall meet all applicable Federal Facilities Agreements (FFA) and Site Treatment Plan (STP) commitments.
R-1-6: Shall accommodate other SRS missions and associated schedules.
R-1-7: Shall meet the HLWM division test standard SW-4 implementation (startup).
R-1-8: Shall meet the constructability requirements defined by the Construction Industry Institute in Publication 3-1.
R-1-9: Shall have the minimum evaluated combination of programmatic and technical risk and life cycle cost.

HLW SALT DISPOSITION SYSTEM ENGINEERING TEAM MODEL

FUNCTIONAL MODEL:

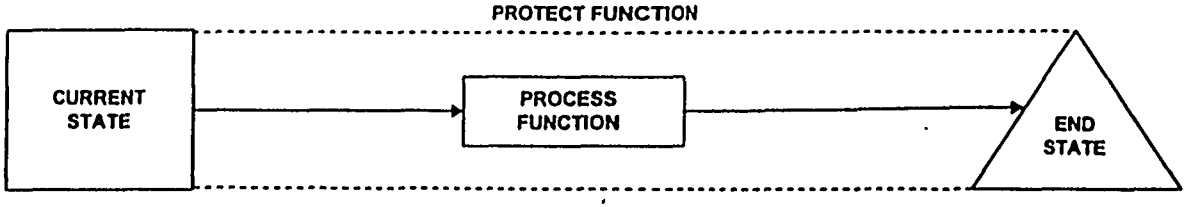

BASIS

-COMPOSITION
Sodium 8.0M
Hydroxide 4.6M
Nitrite 1.1M
Nitrate 1.6M
Aluminate 0.4M
Carbonate 0.3M
Potassium 0.05M

.1% Entrained Sludge which includes Plutonium & Stronium Carryover

- SPECIFIC GRAVITY
1.1 to 1.5
-PH
>14.0
-RADIONUCLIDES
Cs-137 5.5 ci/gal
Ba-137 5.5 ci/gal
Actinides 0.04 ci/gal

GLASS DISPOSAL FORM REQUIREMENTS

1) Glass Leachability shall be acceptable as defined by current DWPF limits
2) Liquidous Temperature (Crystallization Temperature) shall be less than Melter Operating Temperatures
3) Canister Heat generation must not exceed Glass Waste Storage Building Limits
4) Glass Insolubles (Salts) shall not exceed solubility Limits (Crystallize Out)
5) Viscosity shall be within DWPF Melter Design Limits

SALTSTONE DISPOSAL FORM REQUIREMENTS

1) Concentration of Individual Radioactive Contaminants shall not exceed NRC Class A Low Level Waste Requirements

OTHER DISPOSAL FORM REQUIREMENTS

On-Site
1) Concentration of Individual Radioactive Contaminants shall not exceed NRC Class C Low Level Waste Requirements
Off-Site
1) Shall comply with DOE-RW High Level Waste Repository Requirements

UNIVERSAL MODEL:

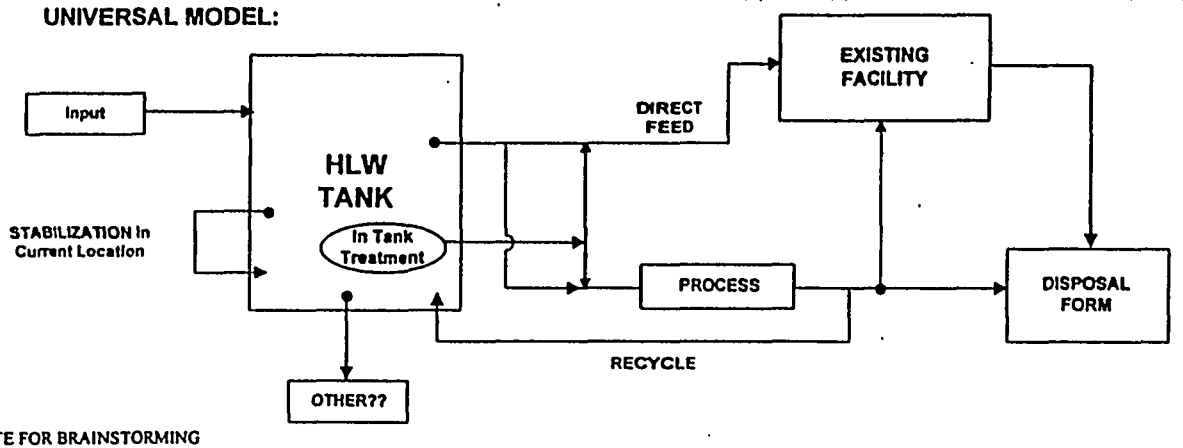

TEMPLATE FOR BRAINSTORMING

3/16/98

HLW SALT DISPOSITION PROCESS ALTERNATIVES

Alternative #:_____ **Sponsor:**_____ **Date:**_____

Originator:_____ **Phone #:**_____

Title:_____

_____

Description:_____

_____

_____

_____

_____

_____

_____

_____

_____

_____

Technical Maturity:_____

_____

_____

_____

Safety Issues:_____

_____

_____

_____

Advantages:_____

_____

_____

_____

_____

Disadvantages:_____

_____

_____

_____

_____

EXPLANATORY NOTES FOR "ALTERNATIVES PRO-FORMA"

Alternative # will be provided by Peter Hudson.

Sponsor could be originator, a suitable "champion" or a core team member.

Date - Date submitted.

Originator - name and phone number needed for follow-up purposes.

Title should capture the key unit operations of the proposed process.

Description should be a single paragraph technical description of the steps involved in the proposed process, clearly identifying where use is made of existing HLW processes/facilities.

Technical Maturity - one of the key criteria in ranking alternative processes. Define the current development status of the process, e.g. theoretical idea; chemistry proven in lab; fully commercialized for non-nuclear applications; full nuclear operation.

Safety Issues - another key criterion. Recognizing that benzene generation became a major safety issue on ITP, what significant safety issues would have to be tackled on this process? e.g. hazardous chemicals, risk of explosion, high temp and pressure.

Advantages and Disadvantages - apart from safety and technical maturity, what are the other principal advantages and disadvantages of the proposed process, e.g. simplicity, cost, operability, use of existing facilities.

Process Diagram (Optional) - If you can, sketch out the principal steps of the process, showing interaction with existing facilities, on the back of the sheet.

Completed Forms should be returned to Peter Hudson, either by e-mail or hard copy to 705-3C, or FAX 7-6526 by no later than 3/27/98. Otherwise return to a member of the Core Team: Steve Piccolo, Lou Papouchado, John Carlson, Ken Rueter, Jeff Barnes or Gary Abell.