WSRC-MS-2002-00475

A Corrosion Monitoring and Chemical Species Probe for the Savannah River Site

J. I. Mickalonis, D. T. Hobbs, and E. M. Tshishiku
Westinghouse Savannah River Company
Aiken, SC 29808

This document was prepared in conjunction with work accomplished under Contract No. DE-AC09-96SR18500 with the U.S. Department of Energy.

DISCLAIMER

This report was prepared as an account of work sponsored by an agency of the United States Government. Neither the United States Government nor any agency thereof, nor any of their employees, makes any warranty, express or implied, or assumes any legal liability or responsibility for the accuracy, completeness, or usefulness of any information, apparatus, product or process disclosed, or represents that its use would not infringe privately owned rights. Reference herein to any specific commercial product, process or service by trade name, trademark, manufacturer, or otherwise does not necessarily constitute or imply its endorsement, recommendation, or favoring by the United States Government or any agency thereof. The views and opinions of authors expressed herein do not necessarily state or reflect those of the United States Government or any agency thereof.

This report has been reproduced directly from the best available copy.

Available for sale to the public, in paper, from: U.S. Department of Commerce, National Technical Information Service, 5285 Port Royal Road, Springfield, VA 22161, phone: (800) 553-6847, fax: (703) 605-6900, email: orders@ntis.fedworld.gov online ordering: http://www.ntis.gov/help/index.asp

Available electronically at http://www.osti.gov/bridge

Available for a processing fee to U.S. Department of Energy and its contractors, in paper, from: U.S. Department of Energy, Office of Scientific and Technical Information, P.O. Box 62, Oak Ridge, TN 37831-0062, phone: (865) 576-8401, fax: (865) 576-5728, email: reports@adonis.osti.gov

Abstract

A corrosion monitoring and chemical species probe for the Savannah River Site (SRS) has been developed for remotely monitoring the corrosion of the high level waste tanks and for measuring the concentration of waste constituents. The probe incorporates two technologies, Raman spectroscopy (RS) for chemical analysis and electrochemical noise (EN) for corrosion monitoring. The RS technology was optimized to measure the primary waste constituents, specifically nitrate, nitrite and hydroxide. EN monitoring measures the instantaneous current and potential difference fluctuations that occur between three identical electrodes which are similar to the tank wall.

An acceptance test, which was not performed under radiological conditions, was designed to verify the operation the RS, EN, the probe deployment reel and system control station. For RS, good measurements were made over the following concentration ranges; 0.1 to 10 molar for hydroxide, 0.1 to 5.0 molar for nitrate and 0.1 to 3.0 molar for nitrite. When the probe body was unperturbed, the EN signal displayed low amplitude and frequency waveforms that are typical for general corrosion.

I. Introduction

A corrosion monitoring and chemical species probe has been developed to directly monitor the corrosion in the high-level waste tanks at the Savannah River Site and to measure the concentration of waste constituents. The probe incorporates two technologies, Raman spectroscopy, for chemical analysis, and electrochemical noise, for corrosion monitoring. A deployable sensor, such as this probe, provides the capability of waste characterization and corrosion monitoring as a function of depth. The probe has been developed jointly by the Department of Energy, Westinghouse Savannah River Company, and several commercial vendors. This paper presents key design features and results from the cold acceptance testing of the combined probe.

II. Technology Description

Waste tank corrosion monitoring and control at the Savannah River Site (SRS) is provided currently by process knowledge, extensive laboratory test results (obtained largely in simulated wastes), and chemical analyses of tank grab samples. The procedure for pulling a tank grab sample involves numerous steps, puts personnel at risk of exposure, and takes up to one month per sample to obtain results. The limitations of the current system to provide accurate information of the tank corrosion and waste conditions ultimately limits the assessments of tank structural integrity and overall safety. The benefit of the SRS probe for real-time information of changing conditions within a high-level waste (HLW) tank will reduce the need for and cost associated with manual sampling, reduce the risk of personnel exposure, and improve the analysis of tank structural integrity and safety.

The Raman spectroscopy (RS) technology was optimized to measure the primary waste constituents involved in corrosion of the SRS high-level waste tanks, specifically nitrate, nitrite, and hydroxide. In this method, a probe containing two fiber optic lines extends into the waste. Laser light is focused into the waste inside the probe sample chamber, which emits light at different frequencies characteristic of the waste components. A collection fiber separates the emitted light from the excitation light and directs it to a spectrometer and detector for determination of individual species concentrations. RS could replace the present method, which requires pulling a sample of waste, transporting it to an analytical laboratory, preparing it, and performing two analytical measurements to obtain the concentrations of nitrate, nitrite, and hydroxide.

Electrochemical noise (EN) monitoring is designed to measure over set time intervals the instantaneous current and potential difference fluctuations

that occur between three identical electrodes. The SRS probe will have two sets of electrodes. One set will be made from A537 carbon steel, which is the material of construction for the wall of the last built tanks. The other set will be made of A106 carbon steel, which is the material of construction for the cooling coils. The measured current and potential fluctuations are caused by the corrosion reactions that occur on the electrode surfaces. Generally, these measurements have a given pattern for different corrosion processes, i.e., general corrosion, pitting, or stress corrosion cracking.

III. Work Description

Originally, plans were to deploy the Raman and EN probes separately. The two probes were combined into a single deployment platform to reduce the use of risers on a waste tank. Acquisition of both corrosion and chemistry data from the same location in the waste also increases the relevance of the data, since the two data sets can be directly correlated. The combined design emerged as a two-section probe body supported by a cable on the reel assembly. Fig. 1 is a schematic of the probe body. The reel assembly is not shown. This arrangement enabled measurements to be taken at different elevations within a waste tank.

The lower section of the probe body contains an internal chamber for chemical analysis. A porous metal filter occludes suspended particles in the tank waste from entering the Raman probe chamber. The presence of particles leads to significantly lower Raman signals and much higher detection limits. A vacuum/pressure/liquid line is connected between the top of the chamber to two pumps (one for liquid and one for air) outside the HLW tank. Waste solution is drawn into the chamber under vacuum. The chamber is flushed with water to remove waste solution. The liquid line also serves to introduce calibration standards into the chamber from outside the HLW tank. A quartz window on the side of the chamber is used to separate the Raman probe from direct contact with the waste solution. The lens of the probe faces the quartz window so that the excitation light focuses into the solution inside the chamber.

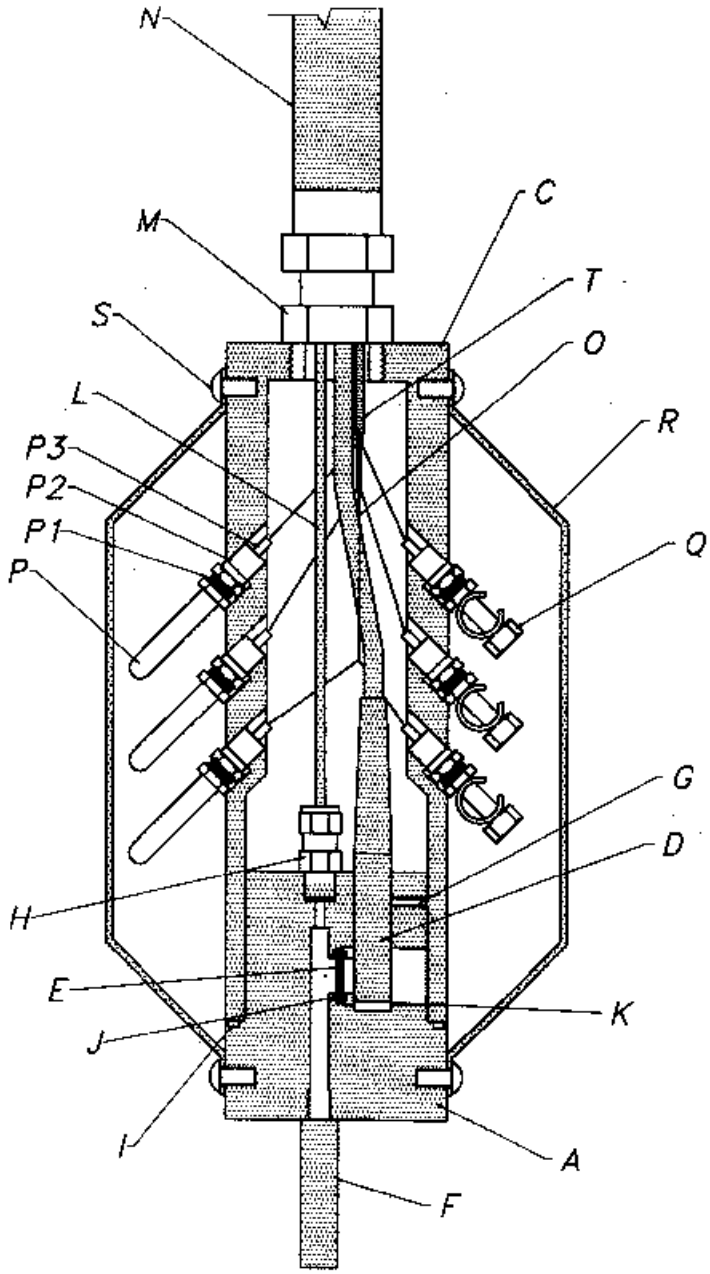

Fig. 1. Schematic of the SRS Corrosion and Chemistry Probe.

The upper section of the probe body houses the RS fiber optic cables, the vacuum/pressure/liquid line, and EN electrical wires. The EN electrodes are attached on the outside of the probe body so as to be in direct contact with the waste solution. Two sets of three electrodes, which are necessary for performing EN, are aligned linearly on each of the upper section of the probe body. The electrodes are bullet-shaped for the as-built probe, although in Fig. 1 one set is shown as c-rings. One set is made of carbon steel similar to that used for the tank wall; the other set has electrodes made of carbon steel similar to the cooling coils. The electrodes are electrically isolated from the probe body.

A watertight flexible stainless steel tube attached to the top of the probe body is used as a conduit to protect the sample tube, wires, and fiber optic cables that are used for the EN and RS monitoring technologies. The conduit is attached to the reel assembly, which allows the probe body to be set at different elevations within the waste tank. Fig. 2 is a schematic of the reel assembly. The reel assembly consists of the reel, the electric motor, the gear reduction box, and the absolute encoder. The electric motor is coupled to the reel via a 60:1 gearbox. An absolute encoder monitors the reel rotation and generates a GRAY CODE signal used by the controlling software to indicate the probe elevation and control the probe rate of

ascent/descent.

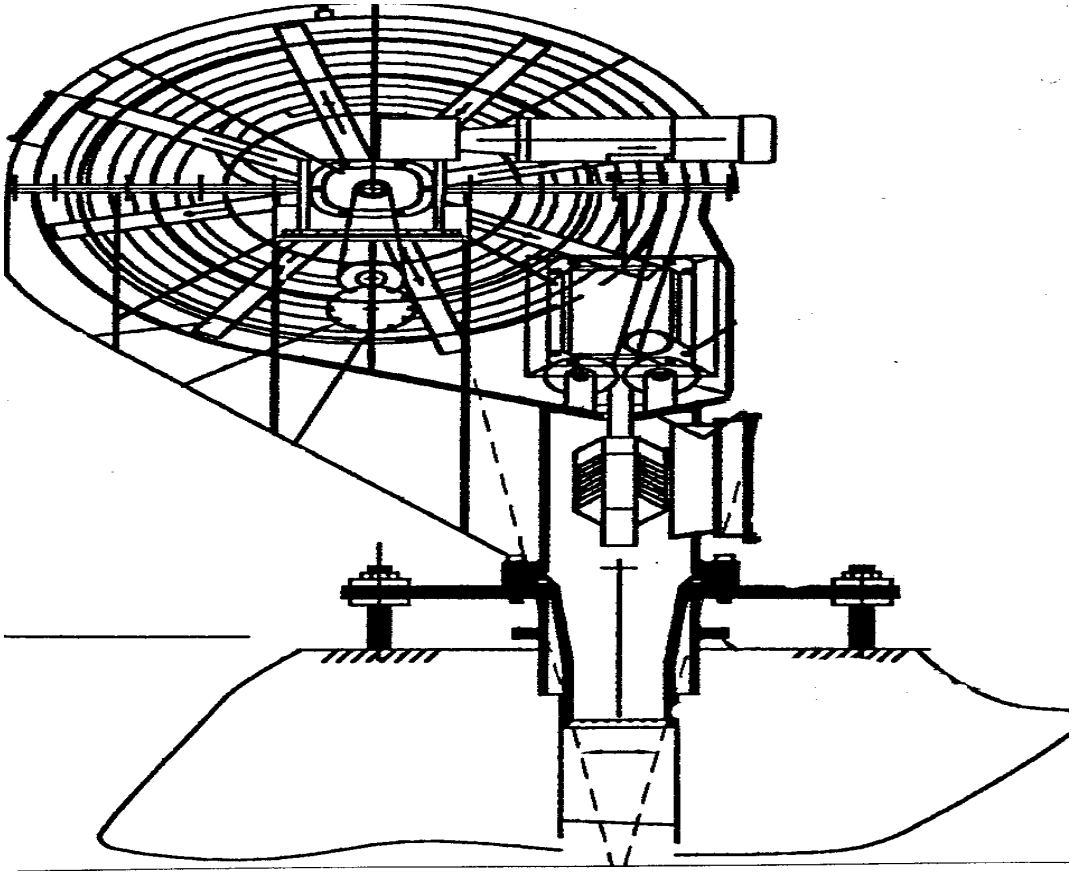

Fig. 2. Reel Assembly for Deploying and Adjusting the Probe.

The reel is mounted in a watertight stainless steel housing to minimize contamination on the tank top. The reel assembly is equipped with two thick glass windows designed to allow visual inspection of the probe electrodes while protecting the equipment operator against exposure to radiation. The lower portion of the reel assembly is filled with lead to reduce radiation shine through the tank opening. An internal spray ring washes radioactive contamination off of the probe and conduit during probe height adjustments.

Another major part of the probe system is the sample manipulator. The manipulator comprises solution tanks, stainless tubing, and solenoid-actuated valves. The manipulator is used to deliver calibration solutions, flush water, or purge air to the sample chamber in the lower section of the probe body. The reel assembly and the sample manipulator are controlled via a personal computer in which application softwares are loaded. These softwares include FIX32, AMULET, MOLECUE, and RAM/32. The fiber optic cables, EN wires, and tube all fit through an innovative twist section that allows the reel to rotate without shearing off the pneumatic line, fiber optic cable, or electric cables.

After the probe was fabricated, it was tested before installation in a waste tank. A 40-foot-high platform was assembled to fully test the reel assembly, sample manipulator, and the EN and RS techniques. A 55-gallon drum filled with a simulated waste solution was used as a mock waste tank for testing both EN and RS. After successful completion of the test, the probe was packaged and sent to SRS to be installed in Tank 43H. Tank 43H was chosen for this proto-type because it receives fresh waste from a variety of sources daily and, therefore, is subject to changing tank conditions.

IV. Results and Discussion

IV.A. Cold Test Results

The cold acceptance test was designed to verify the operation of the RS, EN, the reel assembly (including the spray ring), the sample manipulator, and the system control station. Cold acceptance testing successfully demonstrated the following functions:

- Movement of the probe assembly at a constant speed and positioning to a desired elevation
- Operation of pumps for the sample chamber, which included introduction of calibration standards, flushing, and purging
- Introduction of sample into the chamber using either the simulated waste head pressure or the vacuum generated by the air pump
- Software compatibility.

IV.B. Raman Analysis

Cold acceptance testing featured activities to assess operational readiness of the sample manipulator to deliver filtered waste solutions into the sample chamber, to flush and clean the sample chamber, to collect RS data in a flowing system, and to measure the RS response performance.

Testing demonstrated that the sample chamber could be filled and a RS acquired by pulling solution through the filter under vacuum or by pumping solution housed in reservoirs located in the control trailer. The flush, calibration, and purge systems functioned properly throughout the testing. Results indicate that the pump speed should be maintained at a minimum of 200 mL/min to ensure that the solution pump maintains solution in the feed chamber. When the flowrate was set at 100 mL/min, the Raman spectra exhibited reduced signal intensities for the nitrate, nitrite, and hydroxide peaks consistent with insufficient sample in the chamber during some period of the acquisition time.

Raman spectra acquired during the testing exhibited the expected peaks for each of the three analytes; nitrate, nitrite, and hydroxide. Fig. 3 shows a typical Raman spectrum obtained during the testing. Nitrate peaks appear at 720 and 1050 cm^{-1}, a nitrite peak at 820 cm^{-1}, and a hydroxide peak centered at 3615 cm^{-1} on the broad water peaks.

Table I shows the average normalized response factors during the two test periods as well as that measured previously using a prototype system at the Savannah River Technology Center (SRTC). The May results indicate lower response factors for the analytes compared to previous laboratory testing. The reduced response factors obtained in May were due primarily to a poor fiber optic connection at the reel union. This connection was repaired, and the system was tested again in July. After repairing the connection, the RS signal intensity increased significantly. The response factors were more similar to those previously measured using the prototypical system at SRTC.

Table I. Average Normalized Response Factors for each Analyte (counts-L/s-mole).

Analyte	Test #1	Test #2	SRTC
NO_3^- [a]	13.8	48.2	55.3
NO_3^- [b]	572	1290	1350
NO_2^-	39.1	103	89.7
OH^-	14.7	20.7	27.4

[a] determined using peak at 720 cm^{-1}
[b] determined using peak at 1050 cm^{-1}

The higher response factor for nitrite obtained in Test #2 compared to the SRTC results was due to a chemical impurity in the sodium nitrite chemical used to prepare the salt solutions for the Test #2. The unidentified impurity exhibited a peak that overlapped the nitrite peak. This impurity was not observed in the previous cold acceptance testing (Test #1) or earlier with the prototype system at SRTC using different sources of sodium nitrite.

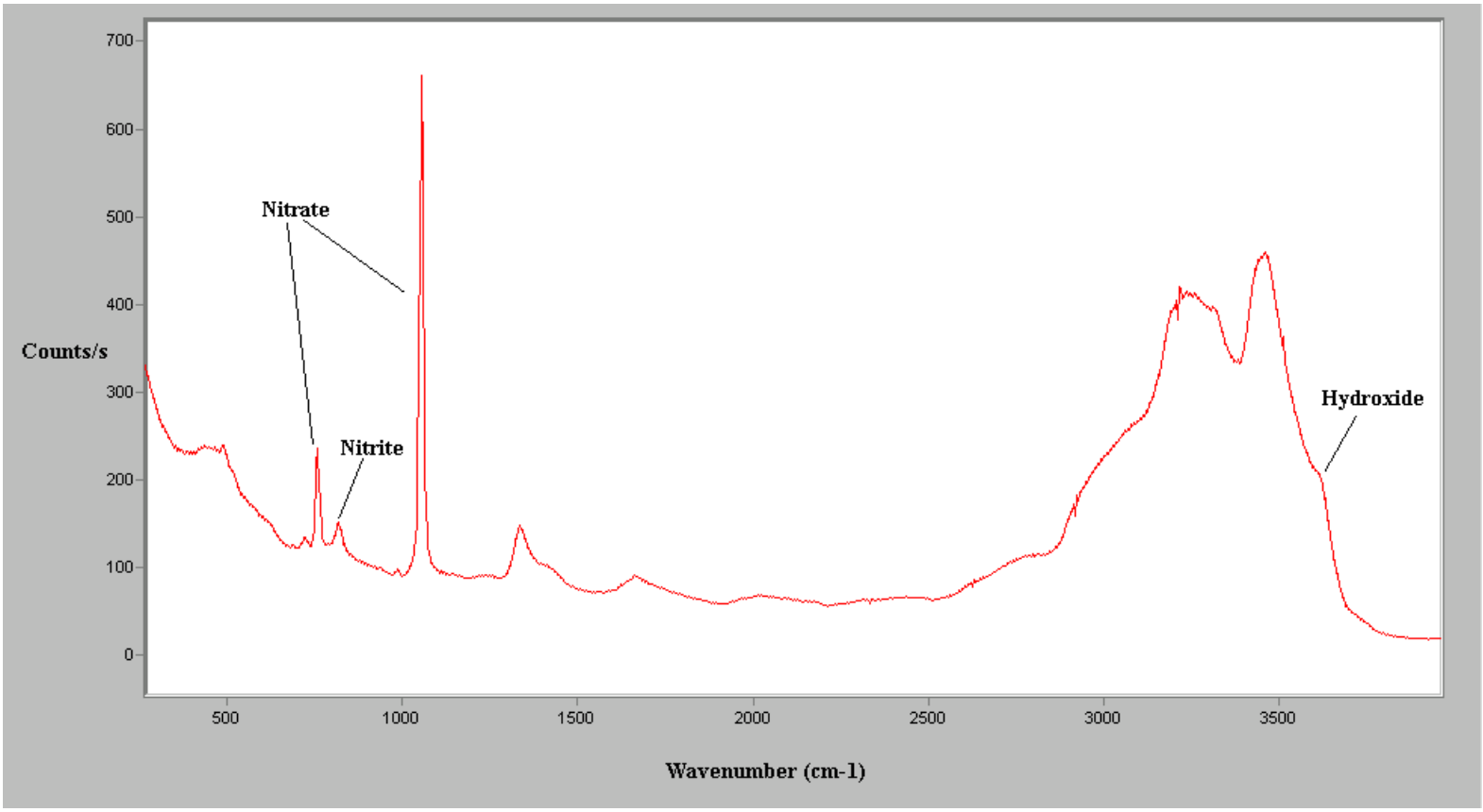

Figure 3. Raman Spectrum of a Solution Containing Sodium Nitrate, Sodium Nitrite, and Sodium Hydroxide.

Response factors for each of the analytes were determined over a range of concentrations, as follows: 0.1 to 10 molar for hydroxide, 0.1 to 5.0 molar for nitrate, and 0.1 to 3.0 molar for nitrite. Figure 4 shows plots of the concentration versus response factor for each analyte obtained during the initial testing. All analytes exhibited a highly linear dependency between response factor and concentration, as had been shown previously in laboratory studies.

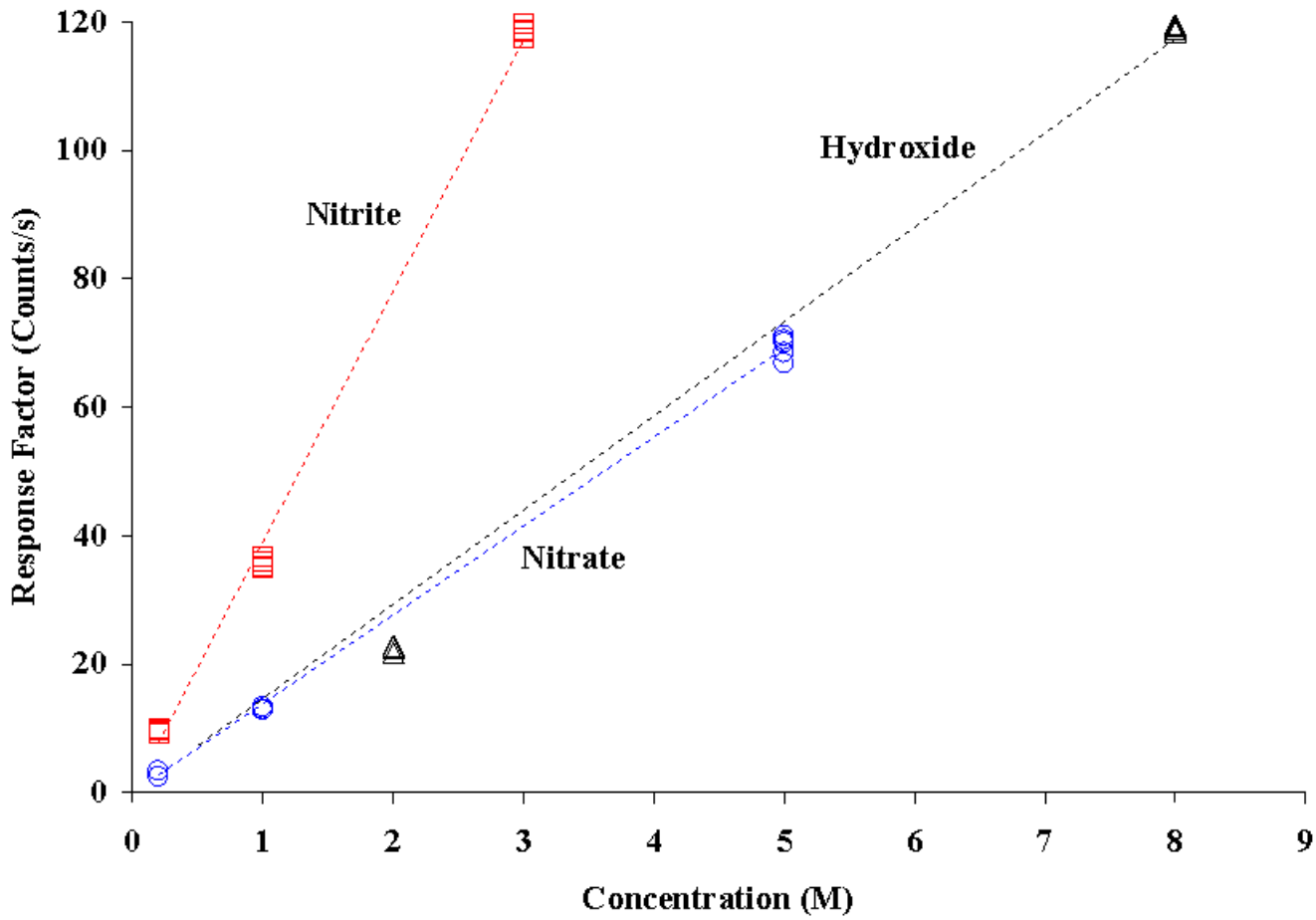

Figure 4. Response Factors versus Concentrations for each Analyte.

The linear dependence between response factor and concentration for each analyte confirms that the system can be calibrated under flow conditions. This is an important finding, since when the probe is deployed in the tank, continual flushing of the sample chamber may be required to prevent transport of waste solution into the sample chamber. Transport can occur due to the high head pressure (up to 30 ft) that the probe head would be subjected to when immersed into the tank waste.

Based on the measured response factors, the lower limits of detection for the Raman probe are 0.1 molar for nitrate and nitrite and 0.5 molar for free hydroxide. The detection limits for nitrate and nitrite are similar to that previously measured in the laboratory with the prototype probe. The limit for free hydroxide is a factor of 2.5 times higher (0.5 molar versus 0.2 molar). The free hydroxide detection limit should be adequate for deployment in Tank 43H, since the range of free hydroxide concentrations in supernate samples from this tank over the last five years ranged from 1.6 to 4.8 molar. Lower detection limits for hydroxide may be possible by increasing the acquisition time for obtaining the Raman spectrum. Alternate spectral analysis techniques (e.g., chemometrics) may also provide lower detection limits for the free hydroxide determination, as well as for nitrate and nitrite.

IV.C. Electrochemical Noise Monitoring

During the cold acceptance tests, the assessment of the electrochemical noise monitoring showed the system was ready for operation in a high-level waste tank. The system was tested once the probe head was immersed into the drum of simulated waste. Activities were carried out to show the system could be initiated, collect data over the time of activation, and document the effect of other probe operations on the EN signal.

Testing the EN system was initiated by placing the probe head into the 55 gallons of simulated high-level waste. The system software was initiated for collecting data prior to immersing the probe. The probe was immersed at the end of the day to allow the electrodes to stabilize overnight without operational interference. The RS was tested the following day. At the conclusion of the RS testing and day operations, the EN system was stopped and the probe was removed from the simulated waste.

The EN probe consists of two sets of three electrodes, each set made from different carbon steels (A106 and A537). The data signals collected from each set were the current and the potential. Figures 5 and 6 show the data collected for each electrode set during the entire test period. Note that the current data for the sets are plotted on different scales. The A106 electrodes had greater changes during the initial stabilization. The two sets of data have essentially similar patterns, which is expected since both sets were fabricated from carbon steels. The data sets, however, are not identical, which is an important result. If the sets were identical, cross talk between the various electric wires carrying the data would be suspect.

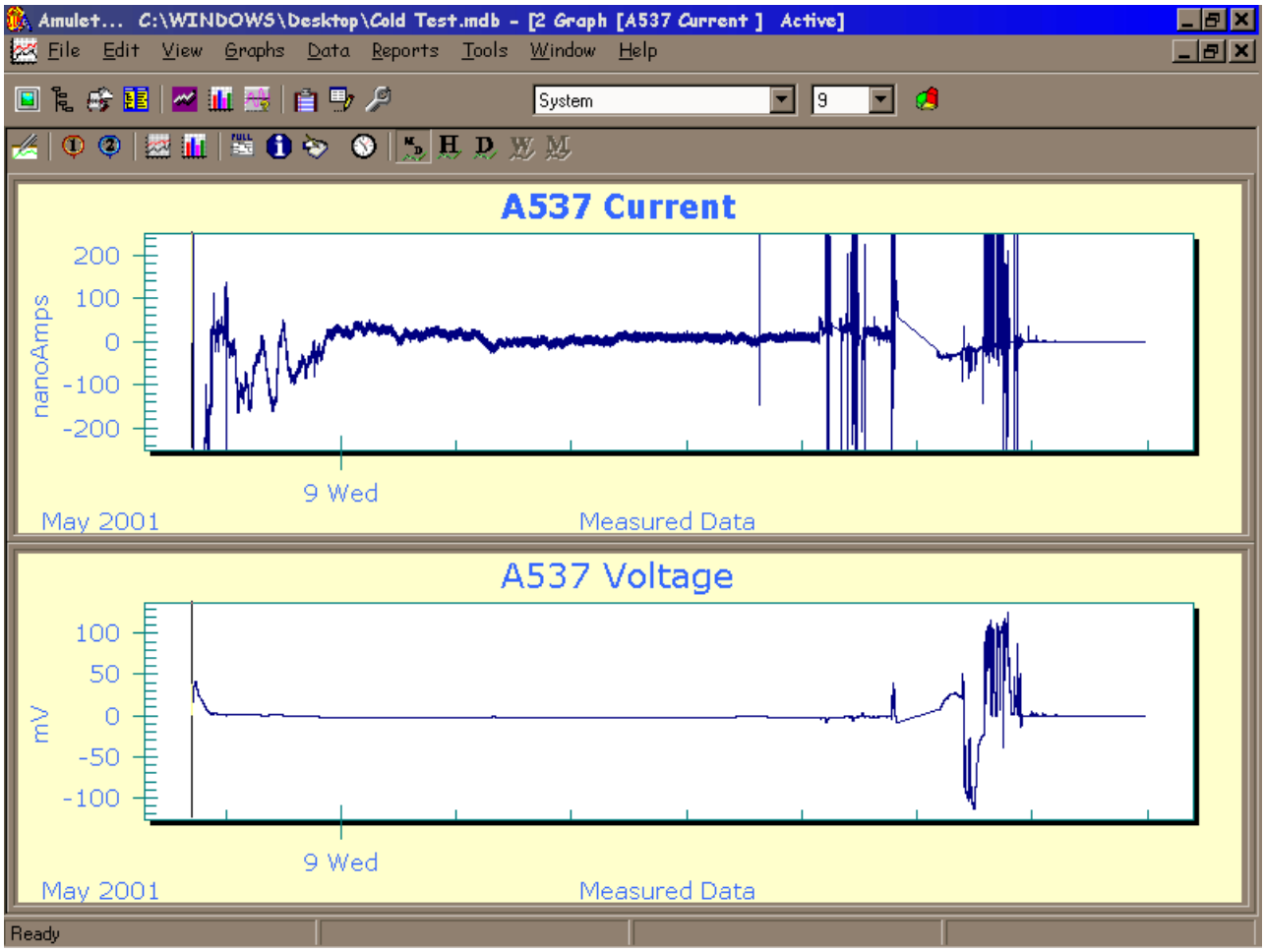

Figure 5. Current and Potential Noise Signals from A537 EN Electrodes.

As can be seen from both sets of electrodes, the current and potential data both trended toward a zero current flow and zero potential difference. This expected result occurs since the electrodes are essentially identical and the environment, inhibited waste, is not highly corrosive to carbon steel. Large differences in the current and potential data would indicate possible electrical problems in the electrode set.

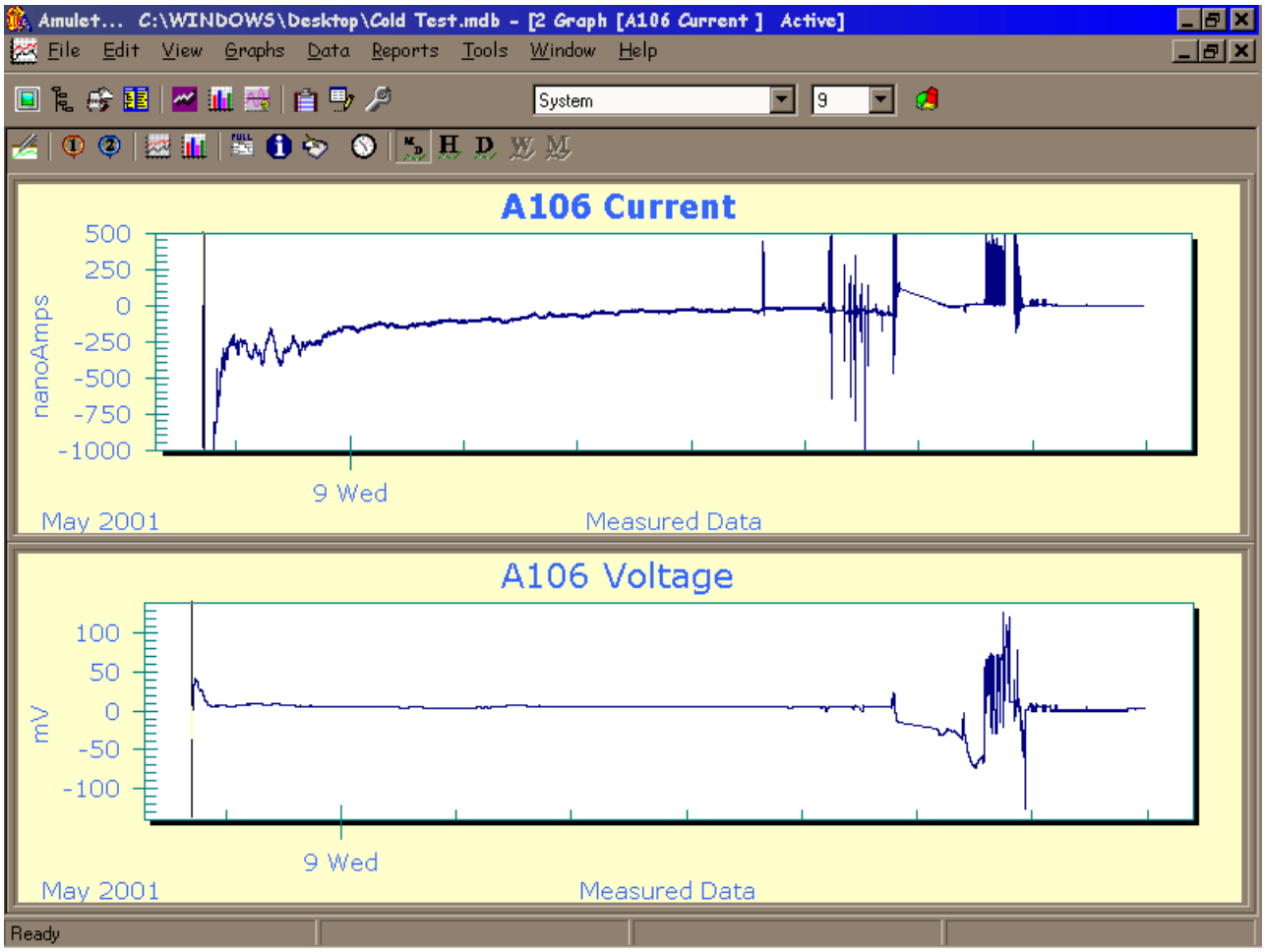

Figure 6. Current and Potential Noise Signals from A106 EN Electrodes.

All of the probe software functioned properly during the cold acceptance testing. No electrical interference was detected between the EN probes and the probe movement system. The extended period of overnight stabilization did show, however, that the probe reached equilibrium in fairly short time (approximately 6 hours). The exact start of RS testing is not certain on the time scale for Figures 5 and 6 since the computer clock was not initially set to local time. As expected the RS testing did impact the EN signals.

Filling and expelling the sample chamber with the different solutions changed the waste solution composition in contact with the electrodes. These changes in solution composition resulted in sharp fluctuations to the potential and current signals shown in Figures 5 and 6. After some period of time during which no further filling or flushing of the sample chamber occurred, the EN signals returned rapidly to a steady-state condition. Note that the current signal experienced larger disturbances than did the potential.

V. Conclusion

A corrosion monitoring and chemical species probe has been developed to directly monitor the corrosion in the high level waste tanks at the Savannah River Site and to measure the concentration of waste constituents. The probe incorporates two technologies, Raman spectroscopy for chemical analysis and electrochemical noise for corrosion monitoring. The combined corrosion and chemical species probe was designed to minimize the impact on waste tank operation while maximizing the relevance of the data to the chemistry and corrosion control program. Recent acceptance testing demonstrated successful operation of all the major system components under nonradiological conditions. Plans are underway to deploy the probe at SRS in Tank 43H.