WSRC-MS-2000-00497

Development and Testing of a Mobile Platform for Tank Remediation

Thomas A. Nance, Robert F. Fogle, Montenius Collins, and Daniel Krementz
Westinghouse Savannah River Company
Aiken, SC 29808

This document was prepared in conjunction with work accomplished under Contract No. DE-AC09-96SR18500 with the U.S. Department of Energy.

DISCLAIMER

This report was prepared as an account of work sponsored by an agency of the United States Government. Neither the United States Government nor any agency thereof, nor any of their employees, makes any warranty, express or implied, or assumes any legal liability or responsibility for the accuracy, completeness, or usefulness of any information, apparatus, product or process disclosed, or represents that its use would not infringe privately owned rights. Reference herein to any specific commercial product, process or service by trade name, trademark, manufacturer, or otherwise does not necessarily constitute or imply its endorsement, recommendation, or favoring by the United States Government or any agency thereof. The views and opinions of authors expressed herein do not necessarily state or reflect those of the United States Government or any agency thereof.

This report has been reproduced directly from the best available copy.

Available for sale to the public, in paper, from: U.S. Department of Commerce, National Technical Information Service, 5285 Port Royal Road, Springfield, VA 22161, phone: (800) 553-6847, fax: (703) 605-6900, email: orders@ntis.fedworld.gov online ordering: http://www.ntis.gov/support/ordering.htm

Available electronically at http://www.osti.gov/bridge/

Available for a processing fee to U.S. Department of Energy and its contractors, in paper, from: U.S. Department of Energy, Office of Scientific and Technical Information, P.O. Box 62, Oak Ridge, TN 37831-0062, phone: (865) 576-8401, fax: (865) 576-5728, email: reports@adonis.osti.gov

Abstract

The Department of Energy (DOE) is committed to removing millions of gallons of high level radioactive waste from waste storage tanks at the Savannah River Site (SRS). SRS was the first site in the DOE complex to have emptied and closed high level waste tanks. Tank closure at the Site is now progressing to tanks containing waste composed of liquid and large deposits of solids, including a tank that has a potential "heel". A heel is a hardened mass of solid waste material spread across the tank bottom. Tank closure requires breaking up this heel and moving the material to the intake of a pumping system for transfer from the tank. In the past, overhead spray systems have been used with some success at moving waste. But the limited number of risers restricts the coverage area of the overhead spray system. Therefore, a floor- level spray system will be used to separate manageable size chunks of the material from the heel. The chunks will be guided into the pump's intake to be remove from the tank.

The floor-level spray system movement will be accomplished by using a mobile platform, a crawler, which provides transport to nearly every point on the tank floor. Transport of the spray system will allow the system to "corral" the waste away from the tank walls and control the movement of the material across the tank floor. Because the available access riser is small, and a wide crawler platform is required to support the spray system, the crawler's frame must fold to enter the tank. After entry into the tank, the crawler unfolds on the tank floor using the crawler drive tracks to expand the frame and position the mobile platform under the entry riser. The spray system will then be lowered separately through the entry riser and mated onto the crawler on the tank floor. The crawler and spray system are tethered and controlled remotely by personnel at the control station. Motorized cable reels will also be remotely controlled to pay out, retrieve, and manage the tethers as the mobile platform moves the spray system across the tank floor. Both the crawler and spray systems are designed to be retrievable.

Development of the tank cleaning system was evaluated using a performance test program. The tests evaluated the spray system dynamics, the crawler's fit through the riser, the crawler landing in mocked up tank with simulant, the crawler's traction, and the crawler and spray system mating. Initial testing verified the crawler platform was compatible with the dynamics produced

by the spray system. The riser fit test confirmed that a dedicated riser is required for deployment of the crawler and the spray system. The crawler traction test defined the capabilities of the crawler at different levels of simulant. Deployment testing through a mockup riser verified the basic system processes. Finally, testing of the complete system in a full-scale mockup with sludge simulant was performed to evaluate the tank cleaning ability of the crawler .

This paper describes the tank conditions, the tank closure process, the development of the crawler and spray system, and the testing program and results used to evaluate the mobile platform and spray system.

Background

The next tank scheduled for decommissioning at SRS is Tank 19F. Based upon decommissioning guidelines, the goal is to leave no more than 1000 gallons of material in the tank upon closure. A hardened mass of solid waste material, known as a heel, is lying at the bottom of Tank 19F in an hourglass shaped mound located in the center of the tank. The heel composition consists of more than a 1000 gallons of material and thus necessitates reparation. Agitators/mixers may have little effect upon this mass. A spray system comprised of a high pressure, adjustable water nozzle was used in previous tank closure processes and this nozzle may be able to break up the tank heel if operated at close range. Once the heel is broken up, the mixers and pumps will be effective in removing the material from the tank. In planning for tank heel mitigation, the High Level Waste (HLW) Division requested assistance from the Savannah River Technology Center's (SRTC) Engineered Equipment and Systems Department (EES). The request called for EES to design, fabricate, assemble, and test a remote-controlled crawler that could carry a high pressure, spray system in Tank 19F. The spray system consisted of an Akron Brass Gemini Electric Water Monitor that has pan and tilt nozzle control capabilities. The nozzle for the water monitor is the Akromatics 5119 rated at 100-gallons per minute (gpm) at 100-pounds per square inch (psi).

Tank 19F is 85' in diameter and 35' high. The contents of Tank 19F consist primarily of a high pH (10-13) combination of salt solution supernate and sludge. The temperature in the tank was measured to be approximately 100° F. The major radioactive elements in the tank include cesium 137 and strontium 90.

Access to the interior of the tank is achieved through fixed structures, referred to as risers, located in a number of tank top positions. These cylindrical openings are typically less than 2' in diameter and approximately 6' long. Tank closure equipment including mixers and pumps are installed in many of the available riser locations. Other risers contain mounted instrumentation to monitor tank conditions. This equipment and instrumentation take up riser space and introduce a number of obstructions in the tank interior and on the tank floor. Miscellaneous obstacles such as lifting plates, reel tapes, and other debris might also be scattered across the tank floor.

The design criteria for the tank crawler are as follows:

1. Carry a payload of approximately 100 lbs.
2. Be compatible with tank chemistry and radiation levels.
3. Fit through a nominal 23" diameter riser.
4. Be of minimal cost.
5. Be able to crawl over ½ inch high lifting plates.
6. Be able to crawl through sludge and supernate.
7. Be waterproof.
8. Have a 3-month design life in the waste tank interior.
9. Be able to remotely couple with the water monitor from within the tank.

Criteria 1 - 4 represented the most challenging design issues. EES engineers identified a low-cost, low profile, off-the-shelf set of crawler tracks manufactured by Inuktun Services Limited. The stainless steel version of the MiniTracs met the design requirements. The tracks are compact as well as strong and utilize a deep-lug tread design. A set of 4 Minitracs can support 100 pounds.

It was necessary to use equipment that could withstand the tank's corrosive chemistry and radiation levels. The vendor was able to replace incompatible stock components with others that were more suitable to Tank 19F conditions. A set of 4 stainless steel crawler tracks with deep-lug belts was purchased and received.

The crawler had to be strong enough to support the size and weight of the water monitor. At the same time, the crawler needed

to be small enough to pass through one of the tank's 23" diameter risers. A crawler was designed with a collapsible frame, illustrated in Figure 1. The water monitor is mounted to an adapter plate that fits onto dowel pins located on top of the crawler. Figure 2 illustrates the steps involved in deploying and retrieving the crawler/water monitor system into and out of the tank. The folded crawler is lowered into the tank through the riser. After the chassis is landed and expanded, the crawler is positioned under the entry riser. The spray system is lowered separately through the same riser and remotely coupled to the crawler. The crawler and spray system are tethered and controlled by personnel at the control station located a safe distance away from the tank. The folding crawler frame or chassis, an adapter plate for the water monitor, and remote control console for the water monitor were designed, fabricated, and assembled in FY98. The folding crawler and water monitor system shown in Figure 6 were demonstrated to HLW personnel in the robotics laboratory in SRTC.

Some concern was expressed about the crawler's ability to drag its own cable and the cable and hose of the water monitor. A commercial sludge tread design using the deep-lug tread belt and steel cleats was tested. It was thought that the steel cleat design would provide better traction in the thick sludge at the bottom of the tank. However, the steel cleats were very sharp and testing revealed that there was a possibility of severing the control cables and water hose. Tests were required using simulant sludge to gauge the crawler's traction capability using the deep-lug track.

Additionally, there was some concern that the force produced by the spraying water monitor could effect the stability of the crawler. These concerns would be exacerbated if the crawler operated on an incline. Stability calculations were performed on the crawler that indicated that the crawler would maintain stability under normal operating conditions.

In FY99, changes were made to the crawler chassis including the addition of a center support, a spring assisted expansion bar, and a safety cable attachment point. Also, the first crawler and water monitor field test, referred to as the "parking lot test", was performed. The purpose of this test was to determine if there were any traction or stability problems caused by operating the water monitor under load as the crawler attempted a number of maneuvers.

In the "parking lot test", the crawler was able to pull both control cables and 100' of 2-½" fire hose. The crawler moved in straight and circular paths. It also traveled over an 18" high mound of compacted dirt. The crawler could not skid-steer in the dirt and was observed to bog down as well. The drive system's fuses open-circuited during this phase of the testing. The stability of the crawler platform was tested by discharging water through the water monitor as it panned in both directions and tilted. The crawler remained stable during water monitor operation.

The "parking lot test" demonstrated the stability of the crawler platform under load. It also established that the motorized crawler tracks lacked sufficient power to perform some required maneuvers. A second set of tracks with more powerful motors was purchased and received.

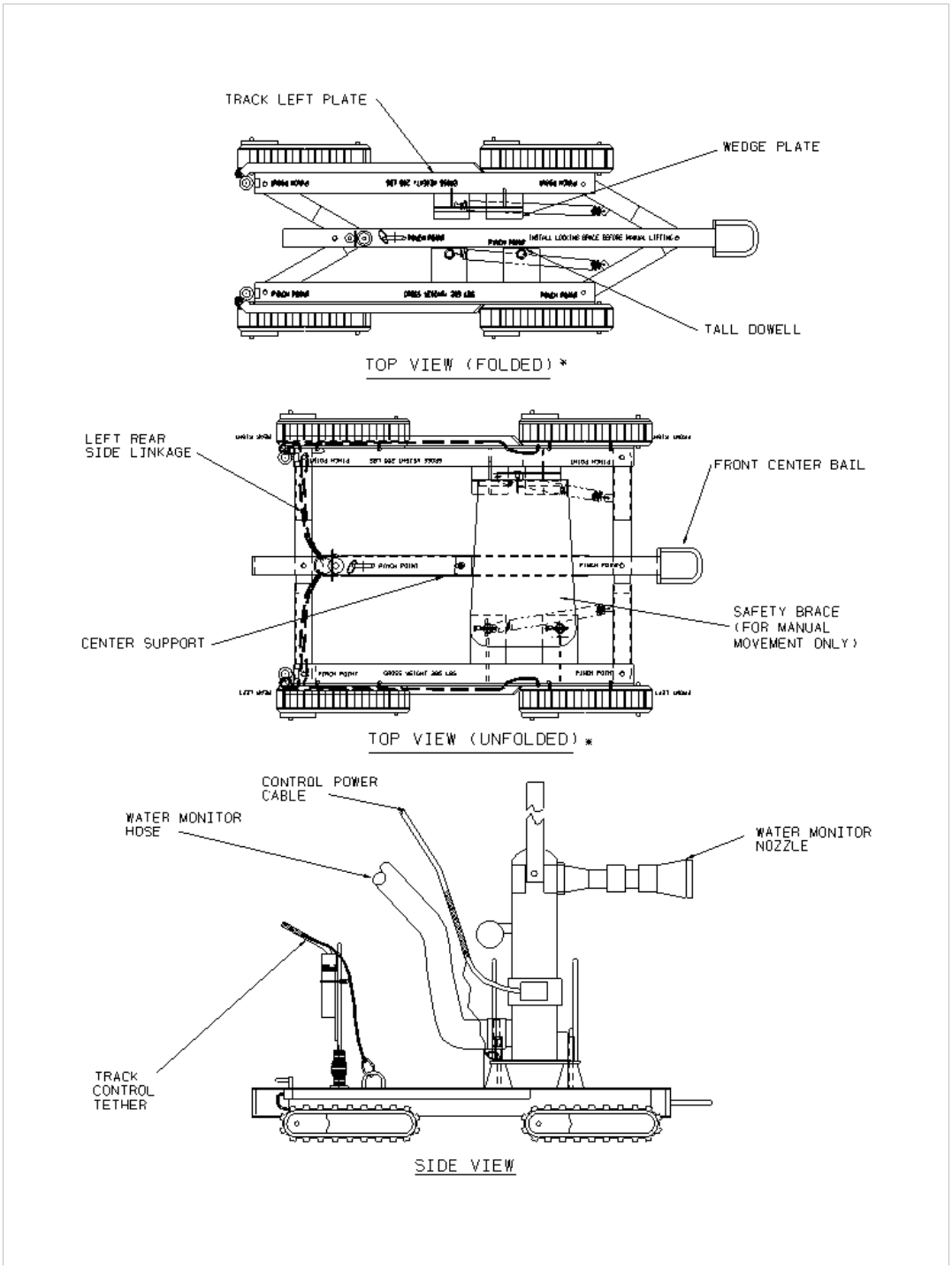

Figure 1. Illustration showing folded/unfolded crawler frame and mounted water monitor

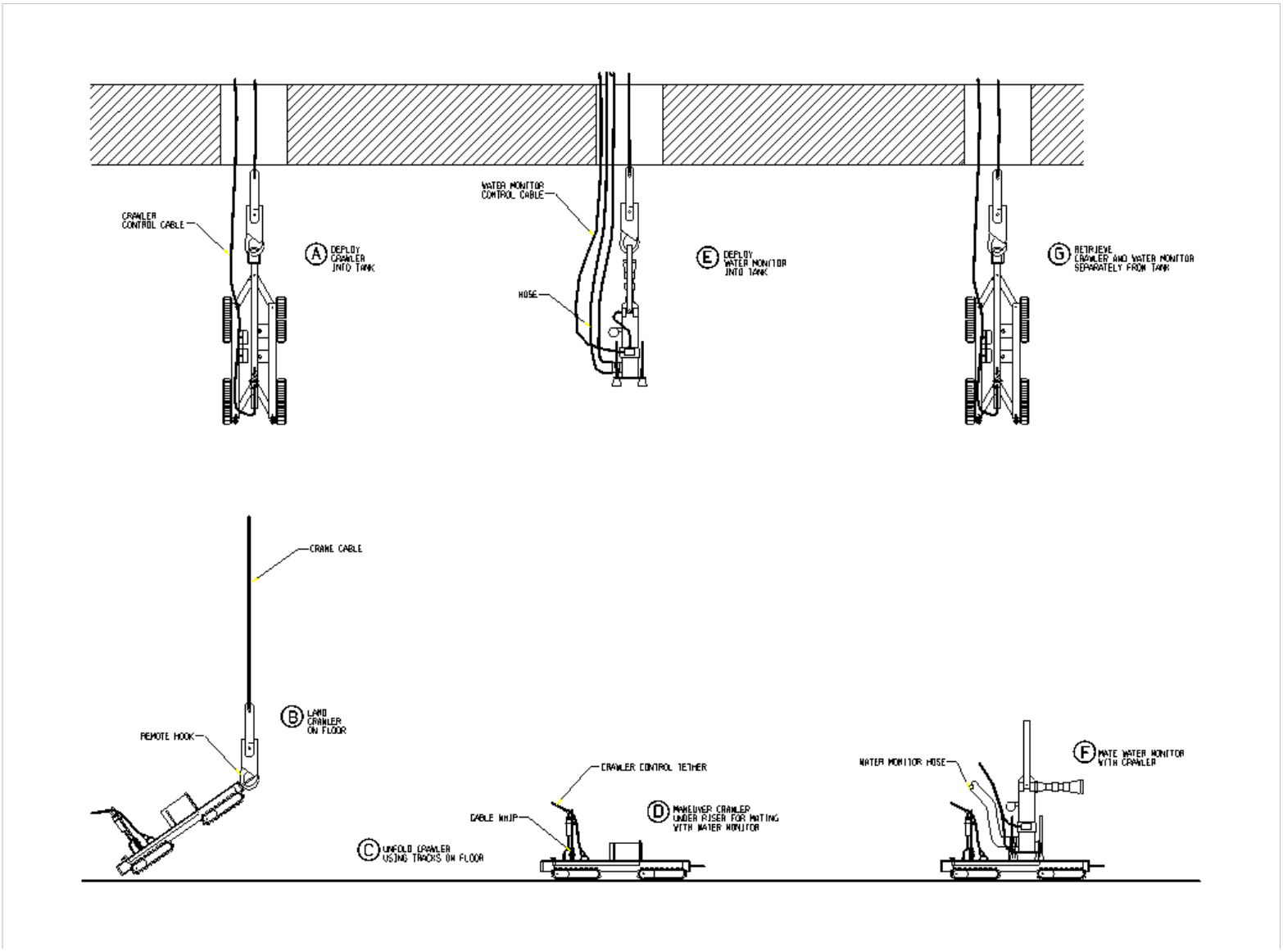

Figure 2. Folding crawler deployment and retrieval steps

In FY00, the crawler and water monitor system was evaluated using four performance tests. Prior to the performance tests, a remote release and engagement hook was obtained for deployment and retrieval of the crawler and water monitor and made significant improvements to the crawler's folding chassis and the water monitor's adapter plate. These changes were made to improve the unfolding of the crawler frame, improve the landing of the crawler, improve mating of the crawler and the water monitor, improve retrieval of the water monitor, and ready the system for deployment. The mechanical and electrical changes to the crawler chassis included:

The changes made to the water monitor's adapter plate included: mounting a lifting bail, adding strain-relief attachment points, and adding guide rails.

One of the mating dowels on the crawler frame was lengthened. This longer dowel allows the operator to engage one of the dowels with the suspended water monitor during coupling and move the crawler underneath to align with the second dowel receptacle. Once the second dowel is aligned, the water monitor can be successfully lowered onto the crawler.

A lifting bail was added to the water monitor to aid in deployment. The bail has a crossbar to allow the disengagement of the remote hook. The water monitor's adapter plate also had guide rails added to ease retrieval through the riser if needed. An attachment point for the water monitor's control cable strain relief was added to the adapter plate.

More powerful tracks were mounted on the crawler frame to improve its skid-steer capability. The paddle tread design was

removed and the deep-lug tread was installed. The track cables were routed through the frame for protection. Conduit was added to the outside of the track mounting plates to complete the cable protection. An attachment point for the crawler control cable strain relief was added to the center support of the chassis. Finally, a safety brace was fabricated to permit safe handling of the crawler when being handled manually. The safety brace immobilized the crawler frame in its expanded configuration eliminating possible pinch points.

A motorized nozzle rated at 250-1250 gpm was purchased. It was felt that a motorized nozzle was needed to provide the ability to remotely change the spray pattern. The motorized nozzle was installed on the water monitor in place of the 100 gpm nozzle.

Performance Test Description

The performance tests were held either in the 723-A Highbay or at the TNX Full Tank Test Facility. The Highbay is a 80’ high tower-like structure with a test platform at 42’ positioned to simulate the riser top to tank floor dimension. A bridge crane is located at the top of the Highbay facility. The TNX Full Tank Test Facility is a carbon-steel tank, 85’ in diameter and 10’ deep, with a capacity of 250,000 gallons. The tank has no top to maximize operational and testing flexibility. A support structure is built adjacent to the tank for testing equipment up to 45’ tall. The tank has been primarily used for development and verification testing of long-shaft centrifugal pumps. It has also been used to test deployment and operation of waste removal devices such as water spray systems and mechanical crawlers. The Full Tank Test Facility was an ideal location to test the Tank19F Folding Crawler System.

The performance tests were conducted in a logical order based on actual deployment process steps. Four tests were performed to acquire information on deployment and operational concerns with the crawler and water monitor. These concerns were:

- Clearance through the riser.
- Crawler traction in simulated sludge.
- Remote coupling and de-coupling of the crawler and water monitor.
- Crawler operation in a full-scale tank with simulant sludge.

The riser clearance or fit test was conducted to verify the crawler and water monitor could fit through a mockup of the preferred riser on Tank 19F. The crawler traction test was performed to gauge crawler traction in simulant tank sludge as well as determine limitations based on sludge depths. A deployment test was completed to assess crawler and water monitor coupling and de-coupling. Finally, a full-scale tank mockup test using sludge simulant was executed to evaluate important operational dynamics such as the deployment of the crawler and water monitor, and the ability to pull the control cables and a hose across the tank floor. In addition, the ability of the system to move material on the tank floor was tested and demonstrated.

Riser Fit Test

The Riser Fit Test was conducted at the TNX Full Tank Test Facility. The objective of the test was to verify that the folding crawler chassis and water monitor fit through a tank riser. There are a limited number of risers on the tank top. HLW initially planned to deploy the crawler through the northeast (NE) riser sharing the riser with a pump mast. The pump support structure partially blocks the riser opening causing limited access. This test would determine if the crawler and water monitor could be inserted through the NE riser. HLW personnel witnessed attempts to insert the crawler and water monitor into a mockup of the Tank 19F NE riser. The crawler passed through the riser with the mockup pump mast, but the water monitor could not. As a result of this test, it was decided that the SE riser would be the dedicated entry point for the crawler system. Unlike the NE riser, the SE riser contains tank instrumentation that can be temporarily removed allowing total riser access for crawler and water monitor insertion. Also, deploying through the SE riser would enable the crawler to efficiently and systematically travel across the tank diameter toward the pumps located beneath the NE riser. The crawler could then engage the mound in the center of the tank and blast it toward the pumps.

Traction Test

The Traction Test was conducted at the TNX Full Tank Test Facility. The objectives of the test were to determine the:

- Effects of sludge buildup on the crawler tracks.
- Maximum sludge operation depth of the crawler.
- Effects on crawler traction due to the slippery nature of sludge.

An 8’ by 16’ by 1’ test bed, see Figure 3, was built in a portion of the TNX Full Tank. Dry kaolin was loaded into the test bed, added water, and mixed to achieve a thick consistency of simulant. A ThermoGravimetric Analysis was conducted on samples of the hydrated kaolin mixture measuring the moisture content between 30-40%.

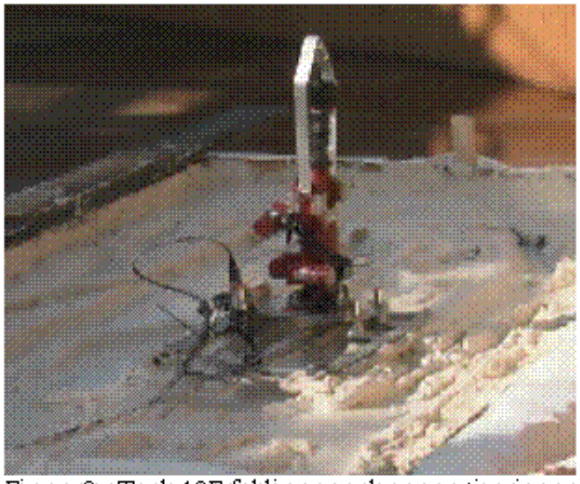

Figure 3. Tank 19F folding crawler operating in simulated sludge in test bed

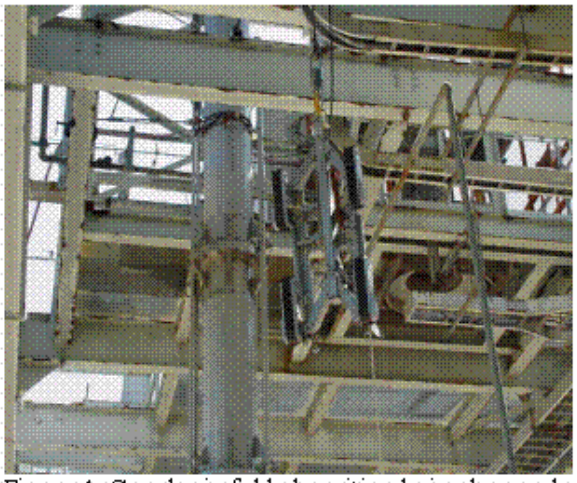

Figure 4. Crawler in folded position being lowered into mockup tank

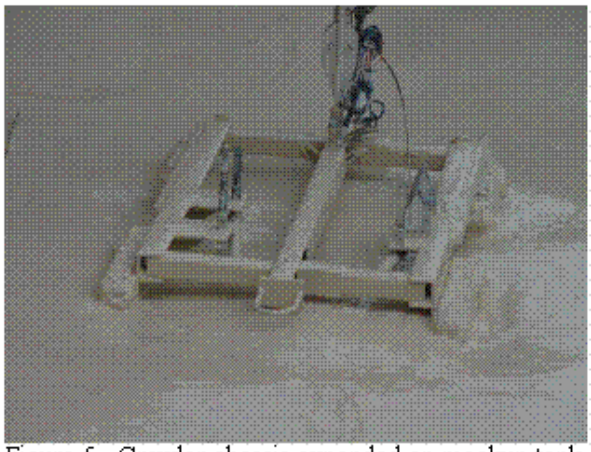

Figure 5. Crawler chassis expanded on mockup tank floor

Figure 6. Water monitor/nozzle lowered through mockup riser

During traction testing, the tread never slipped off the crawler tracks, even when performing tight turns. A large buildup of simulant on the sides of the crawler tracks did not hinder maneuverability. The crawler performed well in simulant depths up to 3 inches. As depths increased to 4-6 inches, crawler operation became difficult. Adding more water to the simulant improved the crawler’s mobility.

Highbay Test

The Highbay Test was conducted in the Highbay of 723-A. The test was a precursor to the TNX Full Tank Simulant Test. The objectives of the test were to:

- Develop coupling and de-coupling proficiency with the crawler and water monitor.
- Test the effectiveness of the remote hook in releasing and latching during the deployment of the crawler and water monitor.
- Determine the camera views needed to accomplish the coupling and de-coupling of the crawler and water monitor.
- Identify any cable management issues.

A riser mockup was fabricated and installed at a 42’ height in the Highbay facility. Multiple video cameras were strategically

located to assist in the test. Testing personnel along with the crawler control and video monitoring equipment were staged on a level above the riser mockup. The remote hook was attached to the bridge crane. The crawler and water monitor were lowered through the riser and down onto the Highbay floor utilizing the video feed from the remote cameras placed at ground level.

The deployment process worked as planned. The crawler and water monitor were successfully passed through the riser. The crawler landed and unfolded as designed using its motorized tracks and attached springs. The remote hook disengaged easily from the crawler and the water monitor; the hook engaged easily as well when the crawler was retrieved. The crawler and water monitor were coupled and de-coupled remotely a number of times. The equipment was retrieved through the riser as well. It is important to note that the deployment process required multiple cameras to successfully align and couple the water monitor's adapter plate to the crawler's chassis.

Full Tank Simulant Test

The Full Tank Simulant Test was conducted at the TNX Full Tank Test Facility. The objective of this test was to determine how the crawler system performs in simulated tank conditions. There were a number of concerns involving the deployment of the crawler system. This test was performed to resolve the following issues:

- Determine the ability of the crawler and water monitor to be mated using a mobile crane.
- Determine the ability of the crawler and water monitor to be retrieved using a mobile crane.
- Determine crawler effectiveness in dragging cables and hoses in the tank.
- Determine the logistics of hose and cable management through the riser.
- Determine crawler effectiveness in negotiating obstacles and debris.
- Determine water monitor effectiveness in dislodging and moving the simulant tank sludge.
- Determine the stability of the crawler while spraying with the water monitor.
- Determine the most effective camera locations necessary to couple and de-couple the crawler and water monitor.

Prior to the test, the tank was filled with water to a depth of approximately 8'. Roughly 200,000 pounds of dry kaolin were added to the tank using an EES designed nozzle. TNX operations personnel operated the Advanced Design Pump Mixer to blend the dry kaolin and water. The kaolin injection process required 2 days; the tank was subsequently allowed to settle for several days and then was drained. Unfortunately, the kaolin-based sludge simulant was extremely hydrated and the depth of the mixture varied from 5" to 12". It would have taken weeks for the sludge to thicken and decrease significantly in depth. The testing went forward despite the simulant depth and consistency problems.

Unforeseen testing difficulties with other tank closure equipment and subsequent scheduling problems caused the Full Tank Simulant Test to be conducted in 2 phases. The first phase of testing covered the first 5 of the aforementioned issues; the remaining issues were covered in the second phase. In both test phases, EES controlled and monitored the crawler and water monitor operation from an instrument shed located beside the full tank mockup.

The first phase of the test occurred in May 2000. As previously demonstrated in the Highbay test, multiple video cameras were needed to assist in the deployment, mating and operation of the crawler and water monitor. Therefore, 2 color video cameras with zoom, pan and tilt capabilities were installed in strategic tank locations, one on the side of the tank and one in the middle. The crane operator, with the assistance of a spotter, lowered the crawler and water monitor through the riser and onto the tank bottom. The spotter used video-display goggles that were integrated with the cameras. The cameras relayed in-tank video to the spotter who provided instructions to the crane operator. The spotter and crawler operator maintained radio contact and relied completely on the video feed to guide the entire coupling operation. Electricians located near the riser on the tank platform performed the cable management duties.

The crawler and associated cabling was lowered through the riser mockup, see Figures 4, and landed on the tank floor. It was driven back and forth beneath the riser to completely expand the frame, as shown in Figure 5. The water monitor, with its cable and hose attached, was then lowered through the riser mockup and into the tank, see Figures 6 and 7. The mating operation, illustrated in Figure 8, was performed a number of times and never took more than 25 minutes. Once coupled together, see Figure 9, the crawler and water monitor performed a number of tasks. The crawler was moved in a snake-like pattern across the tank floor, see Figure 10; the crawler traversed in a path that began at a spot below the mockup SE riser and ended at a location below the mockup NE riser. During testing, engineers verified that the crawler could maneuver with a water-laden hose, spray water while moving (see Figure 11), remotely adjust the spray pattern while spraying using the motorized nozzle, and crawl over obstacles such as banding straps.

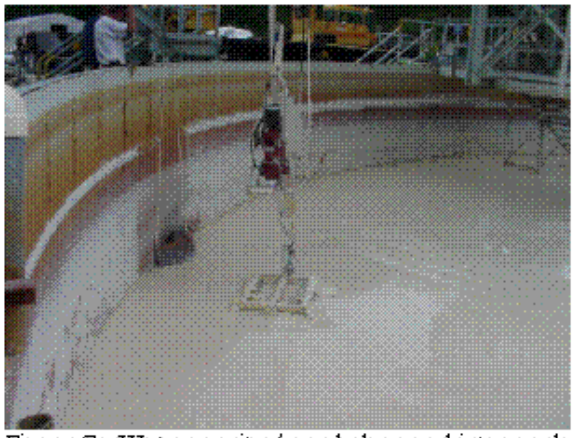

Figure 7. Water monitor/nozzle lowered into mockup tank.

Figure 8. Water monitor/nozzle-coupling operation with crawler chassis.

Figure 9. Crawler and water monitor ready for deployment in mockup tank

Figure 10. Crawler maneuvering and dragging water hose in mockup tank

The second phase of the testing was successfully completed in July 2000. A member of the Providence Group, a robotics subcontracting group associated with the Oak Ridge National Laboratory (ORNL), and several HLW personnel were present at this test. A tank heel was constructed in the mockup tank using kaolin clay and water, see Figure 12. For this test, one camera was repositioned at the riser opening while the other remained in the center of the tank. The crawler and water monitor were lowered through the riser and remotely coupled. The system was then lifted by crane into an area in the tank containing the tank heel. The crawler and spray system easily moved the simulant in the appropriate direction, see Figure 12. Testing also showed that crawler stability was not affected when spraying at an angle or in close proximity to the tank wall, see Figures 13 and 14. Additional testing was performed after the test plan was completed. During this testing, the water monitor's pan motor failed. Subsequent investigation by MTS revealed that extensive corrosion had taken place in the pan motor housing. New pan and tilt motors were purchased and installed.

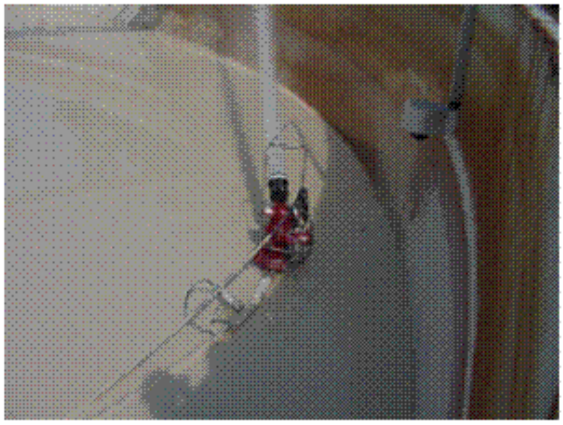

Figure 11. Crawler spraying while traversing mockup tank

Figure 12. Nozzle blasting heel material

Figure 13. Crawler stability tested while spraying on an inclined surface

Figure 14. Crawler stability tested while spraying in close proximity to wall

The remote-controlled, motorized, 250-gpm, spray nozzle generated far more water than the tank's pumps could remove in a timely manner. EES engineers replaced the 250-gpm nozzle with the original 100-gpm, fixed spray pattern nozzle. The repaired water monitor and 100-gpm nozzle were tested with the assistance of the SRS Fire Department. As the water monitor was panned and tilted, the water pressure was varied between 60 and 100 psi. The water stream appeared more than adequate at these pressures.

Performance Test Results

The performance tests provided valuable information. After a thorough evaluation of the test results, the EES design team agrees successful deployment of this crawler system depends on 4 critical issues:

1. Adequate in-tank camera support.
2. Proper cable management.
3. Depth and consistency of the tank sludge.
4. Condition of the landing zone beneath the riser.

In the Full Tank Simulant Test, 2 cameras were used to help mate the crawler and water monitor. The cameras were placed in locations similar to positions that will be available on Tank 19F. Our collective experience in remote-operations shows that the crawler system cannot be deployed without adequate lighting or proper positioning of the cameras. There are two guide pins on the crawler platform and one small wedge plate on the water monitor plate that the operator and spotter must see in order to couple the crawler and water monitor together.

Cable management is also a challenge that must be dealt with carefully. This issue is of special concern in a radioactive environment where personnel contamination must be avoided. Any equipment and associated cabling inserted into the tank will get contaminated. Personnel may have to retrieve the crawler control cable during operation to prevent the crawler from running over it as well as having to make a repair to the crawler. The cables, hose, crawler and water monitor should all be washed prior to retrieval back through the riser after in-tank use. Control of the cable is also needed to prevent the cable from being caught under mixers or other in-tank equipment. EES engineers believe that motorized cable reels will help prevent unnecessary radiation exposure to workers and reduce contamination incidents.

Another important issue is the depth of the supernate and sludge. The depth of these tank constituents affects the water monitor's operation as well as crawler and water monitor coupling. The water monitor's pan motor failure was due to water infiltration. The pan motor should be kept above the supernate. Also, coupling will be difficult if the depth of the supernate is more than 6" (the latching slot for the crawler and water monitor will not be visible) and impossible if the supernate is more than 10" deep (the guide pins will not be visible). As observed in the Traction Test, the crawler has difficulty moving if the sludge is more than 3" deep due to frame interference. The crawler needs to be able to move beneath the riser to fully expand and accept the water monitor. Consistency of the sludge is another factor. During the Traction Test, adding water to simulant sludge greater than 3" deep actually increased the crawler's mobility. So the crawler can navigate in sludge greater than 3" deep if it is soupy as demonstrated in the TNX Full Tank Test.

Finally, the landing zone beneath the riser must be free of obstructions. Also, the tank floor under the deployment riser must be level within 5 degrees of horizontal to successfully couple the crawler and the water monitor.

Conclusions

An inexpensive, off-the-shelf, remotely controlled, drive train was identified as a suitable candidate for the crawler platform. A material analysis of the drive train was performed with regard to tank chemistry and radiation levels. Material substitutions were made. A set of 4 stainless steel drive trains was purchased along with a controller. A folding chassis incorporating the drive trains was designed to insert through a tank riser. The water monitor payload was too large to permanently attach to the chassis and deploy together through the riser access. An adapter plate was fabricated for independent deployment of the water monitor. The adapter plate allowed the water monitor to be remotely coupled with the crawler from within the tank. The process for deploying the system was successful. Tests and demonstrations were conducted that highlighted the ability of the crawler and water monitor system to successfully maneuver in the tank and move simulant sludge where directed. Some improvements were made to the system as a result of the testing. EES engineers found that strategic camera placement, appropriate in-tank lighting, condition of the landing zone and tank floor, depth and characteristics of the tank waste, and cable and hose management are critical factors to the success of the Tank 19F Folding Crawler system.

Acknowledgements

This work was supported by the U. S. Department of Energy under Contract DE-AC09-96SR18500. Special thanks are extended to P. Gibbons, R. Kane, S. Smith, J. Wong, M. Kyle, E. Saldivar, B. Blackmon, T. McCoy, and S. Erickson for their support of this work.