WSRC-MS-98-00039

CONF-980543--

Cross-Flow Filtration of Department of Energy Hanford Waste Streams using Sintered Metal Mott and Graver Filters at the Savannah River Technology Center

by

B. W. Walker

Westinghouse Savannah River Company
Savannah River Site
Aiken, South Carolina 29808

D. J. McCabe

A document prepared for AMERICAN FILTRATION AND SEPARATIONS SOCIETY ELEVENTH ANNUAL TECHNICAL CONFERENCE at St. Louis, MI, USA from 5/5/98 - 5/7/98.

DOE Contract No. **DE-AC09-96SR18500**

This paper was prepared in connection with work done under the above contract number with the U. S. Department of Energy. By acceptance of this paper, the publisher and/or recipient acknowledges the U. S. Government's right to retain a nonexclusive, royalty-free license in and to any copyright covering this paper, along with the right to reproduce and to authorize others to reproduce all or part of the copyrighted paper.

MASTER

DISTRIBUTION OF THIS DOCUMENT IS UNLIMITED

DISCLAIMER

This report was prepared as an account of work sponsored by an agency of the United States Government. Neither the United States Government nor any agency thereof, nor any of their employees, makes any warranty, express or implied, or assumes any legal liability or responsibility for the accuracy, completeness, or usefulness of any information, apparatus, product, or process disclosed, or represents that its use would not infringe privately owned rights. Reference herein to any specific commercial product, process, or service by trade name, trademark, manufacturer, or otherwise does not necessarily constitute or imply its endorsement, recommendation, or favoring by the United States Government or any agency thereof. The views and opinions of authors expressed herein do not necessarily state or reflect those of the United States Government or any agency thereof.

This report has been reproduced directly from the best available copy.

Available to DOE and DOE contractors from the Office of Scientific and Technical Information, P. O. Box 62, Oak Ridge, TN 37831; prices available from (423) 576-8401.

Available to the public from the National Technical Information Service, U. S. Department of Commerce, 5285 Port Royal Road, Springfield, VA 22161.

DISCLAIMER

Portions of this document may be illegible electronic image products. Images are produced from the best available original document.

Cross-flow Filtration of Department of Energy Hanford Waste Streams using Sintered Metal Mott and Graver filters at the Savannah River Technology Center

B.W. Walker

Savannah River Technology Center
Waste Processing Technology Section
Westinghouse Savannah River Corporation
Highway 125
Aiken, South Carolina 29808

Abstract

Treatment processes have been proposed that will utilize cross-flow filtration to filter supernate and concentrated sludge waste streams at a Department of Energy plant in Hanford, Washington. Two waste processing applications have been identified as candidates for this technology.[1] The first of the Hanford applications involves filtration of the decanted supernate from sludge leaching and washing operations. This process requires the concentration and removal of dilute fines from the bulk of the supernate (0.05 wt %). The second application involves filtration to wash and concentrate the sludge during out-of-tank processing of a relatively concentrated (8 wt %) solids feed stream.

Filter studies were conducted with a 0.5 micron cross-flow sintered metal Mott filter and 0.1 micron cross-flow Graver filter using two simulants to demonstrate solid-liquid separation of the waste streams.

Introduction

Simulants were developed at Pacific Northwest National Laboratory (PNNL)[2] for testing of cross-flow filtration processes. The composition of the simulants are shown in Table 1. The simulants represent Hanford waste and were developed to accurately reflect the physical properties, in particular the particle size, of the Hanford waste. The simulant that contained 0.05 wt % insoluble solids represents supernate from the settled sludge while the 8.0 wt % simulant represents unwashed retrieved sludge.

Table 1 - Composition of Slurries (basis 26 liters)

Component	S-3, 8.0 wt % (mass, g)	S-3, 0.05 wt %(mass, g)
Boehmite - $Al_2O_3.(x)H_2O$	2358	11.7
Gibbsite - $Al_2O_3.3H_2O$	262.5	1.3
NaOH	120	104

Cross-Flow Filter Operating Conditions

Cross-flow filtration experiments were performed with each of these simulants using the Parallel Rheology Experimental Filter (PREF) shown in Sketch 1.

Sketch 1.

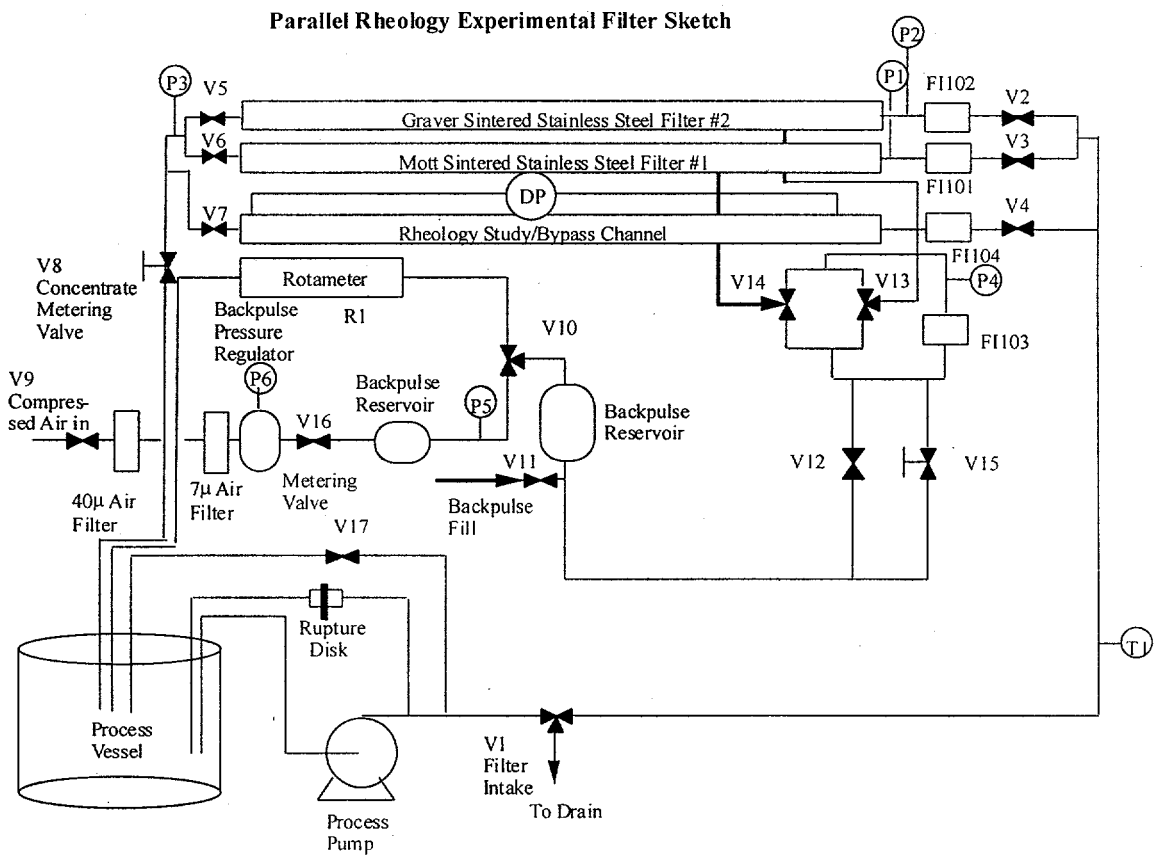

Each test involved measuring the filtrate flux under a variety of conditions. The two independent variables for these tests were filter transmembrane pressure drop and axial velocity. Transmembrane pressure drop is defined as the sum of slurry pressure entering and exiting the filter divided by 2 minus the pressure of the filtrate as it leaves the filter.

Axial velocity is defined as the speed that the slurry is moving inside the filter. A backpulse of the filter with filtrate pressurized with 85 psig air was performed following each change in the test parameters. Measurements were taken at each test condition for a period of 1 hour.

Equipment Description

The Mott and Graver cross-flow filters are seamless tubes fabricated by the manufacturers by sintering 316 stainless steel particles. The Mott filter, manufactured by Mott Metallurgical Corporation of Farmington, Conn. has a 0.5 inch inner diameter, is 4 feet long, and has 0.5 micron pores. The Graver filter, manufactured by Graver Separations, of Glasgow, Delaware has a .625 inch inner diameter, is 2.5 feet long, has 0.1 micron pores, and has a layer of titania. A Moyno progressive cavity positive displacement pump manufactured by Moyno Industrial Products of Springfield, Ohio provided slurry flow.

Filtration Mechanism

In cross-flow filtration the fluid to be filtered flows in parallel to the membrane surface and generates shearing forces and/or turbulence across the filter medium which influences formation of a filter cake or particle deposition in filter pores.

Cross-flow filtration can be separated into two areas of operation.[3] In the first area of operation, the axial velocity is sufficient to remove any solids from the surface of the filter. Thus, there is not an accumulation of filter cake on the surface of the filter and any decrease in filter performance is attributed to the deposition of solids within the filter pores. This area of operation is usually associated with dilute feed streams, high axial velocities and low pressure drops. Under these conditions, increasing the axial velocity of the feed stream concentration will have little impact on filtrate production rates. However, increases in transmembrane pressure drop will produce significant increases in filtrate flow rates.

In the second area of operation, normally when more concentrated feed streams are employed (greater than 5 wt % solids), a higher axial velocity is needed to keep the surface of the filter free of deposited solids. If the axial velocity is not sufficient, a cake of solids will deposit on the surface of the filter. Under these conditions, an increase in the axial velocity will increase the rate of transport of solids from the surface of the filter, and thus decrease the thickness of the filter cake, producing an increase in filter performance. The surface filter cake will cause a decrease in filter performance when an excessive thickness of filter cake is deposited. If filtrate flux varies significantly with velocity this indicates filter cake formation on the filter surface and no deposition of solids into the pores.

Conclusions

Figures 1 - 2 show that the Graver cross-flow filter gives a somewhat higher filtrate flux than the Mott filter for the 0.05 wt % slurry. Figures 3 - 4 show that the Mott cross-flow filter gives higher filtrate flux than the Graver filter for the 8 wt % slurry. Spikes in filtrate flux are caused when the filter is backpulsed with filtrate pressurized by 85 psig air.

The filtrate flux was not statistically significant with respect to axial velocity for either the Mott type of filter or the Graver type of filter for the 0.05 wt % slurry indicating a filter cake is not formed on the surface of the filter for these cases and that the axial velocity is sufficient to keep the surface free of filter cake. A filter cake being formed on the filter surface is indicated for the Mott filter with 8 wt % slurry because statistically significant changes in filtrate flux were observed when the axial velocity was varied. The statistical model predicted from linear regression of data for the filtrate flux and slurry velocity was

Filtrate flux = 0.00194x(Slurry velocity) + 0.00461

The 95 % confidence interval for the velocity coefficient is $0.00359 < c1 < 0.00029$.

Figure 1. Mott Filtrate Flux vs Time for 0.05 wt %

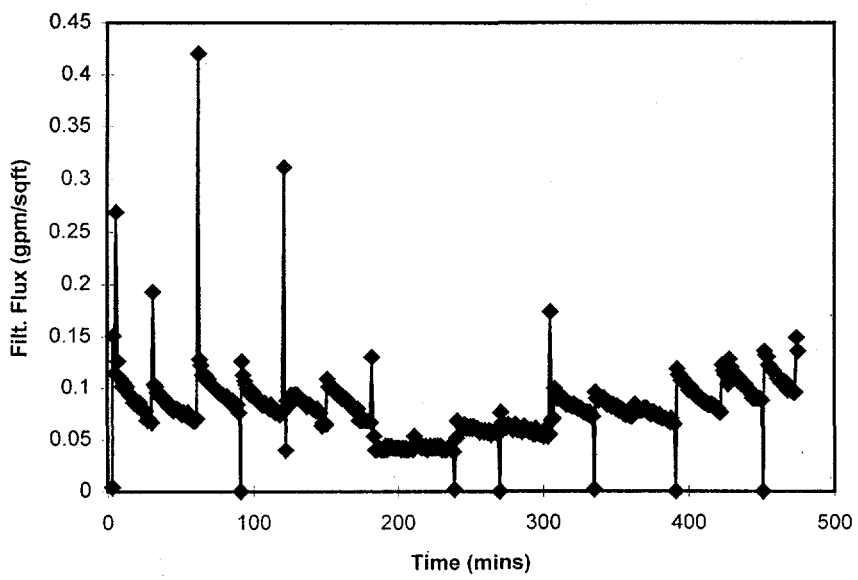

Figure 2. Graver Filtrate Flux vs Time for 0.05 wt % Slurry

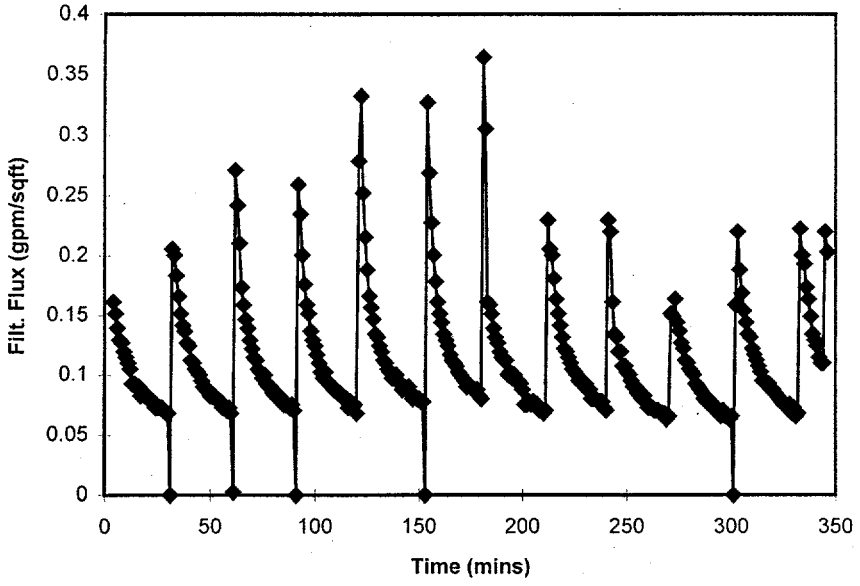

Figure 3. Mott Filtrate Flux vs Time for 8 wt % Slurry

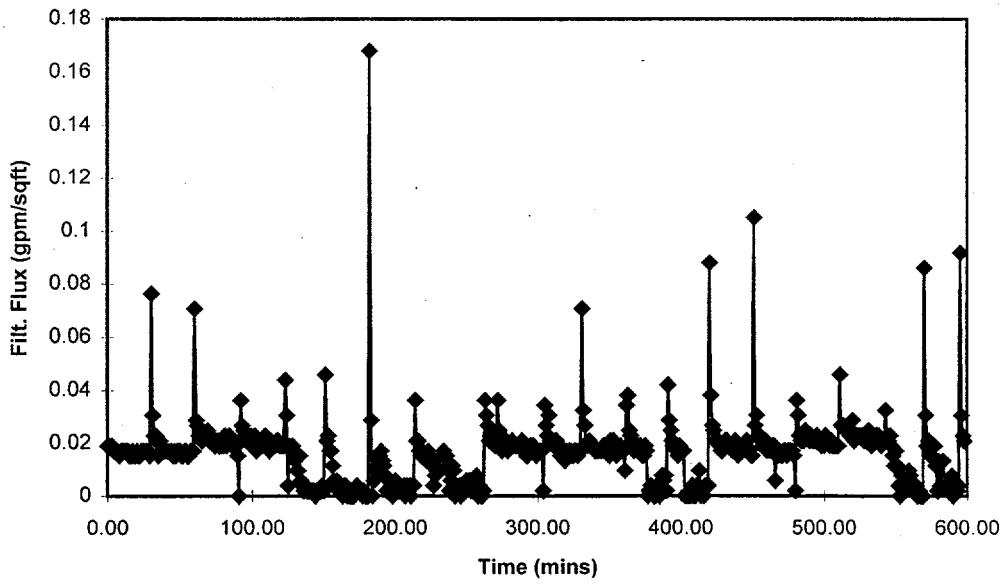

Figure 4. Graver Filtrate Flux vs Time for 8 wt % Slurry

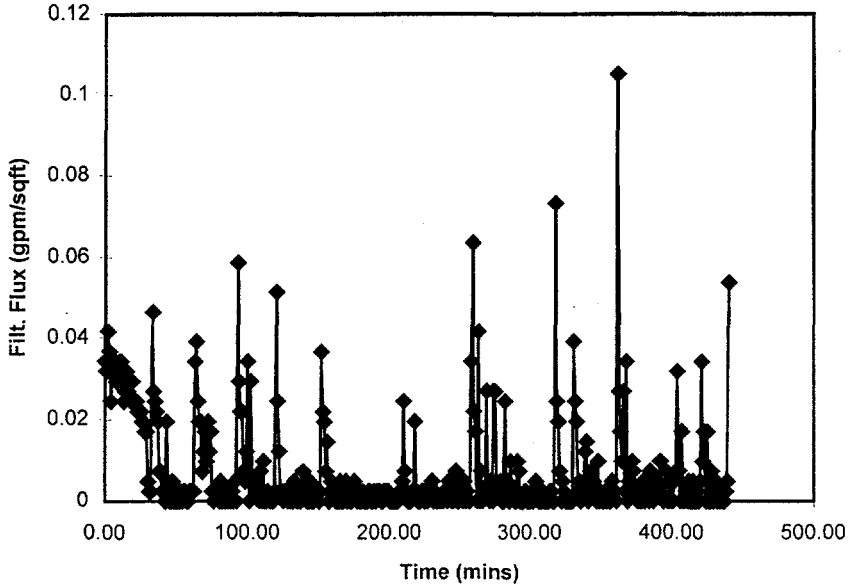

The filtrate flux was statistically significant with respect to filter transmembrane differential pressure for the Mott and Graver filter when filtering 0.05 wt % slurry. The filtrate flux being statistically significant with respect to filter differential pressure indicates deposition of solids in the pores of the filter but not on the filter surface and that back-transport of slurry particles is not the dominating filtration mechanism.

The Statistical Model for the Mott 0.05 wt % slurry was determined as
Filtrate flux = 0.001625x(Differential pressure) + 0.0312
The 95 % confidence interval for the filter transmembrane differential pressure coefficient is $0.00205 < c1 < 0.0012$.

The Statistical Model for the Graver 0.05 wt % slurry was determined as
Filtrate flux = 0.000809 x(Differential pressure) + 0.0637
The 95 % confidence interval for the filter transmembrane differential pressure coefficient is $0.00114 < c1 < 0.00476$.

The filtrate flux was also affected significantly by the transmembrane differential pressure during the Mott filtration of the 8 wt % slurry. The Statistical Model for the Mott 8 wt % slurry was determined as
Filtrate flux = 0.00034x(Differential pressure) + 0.00897
The 95 % confidence interval for the filter transmembrane differential pressure coefficient is $0.000633 < c1 < 4.67e^{-5}$.

Filter fouling indicated by a statistical significance of filtrate flux with increasing time does not seem to occur for either of the filters for the 0.05 wt % or the 8 wt % slurry. Filter fouling was also not observed when the 8 wt % slurry was concentrated as shown in Figure 5. Since low filtrate flow rates were sometimes obtained during the 8 wt % Graver filtration, the Mott filter was used to determine the maximum concentration (14.5wt %) that could be obtained with the 8 wt % slurry.

Figure 5. Mott Filtrate Flux vs Time for Concentration of 8 wt %

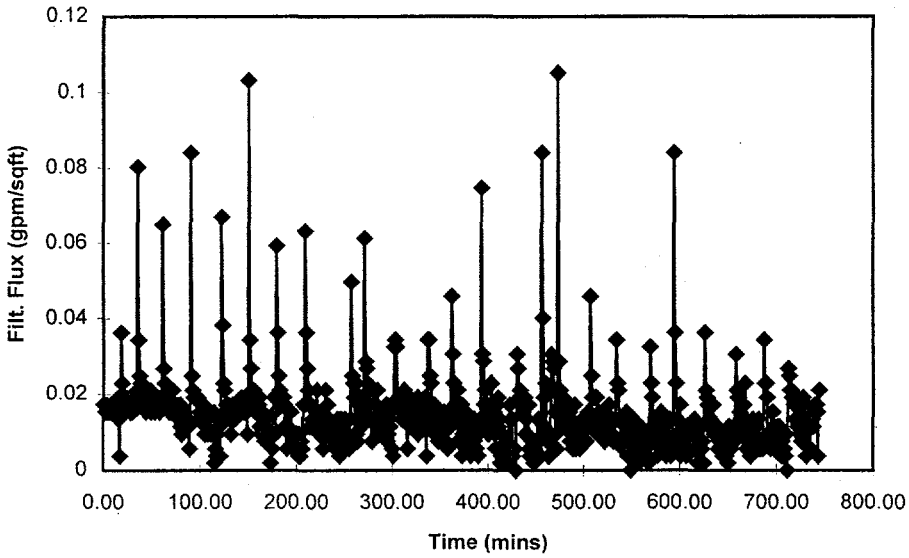

Analyses of filtrate samples taken during all types of slurries and filters gave acceptable clear filtrate verified by turbidity analyses. Filter cleaning of the Mott and Graver cross-flow filters after filtration to at least 80 % of the manufacturer's clean water flux specification was achieved using 2 wt % sodium hydroxide solution and 2 wt % oxalic acid solution.

Comparison of these results with those obtained by PNNL researchers using actual waste[4] indicate that this simulant behaves most like waste in their tank C-107. The Graver filter flow rates for 0.05 wt % simulant (approximately 0.15 gpm/f^2) were higher than those observed for 0.05 wt % C-107 sludge (approximately 0.1 gpm/ f^2), although the ionic strength was lower in the C-107 samples. At high solids concentration (8 wt %) the simulant exhibited lower flow rates (approximately 0.01 gpm/f^2) than the C-107 sludge (approximately 0.02 gpm/f^2). At low concentration this simulant exhibited higher fluxes than all of the actual wastes tested. At high concentrations, this simulant exhibited lower fluxes than actual wastes. The differences are likely attributed to the low ionic strength used in the actual waste tests with low solids concentration.

References

1. D.J. McCabe, June 17, 1995, "Evaluation and Ranking of the Tank Focus Area Solid Liquid Separation Needs (U)", WSRC-TR-95-0337, Savannah River Technology Center.

2. R.A. Peterson, D.J. McCabe, "Hanford and Oak Ridge Underground Storage Tank Waste Filtration Process Evaluation", WSRC-TR-96-0232, Savannah River Technology Center.

3. R.A. Peterson, C.A. Nash, October 1995, "Filter Performance Mechanisms", WSRC-TR-95-0420, Savannah River Technology Center.

4. J.G.H. Geeting and B.A. Reynolds, September, 1997, "Bench-Scale Cross-flow Filtration of Hanford Tank C-106, C-107, B-110, and U-110 Sludge Slurries", PNNL-11652, UC-721, Pacific Northwest National Laboratories.