*** RMIS View/Print Document Cover Sheet ***

This document was retrieved from the Documentation and Records Management (DRM) ISEARCH System. It is intended for Information only and may not be the most recent or updated version. Contact a Document Service Center (see Hanford Info for locations) if you need additional retrieval information.

Accession #: D196041963

Document #: SD-WM-TI-694

Title/Desc:
TWRS OPTIMIZED PROCESSING STRATEGY

Pages: 371

MAR 05 1996 (20) Sta. 21

ENGINEERING DATA TRANSMITTAL

Page 1 of 1

1. EDT 608994

2. To: (Receiving Organization) Disposal Program	3. From: (Originating Organization) Process Design	4. Related EDT No.: NA
5. Proj./Prog./Dept./Div.: TWRS	6. Cog. Engr.: E. J. Slaathaug 74A20 H5-49 376-5350	7. Purchase Order No.: NA
8. Originator Remarks: For approval and release.		9. Equip./Component No.: NA
		10. System/Bldg./Facility: NA
11. Receiver Remarks:		12. Major Assm. Dwg. No.: NA
		13. Permit/Permit Application No.: NA
		14. Required Response Date: 2/15/96

15. DATA TRANSMITTED

(A) Item No.	(B) Document/Drawing No.	(C) Sheet No.	(D) Rev. No.	(E) Title or Description of Data Transmitted	(F) Approval Designator	(G) Reason for Transmittal	(H) Originator Disposition	(I) Receiver Disposition
1	WHC-SD-WM-TI-694	-	0	Tank Waste Remediation System Optimized Processing Strategy	NA	1,2	1	

16. KEY

Approval Designator (F)	Reason for Transmittal (G)	Disposition (H) & (I)
E, S, Q, D or N/A (see WHC-CM-3-5, Sec.12.7)	1. Approval 2. Release 3. Information 4. Review 5. Post-Review 6. Dist. (Receipt Acknow. Required)	1. Approved 2. Approved w/comment 3. Disapproved w/comment 4. Reviewed no/comment 5. Reviewed w/comment 6. Receipt acknowledged

17. SIGNATURE/DISTRIBUTION (See Approval Designator for required signatures)

(G) Reason	(H) Disp.	(J) Name	(K) Signature	(L) Date	(M) MSIN	(J) Name	(K) Signature	(L) Date	(M) MSIN	(G) Reason	(H) Disp.
1	1	Cog.Eng. E. J. Slaathaug	[signature]	2/14/96	H5-49						
1	1	Cog. Mgr. J. S. Garfield	[signature]	2/14/96	H5-49						
		QA									
		Safety									
		Env.									

18.	19.	20.	21. DOE APPROVAL (if required)
E. J. Slaathaug [signature] 2-14-96 Signature of EDT Originator Date	E. J. Kasjancič [signature] 3/1/96 Authorized Representative for Receiving Organization Date	J. S. Garfield [signature] 2/14/96 Cognizant Manager Date	Ctrl. No. [] Approved [] Approved w/comments [] Disapproved w/comments

Tank Waste Remediation System Optimized Processing Strategy

E. J. Slaathaug, A. L. Boldt, K. D. Boomer, J. D. Galbraith,
C. E. Leach, and T. L. Waldo
Westinghouse Hanford Company, Richland, WA 99352
U.S. Department of Energy Contract DE-AC06-87RL10930

EDT/ECN: 608994 UC: 721
Org Code: 74A20 Charge Code: D5228
B&R Code: EW3130010 Total Pages: 419

Key Words: TWRS, high-level waste

Abstract: This report provides an alternative strategy evolved from the current Hanford Site Tank Waste Remediation System (TWRS) programmatic baseline for accomplishing the treatment and disposal of the Hanford Site tank wastes. This optimized processing strategy performs the major elements of the TWRS Program, but modifies the deployment of selected treatment technologies to reduce the program cost. The present program for development of waste retrieval, pretreatment, and vitrification technologies continues, but the optimized processing strategy reuses a single facility to accomplish the separations/low-activity waste (LAW) vitrification and the high-level waste (HLW) vitrification processes sequentially, thereby eliminating the need for a separate HLW vitrification facility.

TRADEMARK DISCLAIMER. Reference herein to any specific commercial product, process, or service by trade name, trademark, manufacturer, or otherwise, does not necessarily constitute or imply its endorsement, recommendation, or favoring by the United States Government or any agency thereof or its contractors or subcontractors.

Printed in the United States of America. To obtain copies of this document, contact: WHC/BCS Document Control Services, P.O. Box 1970, Mailstop H6-08, Richland WA 99352, Phone (509) 372-2420; Fax (509) 376-4989.

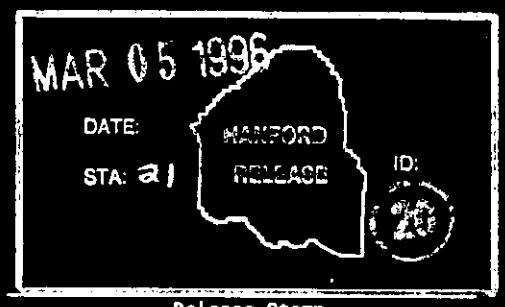

V.L. Burkland 3/4/96
Release Approval Date

Release Stamp

Approved for Public Release

WHC-SD-WM-TI-694
Revision 0

TANK WASTE REMEDIATION SYSTEM OPTIMIZED PROCESSING STRATEGY

February 1996

E. J. Slaathaug
A. L. Boldt
K. D. Boomer
J. D. Galbraith
C. E. Leach
T. L. Waldo

Prepared by
Westinghouse Hanford Company
Richland, Washington

This page intentionally left blank.

EXECUTIVE SUMMARY

This report provides an alternative strategy evolved from the current Hanford Site Tank Waste Remediation System (TWRS) programmatic baseline for accomplishing the treatment and disposal of the Hanford Site tank wastes. This optimized processing strategy performs the major elements of the TWRS Program, but modifies the deployment of selected treatment technologies to reduce the program cost. The present program for development of waste retrieval, pretreatment, and vitrification technologies continues, but the optimized processing strategy reuses a single facility to accomplish the separations/low-activity waste (LAW) vitrification and the high-level waste (HLW) vitrification processes sequentially, thereby eliminating the need for a separate HLW vitrification facility. This facility is called the Sequential Processing Facility (SPF). Reuse of the processing facility for multiple functions reduces capital and expense costs, minimizes the land committed for radioactive waste management, and reduces the decontamination and decommissioning task.

To do this, all waste treatment functions and associated technologies currently identified in the programmatic baseline are incorporated into a single process facility. This strategy will require the modification of the interim system constraints, but will maintain the same system end states. These end states contained in the current programmatic baseline are consistent with the *Hanford Federal Facility Agreement and Consent Order*[1] (Tri-Party Agreement) completion date of 2028 for tank clean-up. The system end states are (1) closed

[1]Ecology, EPA, and DOE, 1994, *Hanford Federal Facility Agreement and Consent Order*, as amended, Washington State Department of Ecology, U.S. Environmental Protection Agency, and U.S. Department of Energy, Olympia, Washington.

single-shell (SST) and double-shell tank (DST) farm operable units, (2) vitrified LAW disposed at the Hanford Site, and (3) vitrified HLW transported to a federal repository for disposal.

SYSTEM DESCRIPTION FOR LOW COST STRATEGY

The SPF initially separates tank wastes into LAW and HLW fractions using enhanced sludge washing and cesium ion exchange. The separated HLW fraction is stored in existing DSTs and the LAW fraction is vitrified. After vitrification of the LAW fraction, the unnecessary equipment is removed when it is in the way, and new equipment is installed as required by the HLW vitrification process.

COST AND SCHEDULE COMPARISON

The total life-cycle cost estimate for the TWRS Program was previously estimaed in the Multi-Year Work Plan, which is updated annually (WHC 1995). Adoption of the optimized processing strategy results in the reduction of total life-cycle cost to $15.6 billion in 1995 dollars. Table ES-1 identifies the primary components of the total estimated costs provided.

Table ES-1. Life-Cycle Cost Summary.

Cost element	Cost ($ billions)
	Range
Program management	1.0
Operations and maintenance	1.8 - 2.9
Tank safety	0.2
Characterization	0.6
Subtotal	3.6 - 4.7
Disposal Program	
Retrieval	4.4 - 5.0
Facility (total project cost)	2.0 - 2.6
Facility operating cost	3.8
High-level waste disposal	1.8[a]
Subtotal	12.0 - 13.2
Total	15.6 - 17.9

[a]Based on single repository

Incorporation of the optimized processing strategy into the TWRS Program baseline requires modification of interim milestones established in the Tri-Party Agreement, but complies with the 2028 date to complete processing. These interim milestones include the start of separations in 2004 (M-50-02), hot start of the HLW treatment process in 2008 (M-50-04), conclusion of SST retrieval in 2018 (M-45-05), SST retrieval schedule (M-45-05-T01 - T15), and complete closure of all SSTs in 2024 (M-45-06). With the Sequential Processing Facility, the HLW vitrification process is scheduled to start operations in 2023, but completion of tank waste pretreatment and LAW/HLW vitrification would still be accomplished before December 2028 (M-60-00).

As compared to the present TWRS Program baseline, the optimized processing strategy reduces the near term tank waste characterization and technology development needs. The characterization and technology development tasks for retrieval, pretreatment, and vitrification of tank waste sludges are not conducted in parallel with that of the tank waste salt cake and supernatant. Instead, a sequential approach is undertaken for tank waste sludge characterization and HLW technology development. Similarly, design and construction activities for tank waste retrieval, pretreatment, and vitrification are conducted sequentially in this new strategy as opposed to being in parallel, thereby reducing the near term cost impact.

CONTENTS

1.0 INTRODUCTION 1
1.1 PURPOSE 1
1.2 CURRENT BASELINE ASSUMPTIONS 1
1.3 ALTERNATE STRATEGY ASSUMPTIONS 2
1.4 REPORT ORGANIZATION 3

2.0 SUMMARY OF FINDINGS 5
2.1 SUMMARY OF SINGLE PROCESS FACILITY TREATMENT STRATEGY 5
2.2 FACILITY DESIGN 6
2.3 COST IMPACTS 6
2.3.1 Comparison to Multi-Year Program Plan 6
2.3.2 Sequential Processing Facility Cost Elements 10
2.4 SCHEDULE IMPACTS 13
2.5 DEMONSTRATION PHASE BENEFITS AND IMPACTS 15
2.5.1 Processing Experience 15
2.5.2 Schedule Impacts 16
2.5.3 Cost Impacts 16

3.0 DESCRIPTION AND EVALUATION OF THE TANK WASTE REMEDIATION SYSTEM 17
3.1 BASELINE OPERATIONAL SCENARIO 17
3.2 MAINTENANCE AND OPERATIONS OF TANK FARMS 17
3.2.1 Characterize Waste 18
3.2.2 Transfer Stored Waste 18
3.2.3 Concentrate Waste 19
3.2.4 Tank Farm Restoration and Safe Operations Upgrades 20
3.3 DISPOSAL OPERATIONS 20
3.3.1 Retrieve Tank Waste 21
3.3.2 Separations 24
3.3.3 Low-Activity Waste Vitrification and Disposal 25
3.3.4 Immobilize High-Level/Transuranic Waste 26

4.0 DESCRIPTION AND EVALUATION OF SEQUENTIAL PROCESSING FACILITY 29
4.1 PROCESS DESCRIPTION 29
4.1.1 In-Process Waste Storage System 29
4.1.2 Separations and Low-Activity Waste Processing System 33
4.1.3 High-Level Waste Processing 36
4.2 PROCESS FACILITY DESCRIPTION 38
4.3 SUPPORT FACILITY DESCRIPTION 38
4.4 SITE LOCATION 42

5.0 COST ESTIMATES 43
5.1 TANK WASTE REMEDIATION SYSTEM LIFE-CYCLE COST 43
5.2 LIFE-CYCLE COST METHODOLOGY 45
5.3 INITIAL CAPITAL COST 45
5.3.1 Total Estimated Cost 46
5.3.2 Other Project Costs 47
5.4 MELTER LINE CONVERSION COST 48
5.5 OPERATING COSTS 48
5.5.1 Staff Cost 49
5.5.2 Consumable Costs 51
5.5.3 Decontamination and Decommissioning Costs 52
5.6 HIGH-LEVEL WASTE DISPOSAL COSTS 52
5.7 OTHER TANK WASTE REMEDIATION SYSTEM PROGRAM COSTS . . 53
5.8 DEMONSTRATION PHASE COSTS 54

6.0 REFERENCES 55

APPENDIXES

A - PROCESS DESCRIPTION A-1

B - PROCESS FACILITIES, SITE LAYOUT, AND SUPPORT FACILITIES . B-1

C - EQUIPMENT LIST C-1

D - INITIAL CAPITAL COST ESTIMATE D-1

E - MELTER CONVERSION ESTIMATES E-1

F - ALTERNATIVE FUNDING PROFILES F-1

LIST OF FIGURES

2-1. Isometric View of the Sequential Processing Facility. 7

2-2. Alternative Funding Profile 8

2-3. Comparison of the Tri-Party Agreement and Optimized Processing Strategy Schedules. 14

3-1. Tank Waste Retrieval Sequence. 22

4-1. Tank Waste Remediation System Process Flow Diagram. 31

4-2. Process Flow Diagram for Separations and Low-Activity Waste Campaign 34

4-3. Process Block Flow Diagram for High-Level Waste Campaign 37

4-4. Preliminary Site Selection for the Baseline Facilities 39

5-1. Basis for Life-Cycle Cost Estimates. 44

LIST OF TABLES

2-1. Life-Cycle Cost Summary. 10

2-2. Initial Capital Cost Estimate for the 11

2-3. Summary of Operating Costs 12

2-4. Optimized Processing Strategy Cost in Billions of Dollars. 12

3-1. Comparison of Retrieval Activities Between Baseline and Optimized Processing Strategy 23

5-1. Life-Cycle Cost Summary. 43

5-2. Initial Capital Cost Estimate for the 46

5-3. Melter Line Conversion Cost (Millions of 1995 Dollars Except Where Noted). . . . 48

5-4. Operating Cost Summary (Millions of 1995 Dollars Except Where Noted) 49

LIST OF TABLES (CONTINUED)

5-5. Single Line Melter Yearly Facility Staff and Cost for Low-Activity Waste Processing Campaign 50

5-6. Single Line Melter Yearly Facility Staff and Cost for High-Level Waste Processing Campaign 50

5-7. Single Line Melter Facility Consumable Costs (Millions of 1995 Dollars). 51

5-8. High-Level Waste Repository Cost Basis 52

5-9. Tank Waste Remediation System Program Cost Required To Implement the Optimized Processing Strategy. 53

5-10. Tank Waste Remediation System Program Cost Required To Implement the Optimized Processing Strategy With a Demonstration Phase. 54

LIST OF TERMS

BHA	Bulk Materials Handling Area
CCA	Cold Chemical Annex
CFBA	Contact Filter/Blower Annex
CSA	Container Staging Annex
CV	Column volume
CVOG	Condenser vessel offgas
D&D	Decontamination and decommissioning
DF	Decontamination factor
DOE	U.S. Department of Energy
DOE-EM	U.S. Department of Energy-Office of Waste Management and Environmental Restoration
DOE-RW	U.S. Department of Energy Office of Civilian Radioactive Waste Management
DCRT	Double-contained receiver tank
DSS	Double-shell slurry
DSSF	Double-shell slurry feed
DST	Double-shell tank
Ecology	Washington State Department of Ecology
EIS	Environmental Impact Statement
EPA	U.S. Environmental Protection Agency
ERC	Emergency Response Center
FAS	Fabrication and Assembly Shop
FAST-C	Freidman Analysis System Technique for Construction
FFA	Fan/Filter Annex
FOAK	First of a Kind
FTE	Full time equivalent
HEMF	High-efficiency metal fiber
HEPA	High-efficiency particulate air
HLW	High-level waste
LERF	Liquid Effluent Retention Facility
LETF	Liquid Effluent Treatment Facility
LAW	Low-activity waste
M&I	Maintenance and Integration
M&O	Maintenance and Operations
MOG	Melter offgas
MPC	Multi-purpose canister
MUB	Mechanical Utilities Building
MYWP	Multi-Year Work Plan
NCAW	Neutralized current acid waste
NRC	U.S. Nuclear Regulatory Commission
OPC	Other project costs
PFD	Process flow diagram
PNNL	Pacific Northwest National Laboratory

LIST OF TERMS (CONTINUED)

PUREX	Plutonium-Uranium Extraction
R&D	Research and development
RCFE	Regulated Complex/Facility Entry
SPF	Sequential Processing Facility
SST	Single-shell tank
TEC	Total Estimated Cost
TEDF	Treated Effluent Disposal Facility
TOE	Total operating efficiency
TPC	Total project cost
TRU	Transuranic
TWRS	Tank Waste Remediation System
WPH	Water Pumphouse
WESF	Waste Encapsulation and Storage Facility
WHC	Westinghouse Hanford Company

TANK WASTE REMEDIATION SYSTEM OPTIMIZED PROCESSING STRATEGY

1.0 INTRODUCTION

This report provides an alternative strategy evolved from the current Hanford Site Tank Waste Remediation System (TWRS) programmatic baseline for accomplishing the treatment and disposal of the Hanford Site tank wastes. This optimized processing strategy performs the major elements of the TWRS Program, but modifies the deployment of selected treatment technologies to reduce the program cost.

1.1 PURPOSE

This work was originally motivated by a desire to flatten the TWRS disposal program funding requirements to around $400 million per year, and yet retain the *Hanford Federal Facility Agreement and Consent Order* (Tri-Party Agreement) (Ecology et al. 1994) milestones to the extent possible. Thus, facility and processing concepts were optimized to reduce up front capital with minimal schedule impacts. Optimization occurred by processing low-activity waste (LAW) and high-level waste (HLW) sequentially instead of in parallel because parallel processing increases the peak funding requirements.

This report documents an alternate strategy for treating the tank waste at the Hanford Site. The current TWRS program baseline consists of enhanced sludge washing, cesium ion exchange, vitrification of LAW, and vitrification of HLW. In the baseline strategy, the facilities for LAW and HLW vitrification are deployed in parallel. The alternate strategy defined in this document incorporates all waste treatment functions and associated technologies currently defined in the TWRS program baseline into a single process facility that sequentially processes LAW and HLW.

1.2 CURRENT BASELINE ASSUMPTIONS

The TWRS has the mission to store, treat, and immobilize highly radioactive Hanford Site waste (current and future tank waste, and the strontium and cesium capsules) in an environmentally sound, safe, and cost effective manner (DOE 1993). To support this mission, the TWRS Program has ongoing activities to develop technologies, conduct engineering analyses, and prepare for design and construction of facilities necessary to remediate the Hanford Site tank wastes. As these activities progress, the TWRS plans to evolve the treatment strategy for the waste.

The U.S. Department of Energy (DOE) has an Environmental Impact Statement (EIS) underway to evaluate proposed actions of the TWRS. The baseline assumes the Record of Decision (DOE 1988) for the TWRS EIS shall require the retrieval of as much waste as technically and economically practical from single-shell tanks (SSTs) and double-shell tanks (DSTs). As such, the Record of Decision provides consistency with the DOE planning guidance (DOE 1993). The current guidance requires separation of the retrieved waste into LAW and HLW fractions. The guidance further requires the vitrification of the LAW and disposal of the waste on site. The DOE also plans to vitrify the HLW and dispose of it in a geologic repository.

The proposed physical systems for accomplishing the TWRS mission have been previously described in the *TWRS Functions and Requirements* (DOE 1994a draft, and DOE 1995a draft) and the *TWRS Process Flowsheet* (Orme 1995). Cost and schedule estimates are provided in the *TWRS Multi-Year Work Plan* (WHC 1994a, WHC 1995). Together, these documents comprise the TWRS program baseline.

1.3 ALTERNATE STRATEGY ASSUMPTIONS

The optimized processing strategy complies with the same functional requirements identified for the baseline program. The expected system performance requirements change to allow the postponing of HLW operations until after LAW processing occurs. This shift of the HLW campaign does not affect the functional analysis because such analyses are independent of time.

As previously discussed, the technologies for the TWRS do not change, but the temporal deployment of the technologies does change. Essentially all of the process and facility engineering analyses performed for the baseline applies to the alternate strategy. Changes in the analyses do occur as a result of the lower throughput requirements and the elimination of mission over-lap between LAW and HLW processing. Thus, the optimized processing strategy evolves the TWRS strategy as opposed to replacing the existing strategy with a completely new one.

A second refinement of the Sequential Processing Facility (SPF) takes advantage of a simplification in the separations flowsheet to further reduce the size of the facilities. This work is documented in Slaathaug (1996).

1.4 REPORT ORGANIZATION

This document provides both a description of the SPF and the balance of the TWRS to support the facility. A brief description of the report organization is provided below:

Chapter 2.0 Summary of Findings, provides the key findings of the document that include the process strategy for the optimized processing strategy, a comparison of the new strategy cost to the current baseline, and a comparison of the new strategy schedule to the current baseline.

Chapter 3.0 Description and Evaluation of the Tank Waste Remediation System, provides a description of the other five TWRS functions that must be accomplished to achieve the TWRS mission. These functions include (1) tank waste retrieval, (2) characterization, (3) tank farm upgrades and tank safety, (4) operations and maintenance, and (5) program management. This section also includes an evaluation of differences between the current TWRS operational scenario and the proposed optimized processing strategy.

Chapter 4.0 Description and Evaluation of the Sequential Processing Facility, provides a description and evaluation of the proposed facility. A process flowsheet has been developed and forms the basis for the discussion of the process and facilities. Process flow diagrams (PFDs) and the material balance for major process streams are provided in Appendix A. Appendix B contains the facility layouts for both combined separations and LAW vitrification and HLW vitrification, PFDs depicting the changes between the modes of operation, and a description of the conversion equipment. Appendix C contains the equipment lists for both modes of operation and support facilities.

Chapter 5.0 Cost Estimates, provides a summary of the cost information assembled to date for the optimized processing strategy. This chapter contains cost estimates for life-cycle cost and all of its elements consistent with the Multi-Year Work Plan (MYWP). In addition to the MYWP cost, the chapter includes an estimate for decontamination and decommissioning (D&D) of the facility. As of yet, no closure costs for the tanks have been estimated as part of the MYWP.

This page intentionally left blank.

2.0 SUMMARY OF FINDINGS

This report identifies a modification to the TWRS program baseline that allows incorporation of an innovative strategy for accomplishing the TWRS mission. This approach incorporates all waste pretreatment and immobilization functions into a single process facility called the SPF. The process scheme changes to sequential processing (i.e., separations and LAW vitrification followed by HLW vitrification). Sequential processing reuses a single facility to accomplish pretreatment and LAW vitrification followed by equipment replacement and subsequent HLW vitrification. Reuse of a single facility for multiple processing functions reduces capital and expense costs, minimizes the land committed for radioactive waste management, and reduces the D&D task.

2.1 SUMMARY OF SINGLE PROCESS FACILITY TREATMENT STRATEGY

The single process facility concept sequentially vitrifies the LAW and HLW separated from the tank waste. A site in the 200 East Area plateau of the Hanford Site has been identified to locate the facility. The facility separates tank wastes into LAW and HLW fractions using enhanced sludge washing and cesium ion exchange. Initially, the SPF vitrifies the LAW fraction in the combined separations and vitrification facility, while storing the HLW fraction in existing DSTs. After vitrifying the LAW fraction and replacing a portion of the equipment, the SPF vitrifies the HLW fraction.

As with the current baseline technology, the separations portion of the SPF conducts enhanced sludge washing using caustic and water solution and cesium ion exchange. The washed sludges are transferred to existing DSTs for blending and interim storage, until HLW vitrification is conducted. The existing tank waste supernatants and sludge wash solutions are processed to separate cesium (average solution decontamination factor [DF] of 100) by a single cycle ion exchange. The separated cesium is transferred to existing DSTs for interim storage until HLW vitrification is conducted.

The concentrated ion exchange effluent feeds the LAW vitrification portion of the facility. The design of the LAW vitrification portion is based on one, remotely operated, 120-Mg/d melter. The vitrified waste is in the form of glass cullet. This cullet is either poured alone or mixed with a sulfur polymer cement and poured into steel boxes for disposal in nearby concrete vaults. The LAW glass cullet contains 25 wt% Na_2O oxides. The steel boxes allow retrieval of the waste from the vaults.

After vitrifying LAW, the 120-Mg/d melter and LAW vitrification process equipment are replaced with a 20-Mg/d melter and canister handling equipment for vitrification of HLW. HLW is transferred from DSTs to the vitrification portion of the SPF. The vitrified waste is in the form of a glass monolith that is poured into canisters. The HLW glass contains about 48 wt% waste oxides.

2.2 FACILITY DESIGN

The combined separations and vitrification facility incorporates remote, contact, and no-maintenance areas into the design. The separations plant design uses a "minimum maintenance" philosophy for tanks, equipment, and piping. Maintenance and replacement of failed pumps, agitators, and instruments are accomplished using flask technology. The vitrification plant design uses a "remote maintenance" philosophy for tanks, equipment, and piping. This philosophy uses a transfer aisle in which a crane and manipulators maintain the equipment.

The main separations and vitrification processes are contained within a building about 100-m long, 60-m wide, 40-m high above grade, and 15-m below grade. The facility layout drawings (see Section 4.2), show the relative position of equipment, cells, and support systems with associated facility dimensions in plan and cross-section views. Figure 2-1 depicts an isometric view of the facility.

2.3 COST IMPACTS

The current baseline cost estimate comes from the Westinghouse Hanford Company's (WHC) programmatic estimates for accomplishing the mission. The mission is based on the Tri-Party Agreement (Ecology et al. 1994). The new processing strategy maintains the primary goals of the Tri-Party Agreement, but shifts many of the intermediate milestones to reduce costs.

2.3.1 Comparison to Multi-Year Program Plan

The *Tank Waste Remediation System Multi-Year Work Plan* (WHC 1994a) contains an estimate of the budget by year to accomplish the TWRS mission. For the new strategy, revisions to the TWRS Program baseline include several refinements to the technical scope and cost estimates that must occur. Specifically, the combined separations and vitrification facility, as detailed in Chapter 4.0, becomes the reference waste processing facility concept. The cost estimates for operating the tank system have been reduced to reflect the revised scope. Estimates of personnel necessary to operate waste retrieval, separations, LAW, and HLW vitrification processes have been revised. Chapter 5.0 provides an analyses of the life-cycle cost and its elements.

Figure 2-2 compares the estimated annual budgets from the MYWP's (WHC 1995) scope to the cost estimates developed for the optimized processing strategy. Significant reductions in both operating staff and capital construction costs result from incorporating the optimized processing strategy into the TWRS Program baseline. These savings occur without significant changes to the Tri-Party Agreement schedule.

Figure 2-1. Isometric View of the Sequential Processing Facility.

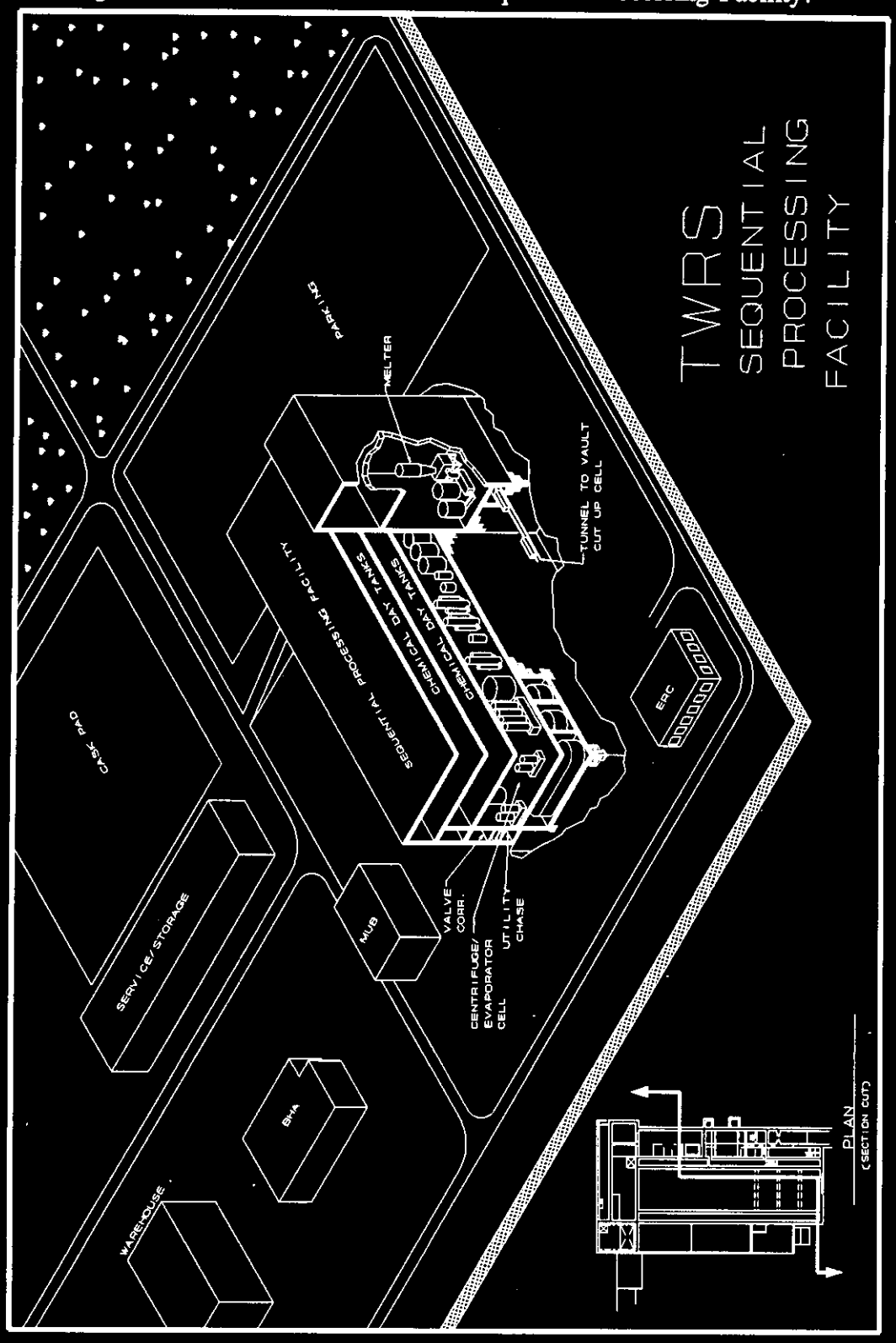

Figure 2-2. Alternative Funding Profile.

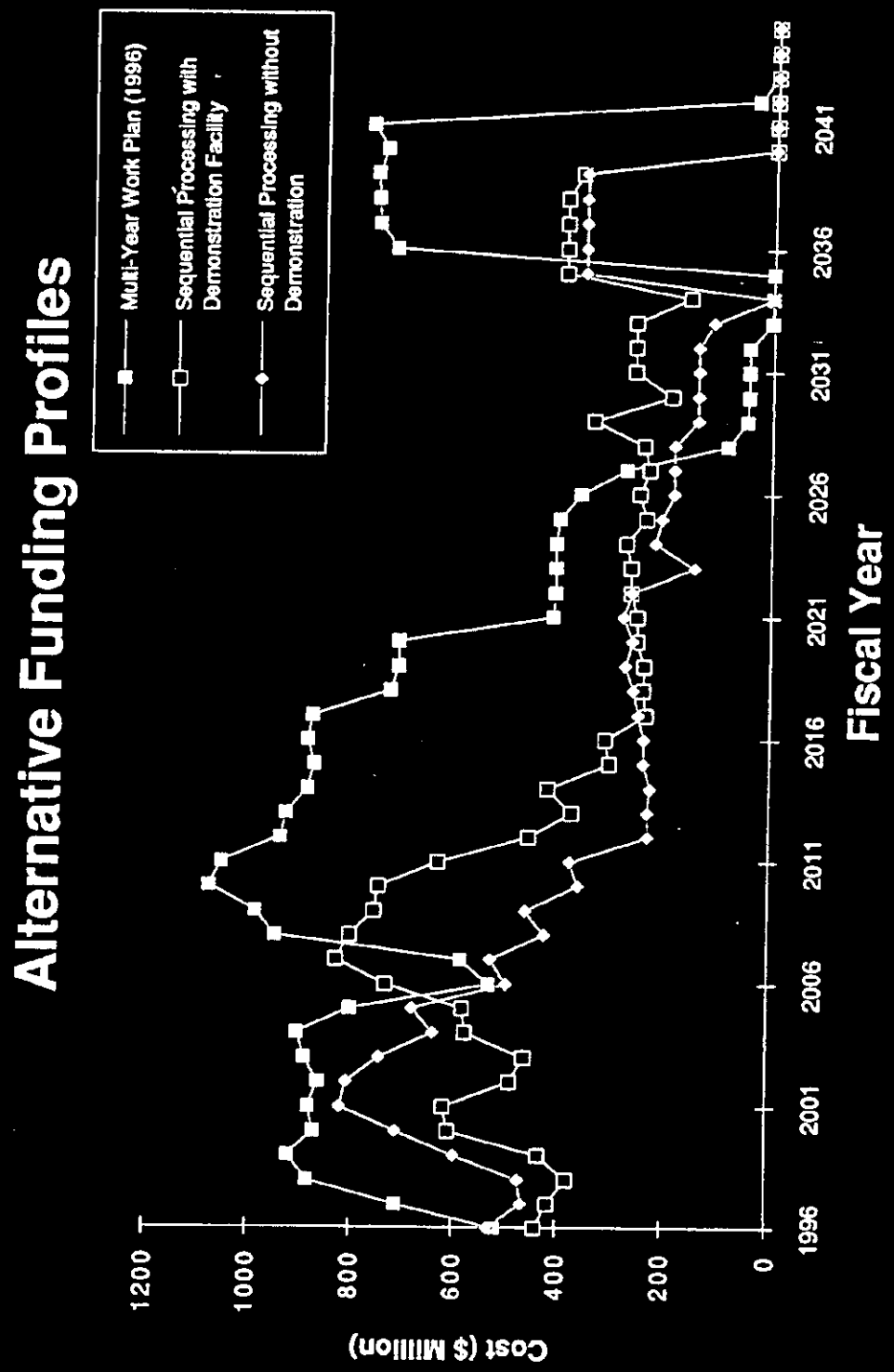

The reduced cost strategy represents the most recent evolution of the disposal program. The prior 1995 MYWP (WHC 1994a) program estimate was $40 billion. The 1996 MYWP (WHC 1995) estimate is $28 billion. Optimizations have resulted in refinements that reduce the MYWP costs for a variety of factors outside the scope of this document. As shown in Table 2-1, the reduced cost strategy is $15.6 billion in life-cycle costs for the total program (equivalent to the prior MYWP estimates).

Table 2-1 shows the cost elements for the optimized processing strategy life-cycle costs. These costs are developed in Appendix F. The reduced cost strategy (sequential processing concept plus other enhancements to the mission) actually accounts for about $2.5 billion in cost reductions to the program baseline. The primary elements of this reduction are as follows:

- A single facility saves the expense of a second, standalone HLW facility at a cost of about $1 billion.

- Use of a single processing line for LLW vitrification adds 4 years to the LLW mission, but saves 25 percent of the building footprint. The original two-line concept provided a 200 MT/day capacity, which could process the LLW in 14 years at 15 percent sodium oxide loading. Increased confidence in a LLW waste loading of 25 percent allows for a 40 percent reduction in capacity (from 180 to 110 MT/day on average). In addition, the 14-year vitrification mission supported the planned retrieval rate schedule. Use of an 18-year retrieval/LLW mission actually reduces the retrieval rates and vitrification peak capacity to 120 MT/day. These factors account for a reduction of about $700 million.

- Utilities and infrastructure are consolidated for a single facility. This factor reduces capital from about $500 million to $350 million.

- The SPF reduces peak operating staff by about 150 people for 5 years because it avoids concurrent operation of LLW and HLW processes. The same operators can be used for both campaigns. The HLW mission is shortened to 5 years because a larger capacity melter is used. Use of a single facility also reduces D&D costs. These operating cost savings amount to about $700 million.

Table 2-1 shows the impact on the optimized processing strategy life-cycle cost for the inclusion of a demonstration facility. The demonstration phase alternative has a higher life-cycle cost that reflects a longer operating campaign for the TWRS. Section 2.5 provides information on the impacts a demonstration phase has on the TWRS.

Table 2-1. Life-Cycle Cost Summary.

Cost element	Cost ($ billions)	
	Optimized processing strategy	Optimized processing strategy with demonstration phase
Program management	1.0	1.0
Operations and maintenance	1.8	2.9
Tank safety	0.2	0.2
Characterization	0.6	0.6
Disposal Program		
Retrieval	4.4	5.0
Facility capital (total project cost)[a]	2.0	2.6
Facility operating cost	3.8	3.8
High-level waste disposal[b]	1.8	1.8
Total	15.6	17.9

[a]Total project costs include total estimated cost (Table 2-2) and other project costs (Section 5.3.2).
[b]Based on single repository.

2.3.2 Sequential Processing Facility Cost Elements

The process and support facilities have a total estimated cost (TEC) of $1,450 million, in 1995 dollars. The estimate includes engineering, construction management, program management, and contingency. Table 2-2 shows the revised cost estimate breakdown.

Table 2-2. Initial Capital Cost Estimate for the Sequential Processing Facility.

Cost element[a]		Cost ($ millions)
Vitrification civil and structural		138.3
Equipment		
Vitrification Facility		
Building equipment		117.8
Process equipment		200.6
Support facilities		170.1
Total Direct Cost (DC)		626.8
Engineering (E)	at 40 Percent	250.7
Construction Management (CM)	at 10 Percent	62.3
Project Management (PM)	at 10 Percent	94.0
Contingency (C)	at 40 Percent	413.7
Total Estimated Cost (TEC) (rounded)		1,450

[a]The buildup for the TEC comes from the following relationships: CM = 0.1 * DC, E = 0.4 * DC, PM = 0.1 * (DC + CM + E), C = 0.4 * (DC + CM + E + PM), TEC = DC + CM + E + PM + C.

Fluor-Daniel, Inc., prepared the facility layouts and equipment lists for WHC. WHC reduced the original facility cost estimate prepared by Fluor-Daniel, Inc., by $85 million. This reduction reflects the findings from an independent cost estimate conducted by Stone and Webster (contained in Appendix D).

The SPF has two distinct processing modes: separations/LAW vitrification and HLW vitrification. Table 2-3 summarizes the total operating costs for each operating mode of the combined separations and vitrification facility. The combined separations and LAW vitrification mode has an annual operating cost of $97 million, for 18 years. The facility's annual operating cost increases to $133 million when conducting HLW vitrification, for 5 years. The increase comes from consumable expenditures (e.g., repository packages) that more than offset the reduction in staff during HLW vitrification.

Table 2-3. Summary of Operating Costs (Millions of Dollars).

Operating cost element	Facility mode	
(Based upon 18 years for separations and LAW vitrification; 5 years for HLW vitrification)	Separations/ LAW vitrification	HLW vitrification
Staff (from Table 5-4)	1,038	253
Chemicals (from Table 5-7)	127	8
Utilities (from Table 5-7)	177	123
Replacement equipment[a] (from Table 5-7)	162	25
LAW vaults and containers (from Table 5-7)	236	--
HLW storage pads, containers, and canisters (from Table 5-7)	--	253
Total	1,740	662

HLW = High-level waste
LAW = Low-activity waste
[a]Assumes during the last 5 years of LAW operation that this assessment is applied to HLW melter conversion.

Table 2-4 shows the division between capital costs and operating costs for the life-cycle cost shown in Table 2-1 for the optimized processing strategy without demonstration. The operating cost dominates the life-cycle cost, but the capital has a major impact on up front and peak funding demands of the program. These two impacts have serious implications on the program viability. To enhance the program viability, the optimized processing strategy reduces the up front funding and, therefore, flattens the funding peak.

Table 2-4. Optimized Processing Strategy Cost in Billions of Dollars.

Cost element	Capital cost	Operating cost	Total cost
Manage tank waste	0.5	3.1	3.6
Retrieve waste	2.0	2.4	4.4
Process waste	2.0	3.8	5.8
Process waste	--	1.8	1.8
Total cost	4.5	11.1	15.6

As shown in Table 2-4, the SPF consumes half of the total TWRS mission capital ($4.5 billion) for this strategy. This capital represents the majority of the capital needed early in the program. The other capital dollars for the program occur after the SPF commences operation in 2005.

The repository disposal fee used in the optimized processing strategy totals to $1.5 billion in 1995 dollars, which becomes $1.8 billion when escalated consistent with the MYWP. This 1995 value comes from information provided to DOE-EM from U.S. Department of Energy Office of Civilian Radioactive Waste Management (DOE-RW) (DOE-RW 1993). The DOE-RW recently provided more information (DOE-RW 1995), but information consistent with the MYWP has not yet arrived (i.e., Hanford's share for a single repository case). The new information from DOE-RW suggests Hanford's waste disposal fee for a two repository case may increase to between $4 and $5 billion. A repository disposal fee of $4 billion would escalate to $4.8 billion. This cost would significantly increase the portion of the operating cost for repository disposal (from less than 20 percent to greater than 30 percent).

2.4 SCHEDULE IMPACTS

DOE, the U.S. Environmental Protection Agency (EPA), and the Washington State Department of Ecology (Ecology) have entered into the Tri-Party Agreement (Ecology et al. 1994) to provide a framework and schedule for Hanford cleanup. Incorporation of the optimized processing strategy into the TWRS Program baseline requires modification of interim milestones established in the Tri-Party Agreement, but complies with the 2028 date to complete processing. These modifications are needed to reduce annual budget requirements consistent with projected Congressional appropriations for the Hanford Site.

The optimized processing strategy schedule development is based on the milestone dates in the January 25, 1994, Tri-Party Agreement (Ecology et al. 1994), modified to reflect delay in HLW Vitrification. These dates include the start of separations in the year 2004 to support a LAW Vitrification process start-up in the year 2005. The separated HLW goes to the HLW vitrification process that is scheduled to start operations in 2023. Completion of tank waste pretreatment and LAW/HLW vitrification would still be accomplished before December 2028, in accordance with the Tri-Party Agreement. Figure 2-3 contains a simplified schedule depicting the proposed revised Tri-Party Agreement milestones.

Figure 2-3. Comparison of the Tri-Party Agreement and Optimized Processing Strategy Schedules.

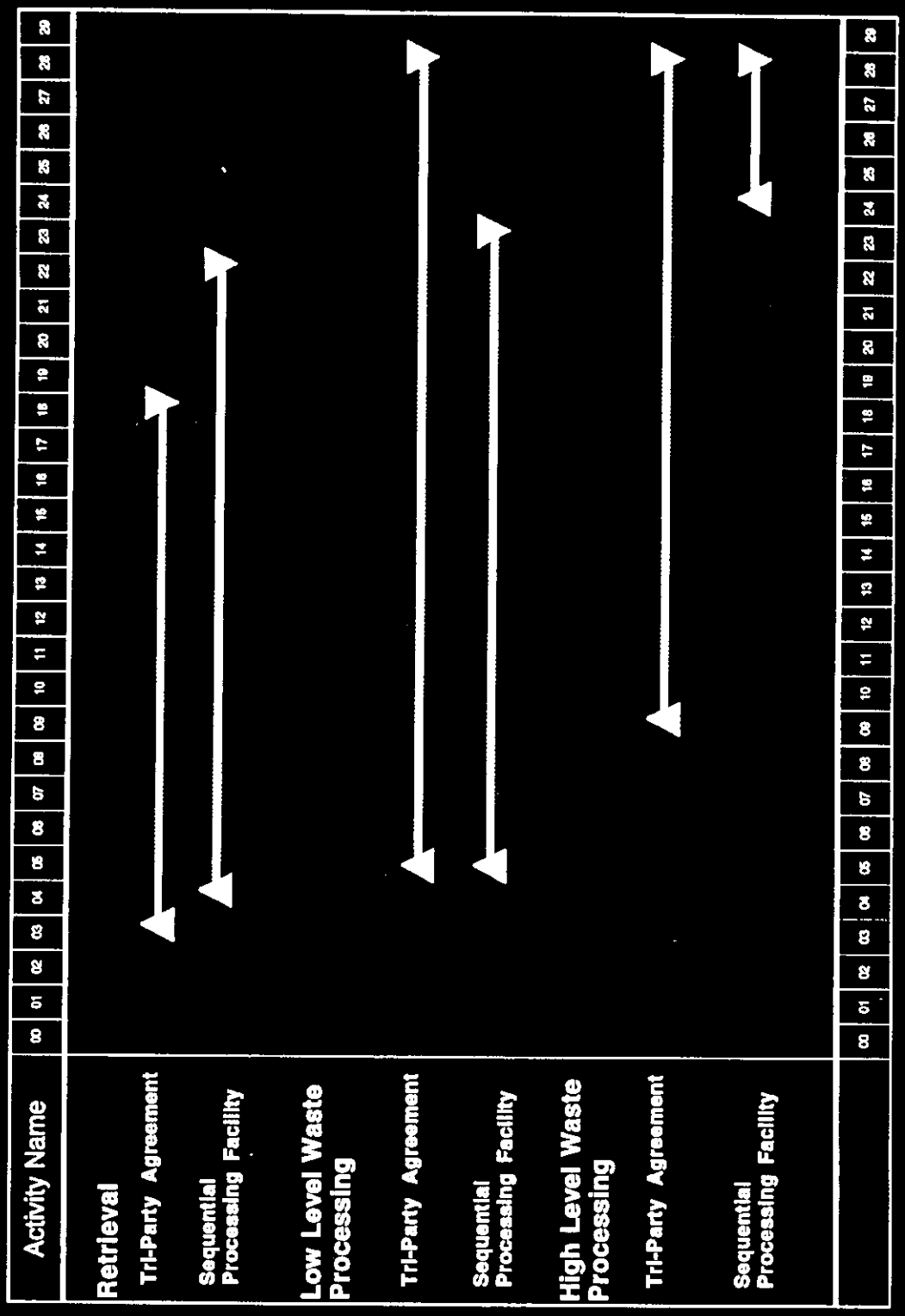

2.5 DEMONSTRATION PHASE BENEFITS AND IMPACTS

A demonstration phase could occur in any strategy before execution of the full retrieval mission. This section itemizes some of the potential benefits and impacts to the TWRS. This report includes a demonstration scale cost sensitivity case for the TWRS (Section 2.5.3). Large-scale hot testing has a number of cost and schedule penalties that may outweigh the benefits. The historic general guideline for nuclear chemical processing demonstration is to test at lab scale with radioactive material and conduct pilot to full scale with nonradioactive simulants. This philosophy provides the needed data to ensure confidence in design, but avoids the prohibitive cost and schedule impacts for construction and operation of a contaminated test facility.

2.5.1 Processing Experience

A pilot scale demonstration plant increases the program confidence from a business perspective by processing actual waste in demonstration scale equipment. Showing early progress is important to the stakeholders and serves to build momentum in the program. A demonstration phase would also assure resolution of outstanding flowsheet and technical uncertainties.

From a purely technical perspective, the test benefits are more difficult to justify when compared to the cost and schedule impacts. A demonstration phase does little to remove the uncertainties associated with a first-of-a-kind (FOAK) facility. Analysis by the Rand Corporation (Rand 1986) concluded that unless a process has been deployed commercially no reduction in the FOAK cost growth would occur. The Rand Corporation further defined commercially deployed as a process built to produce product at the intended scale of the FOAK facility, not data at any scale.

A Foster Wheeler study completed earlier this year (Gasper 1995) examined the cost benefit and risk assessment for various testing alternatives and concluded the following:

> "The primary conclusion reached in this study is that including pilot-scale testing using actual waste, beyond laboratory- and bench-scale testing contained in the Baseline Alternative is not cost-effective. The primary reasons for this are as follows:
>
> 1. Pilot-scale testing in new facilities using actual tank waste cannot provide data in time to support the current design schedule.
>
> 2. Slippage of the schedule to accommodate this testing would extend the required period of operation of the Hanford Site Tank farms, resulting in increased costs and risks.

3. The baseline testing strategy, with its combination of laboratory-scale and bench-scale testing using actual and simulated waste, pilot-scale testing using simulants, and full-scale demonstration of the selected unit operations adequately addresses the design concerns."

2.5.2 Schedule Impacts

The demonstration phase adds at least 5 years to the completion date of the mission (operation time of demonstration facility). This slippage applies to the completion date of the TWRS mission. To recapture this lost time, the TWRS would have to build a larger capacity full scale plant.

To gain full advantage from the demonstration scale facility, the TWRS has to delay design and construction of the full scale plant until completion of data analysis from the demonstration scale plant. Assuming operation of a demonstration scale plant commences in 2002, the demonstration plant operates for 5 years, and analysis takes at least one more year; detail design (Title I equivalent) can not commence until 2009. With final design and construction taking approximately 6 years, this time scale translates to an 11-year delay in the current baseline in which operation of the full scale plant occurs in 2015.

The sensitivity study (included in this report in Section 2.5.3 and 5.8) assumes only the 5-year delay. Thus, the demonstration scale plant and the full scale plant have considerable overlap. Benefits identified for a demonstration scale plant diminish unless a longer time delay occurs.

2.5.3 Cost Impacts

The demonstration facility's cost is approximately $300 million for a LAW only mission at 15 MT/day of glass processing rate. Startup, operations, D&D of the facility, plus escalation account for the other $300 million for a total increase of $600 million. The extended operating time adds the annual tank farm operating cost of $175 million to the program for 5 years ($875 million total). The $175 million includes operating plus tank upgrades. Also, included is the assumed size and infrastructure impacts ($150 million). Other expenses (escalation) of $100 million increase the total operations and maintenance impact to $1.4 billion. These costs are comparable to WHC estimates of a facility scoped for privatization.

3.0 DESCRIPTION AND EVALUATION OF THE TANK WASTE REMEDIATION SYSTEM

This chapter discusses changes in the TWRS functional requirements for sequential processing. The primary changes in the expected performance come from the reduction in the number of simultaneous activities. For example, the delay in the start of the HLW vitrification allows significant reductions in need for early characterization and retrieval of sludges.

For the optimized processing strategy, work to date has focused on the separations, LAW vitrification, and HLW vitrification. This focus came about because these areas represented more than 60 percent of life-cycle cost from the MYWP (WHC 1994a). In the future, WHC has planned to shift the focus to retrieval, upgrades, and ongoing operations for these areas that will consume the largest portion of the current projected program dollars.

3.1 BASELINE OPERATIONAL SCENARIO

The TWRS operational scenario describes the physical system for accomplishing the TWRS mission as defined by the TWRS functions and requirements (DOE 1995a). The TWRS has issued a detailed description of these functions and activities planned to accomplish the mission (Johnson 1995). In addition to providing information from the operational scenario, the following sections address how the operational scenario changes to incorporate the optimized processing strategy.

3.2 MAINTENANCE AND OPERATIONS OF TANK FARMS

The Maintenance and Operations (M&O) organization within the TWRS performs the Manage Tank Waste function. This function includes the store waste, transfer waste, characterize waste, and concentrate waste functions. For the next 10 years (until 2005), the TWRS operating mission will be to manage and store tank wastes. This mission includes mitigating/resolving tank waste safety issues, salt well pumping SSTs, receiving and storing wastes generated during terminal clean out of inactive chemical processing facilities, and waste concentration operations (using the 242-A Evaporator-Crystallizer).

The duration and scope of the current Maintenance and Integration (M&I) mission constitutes a major change from the MYWP assumptions to the optimized processing strategy assumptions. The MYWP assumes the M&I continues beyond the start of retrieval and does not end until 2028. The optimized processing strategy assumes the M&I achieves the controlled, clean, and stable condition before 2000 and transitions the tank farm staff to retrieval operations by 2005. The optimized processing strategy assumptions significantly reduce the cost and scope of the M&I and eliminates the staff overlap between the M&I and retrieval as found in the MYWP.

Also, the optimized processing strategy accounts for the many economies the M&O staff have identified over the last year. The M&O staff have greatly reduced the Program Management, Tank Safety, and Characterization costs (shown in Appendix F). The optimized processing strategy assumes similar reductions for the Upgrades Program.

3.2.1 Characterize Waste

The TWRS obtains physical and chemical characteristics of the different tank wastes by review of historical processing data, in situ analysis, and/or physical sampling. These characteristics aid in resolving safety issues; establishing the safe operating basis for the tank farms; determining the 242-A evaporator operating conditions; designing waste retrieval systems; and developing and testing flowsheets for separations, LAW immobilization, and HLW immobilization processes. The TWRS anticipates the completion of all tank waste characterization by September 30, 1997, as part of the Secretary of Energy's safety initiatives. The *Waste Tank Summary* report provides a schedule for obtaining samples of tank wastes for characterization (WHC 1994b).

The process design characterization requirements decrease in support of the optimized processing strategy. The current baseline seeks to characterize the sludges from tank waste before design of the HLW vitrification facility. The delay of the design of HLW vitrification until after retrieval of a significant portion of the sludges, eliminates the need for this characterization effort. As the retrieved sludges pass through sludge washing operations, samples drawn can provide extensive knowledge of the sludges. This knowledge can provide the basis for HLW vitrification formulation and equipment design.

3.2.2 Transfer Stored Waste

The TWRS transfers wastes contained within the SSTs and DSTs to DSTs using the existing underground pipelines and double-contained receiver tanks (DCRTs). No additional transfer system components are anticipated to be needed for the management and storage of tank wastes, with the exception of salt well pumping components beyond currently planned activities.

The baseline has not selected a site for the TWRS Treatment Complex. This lack of site selection requires the baseline to develop the transfer system independent of the eventual destination of the waste for processing. The baseline for transferring waste (W-058, W-028, and W-314) does not have as much integration as possible and inefficiencies may occur.

The optimized processing strategy takes the recommendation from the TWRS site selection evaluation (Shord 1995) as a basis for facility location. This site allows the optimized processing strategy to provide an integrated transfer system that can eliminate any inefficiencies in the current transfer system.

3.2.2.1 Single-Shell Tank Stabilization. Transfer of interstitial waste solutions from SSTs into DSTs (i.e., salt well pumping) is being conducted to reduce the likelihood and consequences of leaks from these older tanks. At the completion of stabilization, all SST's will contain a maximum of 190 m^3 of drainable interstitial liquid. The TWRS anticipates stabilization of all SSTs by September 30, 2000, in accordance with the Tri-Party Agreement milestone M-41-00 (Ecology et al. 1994, pg. D-74).

3.2.2.2 Waste Transfers to Support 242-A Evaporator-Crystallizer Operation. Transferring of tank waste to support the 242-A Evaporator-Crystallizer operation will be carried out in the DSTs of the A Farm Complex to reduce the waste volume. The volume reduction allows the transfer of new waste to the DSTs from retrieval of high-heat waste in tank 241-C-106, salt well pumping, or terminal clean out of older facilities such as PUREX and B-Plant. Waste solutions generated from facilities not part of the TWRS (e.g., B Plant, T Plant, PUREX, Waste Sampling and Characterization Facility, 100 N Reactor) transfer into DSTs either through underground pipelines or the 204-AR railcar unloading facility.

3.2.2.3 Cross Site Transfer System/Aging Waste Transfer Lines. The cross site transfer system is used to transfer waste solutions collected in tank 241-SY-102 to the 200 East Area DSTs. Waste solutions collected in tank 241-SY-102 are generated from salt well pumping, terminal clean out of Plutonium Finishing Plant, operation of the 222-S Analytical Laboratory, and operation of the T Plant Decontamination Facility.

The existing cross site transfer system consists of six transfer lines, four of which are either plugged or suspected of having failed and the remaining two are of questionable integrity. In the spring of 1995, the TWRS conducted an integrity assessment of the remaining two transfer lines that showed the lines can be used. A replacement cross site transfer system will be provided by Project W-058, Cross-Site Transfer System. In accordance with the Tri-Party Agreement milestone M-43-07, Project W-058 is anticipated to be completed and operational by February 28, 1998 (Ecology et al. 1994, pg. D-81).

The aging waste transfer lines also are planned as the main transfer line from the DSTs to the planned pretreatment and vitrification facility. New underground pipelines will be provided from the waste retrieval annexes and DST farms to the pretreatment and vitrification facility by tie-in to the cross site lines provided by W-058.

3.2.3 Concentrate Waste

The TWRS uses the 242-A Evaporator-Crystallizer to concentrate waste. The 242-A Evaporator-Crystallizer is located in the 200 East Area of the Hanford Site just North of the 241-AW Tank Farm. Originally built in 1976, the 242-A Evaporator-Crystallizer reduces the volume of wastes stored within the Hanford Site underground storage tanks.

The Liquid Effluent Retention Facility (LERF) collects the process condensates from the 242-A Evaporator-Crystallizer. The LERF has a hold up of about 50,000 m^3 of process condensates, with 50 percent spare capacity. The 200 Area Liquid Effluent Treatment Facility (LETF) processes the condensate from the LERF to remove hazardous constituents before discharge to the 200 Area Treated Effluent Disposal Facility (TEDF). The TWRS does not include these facilities.

After a series of upgrades, the TWRS began to concentrate waste with the 242-A Evaporator-Crystallizer in April 1994. The TWRS plans to operate the facility as necessary to reduce waste volumes requiring storage in the DST system. The recent series of upgrades to the 242-A Evaporator-Crystallizer (Project B-534) should extend the service life to 2005. However, additional modification to the ventilation components of the 242-A Evaporator-Crystallizer may be necessary to accomplish this.

3.2.4 Tank Farm Restoration and Safe Operations Upgrades

Various upgrades to the SSTs and DSTs are being conducted to improve operations, provide instrumentation for monitoring of tank waste conditions (e.g., waste temperature, liquid level, leak detection), and mitigate and/or resolve safety issues. Electrical, instrumentation, ventilation, and underground waste transfer pipeline upgrades for the DSTs will be provided by Project W-314, Tank Farms Restoration and Safe Operations. Project W-314 will be conducted in phases, with completion of scheduled activities to occur before commencing waste retrieval actions.

Ventilation upgrades to the 241-AY and 241-AZ tank farm were identified before the conception of Project W-314 and need to be conducted near term. Project W-030, AY/AZ Primary Ventilation System Replacement, will provide the necessary modifications to the 241-AY and 241-AZ tank farm ventilation system. Project W-030 will be completed by December 31, 1996, in accordance with the Tri-Party Agreement milestone M-43-01 (Ecology et al. 1994, pg. D-78).

Only upgrades necessary to support the controlled, cleaned, and stable storage philosophy will occur. Other upgrades to support enhanced operations, such as the W-314 project, will be reviewed for applicability under this alternate strategy.

3.3 DISPOSAL OPERATIONS

The disposal operations consist of the Process Waste Function from the Functions and Requirements (DOE 1995a). These operations include retrieval, in-process transfer, LAW immobilization, and HLW/TRU immobilization functions.

The SPF accomplishes the Pretreat Waste, Immobilize LAW, Immobilize HLW, and Prepare Cesium/Strontium Capsules for Disposition functions (DOE 1995a). These functions are accomplished in a combined waste separations and vitrification facility. The processing system is described for the combined waste separations and vitrification facility in Chapter 4.0. Section 4.1.1 discusses the interim storage of in-process waste solution (e.g., retrieved tank waste, concentrated cesium eluate, and pretreated HLW sludges/solids). Section 4.1.2 provides an overview process description for the waste separations and LAW vitrification. Section 4.1.3 provides an overview process description for HLW immobilization.

3.3.1 Retrieve Tank Waste

There are numerous potential sequences for retrieving waste from Hanford Site SSTs and DSTs. Candidate tank waste retrieval sequences need to reduce environmental and safety risks, minimize the need for construction of additional DSTs (which are costly and require long lead time to construct) and support the operating requirements of both the LAW and HLW processing systems. The tank waste retrieval sequence for the optimized processing strategy operational scenario should not differ significantly from the current operational scenario. Other tank waste retrieval sequences are continuing to be evaluated by the TWRS Program.

The primary goal of retrieval is to support both LAW and HLW processing and to do so in a manner that minimizes waste storage needs and environmental and safety risks. Figure 3-1 shows the preliminary sequence for retrieving waste that focuses on this goal and is governed by processing constraints. A detailed description of the operational basis and constraints can be found in the TWRS operational scenario (Johnson 1995). In general, the sequence focuses on providing supernatant with few solids as early as possible as feed for pretreatment and LAW vitrification, then shifts to high solids slurries for blending and feed to HLW vitrification.

Additionally, the optimized processing strategy operational scenario defers the development and deployment of secondary retrieval systems. For the DSTs, this deferral delays or eliminates the need for mixer pump installation beyond those pumps in Project W-211. For the SSTs, this deferral delays or terminates the need for long-reach arms. In both cases, the deferral comes because the operational scenario focuses on the processing of supernatants and salt cake first. The retrieval of settled sludges occurs in support of HLW treatment processing that occurs after 2024 in the optimized processing strategy. Table 3-1 depicts the changes from the current operational scenario retrieval scheme to the optimized processing strategy operational scenario retrieval scheme.

Figure 3-1. Tank Waste Retrieval Sequence.

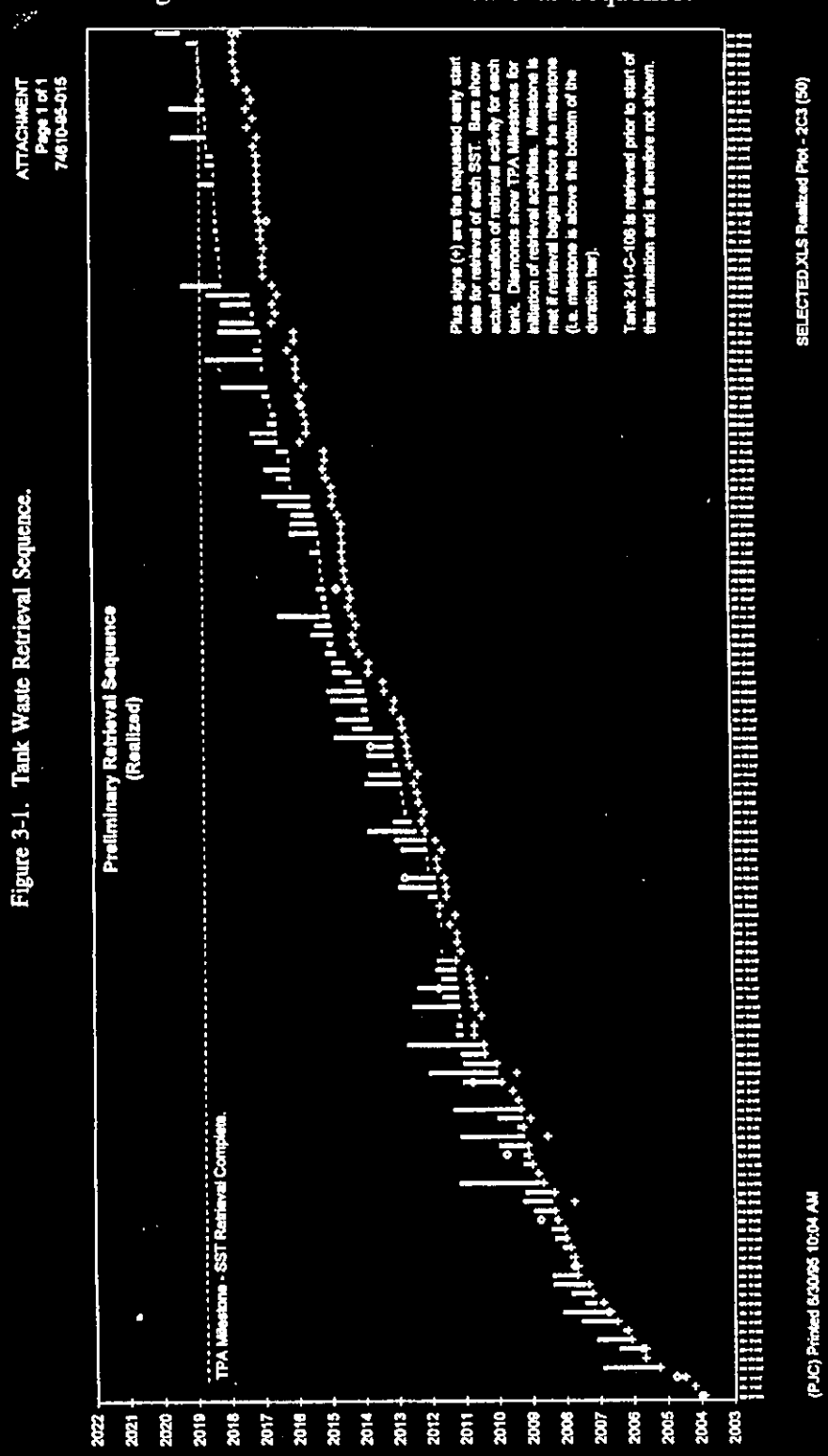

Table 3-1. Comparison of Retrieval Activities Between Baseline and Optimized Processing Strategy.

Strategy element	Current operational scenario	Optimized Processing Strategy operational scenario
Double-shell tank retrieval strategy	Install mixer pumps in 20 DSTs in Projects W-211 and a follow on project and use transfer pumps in the remaining DSTs	Install mixer pumps only in the tanks identified in Project W-211 and use transfer pumps in the remaining DSTs
Double-shell tank waste process campaign	2004-2007	2004-2010
Single-shell tank retrieval strategy	Single system per tank: - 110 sluice - 49 arm	Sluice all tanks and deploy a secondary system as necessary in a tank
Single-shell tank waste process campaign	2003-2018	2008-2022

The tank waste retrieval sequence for the optimized processing strategy operational scenario retrieves tank wastes at a rate slower than specified in the Tri-Party Agreement (Ecology et al. 1994, pg. D-89 and D-90). This slower waste retrieval rate is necessary to reduce the estimated annual budget consistent with projected Congressional appropriations for the Hanford Site and to minimize the need for construction of additional DSTs.

The tank waste retrieval methods and sequence selected directly influence the waste transfer methods. The baseline operational scenario (Johnson 1995) assumes tank wastes will be primarily retrieved as liquids containing solids. Transfer of retrieved tank wastes is assumed to be conducted using underground pipelines to provide radiological shielding and waste containment.

Waste retrieval occurs primarily by sluicing for both SSTs and the majority of DSTs. Mixer pumps are used in DSTs that will contain/accumulate significant quantities of sludge and may be used as feed tanks for processing. Retrieval begins with mobilization of the waste and ends with transfer to the DST system for storage and feed to pretreatment. Additional waste retrieval using enhanced/alternative technologies may be necessary to remove difficult waste forms and/or prepare tanks for turnover to closure. The need for enhanced/alternative waste retrieval systems is speculative and these systems are not included in this strategy.

The requirement of a single system per tank in the baseline operational scenario led to the selection of arm-based retrieval systems for SSTs. This selection process (Krieg 1992) eliminated the use of robotic devices for retrieval because of the concern such a system would sink in soft sludges. The optimized processing strategy operational scenario has allowed the reconsideration of robotic devices because sluicing of the tanks removes soft sludges. Robotic devices allow a significant cost savings over arm-based systems because the robots do not need the large above ground infrastructure identified for arm-based systems.

3.3.2 Separations

The initial feeds for sludge/solids separations consist of the DSS and DSSF wastes. These wastes contain primarily cesium in the supernatant and precipitated aluminum compounds, strontium, and TRU elements in sludges. Approximately 1,300 m^3 of sludges and 4,200 m^3 of DSS are identified in six (241-AN-103, 241-AN-104, 241-AN-105, 241-AP-105, 241-AW-101, and 241-AW-104) DSTs (WHC 1994b). The sludge volume could be considerably more, since sludge level measurements have not been conducted in three of these tanks (241-AN-105, 241-AP-105, and 241-AW-101) after being filled with DSSF. Additionally, evaporation of existing dilute tank wastes is being conducted to manage tank wastes (see Section 3.2.3), which generates additional DSSF and may generate additional sludges.

Before cesium removal from the DSSF/DSS supernatants, these retrieved tank wastes will be filtered to separate suspended solids and thereby avoid plugging the cesium ion exchange column(s). If the DSSF/DSS solids contain excessive radionuclides, the solids recovered from filtration of DSSF/DSS will be washed using a 3*M* sodium hydroxide solution to dissolve aluminum compounds (i.e., caustic leaching). Residual solids will be washed with water following caustic leaching to remove dissolved compounds in the interstitial liquid. Both the caustic leach and water wash solutions will be processed to remove cesium using the same ion exchange system used for supernatant pretreatment. The residual solids will be combined with the washed NCAW solids contained in tank 241-AZ-101 (see Section 3.2.3.1).

During the processing of the DSSF/DSS sludges/solids, retrieval of salt cake wastes from 241-TX and 241-U farms will be on going. Sludges/solids entrained with these retrieved salt cake wastes will be the next feed source for sludges/solids pretreatment.

The Tri-Party Agreement schedules retrieval of 241-TX farm salt cake waste to commence by October 2004. However, the optimized processing strategy does not begin supernatant separations processing of retrieved 241-TX farm salt cake waste until January 2010. Separations of 241-TX farm and other retrieved sludges/solids is conducted in a similar manner as described for DSS/DSSF sludges/solids and will be conducted during supernatant pretreatment.

3.3.3 Low-Activity Waste Vitrification and Disposal

The LAW fraction generated during separations of Hanford Site tank wastes will be vitrified to immobilize radionuclides and other hazardous waste components before disposal at the Hanford Site. The LAW will be disposed in a manner that allows for future retrieval for up to 50 years if future conditions warrant. The LAW vitrification process will be contained in a facility that also houses the supernatant and sludges/solids pretreatment processes. Hot operations of the LAW vitrification process is planned to commence in 2004.

As with the pretreatment processes, the LAW vitrification process capacity is designed to support completion of tank waste retrieval by September 2022. Also, it minimizes any need to construct additional DSTs for interim storage of tank wastes. Vitrification of the LAW fraction is projected to be completed approximately 4 years in advance of the Tri-Party Agreement milestone M-60-00 (Ecology et al. 1994, pg. D-98). To support this schedule, the nominal design capacity of the LAW process is 120 Mg/d of glass, at a total operating efficiency of 60 percent, yielding a net production capacity of 72 Mg/d. The LAW vitrification process uses a single glass melter.

Pending the completion of these evaluations, the reference LAW form is a glass cullet in a sulfur polymer cement binder (Orme 1995). The LAW glass contains nominally 25 wt% sodium oxide, with the waste form being approximately 70 percent glass and 30 percent sulfur polymer cement binder on a volume basis. The work to date favors placing waste (glass cullet in sulfur polymer cement binder) in 32-m^3 steel containers for disposal in near surface concrete vaults. Based on processing all tank wastes using the enhanced sludge wash pretreatment process, approximately 245,000 m^3 of glass in sulfur product will be produced.

The LAW fraction from pretreatment of the DSS, DSSF, and NCAW supernatants will comprise the initial feed for the LAW vitrification process. At a nominal production capacity of 72 Mg/d, the LAW fraction from pretreatment of DSS, DSSF, and NCAW supernatant will comprise approximately 3 years of production. Allowing for inefficiencies relating to start up of a new facility, these wastes will be processed in about 4 years, from June 2005 through December 2009. Blending of feed solutions for vitrification will be minimal since the composition of the LAW fraction is fairly consistent; containing primarily sodium, with potassium, aluminum, and phosphate as the next most abundant cations. The LAW glass resulting from vitrification of pretreated DSS, DSSF, and NCAW supernatant would contain about 25 wt% sodium oxide, 2 to 3 wt% potassium oxide, 5 wt% aluminum oxide, and 1 wt% phosphate. Consistent with pretreatment processing, subsequent feed sources for the LAW vitrification process will be the LAW fraction from pretreatment of retrieved salt cake (initially from 241-TX farm) waste and sludge wash solutions.

3.3.4 Immobilize High-Level/Transuranic Waste

The HLW/TRU waste fraction (i.e., solids and cesium solution) separated during pretreatment of Hanford Site tank wastes will be vitrified to immobilize radionuclides and other hazardous waste components before disposal at a combined commercial spent nuclear fuel and DOE HLW repository. The HLW vitrification process will be installed in the combined separations and vitrification facility after completing LAW vitrification. Equipment used for LAW vitrification will be removed and replaced with HLW vitrification equipment or it may be reused (after any necessary modifications) during the HLW campaign.

3.3.4.1 Vitrification of High-Level/Transuranic Tank Waste. The HLW vitrification process capacity is designed to support completion of tank waste vitrification by December 2028, while minimizing capital and operating costs. This represents a 5-year campaign duration. The HLW vitrification process nominal design capacity is 20 Mg/d of glass, at a total operating efficiency of 60 percent, yielding a net production capacity of 12 Mg/d. The HLW vitrification process utilizes a single glass melter. If development of the enhanced sludge wash process is unsuccessful and simple sludge washing is used, the HLW campaign duration would increase to about 14 years from processing the estimated 62,800 Mg of washed sludges at 25 wt% waste oxide loading.

Pending the completion of these evaluations, the reference HLW form is a 45 wt% waste oxide glass monolith contained in a 0.68-m o.d. by 4.57-m length (1.26-m^3 capacity at 90 percent fill) canister (Orme 1995). The 1.26-m^3 canister is selected to minimize the repository disposal fee (DOE-RW 1993).

Feed for the HLW vitrification process will be the blended HLW fraction from pretreatment of retrieved SST and DST sludges/solids and the cesium from the supernatant pretreatment process. Blending of these feeds solutions for vitrification will be necessary to avoid increasing the HLW glass composition due to individual waste component limits. Assuming optimal blending, approximately 7,250 canisters would be produced from vitrification of the HLW fraction of the enhanced sludge wash process (based upon material balance in Appendix A). HLW canisters will be overpacked in Multi-Purpose Canisters (MPCs) and temporarily stored at the Hanford Site until a geological repository is available.

3.3.4.2 Prepare Cesium/Strontium Capsules for Disposal. Encapsulated cesium and strontium radionuclide sources are currently stored in the Waste Encapsulation and Storage Facility (WESF) at the Hanford Site. The *Final Environmental Impact Statement for the Disposal of Hanford Defense High-Level, Transuranic and Tank Wastes, Hanford Site, Richland, Washington: Record of Decision* (DOE 1988) specified the "... encapsulated cesium and strontium wastes will continue to be stored safely until such time as a geologic repository is ready to receive waste for disposal. Before shipment to a geologic repository, these wastes will be packaged in accordance with repository waste acceptance specifications." (DOE 1988).

Pending completion of this evaluation, it is assumed the cesium and strontium capsules can be packaged to meet geological waste acceptance specifications. The TWRS Program will receive the cesium and strontium capsules from the interim storage facility and package these wastes in accordance with the geological repository waste acceptance specifications. The combined pretreatment and vitrification facility will include features that will support the receipt and repackaging of cesium and strontium capsules.

3.3.4.3 Interim Store Immobilized Waste. The spent nuclear fuel/HLW geological repository is scheduled to begin receipt of HLW beginning in 2015 (DOE 1994b, pg. 26). It is anticipated HLW will be initially received from other DOE sites (i.e., West Valley Demonstration Project and Savannah River Site) since these sites will have already completed immobilization operations. Sufficient interim storage capacity for all the HLW MPCs and overpacked capsules MPCs will be provided at the Hanford Site. The interim storage facility is envisioned to be above grade concrete pads with a surrounding metal weather enclosure. The interim storage facility will have equipment for monitoring storage conditions and to load the MPCs onto vehicles for transport to the repository.

This page intentionally left blank.

4.0 DESCRIPTION AND EVALUATION OF SEQUENTIAL PROCESSING FACILITY

Waste processing in the SPF occurs in a sequential fashion. The facility initially processes the tank waste separating the waste into LAW and HLW fractions and vitrifies the LAW. During this period, the separated HLW accumulates in DSTs for processing at the end of the LAW campaign. At the end of the LAW campaign, the equipment replacement and conversion to support HLW processing occurs.

4.1 PROCESS DESCRIPTION

The SPF uses a similar process as described for the baseline (Orme 1995). The process rate and use of out-of-tank sludge washing constitute the only changes of significance. For the baseline, equipment has a design process rate necessary to the production of 200 Mg/d of LAW glass and 20 Mg/d of HLW glass. The SPF has a design rate of 120 Mg/d for LAW glass. Equipment is replaced after the LAW campaign to support the 20 Mg/d HLW glass production. The basis for out-of-tank sludge washing comes from a series of technical studies performed by Raytheon-BNFL (Raytheon 1995a, 1995b, 1995c).

Figure 4-1 provides a top-level flowsheet for the TWRS mission. This flowsheet shows the major streams and their compositions for feeds to the facility; sludge washing/leaching; cesium ion exchange columns; and the streams leaving the facility as LAW product, HLW for interim storage, and the vitrified HLW product.

The average TOE of the combined separations and vitrification facility is assumed to be 60 percent. The historical TOE for the design of Hanford facilities has been 72 percent. With this assumption, all equipment is sized to complete the separations and LAW vitrification portion of the TWRS mission in 18 years. The replacement equipment is sized to complete the HLW vitrification in 5 years.

4.1.1 In-Process Waste Storage System

The in-process waste storage function includes all storage activities following the initial retrieval of waste. This function primarily consists of storing retrieved waste, washed sludges, and the removed cesium until the SPF can process the material. Existing DSTs, after initial waste retrieval, will be used to store in-process waste solutions.

This page intentionally left blank.

Figure 4-1. Tank Waste Remediation System Process Flow Diagram.

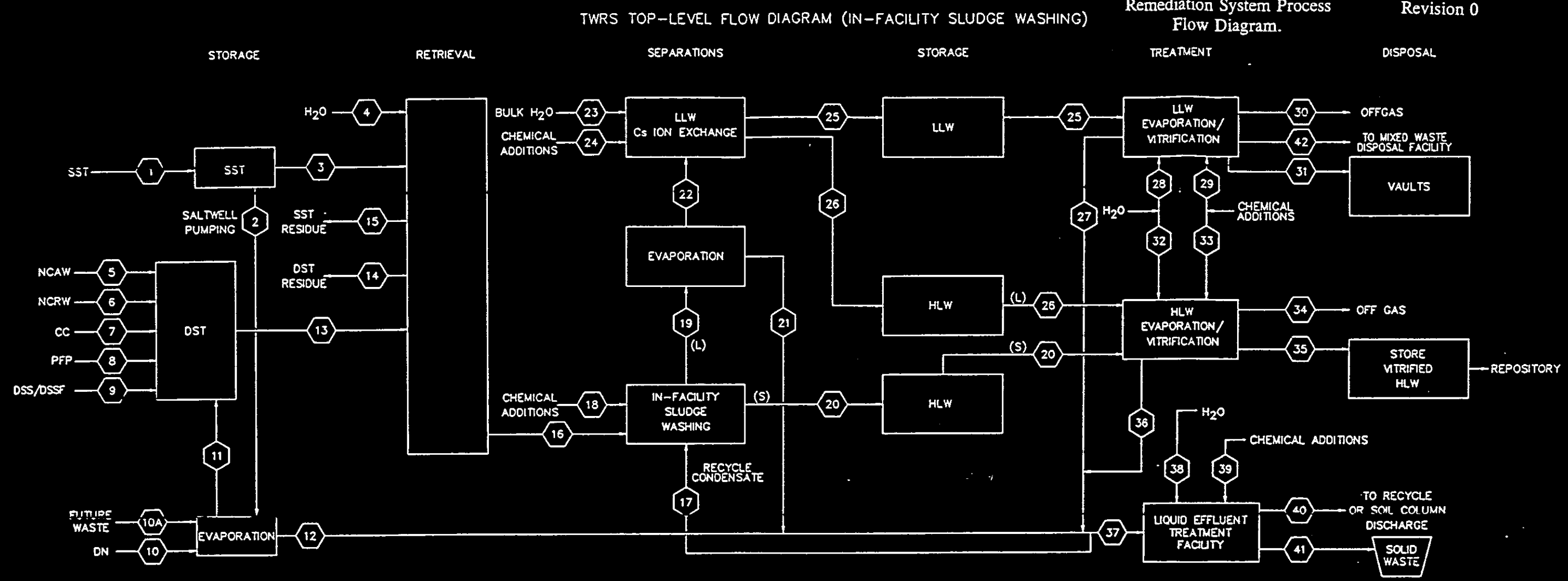

TWRS Sequential Processing Alternative Flowsheet - Top-Level Material Balance

STREAM NUMBER	1	2	3	4	5	6	7	8	9	10	10A	11	12	13	14	15	16	17	18	19	20	21	22	23	24	25	26	27	28	29	30	31	32	33	34	35	36	37	38	39	40	41	42
Total Mass Flow, (MT)	6.04E+5	1.40E+4	5.90E+5		1.22E+4	1.48E+4	5.59E+4	1.83E+4	2.78E+4	4.42E+4	4.36E-3	2.71E+4	3.55E+4	1.56E+5			7.48E+5	3.69E+5	5.65E+4	1.03E+6	1.41E+5	3.39E+5	6.87E+5	9.15E+4	7.03E+3	7.72E+5	1.19E+4	1.20E+6	5.82E+5	4.66E+6	4.14E+6	5.94E+5	1.50E-0	1.78E+4	7.53E+3	2.43E+4	1.41E+5	1.35E+6	1.35E+4		1.38E+6	1.05E-1	7.59E+3
Component Flow, (MT)																																										7.53E-4	
Al, (MT)	3.37E+3	1.51E+2	3.22E+3		6.80E+1	1.40E+1	4.42E+2	2.97E+1	7.19E+2	8.81E+1	3.85E-1	2.39E+2		1.51E+3			4.73E+3	2.13E-4		3.53E+3	1.19E+3	1.76E-4	3.53E+3			3.53E+3		7.81E-4		8.51E+3	6.09E-3	1.20E+4			1.22E-5	1.20E+3	8.33E-6	7.53E-4				7.29E-6	
Fe, (MT)	6.31E+2		6.31E+2		5.88E+1	1.92E+0	6.99E+1	1.98E+1	3.57E-1	1.28E+1	2.57E+0	1.54E+1		1.67E+2			7.96E+2	2.06E-5		3.42E+1	7.62E+2	1.71E-6	3.42E+1			3.42E+1		7.56E-6			1.73E-5	3.42E+1			1.16E-7	7.63E+2	7.97E-8	7.29E-6				6.26E-5	
Cr, (MT)	2.68E+2	1.12E+1	2.57E+2		7.02E+0	1.07E+0	5.12E+1	8.89E+0	1.19E+1	4.85E+0	1.09E-1	1.62E+1		9.83E+1			3.53E+2	1.77E-5		2.93E+2	5.99E+1	1.46E-5	2.93E+2			2.93E+2		6.49E-5			1.48E-4	2.93E+2			1.01E-6	5.99E+1	6.91E-7	6.26E-5				4.82E-2	4.05E+2
Na, (MT)	5.77E+4	3.35E+3	5.44E+4		5.70E+2	4.86E+2	3.95E+3	2.81E+2	5.05E+3	1.02E+3	1.31E+2	4.49E+3		1.48E+4			6.92E+4	1.36E-2	1.67E+4	8.38E+4	1.59E+3	1.01E-2	8.38E+4		1.05E+3	8.43E+4	5.55E+2	5.13E-2		4.05E+2	4.27E-2	8.44E+4			5.54E-4	2.15E+3	4.65E-4	4.82E-2				3.38E-6	
Si, (MT)	4.60E+2		4.60E+2		1.27E+1	1.17E+1	1.91E+2	6.39E+0	5.23E+0	5.95E-0	3.19E-3	5.98E+0		2.34E+2			6.94E+2	9.53E-7	2.02E+11	1.58E+1	8.98E+2	7.90E-7	1.58E+1			1.58E+1		3.50E-6			1.25E-5	6.30E-2	1.25E+5		4.52E+3	5.46E-8	5.22E+3	3.69E-8	3.38E-6			3.02E-4		
P, (MT)	1.34E+3	3.27E+1	1.51E+3		2.03E+0	1.49E-1	3.48E+1	7.46E+0	1.12E+1	2.27E+1	2.53E+1	8.07E+1		1.36E+2			1.64E+3	1.08E-4		1.48E+3	1.68E+2	7.38E-5	1.48E+3			1.48E+3		4.12E-4			7.49E-4	1.48E+3			5.07E-6	1.68E+2	3.48E-8	3.62E-4				5.55E-2	1.59E+0
NO2- and NO3-, (MT)	1.08E+5	3.62E+3	1.03E+5		5.24E+2	2.77E+1	3.36E+3	3.25E+2	5.58E+3	8.61E+2	1.38E-2	4.62E+3		1.45E+4			1.17E+5	1.57E-2	4.32E+11	1.15E+5	1.88E+3	1.10E-2	1.15E+5		1.46E+3	1.15E+5	1.44E+3	5.96E-2		2.41E+4	1.37E+1			5.61E-4	1.12E-3		5.45E-4	5.55E-2				5.55E-2	1.59E+0
H2O, (MT)	4.04E+5	5.74E+3	3.99E+5		1.02E+4	1.32E+4	4.25E+4	1.72E+4	1.13E+4	4.11E+4	3.92E+3	1.53E+4	3.55E+4	1.10E+5			5.08E+5	3.69E+5	2.62E+4	7.75E+5	1.23E+5	3.39E+5	4.37E+5	9.15E+4	2.95E+3	5.21E+5	9.92E+3	1.20E+6	5.82E+5	6.22E+4	6.40E+4		1.50E+0	1.78E+3	4.00E+2		1.41E+5	1.35E+6	1.35E+4		1.38E+6		2.61E+3
Radionuclides																																											
14C, (Ci)	3.17E+3		3.17E+3		3.51E+2		1.97E+3	1.18E+0	9.29E+0	3.53E+0	3.66E-2	3.56E+0		2.34E+3			5.50E+3	1.98E-4		3.29E+3	2.20E+3	1.64E-4	3.29E+3			3.29E+3		7.29E-4			3.29E+3				2.21E+3		7.68E-6	7.03E-4			Trace	7.03E-4	
60Co, (Ci)																																									Trace		
90Sr+90Y, (Ci)																	1.06E+8	2.22E-1		3.69E+6	1.02E+8	1.84E-1	3.69E+6			3.69E+6		8.14E-1			1.67E+8	3.68E+6			1.25E-2	1.02E+8	8.58E-3	7.88E-1			Trace	7.88E-1	
99Tc, (Ci)	8.13E+7	3.35E+5	8.10E+7		1.67E+7	1.01E+5	3.45E+6	8.79E+4	1.84E+5	3.92E+6		4.25E+6		2.47E+7			3.23E+4	3.10E-3		2.27E+4	9.52E+3	1.13E-3	2.27E+4			2.27E+4		1.00E-2			1.16E-2	2.27E+4			4.87E-3	9.51E+3	2.90E-3	1.10E-2			Trace	1.10E-2	
137Cs+137Ba, (Ci)	1.79E+4	6.87E+3	1.10E+4		2.12E+3		8.40E+3	2.81E+1	2.92E+3	8.82E+2	5.03E+0	7.75E+3		2.12E+4			6.79E+7	8.13E-1		6.16E+7	8.29E+8	3.08E+0	6.16E+7			1.42E+8	6.01E+7	4.78E-1			7.72E-1	1.42E+8			3.03E+1	6.83E+7	1.45E-1	2.88E+0			Trace	2.88E+0	
TRU, (Ci)	1.87E+7	3.12E+6	1.56E+7		1.91E+7	5.90E+5	9.28E+6	1.22E+5	1.78E+7	2.19E+6	9.78E+4	5.41E+6		5.23E+7			2.14E+5	8.87E-4		1.47E+4	1.99E+5	7.38E-4	1.47E+4			1.47E+4		3.28E-3			7.46E-3	1.48E+4			5.01E-5	1.99E+5	3.43E-5	3.15E-3			Trace	3.15E-3	
Total Ci	1.26E+5		1.26E+5		4.80E+4	1.56E+3	2.08E+4	1.34E+4	3.09E+2	3.94E+3	7.28E+2	4.57E+3		8.87E+4			1.74E+8	1.04E+0		6.53E+7	1.08E+8	3.26E+0	6.53E+7			5.15E+6	6.01E+7	1.31E+0			3.29E+3	5.15E+6			2.24E+3	1.69E+8	1.56E-1	3.68E+0			Trace	3.68E+0	
	1.00E+8	3.47E+8	9.67E+7		3.58E+7	8.92E+5	1.27E+7	2.22E+5	1.80E+7	6.10E+6	9.83E+4	9.86E+6		7.72E+7																													
0.62-m3 HLW Canisters																																				15,000							
1.28-m3 HLW Canisters																																				7,300							
32-m3 LLW Containers																																7,800											
5300-m3 LLW Vaults																																46											

2/6/96

ALB203/MAN/6-27-95-6

4.1.2 Separations and Low-Activity Waste Processing System

Tank waste separations consists of sludge/solids leaching/washing and cesium separation from supernatants. Sludge/solids leaching/washing removes by caustic solution (leaching) and water (washing) soluble components (e.g., aluminum, chromium, and phosphate) that would otherwise increase the volume of vitrified HLW. The washed sludges are temporarily stored in DSTs where blending for the HLW vitrification process is conducted (i.e., in-process waste storage sub-system). The wash solutions along with tank waste supernatants are processed to remove cesium before LAW vitrification.

A single-cycle ion exchange process removes the cesium to provide an average cesium DF of 100. The LAW evaporator concentrates the ion exchange effluent before entering the LAW vitrification portion of the facility. Cesium separated from tank wastes is concentrated and temporarily stored in DSTs (i.e., in-process waste storage). Figure 4-2 shows the process steps for the combined separations and LAW vitrification process. The major process systems for this facility are shown in Appendix A, Figure A-2, Process Flow Diagrams (sheets 1 through 23).

4.1.2.1 Separations. Before the start of SST retrieval, supernatants are decanted from DSTs (in-process waste storage) by use of decantation pumps and transferred to the pretreatment process. Supernatants typically are at a density greater than the ion exchange resin and must be diluted to prevent fluidization of the ion exchange resin. Dilution of supernatants that contain a large concentration of aluminum is conducted using dilute caustic solution (e.g., 0.1*M* NaOH) to prevent precipitation of aluminum compounds, otherwise water is used for dilution. Supernatants are diluted to a maximum concentration of 7*M* sodium. After dilution, pumps transfer the supernatant through cross-flow filters to remove entrained solids before cesium ion exchange processing.

After providing sufficient storage capacity by initially processing DST supernatants, waste is retrieved from SSTs to DSTs. Batches of retrieved tank waste are slurry transferred from DSTs to the separations portion of the facility, where the waste slurry is sampled. The waste slurry is pumped through cross-flow filters to separate the liquid fraction (i.e., supernatant). Sludges/solids are collected and leached with 3*M* sodium hydroxide solution, filtered and washed with water to remove dissolved interstitial components. The washed sludges/solids are filtered and slurried to DSTs for interim storage until HLW vitrification is conducted. The sludges/solids leachate and water wash solutions (i.e., supernatants) are concentrated before undergoing cesium ion exchange.

The supernatants pass through the feed evaporator, which increases the ion exchange feed solution to about 7*M* sodium. From the evaporator, pumps transfer the supernatants to the ion exchange columns after feed clarification in a sand filter. This clarification step reduces the chance of entrained solids plugging the ion exchange columns and provides a further decontamination of the supernatant. The entrained solids passing through the ion exchange system could carry addition transuranic and strontium radionuclides to the LAW stream.

Figure 4-2. Process Flow Diagram for Separations and Low-Activity Waste Campaign.

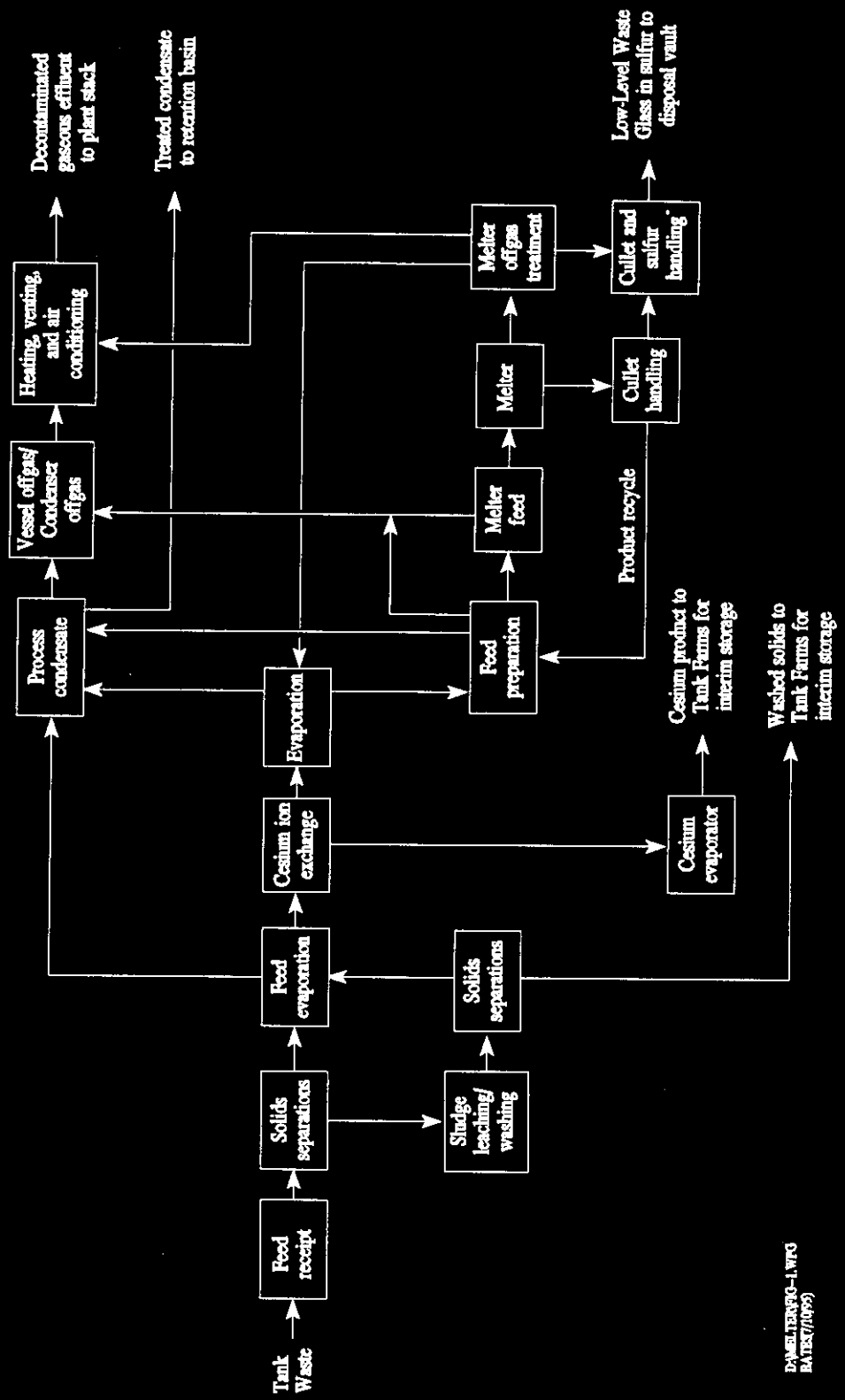

Four ion exchange columns operate as two separate systems designated A and B. After reaching a prescribed cesium breakthrough point on the second column of System A, supernatant processing temporarily stops and the two columns from System B come on line. While System B processes supernatants, the System A columns have the cesium eluted using nitric acid.

Then, sodium hydroxide solutions and wash water are used to convert the resin to the sodium form (i.e., regenerate) in preparation for reuse of the resin. The first set of columns returns to service when the lead column in the other set becomes loaded. The columns are sized to allow this process to operate in a continuous fashion.

4.1.2.2 Low-Activity Waste Vitrification. After separation, the pretreated LAW supernatant transfers to the LAW feed preparation system where the LAW recycle streams mix with the supernatant feed before concentration by the LAW evaporator. Evaporator overheads are condensed and collected in the process liquid waste system for recycle. The evaporator bottoms are sampled, cooled, and adjusted (if necessary) before transfer to the LAW melter feed system.

The liquid melter feed and dry glass formers feed into a combustion melter where the streams combine and melt into glass. The glass exits the melter and enters a quench flume where the glass fractures into cullet. The cullet enters a crusher and then goes to a lag storage area before mixing with a sulfur polymer cement. The cullet/sulfur polymer cement mixture is poured into 32 m^3 steel boxes, which are transported to near surface vaults for disposal.

The LAW melter offgas (MOG) system receives the hot combustion gases from the glass separator section of the melter. Quenching of these offgases by contact with cool scrub water removes most of the entrained particulates and water-soluble contaminants, and condenses much of the water vapor. Excess condensates from the LAW MOG system recycle to the LAW feed preparation system for re-evaporation.

A bleed stream from the condensates from the MOG system is routed to a chloride/fluoride removal system as required. This system separates from the process condensate chloride and fluoride not incorporated into the glass. The removal system distills HCl and HF from the purge stream, neutralizes the removed halides, and grouts the halide purge stream for disposal.

The scrubbed melter offgases cool and pass through successive stages of filtration before flowing to a sulfur dioxide adsorption process and a catalytic de-NO_x reactor and final discharge to the heating, ventilating, and air conditioning (HVAC) system. The recovered sulfur dioxide is converted into elemental sulfur by a Claus unit that discharges its product to a storage tank for use in the sulfur polymer cement mixing.

4.1.3 High-Level Waste Processing

After completing LAW vitrification, the LAW vitrification system is removed and replaced with a HLW vitrification system. The washed solids are combined with the recovered cesium and fed to the HLW vitrification process. The main changes in the facility occur in the area of product handling.

At the completion of the plant conversion, the optimized processing strategy begins processing HLW in 2024. This date allows about 5 years to process the HLW before the Tri-Party Agreement milestone for the completion of tank processing. Equipment for vitrifying HLW is sized to complete this portion of the TWRS mission in 5 years, at 60 percent TOE.

Figure 4-3 shows the process steps for the HLW vitrification process. The major process systems for this process are shown in Appendix A (Sheets 10 through 20).

The sludges return to the SPF from the DSTs. The solids/liquid separations equipment removes the majority of the solution from the feed slurry. The evaporator concentrates the solution so as to reduce the heat load on the melter. The bottoms from the evaporator recombine with the solids and the concentrated slurry goes to the melter feed tank. After condensing, the overheads from the evaporator go to the process condensate system before discharge to the retention basin.

Stored cesium provides the other main tank feed to the HLW process. The cesium blends with the concentrated slurry in the melter feed tanks.

The melter feed system adjusts the chemical composition of the feed and combines the feed with glass formers. This mixture continuously feeds the melter. The melter serves to incorporate the waste into a glass. From the melter, the glass pours into 1.26-m^3 canisters. The package handling system cools the canister, welds the canister shut, decontaminates the canisters, and places the canisters in an overpack. Shipping and receiving places the loaded overpacks on a storage pad to await shipment to the repository.

The HLW MOG system receives the hot combustion gases from the glass melter. Quenching of these offgases by contact with cool scrub water removes most of the entrained particulates and water-soluble contaminants, and condenses much of the water vapor. Excess condensates from the HLW MOG system recycle to the HLW feed preparation system for re-evaporation. The scrubbed melter offgases cool and pass through successive stages of filtration before flowing to a catalytic de-NO_x reactor and final discharge to the HVAC system.

Figure 4-3. Process Block Flow Diagram for High-Level Waste Campaign.

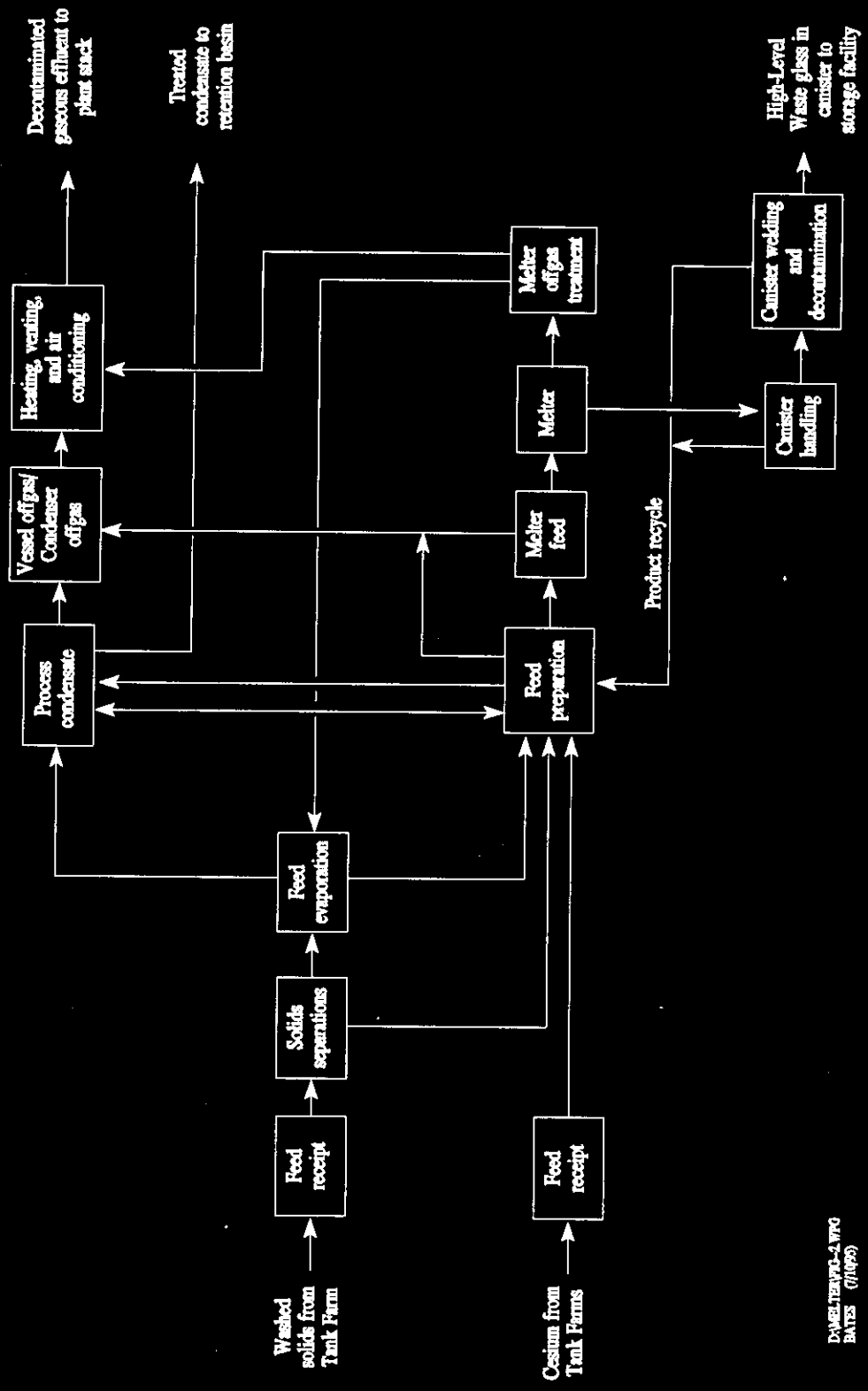

4.2 PROCESS FACILITY DESCRIPTION

The combined separations and vitrification process facility provides the heart of a consolidated TWRS Treatment Complex. The utility and chemical facilities support the operations of the process facility. The arrangement of these buildings and facilities must support the mission of the process facilities. Adjacency issues associated with supporting facilities are discussed under the heading of each of the individual supporting facility. The process facility requires truck access to allow for movement of various sizes of equipment and supplies into and out of them.

The main separations and vitrification processes are contained within a building about 100-m long, 60-m wide, 40-m high above grade, and 15-m below grade. The facility layout drawings (see Appendix B), show the relative position of equipment, cells, and support systems, with associated facility dimensions in plan and cross-section views. The process facility consists of a single aisle facility with adjoining remote maintenance cells. The aisle concept allows moving failed equipment into the maintenance area for repair or replacement. This concept allows replacement of small equipment packages or entire vessels in a relatively short period of time.

Above the aisle area, a limited maintenance area exist that contains many of the process vessels. A flasking system maintains these vessels as necessary and allows replacement of valves, pumps, and other components prone to failure. A major failure of a vessel in this area would require either a termination of use or a major maintenance effort to regain use of the vessel.

4.3 SUPPORT FACILITY DESCRIPTION

Figure 4-4 provides a drawing of a treatment complex consolidated about the SPF. The ancillary areas and structures required to support the operation of the SPF are collectively referred to as "support and infrastructure" and are arranged with respect to the SPF as shown in Figure 4-4.

The support and infrastructure functions associated with the TWRS processing flowsheet have been systematically identified and documented in *Facility Design Philosophy: TWRS Process Support and Infrastructure Definition* (Leach 1995). Utilities and structures have been mapped to the TWRS functional block diagram for "Remediate Tank Waste" to ensure a complete identification of processing support and infrastructure. Subsequently, each support function was assessed for location and process constraints. Specifically, on the bases of safety and operational considerations, it was determined whether support functions should be close coupled with the main processing facility or could otherwise be placed some distance away. It was also determined whether the function could be shared between pretreatment and vitrification or must otherwise be dedicated to each. Finally, opportunities for cost savings and efficiencies were considered through grouping or collocating functions in common structures.

Figure 4-4. Preliminary Site Selection for the Baseline Facilities.

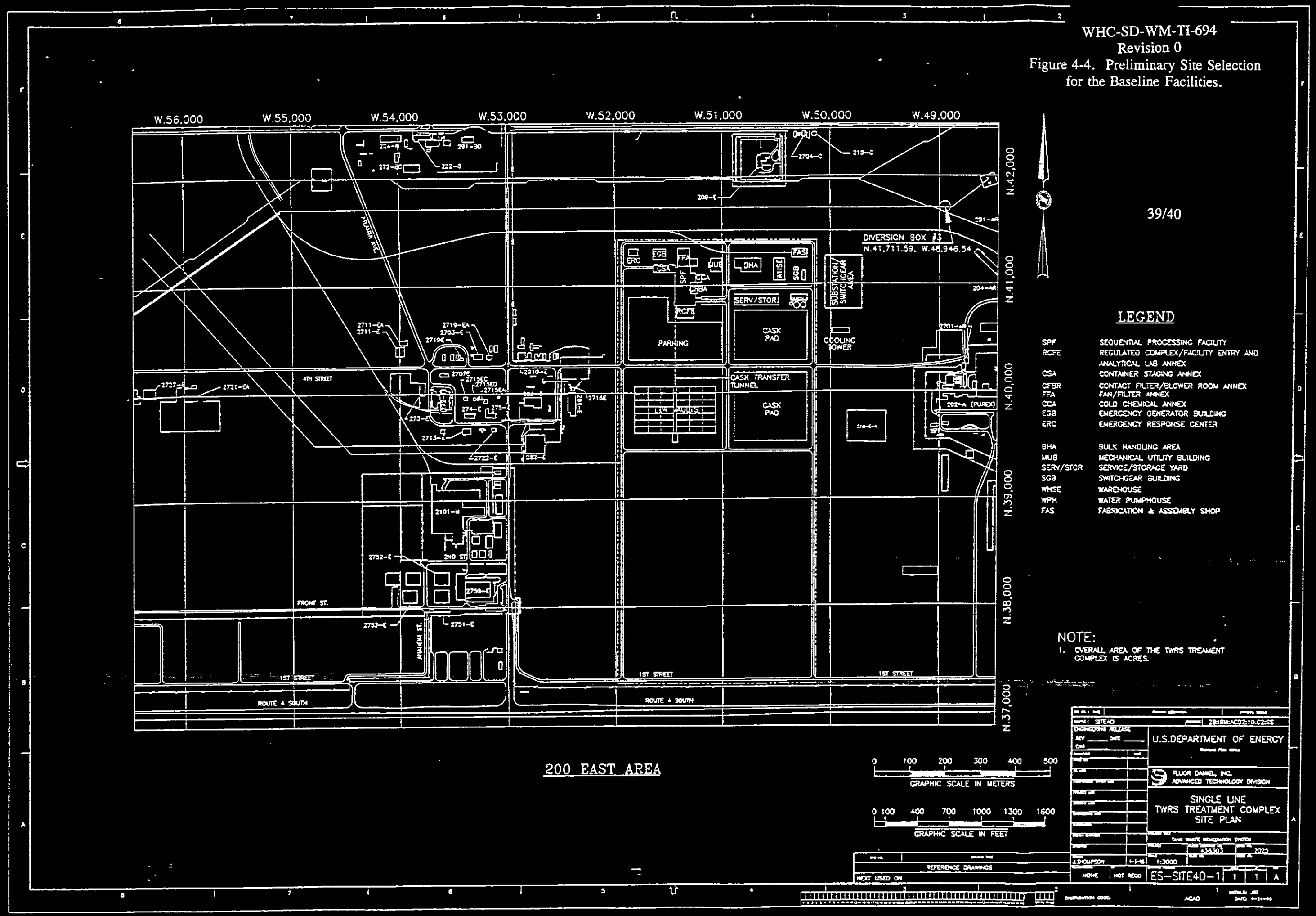

Facility layouts and equipment lists for the support and infrastructure were prepared on the bases of estimates for utility and materials consumption. The optimized processing strategy allows for savings in the area of support and infrastructure when compared to the parallel processing strategy assessed in *Facility Design Philosophy: Tank Waste Remediation System Process Support and Infrastructure Definition* (Leach 1995). This is expected since peak consumption rate of utilities and materials for the parallel processing case is based on the simultaneous operation of the pretreatment, LAW vitrification and HLW vitrification functions.

The support and infrastructure for the SPF was scaled down, where reasonable, on the basis of the reduced consumption rate and staffing levels. Savings were also realized over the base case by assuming the availability of office space outside of the TWRS Treatment Complex for personnel not directly involved with the day-to-day physical operations of the treatment complex.

The elements of the initial SPF capital cost estimate that comprise the processing support and infrastructure ($170 million direct cost, Table 2-2) include the following:

- Interim storage pads for the HLW glass product
- LAW glass product transfer tunnel to LAW vaults
- 6 LAW vaults
- Site preparation and upgrades for the TWRS Treatment Complex: e.g., clearing, grading, roads, fencing, utility tie-ins, parking area, etc.
- Cooling tower
- Electrical substation/switchgear area and switchgear building
- Mechanical Utilities Building (MUB)
- Emergency Response Center (ERC) and Emergency Generator Building
- Bulk Materials Handling Area (BHA)
- Service/storage yard
- Fabrication and Assembly Shop (FAS)
- Water Pumphouse (WPH)
- Warehouse.

Certain support functions that were identified to be close-coupled with the SPF were arranged as annexes to the main process building. Annexing saves costs over the option to construct multiple stand alone facilities. The site layout shown in Figure 4-4 maximizes the use of annexes while recognizing the practical restrictions to annexing too many of the support functions. Annexed support functions are NOT included in the support facilities cost reflected in Table 2-2. Instead, these costs are included in the SPF cost. The functions are shown as the following in Figure 4-4:

- Container Staging Annex (CSA)
- Fan/Filter Annex (FFA)
- Cold Chemical Annex (CCA)
- Contact Filter/Blower Annex (CFBA)
- Regulated Complex/Facility Entry (RCFE) and Analytical Lab Annex.

Additional information on the individual support functions is included in Appendix B.

4.4 SITE LOCATION

The outlined rectangular area shown in Figure 4-4 has been assumed in this study for the location of the TWRS Treatment Complex. This area was also the preferred location in *Facility Design Philosophy: Tank Waste Remediation System Process Support and Infrastructure Definition* (Leach 1995) for the parallel processing scheme. The marked area is approximately 89 hectares. It is situated north of Route 4 South and between Baltimore Avenue and the PUREX Plant. There is road access from the existing Hanford Site road system and close proximity on the north to the planned Replacement Cross Site Transfer System.

The TWRS Treatment Complex, as shown in Figure 4-4, occupies less than half of the available area and collocates most of the functions necessary to support a self-contained processing and storage mission. A premium is placed on collocation to support efficient use of land mission attainment. The arrangement of the facilities and areas on the site considers the efficient movement of materials and personnel, as well as the efficient supply of utilities. Structures are placed on the north end of the site to be near the cross-site transfer lines and the existing rail line. The switchgear building is located on the east side to be near the electrical supply system while the water pumphouse is located on the west side to be near the supply tie-in points. The area to the south of the HLW interim storage pad and LAW vaults is available for construction laydown. Additional site location considerations are discussed in Appendix B.

5.0 COST ESTIMATES

This chapter provides a summary of the cost estimates prepared for the SPF and the TWRS cost with the SPF. The cost estimates include the TWRS life-cycle cost, initial capital cost for the SPF, melter line conversion cost for the SPF, operating cost for the SPF, HLW repository disposal cost, and costs for the remainder of the TWRS. Appendices contain more detail for the cost basis.

5.1 TANK WASTE REMEDIATION SYSTEM LIFE-CYCLE COST

This section provides a summary of the costs associated with implementation of the TWRS mission using the SPF concept. The costs considered include (1) initial capital cost, (2) cost of melter line conversion (from LAW to HLW processing), (3) Operating Costs, (4) HLW Disposal costs, and (5) costs for the remainder of the TWRS. Table 5-1 provides a summary of the TWRS life-cycle cost for the optimized processing strategy escalated in a fashion consistent with the MYWP. Figure 5-1 shows the basis for life-cycle cost estimates. The following sections of this chapter discuss the life-cycle cost elements in more detail.

Table 5-1. Life-Cycle Cost Summary.

Cost element		
	Optimized processing strategy	Optimized processing strategy with demo phase
Program management	1.0	1.0
Operations and maintenance	1.8	2.9
Tank safety	0.2	0.2
Characterization	0.6	0.6
Disposal Program		
Retrieval	4.4	5.0
Facility (total project cost)	2.0	2.6
Facility operating cost	3.8	3.8
High-level waste disposal	1.8	1.8
Total	15.6	17.9

Figure 5-1. Basis for Life-Cycle Cost Estimates.

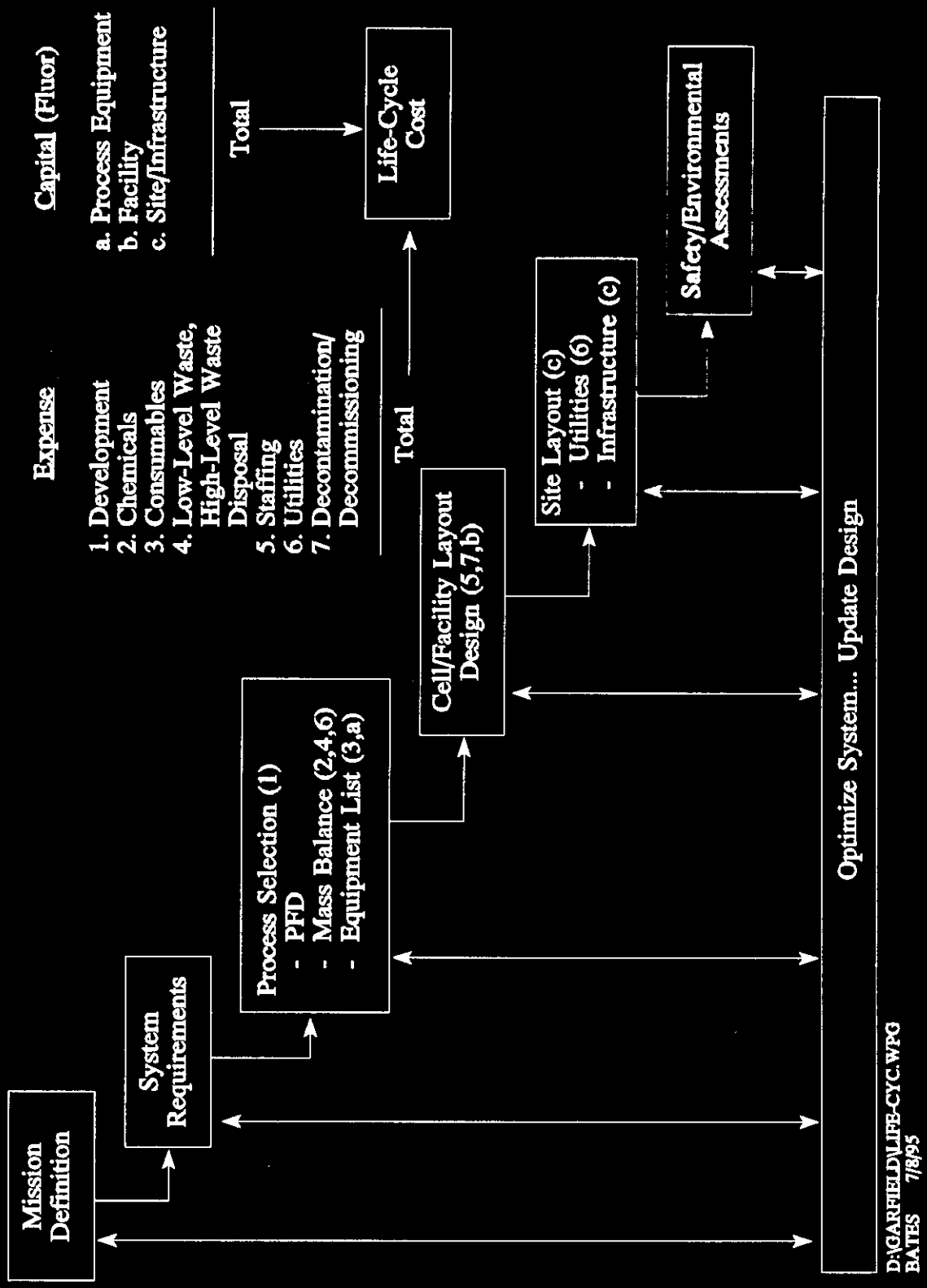

5.2 LIFE-CYCLE COST METHODOLOGY

Life-cycle costs are derived from the design media generated for the SPF as shown in Figure 5-1. Capital and expense costs for the life of the mission are derived from the Process Flow Diagram (PFD) and the related mass balance run on ASPEN software. These provide a basis for the process equipment list, design layouts, and site layouts.

Capital costs were estimated by Fluor Daniel, Inc., for process equipment, facility, and the site/infrastructure elements. The expense costs were developed by WHC from specific elements of the design media as depicted on Figure 5-1. Thus, the life-cycle costs are directly traceable to specific elements of the design included in this document.

The ancillary areas and structures required to support the operation of the SPF are collectively referred to as "support and infrastructure" and are arranged with respect to the SPF in a site layout.

The support and infrastructure functions associated with the TWRS processing flowsheet have been systematically identified and documented in *Facility Design Philosophy: TWRS Process Support and Infrastructure Definition* (Leach 1995). Utilities and structures have been mapped to the TWRS functional block diagram for "Remediate Tank Waste" to ensure a complete identification of processing support and infrastructure. Subsequently, each support function was assessed for location and process constraints. Specifically, on the bases of safety and operational considerations, it was determined whether support functions should be close coupled with the main processing facility or could otherwise be placed some distance away. It was also determined whether the function could be shared between pretreatment and vitrification or must otherwise be dedicated to each. Finally, opportunities for cost savings and efficiencies were considered through grouping or collocating functions in common structures.

5.3 INITIAL CAPITAL COST

The initial capital cost for the SPF has a Total Project Cost (TPC) of about $2.0 billion. The TPC consists of the TEC for the facility ($1,450 million) and the Other Project Costs (OPC) ($555 million). The TEC includes the costs for acquisition of the facility's civil and structural elements and equipment in the facility. The OPC includes the cost not related to the facility construction necessary to bring the facility on line. These other costs include development and start-up costs for the project.

5.3.1 Total Estimated Cost

The process and support buildings have an estimated cost of $1,450 million for the facility, in 1995 dollars. The estimate includes engineering, construction management, program management, and contingency. Table 5-2 shows the revised cost estimate breakdown.

Table 5-2. Initial Capital Cost Estimate for the Sequential Processing Facility in Millions of 1995 Dollars.

Cost element[a]		Cost
Vitrification civil and structural		138.3
Equipment		
Vitrification Facility		
Building equipment		117.8
Process equipment		200.6
Support facilities		170.1
Total Direct Cost (DC)		626.8
Engineering (E)	at 40 Percent	250.7
Construction Management (CM)	at 10 Percent	62.3
Project Management (PM)	at 10 Percent	94.0
Contingency (C)	at 40 Percent	413.7
Total Estimated Cost (TEC) (rounded)		1,450

[a]The buildup for the TEC comes from the following relationships: CM = 0.1 * DC, E = 0.4 * DC, PM = 0.1 * (DC + CM + E), C = 0.4 * (DC + CM + E + PM), TEC = DC + CM + E + PM + C.

Fluor-Daniel, Inc., prepared the facility layouts and equipment lists for the WHC. The WHC reduced the original facility cost estimate prepared by Fluor-Daniel Inc. by $85 million. This reduction reflects the findings from an independent cost estimate conducted by Stone and Webster (contained in Appendix D).

The TEC estimate for the SPF comes from a FAST-C parametric estimate for the building based on the layout drawing and a equipment list for the major process equipment. Appendix B contains the facility drawings. Appendix C contains the equipment list. A summary of the capital cost estimate is given in Appendix D.

The TEC estimate for the support facilities comes from a equipment list of the major support equipment and scaling of the facilities from the Key Decision Zero for Project W-378. Appendix C contains the equipment list. Appendix D contains a summary of the cost estimate.

5.3.2 Other Project Costs

The OPC totals about $555 million dollars. The development, start-up, and escalation costs comprise the main part of the OPC. The DOE includes the development and start-up cost as part of the total project cost to allow one funding source to provide all the necessary resources for a project. Normally the escalation is included as part of the TEC, but for this study escalation includes both TEC dollars as well as OPC dollars.

The development costs totals about $180 million in unescalated dollars. The three main process systems (separations, LAW vitrification and HLW vitrification) each require research and development (R&D). The optimized processing strategy scales down the R&D costs from the MYWP because the optimized processing strategy does not explore all of the alternatives embodied in the baseline. These reduced costs R&D activities are as follows:

- Separations R&D = $40 million
- LAW Vitrification R&D = $140 million
- HLW Vitrification R&D = $125 million.

In addition, the optimized processing strategy defers the HLW R&D costs until after 2009. This deferral moves the HLW R&D from the OPC estimate to the melter conversion estimate. Startup of the HLW vitrification system following melter line conversion is included in the conversion costs (Section 5.3).

The initial startup cost for the SPF has been set to the equivalent of 3 years of operating staff. This allocation results in a cost of about $175 million for the initial startup of the SPF in unescalated dollars. The start-up cost for a facility includes such items as the staff training, acceptance testing, permit preparation, and safety documentation. This work begins 5 years before the start-up of the facilities and has an assumed cost of 3 years of the LAW facility staff cost.

The escalation totals about $200 million. The escalation included in the optimized processing strategy uses a technique consistent with the escalation found in the MYWP. The MYWP escalated for the first 6 years at a rate of about 3 percent. From the seventh year the dollars did not escalated, but used the escalation calculated for the sixth year of the MYWP. This escalation had the impact of increasing the cost of the MYWP on average by about 20 percent over constant fiscal year 1995 dollars.

5.4 MELTER LINE CONVERSION COST

As the process mission changes from LAW vitrification to HLW vitrification, certain facility modifications must occur. The facility's design accommodates these changes as efficiently as possible. It is anticipated that some facility staff will be dedicated to early planning and subsequent implementation of the melter line conversion effort. The replacement of the product handling equipment represents the largest equipment change needed. Table 5-3 summarizes the melter equipment and start-up conversion costs. Escalation assumes a 20 percent increase as defined in Section 5.3.2.

Table 5-3. Melter Line Conversion Cost
(Millions of 1995 Dollars Except Where Noted).

Cost element	Cost
Research and development	125
Equipment removal	6
Equipment replacement	67
Waste disposal	10
Startup	31
Total unescalated	239
Total escalated	287

The conversion cost includes the identified cost from Fluor-Daniel Inc., development cost for HLW, staff for the transition, start-up cost, and LAW equipment removal and disposal. The equipment cost includes process vessels, canister handling, and laboratory equipment necessary to support the HLW campaign. Also included is the research and development cost for the HLW vitrification process as identified in Section 5.3.2.

This strategy leaves in place all LAW equipment not needed for HLW vitrification as long as it does not interfere with HLW processing. Furthermore, tankage, evaporators and other equipment will be sized to accommodate the operation (LAW or HLW) requiring the greatest capacity and operating limits will be changed to meet processing needs.

5.5 OPERATING COSTS

The operating costs consist of four main cost elements: development and startup, staff, consumables, and D&D costs. An operating cost summary is provided in Table 5-4. The details of these costs are provided in Appendix F. Escalation assumes a 20 percent increase as defined in Section 5.3.2.

Table 5-4. Operating Cost Summary
(Millions of 1995 Dollars Except Where Noted).

Cost element	Cost
Staff	1,291
Consumables	1,112
Decontamination and decommissioning	483
Total unescalated	2,886
Total escalated	3,463

5.5.1 Staff Cost

The SPF has two distinct campaigns where each requires staff tailored to the needs of the campaign. The first operating campaign (separations and LAW vitrification) takes about 18 years to process the waste and requires the staffing levels shown in Table 5-5. The second operating campaign (HLW vitrification) takes about 5 years to process the waste and requires the staffing levels shown in Table 5-6. Appendix F contains breakdowns of both staffing estimates.

The annual cost for staff includes $130,000 per exempt full time employee (FTE), $90,000 per bargaining FTE, and $60,000 per non-exempt FTE. These rates include all of the overheads for maintaining an FTE and providing support from all of site services. The total staff cost for the LAW processing campaign based on Table 5-5 and an 18-year operating campaign is $1,038 million. The total staff cost for the HLW processing campaign based on Table 5-6 and a 5-year operating campaign is $253 million.

Table 5-5. Single Line Melter Yearly Facility Staff and Cost for Low-Activity Waste Processing Campaign.

Staff element	Full Time Employees				Millions of 1995 Dollars			
	Exempt	Nonexempt	Bargaining Unit	Total	Exempt	Nonexempt	Bargaining Unit	Total
Plant support	79	19	88	186	10.27	1.14	7.92	19.33
Engineering	48	12	0	60	6.24	0.72	0.00	6.96
Operations	46	11	83	140	5.98	0.66	7.47	14.11
Maintenance	26	4	110	140	3.38	0.24	9.90	13.52
Indirect support	29	0	0	29	3.77	0.00	0.00	3.77
Total	228	46	281	555	29.64	2.76	25.29	57.69

Table 5-6. Single Line Melter Yearly Facility Staff and Cost for High-Level Waste Processing Campaign.

Staff element	Full Time Employees				Millions of 1995 Dollars			
	Exempt	Nonexempt	Bargaining Unit	Total	Exempt	Nonexempt	Bargaining Unit	Total
Plant support	67	19	72	158	8.71	1.14	6.48	16.33
Engineering	47	11	0	58	6.11	0.66	0.00	6.77
Operations	39	15	62	116	5.07	0.90	5.58	11.55
Maintenance	26	5	108	139	3.38	0.30	9.72	13.40
Indirect support	20	0	0	20	2.60	0.00	0.00	2.60
Total	199	50	242	491	25.87	3.00	21.78	50.65

5.5.2 Consumable Costs

The consumable costs for the SPF are summarized in Table 5-7 and consist of the following cost elements:

1. **LAW Containers and Vaults.** This cost includes the purchase of containers and construction and closure of the LAW storage vaults. At 32 m^3 a container, approximately 7,630 will be needed (244,000 m^3/32 m^3). The cost for each container is about $18,000 ($132 million total). The required vaults can be constructed and closed for a total of approximately $3 million each. It is assumed that 196 32 m^3 containers will be disposed of per vault (39 total). Since six vaults are built during the construction phase of the facility and are accounted for in the capital cost the operating cost for vaults is $99 million.

2. **HLW Containers and Storage Pads.** This cost is associated with packaging and interim storage of the HLW glass. It is assumed that the glass produced will be packaged in canisters ($10,000 per canister), four canisters will be packaged in an overpack container ($25,000 per container) for interim storage on a HLW storage pad ($13 million per pad with two pads required). Each container is then placed in a shipping cask ($60,000 per cask) for transportation to the HLW repository. A total of 7,250 HLW canisters will be produced.

3. **Chemicals and Utilities.** This is the cost for chemicals, steam, water and electricity used to operate the facilities based on the process material balance. These values are calculated in Appendix F.

4. **Spares and Equipment.** Assumes $9 million and $5 million per year for the LAW and HLW campaigns respectively. This cost provides for the periodic replacement of equipment from normal deterioration and failure. Also, included in the cost is the cost associated with the disposition of failed equipment that would be categorized as mixed waste.

Table 5-7. Single Line Melter Facility Consumable Costs (Millions of 1995 Dollars).

Operating campaign	Low-activity waste containers and vaults	High-level waste containers and pads	Chemicals	Utilities	Spares and equipment	Total
Low-activity waste	236	0	127	177	162	702
High-level waste	0	253	8	123	25	409
Total	236	253	135	300	187	1,111

5.5.3 Decontamination and Decommissioning Costs

An allocation for the D&D cost of the SPF has been included in the optimized processing strategy life-cycle cost. The allocation includes the sufficient funds to remove radionuclides and equipment as necessary to allow the transition of the facility from EM-30 to EM-60. The allocation was approximated by assigning a cost equal to 30 percent of the TEC for the vitrification facility only (Appendix F) plus the equivalent of 3 years of HLW operating staff costs. Therefore, the D&D costs are approximated as follows:

Facility TEC	= ($1,100 million) x 0.30	= $330 million.
Operating staff cost	= 3 years x $51 million	= $153 million
Total D&D cost	= $330 million + $153 million	= $483 million.

These dollars are spread over the 5 years following operation of the HLW vitrification campaign.

5.6 HIGH-LEVEL WASTE DISPOSAL COSTS

The costs and basis associated with disposal of the HLW produced is given in Table 5-8. The repository disposal fee used in the optimized processing strategy totals $1.5 billion in 1995 dollars, which becomes $1.8 billion when escalated consistent with MYWP. This 1995 value comes from information provided to DOE-EM from DOE-RW (DOE-RW 1993). The DOE-RW has provided more information recently (DOE-RW 1995), but information consistent with the MYWP has not yet arrived (i.e., Hanford's share for a single repository case).

Table 5-8. High-Level Waste Repository Cost Basis.

Disposal input parameter	Value
High-level waste volume (m^3)	9,100
Canister basis	68 cm x 457 cm canister with a net volume of 1.26 m^3 of glass
Number of canisters	7,250
Number of overpacks	1,810
Disposal cost ($ billion)*	1.8

*Single repository cost; a two repository case may cost up to $4.8 billion.

The new information from DOE-RW suggests Hanford's waste disposal cost for a two repository case may increase to between $4 and $5 billion. A repository disposal fee of $4 billion would escalate to $4.8 billion. This cost would significantly increase the portion of the operating cost for repository disposal (from less than 20 percent to greater than 30 percent).

This new pricing does not impact the decision for simple separations because the volume of material shipped to the repository has a small impact on the overall DOE cost. The recent communication with RW indicate that a large reduction in the amount of waste shipped to the repository would only reduce the cost by $500 million for a two repository case.

5.7 OTHER TANK WASTE REMEDIATION SYSTEM PROGRAM COSTS

To implement any waste disposal concept, support is required from a number of program elements, of which the SPF represents one program element. The other TWRS program elements that must be accounted for in a life-cycle cost analysis are given in Table 5-9. The costs for program management, maintenance and operations, safety, characterization, and upgrades come from the guidance budget provided for fiscal year 1996 activity data sheet preparation (contained in Appendix F) and a modified MYWP. In addition to those two sources, the retrieval cost incorporates a sluice based strategy.

Table 5-9. Tank Waste Remediation System Program Cost Required To Implement the Optimized Processing Strategy.

Program element	Cost (Billions of escalated dollars)
Program management	1.0
Operations and maintenance	1.8
Safety	0.2
Characterization	0.6
Retrieval	4.4
Total	8.0

5.8 DEMONSTRATION PHASE COSTS

The demonstration facility's cost is approximately $300 million for a LAW-only mission at 15 MT/day of glass processing rate. OPC of $300 million are assumed to account for the development, escalation, start-up, and D&D of the facility. These costs increase the total project cost for the program by $600 million.

It is assumed that the presence of a demonstration phase will not affect the operating cost of the facility or the HLW disposal fee. Therefore these values will not be increased for the demonstration phase case.

The other TWRS program elements that must be accounted for in a life-cycle cost analysis are given in Table 5-10. The costs for program management, maintenance and operations, safety, and characterization come from the guidance budget provided for fiscal year 1996 activity data sheet preparation (contained in Appendix F) and a modified MYWP. The differences between the values in Table 5-10 and 5-9 are as follows. Operations and maintenance increases by $1.1 billion due to the extended tank farm operating time ($175 million/year for 5 years, plus the necessary site and infrastructure impacts ($150 million) and escalation ($100 million). The change in the retrieval schedule increases the cost by an additional $600 million.

Table 5-10. Tank Waste Remediation System Program Cost Required To Implement the Optimized Processing Strategy With a Demonstration Phase.

Program element	Cost (Billions of escalated dollars)
Program management	1.0
Operations and maintenance	2.9
Safety	0.2
Characterization	0.6
Retrieval	5.0
Total	9.7

6.0 REFERENCES

DOE, 1988, *Final Environmental Impact Statement for the Disposal of Hanford Defense High-Level, Transuranic and Tank Wastes, Hanford Site, Richland, Washington: Record of Decision*, Federal Register, Vol. 52, pp 12449-12453, DOE/EIS-0113, vol. II, p B.6, U.S. Department of Energy, Washington, D.C.

DOE, 1993, *Justification of Mission Need Tank Waste Remediation System*, U.S. Department of Energy, Washington, D.C.

DOE, 1994a, draft, *Tank Waste Remediation System Functions and Requirements*, DOE/RL-92-60, Rev. 1, U.S. Department of Energy, Richland, Washington.

DOE, 1994b, *Waste Acceptance System Requirements Document (WASRD)*, DOE/RW-0351P, Rev. 1, U.S. Department of Energy Office of Civilian Radioactive Waste Management, Washington, D. C.

DOE, 1995a, draft, *Tank Waste Remediation System Technical Requirements Specifications*, DOE/RL-95-14, Rev. 0, U.S. Department of Energy, Richland, Washington.

DOE, 1995b, *Multi-Function Waste Tank Facility - Project W-236A Decision Paper*, memorandum 95-TOP-027 (March 17, 1995), from J. E. Kinzer, Assistant Manager Tank Waste Remediation to President Westinghouse Hanford Company, U.S. Department of Energy, Richland, Washington.

DOE-RW, 1993, *Estimates for the Disposal of Hanford Single-Shell Tank Waste in a Geologic Repository*, memorandum (July 13, 1993) from H. H. Brandt, Director Program Control and Administration Division, U.S. Department of Energy Office of Civilian Radioactive Waste Management to J. Tseng, Acting Director Tank Waste Remediation System Division, U.S. Department of Energy Office of Waste Management, U.S. Department of Energy, Washington, D.C.

DOE-RW, 1995, *Assessment of Pre-Closure System Cost and Health and Safety Impacts of Hanford High-Level Waste Vitrification Options on the Civilian Radioactive Waste Management System*, A00000000-01717-5705-00003, Rev. 0, WBS: 9.2.1.1.3, U.S. Department of Energy, Office of Civilian Radioactive Waste Management, Washington, D.C.

Ecology, EPA, and DOE, 1994, *Hanford Federal Facility Agreement and Consent Order*, as amended, Washington State Department of Ecology, U.S. Environmental Protection Agency, and U.S. Department of Energy, Olympia, Washington.

Gasper, K. A., 1995, *Cost Benefit and Risk Assessment for Selected Tank Waste Process Testing Alternatives*, WHC-SD-WM-ES-337, Rev. 0, Westinghouse Hanford Company, Richland, Washington.

Jensen, R. D., 1994, *Enhanced Sludge Washing Evaluation Plan*, WHC-EP-0805, Westinghouse Hanford Company, Richland, Washington.

Johnson, M. E., 1995, *Tank Waste Remediation System Operational Scenario,* WHC-EP-0856, Rev. 0, Westinghouse Hanford Company, Richland, Washington.

Krieg, S. A., W. W. Jenkins, K. J. Leist, K. G. Squires, and J. F. Thompson, 1990, *Single-Shell Tank Waste Retrieval Study*, WHC-EP-0352, Westinghouse Hanford Company, Richland, Washington

Leach, C. E., 1995, *Facility Design Philosophy: Tank Waste Remediation System Process Support and Infrastructure Definition*, WHC-SD-W378-ES-002, Rev. 0, Westinghouse Hanford Company, Richland, Washington.

Orme, R. M., 1995, *TWRS Process Flowsheet*, WHC-SD-WM-TI-613, Rev. 1, Westinghouse Hanford Company, Richland, Washington.

Raytheon/BNFL, 1994a, *Initial Pretreatment Module Trade Studies: Sludge Washing*, E/B-SD-W236B-RPT-021, Raytheon/BNFL, Richland, Washington.

Raytheon/BNFL, 1994b, *Initial Pretreatment Module Trade Studies: In-Tank Radionuclide Separation*, E/B-SD-W236B-RPT-018, Raytheon/BNFL, Richland, Washington.

Raytheon/BNFL, 1994c, *Initial Pretreatment Module Trade Studies: Out-Of-Tank Radionuclide Separation*, E/B-SD-W236B-RPT-023, Raytheon/BNFL, Richland, Washington.

Shord, A. L., 1995, *Tank Waste Remediation System Site Evaluation Report*, WHC-SD-WM-SE-021, Rev. 0, Westinghouse Hanford Company, Richland Washington.

Slaathaug, E. J., 1996, *Tank Waste Remediation System Optimized Processing Strategy Alternative with an Altered Treatment Scheme*, WHC-SD-WM-TI-737, Rev. 0, Westinghouse Hanford Company, Richland, Washington.

WHC, 1993, *Hanford Site Tank Farm Facilities Interim Safety Basis, volume 2: Design Description*, WHC-SD-WM-ISB-001, Rev. 0, Westinghouse Hanford Company, Richland, Washington.

WHC, 1994a, *Tank Waste Remediation System Multi-Year Work Plan*, WHC-SP-1101, Rev. 0, Westinghouse Hanford Company, Richland, Washington.

WHC, 1994b, *Waste Tank Summary for Month Ending July 31, 1994*, B. M. Hanlon, WHC-EP-0182-76, page E-6 and E-7, Westinghouse Hanford Company, Richland Washington.

WHC, 1995, *Tank Waste Remediation System Fiscal Year 1996 Multi-Year Work Plan, W.B.S.1.1,* WHC-SP-1101, Rev. 1, Westinghouse Hanford Company, Richland, Washington.

This page intentionally left blank.

APPENDIX A

PROCESS DESCRIPTION

Figure A-1 provides a summary material balance. In Section A3.0, Figure A-2 shows the sequential process facility flow diagram, including separations, low-level waste (LLW) vitrification, and high-level waste (HLW) vitrification.

A1.0 PROCESS DESCRIPTION FOR SEPARATIONS AND LOW-LEVEL WASTE

A1.1 PRETREAT WASTE

The waste pretreatment portion of the combined pretreatment and vitrification facility is described in this section. The following process systems are included in this portion of the facility:

- Waste Receipt
- Sludge Washing
- Supernatant Concentration
- Polishing Filtration
- Cesium Ion Exchange
- HLW Evaporation
- LLW Evaporation.

A1.1.1 Waste Receipt

The retrieved tank wastes (Stream #100) are collected in the Receipt/Sample Tanks (TK-131 A, B, and C). Each of these three tanks provide 380 stere of storage capacity. The contents of each tank are sampled before they are pumped (P-132-1) to the sludge washing process (TK-132).

This page intentionally left blank.

Figure A-1. Tank Waste Remediation System Top-Level Flow Diagram.

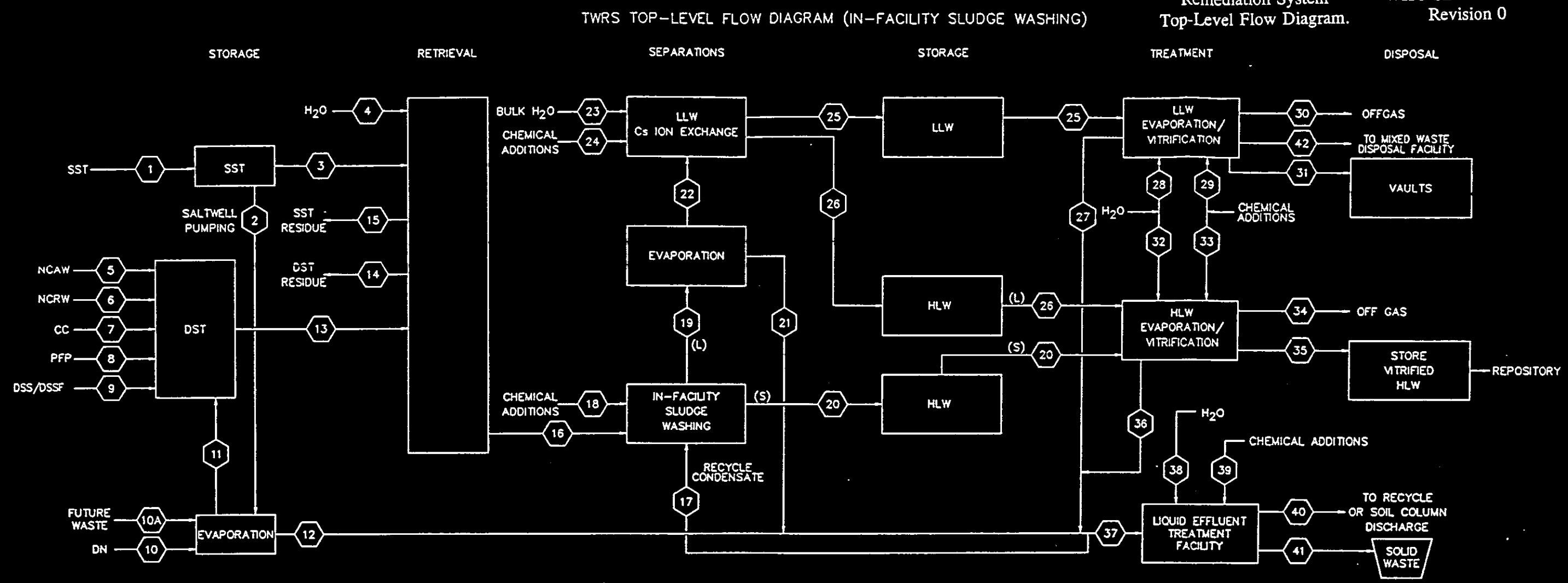

TWRS Sequential Processing Alternative Flowsheet - Top-Level Material Balance

STREAM NUMBER	1	2	3	4	5	6	7	8	9	10	10A	11	12	13	14	15	16	17	18	19	20	21	22	23	24	25	26	27	28	29	30	31	32	33	34	35	36	37	38	39	40	41	42
Total Mass Flow, (MT)	6.04E+5	1.40E+4	5.90E+5		1.22E+4	1.48E+4	5.59E+4	1.63E+4	2.78E+4	4.42E+4	4.38E+3	2.71E+4	3.33E+4	1.56E+5			7.46E+5	3.69E+5	5.65E+4	1.03E+6	1.41E+5	3.39E+5	6.87E+5	9.15E+4	7.03E+3	7.72E+5	1.18E+4	1.20E+6	5.82E+5	4.66E+6	4.14E+6	5.96E+5	1.50E+0	1.78E+4	7.53E+3	2.43E+4	1.41E+5	1.35E+6	1.35E+4		1.36E+6	1.05E-1	7.59E+3
Component Flow, (MT)																																											
Al, (MT)	3.37E+3	1.51E+2	3.22E+3		6.60E+1	1.40E+1	4.42E+2	2.97E+1	7.19E+2	8.81E+1	3.85E-1	2.39E+2		1.51E+3			4.73E+3	2.13E-4		3.53E+3	1.19E+3	1.76E-4	3.53E+3			3.53E+3		7.81E-4		8.51E+3	6.09E-3	1.20E+4			1.22E-5	1.20E+3	8.33E-6	7.53E-4				7.53E-4	
Fe, (MT)	6.31E+2		6.31E+2		5.88E+1	1.92E+0	6.99E+1	1.98E+1	5.57E-1	1.28E+1	2.57E+0	1.54E+1		1.67E+2			7.96E+2	2.06E-6		3.42E+1	7.62E+2	1.71E-6	3.42E+1			3.42E+1		7.56E-6			1.73E-5	3.42E+1			1.16E-7	7.63E+2	7.97E-6	7.29E-6				7.29E-6	
Cr, (MT)	2.68E+2	1.12E+1	2.57E+2		7.02E+0	1.07E+0	5.12E+1	8.09E+0	1.19E+1	4.85E+0	1.09E-1	1.62E+1		9.63E+1			3.53E+2	1.77E-5		2.93E+2	3.99E+1	1.46E-5	2.93E+2			2.93E+2		6.49E-5			1.48E-4	2.93E+2			1.01E-6	5.99E+1	6.91E-7	6.26E-5				6.26E-5	
Na, (MT)	5.77E+4	3.35E+3	5.44E+4		5.78E+2	4.66E+2	3.95E+3	2.81E+2	5.05E+3	1.02E+3	1.31E+2	4.49E+3		1.48E+4			6.92E+4	1.36E-2	1.62E+4	8.38E+4	1.59E+3	1.01E-2	8.38E+4		1.05E+3	8.43E+4	5.55E+2	5.13E-2		4.05E+2	4.27E-2	8.44E+4			3.54E-4	2.15E+3	4.65E-4	4.82E-2				4.82E-2	4.05E+2
Si, (MT)	4.60E+2		4.60E+2		1.27E+1	1.17E+1	1.91E+2	6.39E+0	5.23E+0	5.95E+0	3.19E-3	5.96E+0		2.34E+2			6.94E+2	9.53E-7	2.02E+1	1.58E+1	6.94E+2	7.90E-7	1.58E+1			1.58E+1		3.50E-6		1.25E+5	6.30E-2	1.25E+5		4.52E+3	5.46E-6	5.22E+3	3.69E-8	3.38E-6				3.38E-6	
P, (MT)	1.54E+3	3.27E+1	1.51E+3		2.03E+0	1.49E-1	3.46E+1	7.46E+0	1.12E+1	2.77E+1	2.53E+1	8.07E+1		1.35E+2			1.64E+3	1.08E-4		1.48E+3	1.68E+2	7.38E-5	1.48E+3			1.48E+3		4.12E-4			7.49E-4	1.48E+3			5.07E-6	1.66E+2	3.48E-8	3.62E-4				3.62E-4	
NO2- and NO3-, (MT)	1.06E+5	3.62E-3	1.03E+5		5.24E+2	2.77E+1	3.38E+3	3.25E+2	5.56E+3	8.81E+2	1.38E+2	4.62E+3		1.45E+4			1.17E+5	1.57E-2	4.32E+1	1.15E+5	1.88E+3	1.10E-2	1.15E+5		1.46E+3	1.15E+5	1.44E+3	5.96E-2		2.41E+4	1.37E+1			3.61E-4	1.12E-3		5.45E-4	5.55E-2				5.55E-2	1.59E+0
H2O, (MT)	4.04E+5	5.74E+3	3.99E+5		1.02E+4	1.32E+4	4.25E+4	1.72E+4	1.13E+4	4.11E+4	3.92E+3	1.53E+4	3.33E+4	1.10E+5			5.08E+5	3.69E+5	2.82E+4	7.76E+5	1.25E+5	3.39E+5	4.37E+5	9.15E+4	2.95E-3	5.21E+5	9.92E+3	1.20E+6	5.82E+5	6.22E+4	6.40E+4		1.50E+0	1.78E+3	4.00E+2		1.41E+5	1.35E+6	1.35E+4		1.36E+6		2.63E+3
Radionuclides																																											
14C, (Ci)	3.17E+3		3.17E+3		3.51E+2		1.97E+3	1.18E+0	9.29E+0	3.53E+0	3.66E-2	3.56E+0		2.34E+3			5.50E+3	1.98E-4		3.29E+3	2.20E+3	1.64E-4	3.29E+3			3.29E+3		7.29E-4			3.29E+3				2.21E+3		7.68E-6	7.03E-4			Trace	7.03E-4	
60Co, (Ci)																																									Trace		
90Sr+90Y, (Ci)	8.13E+7	3.35E+5	8.10E+7		1.67E+7	1.01E+5	3.45E+6	8.79E+4	1.84E+5	3.92E+5		4.25E+6		2.47E+7			1.06E+8	2.22E-1		3.69E+6	1.02E+8	1.84E-1	3.69E+6			3.69E+6		8.14E-1			1.07E+0	3.68E+6			1.25E-2	1.02E+8	8.54E-3	7.86E-1			Trace	7.86E-1	
99Tc, (Ci)	1.79E+4	6.87E+3	1.10E+4		2.12E+3		8.40E+3	2.81E+1	2.92E+3	8.82E+2	5.03E+0	7.75E+3		2.12E+4			3.23E+4	3.10E-3		2.27E+4	9.52E+3	1.13E-3	2.27E+4			2.27E+4		1.00E-2			1.16E-2	2.27E+4			4.87E-3	9.51E+3	2.90E-3	1.10E-2			Trace	1.10E-2	
137Cs+137Ba, (Ci)	1.87E+7	3.12E+6	1.56E+7		1.91E+7	5.90E+5	9.26E+6	1.22E+5	1.78E+7	2.19E+6	9.78E+4	5.41E+6		3.23E+7			6.79E+7	8.13E-1		6.16E+7	8.29E+6	3.08E+0	6.16E+7			1.42E+6	6.01E+7	4.78E-1			7.72E-1	1.42E+6			3.03E+1	8.63E+7	1.45E-1	2.88E+0			Trace	2.88E+0	
TRU, (Ci)	1.26E+5		1.26E+5		4.80E+4	1.56E+3	2.08E+4	1.34E+4	3.09E+2	3.94E+3	7.26E+2	4.67E+3		8.87E+4			2.14E+5	8.87E-4		1.47E+4	1.99E+5	7.38E-4	1.47E+4			1.47E+4		3.26E-3			7.46E-3	1.48E+4			5.01E-5	1.99E+5	3.43E-5	3.15E-3			Trace	3.15E-3	
Total Ci	1.00E+8	3.47E+6	9.87E+7		3.58E+7	8.92E+5	1.27E+7	2.23E+5	1.80E+7	6.10E+6	9.83E+4	9.66E+6		7.72E+7			1.74E+8	1.04E+0		6.53E+7	1.08E+8	3.26E+0	6.53E+7			5.15E+6	6.01E+7	1.31E+0			3.29E+3	5.15E+6			2.24E+3	1.69E+8	1.56E-1	3.68E+0			Trace	3.68E+0	
0.62-m3 HLW Canisters																																				15,000							
1.25-m3 HLW Canisters																																				7,300							
32-m3 LLW Containers																																7,600											
5300-m3 LLW Vaults																																46											

2/6/96

ALB203/MAN/6-27-95-6

A1.1.2 Sludge Washing

The function of sludge washing is to separate non-radioactive components from insoluble radioactively contaminated sludges/solids. The separation of non-radioactive components (primarily sodium, aluminum, chromium, and phosphate) is achieved by leaching the sludges/solids with a 3*M* caustic solution and washing the leached solids with water to remove dissolved interstitial components.

Received tank waste solutions are transferred from the Receipt/Sample Tanks (TK-131 A, B, and C) into the Primary Filtration Feed Tank (TK-132). The tank waste solutions are recirculated from the Primary Filtration Feed Tank through a cross-flow filter unit to separate the supernatants and concentrate the sludge fraction. Sludges are concentrated to 25 to 30 wt% solids by recirculation from the cross-flow filter unit back into the Primary Filtration Feed Tank. The separated supernatant is collected in the Supernatant Collection Tank, sampled and transferred the supernatant concentration system. The concentrated sludge fraction is transferred into one of two Sludge Leaching Tanks.

A 3*M* caustic solution is added to the solids collected in the Sludge Leaching Tank to dissolve (i.e., caustic digest) non-radioactive components such as aluminum, chromium and phosphate. The Sludge Leaching Tanks are equipped with steam heating and water cooling coils to regulate the temperature of the caustic digestion process. After digestion, the slurry in the Sludge Leach Tank is cooled and pumped through a second cross-flow filter unit to separate the supernatant and concentrate the leached sludges. The leached sludges are washed continuously with water during recirculation through the second cross-flow filter unit. The separated supernatant and wash solutions are collected in the Supernatant Collection Tank, sampled, and transferred to the supernatant concentration system. The leached and washed sludges are collected in the first Sludge Leaching Tank and sampled to determine whether additional leaching is required. If additional leaching is required, the sludges are transferred to the second Sludge Leaching Tank and the process repeated. Leached and washed sludges are slurry transferred from the Sludge Leaching Tanks to a DST for interim storage and blending.

The capacity of the Primary Filtration Feed Tank, Supernatant Collection Tank, Sludge Leaching Tanks are each 113.6 stere.

A1.1.3 Supernatant Concentration

The function of the supernatant concentration is to evaporate the wash and supernatant liquids from the retrieval and sludge washing process before the liquids enter the cesium ion exchange process.

The Evaporator Feed Tank for Tank Farm Operations (TK-135) has a working capacity of 133 stere. The tank contents are pumped (Pump P-137) to the evaporator at an average flow rate of 11,600 kg/h (167 L/min) (Stream #102).

The steam heated Evaporator (EV-139) continuously receives feed (Stream #102) containing 150 ppm suspended solids and 22 wt% dissolved solids. The evaporator concentrates the liquid waste by evaporating 2,600 kg/h of water resulting in a concentrated product (Stream #106) containing 38 percent dissolved solids and 0.027 percent suspended solids. The concentrated product stream (Stream #106) exits at 83 L/min (8,050 kg/h) at a 7*M* sodium concentration and is collected in the concentrated supernatant catch tank (TK-141).

From the supernatant catch tank, concentrated supernatant is pumped (P-142) to the Concentrated Supernatant Sample Tank (TK-143) for sampling and lag storage. After sampling, the liquid (Stream #111) is transferred to the Cesium Ion Exchange Feed Adjust Tank (TK-136). The process also provides the capability to transfer the sampled liquid (Stream #108) to the Transfer Tank (TK-146) where concentrated supernatant can be pumped to the DSTs designated as the Supernatant Accumulation Tanks for storage. The operating capacity of the concentrated supernatant catch tank, sample tank, cesium ion exchange feed adjust tank, and transfer tank is 53 stere.

The evaporator overheads are condensed in the condenser (EC-140). The cooled condensate (Stream #105) is sent to the Process Liquid Waste System for treatment and recycle. The flow rate of the condensate stream is 84 L/min.

A1.1.4 Polishing Filtration

The function of this unit operation is to filter the liquid entering the ion exchange column. Evaporated supernatant liquids are expected to contain varying amounts of suspended solids. The suspended solids within retrieved tank wastes and sludge wash solutions are known to contain TRU elements and strontium particulates. For this study, the solids are removed by filtration using a deep bed granular media filter (note: soluble TRU also may be present, but not yet quantified). This filter is periodically backwashed and rinsed, and the collected solids transferred to the sludge washing process.

Concentrated supernatant is pumped (P-138) from the Cs Ion Exchange Feed Adjust Tank (TK-136) to the Cesium Ion Exchange Feed Tank (TK-200). The supernatant is then pumped (P-201) to the Frit Filter (F-202) at a rate of 83 L/min (Stream #201). Filtrate from the polishing filter flows directly to the cesium ion exchange columns (IX-216-A, B or C, D). The polishing filter media is periodically backflushed with water (stream #203) to the Filter Bed Catch Tank (TK-203).

The operating capacity of the cesium ion exchange feed tank and the filter bed catch tank are 53 stere and 2 stere, respectively.

A1.1.5 Cesium Ion Exchange

The function of the cesium ion exchange is to remove cesium ions from the filtered supernatant. The ion exchange system consists of four ion exchange columns loaded with Duolite CS-100[1] resin. During normal operation, two of the columns operate in series to remove cesium ions from the supernatant while the other pair of columns is being regenerated. The cesium removal efficiency from the supernatant is estimated to be a minimum of 99 percent (DF = 100). The process flow and equipment are described below.

The filtered liquid (Stream #205) from the Frit Filter (F-202) is pumped continuously through two ion exchange columns (IX-216 A, B or C, D) where the resin extracts the cesium ions from the supernatant. The flow rate (Stream #205) is 83 L/min. The effluent from the columns (Stream #207) is collected in the cesium IX waste tank (TK-219). The flow rate of Stream #207 is 83 L/min. The operation continues until the cesium concentration in the effluent from the last column in the series reaches a pre-determined level. At that point, the first column pair is taken out of service and regenerated. The second column pair are put into service processing supernatant.

During regeneration, only the lead column is regenerated. After regeneration, the lead column is placed in the lag column position and the column previously used as the lag column becomes the lead column. Residual feed solution is displaced from the column. If the feed solution contained aluminum in excess of 0.1*M*, then 2 column volume (CV) of 2*M* sodium hydroxide solution (Stream #218) is used to displace the liquid waste from the column; otherwise 2 CV of water is used. This alkaline wash reduces in-bed aluminum precipitation. A water wash is used to displace the sodium hydroxide. The sodium hydroxide flush, water flush, and column effluent are collected in the cesium IX waste tank (TK-221). After the water flush, 6 CV of 0.5*M* nitric acid is used to elute the cesium, sodium, and potassium from the resin. The acid eluant (Stream #213) is collected in the cesium ion exchange Eluant Catch Tank (TK-217). After the acid elution, the column is flushed with 2 CV of water (Stream #215) to displace the remaining acid in the column. The water flush is also collected in the cesium ion exchange eluant catch tank since the flush is contaminated with cesium rich nitric acid. The resin is then flushed with 2 CV of sodium hydroxide solution (Stream #220) to convert the resin to the sodium form. The sodium hydroxide flush is collected in the cesium ion exchange waste tank. The cesium ion exchange processing sequence is summarized in Table A-1.

During normal operation, the column loading waste and regeneration effluent is collected in the cesium IX waste tank (TK-221). The capacity of this tank is 24 stere, and provides only interim holdup until the LLW solution is concentrated. The capacity of the cesium ion exchange eluant catch tank is 60 stere, and is sized to hold the cesium elute along with water flushes of the column.

---

[1]Duolite CS-100 is a registered trademark of Rohm and Haas, Philadelphia, Pennsylvania.

Table A-1. Cesium Removal with Duolite CS-100[2] Resin.

Concentrated Supernatant Feed (based upon average feed composition)	35 CV
Water rinse	2 CV
Nitric acid elution (0.5*M* HNO_3)	6 CV
Water rinse	2 CV
Caustic regeneration	1 CV (0.5*M* NaOH) 1 CV (2.0*M* NaOH)

A1.1.6 High-Level Waste Evaporation

The function of the HLW evaporation is to reduce the volume of the HLW transferred to interim storage and to recycle some of the nitric acid for elution of the ion exchange resin.

HLW (Stream #223) is pumped from the Cesium Ion Exchange Eluant Tank (TK-217) to the cesium ion exchange concentrator (EV-224). The liquid is transferred by Pump-218, and the flow rate of Stream #223 is 90 L/min. Similar to the supernatant evaporator, the HLW cesium ion exchange concentrator is a natural circulation evaporator. The nitric acid solution evaporated from the cesium solution is 2,360 kg/h. The volume reduction achieved by the cesium evaporation is approximately 98 percent.

The overhead (Stream #225) from the concentrator is condensed in the Condenser (EC-223). The cooled condensate (Stream #227) is collected in the Acid Recycle Tank (TK-1538). The flow rate of Stream #227 is 88 L/min.

The concentrated cesium solution (Stream #228) flows from the concentrator at about 1.35 L/min and is collected in the Cesium Concentrator Catch Tank (TK-225). In this tank, the cesium nitrate solution is chemically adjusted for compatibility with the interim storage vessels (in-process waste storage) by addition of sodium hydroxide and sodium nitrite solutions. The adjusted cesium solution (Stream #230) is pump to the DST designated as the Cesium Concentrated HLW Feed Accumulation Tank.

The capacity of the acid recycle tank (TK-210) for the condensate is 46 stere, and it is sized to collect one batch of recovered nitric acid solution. The capacity of the cesium ion exchange concentrator catch tank (TK-225) is 20 stere, and is sized for interim storage of several cesium product batches.

---

[2]Duolite CS-100 is a registered trademark of Rohm and Haas, Philadelphia, Pennsylvania.

A1.1.7 Low-level Waste Evaporation

The function of LLW evaporation is to reduce the volume of the LLW from the ion exchange process before the waste is feed to the LLW melter system.

LLW (Stream #233) is pumped from the cesium IX waste tank (TK-221) to the LLW Evaporator Feed Tank (TK-400) and mixed with recycled LLW from the vitrification and offgas treatment systems. The flow rate of Stream #233 is 170 L/min and the recycled LLW solution flow rate is 80 L/min. The combined LLW solution (Stream #400) is pumped to the LLW Evaporator (EV-402) at 250 L/min. Similar to the supernatant evaporator, the LLW evaporator is a natural circulation evaporator. The amount of water evaporated is 200 kg/h.

The overhead (Stream #401) from the evaporator is condensed in the Condenser (EC-403). The cooled condensate (Stream #403) is pumped to the Condensate Recycle Tanks (TK-800 A, B, and C) where some of the condensate is recycled to the sludge washing process and the remaining condensate is sent to the liquid effluent treatment facility. The flow rate of the cooled condensate is approximately 190 L/min.

Concentrated liquid (Stream #404) is withdrawn from the evaporator and is collected in the LLW Evaporator Catch Tank (TK-404A). The concentrated LLW contains 1.8 wt% suspended solids and 49 wt% dissolved solids. After the liquid level in the evaporator catch tank reaches a pre-determined level, the contents of the tank are transferred (Pump P-405-A) to the Concentrated LLW Sample Tank (TK-404B) for sampling. After the sampling, the liquid (Stream #405) is transferred to the LLW Melter Feed Tank (TK-406). The capacities of the LLW evaporator catch tank, the concentrated LLW sample tank, and the LLW melter feed tank are 35 stere each.

A1.2 LOW-LEVEL WASTE VITRIFICATION AND DISPOSAL

The main vitrification process systems are: feed preparation, melter feed, the melter, cullet handling, cullet/sulfur polymer cement mixing, MOG, vessel offgas systems, and process liquid waste handling. The LLW vitrification process is based on a single 120-Mg/d melter line.

A1.2.1 Feed Preparation, and Melter Feed

The primary functions of these systems are to allow for possible chemical adjustment, provide for sampling, and supply a controlled, monitored waste feed to the melter. The process and equipment are described below.

The vitrification process feed stream consists of an aqueous solution from the pretreatment process. The LLW feed (Stream #404) has been pretreated to remove about 99 wt% of the cesium. The LLW feed is sampled in the Concentrated LLW Sample Tank

(TK-404B). The concentrate (Stream #404) is transferred to the LLW Melter Feed Adjustment Tank (TK-405). In addition to the normal feed from the evaporator, the concentrated LLW sample tank can occasionally receive slurried off-spec cullet (Stream 514) for rework. For this study, no required chemical additives or other adjustments to the feed have been identified for a combustion melter.

Each adjustment tank has a 35 stere capacity and a motor-driven agitator to homogenize the process slurry. An internal cooling coil is provided to remove the waste heat of agitation and to cool the evaporator concentrate to a temperature suitable for pump-out.

A1.2.2 Low-Level Waste Melter

The LLW melter (EM-412) used for this process is a combustion-type melter. The waste slurry is pumped under pressure through spray nozzles into a combustion chamber. The semi-volatiles and volatiles are partitioned to the offgas and the remaining solids and waste oxides are combined with glass forming oxides. The melters receives process slurry (Stream #406) totaling 64 L/min in addition to a stream of dry glass formers (Stream # 407), totaling 53 kg/min.

The combustion gases, combustion byproducts and pre-heated glass flow axially downward through the combustion chamber and enter a cyclone unit on a tangent. The hot combustion gases and byproducts flow axially through the cyclone creating a rotating gas flow. The glass solids are deposited along the refractory wall by the action of the rotating gases centrifugal force and form a thin film as they flow axially through the cyclone.

The molten glass film is approximately 1300 °C that collects in the base of the melter and is discharged into the Glass Separator (S-413). The combustion chamber and glass separations chambers are refractory line to eliminate heat losses and protect the vessel wall from the hot, caustic gases. Molten glass continuously overflows a weir built into the glass separator for flow control. The molten glass gravity flows into the Quench Flume (MQ-414) where it is cooled with chilled water and fractured into cullet. The glass cullet contains up to 25 percent by weight of waste as sodium oxide.

A1.2.3 Low-Level Waste Cullet Handling

The cullet and water pass through a roll crusher (MC-415) to break up large pieces of glass. The cullet and water are collected in the LLW Cullet Catch Tank (TK-416). The cullet slurry is pumped at 400 L/min from the catch tank to the Screen (FS-422) to remove water and to separate undersized cullet. The cullet is then transferred by gravity to the LLW Cullet Day Lag Storage and dried (B-427A). The cullet is held in the lag storage bin until sample analyses are complete. Accepted cullet is then transferred via a pneumatic transfer system through a cyclone (FC-432) to the day bin (B-434). From the day bin, the cullet is

fed by gravity to the Mixer (MM-440) where the cullet is mixed with molten sulfur, an oligomer, and dicyclopentadiene (DCPD) to form the sulfur polymer cement.

If necessary, out-of-specification cullet is transferred via the pneumatic transfer system from the cullet lag storage bin to the Recycle Cullet Catch Tank (TK-508) through Cyclone (FC-500) and another Roll Crusher (MC-502). In the cyclone, the exhaust air passes through sintered metal filters, where fine particles are removed.

A1.2.3.1 Equipment Descriptions. The equipment for the cullet handling system is described below:

- The Quench Flume (MQ-414) is an enclosed trough in which chilled water passes through at a rate of 1,420 L/min. In the quench flume, the molten glass that discharges from the Melter Separator (S-413) makes contact with chilled water and forms cullet. The quench flume is equipped with a chilled water inlet nozzle, a molten glass inlet, cullet slurry outlet and a vapor outlet.

- The Roll Crushers (MC-415 and MC-502) break large pieces of cullet into desired sizes. There are two roll crushers in the cullet handling system. One Roll Crusher (MC-415) located after the Quench Flume (MQ-414), breaks oversize cullet pieces into 6 mm or smaller cullet. The second Roll Crusher (MC-502), that is in the cullet recycle system, crushes the cullet before it enters the Recycle Cullet Catch Tank (TK-503).

- The Screen (FS-422) removes water and separates the undersized cullet. The Screen is designed for accurate sizing of the cullet. Cullet is transferred to LLW Cullet Lag Storage (B-427). The undersized cullet and water are collected in the LLW Filter Catch Tank (TK-426). Clean demineralized water is periodically added to the screen to enable periodic water and fines purge.

- The LLW Cullet Lag Storage (B-427) dries cullet and provides cullet lag storage. Cullet is dried by blowing heated air through the cullet. The storage system is divided into 100 ton compartments. Cullet enters the cullet pneumatic transfer system through a bottom discharge in the lag storage bin.

- The Pneumatic Transfer System transports cullet from the cullet lag storage bins through Cyclones (FC-432 and FC-500) to either the Day Bin (B-434) or the Recycle Cullet Catch Tank (TK-503). The pneumatic transfer system uses plant air as a motive force for transferring the cullet.

- The Cyclones (FC-432 and FC-500) receive cullet from the cullet storage bins via the pneumatic transfer system. Cyclones in the cullet handling system are located before the Day Bin (B-434) and the Recycle Cullet Catch Tank (TK-503). In the cyclones, the sintered metal filters are high-efficiency filters to remove particle sizes 3-5 μm or larger. The sintered metal filters in the

cyclones are cleaned by a compressed air pulse system. The particles from the filters are discharged to either the day bin or the recycle cullet catch tank.

- The Day Bin (B-434) is designed to accept cullet from the Cyclone (FC-432) via a rotary star feeder (M433). The day bin has a capacity of 11 stere of cullet. The day bin is equipped with a load cell to weigh the cullet before the cullet is discharged into the Mixer (MM-440).

A1.2.4 Cullet Disposal

A cullet-in-sulfur polymer cement storage concept was used for this facility configuration evaluation, however, cullet alone can be placed into the disposal packages. The system contains a Mixer (MM-440), Surge Tank (TK-441), and Sulfur Pump (P-442). LLW glass cullet is transferred by gravity from the cullet day bins to the mixer. At the mixer, sulfur cement from the sulfur make-up system is mixed with the cullet. The resulting sulfur/cullet mixture is approximately 70 wt% cullet. This mixture is discharged from the mixer into 32 stere carbon steel disposal packages.

A1.2.5 Melter Offgas

The functions of the MOG System are to cool and quench the melter offgas, remove radionuclides, catalytically destroy NO_x, and recover SO_2 as elemental sulfur to permit the release of the offgas stream from the plant stack to an uncontrolled area.

The gas cooling and quenching portion of the MOG system consists of a quench tower, a venturi scrubber and separator, and a mist eliminator. A cooler, chiller, scrub solution tank, scrub solution recirculating pump, and scrub solution transfer pump are also provided. The radionuclide removal portion of the MOG system includes submicron particulate filtration and blowers. The emissions abatement portion of the MOG system consists of a single operating train of catalytic NO_x destruction and SO_2 removal/sulfur recovery equipment.

MOG from the LLW melter (Stream 410) is quenched from 1,360 °C to 75 °C by direct, counter-current contact with water in a LLW Quench Tower (T-609). Entrained particulates are scrubbed from the offgas in the quench tower. The scrub water and condensed moisture from the bottom of the tower gravity drains back to the LLW Scrub Solution Tank (TK-614) for re-use. The quenched MOG (Stream 619) is contacted with scrub water in the LLW Venturi Scrubber (SC-615) to further remove entrained particulates. The LLW Separator (S-616) receives the venturi scrubber discharge and separates the offgas (Stream 624) from the scrub water. The scrub water gravity drains to the LLW scrub solution tank.

A Chiller (EC-617) cools the offgas leaving the separator to 30 °C before it enters the LLW Mist Eliminator (DE-618). The mist eliminator removes mist and particulates from the offgas stream. A continuous water spray ensures self-cleaning run-down of condensate and particulates from the elements. The rinse from the mist eliminator gravity drains to the scrub solution tank where it mixes with scrub solution and condensate from the quench tower and separator. The liquid mixture from the scrub solution tank is cooled (EC-610) and recycled back to the quench tower and venturi scrubber. A purge of excess process condensate plus associated solids (Stream 630) is continuously discharged from the scrub solution tank and collected in the LLW Scrub Filter Tank (TK-611). The solution is transferred (Stream 692) from the filter tank to the LLW Evaporator Feed Tank (TK-400) for treatment.

From the mist eliminator, offgas (Stream 627) flows to one of two identical parallel trains of filtration at 25 stere/min. One of the two trains is in operation while the second train is on standby. Each train consists of a Heater (E-625 A and B), two Metal HEPA Filters in series (FM-625 A1 and B1 and FM-625 A2 and B2), and a Blower (MB-625 A and B). The first of the two filters is a high-efficiency metal fiber (HEMF) filter, while the second is a conventional HEPA filter. The heater and the HEMF filter are remotely maintainable and are located inside a hot cell. The HEPA filter and blower are both located in a contact-maintained room.

The heater raises the offgas temperature to prevent the downstream condensation of moisture. The metal HEPA filters provide filtration of the offgas for submicron particulates. The blower draws the offgas through the system and provides a pressure confinement boundary for all of the serviced equipment, including the melter, relative to the remote cells.

The filtered offgases discharged from the blowers are combined (Stream 634) and then processed further to remove SO_2 and catalytically destroy NO_x. The combined offgas stream is first blended with pure oxygen and the recycled tailgas from the downstream Claus Unit (CL-650) before entering the Melter Offgas Heat Exchanger (EC-628). Oxygen addition facilitates SO_2 absorption and catalytic NO_x destruction. In the exchanger, the offgas is warmed to 400 °C by exchange with the hot effluent gas from the NO_x Catalytic Reactor (R-632). The offgas then flows to one of three CuO bed absorbers containing CuO-impregnated alumina sorbent. Approximately 90 percent of the SO_2 is absorbed and converted to copper sulfate ($CuSO_4$) in the presence of oxygen in the SO_2 Absorber (R-630).

One CuO bed provides SO_2 absorption, the remaining two CuO beds are in the sulfate reduction mode and the SO_2 absorber regeneration mode, respectively. For Sulfate Reduction (R-633), a reducing gas stream containing hydrogen reduces the $CuSO_4$ to form gaseous H_2S. The reducing gas is produced by catalytically cracking ammonia to nitrogen gas and hydrogen. The H_2S-rich effluent (Stream 648) is sent to the Claus Unit that recovers most of the sulfur in its elemental form. The rate of sulfur production for the Claus Unit is 0.30 ton/d. The tailgas from the Claus Unit (Stream 686) is recycled to the melter offgas, downstream of the blowers, and sent to the SO_2 absorber for further removal of SO_2. The SO_2 Absorber Regeneration (R-635) prepares the CuO bed for SO_2 absorption service by

passing air across the absorber bed to oxidize the sorbent. Air leaving absorber regeneration (Stream 652) is sent to the Vessel OffGas (VOG) system for treatment.

From the SO_2 absorption process, the offgas (Stream 641) is preheated to 500 °C in an electric Heater (E-631) before entering the NO_x Reducer. The NO_x reactor contains a catalyst bed for the selective catalytic reduction of nitrogen oxides to produce nitrogen and water vapor in the presence of ammonia. The treated offgas stream is cooled to 65 °C or less as it passes through a heat exchanger and the water-cooled MOG Discharge Cooler (EC-636) before release (Stream 645) to the HVAC exhaust system.

A1.2.6 Vessel Offgas and Condenser Vessel Offgas

The primary function of the VOG and Condenser Vessel Offgas (CVOG) Systems is to decontaminate vessel vent gases to meet requirements for stack release to an uncontrolled area. An additional function of the VOG and CVOG systems is to provide a pressure differential between the process vessels, remote cells, and serviced equipment.

Each of the VOG and CVOG systems consists of a vent collection header, filter preheaters, metal HEPA filters, and blowers. The offgases from the process vessels are collected by the vent header and routed to one of two identical parallel trains of filtration. Each train consists of a heater, two metal HEPA filters, and a blower. The first of the two filters is a HEMF filter while the second is a conventional HEPA filter. The heater and the HEME filter are remotely maintainable and are located inside a hot cell. The HEPA filter and blower are both located in a contact maintained room. The filters remove submicron particulates from the gas stream and the heater raises the offgas temperature to prevent downstream moisture condensation. Following filtration, the vent gases are boosted by one of the two 100-percent capacity blowers before discharge to the HVAC exhaust system.

A1.2.7 Process Liquid Waste

All of the process liquid waste from the facility is in the form of process condensate. This condensate has been evaporated from contaminated process streams.

The Process Condensate Recycle Tanks (TK-800 A and B) and the pH Adjustment Tank (TK-803) are located adjacent to the processing area of the facility. The process condensate recycle tanks receives condensates from the supernatant evaporator (stream #105), LLW feed evaporator (stream #403), the LLW condensate catch tank (stream #428), and the HLW feed evaporator (stream #306).

The process condensate recycle tanks accumulate the incoming feeds as the liquid is continuously generated at a rate of approximately 280 L/min, when conducting pretreatment and LLW vitrification. The process liquid waste is sampled before being transferred to the

pH Adjustment Tank (TK-803). Out-specification waste is returned to the LLW evaporator feed tank for rework.

The condensate recycle and pH adjustment tanks are sized so that two tanks can accommodate the normal forward flow of on-spec liquid. The third tank is used for short-term storage of off-spec waste. Each tank has an operating capacity of 175 stere.

In the adjustment tank, a measured volume of sodium hydroxide is added based on laboratory analysis of samples. The contents of the tank are sampled and analyzed after any further pH adjustments and before transfer out of the facility.

A2.0 PROCESS DESCRIPTION FOR HIGH-LEVEL WASTE

A2.1 HIGH-LEVEL WASTE VITRIFICATION

The process facility is initially constructed as a combined Separations/LLW vitrification facility but with features built-in to allow for the conversion of the 120 Mg/d melter train to a 20 Mg/d HLW melter train and the addition of HLW canister and cask handling equipment at a future date.

The feed material consists of washed HLW slurry and recovered radionuclides from pretreatment. The feed is periodically transferred from storage to the feed preparation system where excess water is removed by filtering the HLW slurry. Soluble solids are removed from the filtrate by evaporation. Solids from other aqueous waste systems are also removed by this evaporation step. The resulting condensate is sent to the process liquid waste system. The concentrated feed slurry is sampled and, if necessary, adjusted before batchwise transfer to the melter feed system. The melter feed system periodically receives batches of melter-ready feed slurry from the feed preparation system and provides a continuous, controlled delivery of it to the melter system.

The melter system continuously receives feed slurry and dry glass formers (frit). Feed slurry and glass formers are blended before the resulting mixture is fed to the melter. The molten glass is poured on a semi-continuous basis from the glass separator, through an opening in the melter cell floor, and into 4.57-m high cylindrical canisters. The canister contains 1.26 stere of glass in 1.44 stere of gross internal volume. As it cools, the glass forms a fractured solid inside the canister.

The glass-filled canisters are plugged and welded closed before they are decontaminated to remove exterior contamination. The spent decontamination liquids are accumulated and recycled to the feed preparation system for evaporation of excess water and recovery of contaminants. The decontaminated canisters, filled with monolithic HLW glass, are placed into an overpack container (four canisters per overpack). Overpack containers are

transferred from the Vitrification Building to interim storage while awaiting eventual shipment to a federal geologic repository. The process produces 7,400 canisters in 1,850 overpacks.

In the MOG system, hot gases from the melter combustion chamber and glass separator are first cooled by counter-current contact with scrub water. This operation also results in significant water vapor condensation and the capture of entrained particulates and water-soluble contaminants. A bleed stream of the excess condensates from the MOG system routes to the chloride/fluoride removal system. This system removes the chloride and fluoride not incorporated into the glass as HCl and HF, neutralizes the stream, and grouts the waste for disposal. Excess condensates from the MOG system are recycled to the feed preparation system evaporator.

The scrubbed MOG undergoes further cooling and successive stages of filtration to remove radionuclides, after which sulfur dioxide (SO_2) is absorbed from the gas and subsequently converted into elemental sulfur by a Claus unit. The MOG finally passes through a catalytic reactor where NO_x is converted into nitrogen and water vapor before being discharged to the HVAC system.

The VOG and condenser vessel offgas (CVOG) systems decontaminate the ventilation gases from tanks in the feed receipt, feed preparation, melter feed, and process liquid waste systems. The treated VOG and condenser offgas streams are discharged to the HVAC system.

The process liquid waste system receives the continuously generated, clean overhead condensates from the feed preparation system. It performs sampling, interim storage, and pH adjustment before periodically transferring aqueous waste to a retention basin. Off-specification waste is returned to the feed preparation system for reevaporation.

The HVAC system combines building ventilation gases with the treated MOG, VOG, and CVOG streams. The combined stream undergoes further high-efficiency filtration before discharge from the plant stack. Several utility systems supply heat, cooling, electricity, and other utilities to the plant process systems.

A3.0 PROCESS FLOW DIAGRAMS

Figure A-2, sheets 1 through 23, show the process flow for the Sequential Process Facility Flow Diagram.

This page intentionally left blank.

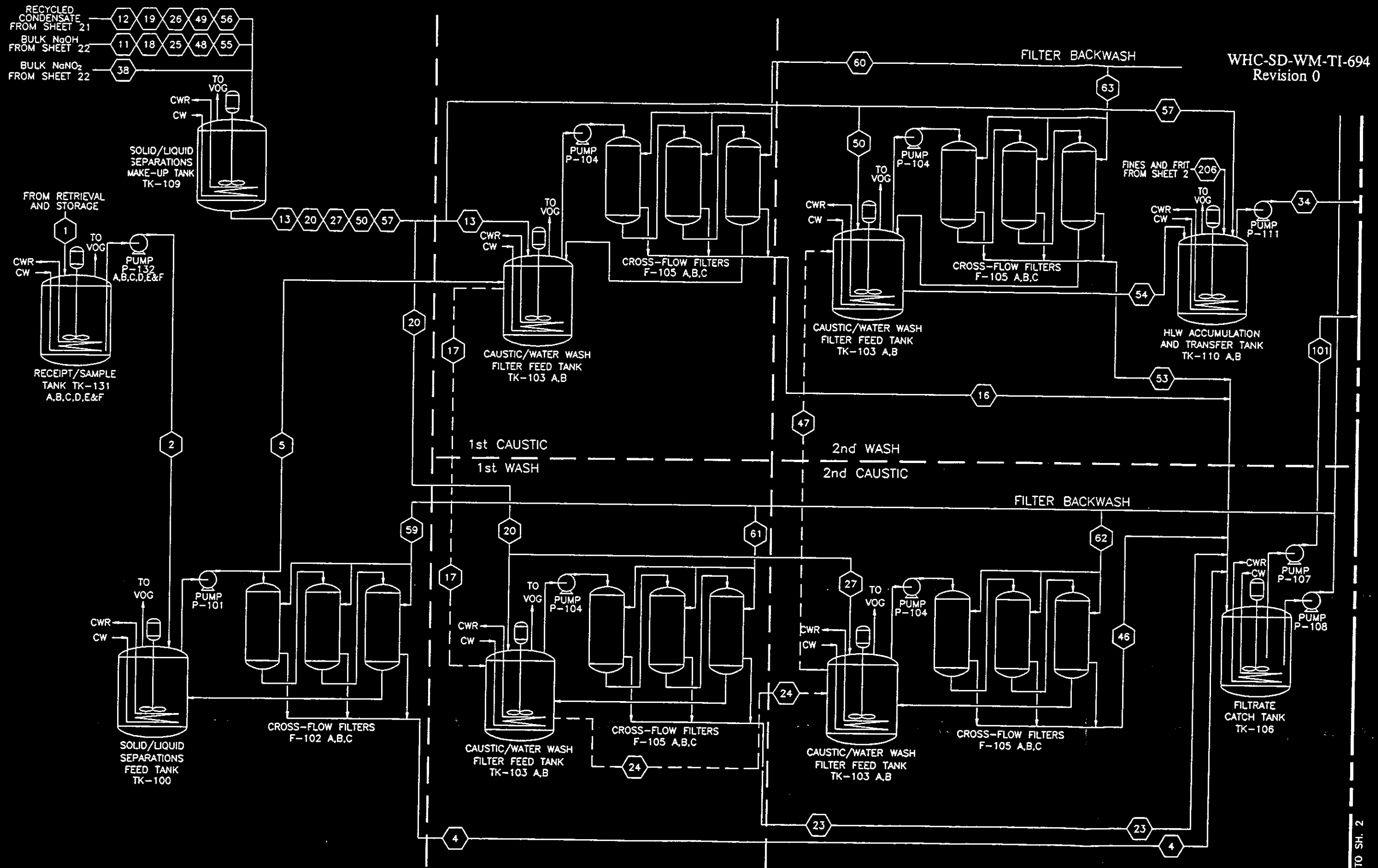

Figure A-2. Sequential Process Facility Flow Diagram.

(Sheet 1 of 23)

SEQUENTIAL PROCESS FACILITY FLOW DIAGRAM SHEET 1

D0360101

Figure A-2. Sequential Process Facility Flow Diagram.

(Sheet 2 of 23)

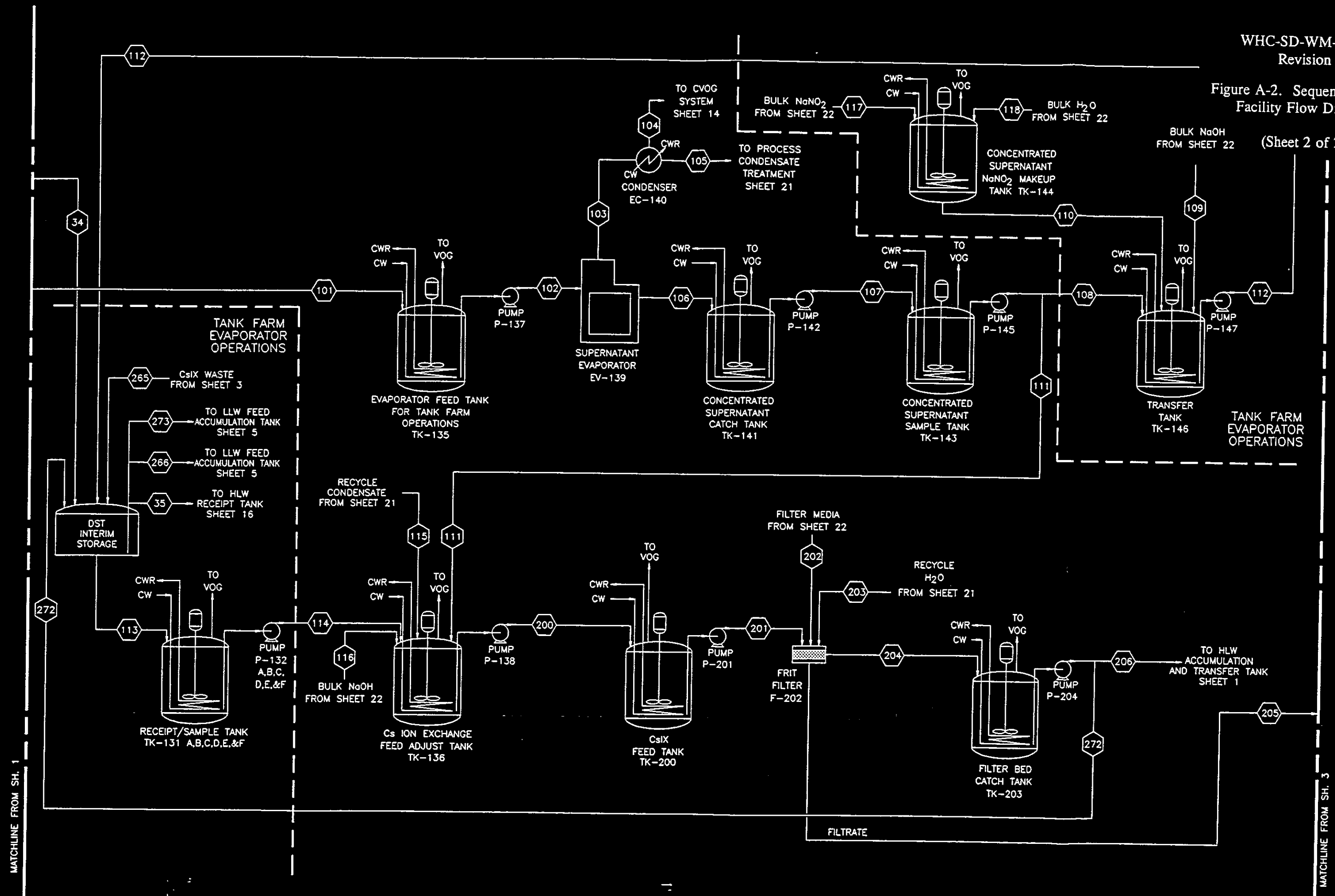

SEQUENTIAL PROCESS FACILITY FLOW DIAGRAM SHEET 2

D0360102

Figure A-2. Sequential Process Facility Flow Diagram.

(Sheet 3 of 23)

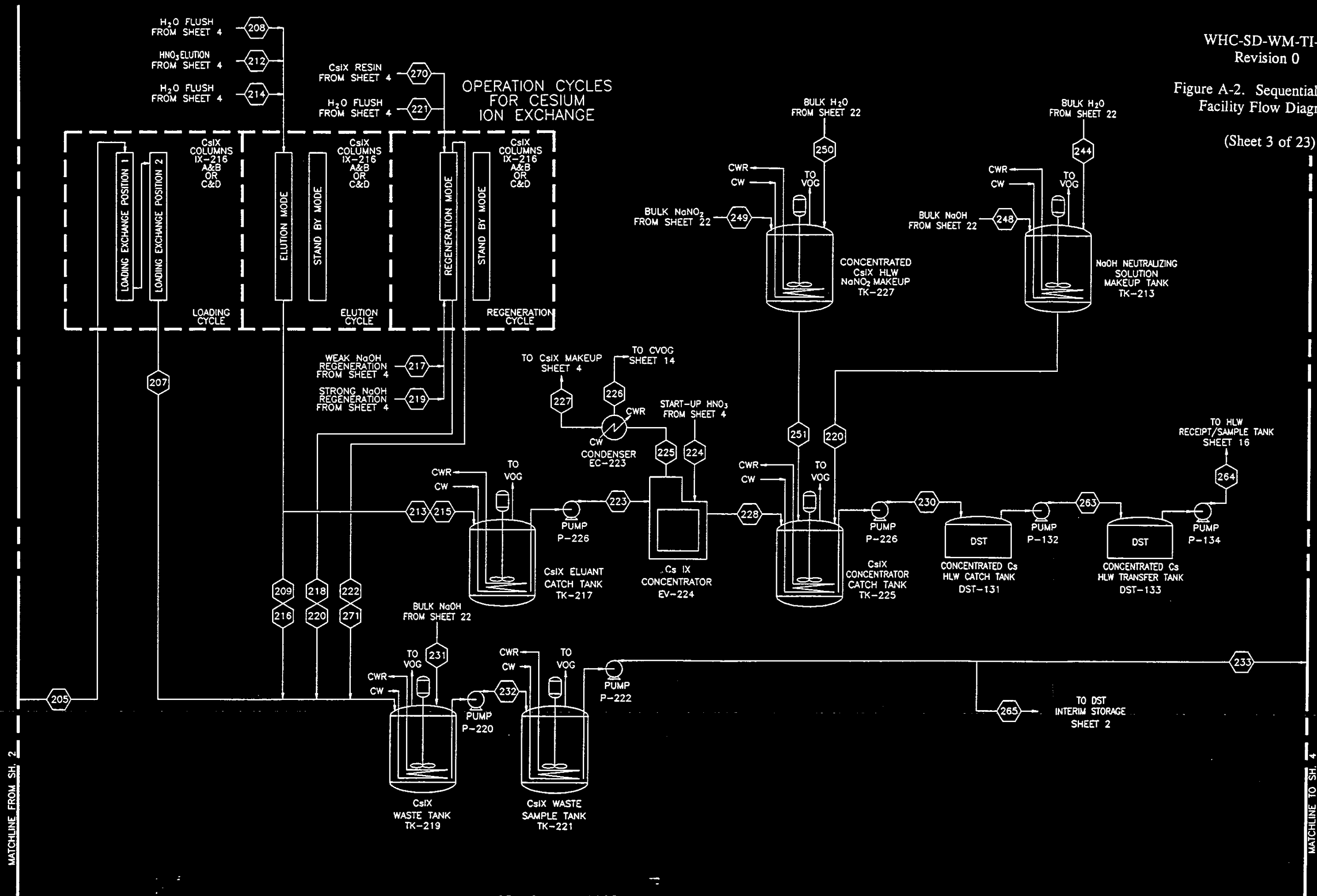

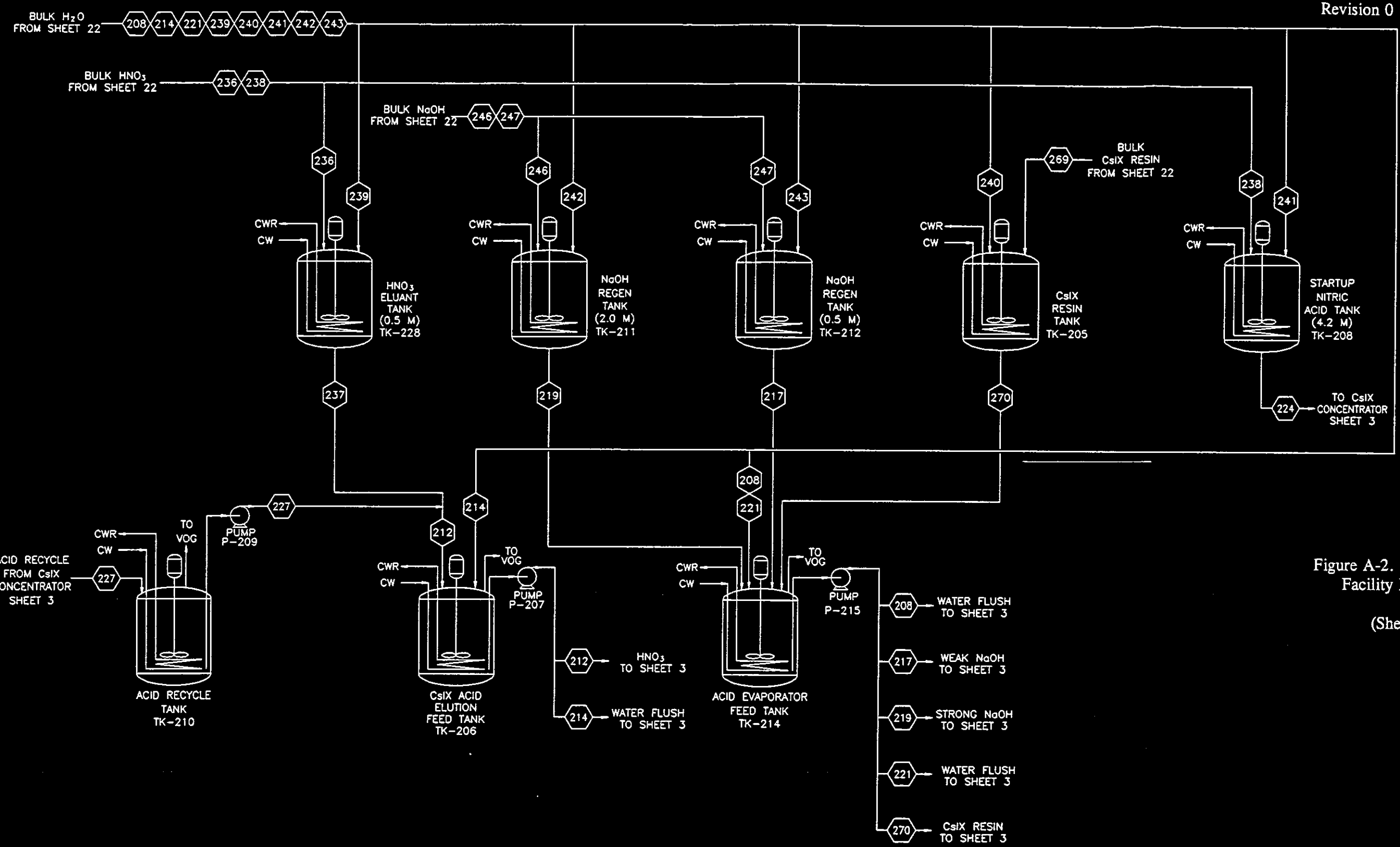

Figure A-2. Sequential Process Facility Flow Diagram.

(Sheet 4 of 23)

SEQUENTIAL PROCESS FACILITY FLOW DIAGRAM SHEET 4

D0360104

Figure A-2. Sequential Process Facility Flow Diagram.

(Sheet 5 of 23)

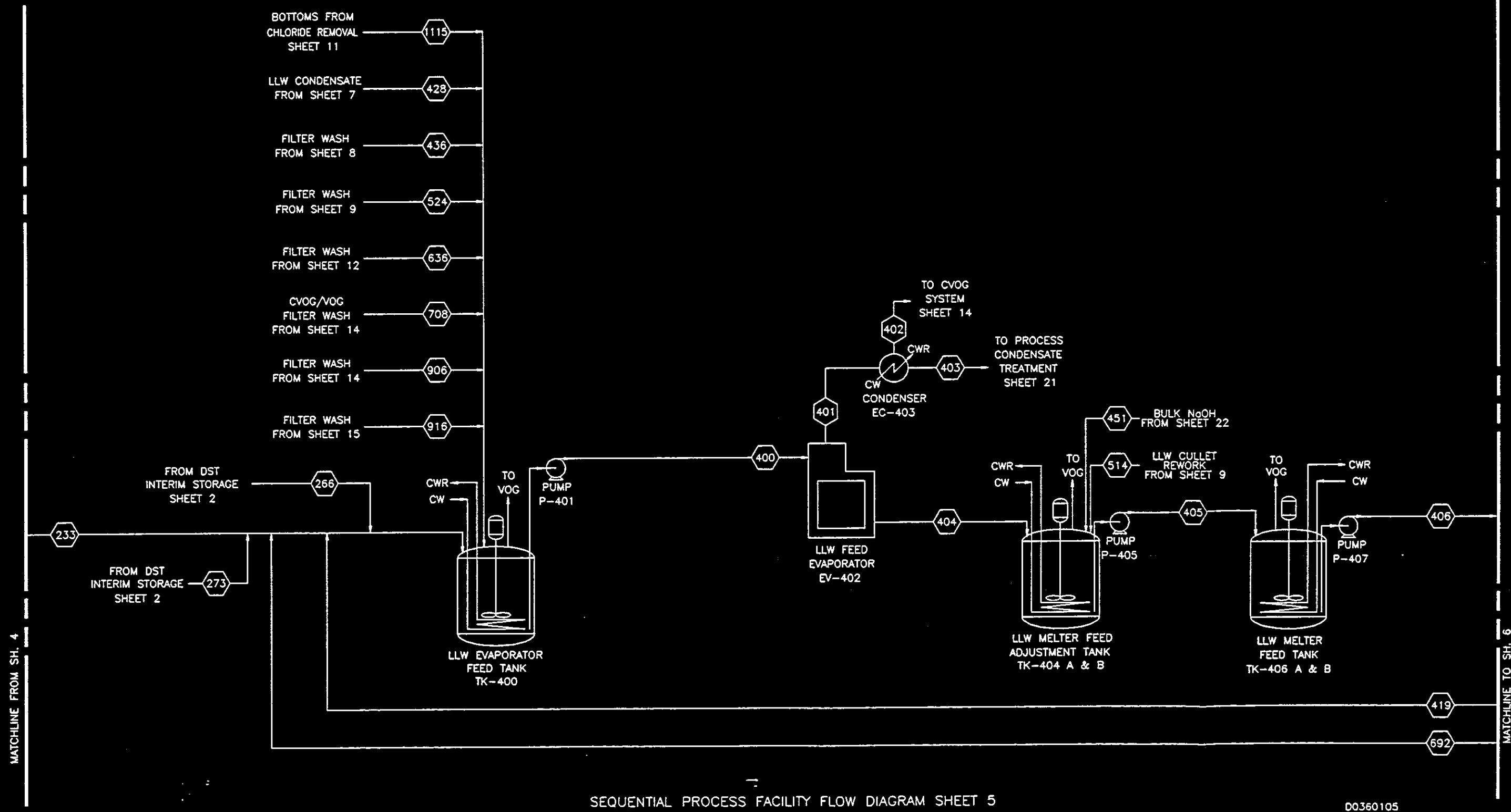

Figure A-2. Sequential Process Facility Flow Diagram.

(Sheet 6 of 23)

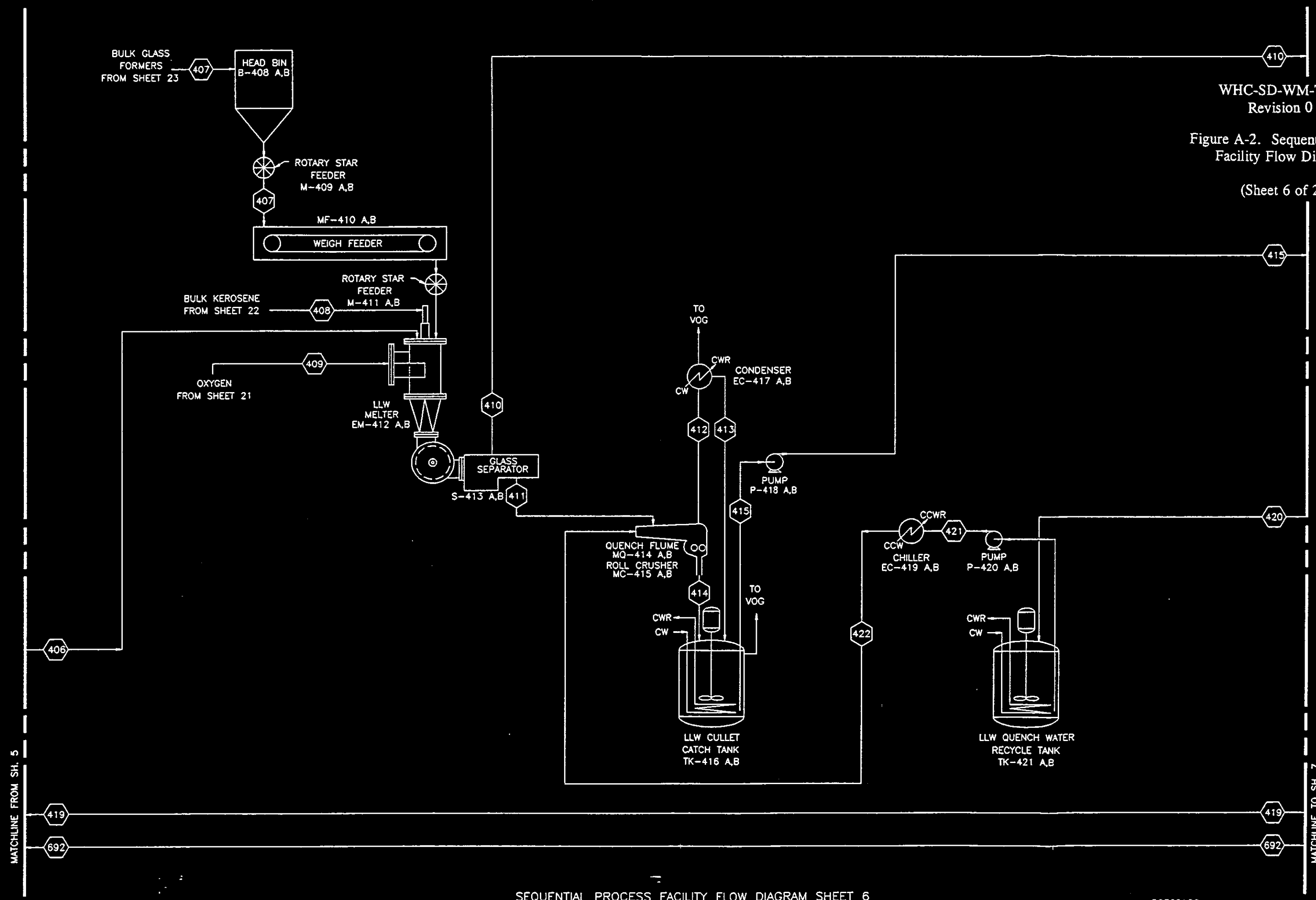

Figure A-2. Sequential Process Facility Flow Diagram.

(Sheet 7 of 23)

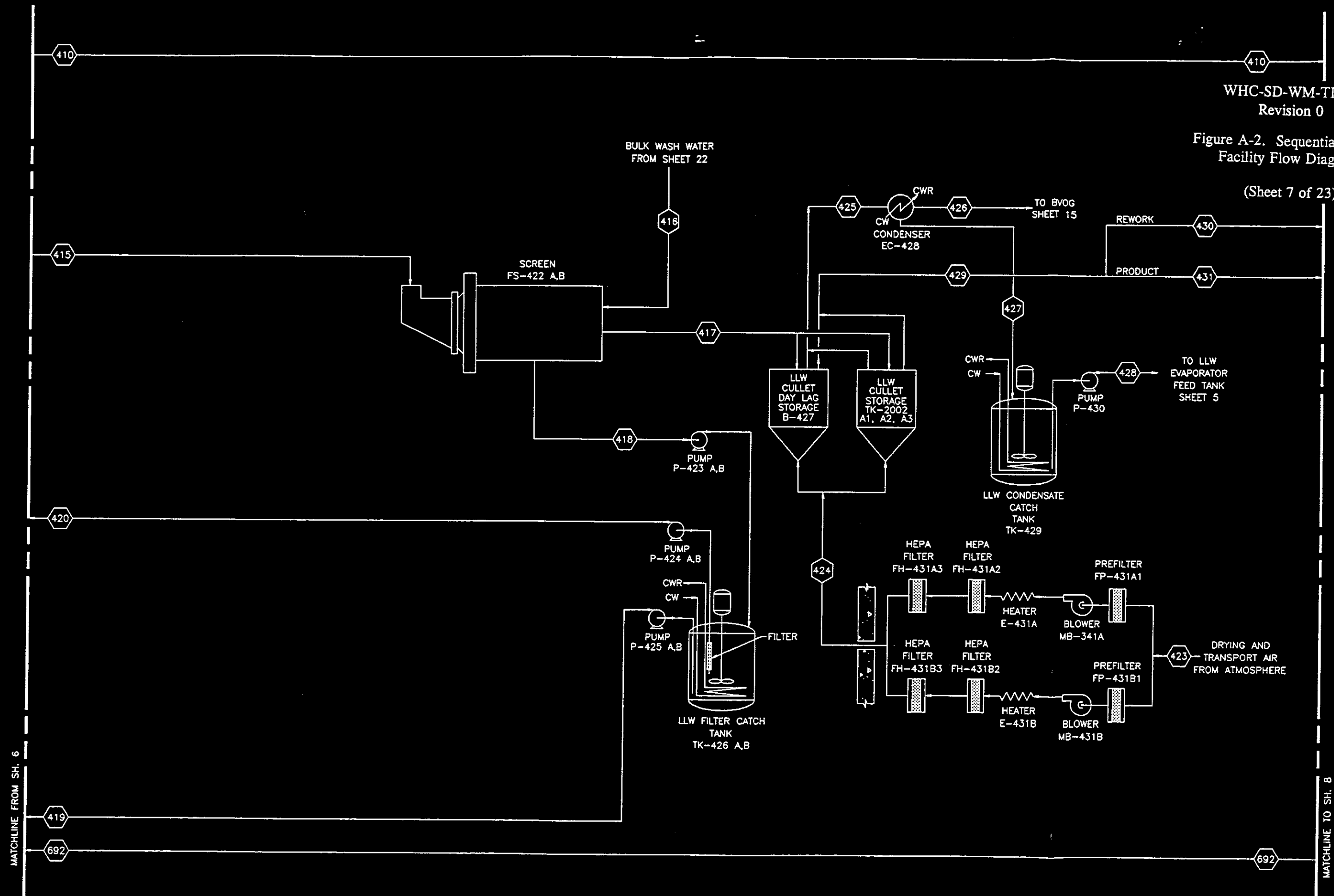

SEQUENTIAL PROCESS FACILITY FLOW DIAGRAM SHEET 7

D0360107

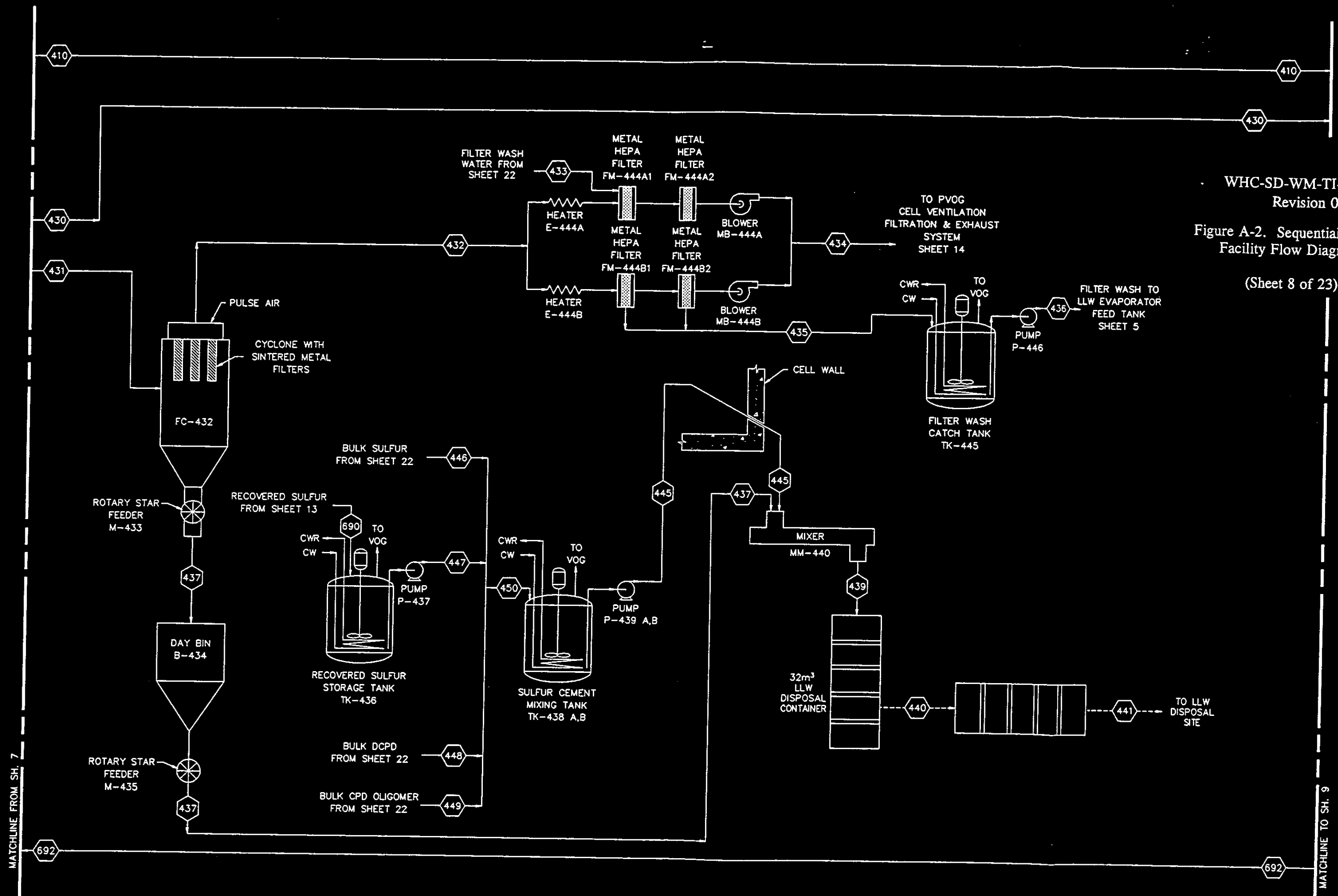

SEQUENTIAL PROCESS FACILITY FLOW DIAGRAM SHEET 8

D0360109

Figure A-2. Sequential Process Facility Flow Diagram.

(Sheet 8 of 23)

Figure A-2. Sequential Process Facility Flow Diagram.

(Sheet 9 of 23)

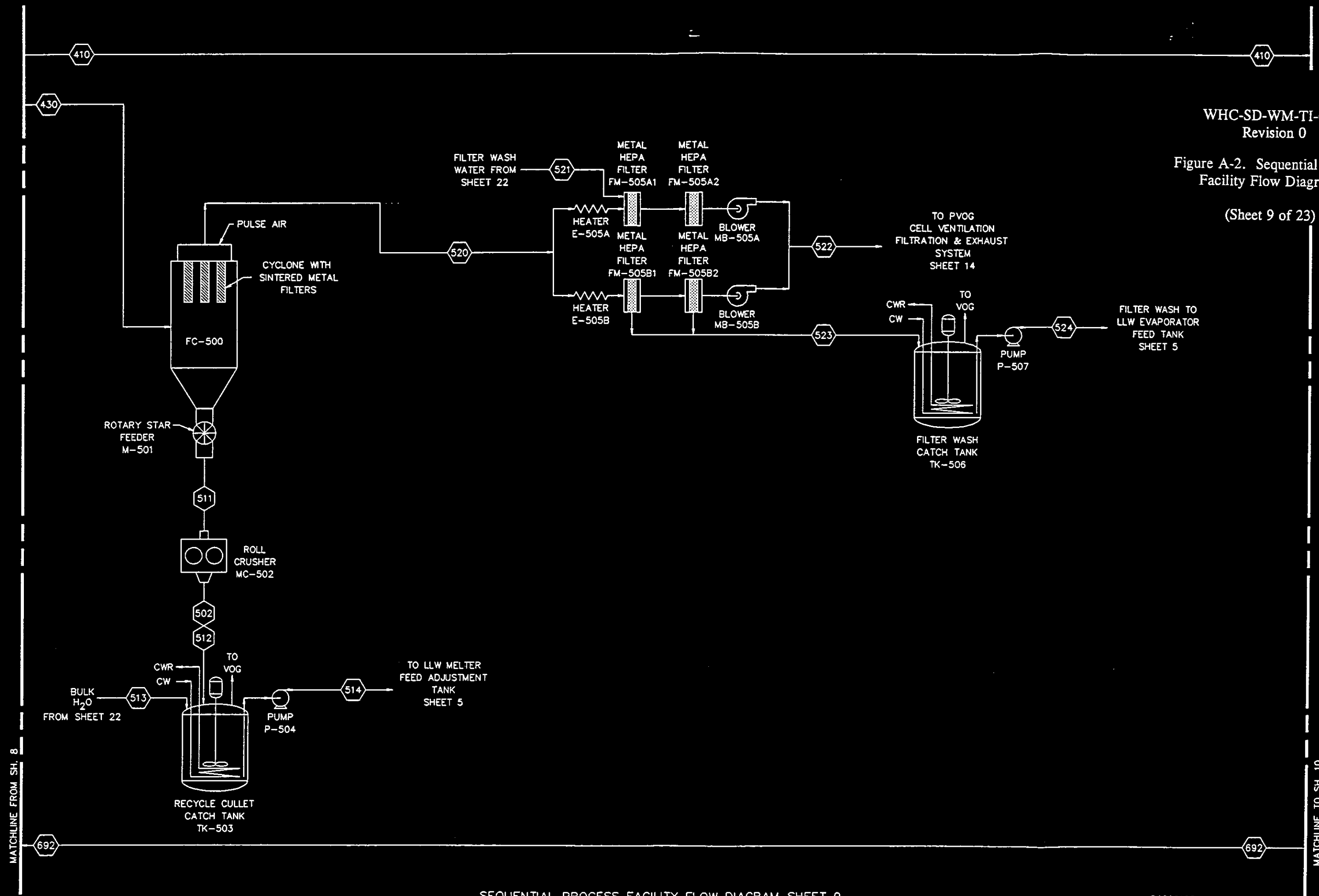

SEQUENTIAL PROCESS FACILITY FLOW DIAGRAM SHEET 9

D0360109

Figure A-2. Sequential Process Facility Flow Diagram.

(Sheet 10 of 23)

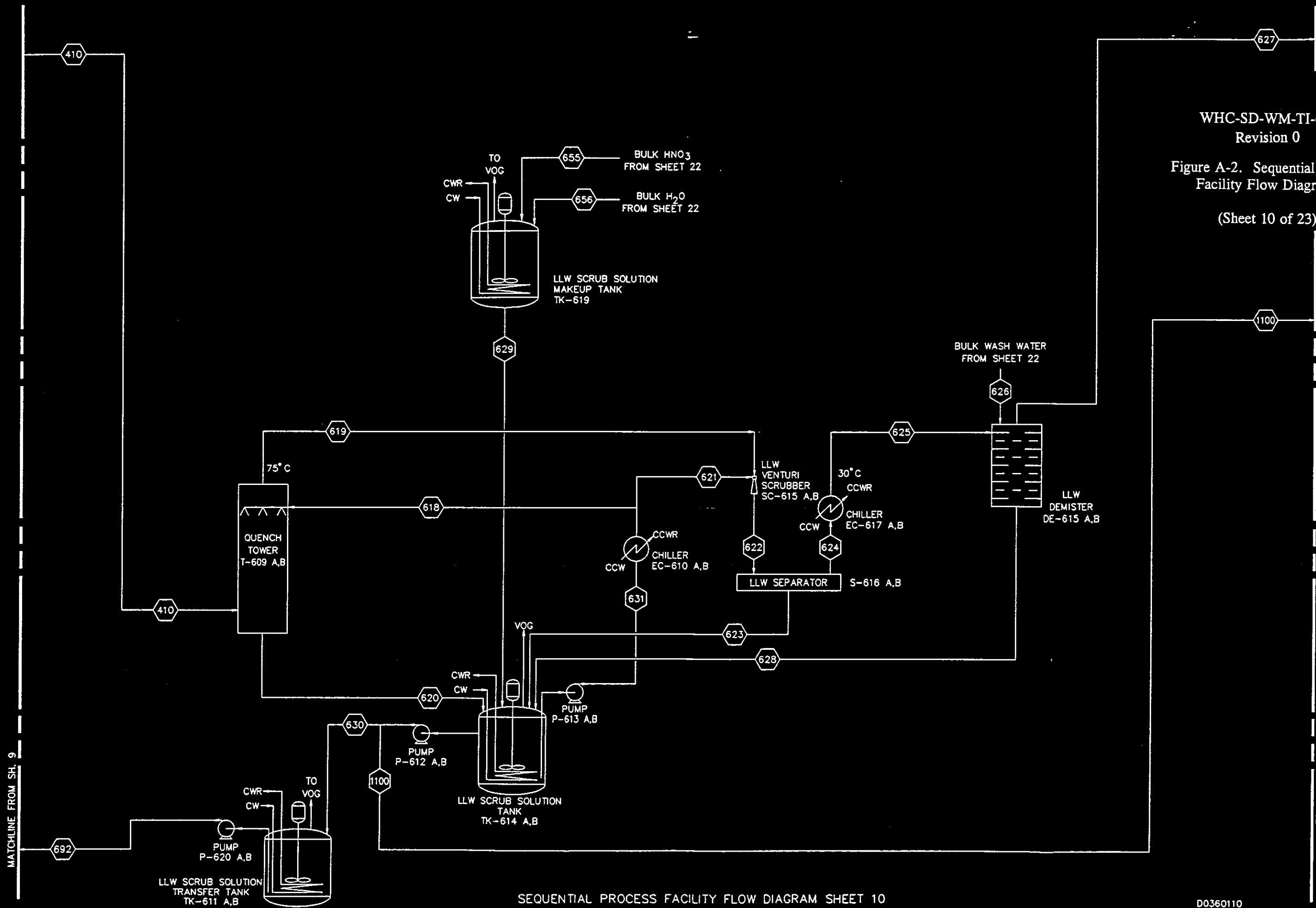

SEQUENTIAL PROCESS FACILITY FLOW DIAGRAM SHEET 10

D0360110

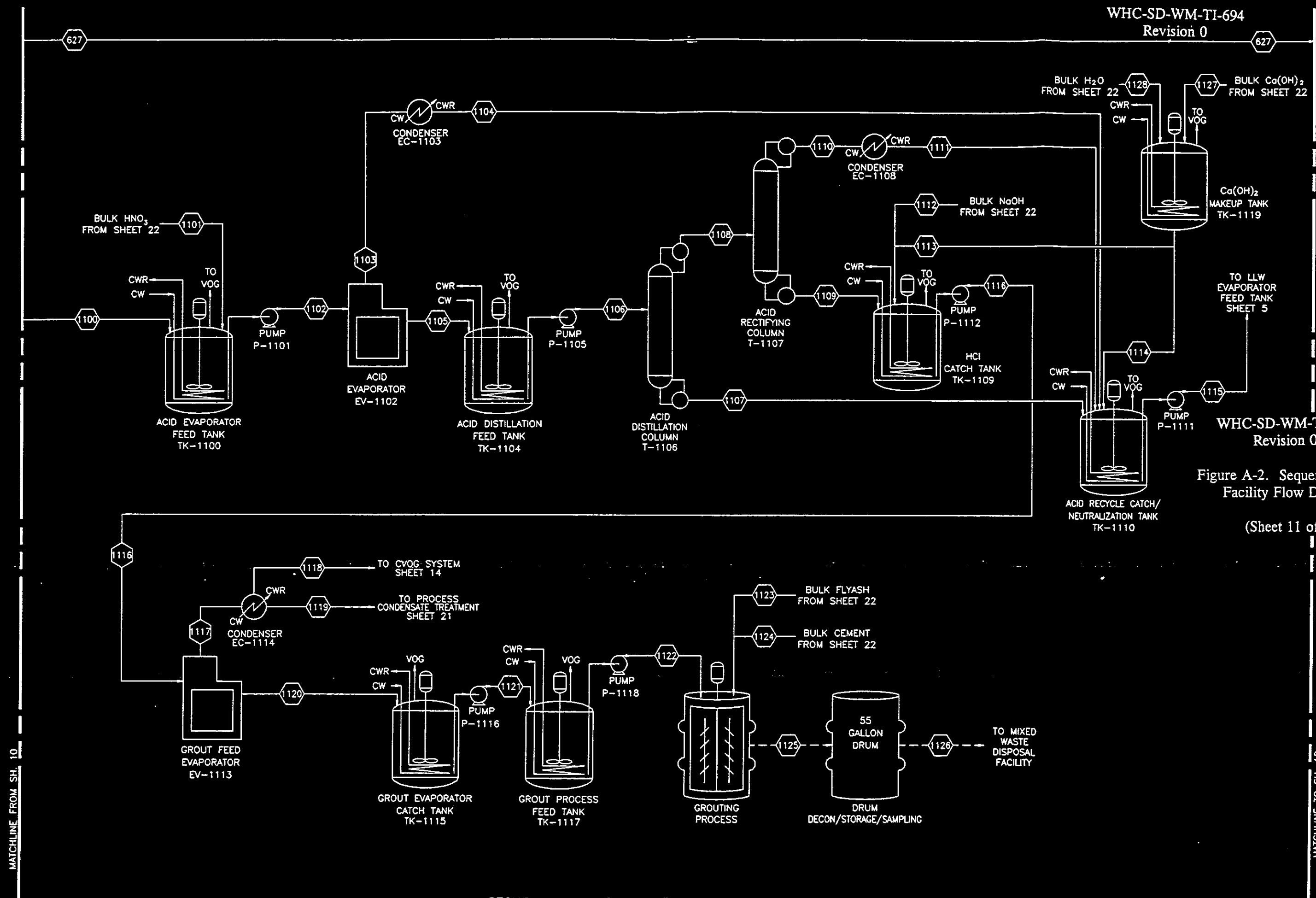

Figure A-2. Sequential Process Facility Flow Diagram.

(Sheet 11 of 23)

Figure A-2. Sequential Process Facility Flow Diagram.

(Sheet 12 of 23)

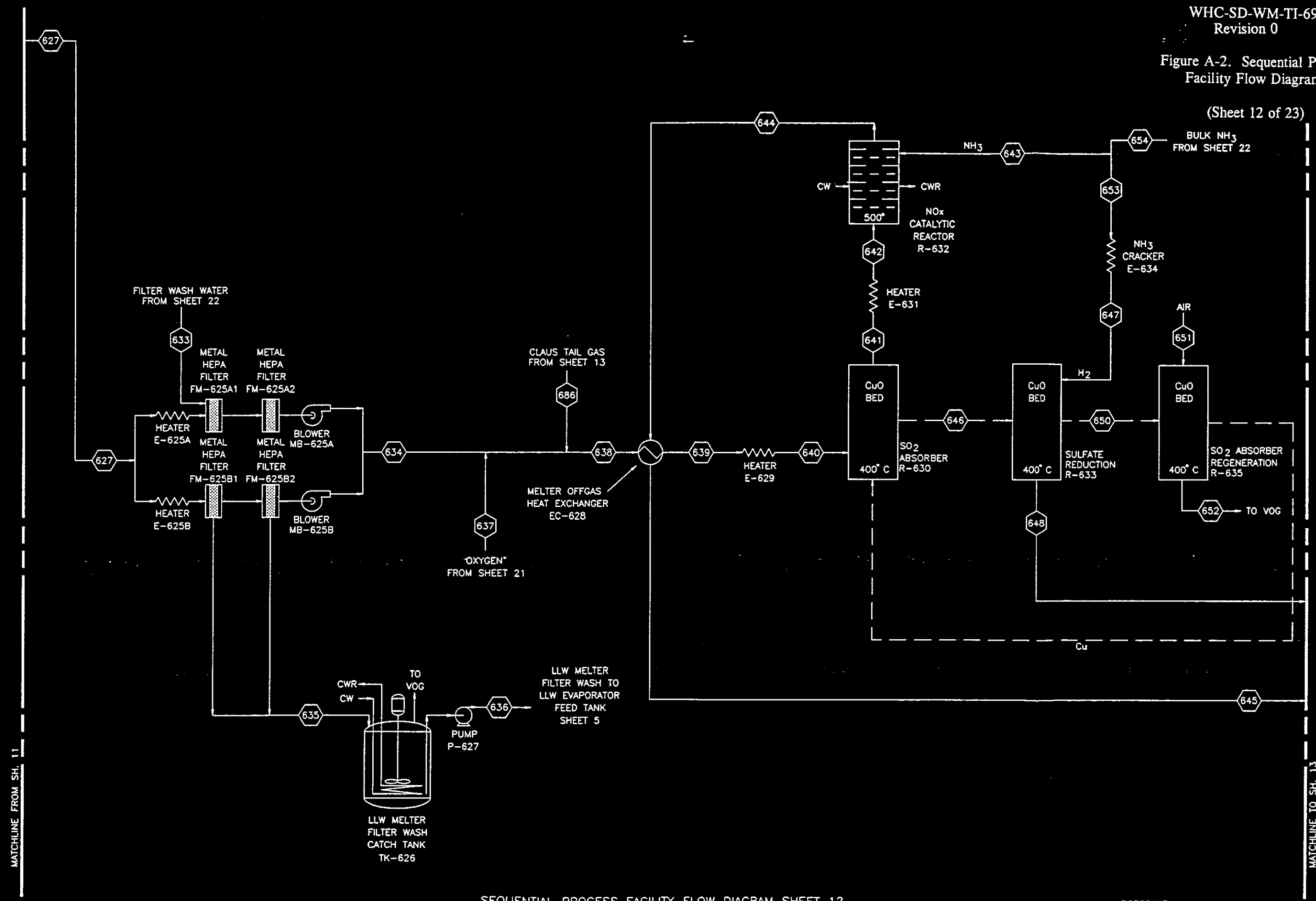

SEQUENTIAL PROCESS FACILITY FLOW DIAGRAM SHEET 12

D0360112

Figure A-2. Sequential Process Facility Flow Diagram.

(Sheet 13 of 23)

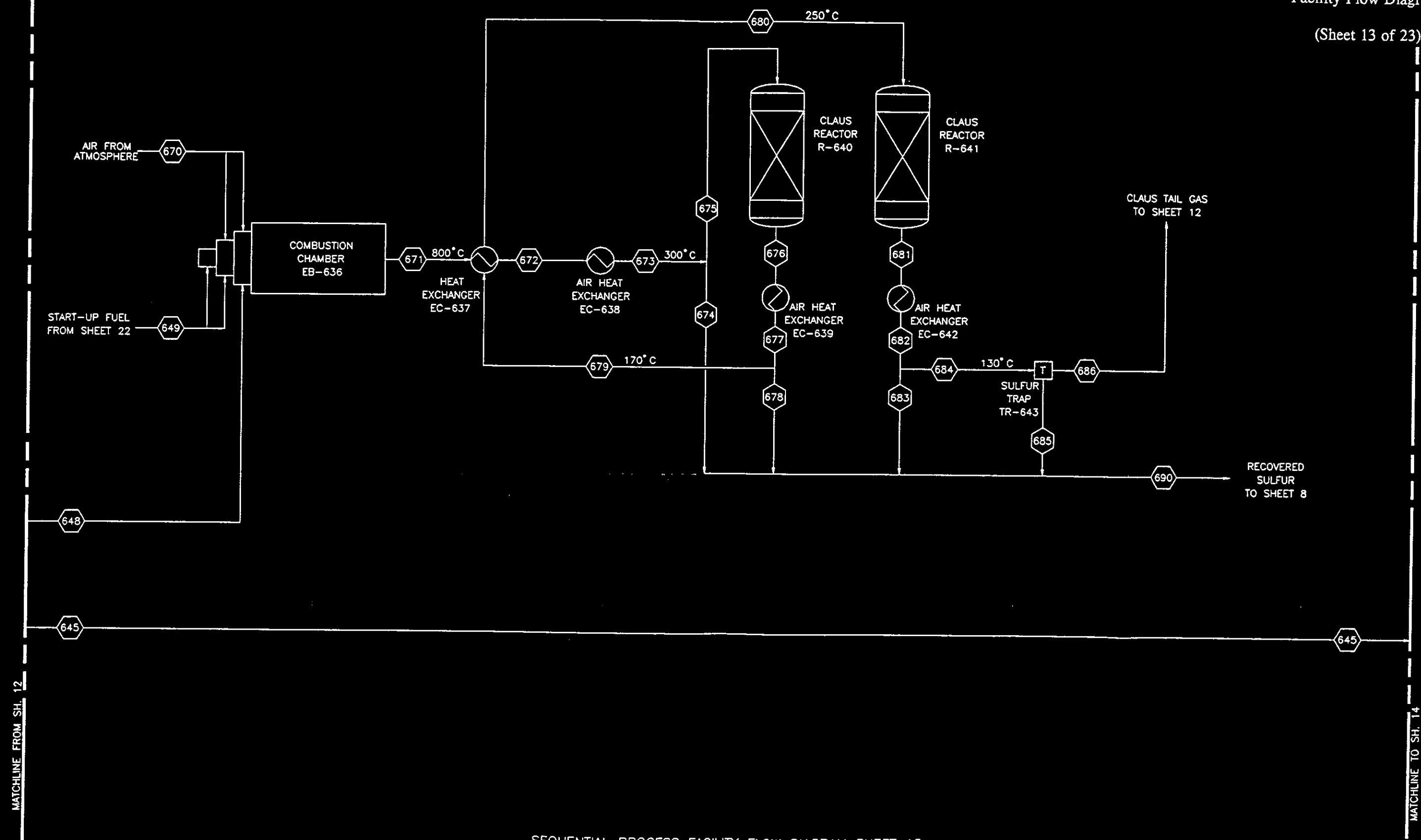

SEQUENTIAL PROCESS FACILITY FLOW DIAGRAM SHEET 13

D0360113

Figure A-2. Sequential Process Facility Flow Diagram.

(Sheet 14 of 23)

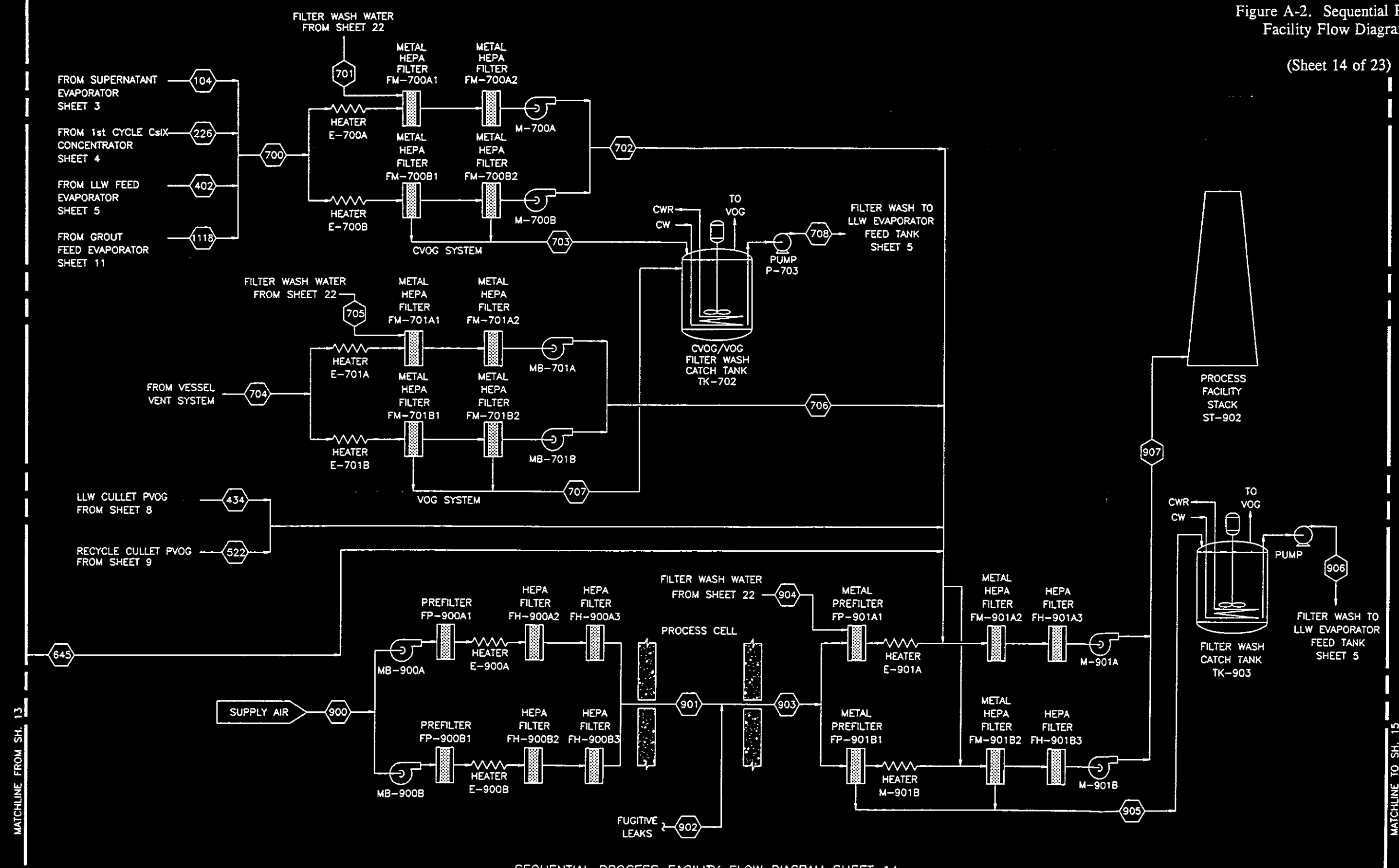

Figure A-2. Sequential Process Facility Flow Diagram.

(Sheet 15 of 23)

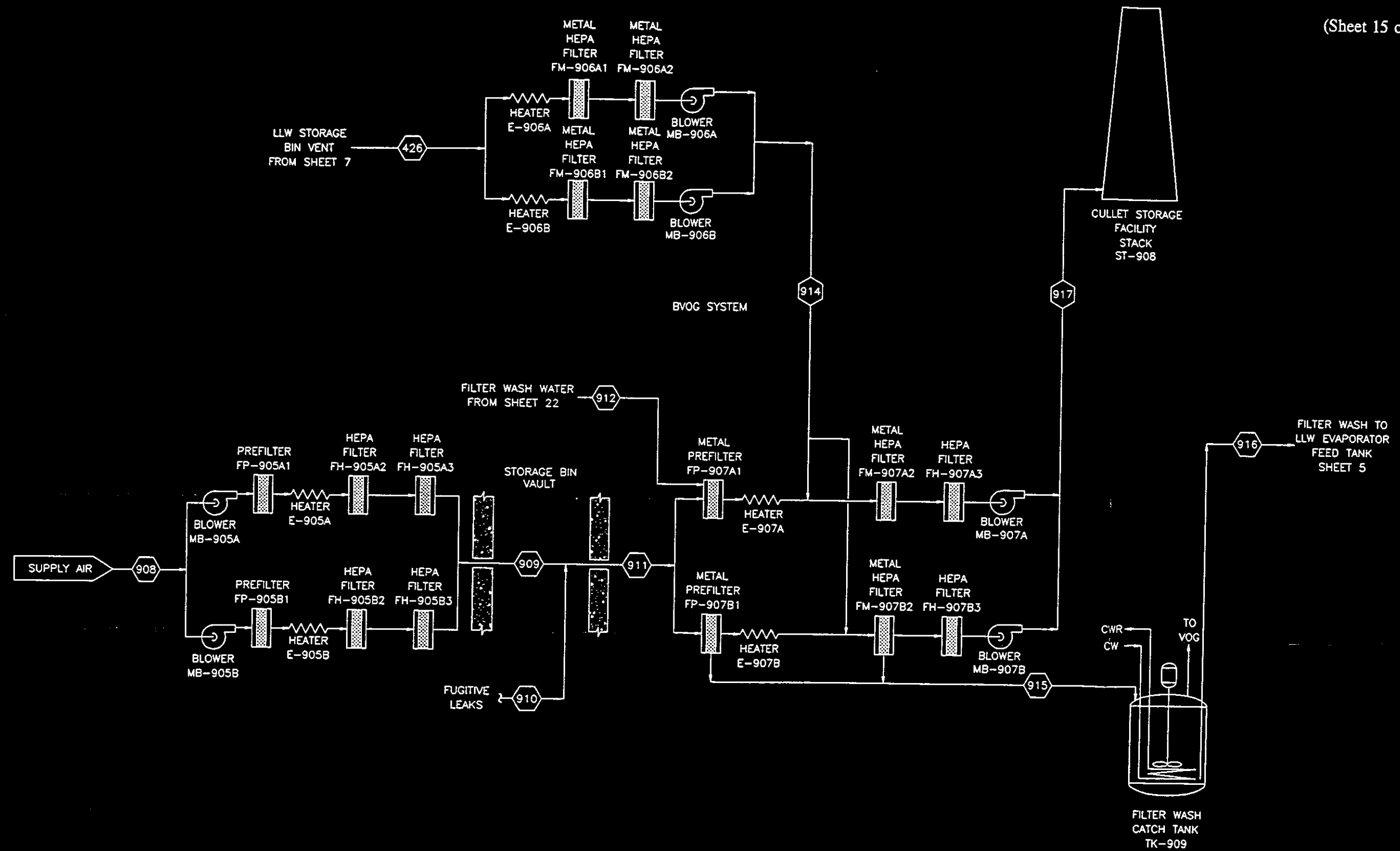

SEQUENTIAL PROCESS FACILITY FLOW DIAGRAM SHEET 15

D0360115

Figure A-2. Sequential Process Facility Flow Diagram.

(Sheet 16 of 23)

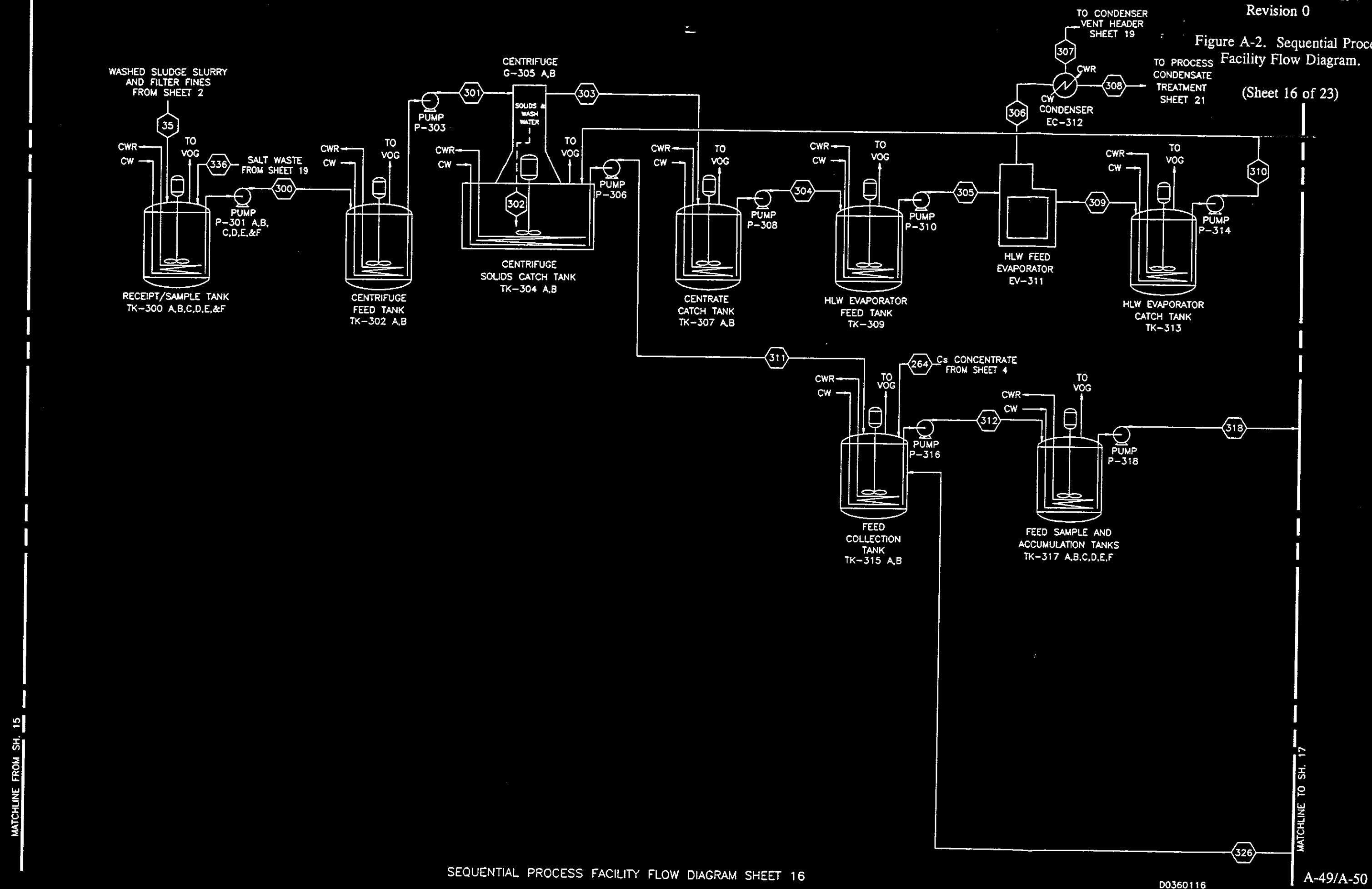

Figure A-2. Sequential Process Facility Flow Diagram.

(Sheet 17 of 23)

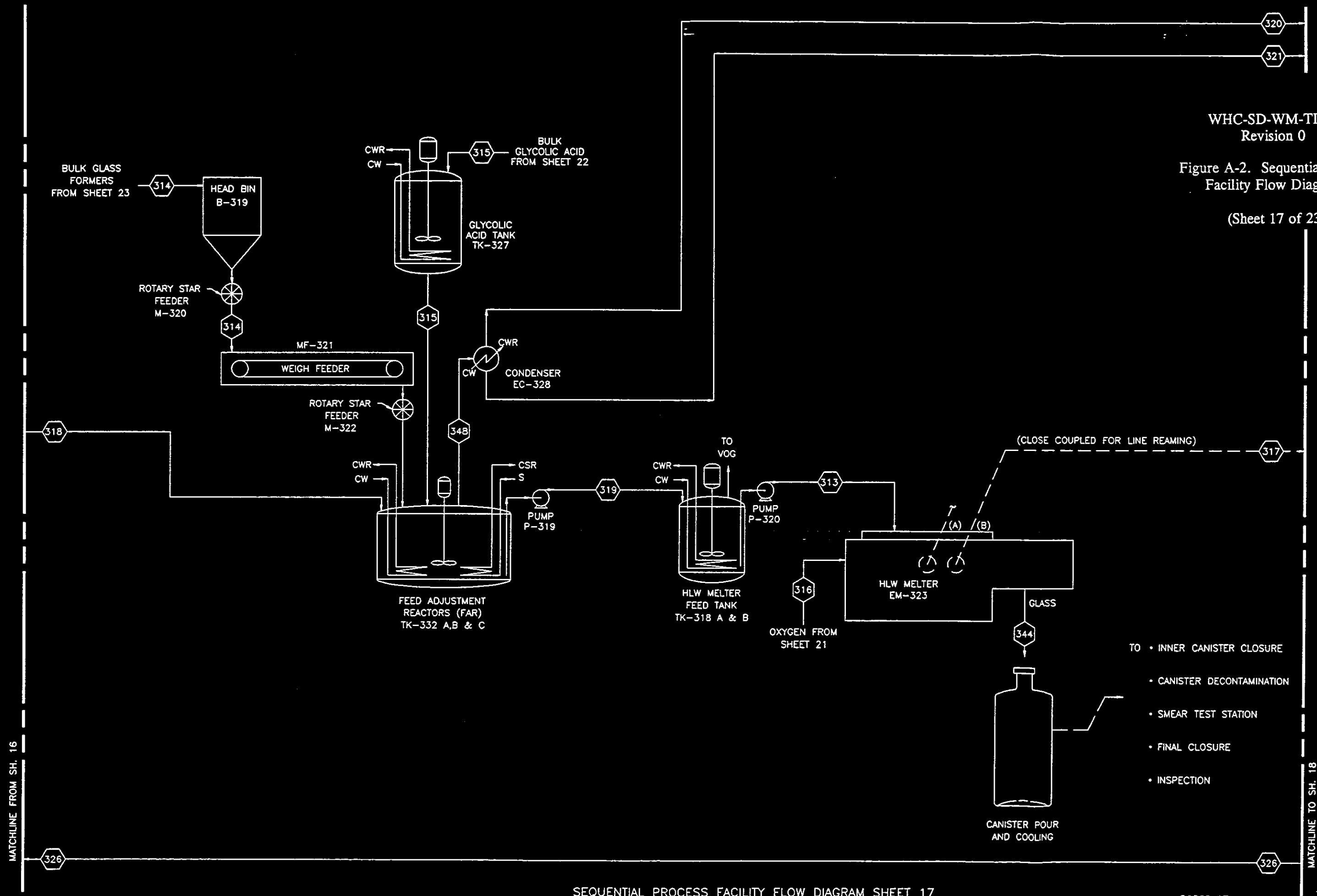

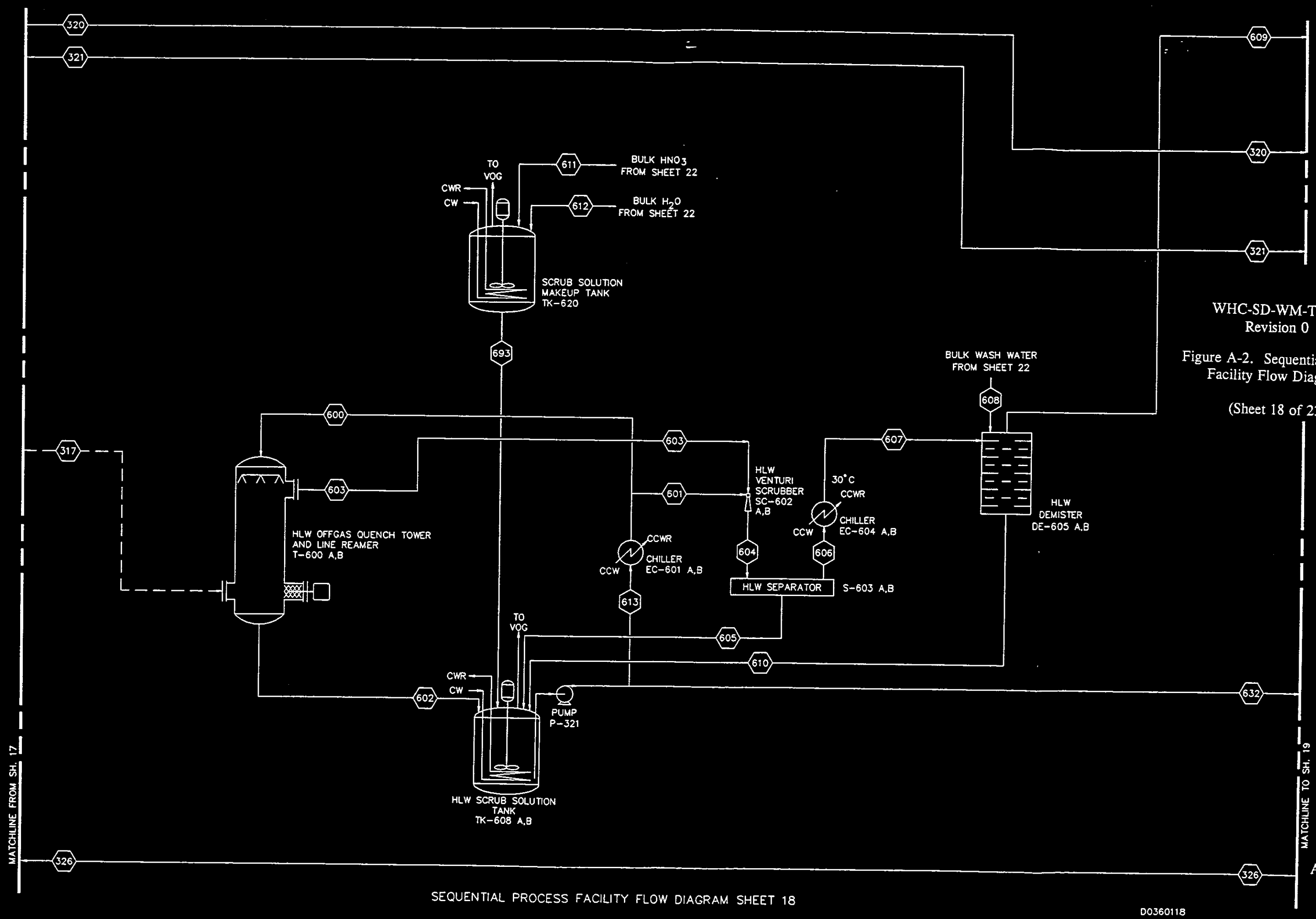

WHC-SD-WM-TI-694
Revision 0

Figure A-2. Sequential Process Facility Flow Diagram.

(Sheet 18 of 23)

Figure A-2. Sequential Process Facility Flow Diagram.

(Sheet 19 of 23)

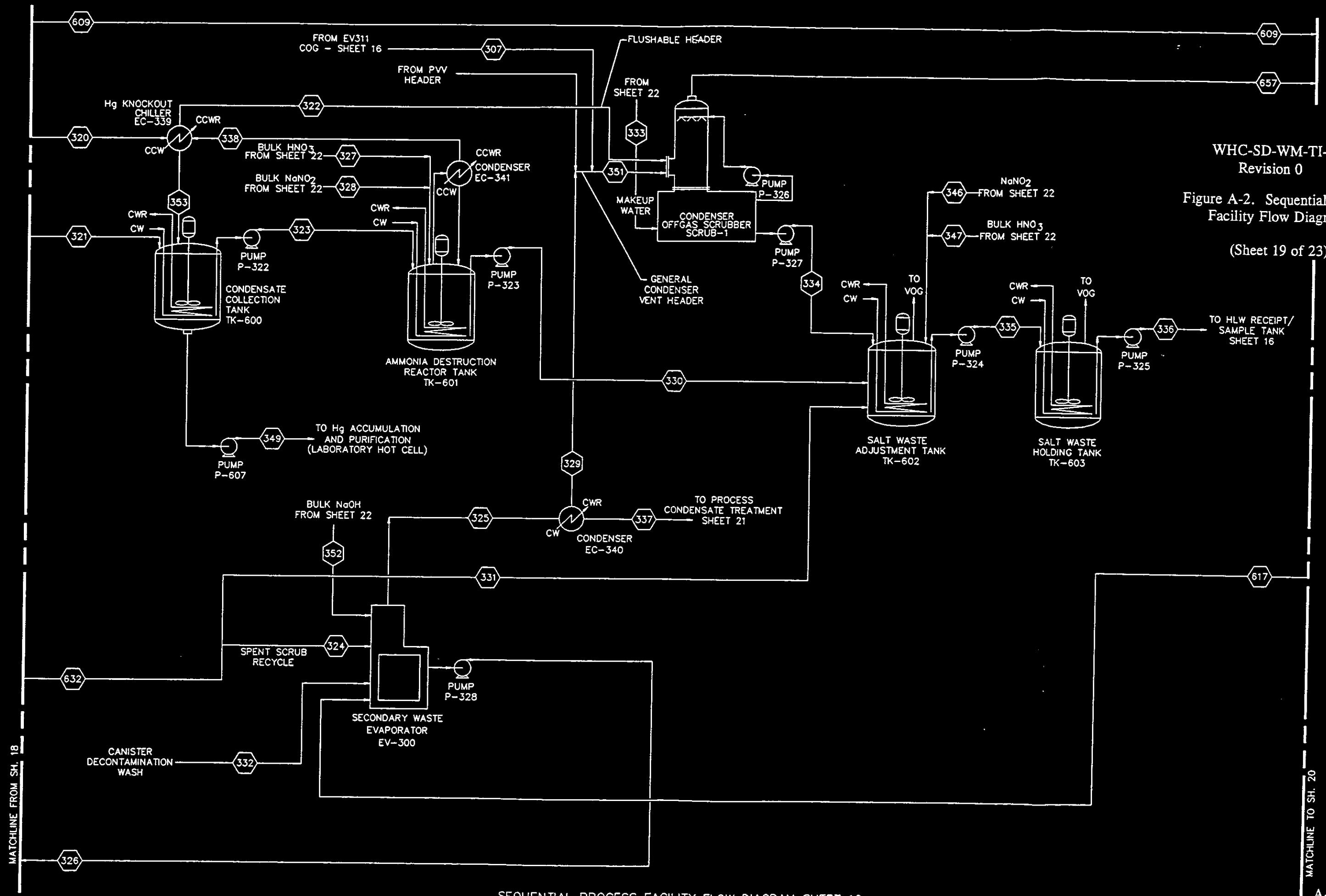

SEQUENTIAL PROCESS FACILITY FLOW DIAGRAM SHEET 19

D0360119

Figure A-2. Sequential Process Facility Flow Diagram.

(Sheet 20 of 23)

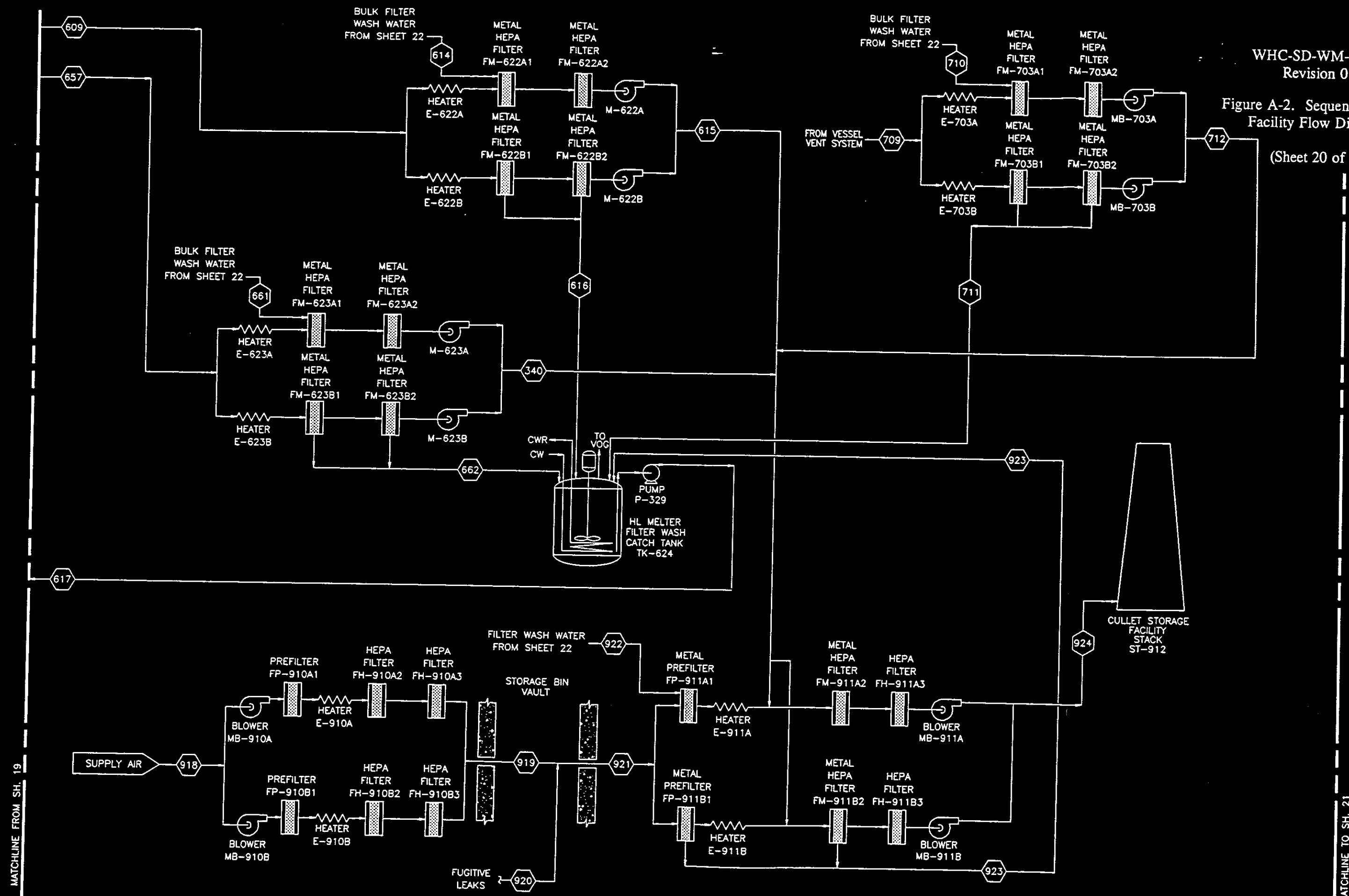

SEQUENTIAL PROCESS FACILITY FLOW DIAGRAM SHEET 20

D0360120

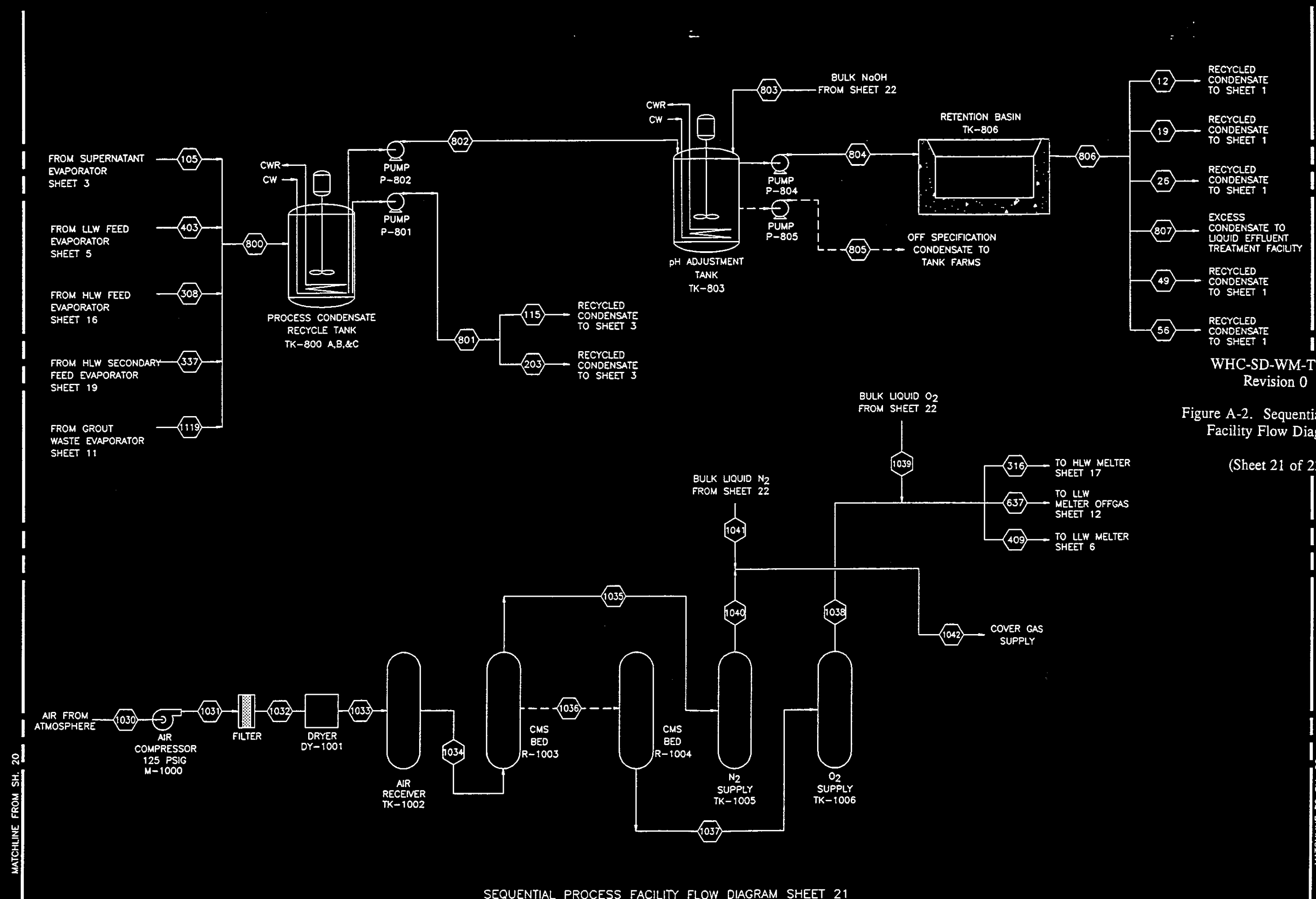

WHC-SD-WM-TI-694
Revision 0

Figure A-2. Sequential Process Facility Flow Diagram.

(Sheet 21 of 23)

Figure A-2. Sequential Process Facility Flow Diagram.

(Sheet 22 of 23)

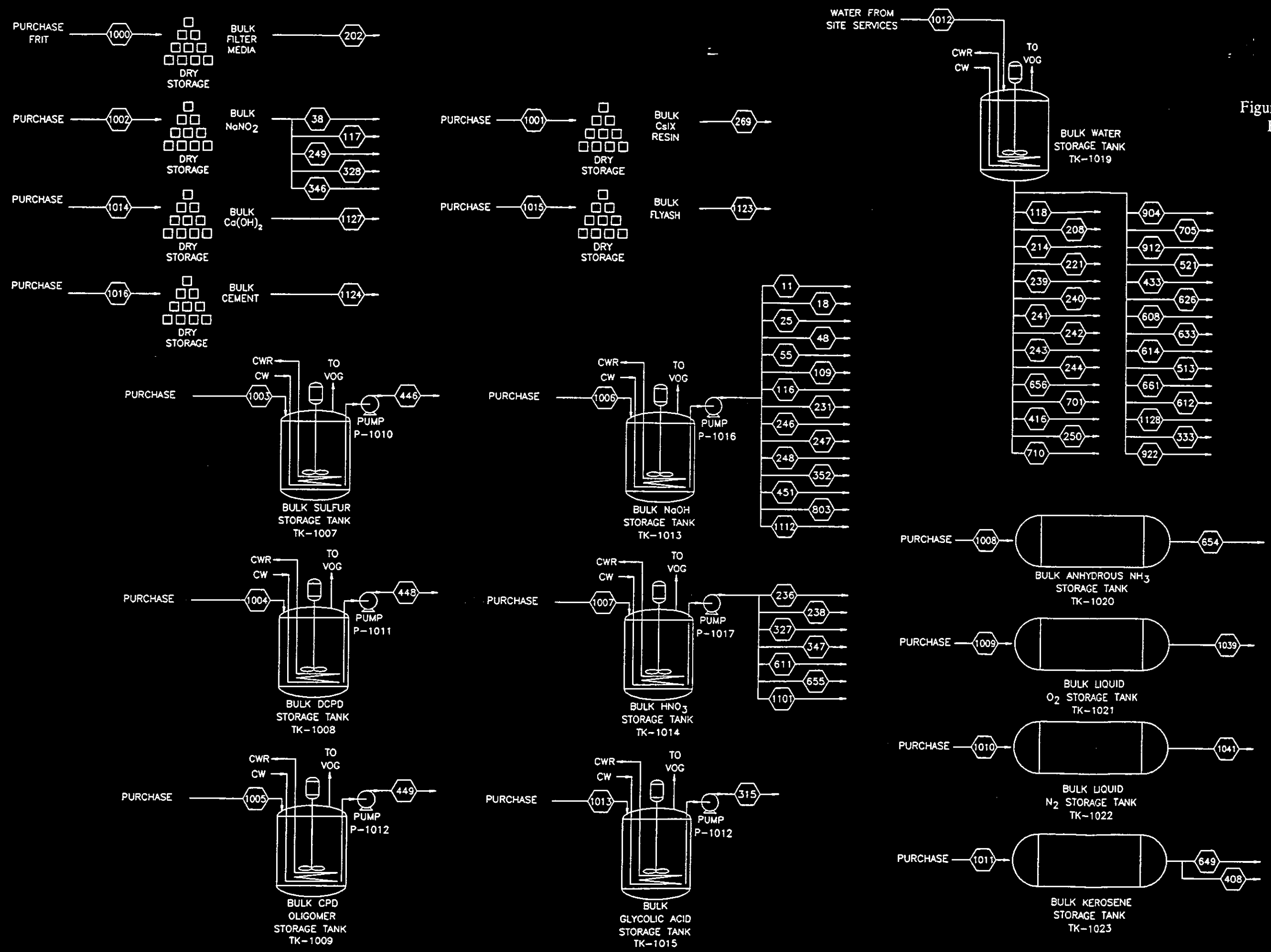

SEQUENTIAL PROCESS FACILITY FLOW DIAGRAM SHEET 22

D0360122

Figure A-2. Sequential Process Facility Flow Diagram.

(Sheet 23 of 23)

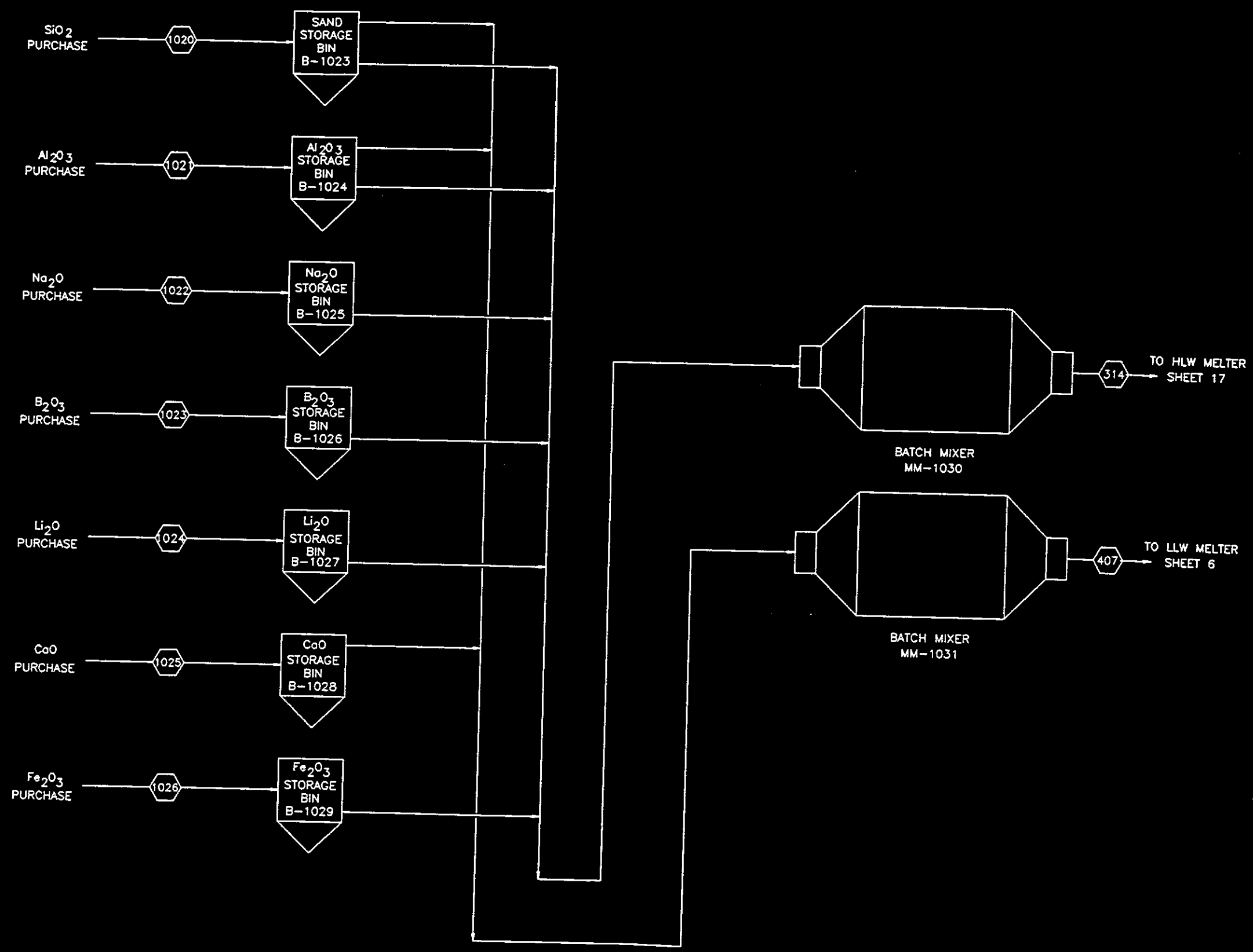

MATCHLINE FROM SH. 22

MATCHLINE FROM SH. 24

SEQUENTIAL PROCESS FACILITY FLOW DIAGRAM SHEET 23

D0360123

14-Feb-96

SLiM Flowsheet - In-Facility Washing
Units of this run are shown below

07:41:53

STREAM NAME	1	2	4	5	11	12	13	16	17	18
LIQUID COMPONENTS										
Total Mass Flow (MT)	7.26E+05	7.26E+05	6.89E+05	4.58E+04	2.74E+04	4.63E+04	7.37E+04	9.90E+04	3.24E+04	6.76E+02
Volume (L)	5.85E+08	5.85E+08	5.55E+08	3.69E+07	1.78E+07	4.63E+07	6.41E+07	7.95E+07	2.61E+07	4.39E+05
Specific Gravity	1.24E+00	1.24E+00	1.24E+00	1.24E+00	1.54E+00	1.00E+00	1.15E+00	1.25E+00	1.25E+00	1.54E+00
Radionuclides (Ci)										
Am-241	7.91E+03	7.91E+03	7.48E+03	4.97E+02		5.95E-05	5.95E-05	4.10E+02	1.34E+02	
C-14	3.32E+03	3.32E+03	3.14E+03	2.08E+02		2.49E-05	2.49E-05	1.72E+02	5.64E+01	
Cs-137	3.18E+07	3.18E+07	3.01E+07	2.00E+06		5.15E-02	5.15E-02	1.65E+06	5.40E+05	
Ba-137	3.02E+07	3.02E+07	2.86E+07	1.90E+06		4.89E-02	4.89E-02	1.57E+06	5.13E+05	
Np-237	6.97E+00	6.97E+00	6.59E+00	4.38E-01		5.24E-08	5.24E-08	3.61E-01	1.18E-01	
Pu-239	1.65E+03	1.65E+03	1.56E+03	1.04E+02		1.24E-05	1.24E-05	8.56E+01	2.80E+01	
Pu-240	4.31E+02	4.31E+02	4.08E+02	2.71E+01		3.24E-06	3.24E-06	2.24E+01	7.33E+00	
Pu-241	4.84E+03	4.84E+03	4.57E+03	3.04E+02		3.64E-05	3.64E-05	2.51E+02	8.22E+01	
Sr-90	1.85E+06	1.85E+06	1.75E+06	1.16E+05		1.39E-02	1.39E-02	9.61E+04	3.15E+04	
Y-90	1.85E+06	1.85E+06	1.75E+06	1.16E+05		1.39E-02	1.39E-02	9.61E+04	3.15E+04	
Tc-99	2.29E+04	2.29E+04	2.16E+04	1.44E+03		3.77E-04	3.77E-04	1.19E+03	3.88E+02	
Total Curies	6.57E+07	6.57E+07	6.21E+07	4.13E+06		1.29E-01	1.29E-01	3.41E+06	1.12E+06	
Chemicals (MT)										
Ag+	3.20E-01	3.20E-01	3.03E-01	2.01E-02		2.41E-09	2.41E-09	1.66E-02	5.44E-03	
Am+3	2.31E-03	2.31E-03	2.18E-03	1.45E-04		1.73E-11	1.73E-11	1.20E-04	3.92E-05	
As+5	4.05E-05	4.05E-05	3.83E-05	2.55E-06		3.05E-13	3.05E-13	2.10E-06	6.89E-07	
B+3	3.43E-02	3.43E-02	3.24E-02	2.16E-03		2.58E-10	2.58E-10	1.78E-03	5.83E-04	
Ba+2	7.91E-01	7.91E-01	7.48E-01	4.97E-02		5.94E-09	5.94E-09	4.10E-02	1.34E-02	
Be+2	2.43E-05	2.43E-05	2.30E-05	1.53E-06		1.83E-13	1.83E-13	1.26E-06	4.13E-07	
Bi+3	1.18E+01	1.18E+01	1.12E+01	7.42E-01		8.88E-08	8.88E-08	6.13E-01	2.01E-01	
Ca+2	1.65E+01	1.65E+01	1.56E+01	1.04E+00		1.65E-05	1.65E-05	8.55E-01	2.80E-01	
Cd+2	7.63E+00	7.63E+00	7.22E+00	4.80E-01		8.06E-08	8.06E-08	3.96E-01	1.30E-01	
Ce+3	2.36E+00	2.36E+00	2.24E+00	1.49E-01		1.78E-08	1.78E-08	1.23E-01	4.02E-02	
Cm+3	9.51E-08	9.51E-08	8.99E-08	5.97E-09		7.15E-16	7.15E-16	4.93E-09	1.62E-09	
Co+3	1.46E-03	1.46E-03	1.38E-03	9.17E-05		1.10E-11	1.10E-11	7.57E-05	2.48E-05	
Cs+	1.83E+00	1.83E+00	1.73E+00	1.15E-01		2.97E-09	2.97E-09	9.50E-02	3.11E-02	
Cu+2	9.89E-02	9.89E-02	9.36E-02	6.22E-03		7.44E-10	7.44E-10	5.13E-03	1.68E-03	
Fe+2	1.19E-03	1.19E-03	1.13E-03	7.49E-05		8.96E-12	8.96E-12	6.18E-05	2.03E-05	
Fe+3	3.44E+01	3.44E+01	3.25E+01	2.16E+00		2.59E-07	2.59E-07	1.78E+00	5.85E-01	
H+										
Hg+2	5.84E-02	5.84E-02	5.52E-02	3.67E-03		4.39E-10	4.39E-10	3.03E-03	9.92E-04	
K+	7.07E+02	7.07E+02	6.69E+02	4.44E+01		5.34E-06	5.34E-06	3.67E+01	1.20E+01	
La+3	2.39E-01	2.39E-01	2.26E-01	1.50E-02		1.79E-09	1.79E-09	1.24E-02	4.06E-03	
Mg+2	1.46E-04	1.46E-04	1.38E-04	9.17E-06		1.10E-12	1.10E-12	7.57E-06	2.48E-06	
Mn+2	4.85E-05	4.85E-05	4.58E-05	3.05E-06		3.64E-13	3.64E-13	2.51E-06	8.24E-07	
Mn+4	1.08E+01	1.08E+01	1.02E+01	6.79E-01		8.12E-08	8.12E-08	5.60E-01	1.84E-01	
Mo+6	7.23E-03	7.23E-03	6.84E-03	4.54E-04		5.67E-11	5.67E-11	3.75E-04	1.23E-04	
Na+	6.80E+04	6.80E+04	6.44E+04	4.28E+03	7.87E+03	1.72E-03	7.87E+03	9.68E+03	3.17E+03	1.94E+02
Ni+3	8.21E+00	8.21E+00	7.76E+00	5.16E-01		6.17E-08	6.17E-08	4.26E-01	1.40E-01	
Np+4	9.88E-03	9.88E-03	9.34E-03	6.21E-04		7.43E-11	7.43E-11	5.12E-04	1.68E-04	
Pb+4	9.60E+00	9.60E+00	9.08E+00	6.03E-01		1.01E-07	1.01E-07	4.98E-01	1.63E-01	
Pu+4	2.86E-02	2.86E-02	2.70E-02	1.79E-03		2.15E-10	2.15E-10	1.48E-03	4.85E-04	
Rb+	2.40E-04	2.40E-04	2.27E-04	1.51E-05		1.80E-12	1.80E-12	1.25E-05	4.08E-06	
Re+7	1.08E-04	1.08E-04	1.02E-04	6.79E-06		8.13E-13	8.13E-13	5.61E-06	1.84E-06	
Rh+3	8.50E-04	8.50E-04	8.04E-04	5.34E-05		6.39E-12	6.39E-12	4.41E-05	1.45E-05	
Ru+3	1.18E-03	1.18E-03	1.12E-03	7.44E-05		1.25E-11	1.25E-11	6.14E-05	2.01E-05	
Se+6	1.35E-04	1.35E-04	1.28E-04	8.47E-06		2.03E-12	2.03E-12	6.99E-06	2.29E-06	
Si+4	1.59E+01	1.59E+01	1.51E+01	1.00E+00		1.20E-07	1.20E-07	8.26E-01	2.71E-01	
Sr+2	3.80E-01	3.80E-01	3.60E-01	2.39E-02		2.86E-09	2.86E-09	1.97E-02	6.46E-03	
Te+6	8.27E-04	8.27E-04	7.82E-04	5.19E-05		8.73E-12	8.73E-12	4.29E-05	1.41E-05	
UO2+2	1.06E+02	1.06E+02	1.00E+02	6.66E+00		7.97E-07	7.97E-07	5.50E+00	1.80E+00	
Zr+2	7.78E-04	7.78E-04	7.35E-04	4.89E-05		5.84E-12	5.84E-12	4.03E-05	1.32E-05	
Zr+4	2.43E-05	2.43E-05	2.30E-05	1.53E-06		1.83E-13	1.83E-13	1.26E-06	4.13E-07	
Al(OH)4-	6.99E+03	6.99E+03	6.66E+03	4.42E+02		9.40E-05	9.40E-05	4.55E+03	1.49E+03	
BO2-			9.28E-12	6.16E-13		2.77E-10	2.77E-10	2.15E-10	7.03E-11	
Cl-	6.78E+02	6.78E+02	6.41E+02	4.26E+01		3.90E-05	3.90E-05	3.52E+01	1.15E+01	
CO3-2	3.10E+03	3.10E+03	2.94E+03	1.95E+02		4.37E-06	4.37E-06	1.61E+02	5.27E+01	
Cr(OH)4-	4.46E+02	4.46E+02	4.24E+02	2.82E+01		5.12E-06	5.12E-06	2.02E+02	6.60E+01	
F-	1.14E+03	1.14E+03	1.08E+03	7.14E+01		1.93E-05	1.93E-05	5.90E+01	1.93E+01	
I-	9.03E-02	9.03E-02	8.54E-02	5.67E-03		1.47E-08	1.47E-08	4.68E-03	1.53E-03	
NO2-	9.47E+03	9.47E+03	8.96E+03	5.95E+02		7.16E-05	7.16E-05	4.91E+02	1.61E+02	
NO3-	1.07E+05	1.07E+05	1.01E+05	6.69E+03		1.92E-03	1.92E-03	5.52E+03	1.81E+03	
OH-	1.43E+04	1.43E+04	1.36E+04	9.05E+02	5.82E+03	1.54E-04	5.82E+03	3.97E+03	1.30E+03	1.44E+02
PO4-3	3.20E+03	3.20E+03	3.04E+03	2.02E+02		4.13E-05	4.13E-05	1.20E+03	3.93E+02	
SO4-2	2.02E+03	2.02E+03	1.91E+03	1.27E+02		1.52E-05	1.52E-05	1.05E+02	3.44E+01	
TcO4-	2.21E+00	2.21E+00	2.09E+00	1.39E-01		3.65E-08	3.65E-08	1.15E-01	3.76E-02	
H2O	5.08E+05	5.08E+05	4.83E+05	3.21E+04	1.37E+04	4.63E+04	6.00E+04	7.29E+04	2.39E+04	3.38E+02
Organic Carbon	1.06E+03	1.06E+03	1.00E+03	6.64E+01		2.27E-05	2.27E-05	5.48E+01	1.80E+01	
ZrO2:2H2O	7.53E+00	7.53E+00	7.12E+00	4.73E-01		5.66E-08	5.66E-08	3.91E-01	1.28E-01	
Hg			4.69E-10	3.11E-11		1.40E-08	1.40E-08	1.08E-08	3.54E-09	
TcO2										
Cl2										
CO										
CO2			4.45E-07	2.96E-08		1.33E-05	1.33E-05	1.03E-05	3.37E-06	
F2										
H2										
I2										
N2										
N2O										
NO										
NO2										
O2										
SO2										
Dicyclopentadiene										
Glycolic Anion			4.53E-10	3.01E-11		1.35E-08	1.35E-08	1.05E-08	3.43E-09	
H2S										
Glycolic Acid										
Kerosene										
NH3										
Oligomer										
Sulfur										

STREAM NAME	1	2	4	5	11	12	13	16	17	18
SOLID COMPONENTS										
Total Mass Flow (MT)	1.97E+04	1.97E+04	6.89E+01	1.96E+04				9.90E+00	1.39E+04	
Radionuclides (Ci)										
Am-241	9.65E+04	9.65E+04	3.38E+02	9.61E+04				6.84E+01	9.61E+04	
C-14	2.18E+03	2.18E+03	7.64E+00	2.18E+03				1.55E+00	2.17E+03	
Cs-137	3.01E+06	3.01E+06	1.05E+04	3.00E+06				2.13E+03	3.00E+06	
Ba-137	2.86E+06	2.86E+06	1.00E+04	2.85E+06				2.03E+03	2.85E+06	
Np-237	6.27E+01	6.27E+01	2.19E-01	6.25E+01				4.44E-02	6.24E+01	
Pu-239	2.53E+04	2.53E+04	8.86E+01	2.52E+04				1.79E+01	2.52E+04	
Pu-240	6.28E+03	6.28E+03	2.20E+01	6.26E+03				4.46E+00	6.26E+03	
Pu-241	7.07E+04	7.07E+04	2.48E+02	7.05E+04				5.02E+01	7.04E+04	
Sr-90	5.10E+07	5.10E+07	1.79E+05	5.08E+07				3.62E+04	5.08E+07	
Y-90	5.10E+07	5.10E+07	1.79E+05	5.08E+07				3.62E+04	5.08E+07	
Tc-99	9.37E+03	9.37E+03	3.28E+01	9.34E+03				6.65E+00	9.33E+03	
Total Curies	1.08E+08	1.08E+08	3.78E+05	1.08E+08				7.66E+04	1.08E+08	
Chemicals (MT)										
Ag+	1.48E+00	1.48E+00	5.18E-03	1.48E+00				1.05E-03	1.48E+00	
Al+3	2.31E+03	2.31E+03	8.09E+00	2.30E+03				5.25E-01	7.37E+02	
Am+3	2.81E-02	2.81E-02	9.85E-05	2.80E-02				1.99E-05	2.80E-02	
As+5	2.26E-03	2.26E-03	7.93E-06	2.26E-03				1.61E-06	2.25E-03	
Ba+2	3.74E+00	3.74E+00	1.31E-02	3.73E+00				2.65E-03	3.73E+00	
Be+2	3.08E-03	3.08E-03	1.08E-05	3.07E-03				2.18E-06	3.06E-03	
Bi+3	2.52E+02	2.52E+02	8.81E-01	2.51E+02				1.78E-01	2.51E+02	
Ca+2	1.45E+02	1.45E+02	5.07E-01	1.44E+02				1.03E-01	1.44E+02	
Cd+2	6.55E+00	6.55E+00	2.29E-02	6.53E+00				4.65E-03	6.53E+00	
Ce+3	2.35E+02	2.35E+02	8.23E-01	2.34E+02				1.67E-01	2.34E+02	
Cm+3	1.76E-05	1.76E-05	6.15E-08	1.75E-05				1.25E-08	1.75E-05	
Co+3	1.49E-06	1.49E-06	5.20E-09	1.48E-06				1.05E-09	1.48E-06	
Cr+3	1.60E+02	1.60E+02	5.60E-01	1.59E+02				4.08E-02	5.73E+01	
Cs+	2.01E-01	2.01E-01	7.03E-04	2.00E-01				1.42E-04	2.00E-01	
Cu+2	1.88E-01	1.88E-01	6.60E-04	1.88E-01				1.34E-04	1.88E-01	
Fe+3	7.62E+02	7.62E+02	2.67E+00	7.60E+02				5.41E-01	7.59E+02	
Hg+2	8.81E-02	8.81E-02	3.09E-04	8.78E-02				6.25E-05	8.78E-02	
K+	2.96E+01	2.96E+01	1.04E-01	2.95E+01				2.10E-02	2.95E+01	
La+3	2.30E+01	2.30E+01	8.03E-02	2.29E+01				1.63E-02	2.29E+01	
Mg+2	8.25E+00	8.25E+00	2.89E-02	8.22E+00				5.85E-03	8.22E+00	
Mn+4	1.80E+02	1.80E+02	6.30E-01	1.79E+02				1.28E-01	1.79E+02	
Mo+6	3.21E-02	3.21E-02	1.13E-04	3.20E-02				2.28E-05	3.20E-02	
Na+	7.77E+02	7.77E+02	2.72E+00	7.75E+02				4.14E-01	5.81E+02	
Ni+3	2.06E+02	2.06E+02	7.22E-01	2.06E+02				1.46E-01	2.05E+02	
Np+4	8.89E-02	8.89E-02	3.11E-04	8.86E-02				6.30E-05	8.85E-02	
Pb+4	2.93E+01	2.93E+01	1.03E-01	2.92E+01				2.08E-02	2.92E+01	
Pu+4	4.36E-01	4.36E-01	1.53E-03	4.35E-01				3.10E-04	4.35E-01	
Rh+3	1.93E-01	1.93E-01	6.75E-04	1.92E-01				1.37E-04	1.92E-01	
Se+6	3.31E+00	3.31E+00	1.16E-02	3.30E+00				2.35E-03	3.30E+00	
Si+4	2.32E+02	2.32E+02	8.11E-01	2.31E+02				1.64E-01	2.31E+02	
Sr+2	3.66E+01	3.66E+01	1.28E-01	3.64E+01				2.59E-02	3.64E+01	
Th+4	2.79E+00	2.79E+00	9.77E-03	2.78E+00				1.98E-03	2.78E+00	
Ti+4	1.55E-01	1.55E-01	5.42E-04	1.54E-01				1.10E-04	1.54E-01	
UO2+2	1.54E+03	1.54E+03	5.41E+00	1.54E+03				1.10E+00	1.54E+03	
Zn+2	5.06E-01	5.06E-01	1.77E-03	5.05E-01				3.59E-04	5.04E-01	
Cl-	9.00E+00	9.00E+00	3.15E-02	8.97E+00				6.38E-03	8.96E+00	
CO3-2	1.09E+02	1.09E+02	3.81E-01	1.09E+02				7.73E-02	1.09E+02	
F-	6.82E+01	6.82E+01	2.39E-01	6.80E+01				4.84E-02	6.79E+01	
I-	1.40E-03	1.40E-03	4.89E-06	1.39E-03				9.90E-07	1.39E-03	
NO2-	6.18E+01	6.18E+01	2.16E-01	6.16E+01				4.38E-02	6.15E+01	
NO3-	9.85E+02	9.85E+02	3.45E+00	9.82E+02				6.99E-01	9.81E+02	
OH-	5.63E+03	5.63E+03	1.97E+01	5.61E+03				2.23E+00	3.14E+03	
PO4-3	1.85E+03	1.85E+03	6.47E+00	1.84E+03				3.41E-01	4.79E+02	
SO4-2	2.56E+01	2.56E+01	8.95E-02	2.55E+01				1.81E-02	2.55E+01	
TcO4-	9.08E-01	9.08E-01	3.18E-03	9.04E-01				6.44E-04	9.04E-01	
Cancrinite	2.71E+03	2.71E+03	9.47E+00	2.70E+03				1.92E+00	2.69E+03	
H2O										
MnO2										
Organic Carbon	8.73E+01	8.73E+01	3.06E-01	8.70E+01				6.19E-02	8.69E+01	
ZrO2:2H2O	1.20E+03	1.20E+03	4.19E+00	1.19E+03				8.48E-01	1.19E+03	
Ag2O										
AlPO4										
Al2O3										
Am2O3										
As2O5										
B2O3										
BaO										
BeO										
Bi2O3										
CaO										
CdO										
Ce2O3										
Cm2O3										
Co2O3										
Cr2O3										
Cs2O										
CuO										
Fe2O3										
FeO										
HgO										
K2O										
La2O3										
Li2O										
MgO										
MnO										
MoO3										
Na2O										

STREAM NAME	1	2	4	5	11	12	13	16	17	18
SOLID COMPONENTS										
Chemicals Continued (MT)										
Ni_2O_3										
NpO_2										
PbO_2										
PuO_2										
Rb_2O										
Re_2O_7										
Rh_2O_3										
Ru_2O_3										
SeO_3										
SiO_2										
SO_3										
SrO										
Tc_2O_7										
TeO_3										
ThO_2										
TiO_2										
UO_3										
ZrO										
ZrO_2										
Cement										
Cu										
$CuSO_4$										
Dicyclopentadiene										
Flyash										
Oligomer										
Na Loaded Resin										
Sulfur										

STREAM NAME	19	20	23	24	25	26	27	34	35	38
LIQUID COMPONENTS										
Total Mass Flow (MT)	8.42E+04	8.49E+04	9.12E+04	3.24E+04	2.69E+04	6.57E+04	9.26E+04	1.27E+05	1.27E+05	6.50E+01
Volume (L)	8.42E+07	8.47E+07	8.47E+07	3.12E+07	1.75E+07	6.57E+07	8.32E+07	1.26E+08	1.26E+08	1.71E+04
Specific Gravity	1.00E+00	1.00E+00	1.08E+00	1.04E+00	1.54E+00	1.00E+00	1.11E+00	1.01E+00	1.01E+00	3.80E+00
Radionuclides (Ci)										
Am-241	1.08E-04	1.08E-04	1.28E+02	5.42E+01		8.43E-05	8.43E-05	5.35E+01	5.35E+01	
C-14	4.53E-05	4.53E-05	5.37E+01	2.27E+01		3.54E-05	3.54E-05	2.24E+01	2.24E+01	
Cs-137	9.36E-02	9.36E-02	5.14E+05	2.18E+05		7.31E-02	7.31E-02	2.15E+05	2.15E+05	
Ba-137	8.90E-02	8.90E-02	4.88E+05	2.07E+05		6.94E-02	6.94E-02	2.04E+05	2.04E+05	
Np-237	9.52E-08	9.52E-08	1.13E-01	4.77E-02		7.43E-08	7.43E-08	4.71E-02	4.71E-02	
Pu-239	2.25E-05	2.25E-05	2.67E+01	1.13E+01		1.76E-05	1.76E-05	1.12E+01	1.12E+01	
Pu-240	5.89E-06	5.89E-06	6.98E+00	2.95E+00		4.60E-06	4.60E-06	2.92E+00	2.92E+00	
Pu-241	6.61E-05	6.61E-05	7.83E+01	3.31E+01		5.16E-05	5.16E-05	3.27E+01	3.27E+01	
Sr-90	2.53E-02	2.53E-02	3.00E+04	1.27E+04		1.98E-02	1.98E-02	1.25E+04	1.25E+04	
Y-90	2.53E-02	2.53E-02	3.00E+04	1.27E+04		1.98E-02	1.98E-02	1.25E+04	1.25E+04	
Tc-99	6.86E-04	6.86E-04	3.70E+02	1.57E+02		5.35E-04	5.35E-04	1.54E+02	1.54E+02	
Total Curies	2.34E-01	2.34E-01	1.06E+06	4.50E+05		1.83E-01	1.83E-01	4.44E+05	4.44E+05	
Chemicals (MT)										
Ag+	4.38E-09	4.38E-09	5.18E-03	2.19E-03		3.41E-09	3.41E-09	2.16E-03	2.16E-03	
Am+3	3.15E-11	3.15E-11	3.73E-05	1.58E-05		2.46E-11	2.46E-11	1.56E-05	1.56E-05	
As+5	5.54E-13	5.54E-13	6.56E-07	2.78E-07		4.32E-13	4.32E-13	2.74E-07	2.74E-07	
B+3	4.69E-10	4.69E-10	5.55E-04	2.35E-04		3.66E-10	3.66E-10	2.32E-04	2.32E-04	
Ba+2	1.08E-08	1.08E-08	1.28E-02	5.41E-03		8.43E-09	8.43E-09	5.34E-03	5.34E-03	
Be+2	3.32E-13	3.32E-13	3.93E-07	1.66E-07		2.59E-13	2.59E-13	1.64E-07	1.64E-07	
Bi+3	1.61E-07	1.61E-07	1.91E-01	8.09E-02		1.26E-07	1.26E-07	7.98E-02	7.98E-02	
Ca+2	3.01E-05	3.01E-05	2.67E-01	1.13E-01		2.35E-05	2.35E-05	1.11E-01	1.11E-01	
Cd+2	1.47E-07	1.47E-07	1.24E-01	5.23E-02		1.14E-07	1.14E-07	5.16E-02	5.16E-02	
Ce+3	3.23E-08	3.23E-08	3.83E-02	1.62E-02		2.52E-08	2.52E-08	1.60E-02	1.60E-02	
Cm+3	1.30E-15	1.30E-15	1.54E-09	6.51E-10		1.01E-15	1.01E-15	6.43E-10	6.43E-10	
Co+3	2.00E-11	2.00E-11	2.36E-05	1.00E-05		1.56E-11	1.56E-11	9.87E-06	9.87E-06	
Cs+	5.40E-09	5.40E-09	2.96E-02	1.26E-02		4.21E-09	4.21E-09	1.24E-02	1.24E-02	
Cu+2	1.35E-09	1.35E-09	1.60E-03	6.78E-04		1.06E-09	1.06E-09	6.69E-04	6.69E-04	
Fe+2	1.63E-11	1.63E-11	1.93E-05	8.17E-06		1.27E-11	1.27E-11	8.06E-06	8.06E-06	
Fe+3	4.70E-07	4.70E-07	5.57E-01	2.36E-01		3.67E-07	3.67E-07	2.32E-01	2.32E-01	
H+										
Hg+2	7.98E-10	7.98E-10	9.45E-04	4.00E-04		6.22E-10	6.22E-10	3.95E-04	3.95E-04	
K+	9.71E-06	9.71E-06	1.14E+01	4.84E+00		7.58E-06	7.58E-06	4.78E+00	4.78E+00	
La+3	3.26E-09	3.26E-09	3.86E-03	1.63E-03		2.54E-09	2.54E-09	1.61E-03	1.61E-03	
Mg+2	2.00E-12	2.00E-12	2.36E-06	1.00E-06		1.56E-12	1.56E-12	9.87E-07	9.87E-07	
Mn+2	6.62E-13	6.62E-13	7.84E-07	3.32E-07		5.17E-13	5.17E-13	3.28E-07	3.28E-07	
Mn+4	1.48E-07	1.48E-07	1.75E-01	7.40E-02		1.15E-07	1.15E-07	7.30E-02	7.30E-02	
Mo+6	1.03E-10	1.03E-10	1.17E-04	4.95E-05		8.04E-11	8.04E-11	4.89E-05	4.89E-05	
Na+	3.13E-03	1.94E+02	3.62E+03	2.58E+02	7.72E+03	2.44E-03	7.72E+03	5.53E+02	5.53E+02	2.18E+01
Ni+3	1.12E-07	1.12E-07	1.33E-01	5.62E-02		8.75E-08	8.75E-08	5.55E-02	5.55E-02	
Np+4	1.35E-10	1.35E-10	1.60E-04	6.77E-05		1.05E-10	1.05E-10	6.68E-05	6.68E-05	
Pb+4	1.84E-07	1.84E-07	1.55E-01	6.58E-02		1.44E-07	1.44E-07	6.49E-02	6.49E-02	
Pu+4	3.90E-10	3.90E-10	4.62E-04	1.96E-04		3.04E-10	3.04E-10	1.93E-04	1.93E-04	
Rb+	3.28E-12	3.28E-12	3.88E-06	1.64E-06		2.56E-12	2.56E-12	1.62E-06	1.62E-06	
Re+7	1.48E-12	1.48E-12	1.75E-06	7.41E-07		1.15E-12	1.15E-12	7.31E-07	7.31E-07	
Rh+3	1.16E-11	1.16E-11	1.38E-05	5.82E-06		9.06E-12	9.06E-12	5.75E-06	5.75E-06	
Ru+3	2.27E-11	2.27E-11	1.92E-05	8.11E-06		1.77E-11	1.77E-11	8.00E-06	8.00E-06	
Se+6	3.69E-12	3.69E-12	2.18E-06	9.23E-07		2.88E-12	2.88E-12	9.11E-07	9.11E-07	
Si+4	2.18E-07	2.18E-07	2.58E-01	1.09E-01		1.70E-07	1.70E-07	1.08E-01	1.08E-01	
Sr+2	5.20E-09	5.20E-09	6.15E-03	2.61E-03		4.06E-09	4.06E-09	2.57E-03	2.57E-03	
Te+6	1.59E-11	1.59E-11	1.34E-05	5.66E-06		1.24E-11	1.24E-11	5.59E-06	5.59E-06	
UO2+2	1.43E-06	1.43E-06	1.72E+00	7.26E-01		1.13E-06	1.13E-06	7.16E-01	7.16E-01	
Zn+2	1.06E-11	1.06E-11	1.26E-05	5.33E-06		8.29E-12	8.29E-12	5.25E-06	5.25E-06	
Zr+4	3.32E-13	3.32E-13	3.93E-07	1.66E-07		2.59E-13	2.59E-13	1.64E-07	1.64E-07	
Al(OH)4-	1.71E-04	1.71E-04	1.42E+03	1.47E+02		1.33E-04	1.33E-04	8.56E+01	8.56E+01	
BO2-	5.04E-10	5.04E-10	6.69E-11	5.14E-10		3.93E-10	3.93E-10	1.06E-09	1.06E-09	
Cl-	7.09E-05	7.09E-05	1.10E+01	4.65E+00		5.53E-05	5.53E-05	4.58E+00	4.58E+00	
CO3-2	7.95E-06	7.95E-06	5.02E+01	2.13E+01		6.20E-06	6.20E-06	2.10E+01	2.10E+01	
Cr(OH)4-	9.31E-06	9.31E-06	6.29E+01	7.28E+00		7.27E-06	7.27E-06	4.65E+00	4.65E+00	
F-	3.50E-05	3.50E-05	1.84E+01	7.79E+00		2.73E-05	2.73E-05	7.68E+00	7.68E+00	
I-	2.67E-08	2.67E-08	1.46E-03	6.18E-04		2.08E-08	2.08E-08	6.10E-04	6.10E-04	
NO2-	1.30E-04	1.30E-04	1.53E+02	6.49E+01		1.02E-04	1.02E-04	1.07E+02	1.07E+02	4.32E+01
NO3-	3.48E-03	3.48E-03	1.72E+03	7.29E+02		2.72E-03	2.72E-03	7.20E+02	7.20E+02	
OH-	2.79E-04	1.44E+02	1.47E+03	1.27E+02	5.71E+03	2.18E-04	5.71E+03	3.46E+02	3.46E+02	
PO4-3	7.51E-05	7.51E-05	3.74E+02	4.64E+01		5.86E-05	5.86E-05	3.11E+01	3.11E+01	
SO4-2	2.77E-05	2.77E-05	3.27E+01	1.38E+01		2.16E-05	2.16E-05	1.37E+01	1.37E+01	
TcO4-	6.64E-08	6.64E-08	3.58E-02	1.52E-02		5.18E-08	5.18E-08	1.50E-02	1.50E-02	
H2O	8.42E+04	8.46E+04	8.22E+04	3.10E+04	1.34E+04	6.57E+04	7.91E+04	1.25E+05	1.25E+05	
Organic Carbon	4.13E-05	4.13E-05	1.71E+01	7.24E+00		3.22E-05	3.22E-05	7.14E+00	7.14E+00	
ZrO2:2H2O	1.03E-07	1.03E-07	1.22E-01	5.16E-02		8.03E-08	8.03E-08	5.09E-02	5.09E-02	
Hg	2.54E-08	2.54E-08	3.37E-09	2.59E-08		1.98E-08	1.98E-08	5.33E-08	5.33E-08	
TcO2										
Cl2										
CO										
CO2	2.42E-05	2.42E-05	3.21E-06	2.47E-05		1.89E-05	1.89E-05	5.08E-05	5.08E-05	
F2										
H2										
I2										
N2										
N2O										
NO										
NO2										
O2										
SO2										
Dicyclopentadiene										
Glycolic Anion	2.46E-08	2.46E-08	3.26E-09	2.51E-08		1.92E-08	1.92E-08	5.16E-08	5.16E-08	
H2S										
Glycolic Acid										
Kerosene										
NES										
Oligomer										
Sulfur										

STREAM NAME	19	20	23	24	25	26	27	34	35	38
SOLID COMPONENTS										
Total Mass Flow (MT)			9.12E+00	1.39E+04				1.40E+04	1.40E+04	
Radionuclides (Ci)										
Am-241			6.30E+01	9.60E+04				9.64E+04	9.64E+04	
C-14			1.43E+00	2.17E+03				2.18E+03	2.18E+03	
Cs-137			1.97E+03	2.99E+06				3.01E+06	3.01E+06	
Ba-137			1.87E+03	2.84E+06				2.86E+06	2.86E+06	
Np-237			4.09E-02	6.24E+01				6.27E+01	6.27E+01	
Pu-239			1.65E+01	2.52E+04				2.53E+04	2.53E+04	
Pu-240			4.10E+00	6.25E+03				6.28E+03	6.28E+03	
Pu-241			4.62E+01	7.04E+04				7.07E+04	7.07E+04	
Sr-90			3.33E+04	5.07E+07				5.10E+07	5.10E+07	
Y-90			3.33E+04	5.07E+07				5.10E+07	5.10E+07	
Tc-99			6.12E+00	9.33E+03				9.37E+03	9.37E+03	
Total Curies			7.06E+04	1.08E+08				1.08E+08	1.08E+08	
Chemicals (MT)										
Ag+			9.67E-04	1.47E+00				1.48E+00	1.48E+00	
Al+3			4.83E-01	7.36E+02				7.45E+02	7.45E+02	
Am+3			1.84E-05	2.80E-02				2.81E-02	2.81E-02	
As+5			1.48E-06	2.25E-03				2.26E-03	2.26E-03	
Ba+2			2.44E-03	3.72E+00				3.74E+00	3.74E+00	
Be+2			2.01E-06	3.06E-03				3.08E-03	3.08E-03	
Bi+3			1.64E-01	2.50E+02				2.52E+02	2.52E+02	
Ca+2			9.46E-02	1.44E+02				1.45E+02	1.45E+02	
Cd+2			4.28E-03	6.52E+00				6.55E+00	6.55E+00	
Ce+3			1.54E-01	2.34E+02				2.35E+02	2.35E+02	
Cm+3			1.15E-08	1.75E-05				1.76E-05	1.76E-05	
Co+3			9.71E-10	1.48E-06				1.49E-06	1.49E-06	
Cr+3			3.76E-02	5.73E+01				5.79E+01	5.79E+01	
Cs+			1.31E-04	2.00E-01				2.01E-01	2.01E-01	
Cu+2			1.23E-04	1.88E-01				1.88E-01	1.88E-01	
Fe+3			4.98E-01	7.59E+02				7.62E+02	7.62E+02	
Hg+2			5.76E-05	8.77E-02				8.81E-02	8.81E-02	
K+			1.93E-02	2.95E+01				2.96E+01	2.96E+01	
La+3			1.50E-02	2.28E+01				2.29E+01	2.29E+01	
Mg+2			5.39E-03	8.21E+00				8.25E+00	8.25E+00	
Mn+4			1.18E-01	1.79E+02				1.80E+02	1.80E+02	
Mo+6			2.10E-05	3.20E-02				3.21E-02	3.21E-02	
Na+			3.81E-01	5.80E+02				5.84E+02	5.84E+02	
Ni+3			1.35E-01	2.05E+02				2.06E+02	2.06E+02	
Np+4			5.81E-05	8.85E-02				8.89E-02	8.89E-02	
Pb+4			1.91E-02	2.92E+01				2.93E+01	2.93E+01	
Pu+4			2.85E-04	4.34E-01				4.36E-01	4.36E-01	
Rh+3			1.26E-04	1.92E-01				1.93E-01	1.93E-01	
Se+6			2.16E-03	3.30E+00				3.31E+00	3.31E+00	
Si+4			1.51E-01	2.31E+02				2.32E+02	2.32E+02	
Sr+2			2.39E-02	3.64E+01				3.66E+01	3.66E+01	
Th+4			1.82E-03	2.78E+00				2.79E+00	2.79E+00	
Ti+4			1.01E-04	1.54E-01				1.55E-01	1.55E-01	
UO2+2			1.01E+00	1.54E+03				1.54E+03	1.54E+03	
Zn+2			3.31E-04	5.04E-01				5.06E-01	5.06E-01	
Cl-			5.88E-03	8.96E+00				9.00E+00	9.00E+00	
CO3-2			7.12E-02	1.08E+02				1.09E+02	1.09E+02	
F-			4.45E-02	6.79E+01				6.82E+01	6.82E+01	
I-			9.11E-07	1.39E-03				1.40E-03	1.40E-03	
NO2-			4.03E-02	6.15E+01				6.18E+01	6.18E+01	
NO3-			6.44E-01	9.81E+02				9.85E+02	9.85E+02	
OH-			2.06E+00	3.14E+03				3.16E+03	3.16E+03	
PO4-3			3.14E-01	4.78E+02				4.85E+02	4.85E+02	
SO4-2			1.67E-02	2.55E+01				2.56E+01	2.56E+01	
TcO4-			5.93E-04	9.03E-01				9.08E-01	9.08E-01	
Cancrinite			1.77E+00	2.69E+03				2.71E+03	2.71E+03	
H2O										
MnO2										
Organic Carbon			5.70E-02	8.69E+01				8.73E+01	8.73E+01	
ZrO2:2H2O			7.81E-01	1.19E+03				1.20E+03	1.20E+03	
Ag2O										
AlPO4										
Al2O3										
Am2O3										
As2O5										
B2O3								1.31E+01	1.31E+01	
BaO										
BeO										
Bi2O3										
CaO								1.51E+00	1.51E+00	
CdO										
Ce2O3										
Cm2O3										
Co2O3										
Cr2O3										
Cs2O										
CuO										
Fe2O3										
FeO										
HgO										
K2O										
La2O3										
Li2O								3.09E+00	3.09E+00	
MgO								1.51E+00	1.51E+00	
MnO										
MoO3										
Na2O										

STREAM NAME	19	20	23	24	25	26	27	34	35	38
SOLID COMPONENTS										
Chemicals Continued (MT)										
Nd_2O_3										
NpO_2										
PbO_2										
PuO_2										
Pr_2O										
Re_2O_7										
Rh_2O_3										
Ru_2O_3										
SeO_3										
SiO_2								4.32E+01	4.32E+01	
SO_3										
SrO										
Tc_2O_7										
TeO_3										
ThO_2										
TiO_2										
UO_3										
ZnO										
ZrO_2										
Cement										
Cu										
$CuSO_4$										
Dicyclopentadiene										
Flyash										
Oligomer										
Na Loaded Resin										
Sulfur										

STREAM NAME	46	47	48	49	50	53	54	55	56	57
LIQUID COMPONENTS										
Total Mass Flow (MT)	9.88E+04	3.24E+04	6.36E+02	7.92E+04	7.99E+04	8.62E+04	3.23E+04	7.51E+02	9.34E+04	9.42E+04
Volume (L)	9.01E+07	2.95E+07	4.13E+05	7.92E+07	7.96E+07	8.32E+07	3.13E+07	4.88E+05	9.34E+07	9.39E+07
Specific Gravity	1.10E+00	1.10E+00	1.54E+00	1.00E+00	1.00E+00	1.04E+00	1.04E+00	1.54E+00	1.00E+00	1.00E+00
Radionuclides (Ci)										
Am-241	7.67E+01	2.52E+01		1.02E-04	1.02E-04	2.33E+01	4.95E+01		1.20E-04	1.20E-04
C-14	3.22E+01	1.05E+01		4.26E-05	4.26E-05	9.77E+00	2.08E+01		5.02E-05	5.02E-05
Cs-137	3.08E+05	1.01E+05		8.81E-02	8.81E-02	9.36E+04	1.99E+05		1.04E-01	1.04E-01
Ba-137	2.93E+05	9.60E+04		8.37E-02	8.37E-02	8.89E+04	1.89E+05		9.86E-02	9.86E-02
Np-237	6.76E-02	2.22E-02		8.95E-08	8.95E-08	2.05E-02	4.36E-02		1.06E-07	1.06E-07
Pu-239	1.60E+01	5.25E+00		2.12E-05	2.12E-05	4.86E+00	1.03E+01		2.50E-05	2.50E-05
Pu-240	4.18E+00	1.37E+00		5.54E-06	5.54E-06	1.27E+00	2.70E+00		6.53E-06	6.53E-06
Pu-241	4.69E+01	1.54E+01		6.22E-05	6.22E-05	1.43E+01	3.03E+01		7.33E-05	7.33E-05
Sr-90	1.80E+04	5.89E+03		2.38E-02	2.38E-02	5.46E+03	1.16E+04		2.81E-02	2.81E-02
Y-90	1.80E+04	5.89E+03		2.38E-02	2.38E-02	5.46E+03	1.16E+04		2.81E-02	2.81E-02
Tc-99	2.22E+02	7.27E+01		6.45E-04	6.45E-04	6.73E+01	1.43E+02		7.60E-04	7.60E-04
Total Curies	6.37E+05	2.09E+05		2.20E-01	2.20E-01	1.94E+05	4.11E+05		2.60E-01	2.60E-01
Chemicals (MT)										
Ag+	3.11E-03	1.02E-03		4.12E-09	4.12E-09	9.43E-04	2.01E-03		4.85E-09	4.85E-09
Am+3	2.24E-05	7.33E-06		2.96E-11	2.96E-11	6.79E-06	1.44E-05		3.49E-11	3.49E-11
As+5	3.93E-07	1.29E-07		5.21E-13	5.21E-13	1.19E-07	2.54E-07		6.14E-13	6.14E-13
B+3	3.33E-04	1.09E-04		4.41E-10	4.41E-10	1.01E-04	2.15E-04		5.20E-10	5.20E-10
Ba+2	7.67E-03	2.51E-03		1.02E-08	1.02E-08	2.33E-03	4.95E-03		1.20E-08	1.20E-08
Be+2	2.36E-07	7.72E-08		3.12E-13	3.12E-13	7.15E-08	1.52E-07		3.68E-13	3.68E-13
Bi+3	1.15E-01	3.76E-02		1.52E-07	1.52E-07	3.48E-02	7.40E-02		1.79E-07	1.79E-07
Ca+2	1.60E-01	5.24E-02		2.83E-05	2.83E-05	4.86E-02	1.03E-01		3.33E-05	3.33E-05
Cd+2	7.40E-02	2.43E-02		1.38E-07	1.38E-07	2.25E-02	4.78E-02		1.62E-07	1.62E-07
Ce+3	2.29E-02	7.52E-03		3.04E-08	3.04E-08	6.96E-03	1.48E-02		3.58E-08	3.58E-08
Cm+3	9.22E-10	3.02E-10		1.22E-15	1.22E-15	2.80E-10	5.95E-10		1.44E-15	1.44E-15
Co+3	1.42E-05	4.64E-06		1.88E-11	1.88E-11	4.30E-06	9.14E-06		2.21E-11	2.21E-11
Cs+	1.78E-02	5.82E-03		5.08E-09	5.08E-09	5.40E-03	1.15E-02		5.99E-09	5.99E-09
Cu+2	9.60E-04	3.15E-04		1.27E-09	1.27E-09	2.91E-04	6.19E-04		1.50E-09	1.50E-09
Fe+2	1.16E-05	3.79E-06		1.53E-11	1.53E-11	3.51E-06	7.46E-06		1.81E-11	1.81E-11
Fe+3	3.34E-01	1.09E-01		4.42E-07	4.42E-07	1.01E-01	2.15E-01		5.21E-07	5.21E-07
H+										
Hg+2	5.66E-04	1.86E-04		7.50E-10	7.50E-10	1.72E-04	3.66E-04		8.84E-10	8.84E-10
K+	6.86E+00	2.25E+00		9.13E-06	9.13E-06	2.08E+00	4.43E+00		1.08E-05	1.08E-05
La+3	2.32E-03	7.59E-04		3.07E-09	3.07E-09	7.03E-04	1.49E-03		3.62E-09	3.62E-09
Mg+2	1.42E-06	4.64E-07		1.88E-12	1.88E-12	4.30E-07	9.14E-07		2.21E-12	2.21E-12
Mn+2	4.70E-07	1.54E-07		6.23E-13	6.23E-13	1.43E-07	3.03E-07		7.34E-13	7.34E-13
Mn+4	1.05E-01	3.44E-02		1.39E-07	1.39E-07	3.18E-02	6.77E-02		1.64E-07	1.64E-07
Mo+6	7.02E-05	2.30E-05		9.70E-11	9.70E-11	2.13E-05	4.53E-05		1.14E-10	1.14E-10
Na+	6.39E+03	2.10E+03	1.83E+02	2.94E-03	1.83E+02	2.51E+03	2.73E+02	2.16E+02	3.47E-03	2.38E+02
Ni+3	7.96E-02	2.61E-02		1.06E-07	1.06E-07	2.42E-02	5.14E-02		1.24E-07	1.24E-07
Np+4	9.58E-05	3.14E-05		1.27E-10	1.27E-10	2.91E-05	6.19E-05		1.50E-10	1.50E-10
Pb+4	9.32E-02	3.05E-02		1.73E-07	1.73E-07	2.83E-02	6.01E-02		2.04E-07	2.04E-07
Pu+4	2.77E-04	9.08E-05		3.67E-10	3.67E-10	8.41E-05	1.79E-04		4.33E-10	4.33E-10
Rb+	2.33E-06	7.63E-07		3.08E-12	3.08E-12	7.07E-07	1.50E-06		3.64E-12	3.64E-12
Re+7	1.05E-06	3.44E-07		1.39E-12	1.39E-12	3.19E-07	6.77E-07		1.64E-12	1.64E-12
Rh+3	8.25E-06	2.70E-06		1.09E-11	1.09E-11	2.50E-06	5.32E-06		1.29E-11	1.29E-11
Ru+3	1.15E-05	3.77E-06		2.14E-11	2.14E-11	3.49E-06	7.41E-06		2.52E-11	2.52E-11
Se+6	1.31E-06	4.29E-07		3.47E-12	3.47E-12	3.97E-07	8.44E-07		4.09E-12	4.09E-12
Si+4	1.55E-01	5.07E-02		2.05E-07	2.05E-07	4.69E-02	9.98E-02		2.41E-07	2.41E-07
Sr+2	3.69E-03	1.21E-03		4.89E-09	4.89E-09	1.12E-03	2.38E-03		5.76E-09	5.76E-09
Te+6	8.02E-06	2.63E-06		1.49E-11	1.49E-11	2.44E-06	5.18E-06		1.76E-11	1.76E-11
UO2+2	1.03E+00	3.37E-01		1.36E-06	1.36E-06	3.12E-01	6.64E-01		1.61E-06	1.61E-06
Zn+2	7.54E-06	2.47E-06		9.99E-12	9.99E-12	2.29E-06	4.87E-06		1.18E-11	1.18E-11
Zr+4	2.36E-07	7.72E-08		3.12E-13	3.12E-13	7.15E-08	1.52E-07		3.68E-13	3.68E-13
Al(OH)4-	1.67E+02	5.49E+01		1.61E-04	1.61E-04	5.08E+01	7.94E+01		1.90E-04	1.90E-04
BO2-	6.89E-10	2.26E-10		4.74E-10	4.74E-10	2.09E-10	4.98E-10		5.59E-10	5.59E-10
Cl-	6.58E+00	2.16E+00		6.67E-05	6.67E-05	2.00E+00	4.25E+00		7.86E-05	7.86E-05
CO3-2	3.01E+01	9.87E+00		7.48E-06	7.48E-06	9.14E+00	1.94E+01		8.82E-06	8.82E-06
Cr(OH)4-	8.58E+00	2.81E+00		8.76E-06	8.76E-06	2.60E+00	4.31E+00		1.03E-05	1.03E-05
F-	1.10E+01	3.62E+00		3.30E-05	3.30E-05	3.35E+00	7.12E+00		3.88E-05	3.88E-05
I-	8.76E-04	2.87E-04		2.51E-08	2.51E-08	2.66E-04	5.65E-04		2.96E-08	2.96E-08
NO2-	9.18E+01	3.01E+01		1.22E-04	1.22E-04	2.79E+01	5.93E+01		1.44E-04	4.32E+01
NO3-	1.03E+03	3.39E+02		3.28E-03	3.28E-03	3.14E+02	6.67E+02		3.86E-03	3.86E-03
OH-	4.51E+03	1.48E+03	1.35E+02	2.63E-04	1.35E+02	1.59E+03	1.75E+02	1.60E+02	3.10E-04	1.60E+02
PO4-3	5.56E+01	1.82E+01		7.06E-05	7.06E-05	1.69E+01	2.88E+01		8.32E-05	8.32E-05
SO4-2	1.96E+01	6.43E+00		2.60E-05	2.60E-05	5.95E+00	1.27E+01		3.07E-05	3.07E-05
TcO4-	2.15E-02	7.04E-03		6.25E-08	6.25E-08	6.52E-03	1.39E-02		7.36E-08	7.36E-08
H2O	8.65E+04	2.84E+04	3.18E+02	7.92E+04	7.95E+04	8.16E+04	3.10E+04	3.75E+02	9.34E+04	9.38E+04
Organic Carbon	1.03E+01	3.36E+00		3.88E-05	3.88E-05	3.11E+00	6.62E+00		4.58E-05	4.58E-05
ZrO2;2H2O	7.31E-02	2.40E-02		9.68E-08	9.68E-08	2.22E-02	4.72E-02		1.14E-07	1.14E-07
Hg	3.47E-08	1.14E-08		2.39E-08	2.39E-08	1.05E-08	2.51E-08		2.81E-08	2.81E-08
TcO2										
Cl2										
CO										
CO2	3.31E-05	1.08E-05		2.28E-05	2.28E-05	1.00E-05	2.39E-05		2.68E-05	2.68E-05
F2										
H2										
I2										
N2										
N2O										
NO										
NO2										
O2										
SO2										
Dicyclopentadiene										
Glycolic Anion	3.36E-08	1.10E-08		2.31E-08	2.31E-08	1.02E-08	2.43E-08		2.72E-08	2.72E-08
H2S										
Glycolic Acid										
Kerosene										
NH3										
Oligomer										
Sulfur										

STREAM NAME	46	47	48	49	50	53	54	55	56	57
SOLID COMPONENTS										
Total Mass Flow (MT)	9.89E+00	1.39E+04				8.61E+00	1.39E+04			
Radionuclides (Ci)										
Am-241	6.83E+01	9.59E+04				5.95E+01	9.59E+04			
C-14	1.55E+00	2.17E+03				1.35E+00	2.17E+03			
Cs-137	2.13E+03	2.99E+06				1.86E+03	2.99E+06			
Ba-137	2.02E+03	2.84E+06				1.76E+03	2.84E+06			
Np-237	4.44E-02	6.23E+01				3.86E-02	6.23E+01			
Pu-239	1.79E+01	2.52E+04				1.56E+01	2.52E+04			
Pu-240	4.45E+00	6.25E+03				3.87E+00	6.25E+03			
Pu-241	5.01E+01	7.03E+04				4.36E+01	7.03E+04			
Sr-90	3.61E+04	5.07E+07				3.14E+04	5.07E+07			
Y-90	3.61E+04	5.07E+07				3.14E+04	5.07E+07			
Tc-99	6.64E+00	9.32E+03				5.78E+00	9.31E+03			
Total Curies	7.65E+04	1.07E+08				6.66E+04	1.07E+08			
Chemicals (MT)										
Ag+	1.05E-03	1.47E+00				9.13E-04	1.47E+00			
Al+3	5.24E-01	7.36E+02				4.56E-01	7.36E+02			
Am+3	1.99E-05	2.80E-02				1.73E-05	2.80E-02			
As+5	1.60E-06	2.25E-03				1.40E-06	2.25E-03			
Ba+2	2.65E-03	3.72E+00				2.31E-03	3.72E+00			
Be+2	2.18E-06	3.06E-03				1.90E-06	3.06E-03			
Bi+3	1.78E-01	2.50E+02				1.55E-01	2.50E+02			
Ca+2	1.03E-01	1.44E+02				8.93E-02	1.44E+02			
Cd+2	4.64E-03	6.52E+00				4.04E-03	6.51E+00			
Ce+3	1.67E-01	2.34E+02				1.45E-01	2.34E+02			
Cm+3	1.24E-08	1.75E-05				1.08E-08	1.75E-05			
Co+3	1.05E-09	1.48E-06				9.16E-10	1.48E-06			
Cr+3	4.08E-02	5.72E+01				3.55E-02	5.72E+01			
Cs+	1.42E-04	2.00E-01				1.24E-04	2.00E-01			
Cu+2	1.33E-04	1.87E-01				1.16E-04	1.87E-01			
Fe+3	5.40E-01	7.58E+02				4.70E-01	7.58E+02			
Hg+2	6.24E-05	8.77E-02				5.43E-05	8.76E-02			
K+	2.10E-02	2.95E+01				1.83E-02	2.94E+01			
La+3	1.63E-02	2.28E+01				1.42E-02	2.28E+01			
Mg+2	5.84E-03	8.21E+00				5.09E-03	8.20E+00			
Mn+4	1.27E-01	1.79E+02				1.11E-01	1.79E+02			
Mo+6	2.28E-05	3.20E-02				1.98E-05	3.20E-02			
Na+	4.13E-01	5.80E+02				3.60E-01	5.80E+02			
Ni+3	1.46E-01	2.05E+02				1.27E-01	2.05E+02			
Np+4	6.29E-05	8.84E-02				5.48E-05	8.84E-02			
Pb+4	2.07E-02	2.91E+01				1.81E-02	2.91E+01			
Pu+4	3.09E-04	4.34E-01				2.69E-04	4.34E-01			
Rh+3	1.36E-04	1.92E-01				1.19E-04	1.92E-01			
Se+6	2.35E-03	3.29E+00				2.04E-03	3.29E+00			
Si+4	1.64E-01	2.31E+02				1.43E-01	2.30E+02			
Sr+2	2.59E-02	3.64E+01				2.25E-02	3.63E+01			
Th+4	1.98E-03	2.78E+00				1.72E-03	2.77E+00			
Ti+4	1.10E-04	1.54E-01				9.54E-05	1.54E-01			
UO2+2	1.09E+00	1.54E+03				9.52E-01	1.54E+03			
Zn+2	3.59E-04	5.04E-01				3.12E-04	5.03E-01			
Cl-	6.37E-03	8.95E+00				5.55E-03	8.95E+00			
CO3-2	7.71E-02	1.08E+02				6.72E-02	1.08E+02			
F-	4.83E-02	6.78E+01				4.20E-02	6.78E+01			
I-	9.88E-07	1.39E-03				8.60E-07	1.39E-03			
NO2-	4.37E-02	6.14E+01				3.81E-02	6.14E+01			
NO3-	6.98E-01	9.80E+02				6.08E-01	9.79E+02			
OH-	2.23E+00	3.13E+03				1.94E+00	3.13E+03			
PO4-3	3.40E-01	4.78E+02				2.96E-01	4.78E+02			
SO4-2	1.81E-02	2.54E+01				1.58E-02	2.54E+01			
TcO4-	6.43E-04	9.03E-01				5.60E-04	9.02E-01			
Cancrinite	1.92E+00	2.69E+03				1.67E+00	2.69E+03			
H2O										
MnO2										
Organic Carbon	6.18E-02	8.68E+01				5.38E-02	8.68E+01			
ZrO2:2H2O	8.46E-01	1.19E+03				7.37E-01	1.19E+03			
Ag2O										
AlPO4										
Al2O3										
Am2O3										
As2O5										
B2O3										
BaO										
BeO										
Bi2O3										
CaO										
CdO										
Ce2O3										
Cm2O3										
Co2O3										
Cr2O3										
Cs2O										
CuO										
Fe2O3										
FeO										
HgO										
K2O										
La2O3										
Li2O										
MgO										
MnO										
MoO3										
Na2O										

STREAM NAME	46	47	48	49	50	53	54	55	56	57
SOLID COMPONENTS										
Chemicals Continued (MT)										
Nd_2O_3										
NpO_2										
PbO_2										
PuO_2										
Rb_2O										
Re_2O_7										
Rh_2O_3										
Ru_2O_3										
SeO_3										
SiO_2										
SO_3										
SrO										
Tc_2O_7										
TeO_3										
ThO_2										
TiO_2										
UO_3										
ZrO										
ZrO_2										
Cement										
Cu										
$CuSO_4$										
Dicyclopentadiene										
Flyash										
Oligomer										
Na Loaded Resin										
Sulfur										

STREAM NAME	59	60	61	62	63	101	102	103	104	105
LIQUID COMPONENTS										
Total Mass Flow (MT)	8.86E+03	6.26E+03	6.26E+03	6.25E+03	6.25E+03	1.03E+06	1.03E+06	3.43E+05	3.77E+03	3.39E+05
Volume (L)	7.43E+06	5.25E+06	5.25E+06	5.24E+06	5.24E+06	8.64E+08	8.64E+08	3.43E+08	3.77E+06	3.39E+08
Specific Gravity	1.19E+00	1.19E+00	1.19E+00	1.19E+00	1.19E+00	1.19E+00	1.19E+00	1.00E+00	1.00E+00	1.00E+00
Radionuclides (Ci)										
Am-241	6.76E+01	4.78E+01	4.77E+01	4.77E+01	4.77E+01	7.86E+03	7.86E+03	3.93E-04	3.93E-07	3.92E-04
C-14	2.83E+01	2.00E+01	2.00E+01	2.00E+01	2.00E+01	3.30E+03	3.30E+03	1.65E-04	1.65E-07	1.64E-04
Cs-137	2.71E+05	1.92E+05	1.92E+05	1.92E+05	1.92E+05	3.16E+07	3.16E+07	1.58E+00	1.58E-03	1.58E+00
Ba-137	2.58E+05	1.82E+05	1.82E+05	1.82E+05	1.82E+05	3.00E+07	3.00E+07	1.50E+00	1.50E-03	1.50E+00
Np-237	5.95E-02	4.21E-02	4.20E-02	4.20E-02	4.20E-02	6.92E+00	6.92E+00	3.46E-07	3.46E-10	3.45E-07
Pu-239	1.41E+01	9.96E+00	9.96E+00	9.95E+00	9.94E+00	1.64E+03	1.64E+03	8.19E-05	8.19E-08	8.18E-05
Pu-240	3.68E+00	2.60E+00	2.60E+00	2.60E+00	2.60E+00	4.29E+02	4.29E+02	2.14E-05	2.14E-08	2.14E-05
Pu-241	4.13E+01	2.92E+01	2.92E+01	2.92E+01	2.92E+01	4.81E+03	4.81E+03	2.40E-04	2.40E-07	2.40E-04
Sr-90	1.58E+04	1.12E+04	1.12E+04	1.12E+04	1.12E+04	1.84E+06	1.84E+06	9.19E-02	9.19E-05	9.18E-02
Y-90	1.58E+04	1.12E+04	1.12E+04	1.12E+04	1.12E+04	1.84E+06	1.84E+06	9.19E-02	9.19E-05	9.18E-02
Tc-99	1.95E+02	1.38E+02	1.38E+02	1.38E+02	1.38E+02	2.27E+04	2.27E+04	1.13E-03	1.13E-06	1.13E-03
Total Curies	5.61E+05	3.97E+05	3.97E+05	3.96E+05	3.96E+05	6.53E+07	6.53E+07	3.26E+00	3.26E-03	3.26E+00
Chemicals (MT)										
Ag+	2.74E-03	1.93E-03	1.93E-03	1.93E-03	1.93E-03	3.18E-01	3.18E-01	1.59E-08	1.59E-11	1.59E-08
Am+3	1.97E-05	1.39E-05	1.39E-05	1.39E-05	1.39E-05	2.29E-03	2.29E-03	1.14E-10	1.14E-13	1.14E-10
As+5	3.46E-07	2.45E-07	2.45E-07	2.44E-07	2.44E-07	4.03E-05	4.03E-05	2.01E-12	2.01E-15	2.01E-12
B+3	2.93E-04	2.07E-04	2.07E-04	2.07E-04	2.07E-04	3.41E-02	3.41E-02	1.70E-09	1.70E-12	1.70E-09
Ba+2	6.75E-03	4.77E-03	4.77E-03	4.77E-03	4.77E-03	7.86E-01	7.86E-01	3.92E-08	3.92E-11	3.92E-08
Be+2	2.07E-07	1.47E-07	1.47E-07	1.46E-07	1.46E-07	2.41E-05	2.41E-05	1.21E-12	1.21E-15	1.20E-12
Bi+3	1.01E-01	7.13E-02	7.13E-02	7.13E-02	7.12E-02	1.17E+01	1.17E+01	5.86E-07	5.86E-10	5.86E-07
Ca+2	1.41E-01	9.95E-02	9.95E-02	9.94E-02	9.94E-02	1.64E+01	1.64E+01	8.18E-07	8.18E-10	8.17E-07
Cd+2	6.52E-02	4.61E-02	4.61E-02	4.60E-02	4.60E-02	7.59E+00	7.59E+00	3.79E-07	3.79E-10	3.78E-07
Ce+3	2.02E-02	1.43E-02	1.43E-02	1.43E-02	1.43E-02	2.35E+00	2.35E+00	1.17E-07	1.17E-10	1.17E-07
Cm+3	8.12E-10	5.74E-10	5.74E-10	5.74E-10	5.73E-10	9.45E-08	9.45E-08	4.72E-15	4.72E-18	4.71E-15
Co+3	1.25E-05	8.82E-06	8.81E-06	8.81E-06	8.80E-06	1.45E-03	1.45E-03	7.25E-11	7.25E-14	7.24E-11
Cs+	1.57E-02	1.11E-02	1.11E-02	1.11E-02	1.10E-02	1.82E+00	1.82E+00	9.09E-08	9.09E-11	9.08E-08
Cu+2	8.45E-04	5.97E-04	5.97E-04	5.97E-04	5.96E-04	9.83E-02	9.83E-02	4.91E-09	4.91E-12	4.90E-09
Fe+2	1.02E-05	7.20E-06	7.20E-06	7.19E-06	7.19E-06	1.19E-03	1.19E-03	5.92E-11	5.92E-14	5.91E-11
Fe+3	2.94E-01	2.08E-01	2.08E-01	2.07E-01	2.07E-01	3.42E+01	3.42E+01	1.71E-06	1.71E-09	1.71E-06
H+										
Hg+2	4.99E-04	3.53E-04	3.52E-04	3.52E-04	3.52E-04	5.80E-02	5.80E-02	2.90E-09	2.90E-12	2.89E-09
K+	6.04E+00	4.27E+00	4.27E+00	4.27E+00	4.26E+00	7.03E+02	7.03E+02	3.51E-05	3.51E-08	3.51E-05
La+3	2.04E-03	1.44E-03	1.44E-03	1.44E-03	1.44E-03	2.37E-01	2.37E-01	1.18E-08	1.18E-11	1.18E-08
Mg+2	1.25E-06	8.82E-07	8.81E-07	8.81E-07	8.80E-07	1.45E-04	1.45E-04	7.25E-12	7.25E-15	7.24E-12
Mn+2	4.14E-07	2.93E-07	2.93E-07	2.92E-07	2.92E-07	4.82E-05	4.82E-05	2.41E-12	2.41E-15	2.40E-12
Mn+4	9.23E-02	6.53E-02	6.52E-02	6.52E-02	6.51E-02	1.07E+01	1.07E+01	5.36E-07	5.36E-10	5.36E-07
Mo+6	6.18E-05	4.37E-05	4.36E-05	4.36E-05	4.36E-05	7.19E-03	7.19E-03	3.59E-10	3.59E-13	3.59E-10
Na+	7.21E+02	5.10E+02	5.09E+02	5.09E+02	5.09E+02	8.39E+04	8.39E+04	1.01E-02	1.01E-05	1.01E-02
Ni+3	7.01E-02	4.96E-02	4.95E-02	4.95E-02	4.95E-02	8.16E+00	8.16E+00	4.07E-07	4.07E-10	4.07E-07
Np+4	8.44E-05	5.97E-05	5.96E-05	5.96E-05	5.96E-05	9.82E-03	9.82E-03	4.90E-10	4.90E-13	4.90E-10
Pb+4	8.20E-02	5.80E-02	5.80E-02	5.79E-02	5.79E-02	9.54E+00	9.54E+00	4.77E-07	4.77E-10	4.76E-07
Pu+4	2.44E-04	1.72E-04	1.72E-04	1.72E-04	1.72E-04	2.84E-02	2.84E-02	1.42E-09	1.42E-12	1.42E-09
Ru+	2.05E-06	1.45E-06	1.45E-06	1.45E-06	1.45E-06	2.39E-04	2.39E-04	1.19E-11	1.19E-14	1.19E-11
Re+7	9.24E-07	6.53E-07	6.53E-07	6.52E-07	6.52E-07	1.08E-04	1.08E-04	5.37E-12	5.37E-15	5.36E-12
Rh+3	7.26E-06	5.13E-06	5.13E-06	5.13E-06	5.12E-06	8.45E-04	8.45E-04	4.22E-11	4.22E-14	4.21E-11
Ru+3	1.01E-05	7.15E-06	7.15E-06	7.14E-06	7.14E-06	1.18E-03	1.18E-03	5.88E-11	5.88E-14	5.87E-11
Se+6	1.15E-06	8.14E-07	8.13E-07	8.13E-07	8.12E-07	1.34E-04	1.34E-04	6.69E-12	6.69E-15	6.68E-12
Si+4	1.36E-01	9.62E-02	9.62E-02	9.61E-02	9.60E-02	1.58E+01	1.58E+01	7.91E-07	7.91E-10	7.90E-07
Sr+2	3.25E-03	2.30E-03	2.30E-03	2.29E-03	2.29E-03	3.78E-01	3.78E-01	1.89E-08	1.89E-11	1.89E-08
Te+6	7.06E-06	4.99E-06	4.99E-06	4.99E-06	4.98E-06	8.22E-04	8.22E-04	4.10E-11	4.10E-14	4.10E-11
UO2+2	9.05E-01	6.40E-01	6.40E-01	6.39E-01	6.39E-01	1.05E+02	1.05E+02	5.26E-06	5.26E-09	5.25E-06
Zn+2	6.64E-06	4.70E-06	4.69E-06	4.69E-06	4.69E-06	7.73E-04	7.73E-04	3.86E-11	3.86E-14	3.85E-11
Zr+4	2.07E-07	1.47E-07	1.47E-07	1.46E-07	1.46E-07	2.41E-05	2.41E-05	1.21E-12	1.21E-15	1.20E-12
Al(OH)4-	1.07E+02	7.55E+01	7.55E+01	7.54E+01	7.54E+01	1.24E+04	1.24E+04	6.21E-04	6.21E-07	6.20E-04
BO2-	9.89E-12	6.99E-12	6.99E-12	6.98E-12	6.98E-12	1.15E-09	1.15E-09	5.75E-17	5.75E-20	5.74E-17
Cl-	5.79E+00	4.10E+00	4.09E+00	4.09E+00	4.09E+00	6.74E+02	6.74E+02	6.73E-05	6.73E-08	6.72E-05
CO3-2	2.65E+01	1.87E+01	1.87E+01	1.87E+01	1.87E+01	3.08E+03	3.08E+03	1.54E-04	1.54E-07	1.54E-04
Cr(OH)4-	5.82E+00	4.12E+00	4.11E+00	4.11E+00	4.11E+00	6.77E+02	6.77E+02	3.38E-05	3.38E-08	3.38E-05
F-	9.71E+00	6.87E+00	6.86E+00	6.86E+00	6.85E+00	1.13E+03	1.13E+03	5.64E-05	5.64E-08	5.64E-05
I-	7.71E-04	5.45E-04	5.45E-04	5.45E-04	5.44E-04	8.97E-02	8.97E-02	4.48E-09	4.48E-12	4.48E-09
NO2-	8.09E+01	5.72E+01	5.71E+01	5.71E+01	5.71E+01	9.41E+03	9.41E+03	4.70E-04	4.70E-07	4.69E-04
NO3-	9.09E+02	6.43E+02	6.43E+02	6.42E+02	6.42E+02	1.06E+05	1.06E+05	1.06E-02	1.06E-05	1.06E-02
OH-	2.09E+02	1.48E+02	1.48E+02	1.48E+02	1.48E+02	2.44E+04	2.44E+04	1.22E-03	1.22E-06	1.22E-03
PO4-3	3.90E+01	2.76E+01	2.75E+01	2.75E+01	2.75E+01	4.53E+03	4.53E+03	2.26E-04	2.26E-07	2.26E-04
SO4-2	1.73E+01	1.22E+01	1.22E+01	1.22E+01	1.22E+01	2.01E+03	2.01E+03	1.00E-04	1.00E-07	1.00E-04
TcO4-	1.89E-02	1.34E-02	1.34E-02	1.34E-02	1.33E-02	2.20E+00	2.20E+00	1.10E-07	1.10E-10	1.10E-07
H2O	6.71E+03	4.74E+03	4.74E+03	4.74E+03	4.73E+03	7.80E+05	7.80E+05	3.43E+05	3.77E+03	3.39E+05
Organic Carbon	9.03E+00	6.38E+00	6.38E+00	6.38E+00	6.37E+00	1.05E+03	1.05E+03	1.50E-04	1.50E-07	1.50E-04
ZrO2:2H2O	6.43E-02	4.55E-02	4.55E-02	4.54E-02	4.54E-02	7.49E+00	7.49E+00	3.74E-07	3.74E-10	3.73E-07
Hg	5.00E-10	3.54E-10	3.53E-10	3.53E-10	3.53E-10	5.80E-08	5.80E-08	2.90E-15	2.90E-18	2.89E-15
TcO2										
Cl2										
CO										
CO2	4.75E-07	3.36E-07	3.35E-07	3.35E-07	3.35E-07	5.52E-05	5.52E-05	2.76E-12	2.76E-15	2.76E-12
F2										
H2										
I2										
N2										
N2O										
NO										
NO2										
O2										
SO2										
Dicyclopentadiene										
Glycolic Anion	4.83E-10	3.41E-10	3.41E-10	3.41E-10	3.41E-10	5.61E-08	5.61E-08	2.80E-15	2.80E-18	2.80E-15
H2S										
Glycolic Acid										
Kerosene										
NH3										
Oligomer										
Sulfur										

STREAM NAME	59	60	61	62	63	101	102	103	104	105
SOLID COMPONENTS										
Total Mass Flow (MT)	8.86E-01	6.26E-01	6.26E-01	6.25E-01	6.25E-01	1.03E+02	1.03E+02			
Radionuclides (Ci)										
Am-241	4.97E+00	3.51E+00	3.51E+00	3.51E+00	3.51E+00	5.78E+02	5.78E+02			
C-14	1.12E-01	7.95E-02	7.94E-02	7.94E-02	7.93E-02	1.31E+01	1.31E+01			
Cs-137	1.55E+02	1.10E+02	1.10E+02	1.09E+02	1.09E+02	1.80E+04	1.80E+04			
Ba-137	1.47E+02	1.04E+02	1.04E+02	1.04E+02	1.04E+02	1.71E+04	1.71E+04			
Np-237	3.23E-03	2.28E-03	2.28E-03	2.28E-03	2.28E-03	3.75E-01	3.75E-01			
Pu-239	1.30E+00	9.21E-01	9.21E-01	9.20E-01	9.19E-01	1.52E+02	1.52E+02			
Pu-240	3.2AE-01	2.29E-01	2.29E-01	2.28E-01	2.28E-01	3.76E+01	3.76E+01			
Pu-241	3.64E+00	2.57E+00	2.57E+00	2.57E+00	2.57E+00	4.24E+02	4.24E+02			
Sr-90	2.63E+03	1.86E+03	1.86E+03	1.85E+03	1.85E+03	3.05E+05	3.05E+05			
Y-90	2.63E+03	1.86E+03	1.86E+03	1.85E+03	1.85E+03	3.05E+05	3.05E+05			
Tc-99	4.83E-01	3.41E-01	3.41E-01	3.41E-01	3.41E-01	5.61E+01	5.61E+01			
Total Curies	5.56E+03	3.93E+03	3.93E+03	3.93E+03	3.93E+03	6.47E+05	6.47E+05			
Chemicals (MT)										
Ag+	7.63E-05	5.39E-05	5.39E-05	5.38E-05	5.38E-05	8.87E-03	8.87E-03			
Al+3	8.39E-02	5.93E-02	5.93E-02	5.92E-02	5.92E-02	9.76E+00	9.76E+00			
Am+3	1.45E-06	1.02E-06	1.02E-06	1.02E-06	1.02E-06	1.69E-04	1.69E-04			
As+5	1.17E-07	8.24E-08	8.24E-08	8.23E-08	8.23E-08	1.36E-05	1.36E-05			
Ba+2	1.93E-04	1.36E-04	1.36E-04	1.36E-04	1.36E-04	2.24E-02	2.24E-02			
Be+2	1.58E-07	1.12E-07	1.12E-07	1.12E-07	1.12E-07	1.84E-05	1.84E-05			
Bi+3	1.30E-02	9.15E-03	9.15E-03	9.15E-03	9.14E-03	1.51E+00	1.51E+00			
Ca+2	7.46E-03	5.27E-03	5.27E-03	5.26E-03	5.26E-03	8.67E-01	8.67E-01			
Cd+2	3.37E-04	2.39E-04	2.38E-04	2.38E-04	2.38E-04	3.93E-02	3.93E-02			
Ce+3	1.21E-02	8.56E-03	8.56E-03	8.55E-03	8.54E-03	1.41E+00	1.41E+00			
Cm+3	9.04E-10	6.39E-10	6.39E-10	6.38E-10	6.38E-10	1.05E-07	1.05E-07			
Co+3	7.65E-11	5.41E-11	5.41E-11	5.40E-11	5.40E-11	8.90E-09	8.90E-09			
Cr+3	5.94E-03	4.20E-03	4.20E-03	4.20E-03	4.19E-03	6.92E-01	6.92E-01			
Cs+	1.03E-05	7.31E-06	7.31E-06	7.30E-06	7.30E-06	1.20E-03	1.20E-03			
Cu+2	9.70E-06	6.86E-06	6.85E-06	6.85E-06	6.84E-06	1.13E-03	1.13E-03			
Fe+3	3.93E-02	2.78E-02	2.77E-02	2.77E-02	2.77E-02	4.57E+00	4.57E+00			
Hg+2	4.54E-06	3.21E-06	3.21E-06	3.20E-06	3.20E-06	5.28E-04	5.28E-04			
K+	1.53E-03	1.08E-03	1.08E-03	1.08E-03	1.08E-03	1.77E-01	1.77E-01			
La+3	1.18E-03	8.35E-04	8.35E-04	8.34E-04	8.34E-04	1.38E-01	1.38E-01			
Mg+2	4.25E-04	3.00E-04	3.00E-04	3.00E-04	3.00E-04	4.94E-02	4.94E-02			
Mn+4	9.27E-03	6.55E-03	6.55E-03	6.54E-03	6.54E-03	1.08E+00	1.08E+00			
Mo+6	1.66E-06	1.17E-06	1.17E-06	1.17E-06	1.17E-06	1.93E-04	1.93E-04			
Na+	3.57E-02	2.52E-02	2.52E-02	2.52E-02	2.52E-02	4.15E+00	4.15E+00			
Ni+3	1.06E-02	7.51E-03	7.50E-03	7.50E-03	7.49E-03	1.24E+00	1.24E+00			
Np+4	4.58E-06	3.24E-06	3.23E-06	3.23E-06	3.23E-06	5.33E-04	5.33E-04			
Pb+4	1.51E-03	1.07E-03	1.07E-03	1.07E-03	1.07E-03	1.76E-01	1.76E-01			
Pu+4	2.25E-05	1.59E-05	1.59E-05	1.59E-05	1.59E-05	2.62E-03	2.62E-03			
Rh+3	9.92E-06	7.01E-06	7.01E-06	7.01E-06	7.00E-06	1.15E-03	1.15E-03			
Se+6	1.71E-04	1.21E-04	1.21E-04	1.20E-04	1.20E-04	1.98E-02	1.98E-02			
Si+4	1.19E-02	8.44E-03	8.43E-03	8.43E-03	8.42E-03	1.39E+00	1.39E+00			
Sr+2	1.88E-03	1.33E-03	1.33E-03	1.33E-03	1.33E-03	2.19E-01	2.19E-01			
Th+4	1.44E-04	1.02E-04	1.02E-04	1.02E-04	1.01E-04	1.67E-02	1.67E-02			
Ti+4	7.96E-06	5.63E-06	5.63E-06	5.62E-06	5.62E-06	9.27E-04	9.27E-04			
UO2+2	7.95E-02	5.62E-02	5.62E-02	5.61E-02	5.61E-02	9.25E+00	9.25E+00			
Zn+2	2.61E-05	1.84E-05	1.84E-05	1.84E-05	1.84E-05	3.03E-03	3.03E-03			
Cl-	4.63E-04	3.28E-04	3.27E-04	3.27E-04	3.27E-04	5.39E-02	5.39E-02			
CO3-2	5.61E-03	3.97E-03	3.96E-03	3.96E-03	3.96E-03	6.53E-01	6.53E-01			
F-	3.51E-03	2.48E-03	2.48E-03	2.48E-03	2.48E-03	4.09E-01	4.09E-01			
I-	7.19E-08	5.08E-08	5.08E-08	5.07E-08	5.07E-08	8.36E-06	8.36E-06			
NO2-	3.18E-03	2.25E-03	2.25E-03	2.25E-03	2.24E-03	3.70E-01	3.70E-01			
NO3-	5.07E-02	3.59E-02	3.58E-02	3.58E-02	3.58E-02	5.90E+00	5.90E+00			
OH-	2.35E-01	1.66E-01	1.66E-01	1.66E-01	1.66E-01	2.73E+01	2.73E+01			
PO4-3	6.46E-02	4.57E-02	4.56E-02	4.56E-02	4.56E-02	7.52E+00	7.52E+00			
SO4-2	1.32E-03	9.31E-04	9.30E-04	9.30E-04	9.29E-04	1.53E-01	1.53E-01			
TcO4-	4.67E-05	3.30E-05	3.30E-05	3.30E-05	3.30E-05	5.44E-03	5.44E-03			
Cancrinite	1.39E-01	9.85E-02	9.84E-02	9.84E-02	9.83E-02	1.62E+01	1.62E+01			
H2O										
MnO2										
Organic Carbon	4.49E-03	3.18E-03	3.18E-03	3.17E-03	3.17E-03	5.23E-01	5.23E-01			
ZrO2:2H2O	6.16E-02	4.35E-02	4.35E-02	4.35E-02	4.34E-02	7.16E+00	7.16E+00			
Ag2O										
AlPO4										
Al2O3										
Am2O3										
As2O5										
B2O3										
BaO										
BeO										
Bi2O3										
CaO										
CdO										
Ce2O3										
Cm2O3										
Co2O3										
Cr2O3										
Cs2O										
CuO										
Fe2O3										
FeO										
HgO										
K2O										
La2O3										
Li2O										
MgO										
MnO										
MoO3										
Na2O										

STREAM NAME	59	60	61	62	63	101	102	103	104	105
SOLID COMPONENTS										
Chemicals Continued (MT)										
Ni_2O_3										
NpO_2										
PbO_2										
PuO_2										
Re_2O										
Re_2O_7										
Rh_2O_3										
Ru_2O_3										
SeO_3										
SiO_2										
SO_3										
SrO										
Tc_2O_7										
TeO_3										
ThO_2										
TiO_2										
UO_3										
ZnO										
ZrO_2										
Cement										
Cu										
$CuSO_4$										
Dicyclopentadiene										
Flyash										
Oligomer										
Na Loaded Resin										
Sulfur										

STREAM NAME	106	107	108	109	110	111	112	113	114	115
LIQUID COMPONENTS										
Total Mass Flow (MT)	6.87E+05	6.87E+05				6.87E+05				
Volume (L)	5.21E+08	5.21E+08				5.21E+08				
Specific Gravity	1.32E+00	1.32E+00				1.32E+00				
Radionuclides (Ci)										
Am-241	7.86E+03	7.86E+03				7.86E+03				
C-14	3.30E+03	3.30E+03				3.30E+03				
Cs-137	3.16E+07	3.16E+07				3.16E+07				
Ba-137	3.00E+07	3.00E+07				3.00E+07				
Np-237	6.92E+00	6.92E+00				6.92E+00				
Pu-239	1.64E+03	1.64E+03				1.64E+03				
Pu-240	4.29E+02	4.29E+02				4.29E+02				
Pu-241	4.81E+03	4.81E+03				4.81E+03				
Sr-90	1.84E+06	1.84E+06				1.84E+06				
Y-90	1.84E+06	1.84E+06				1.84E+06				
Tc-99	2.27E+04	2.27E+04				2.27E+04				
Total Curies	6.53E+07	6.53E+07				6.53E+07				
Chemicals (MT)										
Ag+	3.18E-01	3.18E-01				3.18E-01				
Am+3	2.29E-03	2.29E-03				2.29E-03				
As+5	4.03E-05	4.03E-05				4.03E-05				
B+3	3.41E-02	3.41E-02				3.41E-02				
Ba+2	7.86E-01	7.86E-01				7.86E-01				
Be+2	2.41E-05	2.41E-05				2.41E-05				
Bi+3	1.17E+01	1.17E+01				1.17E+01				
Ca+2	1.64E+01	1.64E+01				1.64E+01				
Cd+2	7.59E+00	7.59E+00				7.59E+00				
Ce+3	2.35E+00	2.35E+00				2.35E+00				
Cm+3	9.45E-08	9.45E-08				9.45E-08				
Co+3	1.45E-03	1.45E-03				1.45E-03				
Cs+	1.82E+00	1.82E+00				1.82E+00				
Cu+2	9.83E-02	9.83E-02				9.83E-02				
Fe+2	1.19E-03	1.19E-03				1.19E-03				
Fe+3	3.42E+01	3.42E+01				3.42E+01				
H+										
Hg+2	5.80E-02	5.80E-02				5.80E-02				
K+	7.03E+02	7.03E+02				7.03E+02				
La+3	2.37E-01	2.37E-01				2.37E-01				
Mg+2	1.45E-04	1.45E-04				1.45E-04				
Mn+2	4.82E-05	4.82E-05				4.82E-05				
Mn+4	1.07E+01	1.07E+01				1.07E+01				
Mo+6	7.19E-03	7.19E-03				7.19E-03				
Na+	8.39E+04	8.39E+04				8.39E+04				
Ni+3	8.16E+00	8.16E+00				8.16E+00				
Np+4	9.82E-03	9.82E-03				9.82E-03				
Pb+4	9.54E+00	9.54E+00				9.54E+00				
Pu+4	2.84E-02	2.84E-02				2.84E-02				
Rb+	2.39E-04	2.39E-04				2.39E-04				
Re+7	1.08E-04	1.08E-04				1.08E-04				
Rh+3	8.45E-04	8.45E-04				8.45E-04				
Ru+3	1.18E-03	1.18E-03				1.18E-03				
Se+6	1.34E-04	1.34E-04				1.34E-04				
Si+4	1.58E+01	1.58E+01				1.58E+01				
Sr+2	3.78E-01	3.78E-01				3.78E-01				
Te+6	8.22E-04	8.22E-04				8.22E-04				
UO2+2	1.05E+02	1.05E+02				1.05E+02				
Zn+2	7.73E-04	7.73E-04				7.73E-04				
Zr+4	2.41E-05	2.41E-05				2.41E-05				
Al(OH)4-	1.24E+04	1.24E+04				1.24E+04				
BO2-	1.15E-09	1.15E-09				1.15E-09				
Cl-	6.74E+02	6.74E+02				6.74E+02				
CO3-2	3.08E+03	3.08E+03				3.08E+03				
Cr(OH)4-	6.77E+02	6.77E+02				6.77E+02				
F-	1.13E+03	1.13E+03				1.13E+03				
I-	8.97E-02	8.97E-02				8.97E-02				
NO2-	9.41E+03	9.41E+03				9.41E+03				
NO3-	1.06E+05	1.06E+05				1.06E+05				
OH-	2.44E+04	2.44E+04				2.44E+04				
PO4-3	4.53E+03	4.53E+03				4.53E+03				
SO4-2	2.01E+03	2.01E+03				2.01E+03				
TcO4-	2.20E+00	2.20E+00				2.20E+00				
H2O	4.37E+05	4.37E+05				4.37E+05				
Organic Carbon	1.05E+03	1.05E+03				1.05E+03				
ZrO2:2H2O	7.49E+00	7.49E+00				7.49E+00				
Hg	5.80E-08	5.80E-08				5.80E-08				
TcO2										
Cl2										
CO										
CO2	5.52E-05	5.52E-05				5.52E-05				
F2										
H2										
I2										
N2										
N2O										
NO										
NO2										
O2										
SO2										
Dicyclopentadiene										
Glycolic Anion	5.61E-08	5.61E-08				5.61E-08				
H2S										
Glycolic Acid										
Kerosene										
NH3										
Oligomer										
Sulfur										

STREAM NAME	106	107	108	109	110	111	112	113	114	115
SOLID COMPONENTS										
Total Mass Flow (MT)	1.03E+02	1.03E+02				1.03E+02				
Radionuclides (Ci)										
Am-241	5.78E+02	5.78E+02				5.78E+02				
C-14	1.31E+01	1.31E+01				1.31E+01				
Cs-137	1.80E+04	1.80E+04				1.80E+04				
Ba-137	1.71E+04	1.71E+04				1.71E+04				
Np-237	3.75E-01	3.75E-01				3.75E-01				
Pu-239	1.52E+02	1.52E+02				1.52E+02				
Pu-240	3.76E+01	3.76E+01				3.76E+01				
Pu-241	4.24E+02	4.24E+02				4.24E+02				
Sr-90	3.05E+05	3.05E+05				3.05E+05				
Y-90	3.05E+05	3.05E+05				3.05E+05				
Tc-99	5.61E+01	5.61E+01				5.61E+01				
Total Curies	6.47E+05	6.47E+05				6.47E+05				
Chemicals (MT)										
Ag+	8.87E-03	8.87E-03				8.87E-03				
Al+3	9.76E+00	9.76E+00				9.76E+00				
Am+3	1.69E-04	1.69E-04				1.69E-04				
As+5	1.36E-05	1.36E-05				1.36E-05				
Ba+2	2.24E-02	2.24E-02				2.24E-02				
Be+2	1.84E-05	1.84E-05				1.84E-05				
Bi+3	1.51E+00	1.51E+00				1.51E+00				
Ca+2	8.67E-01	8.67E-01				8.67E-01				
Cd+2	3.93E-02	3.93E-02				3.93E-02				
Ce+3	1.41E+00	1.41E+00				1.41E+00				
Cm+3	1.05E-07	1.05E-07				1.05E-07				
Co+3	8.90E-09	8.90E-09				8.90E-09				
Cr+3	6.92E-01	6.92E-01				6.92E-01				
Cs+	1.20E-03	1.20E-03				1.20E-03				
Cu+2	1.13E-03	1.13E-03				1.13E-03				
Fe+3	4.57E+00	4.57E+00				4.57E+00				
Hg+2	5.28E-04	5.28E-04				5.28E-04				
K+	1.77E-01	1.77E-01				1.77E-01				
La+3	1.38E-01	1.38E-01				1.38E-01				
Mg+2	4.94E-02	4.94E-02				4.94E-02				
Mn+4	1.08E+00	1.08E+00				1.08E+00				
Mo+6	1.93E-04	1.93E-04				1.93E-04				
Na+	4.15E+00	4.15E+00				4.15E+00				
Ni+3	1.24E+00	1.24E+00				1.24E+00				
Np+4	5.33E-04	5.33E-04				5.33E-04				
Pb+4	1.76E-01	1.76E-01				1.76E-01				
Pu+4	2.62E-03	2.62E-03				2.62E-03				
Rh+3	1.15E-03	1.15E-03				1.15E-03				
Se+6	1.98E-02	1.98E-02				1.98E-02				
Si+4	1.39E+00	1.39E+00				1.39E+00				
Sr+2	2.19E-01	2.19E-01				2.19E-01				
Th+4	1.67E-02	1.67E-02				1.67E-02				
Ti+4	9.27E-04	9.27E-04				9.27E-04				
UO2+2	9.25E+00	9.25E+00				9.25E+00				
Zr+2	3.03E-03	3.03E-03				3.03E-03				
Cl-	5.39E-02	5.39E-02				5.39E-02				
CO3-2	6.53E-01	6.53E-01				6.53E-01				
F-	4.09E-01	4.09E-01				4.09E-01				
I-	8.36E-06	8.36E-06				8.36E-06				
NO2-	3.70E-01	3.70E-01				3.70E-01				
NO3-	5.90E+00	5.90E+00				5.90E+00				
OH-	2.73E+01	2.73E+01				2.73E+01				
PO4-3	7.52E+00	7.52E+00				7.52E+00				
SO4-2	1.53E-01	1.53E-01				1.53E-01				
TcO4-	5.44E-03	5.44E-03				5.44E-03				
Cancrinite	1.62E+01	1.62E+01				1.62E+01				
H2O										
MnO2										
Organic Carbon	5.23E-01	5.23E-01				5.23E-01				
ZrO2:2H2O	7.16E+00	7.16E+00				7.16E+00				
Ag2O										
AlPO4										
Al2O3										
Am2O3										
As2O5										
B2O3										
BaO										
BeO										
Bi2O3										
CaO										
CdO										
Ce2O3										
Cm2O3										
Co2O3										
Cr2O3										
Cs2O										
CuO										
Fe2O3										
FeO										
HgO										
K2O										
La2O3										
Li2O										
MgO										
MnO										
MoO3										
Na2O										

STREAM NAME	106	107	108	109	110	111	112	113	114	115
SOLID COMPONENTS										
Chemicals Continued (MT)										
Nd_2O_3										
NpO_2										
HfO_2										
PuO_2										
Rb_2O										
Re_2O_7										
Rh_2O_3										
Ru_2O_3										
SeO_3										
SiO_2										
SO_3										
SrO										
Tc_2O_7										
TeO_3										
ThO_2										
TiO_2										
UO_3										
ZrO										
ZrO_2										
Cement										
Cu										
$CuSO_4$										
Dicyclopentadiene										
Flyash										
Oligomer										
Na Loaded Resin										
Sulfur										

STREAM NAME	116	117	118	200	201	202	203	204	205	206
LIQUID COMPONENTS										
Total Mass Flow (MT)				6.87E+05	6.87E+05		1.56E+02	5.00E+02	6.87E+05	5.00E+02
Volume (L)				5.21E+08	5.21E+08		1.56E+05	4.17E+05	5.21E+08	4.17E+05
Specific Gravity				1.32E+00	1.32E+00		1.00E+00	1.20E+00	1.32E+00	1.20E+00
Radionuclides (Ci)										
Am-241				7.86E+03	7.86E+03		2.01E-07	3.93E+00	7.86E+03	3.93E+00
C-14				3.30E+03	3.30E+03		8.41E-08	1.65E+00	3.29E+03	1.65E+00
Cs-137				3.16E+07	3.16E+07		1.74E-04	1.58E+04	3.16E+07	1.58E+04
Ba-137				3.00E+07	3.00E+07		1.65E-04	1.50E+04	3.00E+07	1.50E+04
Np-237				6.92E+00	6.92E+00		1.77E-10	3.46E-03	6.92E+00	3.46E-03
Pu-239				1.64E+03	1.64E+03		4.18E-08	8.20E-01	1.64E+03	8.20E-01
Pu-240				4.29E+02	4.29E+02		1.09E-08	2.14E-01	4.28E+02	2.14E-01
Pu-241				4.81E+03	4.81E+03		1.23E-07	2.40E+00	4.80E+03	2.40E+00
Sr-90				1.84E+06	1.84E+06		4.70E-05	9.21E+02	1.84E+06	9.21E+02
Y-90				1.84E+06	1.84E+06		4.70E-05	9.21E+02	1.84E+06	9.21E+02
Tc-99				2.27E+04	2.27E+04		1.27E-06	1.14E+01	2.27E+04	1.14E+01
Total Curies				6.53E+07	6.53E+07		4.35E-04	3.27E+04	6.53E+07	3.27E+04
Chemicals (MT)										
Ag+				3.18E-01	3.18E-01		8.12E-12	1.59E-04	3.18E-01	1.59E-04
Am+3				2.29E-03	2.29E-03		5.85E-14	1.15E-06	2.29E-03	1.15E-06
As+5				4.03E-05	4.03E-05		1.03E-15	2.01E-08	4.03E-05	2.01E-08
B+3				3.41E-02	3.41E-02		8.70E-13	1.70E-05	3.41E-02	1.70E-05
Ba+2				7.86E-01	7.86E-01		2.00E-11	3.93E-04	7.85E-01	3.93E-04
Be+2				2.41E-05	2.41E-05		6.16E-16	1.21E-08	2.41E-05	1.21E-08
Bi+3				1.17E+01	1.17E+01		3.00E-10	5.87E-03	1.17E+01	5.87E-03
Ca+2				1.64E+01	1.64E+01		5.58E-08	8.19E-03	1.64E+01	8.19E-03
Cd+2				7.59E+00	7.59E+00		2.72E-10	3.79E-03	7.58E+00	3.79E-03
Ce+3				2.35E+00	2.35E+00		5.99E-11	1.18E-03	2.35E+00	1.18E-03
Cm+3				9.45E-08	9.45E-08		2.41E-18	4.73E-11	9.45E-08	4.73E-11
Co+3				1.45E-03	1.45E-03		3.70E-14	7.26E-07	1.45E-03	7.26E-07
Cs+				1.82E+00	1.82E+00		1.00E-11	9.10E-04	1.82E+00	9.10E-04
Cu+2				9.83E-02	9.83E-02		2.51E-12	4.92E-05	9.83E-02	4.92E-05
Fe+2				1.19E-03	1.19E-03		3.02E-14	5.92E-07	1.18E-03	5.92E-07
Fe+3				3.42E+01	3.42E+01		8.72E-10	1.71E-02	3.42E+01	1.71E-02
H+										
Hg+2				5.80E-02	5.80E-02		1.48E-12	2.90E-05	5.80E-02	2.90E-05
K+				7.03E+02	7.03E+02		1.80E-08	3.51E-01	7.02E+02	3.51E-01
La+3				2.37E-01	2.37E-01		6.05E-12	1.19E-04	2.37E-01	1.19E-04
Mg+2				1.45E-04	1.45E-04		3.70E-15	7.26E-08	1.45E-04	7.26E-08
Mn+2				4.82E-05	4.82E-05		1.23E-15	2.41E-08	4.81E-05	2.41E-08
Mn+4				1.07E+01	1.07E+01		2.74E-10	5.37E-03	1.07E+01	5.37E-03
Mo+6				7.19E-03	7.19E-03		1.91E-13	3.59E-06	7.18E-03	3.59E-06
Na+				8.39E+04	8.39E+04		5.81E-06	4.19E+01	8.38E+04	4.19E+01
Ni+3				8.16E+00	8.16E+00		2.08E-10	4.08E-03	8.15E+00	4.08E-03
Np+4				9.82E-03	9.82E-03		2.51E-13	4.91E-06	9.81E-03	4.91E-06
Pb+4				9.54E+00	9.54E+00		3.42E-10	4.77E-03	9.54E+00	4.77E-03
Pu+4				2.84E-02	2.84E-02		7.24E-13	1.42E-05	2.84E-02	1.42E-05
Rb+				2.39E-04	2.39E-04		6.08E-15	1.19E-07	2.38E-04	1.19E-07
Re+7				1.08E-04	1.08E-04		2.74E-15	5.37E-08	1.07E-04	5.37E-08
Rh+3				8.45E-04	8.45E-04		2.16E-14	4.22E-07	8.44E-04	4.22E-07
Ru+3				1.18E-03	1.18E-03		4.22E-14	5.89E-07	1.18E-03	5.89E-07
Se+6				1.34E-04	1.34E-04		6.85E-15	6.70E-08	1.34E-04	6.70E-08
Si+4				1.58E+01	1.58E+01		4.04E-10	7.92E-03	1.58E+01	7.92E-03
Sr+2				3.78E-01	3.78E-01		9.64E-12	1.89E-04	3.78E-01	1.89E-04
Te+6				8.22E-04	8.22E-04		2.94E-14	4.11E-07	8.21E-04	4.11E-07
UO2+2				1.05E+02	1.05E+02		2.69E-09	5.27E-02	1.05E+02	5.27E-02
Zn+2				7.73E-04	7.73E-04		1.97E-14	3.86E-07	7.72E-04	3.86E-07
Zr+4				2.41E-05	2.41E-05		6.16E-16	1.21E-08	2.41E-05	1.21E-08
Al(OH)4-				1.24E+04	1.24E+04		3.17E-07	6.22E+00	1.24E+04	6.22E+00
BO2-				1.15E-09	1.15E-09		9.35E-13	1.51E-12	1.15E-09	1.51E-12
Cl-				6.74E+02	6.74E+02		1.32E-07	3.37E-01	6.74E+02	3.37E-01
CO3-2				3.08E+03	3.08E+03		1.48E-08	1.54E+00	3.08E+03	1.54E+00
Cr(OH)4-				6.77E+02	6.77E+02		1.73E-08	3.39E-01	6.77E+02	3.39E-01
F-				1.13E+03	1.13E+03		6.50E-08	5.65E-01	1.13E+03	5.65E-01
I-				8.97E-02	8.97E-02		4.95E-11	4.49E-05	8.97E-02	4.49E-05
NO2-				9.41E+03	9.41E+03		2.41E-07	4.71E+00	9.40E+03	4.71E+00
NO3-				1.06E+05	1.06E+05		6.47E-06	5.29E+01	1.06E+05	5.29E+01
OH-				2.44E+04	2.44E+04		5.18E-07	1.22E+01	2.43E+04	1.22E+01
PO4-3				4.53E+03	4.53E+03		1.39E-07	2.27E+00	4.53E+03	2.27E+00
SO4-2				2.01E+03	2.01E+03		5.14E-08	1.00E+00	2.01E+03	1.00E+00
TcO4-				2.20E+00	2.20E+00		1.23E-10	1.10E-03	2.20E+00	1.10E-03
H2O				4.37E+05	4.37E+05		1.56E+02	3.75E+02	4.37E+05	3.75E+02
Organic Carbon				1.05E+03	1.05E+03		7.66E-08	5.25E-01	1.05E+03	5.25E-01
ZrO2:2H2O				7.49E+00	7.49E+00		1.91E-10	3.74E-03	7.48E+00	3.74E-03
Hg				5.80E-08	5.80E-08		4.71E-11	7.61E-11	5.80E-08	7.61E-11
TcO2										
Cl2										
CO										
CO2				5.52E-05	5.52E-05		4.49E-08	7.25E-08	5.52E-05	7.25E-08
F2										
H2										
I2										
N2										
N2O										
NO										
NO2										
O2										
SO2										
Dicyclopentadiene										
Glycolic Anion				5.61E-08	5.61E-08		4.56E-11	7.37E-11	5.61E-08	7.37E-11
H2S										
Glycolic Acid										
Kerosene										
NH3										
Oligomer										
Sulfur										

STREAM NAME	116	117	118	200	201	202	203	204	205	206
SOLID COMPONENTS										
Total Mass Flow (MT)				1.03E+02	1.03E+02	6.25E+01		1.65E+02	1.03E+00	1.65E+02
Radionuclides (Ci)										
Am-241				5.78E+02	5.78E+02			5.72E+02	5.78E+00	5.72E+02
C-14				1.31E+01	1.31E+01			1.30E+01	1.31E-01	1.30E+01
Cs-137				1.80E+04	1.80E+04			1.78E+04	1.80E+02	1.78E+04
Ba-137				1.71E+04	1.71E+04			1.70E+04	1.71E+02	1.70E+04
Np-237				3.75E-01	3.75E-01			3.72E-01	3.75E-03	3.72E-01
Pu-239				1.52E+02	1.52E+02			1.50E+02	1.52E+00	1.50E+02
Pu-240				3.76E+01	3.76E+01			3.73E+01	3.76E-01	3.73E+01
Pu-241				4.24E+02	4.24E+02			4.19E+02	4.24E+00	4.19E+02
Sr-90				3.05E+05	3.05E+05			3.02E+05	3.05E+03	3.02E+05
Y-90				3.05E+05	3.05E+05			3.02E+05	3.05E+03	3.02E+05
Tc-99				5.61E+01	5.61E+01			5.56E+01	5.61E-01	5.56E+01
Total Curies				6.47E+05	6.47E+05			6.41E+05	6.47E+03	6.41E+05
Chemicals (MT)										
Ag+				8.87E-03	8.87E-03			8.78E-03	8.87E-05	8.78E-03
Al+3				9.76E+00	9.76E+00			9.66E+00	9.76E-02	9.66E+00
Am+3				1.69E-04	1.69E-04			1.67E-04	1.69E-06	1.67E-04
As+5				1.36E-05	1.36E-05			1.34E-05	1.36E-07	1.34E-05
Ba+2				2.24E-02	2.24E-02			2.22E-02	2.24E-04	2.22E-02
Be+2				1.84E-05	1.84E-05			1.82E-05	1.84E-07	1.82E-05
Bi+3				1.51E+00	1.51E+00			1.49E+00	1.51E-02	1.49E+00
Ca+2				8.67E-01	8.67E-01			8.59E-01	8.67E-03	8.59E-01
Cd+2				3.93E-02	3.93E-02			3.89E-02	3.93E-04	3.89E-02
Ce+3				1.41E+00	1.41E+00			1.40E+00	1.41E-02	1.40E+00
Cm+3				1.05E-07	1.05E-07			1.04E-07	1.05E-09	1.04E-07
Co+3				8.90E-09	8.90E-09			8.82E-09	8.90E-11	8.82E-09
Cr+3				6.92E-01	6.92E-01			6.85E-01	6.92E-03	6.85E-01
Cs+				1.20E-03	1.20E-03			1.19E-03	1.20E-05	1.19E-03
Cu+2				1.13E-03	1.13E-03			1.12E-03	1.13E-05	1.12E-03
Fe+3				4.57E+00	4.57E+00			4.52E+00	4.57E-02	4.52E+00
Hg+2				5.28E-04	5.28E-04			5.23E-04	5.28E-06	5.23E-04
K+				1.77E-01	1.77E-01			1.76E-01	1.77E-03	1.76E-01
La+3				1.38E-01	1.38E-01			1.36E-01	1.38E-03	1.36E-01
Mg+2				4.94E-02	4.94E-02			4.89E-02	4.94E-04	4.89E-02
Mn+4				1.08E+00	1.08E+00			1.07E+00	1.08E-02	1.07E+00
Mo+6				1.93E-04	1.93E-04			1.91E-04	1.93E-06	1.91E-04
Na+				4.15E+00	4.15E+00			4.11E+00	4.15E-02	4.11E+00
Ni+3				1.24E+00	1.24E+00			1.22E+00	1.24E-02	1.22E+00
Np+4				5.33E-04	5.33E-04			5.27E-04	5.33E-06	5.27E-04
Pb+4				1.76E-01	1.76E-01			1.74E-01	1.76E-03	1.74E-01
Pu+4				2.62E-03	2.62E-03			2.59E-03	2.62E-05	2.59E-03
Rh+3				1.15E-03	1.15E-03			1.14E-03	1.15E-05	1.14E-03
Se+6				1.98E-02	1.98E-02			1.96E-02	1.98E-04	1.96E-02
Si+4				1.39E+00	1.39E+00			1.37E+00	1.39E-02	1.37E+00
Sr+2				2.19E-01	2.19E-01			2.17E-01	2.19E-03	2.17E-01
Th+4				1.67E-02	1.67E-02			1.66E-02	1.67E-04	1.66E-02
Ti+4				9.27E-04	9.27E-04			9.17E-04	9.27E-06	9.17E-04
UO2+2				9.25E+00	9.25E+00			9.16E+00	9.25E-02	9.16E+00
Zn+2				3.03E-03	3.03E-03			3.00E-03	3.03E-05	3.00E-03
Cl-				5.39E-02	5.39E-02			5.34E-02	5.39E-04	5.34E-02
CO3-2				6.53E-01	6.53E-01			6.46E-01	6.53E-03	6.46E-01
F-				4.09E-01	4.09E-01			4.04E-01	4.09E-03	4.04E-01
I-				8.36E-06	8.36E-06			8.28E-06	8.36E-08	8.28E-06
NO2-				3.70E-01	3.70E-01			3.66E-01	3.70E-03	3.66E-01
NO3-				5.90E+00	5.90E+00			5.84E+00	5.90E-02	5.84E+00
OH-				2.73E+01	2.73E+01			2.70E+01	2.73E-01	2.70E+01
PO4-3				7.52E+00	7.52E+00			7.44E+00	7.52E-02	7.44E+00
SO4-2				1.53E-01	1.53E-01			1.52E-01	1.53E-03	1.52E-01
TcO4-				5.44E-03	5.44E-03			5.38E-03	5.44E-05	5.38E-03
Cancrinite				1.62E+01	1.62E+01			1.60E+01	1.62E-01	1.60E+01
H2O										
MnO2										
Organic Carbon				5.23E-01	5.23E-01			5.18E-01	5.23E-03	5.18E-01
ZrO2:2H2O				7.16E+00	7.16E+00			7.09E+00	7.16E-02	7.09E+00
Ag2O										
AlPO4										
Al2O3										
Am2O3										
As2O5										
B2O3						1.31E+01		1.31E+01		1.31E+01
BaO										
BeO										
Bi2O3										
CaO						1.51E+00		1.51E+00		1.51E+00
CdO										
Ce2O3										
Cm2O3										
Co2O3										
Cr2O3										
Cs2O										
CuO										
Fe2O3										
FeO										
HgO										
K2O										
La2O3										
Li2O						3.09E+00		3.09E+00		3.09E+00
MgO						1.51E+00		1.51E+00		1.51E+00
MnO										
MoO3										
Na2O										

STREAM NAME	116	117	118	200	201	202	203	204	205	206
SOLID COMPONENTS										
Chemicals Continued (MT)										
Ni_2O_3										
NpO_2										
PbO_2										
PuO_2										
Rb_2O										
Re_2O_7										
Rh_2O_3										
Ru_2O_3										
SeO_3										
SiO_2						4.32E+01		4.32E+01		4.32E+01
SO_3										
SrO										
Tc_2O_7										
TeO_3										
ThO_2										
TiO_2										
UO_3										
ZnO										
ZrO_2										
Cement										
C_1										
C_1SO_4										
Dicyclopentadiene										
Flyash										
Oligomer										
Na Loaded Resin										
Sulfur										

STREAM NAME	207	208	209	212	213	214	215	216	217	218
LIQUID COMPONENTS										
Total Mass Flow (MT)	6.89E+05	2.89E+04	2.89E+04	8.92E+04	8.95E+04	2.89E+04	7.23E+03	2.17E+04	1.47E+04	1.46E+04
Volume (L)	5.23E+08	2.89E+07	2.89E+07	8.79E+07	8.79E+07	2.89E+07	7.23E+06	2.17E+07	1.45E+07	1.43E+07
Specific Gravity	1.32E+00	1.00E+00	1.00E+00	1.02E+00	1.02E+00	1.00E+00	1.00E+00	1.00E+00	1.01E+00	1.02E+00
Radionuclides (Ci)										
Am-241	7.86E+03									
C-14	3.29E+03									
Cs-137	7.29E+05			2.36E+01	3.08E+07					
Ba-137	6.93E+05			2.25E+01	2.93E+07					
Np-237	6.92E+00									
Pu-239	1.64E+03									
Pu-240	4.28E+02									
Pu-241	4.80E+03									
Sr-90	1.84E+06									
Y-90	1.84E+06									
Tc-99	2.27E+04									
Total Curies	5.14E+06			4.61E+01	6.01E+07					
Chemicals (MT)										
Ag+	3.18E-01									
Am+3	2.29E-03									
As+5	4.03E-05									
B+3	3.41E-02									
Ba+2	7.85E-01									
Be+2	2.41E-05									
Bi+3	1.17E+01									
Ca+2	1.64E+01									
Cd+2	7.58E+00									
Ce+3	2.35E+00									
Cm+3	9.45E-08									
Co+3	1.45E-03									
Cs+	4.20E-02			1.36E-06	1.78E+00					
Cu+2	9.83E-02									
Fe+2	1.18E-03									
Fe+3	3.42E+01									
H+				4.35E+01	2.90E+01					3.64E+00
Hg+2	5.80E-02									
K+	7.00E+02			2.13E-06	2.77E+00					
La+3	2.37E-01									
Mg+2	1.45E-04									
Mn+2	4.81E-05									
Mn+4	1.07E+01									
Mo+6	7.18E-03									
Na+	8.38E+04			2.53E-04	3.31E+02				1.69E+02	8.55E+01
Ni+3	8.15E+00									
Np+4	9.81E-03									
Pb+4	9.54E+00									
Pu+4	2.84E-02									
Rb+	2.38E-04									
Re+7	1.07E-04									
Rh+3	8.44E-04									
Ru+3	1.18E-03									
Se+6	1.34E-04									
Si+4	1.58E+01									
Sr+2	3.78E-01									
Te+6	8.21E-04									
UO2+2	1.05E+02									
Zn+2	7.72E-04									
Zr+4	2.41E-05									
Al(OH)4-	1.24E+04									
BO2-	1.15E-09									
Cl-	6.74E+02									
CO3-2	3.08E+03									
Cr(OH)4-	6.77E+02									
F-	1.13E+03									
I-	8.97E-02									
NO2-	9.40E+03									
NO3-	1.06E+05			2.69E+03	2.69E+03					
OH-	2.43E+04								1.25E+02	1.25E+02
PO4-3	4.53E+03									
SO4-2	2.01E+03									
TcO4-	2.20E+00									
H2O	4.39E+05	2.89E+04	2.89E+04	8.65E+04	8.65E+04	2.89E+04	7.23E+03	2.17E+04	1.44E+04	1.44E+04
Organic Carbon	1.05E+03									
ZrO2:2H2O	7.48E+00									
Hg	5.80E-08									
TcO2										
Cl2										
CO										
CO2	5.52E-05									
F2										
H2										
I2										
N2										
N2O										
NO										
NO2										
O2										
SO2										
Dicyclopentadiene										
Glycolic Anion	5.61E-08									
H2S										
Glycolic Acid										
Kerosene										
NH3										
Oligomer										
Sulfur										

STREAM NAME	207	208	209	212	213	214	215	216	217	218
SOLID COMPONENTS										
Total Mass Flow (MT)	1.03E+00									
Radionuclides (Ci)										
Am-241	5.78E+00									
C-14	1.31E-01									
Cs-137	1.80E+02									
Ba-137	1.71E+02									
Np-237	3.75E-03									
Pu-239	1.52E+00									
Pu-240	3.76E-01									
Pu-241	4.24E+00									
Sr-90	3.05E+03									
Y-90	3.05E+03									
Tc-99	5.61E-01									
Total Curies	6.47E+03									
Chemicals (MT)										
Ag+	8.87E-05									
Al+3	9.76E-02									
Am+3	1.69E-06									
As+5	1.36E-07									
Ba+2	2.24E-04									
Be+2	1.84E-07									
Bi+3	1.51E-02									
Ca+2	8.67E-03									
Cd+2	3.93E-04									
Ce+3	1.41E-02									
Cm+3	1.05E-09									
Co+3	8.90E-11									
Cr+3	6.92E-03									
Cs+	1.20E-05									
Cu+2	1.13E-05									
Fe+3	4.57E-02									
Hg+2	5.28E-06									
K+	1.77E-03									
La+3	1.38E-03									
Mg+2	4.94E-04									
Mn+4	1.08E-02									
Mo+6	1.93E-06									
Na+	4.15E-02									
Ni+3	1.24E-02									
Np+4	5.33E-06									
Pb+4	1.76E-03									
Pu+4	2.62E-05									
Rh+3	1.15E-05									
Se+6	1.98E-04									
Si+4	1.39E-02									
Sr+2	2.19E-03									
Th+4	1.67E-04									
Ti+4	9.27E-06									
UO2+2	9.25E-02									
Zn+2	3.03E-05									
Cl-	5.39E-04									
CO3-2	6.53E-03									
F-	4.09E-03									
I-	8.36E-08									
NO2-	3.70E-03									
NO3-	5.90E-02									
OH-	2.73E-01									
PO4-3	7.52E-02									
SO4-2	1.53E-03									
TcO4-	5.44E-05									
Cancrinite	1.62E-01									
H2O										
MnO2										
Organic Carbon	5.23E-03									
ZrO2.2H2O	7.16E-02									
Ag2O										
AlPO4										
Al2O3										
Am2O3										
As2O5										
B2O3										
BaO										
BeO										
Bi2O3										
CaO										
CdO										
Ce2O3										
Cm2O3										
Co2O3										
Cr2O3										
Cs2O										
CuO										
Fe2O3										
FeO										
HgO										
K2O										
La2O3										
Li2O										
MgO										
MnO										
MoO3										
Na2O										

STREAM NAME	207	208	209	212	213	214	215	216	217	218
SOLID COMPONENTS										
Chemicals Continued (MT)										
Ni_2O_3										
NpO_2										
PbO_2										
PuO_2										
Pr_2O										
Re_2O_7										
Rh_2O_3										
Ru_2O_3										
SeO_3										
SiO_2										
SO_3										
SnO										
Tc_2O_7										
TeO_3										
ThO_2										
TiO_2										
UO_3										
ZrO										
ZrO_2										
Cement										
Cu										
$CuSO_4$										
Dicyclopentadiene										
Flyash										
Oligomer										
Na Loaded Resin										
Sulfur										

STREAM NAME	219	220	221	222	223	224	225	226	227	228
LIQUID COMPONENTS										
Total Mass Flow (MT)	1.53E+04	1.50E+04	2.33E+03	2.08E+03	9.68E+04		8.56E+04	9.41E+02	8.47E+04	1.12E+04
Volume (L)	1.43E+07	1.39E+07	2.33E+06	2.08E+06	9.51E+07		8.50E+07	9.34E+05	8.41E+07	1.01E+07
Specific Gravity	1.06E+00	1.08E+00	1.00E+00	1.00E+00	1.02E+00		1.01E+00	1.01E+00	1.01E+00	1.10E+00
Radionuclides (Ci)										
Am-241										
C-14										
Cs-137					3.08E+07		2.37E+01	2.37E-02	2.36E+01	3.08E+07
Ba-137					2.93E+07		2.25E+01	2.25E-02	2.25E+01	2.93E+07
Np-237										
Pu-239										
Pu-240										
Pu-241										
Sr-90										
Y-90										
Tc-99										
Total Curies					6.01E+07		4.61E+01	4.61E-02	4.61E+01	6.01E+07
Chemicals (MT)										
Ag+										
Am+3										
As+5										
B+3										
Ba+2										
Be+2										
Bi+3										
Ca+2										
Cd+2										
Ce+3										
Cm+3										
Co+3										
Cs+					1.78E+00		1.36E-06	1.36E-09	1.36E-06	1.78E+00
Cu+2										
Fe+2										
Fe+3										
H+		1.09E+01			2.90E+01		2.03E+01	2.23E-01	2.01E+01	8.69E+00
Hg+2										
K+					2.77E+00		2.13E-06	2.13E-09	2.13E-06	2.77E+00
La+3										
Mg+2										
Mn+2										
Mn+4										
Mo+6										
Na+	6.58E+02	4.09E+02			3.31E+02		2.54E-04	2.54E-07	2.53E-04	3.31E+02
Ni+3										
Np+4										
Pb+4										
Pu+4										
Rb+										
Re+7										
Rh+3										
Ru+3										
Se+6										
Si+4										
Sr+2										
Te+6										
UO2+2										
Zn+2										
Zr+4										
Al(OH)4-										
HO2-										
Cl-										
CO3-2										
Cr(OH)4-										
F-										
I-										
NO2-										
NO3-					2.69E+03		1.25E+03	1.37E+01	1.23E+03	1.44E+03
OH-	4.87E+02	4.87E+02								
PO4-3										
SO4-2										
TcO4-										
H2O	1.41E+04	1.41E+04	2.33E+03	2.08E+03	9.37E+04		8.43E+04	9.27E+02	8.34E+04	9.37E+03
Organic Carbon										
ZrO2:2H2O										
Hg										
TcO2										
Cl2										
CO										
CO2										
F2										
H2										
I2										
N2										
N2O										
NO										
NO2										
O2										
SO2										
Dicyclopentadiene										
Glycolic Anion										
H2S										
Glycolic Acid										
Kerosene										
NH3										
Oligomer										
Sulfur										

STREAM NAME	219	220	221	222	223	224	225	226	227	228
SOLID COMPONENTS										
Total Mass Flow (MT)										
Radionuclides (Ci)										
Am-241										
C-14										
Cs-137										
Ba-137										
Np-237										
Pu-239										
Pu-240										
Pu-241										
Sr-90										
Y-90										
Tc-99										
Total Curies										
Chemicals (MT)										
Ag+										
Al+3										
Am+3										
As+5										
Ba+2										
Be+2										
Bi+3										
Ca+2										
Cd+2										
Ce+3										
Cm+3										
Co+3										
Cr+3										
Cs+										
Cu+2										
Fe+3										
Hg+2										
K+										
La+3										
Mg+2										
Mn+4										
Mo+6										
Na+										
Ni+3										
Np+4										
Pb+4										
Pu+4										
Rh+3										
Se+6										
Si+4										
Sr+2										
Th+4										
Ti+4										
UO2+2										
Zn+2										
Cl-										
CO3-2										
F-										
I-										
NO2-										
NO3-										
OH-										
PO4-3										
SO4-2										
TcO4-										
Cancrinite										
H2O										
MnO2										
Organic Carbon										
ZrO2:2H2O										
Ag2O										
AlPO4										
Al2O3										
Am2O3										
As2O5										
B2O3										
BaO										
BeO										
Bi2O3										
CaO										
CdO										
Ce2O3										
Cm2O3										
Co2O3										
Cr2O3										
Cs2O										
CuO										
Fe2O3										
FeO										
HgO										
K2O										
La2O3										
Li2O										
MgO										
MnO										
MoO3										
Na2O										

STREAM NAME	219	220	221	222	223	224	225	226	227	228
SOLID COMPONENTS										
Chemicals Continued (MT)										
Ni_2O_3										
NpO_2										
PbO_2										
PuO_2										
RbO										
Re_2O_7										
Rh_2O_3										
Ru_2O_3										
SeO_3										
SiO_2										
SO_3										
SrO										
Tc_2O_7										
TeO_3										
ThO_2										
TiO_2										
UO_3										
ZrO										
ZrO_2										
Cement										
Cu										
$CuSO_4$										
Dicyclopentadiene										
Flyash										
Oligomer										
Na Loaded Resin										
Sulfur										

STREAM NAME	229	230	231	232	233	236	237	238	239	240
LIQUID COMPONENTS										
Total Mass Flow (MT)	7.82E+02	1.19E+04	1.00E-07	7.71E+05	7.71E+05	2.60E+03	4.54E+03		1.95E+03	2.33E+03
Volume (L)	5.09E+05	1.07E+07	6.50E-05	6.05E+08	6.05E+08	1.86E+06	3.81E+06		1.95E+06	2.33E+06
Specific Gravity	1.54E+00	1.11E+00	1.54E+00	1.28E+00	1.28E+00	1.39E+00	1.19E+00		1.00E+00	1.00E+00
Radionuclides (Ci)										
Am-241				7.86E+03	7.86E+03					
C-14				3.29E+03	3.29E+03					
Cs-137		3.08E+07		7.29E+05	7.29E+05					
Ba-137		2.93E+07		6.93E+05	6.93E+05					
Np-237				6.92E+00	6.92E+00					
Pu-239				1.64E+03	1.64E+03					
Pu-240				4.28E+02	4.28E+02					
Pu-241				4.80E+03	4.80E+03					
Sr-90				1.84E+06	1.84E+06					
Y-90				1.84E+06	1.84E+06					
Tc-99				2.27E+04	2.27E+04					
Total Curies		6.01E+07		5.14E+06	5.14E+06					
Chemicals (MT)										
Ag+				3.18E-01	3.18E-01					
Am+3				2.29E-03	2.29E-03					
As+5				4.03E-05	4.03E-05					
Bi+3				3.41E-02	3.41E-02					
Ba+2				7.85E-01	7.85E-01					
Be+2				2.41E-05	2.41E-05					
Bi+3				1.17E+01	1.17E+01					
Ca+2				1.64E+01	1.64E+01					
Cd+2				7.58E+00	7.58E+00					
Ce+3				2.35E+00	2.35E+00					
Cm+3				9.45E-08	9.45E-08					
Co+3				1.45E-03	1.45E-03					
Cs+		1.78E+00		4.20E-02	4.20E-02					
Cu+2				9.83E-02	9.83E-02					
Fe+2				1.18E-03	1.18E-03					
Fe+3				3.42E+01	3.42E+01					
H+						2.35E+01	2.35E+01			
Hg+2				5.80E-02	5.80E-02					
K+		2.77E+00		7.00E+02	7.00E+02					
La+3				2.37E-01	2.37E-01					
Mg+2				1.45E-04	1.45E-04					
Mn+2				4.81E-05	4.81E-05					
Mn+4				1.07E+01	1.07E+01					
Mo+6				7.18E-03	7.18E-03					
Na+	2.25E+02	5.55E+02	2.88E-08	8.43E+04	8.43E+04					
Ni+3				8.15E+00	8.15E+00					
Np+4				9.81E-03	9.81E-03					
Pb+4				9.54E+00	9.54E+00					
Pu+4				2.84E-02	2.84E-02					
Rb+				2.38E-04	2.38E-04					
Re+7				1.07E-04	1.07E-04					
Rh+3				8.44E-04	8.44E-04					
Ru+3				1.18E-03	1.18E-03					
Se+6				1.34E-04	1.34E-04					
Si+4				1.58E+01	1.58E+01					
Sr+2				3.78E-01	3.78E-01					
Te+6				8.21E-04	8.21E-04					
UO2+2				1.05E+02	1.05E+02					
Zn+2				7.72E-04	7.72E-04					
Zr+4				2.41E-05	2.41E-05					
Al(OH)4-				1.24E+04	1.24E+04					
HO2-				1.15E-09	1.15E-09					
Cl-				6.74E+02	6.74E+02					
CO3-2				2.65E+03	2.65E+03					
Cr(OH)4-				6.77E+02	6.77E+02					
F-				1.13E+03	1.13E+03					
I-				8.97E-02	8.97E-02					
NO2-		5.00E-04		9.40E+03	9.40E+03					
NO3-		1.44E+03		1.06E+05	1.06E+05	1.46E+03	1.46E+03			
OH-	1.66E+02	1.96E+01	2.13E-08	2.50E+04	2.50E+04					
PO4-3				4.53E+03	4.53E+03					
SO4-2				2.01E+03	2.01E+03					
TcO4-				2.20E+00	2.20E+00					
H2O	3.91E+02	9.92E+03	5.00E-08	5.21E+05	5.21E+05	1.12E+03	3.06E+03		1.95E+03	2.33E+03
Organic Carbon				1.05E+03	1.05E+03					
ZrO2:2H2O				7.48E+00	7.48E+00					
Hg				5.80E-08	5.80E-08					
TcO2										
Cl2										
CO										
CO2										
F2										
H2										
I2										
N2										
N2O										
NO										
NO2										
O2										
SO2										
Dicyclopentadiene										
Glycolic Anion				5.61E-08	5.61E-08					
H2S										
Glycolic Acid										
Kerosene										
NH3										
Oligomer										
Sulfur										

STREAM NAME	229	230	231	232	233	236	237	238	239	240
SOLID COMPONENTS										
Total Mass Flow (MT)				7.76E+02	7.76E+02					
Radionuclides (Ci)										
Am-241				5.78E+00	5.78E+00					
C-14				1.31E-01	1.31E-01					
Cs-137				1.80E+02	1.80E+02					
Ba-137				1.71E+02	1.71E+02					
Np-237				3.75E-03	3.75E-03					
Pu-239				1.52E+00	1.52E+00					
Pu-240				3.76E-01	3.76E-01					
Pu-241				4.24E+00	4.24E+00					
Sr-90				3.05E+03	3.05E+03					
Y-90				3.05E+03	3.05E+03					
Tc-99				5.61E-01	5.61E-01					
Total Curies				6.47E+03	6.47E+03					
Chemicals (MT)										
Ag+				8.87E-05	8.87E-05					
Al+3				9.76E-02	9.76E-02					
Am+3				1.69E-06	1.69E-06					
As+5				1.36E-07	1.36E-07					
Ba+2				2.24E-04	2.24E-04					
Be+2				1.84E-07	1.84E-07					
Bi+3				1.51E-02	1.51E-02					
Ca+2				8.67E-03	8.67E-03					
Cd+2				3.93E-04	3.93E-04					
Ce+3				1.41E-02	1.41E-02					
Cm+3				1.05E-09	1.05E-09					
Co+3				8.90E-11	8.90E-11					
Cr+3				6.92E-03	6.92E-03					
Cs+				1.20E-05	1.20E-05					
Cu+2				1.13E-05	1.13E-05					
Fe+3				4.57E-02	4.57E-02					
Hg+2				5.28E-06	5.28E-06					
K+				1.77E-03	1.77E-03					
La+3				1.38E-03	1.38E-03					
Mg+2				4.94E-04	4.94E-04					
Mn+4				1.08E-02	1.08E-02					
Mo+6				1.93E-06	1.93E-06					
Na+				4.15E-02	4.15E-02					
Ni+3				1.24E-02	1.24E-02					
Np+4				5.33E-06	5.33E-06					
Pb+4				1.76E-03	1.76E-03					
Pu+4				2.62E-05	2.62E-05					
Rh+3				1.15E-05	1.15E-05					
Se+6				1.98E-04	1.98E-04					
Si+4				1.39E-02	1.39E-02					
Sr+2				2.19E-03	2.19E-03					
Th+4				1.67E-04	1.67E-04					
Ti+4				9.27E-06	9.27E-06					
UO2+2				9.25E-02	9.25E-02					
Zn+2				3.03E-05	3.03E-05					
Cl-				5.39E-04	5.39E-04					
CO3-2				6.53E-03	6.53E-03					
F-				4.09E-03	4.09E-03					
I-				8.36E-08	8.36E-08					
NO2-				3.70E-03	3.70E-03					
NO3-				5.90E-02	5.90E-02					
OH-				2.73E-01	2.73E-01					
PO4-3				7.52E-02	7.52E-02					
SO4-2				1.53E-03	1.53E-03					
TcO4-				5.44E-05	5.44E-05					
Cancrinite				1.62E-01	1.62E-01					
H2O										
MnO2										
Organic Carbon				5.23E-03	5.23E-03					
ZrO2:2H2O				7.16E-02	7.16E-02					
Ag2O										
AlPO4										
Al2O3										
Am2O3										
As2O5										
B2O3										
BaO										
BeO										
Bi2O3										
CaO										
CdO										
Ce2O3										
Cm2O3										
Co2O3										
Cr2O3										
Cs2O										
CuO										
Fe2O3										
FeO										
HgO										
K2O										
La2O3										
Li2O										
MgO										
MnO										
MoO3										
Na2O										

STREAM NAME	229	230	231	232	233	236	237	238	239	240
SOLID COMPONENTS										
Chemicals Continued (MT)										
Ni2O3										
NpO2										
PbO2										
PuO2										
Rb2O										
Re2O7										
Rh2O3										
Ru2O3										
SeO3										
SiO2										
SO3										
SrO										
Tc2O7										
TeO3										
ThO2										
TiO2										
UO3										
ZnO										
ZrO2										
Cement										
Cu										
CuSO4										
Dicyclopentadiene										
Flyash										
Oligomer										
Na Loaded Resin				7.75E+02	7.75E+02					
Sulfur										

STREAM NAME	241	242	243	244	246	247	248	249	250	251
LIQUID COMPONENTS										
Total Mass Flow (MT)		1.30E+04	1.41E+04	1.00E-03	2.29E+03	5.86E+02	7.82E+02	1.00E-03	1.00E-03	2.00E-03
Volume (L)		1.30E+07	1.41E+07	1.00E+00	1.49E+06	3.81E+05	5.09E+05	4.46E-01	1.00E+00	1.45E+00
Specific Gravity		1.00E+00	1.00E+00	1.00E+00	1.54E+00	1.54E+00	1.54E+00	2.24E+00	1.00E+00	1.38E+00
Radionuclides (Ci)										
Am-241										
C-14										
Cs-137										
Ba-137										
Np-237										
Pu-239										
Pu-240										
Pu-241										
Sr-90										
Y-90										
Tc-99										
Total Curies										
Chemicals (MT)										
Ag+										
Am+3										
As+5										
B+3										
Ba+2										
Be+2										
Bi+3										
Ca+2										
Cd+2										
Ce+3										
Cm+3										
Co+3										
Cs+										
Cu+2										
Fe+2										
Fe+3										
H+										
Hg+2										
K+										
La+3										
Mg+2										
Mn+2										
Mn+4										
Mo+6										
Na+					6.58E+02	1.69E+02	2.25E+02	5.00E-04		5.00E-04
Ni+3										
Np+4										
Pb+4										
Pu+4										
Rb+										
Re+7										
Rh+3										
Ru+3										
Se+6										
Si+4										
Sr+2										
Te+6										
UO2+2										
Zn+2										
Zr+4										
Al(OH)4-										
BO2-										
Cl-										
CO3-2										
Cr(OH)4-										
F-										
I-										
NO2-								5.00E-04		5.00E-04
NO3-										
OH-					4.87E+02	1.25E+02	1.66E+02			
PO4-3										
SO4-2										
TcO4-										
H2O		1.30E+04	1.41E+04	1.00E-03	1.15E+03	2.93E+02	3.91E+02		1.00E-03	1.00E-03
Organic Carbon										
ZrO2:2H2O										
He										
TcO2										
Cl2										
CO										
CO2										
F2										
H2										
I2										
N2										
N2O										
NO										
NO2										
O2										
SO2										
Dicyclopentadiene										
Glycolic Anion										
H2S										
Glycolic Acid										
Kerosene										
NH3										
Oligomer										
Sulfur										

STREAM NAME	241	242	243	244	246	247	248	249	250	251
SOLID COMPONENTS										
Total Mass Flow (MT)										
Radionuclides (Ci)										
Am-241										
C-14										
Cs-137										
Ba-137										
Np-237										
Pu-239										
Pu-240										
Pu-241										
Sr-90										
Y-90										
Tc-99										
Total Curies										
Chemicals (MT)										
Ag+										
Al+3										
Am+3										
As+5										
Ba+2										
Be+2										
Bi+3										
Ca+2										
Cd+2										
Ce+3										
Cm+3										
Co+3										
Cr+3										
Cs+										
Cu+2										
Fe+3										
Hg+2										
K+										
La+3										
Mg+2										
Mn+4										
Mo+6										
Na+										
Ni+3										
Np+4										
Pb+4										
Pu+4										
Rh+3										
Se+6										
Si+4										
Sr+2										
Th+4										
Ti+4										
UO2+2										
Zn+2										
Cl-										
CO3-2										
F-										
I-										
NO2-										
NO3-										
OH-										
PO4-3										
SO4-2										
TcO4-										
Cancrinite										
H2O										
MnO2										
Organic Carbon										
ZrO2:2H2O										
As2O										
AlPO4										
Al2O3										
Am2O3										
As2O5										
B2O3										
BaO										
BeO										
Bi2O3										
CaO										
CdO										
Ce2O3										
Cm2O3										
Co2O3										
Cr2O3										
Cs2O										
CuO										
Fe2O3										
FeO										
HgO										
K2O										
La2O3										
Li2O										
MgO										
MnO										
MoO3										
Na2O										

STREAM NAME	241	242	243	244	246	247	248	249	250	251
SOLID COMPONENTS										
Chemicals Continued (MT)										
Ni_2O_3										
NpO_2										
PbO_2										
PuO_2										
Rb_2O										
Re_2O_7										
Rh_2O_3										
Ru_2O_3										
SeO_3										
SiO_2										
SO_3										
SrO										
Tc_2O_7										
TeO_3										
ThO_2										
TiO_2										
UO_3										
ZrO										
ZrO_2										
Cement										
Cu										
$CuSO_4$										
Dicyclopentadiene										
Flyash										
Oligomer										
Na Loaded Resin										
Sulfur										

STREAM NAME	263	264	265	266	269	270	271	272	273	300
LIQUID COMPONENTS										
Total Mass Flow (MT)	1.19E+04	1.19E+04				2.33E+03	2.58E+02			1.35E+05
Volume (L)	1.07E+07	1.07E+07				2.33E+06	2.58E+05			1.33E+08
Specific Gravity	1.11E+00	1.11E+00				1.00E+00	1.00E+00			1.01E+00
Radionuclides (Ci)										
Am-241										5.35E+01
C-14										2.24E+01
Cs-137	3.08E+07	3.08E+07								2.16E+05
Ba-137	2.93E+07	2.93E+07								2.05E+05
Np-237										4.71E-02
Pu-239										1.12E+01
Pu-240										2.92E+00
Pu-241										3.27E+01
Sr-90										1.25E+04
Y-90										1.25E+04
Tc-99										1.55E+02
Total Curies	6.01E+07	6.01E+07								4.47E+05
Chemicals (MT)										
Ag+										2.16E-03
Am+3										1.56E-05
As+5										2.74E-07
B+3										2.32E-04
Ba+2										5.34E-03
Be+2										1.64E-07
Bi+3										7.98E-02
Ca+2										1.12E-01
Cd+2										5.16E-02
Ce+3										1.60E-02
Cm+3										6.43E-10
Co+3										9.87E-06
Cs+	1.78E+00	1.78E+00								1.25E-02
Cu+2										6.69E-04
Fe+2										8.06E-06
Fe+3										2.32E-01
H+										
Hg+2										3.95E-04
K+	2.77E+00	2.77E+00								4.78E+00
La+3										1.61E-03
Mg+2										9.87E-07
Mn+2										3.28E-07
Mn+4										7.30E-02
Mo+6										4.89E-05
Na+	5.55E+02	5.55E+02								5.53E+02
Ni+3										5.55E-02
Np+4										6.68E-05
Pb+4										6.49E-02
Pu+4										1.93E-04
Rb+										1.62E-06
Re+7										7.31E-07
Rh+3										5.75E-06
Ru+3										8.00E-06
Se+6										9.11E-07
Si+4										1.08E-01
Sr+2										2.57E-03
Te+6										5.59E-06
UO2+2										7.16E-01
Zn+2										5.26E-06
Zr+4										1.64E-07
Al(OH)4-										8.56E+01
BO2-										1.06E-09
Cl-										4.58E+00
CO3-2										2.10E+01
Cr(OH)4-										4.65E+00
F-										7.68E+00
I-										6.10E-04
NO2-	5.00E-04	5.00E-04								1.07E+02
NO3-	1.44E+03	1.44E+03								7.20E+02
OH-	1.96E+01	1.96E+01								3.46E+02
PO4-3										3.11E+01
SO4-2										1.37E+01
TcO4-										1.50E-02
H2O	9.92E+03	9.92E+03				2.33E+03	2.58E+02			1.33E+05
Organic Carbon										7.15E+00
ZrO2:2H2O										5.09E-02
He										5.33E-08
TcO2										
Cl2										
CO										
CO2										5.08E-05
F2										
H2										
I2										
N2										
N2O										
NO										
NO2										
O2										
SO2										
Dicyclopentadiene										
Glycolic Anion										1.45E+00
H2S										
Glycolic Acid										
Kerosene										
NH3										
Oligomer										
Sulfur										

STREAM NAME	263	264	265	266	269	270	271	272	273	300
SOLID COMPONENTS										
Total Mass Flow (MT)					7.75E+02	7.75E+02	7.75E+02			1.40E+04
Radionuclides (Ci)										
Am-241										9.65E+04
C-14										2.18E+03
Cs-137										3.01E+06
Ba-137										2.86E+06
Np-237										6.27E+01
Pu-239										2.53E+04
Pu-240										6.28E+03
Pu-241										7.07E+04
Sr-90										5.10E+07
Y-90										5.10E+07
Tc-99										9.37E+03
Total Curies										1.08E+08
Chemicals (MT)										
Ag+										1.48E+00
Al+3										7.45E+02
Am+3										2.81E-02
As+5										2.26E-03
Ba+2										3.74E+00
Be+2										3.08E-03
Bi+3										2.52E+02
Ca+2										1.45E+02
Cd+2										6.55E+00
Ce+3										2.35E+02
Cm+3										1.76E-05
Co+3										1.49E-06
Cr+3										5.79E+01
Cs+										2.01E-01
Cu+2										1.88E-01
Fe+3										7.62E+02
Hg+2										8.81E-02
K+										2.96E+01
La+3										2.30E+01
Mg+2										8.25E+00
Mn+4										1.80E+02
Mo+6										3.21E-02
Na+										5.84E+02
Ni+3										2.06E+02
Np+4										8.89E-02
Pb+4										2.93E+01
Pu+4										4.36E-01
Rh+3										1.93E-01
Se+6										3.31E+00
Si+4										2.32E+02
Sr+2										3.66E+01
Th+4										2.79E+00
Ti+4										1.55E-01
UO2+2										1.54E+03
Zn+2										5.06E-01
Cl-										9.00E+00
CO3-2										1.09E+02
F-										6.82E+01
I-										1.40E-03
NO2-										6.18E+01
NO3-										9.85E+02
OH-										3.16E+03
PO4-3										4.85E+02
SO4-2										2.56E+01
TcO4-										9.08E-01
Cancrinite										2.71E+03
H2O										
MnO2										2.83E-05
Organic Carbon										8.73E+01
ZrO2:2H2O										1.20E+03
Ag2O										1.58E-07
AlPO4										6.58E-05
Al2O3										1.97E-04
Am2O3										3.07E-09
As2O5										3.45E-10
B2O3										1.32E+01
BaO										4.15E-07
BeO										8.47E-10
Bi2O3										2.78E-05
CaO										1.51E+00
CdO										7.48E-07
Ce2O3										2.73E-05
Cm2O3										1.91E-12
Co2O3										1.59E-12
Cr2O3										8.69E-06
Cs2O										2.09E-07
CuO										2.35E-08
Fe2O3										1.08E-04
FeO										1.03E-12
HgO										
K2O										4.44E-06
La2O3										2.67E-06
Li2O										3.11E+00
MgO										1.51E+00
MnO										4.20E-14
MoO3										4.79E-09
Na2O										2.88E-04

STREAM NAME	263	264	265	266	269	270	271	272	273	300
SOLID COMPONENTS										
Chemicals Continued (MT)										
Nd2O3										2.88E-05
NpO2										1.00E-08
PbO2										3.36E-06
PuO2										4.91E-08
Rb2O										1.76E-13
Re2O7										9.43E-14
Rh2O3										2.36E-08
Ru2O3										9.82E-13
SeO3										5.28E-07
SiO2										4.37E+01
SO3										1.80E-06
SrO										4.27E-06
Tc2O7										8.46E-08
TeO3										7.63E-13
ThO2										3.15E-07
TiO2										2.56E-08
UO3										1.62E-04
ZrO										6.25E-08
ZrO2										9.18E-05
Cement										
O2										
CuSO4										
Dicyclopentadiene										
Flyash										
Oligomer										
Na Loaded Resin					7.75E+02	7.75E+02	7.75E+02			
Sulfur										

STREAM NAME	301	302	303	304	305	306	307	308	309	310
LIQUID COMPONENTS										
Total Mass Flow (MT)	1.35E+05	1.67E+03	1.33E+05	1.33E+05	1.33E+05	1.03E+05	1.14E+03	1.02E+05	2.97E+04	2.97E+04
Volume (L)	1.33E+08	1.65E+06	1.32E+08	1.32E+08	1.32E+08	1.03E+08	1.14E+06	1.02E+08	2.82E+07	2.82E+07
Specific Gravity	1.01E+00	1.01E+00	1.01E+00	1.01E+00	1.01E+00	1.00E+00	1.00E+00	1.00E+00	1.05E+00	1.05E+00
Radionuclides (Ci)										
Am-241	5.35E+01	6.63E-01	5.28E+01	5.28E+01	5.28E+01	1.84E-05	1.84E-08	1.83E-05	5.28E+01	5.28E+01
C-14	2.24E+01	2.78E-01	2.21E+01	2.21E+01	2.21E+01	7.70E-06	7.70E-09	7.69E-06	2.21E+01	2.21E+01
Cs-137	2.16E+05	2.68E+03	2.14E+05	2.14E+05	2.14E+05	7.43E-02	7.43E-05	7.42E-02	2.14E+05	2.14E+05
Ba-137	2.05E+05	2.55E+03	2.03E+05	2.03E+05	2.03E+05	7.06E-02	7.06E-05	7.05E-02	2.03E+05	2.03E+05
Np-237	4.71E-02	5.83E-04	4.65E-02	4.65E-02	4.65E-02	1.62E-08	1.62E-11	1.62E-08	4.65E-02	4.65E-02
Pu-239	1.12E+01	1.38E-01	1.10E+01	1.10E+01	1.10E+01	3.83E-06	3.83E-09	3.83E-06	1.10E+01	1.10E+01
Pu-240	2.92E+00	3.61E-02	2.88E+00	2.88E+00	2.88E+00	1.00E-06	1.00E-09	1.00E-06	2.88E+00	2.88E+00
Pu-241	3.27E+01	4.05E-01	3.23E+01	3.23E+01	3.23E+01	1.12E-05	1.12E-08	1.12E-05	3.23E+01	3.23E+01
Sr-90	1.25E+04	1.55E+02	1.24E+04	1.24E+04	1.24E+04	4.30E-03	4.30E-06	4.30E-03	1.24E+04	1.24E+04
Y-90	1.25E+04	1.55E+02	1.24E+04	1.24E+04	1.24E+04	4.30E-03	4.30E-06	4.30E-03	1.24E+04	1.24E+04
Tc-99	1.55E+02	1.92E+00	1.53E+02	1.53E+02	1.53E+02	5.32E-05	5.32E-08	5.32E-05	1.53E+02	1.53E+02
Total Curies	4.47E+05	5.54E+03	4.41E+05	4.41E+05	4.41E+05	1.54E-01	1.54E-04	1.53E-01	4.41E+05	4.41E+05
Chemicals (MT)										
Ag+	2.16E-03	2.68E-05	2.14E-03	2.14E-03	2.14E-03	7.43E-10	7.43E-13	7.42E-10	2.14E-03	2.14E-03
Am+3	1.56E-05	1.93E-07	1.54E-05	1.54E-05	1.54E-05	5.35E-12	5.35E-15	5.35E-12	1.54E-05	1.54E-05
As+5	2.74E-07	3.39E-09	2.70E-07	2.70E-07	2.70E-07	9.41E-14	9.41E-17	9.40E-14	2.70E-07	2.70E-07
B+3	2.32E-04	2.87E-06	2.29E-04	2.29E-04	2.29E-04	7.96E-11	7.96E-14	7.95E-11	2.29E-04	2.29E-04
Ba+2	5.34E-03	6.62E-05	5.28E-03	5.28E-03	5.28E-03	1.84E-09	1.84E-12	1.83E-09	5.28E-03	5.28E-03
Be+2	1.64E-07	2.03E-09	1.62E-07	1.62E-07	1.62E-07	5.64E-14	5.64E-17	5.63E-14	1.62E-07	1.62E-07
Bi+3	7.98E-02	9.90E-04	7.88E-02	7.88E-02	7.88E-02	2.74E-08	2.74E-11	2.74E-08	7.88E-02	7.88E-02
Ca+2	1.12E-01	1.38E-03	1.10E-01	1.10E-01	1.10E-01	3.83E-08	3.83E-11	3.82E-08	1.10E-01	1.10E-01
Cd+2	5.16E-02	6.39E-04	5.09E-02	5.09E-02	5.09E-02	1.77E-08	1.77E-11	1.77E-08	5.09E-02	5.09E-02
Ce+3	1.60E-02	1.98E-04	1.58E-02	1.58E-02	1.58E-02	5.49E-09	5.49E-12	5.48E-09	1.58E-02	1.58E-02
Cm+3	6.43E-10	7.96E-12	6.35E-10	6.35E-10	6.35E-10	2.21E-16	2.21E-19	2.21E-16	6.35E-10	6.35E-10
Co+3	9.87E-06	1.22E-07	9.75E-06	9.75E-06	9.75E-06	3.39E-12	3.39E-15	3.39E-12	9.75E-06	9.75E-06
Cs+	1.25E-02	1.55E-04	1.23E-02	1.23E-02	1.23E-02	4.28E-09	4.28E-12	4.28E-09	1.23E-02	1.23E-02
Cu+2	6.69E-04	8.29E-06	6.60E-04	6.60E-04	6.60E-04	2.30E-10	2.30E-13	2.29E-10	6.60E-04	6.60E-04
Fe+2	8.06E-06	9.99E-08	7.96E-06	7.96E-06	7.96E-06	2.77E-12	2.77E-15	2.76E-12	7.96E-06	7.96E-06
Fe+3	2.32E-01	2.88E-03	2.30E-01	2.30E-01	2.30E-01	7.98E-08	7.98E-11	7.98E-08	2.30E-01	2.30E-01
H+										
Hg+2	3.95E-04	4.89E-06	3.90E-04	3.90E-04	3.90E-04	1.36E-10	1.36E-13	1.35E-10	3.90E-04	3.90E-04
K+	4.78E+00	5.92E-02	4.72E+00	4.72E+00	4.72E+00	1.64E-06	1.64E-09	1.64E-06	4.72E+00	4.72E+00
La+3	1.61E-03	2.00E-05	1.59E-03	1.59E-03	1.59E-03	5.54E-10	5.54E-13	5.53E-10	1.59E-03	1.59E-03
Mg+2	9.87E-07	1.22E-08	9.75E-07	9.75E-07	9.75E-07	3.39E-13	3.39E-16	3.39E-13	9.75E-07	9.75E-07
Mn+2	3.28E-07	4.06E-09	3.24E-07	3.24E-07	3.24E-07	1.13E-13	1.13E-16	1.12E-13	3.24E-07	3.24E-07
Mn+4	7.30E-02	9.05E-04	7.21E-02	7.21E-02	7.21E-02	2.51E-08	2.51E-11	2.51E-08	7.21E-02	7.21E-02
Mo+6	4.89E-05	6.06E-07	4.83E-05	4.83E-05	4.83E-05	1.68E-11	1.68E-14	1.68E-11	4.83E-05	4.83E-05
Na+	5.53E+02	6.85E+00	5.46E+02	5.46E+02	5.46E+02	4.66E-04	4.66E-07	4.65E-04	5.46E+02	5.46E+02
Ni+3	5.55E-02	6.87E-04	5.48E-02	5.48E-02	5.48E-02	1.91E-08	1.91E-11	1.90E-08	5.48E-02	5.48E-02
Np+4	6.68E-05	8.28E-07	6.59E-05	6.59E-05	6.59E-05	2.29E-11	2.29E-14	2.29E-11	6.59E-05	6.59E-05
Pb+4	6.49E-02	8.04E-04	6.41E-02	6.41E-02	6.41E-02	2.23E-08	2.23E-11	2.23E-08	6.41E-02	6.41E-02
Pu+4	1.93E-04	2.39E-06	1.91E-04	1.91E-04	1.91E-04	6.63E-11	6.63E-14	6.62E-11	1.91E-04	1.91E-04
Rb+	1.62E-06	2.01E-08	1.60E-06	1.60E-06	1.60E-06	5.57E-13	5.57E-16	5.56E-13	1.60E-06	1.60E-06
Ret+7	7.31E-07	9.06E-09	7.22E-07	7.22E-07	7.22E-07	2.51E-13	2.51E-16	2.51E-13	7.22E-07	7.22E-07
Rh+3	5.75E-06	7.12E-08	5.67E-06	5.67E-06	5.67E-06	1.97E-12	1.97E-15	1.97E-12	5.67E-06	5.67E-06
Ru+3	8.00E-06	9.92E-08	7.90E-06	7.90E-06	7.90E-06	2.75E-12	2.75E-15	2.75E-12	7.90E-06	7.90E-06
Se+6	9.11E-07	1.13E-08	9.00E-07	9.00E-07	9.00E-07	3.13E-13	3.13E-16	3.13E-13	9.00E-07	9.00E-07
Si+4	1.08E-01	1.34E-03	1.06E-01	1.06E-01	1.06E-01	3.70E-08	3.70E-11	3.70E-08	1.06E-01	1.06E-01
Sr+2	2.57E-03	3.19E-05	2.54E-03	2.54E-03	2.54E-03	8.83E-10	8.83E-13	8.82E-10	2.54E-03	2.54E-03
Te+6	5.59E-06	6.93E-08	5.52E-06	5.52E-06	5.52E-06	1.92E-12	1.92E-15	1.92E-12	5.52E-06	5.52E-06
UO2+2	7.16E-01	8.88E-03	7.07E-01	7.07E-01	7.07E-01	2.46E-07	2.46E-10	2.46E-07	7.07E-01	7.07E-01
Zn+2	5.26E-06	6.51E-08	5.19E-06	5.19E-06	5.19E-06	1.81E-12	1.81E-15	1.80E-12	5.19E-06	5.19E-06
Zr+4	1.64E-07	2.03E-09	1.62E-07	1.62E-07	1.62E-07	5.64E-14	5.64E-17	5.63E-14	1.62E-07	1.62E-07
Al(OH)4-	8.56E+01	1.06E+00	8.46E+01	8.46E+01	8.46E+01	2.94E-05	2.94E-08	2.94E-05	8.46E+01	8.46E+01
BO2-	1.06E-09	1.31E-11	1.05E-09	1.05E-09	1.05E-09	3.63E-16	3.63E-19	3.63E-16	1.05E-09	1.05E-09
Cl-	4.58E+00	5.68E-02	4.53E+00	4.53E+00	4.53E+00	3.15E-06	3.15E-09	3.15E-06	4.53E+00	4.53E+00
CO3-2	2.10E+01	2.60E-01	2.07E+01	2.07E+01	2.07E+01	7.20E-06	7.20E-09	7.20E-06	2.07E+01	2.07E+01
Cr(OH)4-	4.65E+00	5.77E-02	4.60E+00	4.60E+00	4.60E+00	1.60E-06	1.60E-09	1.60E-06	4.60E+00	4.60E+00
F-	7.68E+00	9.52E-02	7.59E+00	7.59E+00	7.59E+00	2.64E-06	2.64E-09	2.64E-06	7.59E+00	7.59E+00
I-	6.10E-04	7.56E-06	6.03E-04	6.03E-04	6.03E-04	2.10E-10	2.10E-13	2.09E-10	6.03E-04	6.03E-04
NO2-	1.07E+02	1.33E+00	1.06E+02	1.06E+02	1.06E+02	3.68E-05	3.68E-08	3.68E-05	1.06E+02	1.06E+02
NO3-	7.20E+02	8.92E+00	7.11E+02	7.11E+02	7.11E+02	4.94E-04	4.94E-07	4.94E-04	7.11E+02	7.11E+02
OH-	3.46E+02	4.29E+00	3.42E+02	3.42E+02	3.42E+02	1.19E-04	1.19E-07	1.19E-04	3.42E+02	3.42E+02
PO4-3	3.11E+01	3.86E-01	3.07E+01	3.07E+01	3.07E+01	1.07E-05	1.07E-08	1.07E-05	3.07E+01	3.07E+01
SO4-2	1.37E+01	1.69E-01	1.35E+01	1.35E+01	1.35E+01	4.69E-06	4.69E-09	4.69E-06	1.35E+01	1.35E+01
TcO4-	1.50E-02	1.86E-04	1.48E-02	1.48E-02	1.48E-02	5.15E-09	5.15E-12	5.15E-09	1.48E-02	1.48E-02
H2O	1.33E+05	1.64E+03	1.31E+05	1.31E+05	1.31E+05	1.03E+05	1.14E+03	1.02E+05	2.78E+04	2.78E+04
Organic Carbon	7.15E+00	8.86E-02	7.06E+00	7.06E+00	7.06E+00	7.01E-06	7.01E-09	7.01E-06	7.06E+00	7.06E+00
ZrO2:2H2O	5.09E-02	6.31E-04	5.03E-02	5.03E-02	5.03E-02	1.75E-08	1.75E-11	1.75E-08	5.03E-02	5.03E-02
Hg	5.33E-08	6.60E-10	5.26E-08	5.26E-08	5.26E-08	1.83E-14	1.83E-17	1.83E-14	5.26E-08	5.26E-08
TeO2										
Cl2										
CO										
CO2	5.08E-05	6.29E-07	5.01E-05	5.01E-05	5.01E-05	5.01E-05	5.01E-08	5.01E-05		
F2										
H2										
T2										
N2										
N2O										
NO										
NO2										
O2										
SO2										
Dicyclopentadiene										
Glycolic Anion	1.45E+00	1.80E-02	1.43E+00	1.43E+00	1.43E+00	4.98E-07	4.98E-10	4.98E-07	1.43E+00	1.43E+00
H2S										
Glycolic Acid										
Kerosene										
NH3										
Oligomer										
Sulfur										

STREAM NAME	301	302	303	304	305	306	307	308	309	310
SOLID COMPONENTS										
Total Mass Flow (MT)	1.40E+04	1.39E+04	1.33E+02	1.33E+02	1.33E+02				1.33E+02	1.33E+02
Radionuclides (Ci)										
Am-241	9.65E+04	9.55E+04	9.14E+02	9.14E+02	9.14E+02				9.14E+02	9.14E+02
C-14	2.18E+03	2.16E+03	2.07E+01	2.07E+01	2.07E+01				2.07E+01	2.07E+01
Cs-137	3.01E+06	2.98E+06	2.85E+04	2.85E+04	2.85E+04				2.85E+04	2.85E+04
Ba-137	2.86E+06	2.83E+06	2.71E+04	2.71E+04	2.71E+04				2.71E+04	2.71E+04
Np-237	6.27E+01	6.21E+01	5.94E-01	5.94E-01	5.94E-01				5.94E-01	5.94E-01
Pu-239	2.53E+04	2.51E+04	2.40E+02	2.40E+02	2.40E+02				2.40E+02	2.40E+02
Pu-240	6.28E+03	6.22E+03	5.95E+01	5.95E+01	5.95E+01				5.95E+01	5.95E+01
Pu-241	7.07E+04	7.00E+04	6.70E+02	6.70E+02	6.70E+02				6.70E+02	6.70E+02
Sr-90	5.10E+07	5.05E+07	4.83E+05	4.83E+05	4.83E+05				4.83E+05	4.83E+05
Y-90	5.10E+07	5.05E+07	4.83E+05	4.83E+05	4.83E+05				4.83E+05	4.83E+05
Tc-99	9.37E+03	9.28E+03	8.88E+01	8.88E+01	8.88E+01				8.88E+01	8.88E+01
Total Curies	1.08E+08	1.07E+08	1.02E+06	1.02E+06	1.02E+06				1.02E+06	1.02E+06
Chemicals (MT)										
Ag+	1.48E+00	1.47E+00	1.40E-02	1.40E-02	1.40E-02				1.40E-02	1.40E-02
Al+3	7.45E+02	7.38E+02	7.06E+00	7.06E+00	7.06E+00				7.06E+00	7.06E+00
Am+3	2.81E-02	2.79E-02	2.66E-04	2.66E-04	2.66E-04				2.66E-04	2.66E-04
As+5	2.26E-03	2.24E-03	2.15E-05	2.15E-05	2.15E-05				2.15E-05	2.15E-05
Ba+2	3.74E+00	3.71E+00	3.55E-02	3.55E-02	3.55E-02				3.55E-02	3.55E-02
Be+2	3.08E-03	3.05E-03	2.91E-05	2.91E-05	2.91E-05				2.91E-05	2.91E-05
Bi+3	2.52E+02	2.49E+02	2.38E+00	2.38E+00	2.38E+00				2.38E+00	2.38E+00
Ca+2	1.45E+02	1.43E+02	1.37E+00	1.37E+00	1.37E+00				1.37E+00	1.37E+00
Cd+2	6.55E+00	6.49E+00	6.21E-02	6.21E-02	6.21E-02				6.21E-02	6.21E-02
Ce+3	2.35E+02	2.33E+02	2.23E+00	2.23E+00	2.23E+00				2.23E+00	2.23E+00
Cm+3	1.76E-05	1.74E-05	1.66E-07	1.66E-07	1.66E-07				1.66E-07	1.66E-07
Co+3	1.49E-06	1.47E-06	1.41E-08	1.41E-08	1.41E-08				1.41E-08	1.41E-08
Cr+3	5.79E+01	5.73E+01	5.49E-01	5.49E-01	5.49E-01				5.49E-01	5.49E-01
Cs+	2.01E-01	1.99E-01	1.90E-03	1.90E-03	1.90E-03				1.90E-03	1.90E-03
Cu+2	1.88E-01	1.87E-01	1.78E-03	1.78E-03	1.78E-03				1.78E-03	1.78E-03
Fe+3	7.62E+02	7.55E+02	7.22E+00	7.22E+00	7.22E+00				7.22E+00	7.22E+00
Hg+2	8.81E-02	8.73E-02	8.35E-04	8.35E-04	8.35E-04				8.35E-04	8.35E-04
K+	2.96E+01	2.93E+01	2.81E-01	2.81E-01	2.81E-01				2.81E-01	2.81E-01
La+3	2.30E+01	2.27E+01	2.17E-01	2.17E-01	2.17E-01				2.17E-01	2.17E-01
Mg+2	8.25E+00	8.17E+00	7.82E-02	7.82E-02	7.82E-02				7.82E-02	7.82E-02
Mn+4	1.80E+02	1.78E+02	1.71E+00	1.71E+00	1.71E+00				1.71E+00	1.71E+00
Mo+6	3.21E-02	3.18E-02	3.05E-04	3.05E-04	3.05E-04				3.05E-04	3.05E-04
Na+	5.84E+02	5.78E+02	5.53E+00	5.53E+00	5.53E+00				5.53E+00	5.53E+00
Ni+3	2.06E+02	2.04E+02	1.95E+00	1.95E+00	1.95E+00				1.95E+00	1.95E+00
Np+4	8.89E-02	8.80E-02	8.42E-04	8.42E-04	8.42E-04				8.42E-04	8.42E-04
Pb+4	2.93E+01	2.90E+01	2.78E-01	2.78E-01	2.78E-01				2.78E-01	2.78E-01
Pu+4	4.36E-01	4.32E-01	4.14E-03	4.14E-03	4.14E-03				4.14E-03	4.14E-03
Rh+3	1.93E-01	1.91E-01	1.83E-03	1.83E-03	1.83E-03				1.83E-03	1.83E-03
Se+6	3.31E+00	3.28E+00	3.14E-02	3.14E-02	3.14E-02				3.14E-02	3.14E-02
Si+4	2.32E+02	2.30E+02	2.20E+00	2.20E+00	2.20E+00				2.20E+00	2.20E+00
Sr+2	3.66E+01	3.62E+01	3.46E-01	3.46E-01	3.46E-01				3.46E-01	3.46E-01
Th+4	2.79E+00	2.76E+00	2.64E-02	2.64E-02	2.64E-02				2.64E-02	2.64E-02
Ti+4	1.55E-01	1.53E-01	1.47E-03	1.47E-03	1.47E-03				1.47E-03	1.47E-03
UO2+2	1.54E+03	1.53E+03	1.46E+01	1.46E+01	1.46E+01				1.46E+01	1.46E+01
Zn+2	5.06E-01	5.02E-01	4.80E-03	4.80E-03	4.80E-03				4.80E-03	4.80E-03
Cl-	9.00E+00	8.91E+00	8.53E-02	8.53E-02	8.53E-02				8.53E-02	8.53E-02
CO3-2	1.09E+02	1.08E+02	1.03E+00	1.03E+00	1.03E+00				1.03E+00	1.03E+00
F-	6.82E+01	6.75E+01	6.46E-01	6.46E-01	6.46E-01				6.46E-01	6.46E-01
I-	1.40E-03	1.38E-03	1.32E-05	1.32E-05	1.32E-05				1.32E-05	1.32E-05
NO2-	6.18E+01	6.12E+01	5.85E-01	5.85E-01	5.85E-01				5.85E-01	5.85E-01
NO3-	9.85E+02	9.76E+02	9.33E+00	9.33E+00	9.33E+00				9.33E+00	9.33E+00
OH-	3.16E+03	3.13E+03	2.99E+01	2.99E+01	2.99E+01				2.99E+01	2.99E+01
PO4-3	4.85E+02	4.81E+02	4.60E+00	4.60E+00	4.60E+00				4.60E+00	4.60E+00
SO4-2	2.56E+01	2.53E+01	2.42E-01	2.42E-01	2.42E-01				2.42E-01	2.42E-01
TcO4-	9.08E-01	8.99E-01	8.60E-03	8.60E-03	8.60E-03				8.60E-03	8.60E-03
Cancrinite	2.71E+03	2.68E+03	2.56E+01	2.56E+01	2.56E+01				2.56E+01	2.56E+01
H2O										
MnO2	2.83E-05	2.80E-05	2.68E-07	2.68E-07	2.68E-07				2.68E-07	2.68E-07
Organic Carbon	8.73E+01	8.64E+01	8.27E-01	8.27E-01	8.27E-01				8.27E-01	8.27E-01
ZrO2:2H2O	1.20E+03	1.18E+03	1.13E+01	1.13E+01	1.13E+01				1.13E+01	1.13E+01
Ag2O	1.58E-07	1.57E-07	1.50E-09	1.50E-09	1.50E-09				1.50E-09	1.50E-09
AlPO4	6.58E-05	6.52E-05	6.23E-07	6.23E-07	6.23E-07				6.23E-07	6.23E-07
Al2O3	1.97E-04	1.95E-04	1.87E-06	1.87E-06	1.87E-06				1.87E-06	1.87E-06
Am2O3	3.07E-09	3.04E-09	2.91E-11	2.91E-11	2.91E-11				2.91E-11	2.91E-11
As2O5	3.45E-10	3.41E-10	3.26E-12	3.26E-12	3.26E-12				3.26E-12	3.26E-12
B2O3	1.32E+01	1.31E+01	1.25E-01	1.25E-01	1.25E-01				1.25E-01	1.25E-01
BaO	4.15E-07	4.11E-07	3.93E-09	3.93E-09	3.93E-09				3.93E-09	3.93E-09
BeO	8.47E-10	8.39E-10	8.02E-12	8.02E-12	8.02E-12				8.02E-12	8.02E-12
Bi2O3	2.78E-05	2.76E-05	2.64E-07	2.64E-07	2.64E-07				2.64E-07	2.64E-07
CaO	1.51E+00	1.50E+00	1.43E-02	1.43E-02	1.43E-02				1.43E-02	1.43E-02
CdO	7.48E-07	7.41E-07	7.09E-09	7.09E-09	7.09E-09				7.09E-09	7.09E-09
Ce2O3	2.73E-05	2.71E-05	2.59E-07	2.59E-07	2.59E-07				2.59E-07	2.59E-07
Cm2O3	1.91E-12	1.89E-12	1.81E-14	1.81E-14	1.81E-14				1.81E-14	1.81E-14
Co2O3	1.59E-12	1.57E-12	1.50E-14	1.50E-14	1.50E-14				1.50E-14	1.50E-14
Cr2O3	8.69E-06	8.60E-06	8.23E-08	8.23E-08	8.23E-08				8.23E-08	8.23E-08
Cs2O	2.09E-07	2.07E-07	1.98E-09	1.98E-09	1.98E-09				1.98E-09	1.98E-09
CuO	2.35E-08	2.33E-08	2.22E-10	2.22E-10	2.22E-10				2.22E-10	2.22E-10
Fe2O3	1.08E-04	1.07E-04	1.03E-06	1.03E-06	1.03E-06				1.03E-06	1.03E-06
FeO	1.03E-12	1.02E-12	9.74E-15	9.74E-15	9.74E-15				9.74E-15	9.74E-15
HgO										
K2O	4.44E-06	4.40E-06	4.21E-08	4.21E-08	4.21E-08				4.21E-08	4.21E-08
La2O3	2.67E-06	2.64E-06	2.53E-08	2.53E-08	2.53E-08				2.53E-08	2.53E-08
Li2O	3.11E+00	3.08E+00	2.95E-02	2.95E-02	2.95E-02				2.95E-02	2.95E-02
MgO	1.51E+00	1.50E+00	1.43E-02	1.43E-02	1.43E-02				1.43E-02	1.43E-02
MnO	4.20E-14	4.16E-14	3.98E-16	3.98E-16	3.98E-16				3.98E-16	3.98E-16
MoO3	4.79E-09	4.75E-09	4.54E-11	4.54E-11	4.54E-11				4.54E-11	4.54E-11
Na2O	2.88E-04	2.85E-04	2.73E-06	2.73E-06	2.73E-06				2.73E-06	2.73E-06

STREAM NAME	301	302	303	304	305	306	307	308	309	310
SOLID COMPONENTS										
Chemicals Continued (MT)										
Ni2O3	2.88E-05	2.86E-05	2.73E-07	2.73E-07	2.73E-07				2.73E-07	2.73E-07
NpO2	1.00E-08	9.92E-09	9.49E-11	9.49E-11	9.49E-11				9.49E-11	9.49E-11
HfO2	3.36E-06	3.33E-06	3.19E-08	3.19E-08	3.19E-08				3.19E-08	3.19E-08
PuO2	4.91E-08	4.86E-08	4.65E-10	4.65E-10	4.65E-10				4.65E-10	4.65E-10
Rh2O	1.76E-13	1.74E-13	1.67E-15	1.67E-15	1.67E-15				1.67E-15	1.67E-15
Re2O7	9.43E-14	9.34E-14	8.93E-16	8.93E-16	8.93E-16				8.93E-16	8.93E-16
Rh2O3	2.36E-08	2.34E-08	2.23E-10	2.23E-10	2.23E-10				2.23E-10	2.23E-10
Ru2O3	9.82E-13	9.73E-13	9.31E-15	9.31E-15	9.31E-15				9.31E-15	9.31E-15
SeO3	5.28E-07	5.23E-07	5.00E-09	5.00E-09	5.00E-09				5.00E-09	5.00E-09
SiO2	4.37E+01	4.33E+01	4.14E-01	4.14E-01	4.14E-01				4.14E-01	4.14E-01
SO3	1.80E-06	1.78E-06	1.70E-08	1.70E-08	1.70E-08				1.70E-08	1.70E-08
SrO	4.27E-06	4.23E-06	4.05E-08	4.05E-08	4.05E-08				4.05E-08	4.05E-08
Tc2O7	8.46E-08	8.38E-08	8.01E-10	8.01E-10	8.01E-10				8.01E-10	8.01E-10
TeO3	7.63E-13	7.56E-13	7.23E-15	7.23E-15	7.23E-15				7.23E-15	7.23E-15
ThO2	3.15E-07	3.12E-07	2.98E-09	2.98E-09	2.98E-09				2.98E-09	2.98E-09
TiO2	2.56E-08	2.54E-08	2.42E-10	2.42E-10	2.42E-10				2.42E-10	2.42E-10
UO3	1.62E-04	1.61E-04	1.54E-06	1.54E-06	1.54E-06				1.54E-06	1.54E-06
ZrO	6.25E-08	6.19E-08	5.92E-10	5.92E-10	5.92E-10				5.92E-10	5.92E-10
ZrO2	9.18E-05	9.09E-05	8.69E-07	8.69E-07	8.69E-07				8.69E-07	8.69E-07
Cement										
Cu										
CuSO4										
Dicyclopentadiene										
Flyash										
Oligomer										
Na Loaded Resin										
Sulfur										

STREAM NAME	311	312	313	314	315	316	317	318	319	320
LIQUID COMPONENTS										
Total Mass Flow (MT)	3.14E+04	5.64E+04	5.67E+04		6.04E+03		5.94E+04	5.64E+04	5.67E+04	6.78E+02
Volume (L)	2.99E+07	5.37E+07	5.47E+07		6.04E+06		5.94E+07	5.37E+07	5.47E+07	6.78E+05
Specific Gravity	1.05E+00	1.05E+00	1.04E+00		1.00E+00		1.00E+00	1.05E+00	1.04E+00	1.00E+00
Radionuclides (Ci)										
Am-241	5.35E+01	5.35E+01	5.35E+01					5.35E+01	5.35E+01	2.67E-04
C-14	2.24E+01	2.24E+01	2.24E+01				2.57E+03	2.24E+01	2.24E+01	1.12E-04
Cs-137	2.16E+05	3.11E+07	3.10E+07					3.11E+07	3.10E+07	1.55E+02
Ba-137	2.05E+05	2.95E+07	2.95E+07					2.95E+07	2.95E+07	1.48E+02
Np-237	4.71E-02	4.71E-02	4.71E-02					4.71E-02	4.71E-02	2.35E-07
Pu-239	1.12E+01	1.12E+01	1.12E+01					1.12E+01	1.12E+01	5.57E-05
Pu-240	2.92E+00	2.92E+00	2.92E+00					2.92E+00	2.92E+00	1.46E-05
Pu-241	3.27E+01	3.27E+01	3.27E+01					3.27E+01	3.27E+01	1.63E-04
Sr-90	1.25E+04	1.25E+04	1.25E+04					1.25E+04	1.25E+04	6.26E-02
Y-90	1.25E+04	1.25E+04	1.25E+04					1.25E+04	1.25E+04	6.26E-02
Tc-99	1.55E+02	9.19E+03	9.19E+03				9.28E+03	9.19E+03	9.19E+03	4.59E-02
Total Curies	4.47E+05	6.06E+07	6.06E+07				1.19E+04	6.06E+07	6.06E+07	3.03E+02
Chemicals (MT)										
Ag+	2.16E-03	2.16E-03	2.16E-03					2.16E-03	2.16E-03	1.08E-08
Am+3	1.56E-05	1.56E-05	1.56E-05					1.56E-05	1.56E-05	7.79E-11
As+5	2.74E-07	2.74E-07	2.74E-07					2.74E-07	2.74E-07	1.37E-12
B+3	2.32E-04	2.32E-04	2.32E-04					2.32E-04	2.32E-04	1.16E-09
Ba+2	5.34E-03	5.34E-03	5.34E-03					5.34E-03	5.34E-03	2.67E-08
Be+2	1.64E-07	1.64E-07	1.64E-07					1.64E-07	1.64E-07	8.20E-13
Bi+3	7.98E-02	7.98E-02	7.98E-02					7.98E-02	7.98E-02	3.99E-07
Ca+2	1.12E-01	1.12E-01	1.11E-01					1.12E-01	1.11E-01	5.57E-07
Cd+2	5.16E-02	5.16E-02	5.16E-02					5.16E-02	5.16E-02	2.58E-07
Ce+3	1.60E-02	1.60E-02	1.60E-02					1.60E-02	1.60E-02	7.99E-08
Cm+3	6.43E-10	6.43E-10	6.43E-10					6.43E-10	6.43E-10	3.21E-15
Co+3	9.87E-06	9.87E-06	9.87E-06					9.87E-06	9.87E-06	4.94E-11
Cs+	1.25E-02	1.79E+00	1.79E+00					1.79E+00	1.79E+00	8.95E-06
Cu+2	6.69E-04	6.69E-04	6.69E-04					6.69E-04	6.69E-04	3.34E-09
Fe+2	8.06E-06	8.06E-06	8.06E-06					8.06E-06	8.06E-06	4.03E-11
Fe+3	2.32E-01	2.32E-01	2.32E-01					2.32E-01	2.32E-01	1.16E-06
H+		5.17E-01	5.17E-01					5.17E-01	5.17E-01	2.58E-06
Hg+2	3.95E-04	3.95E-04	3.95E-04					3.95E-04	3.95E-04	1.97E-09
K+	4.78E+00	7.55E+00	7.55E+00					7.55E+00	7.55E+00	3.78E-05
La+3	1.61E-03	1.61E-03	1.61E-03					1.61E-03	1.61E-03	8.06E-09
Mg+2	9.87E-07	9.87E-07	9.87E-07					9.87E-07	9.87E-07	4.93E-12
Mn+2	3.28E-07	3.28E-07	3.28E-07					3.28E-07	3.28E-07	1.64E-12
Mn+4	7.30E-02	7.30E-02	7.30E-02					7.30E-02	7.30E-02	3.65E-07
Mo+6	4.89E-05	4.89E-05	4.89E-05					4.89E-05	4.89E-05	2.44E-10
Na+	5.53E+02	1.11E+03	1.11E+03					1.11E+03	1.11E+03	5.54E-03
Ni+3	5.55E-02	5.55E-02	5.55E-02					5.55E-02	5.55E-02	2.77E-07
Np+4	6.68E-05	6.68E-05	6.68E-05					6.68E-05	6.68E-05	3.34E-10
Pb+4	6.49E-02	6.49E-02	6.49E-02					6.49E-02	6.49E-02	3.25E-07
Pu+4	1.93E-04	1.93E-04	1.93E-04					1.93E-04	1.93E-04	9.65E-10
Rb+	1.62E-06	1.62E-06	1.62E-06					1.62E-06	1.62E-06	8.11E-12
Re+7	7.31E-07	7.31E-07	7.31E-07					7.31E-07	7.31E-07	3.65E-12
Rh+3	5.75E-06	5.75E-06	5.75E-06					5.75E-06	5.75E-06	2.87E-11
Ru+3	8.00E-06	8.00E-06	8.00E-06					8.00E-06	8.00E-06	4.00E-11
Se+6	9.11E-07	9.11E-07	9.11E-07					9.11E-07	9.11E-07	4.55E-12
Si+4	1.08E-01	1.08E-01	1.08E-01					1.08E-01	1.08E-01	5.38E-07
Sr+2	2.57E-03	2.57E-03	2.57E-03					2.57E-03	2.57E-03	1.29E-08
Te+6	5.59E-06	5.59E-06	5.59E-06					5.59E-06	5.59E-06	2.79E-11
UO2+2	7.16E-01	7.16E-01	7.16E-01					7.16E-01	7.16E-01	3.58E-06
Zn+2	5.26E-06	5.26E-06	5.25E-06					5.26E-06	5.25E-06	2.63E-11
Zr+4	1.64E-07	1.64E-07	1.64E-07					1.64E-07	1.64E-07	8.20E-13
Al(OH)4-	8.56E+01	8.56E+01	8.56E+01					8.56E+01	8.56E+01	4.28E-04
BO2-	1.06E-09	1.06E-09	1.06E-09					1.06E-09	1.06E-09	5.29E-15
Cl-	4.58E+00	4.58E+00	4.58E+00					4.58E+00	4.58E+00	2.29E-05
CO3-2	2.10E+01	2.10E+01						2.10E+01		
Cr(OH)4-	4.65E+00	4.65E+00	4.65E+00					4.65E+00	4.65E+00	2.33E-05
F-	7.68E+00	7.68E+00	7.68E+00					7.68E+00	7.68E+00	3.84E-05
I-	6.10E-04	6.10E-04	6.10E-04					6.10E-04	6.10E-04	3.05E-09
NO2-	1.07E+02	1.07E+02	5.36E+01					1.07E+02	5.36E+01	2.68E-04
NO3-	7.20E+02	2.19E+03	2.19E+03					2.19E+03	2.19E+03	1.09E-02
OH-	3.46E+02	3.66E+02						3.66E+02		
PO4-3	3.11E+01	3.11E+01	3.11E+01					3.11E+01	3.11E+01	1.56E-04
SO4-2	1.37E+01	1.79E+01	1.79E+01					1.79E+01	1.79E+01	8.95E-05
TcO4-	1.50E-02	8.90E-01	8.90E-01					8.90E-01	8.90E-01	4.45E-06
H2O	2.95E+04	5.24E+04	4.90E+04		1.78E+03		5.23E+04	5.24E+04	4.90E+04	6.22E+02
Organic Carbon	7.15E+00	7.15E+00	7.14E+00					7.15E+00	7.14E+00	2.50E-04
ZrO2:2H2O	5.09E-02	5.09E-02	5.09E-02					5.09E-02	5.09E-02	2.55E-07
Hg	5.33E-08	8.34E-02	8.34E-03				9.69E-02	8.34E-02	8.34E-03	3.75E-02
TcO2							7.22E-01			
Cl2							1.36E-02			
CO										
CO2	6.29E-07	6.29E-07					5.34E+03	6.29E-07		4.39E+01
F2							7.60E-02			
H2										
I2							2.01E-03			
N2							1.84E+02			
N2O			1.71E+01				1.71E+01		1.71E+01	8.54E-04
NO							1.24E+03			1.17E+01
NO2							1.46E+02			
O2							1.59E+02			
SO2							1.45E+01			
Dicyclopentadiene										
Glycolic Anion	1.45E+00	1.45E+00	4.19E+03					1.45E+00	4.19E+03	1.47E-01
H2S										
Glycolic Acid					4.27E+03					
Kerosene										
NH3							3.66E+00			
Oligomer										
Sulfur										

STREAM NAME	311	312	313	314	315	316	317	318	319	320
SOLID COMPONENTS										
Total Mass Flow (MT)	1.40E+04	1.41E+04	2.54E+04	1.18E+04			4.86E+01	1.41E+04	2.54E+04	1.27E-01
Radionuclides (Ci)										
Am-241	9.65E+04	9.66E+04	9.66E+04				1.94E+02	9.66E+04	9.66E+04	4.83E-01
C-14	2.18E+03	2.18E+03	2.18E+03					2.18E+03	2.18E+03	1.09E-02
Cs-137	3.01E+06	3.08E+06	3.08E+06				6.82E+04	3.08E+06	3.08E+06	1.54E+01
Ba-137	2.86E+06	2.92E+06	2.92E+06				6.48E+04	2.92E+06	2.92E+06	1.46E+01
Np-237	6.27E+01	6.28E+01	6.28E+01				1.26E-01	6.28E+01	6.28E+01	3.14E-04
Pu-239	2.53E+04	2.54E+04	2.54E+04				5.07E+01	2.54E+04	2.54E+04	1.27E-01
Pu-240	6.28E+03	6.30E+03	6.30E+03				1.26E+01	6.30E+03	6.30E+03	3.15E-02
Pu-241	7.07E+04	7.09E+04	7.09E+04				1.42E+02	7.09E+04	7.09E+04	3.54E-01
Sr-90	5.10E+07	5.11E+07	5.11E+07				1.02E+05	5.11E+07	5.11E+07	2.55E+02
Y-90	5.10E+07	5.11E+07	5.11E+07				1.02E+05	5.11E+07	5.11E+07	2.55E+02
Tc-99	9.37E+03	9.39E+03	9.39E+03				1.86E+01	9.39E+03	9.39E+03	4.69E-02
Total Curies	1.08E+08	1.08E+08	1.08E+08				3.38E+05	1.08E+08	1.08E+08	5.42E+02
Chemicals (MT)										
Ag+	1.48E+00	1.48E+00	1.48E+00					1.48E+00	1.48E+00	7.40E-06
Al+3	7.45E+02	7.45E+02	7.45E+02					7.45E+02	7.45E+02	3.73E-03
Am+3	2.81E-02	2.81E-02	2.81E-02					2.81E-02	2.81E-02	1.41E-07
As+5	2.26E-03	2.26E-03	2.26E-03					2.26E-03	2.26E-03	1.13E-08
Ba+2	3.74E+00	3.74E+00	3.74E+00					3.74E+00	3.74E+00	1.87E-05
Be+2	3.08E-03	3.08E-03	3.08E-03					3.08E-03	3.08E-03	1.54E-08
Bi+3	2.52E+02	2.52E+02	2.52E+02					2.52E+02	2.52E+02	1.26E-03
Ca+2	1.45E+02	1.45E+02	1.45E+02					1.45E+02	1.45E+02	7.24E-04
Cd+2	6.55E+00	6.55E+00	6.55E+00					6.55E+00	6.55E+00	3.28E-05
Ce+3	2.35E+02	2.35E+02	2.35E+02					2.35E+02	2.35E+02	1.18E-03
Cm+3	1.76E-05	1.76E-05	1.76E-05					1.76E-05	1.76E-05	8.78E-11
Co+3	1.49E-06	1.49E-06	1.49E-06					1.49E-06	1.49E-06	7.43E-12
Cr+3	5.79E+01	5.79E+01	5.79E+01					5.79E+01	5.79E+01	2.89E-04
Cs+	2.01E-01	2.01E-01	2.01E-01					2.01E-01	2.01E-01	1.00E-06
Cu+2	1.88E-01	1.88E-01	1.88E-01					1.88E-01	1.88E-01	9.42E-07
Fe+3	7.62E+02	7.62E+02	7.62E+02					7.62E+02	7.62E+02	3.81E-03
Hg+2	8.81E-02	8.81E-02	8.81E-02					8.81E-02	8.81E-02	4.41E-07
K+	2.96E+01	2.96E+01	2.96E+01					2.96E+01	2.96E+01	1.48E-04
La+3	2.30E+01	2.30E+01	2.29E+01					2.30E+01	2.29E+01	1.15E-04
Mg+2	8.25E+00	8.25E+00	8.25E+00					8.25E+00	8.25E+00	4.13E-05
Mn+4	1.80E+02	1.80E+02	1.80E+02					1.80E+02	1.80E+02	9.00E-04
Mo+6	3.21E-02	3.21E-02	3.21E-02					3.21E-02	3.21E-02	1.61E-07
Na+	5.84E+02	5.84E+02	5.84E+02					5.84E+02	5.84E+02	2.92E-03
Ni+3	2.06E+02	2.06E+02	2.06E+02					2.06E+02	2.06E+02	1.03E-03
Np+4	8.89E-02	8.89E-02	8.89E-02					8.89E-02	8.89E-02	4.44E-07
Pb+4	2.93E+01	2.93E+01	2.93E+01					2.93E+01	2.93E+01	1.47E-04
Pu+4	4.36E-01	4.36E-01	4.36E-01					4.36E-01	4.36E-01	2.18E-06
Rh+3	1.93E-01	1.93E-01	1.93E-01					1.93E-01	1.93E-01	9.63E-07
Se+6	3.31E+00	3.31E+00	3.31E+00					3.31E+00	3.31E+00	1.66E-05
Si+4	2.32E+02	2.32E+02	2.32E+02					2.32E+02	2.32E+02	1.16E-03
Sr+2	3.66E+01	3.66E+01	3.66E+01					3.66E+01	3.66E+01	1.83E-04
Th+4	2.79E+00	2.79E+00	2.79E+00					2.79E+00	2.79E+00	1.40E-05
Ti+4	1.55E-01	1.55E-01	1.55E-01					1.55E-01	1.55E-01	7.73E-07
UO2+2	1.54E+03	1.54E+03	1.54E+03					1.54E+03	1.54E+03	7.72E-03
Zn+2	5.06E-01	5.06E-01	5.06E-01					5.06E-01	5.06E-01	2.53E-06
Cl-	9.00E+00	9.03E+00	9.03E+00				2.72E-02	9.03E+00	9.03E+00	4.51E-05
CO3-2	1.09E+02	1.09E+02	1.09E+02					1.09E+02	1.09E+02	5.45E-04
F-	6.82E+01	6.83E+01	6.83E+01				1.52E-01	6.83E+01	6.83E+01	3.42E-04
I-	1.40E-03	1.40E-03	1.40E-03					1.40E-03	1.40E-03	6.98E-09
NO2-	6.18E+01	6.18E+01	6.18E+01					6.18E+01	6.18E+01	3.09E-04
NO3-	9.85E+02	9.85E+02	9.85E+02					9.85E+02	9.85E+02	4.93E-03
OH-	3.16E+03	3.16E+03	2.61E+03					3.16E+03	2.61E+03	1.30E-02
PO4-3	4.85E+02	4.85E+02	4.85E+02					4.85E+02	4.85E+02	2.43E-03
SO4-2	2.56E+01	2.56E+01	2.56E+01					2.56E+01	2.56E+01	1.28E-04
TcO4-	9.08E-01	9.08E-01	9.08E-01					9.08E-01	9.08E-01	4.54E-06
Cancrinite	2.71E+03	2.71E+03	2.71E+03					2.71E+03	2.71E+03	1.35E-02
H2O										
MnO2	2.83E-05	5.71E-01	5.71E-01				5.71E-01	5.71E-01	5.71E-01	2.86E-06
Organic Carbon	8.73E+01	8.73E+01	8.73E+01					8.73E+01	8.73E+01	4.36E-04
ZrO2:2H2O	1.20E+03	1.20E+03	1.20E+03					1.20E+03	1.20E+03	5.98E-03
Ag2O	1.58E-07	3.19E-03	3.19E-03				3.19E-03	3.19E-03	3.19E-03	1.60E-08
AlPO4	6.58E-05	1.33E+00	1.33E+00				1.33E+00	1.33E+00	1.33E+00	6.64E-06
Al2O3	1.97E-04	3.98E+00	3.98E+00				3.98E+00	3.98E+00	3.98E+00	1.99E-05
Am2O3	3.07E-09	6.20E-05	6.20E-05				6.20E-05	6.20E-05	6.20E-05	3.10E-10
As2O5	3.45E-10	6.96E-06	6.96E-06				6.96E-06	6.96E-06	6.96E-06	3.48E-11
B2O3	1.32E+01	1.66E+01	1.70E+03	1.69E+03			3.41E+00	1.66E+01	1.70E+03	8.51E-03
BaO	4.15E-07	8.38E-03	8.38E-03				8.38E-03	8.38E-03	8.38E-03	4.19E-08
BeO	8.47E-10	1.71E-05	1.71E-05				1.71E-05	1.71E-05	1.71E-05	8.55E-11
Bi2O3	2.78E-05	5.62E-01	5.62E-01				5.62E-01	5.62E-01	5.62E-01	2.81E-06
CaO	1.51E+00	1.92E+00	1.92E+00				4.09E-01	1.92E+00	1.92E+00	9.60E-06
CdO	7.48E-07	1.51E-02	1.51E-02				1.51E-02	1.51E-02	1.51E-02	7.56E-08
Ce2O3	2.73E-05	5.52E-01	5.52E-01				5.52E-01	5.52E-01	5.52E-01	2.76E-06
Cm2O3	1.91E-12	3.86E-08	3.86E-08				3.86E-08	3.86E-08	3.86E-08	1.93E-13
Co2O3	1.59E-12	3.20E-08	3.20E-08				3.20E-08	3.20E-08	3.20E-08	1.60E-13
Cr2O3	8.69E-06	1.76E-01	1.75E-01				1.75E-01	1.76E-01	1.75E-01	8.77E-07
Cs2O	2.09E-07	4.23E-03	4.23E-03				4.23E-03	4.23E-03	4.23E-03	2.11E-08
CuO	2.35E-08	4.74E-04	4.74E-04				4.74E-04	4.74E-04	4.74E-04	2.37E-09
Fe2O3	1.08E-04	2.19E+00	2.19E+00				2.19E+00	2.19E+00	2.19E+00	1.09E-05
FeO	1.03E-12	2.08E-08	2.08E-08				2.08E-08	2.08E-08	2.08E-08	1.04E-13
HgO										
K2O	4.44E-06	8.97E-02	8.97E-02				8.97E-02	8.97E-02	8.97E-02	4.49E-07
La2O3	2.67E-06	5.39E-02	5.39E-02				5.39E-02	5.39E-02	5.39E-02	2.70E-07
Li2O	3.11E+00	4.08E+00	4.86E+02	4.82E+02			9.73E-01	4.08E+00	4.86E+02	2.43E-03
MgO	1.51E+00	1.54E+00	1.54E+00				3.05E-02	1.54E+00	1.54E+00	7.71E-06
MnO	4.20E-14	8.48E-10	8.48E-10				8.48E-10	8.48E-10	8.48E-10	4.24E-15
MoO3	4.79E-09	9.68E-05	9.68E-05				9.68E-05	9.68E-05	9.68E-05	4.84E-10
Na2O	2.88E-04	5.81E+00	5.81E+00				5.81E+00	5.81E+00	5.81E+00	2.91E-05

STREAM NAME	311	312	313	314	315	316	317	318	319	320
SOLID COMPONENTS										
Chemicals Continued (MT)										
Ni2O3	2.88E-05	5.82E-01	5.82E-01				5.82E-01	5.82E-01	5.82E-01	2.91E-06
NpO2	1.00E-08	2.02E-04	2.02E-04				2.02E-04	2.02E-04	2.02E-04	1.01E-09
PbO2	3.36E-06	6.79E-02	6.79E-02				6.79E-02	6.79E-02	6.79E-02	3.40E-07
PuO2	4.91E-08	9.92E-04	9.92E-04				9.92E-04	9.92E-04	9.92E-04	4.96E-09
Rb2O	1.76E-13	3.55E-09	3.55E-09				3.55E-09	3.55E-09	3.55E-09	1.78E-14
Re2O7	9.43E-14	1.91E-09	1.91E-09				1.91E-09	1.91E-09	1.91E-09	9.52E-15
Rh2O3	2.36E-08	4.76E-04	4.76E-04				4.76E-04	4.76E-04	4.76E-04	2.38E-09
Ru2O3	9.82E-13	1.99E-08	1.98E-08				1.99E-08	1.99E-08	1.98E-08	9.92E-14
SeO3	5.28E-07	1.07E-02	1.07E-02				1.07E-02	1.07E-02	1.07E-02	5.34E-08
SiO2	4.37E+01	6.61E+01	9.74E+03	9.67E+03			2.24E+01	6.61E+01	9.74E+03	4.87E-02
SO3	1.80E-06	3.63E-02	3.63E-02				3.63E-02	3.63E-02	3.63E-02	1.81E-07
SrO	4.27E-06	8.63E-02	8.63E-02				8.63E-02	8.63E-02	8.63E-02	4.31E-07
Tc2O7	8.46E-08	1.71E-03	1.71E-03				1.71E-03	1.71E-03	1.71E-03	8.54E-09
TeO3	7.63E-13	1.54E-08	1.54E-08				1.54E-08	1.54E-08	1.54E-08	7.70E-14
ThO2	3.15E-07	6.36E-03	6.36E-03				6.36E-03	6.36E-03	6.36E-03	3.18E-08
TiO2	2.56E-08	5.17E-04	5.17E-04				5.17E-04	5.17E-04	5.17E-04	2.59E-09
UO3	1.62E-04	3.28E+00	3.28E+00				3.28E+00	3.28E+00	3.28E+00	1.64E-05
ZnO	6.25E-08	1.26E-03	1.26E-03				1.26E-03	1.26E-03	1.26E-03	6.32E-09
ZrO2	9.18E-05	1.85E+00	1.85E+00				1.85E+00	1.85E+00	1.85E+00	9.27E-06
Cement										
Cu										
CuSO4										
Dicyclopentadiene										
Flyash										
Oligomer										
Na Loaded Resin										
Sulfur										

STREAM NAME	321	322	323	324	325	326	327	328	329	330
LIQUID COMPONENTS										
Total Mass Flow (MT)	5.60E+03	6.78E+02	5.60E+03	5.21E+04	3.91E+04	1.31E+04			4.30E+02	5.60E+03
Volume (L)	5.60E+06	6.78E+05	5.60E+06	5.21E+07	3.91E+07	1.31E+07			4.30E+05	5.60E+06
Specific Gravity	1.00E+00	1.00E+00	1.00E+00	1.00E+00	1.00E+00	1.00E+00			1.00E+00	1.00E+00
Radionuclides (Ci)										
Am-241	2.41E-03	2.67E-04	2.41E-03							2.41E-03
C-14	1.01E-03	1.12E-04	1.01E-03							1.01E-03
Cs-137	1.40E+03	1.55E+02	1.40E+03							1.40E+03
Ba-137	1.33E+03	1.48E+02	1.33E+03							1.33E+03
Np-237	2.12E-06	2.35E-07	2.12E-06							2.12E-06
Pu-239	5.02E-04	5.57E-05	5.02E-04							5.02E-04
Pu-240	1.31E-04	1.46E-05	1.31E-04							1.31E-04
Pu-241	1.47E-03	1.63E-04	1.47E-03							1.47E-03
Sr-90	5.63E-01	6.26E-02	5.63E-01							5.63E-01
Y-90	5.63E-01	6.26E-02	5.63E-01							5.63E-01
Tc-99	4.13E-01	4.59E-02	4.13E-01	9.03E+03	2.71E-03	9.03E+03			2.71E-06	4.13E-01
Total Curies	2.73E+03	3.03E+02	2.73E+03	9.03E+03	2.71E-03	9.03E+03			2.71E-06	2.73E+03
Chemicals (MT)										
Ag+	9.74E-08	1.08E-08	9.74E-08							9.74E-08
Am+3	7.01E-10	7.79E-11	7.01E-10							7.01E-10
As+5	1.23E-11	1.37E-12	1.23E-11							1.23E-11
B+3	1.04E-08	1.16E-09	1.04E-08							1.04E-08
Ba+2	2.40E-07	2.67E-08	2.40E-07							2.40E-07
Be+2	7.38E-12	8.20E-13	7.38E-12							7.38E-12
Bi+3	3.59E-06	3.99E-07	3.59E-06							3.59E-06
Ca+2	5.02E-06	5.57E-07	5.02E-06							5.02E-06
Cd+2	2.32E-06	2.58E-07	2.32E-06							2.32E-06
Ce+3	7.19E-07	7.99E-08	7.19E-07							7.19E-07
Cm+3	2.89E-14	3.21E-15	2.89E-14							2.89E-14
Co+3	4.44E-10	4.94E-11	4.44E-10							4.44E-10
Cs+	8.05E-05	8.95E-06	8.05E-05							8.05E-05
Cu+2	3.01E-08	3.34E-09	3.01E-08							3.01E-08
Fe+2	3.63E-10	4.03E-11	3.63E-10							3.63E-10
Fe+3	1.05E-05	1.16E-06	1.05E-05							1.05E-05
H+	2.32E-05	2.58E-06	2.32E-05	5.17E-01	1.55E-07	5.17E-01			1.55E-10	2.32E-05
Hg+2	1.78E-08	1.97E-09	1.78E-08							1.78E-08
K+	3.40E-04	3.78E-05	3.40E-04							3.40E-04
La+3	7.26E-08	8.06E-09	7.26E-08							7.26E-08
Mg+2	4.44E-11	4.93E-12	4.44E-11							4.44E-11
Mn+2	1.47E-11	1.64E-12	1.47E-11							1.47E-11
Mn+4	3.29E-06	3.65E-07	3.29E-06							3.29E-06
Mo+6	2.20E-09	2.44E-10	2.20E-09							2.20E-09
Na+	4.99E-02	5.54E-03	4.99E-02							4.99E-02
Ni+3	2.50E-06	2.77E-07	2.50E-06							2.50E-06
Np+4	3.01E-09	3.34E-10	3.01E-09							3.01E-09
Pb+4	2.92E-06	3.25E-07	2.92E-06							2.92E-06
Pu+4	8.68E-09	9.65E-10	8.68E-09							8.68E-09
Rb+	7.30E-11	8.11E-12	7.30E-11							7.30E-11
Re+7	3.29E-11	3.65E-12	3.29E-11							3.29E-11
Rh+3	2.59E-10	2.87E-11	2.59E-10							2.59E-10
Ru+3	3.60E-10	4.00E-11	3.60E-10							3.60E-10
Se+6	4.10E-11	4.55E-12	4.10E-11							4.10E-11
Si+4	4.85E-06	5.38E-07	4.85E-06							4.85E-06
Sr+2	1.16E-07	1.29E-08	1.16E-07							1.16E-07
Te+6	2.51E-10	2.79E-11	2.51E-10							2.51E-10
UO2+2	3.22E-05	3.58E-06	3.22E-05							3.22E-05
Zn+2	2.37E-10	2.63E-11	2.37E-10							2.37E-10
Zr+4	7.38E-12	8.20E-13	7.38E-12							7.38E-12
Al(OH)4-	3.85E-03	4.28E-04	3.85E-03							3.85E-03
BO2-	4.76E-14	5.29E-15	4.76E-14							4.76E-14
Cl-	2.06E-04	2.29E-05	2.06E-04							2.06E-04
CO3-2										
Cr(OH)4-	2.09E-04	2.33E-05	2.09E-04							2.09E-04
F-	3.46E-04	3.84E-05	3.46E-04							3.46E-04
I-	2.75E-08	3.05E-09	2.75E-08							2.75E-08
NO2-	2.41E-03	2.68E-04	2.41E-03							2.41E-03
NO3-	9.84E-02	1.09E-02	9.84E-02	2.50E+01	1.50E-05	2.50E+01			1.50E-08	9.84E-02
OH-										
PO4-3	1.40E-03	1.56E-04	1.40E-03							1.40E-03
SO4-2	8.06E-04	8.95E-05	8.06E-04	4.25E+00	1.27E-06	4.25E+00			1.27E-09	8.06E-04
TcO4-	4.00E-05	4.45E-06	4.00E-05	8.75E-01	2.62E-07	8.75E-01			2.62E-10	4.00E-05
H2O	5.60E+03	6.22E+02	5.60E+03	5.21E+04	3.91E+04	1.30E+04			4.30E+02	5.60E+03
Organic Carbon	2.25E-03	2.50E-04	2.25E-03							2.25E-03
ZrO2:2H2O	2.29E-06	2.55E-07	2.29E-06							2.29E-06
H&	3.75E-02	3.75E-03		8.34E-02	2.50E-08	8.34E-02			2.50E-11	
TcO2										
Cl2										
CO										
CO2		4.39E+01								
F2										
H2										
I2										
N2										
N2O		8.54E-04								
NO		1.17E+01								
NO2										
O2										
SO2										
Dicyclopentadiene										
Glycolic Anion	1.32E+00	1.47E-01	1.32E+00							1.32E+00
H2S										
Glycolic Acid										
Kerosene										
NH3										
Oligomer										
Sulfur										

STREAM NAME	321	322	323	324	325	326	327	328	329	330
SOLID COMPONENTS										
Total Mass Flow (MT)	1.14E+00	1.27E-01	1.14E+00	4.75E+01		4.87E+01				1.14E+00
Radionuclides (Ci)										
Am-241	4.35E+00	4.83E-01	4.35E+00	1.89E+02		1.94E+02				4.35E+00
C-14	9.82E-02	1.09E-02	9.82E-02			1.09E-03				9.82E-02
Cs-137	1.38E+02	1.54E+01	1.38E+02	6.66E+04		6.82E+04				1.38E+02
Ba-137	1.32E+02	1.46E+01	1.32E+02	6.33E+04		6.48E+04				1.32E+02
Np-237	2.83E-03	3.14E-04	2.83E-03	1.23E-01		1.26E-01				2.83E-03
Pu-239	1.14E+00	1.27E-01	1.14E+00	4.95E+01		5.07E+01				1.14E+00
Pu-240	2.83E-01	3.15E-02	2.83E-01	1.23E+01		1.26E+01				2.83E-01
Pu-241	3.19E+00	3.54E-01	3.19E+00	1.38E+02		1.42E+02				3.19E+00
Sr-90	2.30E+03	2.55E+02	2.30E+03	9.97E+04		1.02E+05				2.30E+03
Y-90	2.30E+03	2.55E+02	2.30E+03	9.97E+04		1.02E+05				2.30E+03
Tc-99	4.23E-01	4.69E-02	4.23E-01	1.81E+01		1.86E+01				4.23E-01
Total Curies	4.88E+03	5.42E+02	4.88E+03	3.30E+05		3.38E+05				4.88E+03
Chemicals (MT)										
Ag+	6.66E-05	7.40E-06	6.66E-05			7.40E-07				6.66E-05
Al+3	3.35E-02	3.73E-03	3.35E-02			3.73E-04				3.35E-02
Am+3	1.27E-06	1.41E-07	1.27E-06			1.41E-08				1.27E-06
As+5	1.02E-07	1.13E-08	1.02E-07			1.13E-09				1.02E-07
Ba+2	1.68E-04	1.87E-05	1.68E-04			1.87E-06				1.68E-04
Be+2	1.38E-07	1.54E-08	1.38E-07			1.54E-09				1.38E-07
Bi+3	1.13E-02	1.26E-03	1.13E-02			1.26E-04				1.13E-02
Ca+2	6.52E-03	7.24E-04	6.52E-03			7.24E-05				6.52E-03
Cd+2	2.95E-04	3.28E-05	2.95E-04			3.28E-06				2.95E-04
Ce+3	1.06E-02	1.18E-03	1.06E-02			1.18E-04				1.06E-02
Cm+3	7.90E-10	8.78E-11	7.90E-10			8.78E-12				7.90E-10
Co+3	6.69E-11	7.43E-12	6.69E-11			7.43E-13				6.69E-11
Cr+3	2.61E-03	2.89E-04	2.61E-03			2.89E-05				2.61E-03
Cs+	9.04E-06	1.00E-06	9.04E-06			1.00E-07				9.04E-06
Cu+2	8.48E-06	9.42E-07	8.48E-06			9.42E-08				8.48E-06
Fe+3	3.43E-02	3.81E-03	3.43E-02			3.81E-04				3.43E-02
Hg+2	3.97E-06	4.41E-07	3.97E-06			4.41E-08				3.97E-06
K+	1.33E-03	1.48E-04	1.33E-03			1.48E-05				1.33E-03
La+3	1.03E-03	1.15E-04	1.03E-03			1.15E-05				1.03E-03
Mg+2	3.71E-04	4.13E-05	3.71E-04			4.13E-06				3.71E-04
Mn+4	8.10E-03	9.00E-04	8.10E-03			9.00E-05				8.10E-03
Mo+6	1.45E-06	1.61E-07	1.45E-06			1.61E-08				1.45E-06
Na+	2.63E-02	2.92E-03	2.63E-02			2.92E-04				2.63E-02
Ni+3	9.28E-03	1.03E-03	9.28E-03			1.03E-04				9.28E-03
Np+4	4.00E-06	4.44E-07	4.00E-06			4.44E-08				4.00E-06
Pb+4	1.32E-03	1.47E-04	1.32E-03			1.47E-05				1.32E-03
Pu+4	1.96E-05	2.18E-06	1.96E-05			2.18E-07				1.96E-05
Rh+3	8.67E-06	9.63E-07	8.67E-06			9.63E-08				8.67E-06
Se+6	1.49E-04	1.66E-05	1.49E-04			1.66E-06				1.49E-04
Si+4	1.04E-02	1.16E-03	1.04E-02			1.16E-04				1.04E-02
Sr+2	1.65E-03	1.83E-04	1.65E-03			1.83E-05				1.65E-03
Th+4	1.26E-04	1.40E-05	1.26E-04			1.40E-06				1.26E-04
Ti+4	6.96E-06	7.73E-07	6.96E-06			7.73E-08				6.96E-06
UO2+2	6.95E-02	7.72E-03	6.95E-02			7.72E-04				6.95E-02
Zr+2	2.28E-05	2.53E-06	2.28E-05			2.53E-07				2.28E-05
Cl-	4.06E-04	4.51E-05	4.06E-04	2.65E-02		2.72E-02				4.06E-04
CO3-2	4.90E-03	5.45E-04	4.90E-03			5.45E-05				4.90E-03
F-	3.08E-03	3.42E-04	3.08E-03	1.48E-01		1.52E-01				3.08E-03
I-	6.28E-08	6.98E-09	6.28E-08			6.98E-10				6.28E-08
NO2-	2.78E-03	3.09E-04	2.78E-03			3.09E-05				2.78E-03
NO3-	4.43E-02	4.93E-03	4.43E-02			4.93E-04				4.43E-02
OH-	1.17E-01	1.30E-02	1.17E-01			1.30E-03				1.17E-01
PO4-3	2.18E-02	2.43E-03	2.18E-02			2.43E-04				2.18E-02
SO4-2	1.15E-03	1.28E-04	1.15E-03			1.28E-05				1.15E-03
TcO4-	4.08E-05	4.54E-06	4.08E-05			4.54E-07				4.08E-05
Cancrinite	1.22E-01	1.35E-02	1.22E-01			1.35E-03				1.22E-01
H2O										
MnO2	2.57E-05	2.86E-06	2.57E-05	5.57E-01		5.71E-01				2.57E-05
Organic Carbon	3.93E-03	4.36E-04	3.93E-03			4.36E-05				3.93E-03
ZrO2:2H2O	5.38E-02	5.98E-03	5.38E-02			5.98E-04				5.38E-02
Ag2O	1.44E-07	1.60E-08	1.44E-07	3.12E-03		3.19E-03				1.44E-07
AlPO4	5.98E-05	6.64E-06	5.98E-05	1.30E+00		1.33E+00				5.98E-05
Al2O3	1.79E-04	1.99E-05	1.79E-04	3.89E+00		3.98E+00				1.79E-04
Am2O3	2.79E-09	3.10E-10	2.79E-09	6.05E-05		6.20E-05				2.79E-09
As2O5	3.13E-10	3.48E-11	3.13E-10	6.79E-06		6.96E-06				3.13E-10
B2O3	7.66E-02	8.51E-03	7.66E-02	3.32E+00		3.41E+00				7.66E-02
BaO	3.77E-07	4.19E-08	3.77E-07	8.18E-03		8.38E-03				3.77E-07
BeO	7.70E-10	8.55E-11	7.70E-10	1.67E-05		1.71E-05				7.70E-10
Bi2O3	2.53E-05	2.81E-06	2.53E-05	5.49E-01		5.62E-01				2.53E-05
CaO	8.64E-05	9.60E-06	8.64E-05	3.99E-01		4.09E-01				8.64E-05
CdO	6.80E-07	7.56E-08	6.80E-07	1.48E-02		1.51E-02				6.80E-07
Ce2O3	2.48E-05	2.76E-06	2.48E-05	5.39E-01		5.52E-01				2.48E-05
Cm2O3	1.74E-12	1.93E-13	1.74E-12	3.77E-08		3.86E-08				1.74E-12
Co2O3	1.44E-12	1.60E-13	1.44E-12	3.13E-08		3.20E-08				1.44E-12
Cr2O3	7.90E-06	8.77E-07	7.90E-06	1.71E-01		1.75E-01				7.90E-06
Cs2O	1.90E-07	2.11E-08	1.90E-07	4.13E-03		4.23E-03				1.90E-07
CuO	2.13E-08	2.37E-09	2.13E-08	4.63E-04		4.74E-04				2.13E-08
Fe2O3	9.83E-05	1.09E-05	9.83E-05	2.13E+00		2.19E+00				9.83E-05
FeO	9.35E-13	1.04E-13	9.35E-13	2.03E-08		2.08E-08				9.35E-13
HgO										
K2O	4.04E-06	4.49E-07	4.04E-06	8.76E-02		8.97E-02				4.04E-06
La2O3	2.43E-06	2.70E-07	2.43E-06	5.26E-02		5.39E-02				2.43E-06
Li2O	2.19E-02	2.43E-03	2.19E-02	9.49E-01		9.73E-01				2.19E-02
MgO	6.94E-05	7.71E-06	6.94E-05	2.97E-02		3.05E-02				6.94E-05
MnO	3.81E-14	4.24E-15	3.81E-14	8.27E-10		8.48E-10				3.81E-14
MoO3	4.36E-09	4.84E-10	4.36E-09	9.44E-05		9.68E-05				4.36E-09
Na2O	2.62E-04	2.91E-05	2.62E-04	5.67E+00		5.81E+00				2.62E-04

STREAM NAME	321	322	323	324	325	326	327	328	329	330
SOLID COMPONENTS										
Chemicals Continued (MT)										
Ni2O3	2.62E-05	2.91E-06	2.62E-05	5.68E-01		5.82E-01				2.62E-05
NpO2	9.10E-09	1.01E-09	9.10E-09	1.97E-04		2.02E-04				9.10E-09
HfO2	3.06E-06	3.40E-07	3.06E-06	6.63E-02		6.79E-02				3.06E-06
RuO2	4.46E-08	4.96E-09	4.46E-08	9.68E-04		9.92E-04				4.46E-08
Rb2O	1.60E-13	1.78E-14	1.60E-13	3.47E-09		3.55E-09				1.60E-13
Re2O7	8.57E-14	9.52E-15	8.57E-14	1.86E-09		1.91E-09				8.57E-14
Rh2O3	2.14E-08	2.38E-09	2.14E-08	4.65E-04		4.76E-04				2.14E-08
Ru2O3	8.93E-13	9.92E-14	8.93E-13	1.94E-08		1.98E-08				8.93E-13
SeO3	4.80E-07	5.34E-08	4.80E-07	1.04E-02		1.07E-02				4.80E-07
SiO2	4.38E-01	4.87E-02	4.38E-01	2.18E+01		2.24E+01				4.38E-01
SO3	1.63E-06	1.81E-07	1.63E-06	3.54E-02		3.63E-02				1.63E-06
SrO	3.88E-06	4.31E-07	3.88E-06	8.42E-02		8.63E-02				3.88E-06
Tc2O7	7.69E-08	8.54E-09	7.69E-08	1.67E-03		1.71E-03				7.69E-08
TeO3	6.93E-13	7.70E-14	6.93E-13	1.50E-08		1.54E-08				6.93E-13
ThO2	2.86E-07	3.18E-08	2.86E-07	6.21E-03		6.36E-03				2.86E-07
TiO2	2.33E-08	2.59E-09	2.33E-08	5.05E-04		5.17E-04				2.33E-08
UO3	1.48E-04	1.64E-05	1.48E-04	3.20E+00		3.28E+00				1.48E-04
ZnO	5.68E-08	6.32E-09	5.68E-08	1.23E-03		1.26E-03				5.68E-08
ZrO2	8.34E-05	9.27E-06	8.34E-05	1.81E+00		1.85E+00				8.34E-05
Cement										
Cu										
CuSO4										
Dicyclopentadiene										
Flyash										
Oligomer										
Na Loaded Resin										
Sulfur										

STREAM NAME	331	332	333	334	335	336	337	338	340	344
LIQUID COMPONENTS										
Total Mass Flow (MT)				1.97E+03	7.57E+03	7.57E+03	3.87E+04		2.74E+02	
Volume (L)				1.97E+06	7.57E+06	7.57E+06	3.87E+07		2.74E+05	
Specific Gravity				1.00E+00	1.00E+00	1.00E+00	1.00E+00		1.00E+00	
Radionuclides (Ci)										
Am-241				2.41E-04	2.65E-03	2.65E-03			2.67E-05	
C-14				1.01E-04	1.11E-03	1.11E-03			1.12E-05	
Cs-137				1.40E+02	1.54E+03	1.54E+03			1.55E+01	
Ba-137				1.33E+02	1.46E+03	1.46E+03			1.48E+01	
Np-237				2.12E-07	2.33E-06	2.33E-06			2.35E-08	
Pu-239				5.02E-05	5.52E-04	5.52E-04			5.57E-06	
Pu-240				1.31E-05	1.44E-04	1.44E-04			1.46E-06	
Pu-241				1.47E-04	1.62E-03	1.62E-03			1.63E-05	
Sr-90				5.63E-02	6.20E-01	6.20E-01			6.26E-03	
Y-90				5.63E-02	6.20E-01	6.20E-01			6.26E-03	
Tc-99				4.13E-02	4.55E-01	4.55E-01	2.71E-03		4.59E-03	
Total Curies				2.73E+02	3.00E+03	3.00E+03	2.71E-03		3.03E+01	
Chemicals (MT)										
Ag+				9.74E-09	1.07E-07	1.07E-07			1.08E-09	
Am+3				7.01E-11	7.71E-10	7.71E-10			7.79E-12	
As+5				1.23E-12	1.36E-11	1.36E-11			1.37E-13	
B+3				1.04E-09	1.15E-08	1.15E-08			1.16E-10	
Ba+2				2.40E-08	2.64E-07	2.64E-07			2.67E-09	
Be+2				7.38E-13	8.12E-12	8.12E-12			8.20E-14	
Bi+3				3.59E-07	3.95E-06	3.95E-06			3.99E-08	
Ca+2				5.02E-07	5.52E-06	5.52E-06			5.57E-08	
Cd+2				2.32E-07	2.55E-06	2.55E-06			2.58E-08	
Ce+3				7.19E-08	7.91E-07	7.91E-07			7.99E-09	
Cm+3				2.89E-15	3.18E-14	3.18E-14			3.21E-16	
Co+3				4.44E-11	4.89E-10	4.89E-10			4.94E-12	
Cs+				8.05E-06	8.86E-05	8.86E-05			8.95E-07	
Cu+2				3.01E-09	3.31E-08	3.31E-08			3.34E-10	
Fe+2				3.63E-11	3.99E-10	3.99E-10			4.03E-12	
Fe+3				1.05E-06	1.15E-05	1.15E-05			1.16E-07	
H+				2.32E-06	2.56E-05	2.56E-05	1.55E-07		2.58E-07	
Hg+2				1.78E-09	1.95E-08	1.95E-08			1.97E-10	
K+				3.40E-05	3.74E-04	3.74E-04			3.78E-06	
La+3				7.26E-09	7.98E-08	7.98E-08			8.06E-10	
Mg+2				4.44E-12	4.88E-11	4.88E-11			4.93E-13	
Mn+2				1.47E-12	1.62E-11	1.62E-11			1.64E-13	
Mn+4				3.29E-07	3.61E-06	3.61E-06			3.65E-08	
Mo+6				2.20E-10	2.42E-09	2.42E-09			2.44E-11	
Na+				4.99E-03	5.49E-02	5.49E-02			5.54E-04	
Ni+3				2.50E-07	2.75E-06	2.75E-06			2.77E-08	
Np+4				3.01E-10	3.31E-09	3.31E-09			3.34E-11	
Pb+4				2.92E-07	3.21E-06	3.21E-06			3.25E-08	
Pu+4				8.68E-10	9.55E-09	9.55E-09			9.65E-11	
Rb+				7.30E-12	8.03E-11	8.03E-11			8.11E-13	
Re+7				3.29E-12	3.62E-11	3.62E-11			3.65E-13	
Rh+3				2.59E-11	2.84E-10	2.84E-10			2.87E-12	
Ru+3				3.60E-11	3.96E-10	3.96E-10			4.00E-12	
Se+6				4.10E-12	4.51E-11	4.51E-11			4.55E-13	
Si+4				4.85E-07	5.33E-06	5.33E-06			5.39E-08	
Sr+2				1.16E-08	1.27E-07	1.27E-07			1.29E-09	
Te+6				2.52E-11	2.77E-10	2.77E-10			2.79E-12	
UO2+2				3.22E-06	3.55E-05	3.55E-05			3.58E-07	
Zn+2				2.37E-11	2.60E-10	2.60E-10			2.63E-12	
Zr+4				7.38E-13	8.12E-12	8.12E-12			8.20E-14	
Al(OH)4-				3.85E-04	4.24E-03	4.24E-03			4.28E-05	
BO2-				4.76E-15	5.24E-14	5.24E-14			5.29E-16	
Cl-				2.06E-05	2.27E-04	2.27E-04			2.29E-06	
CO3-2				6.48E-09	6.48E-09	6.48E-09			7.20E-10	
Cr(OH)4-				2.09E-05	2.30E-04	2.30E-04			2.33E-06	
F-				3.46E-05	3.80E-04	3.80E-04			3.84E-06	
I-				2.75E-09	3.02E-08	3.02E-08			3.05E-10	
NO2-				2.41E-04	2.65E-03	2.65E-03			2.68E-05	
NO3-				9.84E-03	1.08E-01	1.08E-01	1.50E-05		1.09E-03	
OH-				1.07E-07	1.07E-07	1.07E-07			1.19E-08	
PO4-3				1.40E-04	1.54E-03	1.54E-03			1.56E-05	
SO4-2				8.06E-05	8.86E-04	8.86E-04	1.27E-06		8.95E-06	
TcO4-				4.00E-06	4.40E-05	4.40E-05	2.62E-07		4.45E-07	
H2O				1.97E+03	7.57E+03	7.57E+03	3.87E+04		2.19E+02	
Organic Carbon				2.25E-04	2.48E-03	2.48E-03			2.50E-05	
ZrO2:2H2O				2.29E-07	2.52E-06	2.52E-06			2.55E-08	
Hg							2.50E-08		7.13E-04	
TcO2										
Cl2										
CO										
CO2									4.39E+01	
F2										
H2										
I2										
N2										
N2O									8.54E-04	
NO									1.17E+01	
NO2										
O2										
SO2										
Dicyclopentadiene										
Glycolic Anion				1.32E-01	1.45E+00	1.45E+00			1.47E-02	
H2S										
Glycolic Acid										
Kerosene										
NH3										
Oligomer										
Sulfur										

STREAM NAME	331	332	333	334	335	336	337	338	340	344
SOLID COMPONENTS										
Total Mass Flow (MT)				1.14E-01	1.26E+00	1.26E+00			6.35E-06	2.43E+04
Radionuclides (Ci)										
Am-241				4.35E-01	4.78E+00	4.78E+00			2.42E-05	9.66E+04
C-14				9.82E-03	1.08E-01	1.08E-01			5.46E-07	
Cs-137				1.38E+01	1.52E+02	1.52E+02			7.69E-04	3.41E+07
Ba-137				1.32E+01	1.45E+02	1.45E+02			7.31E-04	3.24E+07
Np-237				2.83E-04	3.11E-03	3.11E-03			1.57E-08	6.27E+01
Pu-239				1.14E-01	1.26E+00	1.26E+00			6.34E-06	2.53E+04
Pu-240				2.83E-02	3.12E-01	3.12E-01			1.57E-06	6.29E+03
Pu-241				3.19E-01	3.51E+00	3.51E+00			1.77E-05	7.07E+04
Sr-90				2.30E+02	2.53E+03	2.53E+03			1.28E-02	5.10E+07
Y-90				2.30E+02	2.53E+03	2.53E+03			1.28E-02	5.10E+07
Tc-99				4.23E-02	4.65E-01	4.65E-01			2.35E-06	9.28E+03
Total Curies				4.88E+02	5.36E+03	5.36E+03			2.71E-02	1.69E+08
Chemicals (MT)										
Ag+				6.66E-06	7.33E-05	7.33E-05			3.70E-10	
Al+3				3.35E-03	3.69E-02	3.69E-02			1.86E-07	
Am+3				1.27E-07	1.39E-06	1.39E-06			7.03E-12	
As+5				1.02E-08	1.12E-07	1.12E-07			5.66E-13	
Ba+2				1.68E-05	1.85E-04	1.85E-04			9.35E-10	
Be+2				1.38E-08	1.52E-07	1.52E-07			7.69E-13	
Bi+3				1.13E-03	1.25E-02	1.25E-02			6.29E-08	
Ca+2				6.52E-04	7.17E-03	7.17E-03			3.62E-08	
Cd+2				2.95E-05	3.24E-04	3.24E-04			1.64E-09	
Ce+3				1.06E-03	1.16E-02	1.16E-02			5.88E-08	
Cm+3				7.90E-11	8.69E-10	8.69E-10			4.39E-15	
Co+3				6.69E-12	7.36E-11	7.36E-11			3.72E-16	
Cr+3				2.61E-04	2.87E-03	2.87E-03			1.45E-08	
Cs+				9.04E-07	9.94E-06	9.94E-06			5.02E-11	
Cu+2				8.48E-07	9.32E-06	9.32E-06			4.71E-11	
Fe+3				3.43E-03	3.77E-02	3.77E-02			1.91E-07	
Hg+2				3.97E-07	4.36E-06	4.36E-06			2.20E-11	
K+				1.33E-04	1.47E-03	1.47E-03			7.40E-09	
La+3				1.03E-04	1.14E-03	1.14E-03			5.74E-09	
Mg+2				3.71E-05	4.08E-04	4.08E-04			2.06E-09	
Mn+4				8.10E-04	8.91E-03	8.91E-03			4.50E-08	
Mo+6				1.45E-07	1.59E-06	1.59E-06			8.04E-12	
Na+				2.63E-03	2.89E-02	2.89E-02			1.46E-07	
Ni+3				9.28E-04	1.02E-02	1.02E-02			5.16E-08	
Np+4				4.00E-07	4.40E-06	4.40E-06			2.22E-11	
Pb+4				1.32E-04	1.45E-03	1.45E-03			7.32E-09	
Pu+4				1.96E-06	2.16E-05	2.16E-05			1.09E-10	
Rh+3				8.67E-07	9.54E-06	9.54E-06			4.82E-11	
Se+6				1.49E-05	1.64E-04	1.64E-04			8.28E-10	
Si+4				1.04E-03	1.15E-02	1.15E-02			5.79E-08	
Sr+2				1.65E-04	1.81E-03	1.81E-03			9.14E-09	
Th+4				1.26E-05	1.38E-04	1.38E-04			6.98E-10	
Ti+4				6.96E-07	7.66E-06	7.66E-06			3.87E-11	
UO2+2				6.95E-03	7.64E-02	7.64E-02			3.86E-07	
Zr+2				2.28E-06	2.51E-05	2.51E-05			1.27E-10	
Cl-				4.06E-05	4.47E-04	4.47E-04			2.26E-09	1.36E+01
CO3-2				4.90E-04	5.39E-03	5.39E-03			2.72E-08	
F-				3.08E-04	3.38E-03	3.38E-03			1.71E-08	7.58E+01
I-				6.28E-09	6.91E-08	6.91E-08			3.49E-13	
NO2-				2.78E-04	3.06E-03	3.06E-03			1.54E-08	
NO3-				4.43E-03	4.88E-02	4.88E-02			2.46E-07	
OH-				1.17E-02	1.29E-01	1.29E-01			6.52E-07	
PO4-3				2.18E-03	2.40E-02	2.40E-02			1.21E-07	
SO4-2				1.15E-04	1.27E-03	1.27E-03			6.39E-09	
TcO4-				4.08E-06	4.49E-05	4.49E-05			2.27E-10	
Cancrinite				1.22E-02	1.34E-01	1.34E-01			6.76E-07	
H2O										
MnO2				2.57E-06	2.83E-05	2.83E-05			1.43E-10	2.85E+02
Organic Carbon				3.93E-04	4.32E-03	4.32E-03			2.18E-08	
ZrO2:2H2O				5.38E-03	5.92E-02	5.92E-02			2.99E-07	
Ag2O				1.44E-08	1.58E-07	1.58E-07			7.98E-13	1.59E+00
AlPO4				5.98E-06	6.58E-05	6.58E-05			3.32E-10	6.63E+02
Al2O3				1.79E-05	1.97E-04	1.97E-04			9.95E-10	1.99E+03
Am2O3				2.79E-10	3.07E-09	3.07E-09			1.55E-14	3.09E-02
As2O5				3.13E-11	3.45E-10	3.45E-10			1.74E-15	3.47E-03
B2O3				7.66E-03	8.43E-02	8.43E-02			4.26E-07	1.70E+03
BaO				3.77E-08	4.15E-07	4.15E-07			2.10E-12	4.18E+00
BeO				7.70E-11	8.47E-10	8.47E-10			4.28E-15	8.54E-03
Bi2O3				2.53E-06	2.78E-05	2.78E-05			1.41E-10	2.81E+02
CaO				8.64E-06	9.51E-05	9.51E-05			4.80E-10	2.04E+02
CdO				6.80E-08	7.48E-07	7.48E-07			3.78E-12	7.54E+00
Ce2O3				2.48E-06	2.73E-05	2.73E-05			1.38E-10	2.75E+02
Cm2O3				1.74E-13	1.91E-12	1.91E-12			9.65E-18	1.93E-05
Co2O3				1.44E-13	1.59E-12	1.59E-12			8.01E-18	1.60E-05
Cr2O3				7.90E-07	8.69E-06	8.69E-06			4.39E-11	8.76E+01
Cs2O				1.90E-08	2.09E-07	2.09E-07			1.06E-12	2.11E+00
CuO				2.13E-09	2.35E-08	2.35E-08			1.19E-13	2.37E-01
Fe2O3				9.83E-06	1.08E-04	1.08E-04			5.46E-10	1.09E+03
FeO				9.35E-14	1.03E-12	1.03E-12			5.19E-18	1.04E-05
HgO										
K2O				4.04E-07	4.44E-06	4.44E-06			2.24E-11	4.48E+01
La2O3				2.43E-07	2.67E-06	2.67E-06			1.35E-11	2.69E+01
Li2O				2.19E-03	2.41E-02	2.41E-02			1.22E-07	4.85E+02
MgO				6.94E-06	7.63E-05	7.63E-05			3.85E-10	1.52E+01
MnO				3.81E-15	4.20E-14	4.20E-14			2.12E-19	4.23E-07
MoO3				4.36E-10	4.79E-09	4.79E-09			2.42E-14	4.83E-02
Na2O				2.62E-05	2.88E-04	2.88E-04			1.45E-09	2.90E+03

STREAM NAME	331	332	333	334	335	336	337	338	340	344
SOLID COMPONENTS										
Chemicals Continued (MT)										
Nd_2O_3				2.62E-06	2.88E-05	2.88E-05			1.46E-10	2.91E+02
NpO_2				9.10E-10	1.00E-08	1.00E-08			5.06E-14	1.01E-01
PbO_2				3.06E-07	3.36E-06	3.36E-06			1.70E-11	3.39E+01
PuO_2				4.46E-09	4.91E-08	4.91E-08			2.48E-13	4.95E-01
Rb_2O				1.60E-14	1.76E-13	1.76E-13			8.89E-19	1.77E-06
Re_2O_7				8.57E-15	9.43E-14	9.43E-14			4.76E-19	9.51E-07
Rh_2O_3				2.14E-09	2.36E-08	2.36E-08			1.19E-13	2.38E-01
Ru_2O_3				8.93E-14	9.82E-13	9.82E-13			4.96E-18	9.90E-06
SeO_3				4.80E-08	5.28E-07	5.28E-07			2.67E-12	5.33E+00
SiO_2				4.38E-02	4.82E-01	4.82E-01			2.43E-06	1.12E+04
SO_3				1.63E-07	1.80E-06	1.80E-06			9.07E-12	1.81E+01
SrO				3.88E-07	4.27E-06	4.27E-06			2.16E-11	4.30E+01
Tc_2O_7				7.69E-09	8.46E-08	8.46E-08			4.27E-13	8.55E-01
TeO_3				6.93E-14	7.63E-13	7.63E-13			3.85E-18	7.69E-06
ThO_2				2.86E-08	3.15E-07	3.15E-07			1.59E-12	3.18E+00
TiO_2				2.33E-09	2.56E-08	2.56E-08			1.29E-13	2.58E-01
UO_3				1.48E-05	1.62E-04	1.62E-04			8.20E-10	1.64E+03
ZnO				5.68E-09	6.25E-08	6.25E-08			3.16E-13	6.30E-01
ZrO_2				8.34E-06	9.18E-05	9.18E-05			4.63E-10	9.25E+02
Cement										
C_1										
$CuSO_4$										
Dicyclopentadiene										
Flyash										
Oligomer										
Na Loaded Resin										
Sulfur										

STREAM NAME	346	347	348	349	351	352	353	400	401	402
LIQUID COMPONENTS										
Total Mass Flow (MT)			6.28E+03	7.13E-02	1.57E+03		3.38E-02	1.78E+06	1.24E+06	1.36E+04
Volume (L)			6.28E+06	7.13E+01	1.57E+06		3.38E+01	1.61E+09	1.24E+09	1.36E+07
Specific Gravity			1.00E+00	1.00E+00	1.00E+00		1.00E+00	1.11E+00	1.00E+00	1.00E+00
Radionuclides (Ci)										
Am-241			2.67E-03		1.84E-08			7.86E+03	1.78E-03	1.78E-06
C-14			1.12E-03		7.70E-09			3.29E+03	7.46E-04	7.46E-07
Cs-137			1.55E+03		7.43E-05			1.09E+06	2.48E-01	2.48E-04
Ba-137			1.48E+03		7.06E-05			1.04E+06	2.35E-01	2.35E-04
Np-237			2.35E-06		1.62E-11			6.92E+00	1.57E-06	1.57E-09
Pu-239			5.57E-04		3.83E-09			1.64E+03	3.71E-04	3.71E-07
Pu-240			1.46E-04		1.00E-09			4.28E+02	9.71E-05	9.71E-08
Pu-241			1.63E-03		1.12E-08			4.80E+03	1.09E-03	1.09E-06
Sr-90			6.26E-01		4.30E-06			1.84E+06	4.17E-01	4.17E-04
Y-90			6.26E-01		4.30E-06			1.84E+06	4.17E-01	4.17E-04
Tc-99			4.59E-01		2.76E-06			4.42E+04	1.00E-02	1.00E-05
Total Curies			3.03E+03		1.56E-04			5.87E+06	1.33E+00	1.33E-03
Chemicals (MT)										
Ag+			1.08E-07		7.43E-13			3.18E-01	7.21E-08	7.21E-11
Am+3			7.79E-10		5.35E-15			2.29E-03	5.19E-10	5.19E-13
As+5			1.37E-11		9.41E-17			4.03E-05	9.12E-12	9.12E-15
B+3			1.16E-08		7.96E-14			3.41E-02	7.72E-09	7.72E-12
Ba+2			2.67E-07		1.84E-12			7.85E-01	1.78E-07	1.78E-10
Be+2			8.20E-12		5.64E-17			2.41E-05	5.46E-12	5.46E-15
Bi+3			3.99E-06		2.74E-11			1.17E+01	2.66E-06	2.66E-09
Ca+2			5.57E-06		3.83E-11			2.69E+03	6.09E-04	6.09E-07
Cd+2			2.58E-06		1.77E-11			1.14E+01	2.57E-06	2.57E-09
Ce+3			7.99E-07		5.49E-12			2.35E+00	5.32E-07	5.32E-10
Cm+3			3.21E-14		2.21E-19			9.45E-08	2.14E-14	2.14E-17
Co+3			4.94E-10		3.39E-15			1.45E-03	3.29E-10	3.29E-13
Cs+			8.95E-05		4.28E-12			6.30E-02	1.43E-08	1.43E-11
Cu+2			3.34E-08		2.30E-13			9.83E-02	2.23E-08	2.23E-11
Fe+2			4.03E-10		2.77E-15			1.18E-03	2.68E-10	2.68E-13
Fe+3			1.16E-05		7.98E-11			3.42E+01	7.74E-06	7.74E-09
H+			2.58E-05		1.55E-10					
Hg+2			1.97E-08		1.36E-13			5.80E-02	1.31E-08	1.31E-11
K+			3.78E-04		1.64E-09			7.07E+02	1.60E-04	1.60E-07
La+3			8.06E-08		5.54E-13			2.37E-01	5.37E-08	5.37E-11
Mg+2			4.93E-11		3.39E-16			1.45E-04	3.29E-11	3.29E-14
Mn+2			1.64E-11		1.13E-16			4.81E-05	1.09E-11	1.09E-14
Mn+4			3.65E-06		2.51E-11			1.07E+01	2.43E-06	2.43E-09
Mo+6			2.44E-09		1.68E-14			7.57E-03	1.71E-09	1.71E-12
Na+			5.54E-02		4.66E-07			8.52E+04	5.29E-02	5.29E-05
Ni+3			2.77E-06		1.91E-11			8.15E+00	1.85E-06	1.85E-09
Np+4			3.34E-09		2.29E-14			9.81E-03	2.22E-09	2.22E-12
Pb+4			3.25E-06		2.23E-11			1.43E+01	3.24E-06	3.24E-09
Pu+4			9.65E-09		6.63E-14			2.84E-02	6.43E-09	6.43E-12
Rb+			8.11E-11		5.57E-16			2.38E-04	5.40E-11	5.40E-14
Re+7			3.65E-11		2.51E-16			1.07E-04	2.43E-11	2.43E-14
Rh+3			2.87E-10		1.97E-15			8.44E-04	1.91E-10	1.91E-13
Ru+3			4.00E-10		2.75E-15			1.76E-03	3.99E-10	3.99E-13
Se+6			4.55E-11		3.13E-16			2.99E-04	6.78E-11	6.78E-14
Si+4			5.38E-06		3.70E-11			1.58E+01	3.59E-06	3.59E-09
Sr+2			1.29E-07		8.83E-13			3.78E-01	8.56E-08	8.56E-11
Te+6			2.79E-10		1.92E-15			1.23E-03	2.79E-10	2.79E-13
UO2+2			3.58E-05		2.46E-10			1.05E+02	2.39E-05	2.39E-08
Zn+2			2.63E-10		1.81E-15			7.72E-04	1.75E-10	1.75E-13
Zr+4			8.20E-12		5.64E-17			2.41E-05	5.46E-12	5.46E-15
Al(OH)4-			4.28E-03		2.94E-08			1.24E+04	2.82E-03	2.82E-06
BO2-			5.29E-14		3.63E-19			4.51E-02	1.02E-08	1.02E-11
Cl-			2.29E-04		3.15E-09			2.98E+03	1.35E-03	1.35E-06
CO3-2					7.20E-09					
Cr(OH)4-			2.33E-04		1.60E-09			6.77E+02	1.53E-04	1.53E-07
F-			3.84E-04		2.64E-09			2.87E+03	6.51E-04	6.51E-07
I-			3.05E-08		2.10E-13			2.37E+00	5.36E-07	5.36E-10
NO2-			2.68E-03		3.68E-08			9.40E+03	2.13E-03	2.13E-06
NO3-			1.09E-01		5.09E-07			1.31E+05	5.96E-02	5.96E-05
OH-					1.19E-07			1.91E+04	4.33E-03	4.33E-06
PO4-3			1.56E-03		1.07E-08			5.67E+03	1.29E-03	1.29E-06
SO4-2			8.95E-04		5.97E-09			2.01E+03	4.55E-04	4.55E-07
TcO4-			4.45E-05		2.68E-10			4.28E+00	9.69E-07	9.69E-10
H2O			6.22E+03		1.57E+03			1.51E+06	1.24E+06	1.36E+04
Organic Carbon			2.50E-03		7.01E-09			1.05E+03	6.80E-04	6.80E-07
ZrO2:2H2O			2.55E-06		1.75E-11			7.48E+00	1.70E-06	1.70E-09
Hg			7.51E-02	7.13E-02	2.50E-11		3.38E-02	2.16E+00	4.90E-07	4.90E-10
TcO2										
Cl2										
CO										
CO2			4.39E+01		5.01E-08			1.94E+03	4.40E-04	4.40E-07
F2										
H2										
I2										
N2										
N2O			8.54E-04							
NO			1.17E+01							
NO2										
O2										
SO2										
Dicyclopentadiene										
Glycolic Anion			1.47E+00		4.98E-10			5.61E-08	1.27E-14	1.27E-17
H2S										
Glycolic Acid										
Kerosene										
NH3										
Oligomer										
Sulfur										

STREAM NAME	346	347	348	349	351	352	353	400	401	402
SOLID COMPONENTS										
Total Mass Flow (MT)			1.27E+00					1.62E+04		
Radionuclides (Ci)										
Am-241			4.83E+00					2.58E+02		
C-14			1.09E-01					1.31E-01		
Cs-137			1.54E+02					2.32E+04		
Ba-137			1.46E+02					2.21E+04		
Np-237			3.14E-03					2.26E-01		
Pu-239			1.27E+00					5.41E+01		
Pu-240			3.15E-01					1.41E+01		
Pu-241			3.54E+00					1.58E+02		
Sr-90			2.55E+03					6.22E+04		
Y-90			2.55E+03					6.22E+04		
Tc-99			4.69E-01					7.08E+02		
Total Curies			5.42E+03					1.71E+05		
Chemicals (MT)										
Ag+			7.40E-05					8.87E-05		
Al+3			3.73E-02					9.76E-02		
Am+3			1.41E-06					1.69E-06		
As+5			1.13E-07					1.36E-07		
Ba+2			1.87E-04					2.24E-04		
Be+2			1.54E-07					1.84E-07		
Bi+3			1.26E-02					1.51E-02		
Ca+2			7.24E-03					5.36E+02		
Cd+2			3.28E-04					3.93E-04		
Ce+3			1.18E-02					1.41E-02		
Cm+3			8.78E-10					1.05E-09		
Co+3			7.43E-11					8.90E-11		
Cr+3			2.89E-03					6.92E-03		
Cs+			1.00E-05					1.20E-05		
Cu+2			9.42E-06					1.13E-05		
Fe+3			3.81E-02					4.57E-02		
Hg+2			4.41E-06					5.28E-06		
K+			1.48E-03					1.77E-03		
La+3			1.15E-03					1.38E-03		
Mg+2			4.13E-04					4.94E-04		
Mn+4			9.00E-03					1.08E-02		
Mo+6			1.61E-06					1.93E-06		
Na+			2.92E-02					4.15E-02		
Ni+3			1.03E-02					1.24E-02		
Np+4			4.44E-06					5.33E-06		
Pb+4			1.47E-03					1.76E-03		
Pu+4			2.18E-05					2.62E-05		
Rh+3			9.63E-06					1.15E-05		
Se+6			1.66E-04					1.98E-04		
Si+4			1.16E-02					1.39E-02		
Sr+2			1.83E-03					2.19E-03		
Th+4			1.40E-04					1.67E-04		
Ti+4			7.73E-06					9.27E-06		
UO2+2			7.72E-02					9.25E-02		
Zn+2			2.53E-05					3.03E-05		
Cl-			4.51E-04					4.60E+00		
CO3-2			5.45E-03					6.53E-03		
F-			3.42E-03					2.86E+02		
I-			6.98E-08					7.28E-04		
NO2-			3.09E-03					3.70E-03		
NO3-			4.93E-02					5.90E-02		
OH-			1.30E-01					2.73E-01		
PO4-3			2.43E-02					7.52E-02		
SO4-2			1.28E-03					1.53E-03		
TcO4-			4.54E-05					5.44E-05		
Cancrinite			1.35E-01					1.62E-01		
H2O										
MnO2			2.86E-05					5.45E-01		
Organic Carbon			4.36E-03					5.23E-03		
ZrO2:2H2O			5.98E-02					7.16E-02		
Ag2O			1.60E-07					1.10E-02		
AlPO4			6.64E-05					1.85E+02		
Al2O3			1.99E-04					6.52E+02		
Am2O3			3.10E-09					8.08E-05		
As2O5			3.48E-10					1.99E-06		
B2O3			8.51E-02					3.48E-03		
BaO			4.19E-07					2.81E-02		
BeO			8.55E-10					2.16E-06		
Bi2O3			2.81E-05					4.20E-01		
CaO			9.60E-05					1.46E+03		
CdO			7.56E-07					2.74E-01		
Ce2O3			2.76E-05					8.87E-02		
Cm2O3			1.93E-12					3.36E-09		
Co2O3			1.60E-12					6.55E-05		
Cr2O3			8.77E-06					1.37E+01		
Cs2O			2.11E-07					1.41E-03		
CuO			2.37E-08					3.95E-03		
Fe2O3			1.09E-04					1.57E+00		
FeO			1.04E-12					4.89E-05		
HgO								7.37E-04		
K2O			4.49E-06					2.70E+01		
La2O3			2.70E-06					8.97E-03		
Li2O			2.43E-02							
MgO			7.71E-05					3.40E-05		
MnO			4.24E-14					1.99E-06		
MoO3			4.84E-09					3.45E-04		
Na2O			2.91E-04					3.65E+03		

STREAM NAME	346	347	348	349	351	352	353	400	401	402
SOLID COMPONENTS										
Chemicals Continued (MT)										
Nd_2O_3			2.91E-05					3.69E-01		
NpO_2			1.01E-08					3.57E-04		
PbO_2			3.40E-06					3.48E-01		
PuO_2			4.96E-08					1.03E-03		
Rb_2O			1.78E-13					8.36E-06		
Re_2O_7			9.52E-14					4.48E-06		
Rh_2O_3			2.38E-08					3.39E-05		
Ru_2O_3			9.92E-13					4.60E-05		
SeO_3			5.34E-07					1.69E-05		
SiO_2			4.87E-01					8.55E+03		
SO_3			1.81E-06					5.17E+00		
SrO			4.31E-06					1.44E-02		
Tc_2O_7			8.54E-08					6.52E-02		
TeO_3			7.70E-13					3.57E-05		
ThO_2			3.18E-07					6.10E-06		
TiO_2			2.59E-08					4.96E-07		
UO_3			1.64E-04					3.58E+00		
ZrO			6.32E-08					3.20E-05		
ZrO_2			9.27E-05					1.87E-01		
Cement										
Cu										
$CuSO_4$										
Dicyclopentadiene										
Flyash										
Oligomer										
Na Loaded Resin								7.75E+02		
Sulfur										

STREAM NAME	403	404	405	406	407	408	409	410	411	412
LIQUID COMPONENTS										
Total Mass Flow (MT)	1.22E+06	5.46E+05	5.69E+05	5.69E+05		5.83E+04	1.29E+05	6.28E+05		9.29E+04
Volume (L)	1.22E+09	3.71E+08	3.93E+08	3.93E+08		5.83E+07	1.29E+08	6.17E+08		9.29E+07
Specific Gravity	1.00E+00	1.48E+00	1.45E+00	1.45E+00		1.00E+00	1.00E+00	1.02E+00		1.00E+00
Radionuclides (Ci)										
Am-241	1.78E-03	7.86E+03	7.86E+03	7.86E+03						
C-14	7.46E-04	3.29E+03	3.29E+03	3.29E+03				3.84E+03		
Cs-137	2.47E-01	1.09E+06	1.09E+06	1.09E+06				3.74E+05		
Ba-137	2.35E-01	1.04E+06	1.04E+06	1.04E+06				3.55E+05		
Np-237	1.57E-06	6.92E+00	6.92E+00	6.92E+00						
Pu-239	3.71E-04	1.64E+03	1.64E+03	1.64E+03						
Pu-240	9.70E-05	4.28E+02	4.28E+02	4.28E+02						
Pu-241	1.09E-03	4.80E+03	4.80E+03	4.80E+03						
Sr-90	4.17E-01	1.84E+06	1.84E+06	1.84E+06						
Y-90	4.17E-01	1.84E+06	1.84E+06	1.84E+06						
Tc-99	9.99E-03	4.42E+04	4.42E+04	4.42E+04				2.21E+04		
Total Curies	1.33E+00	5.87E+06	5.87E+06	5.87E+06				7.55E+05		
Chemicals (MT)										
Ag+	7.20E-08	3.18E-01	3.18E-01	3.18E-01						
Am+3	5.19E-10	2.29E-03	2.29E-03	2.29E-03						
As+5	9.11E-12	4.03E-05	4.03E-05	4.03E-05						
B+3	7.71E-09	3.41E-02	3.41E-02	3.41E-02						
Ba+2	1.78E-07	7.85E-01	7.85E-01	7.85E-01						
Be+2	5.46E-12	2.41E-05	2.41E-05	2.41E-05						
Bi+3	2.66E-06	1.17E+01	1.17E+01	1.17E+01						
Ca+2	6.08E-04	2.69E+03	2.69E+03	2.69E+03						
Cd+2	2.57E-06	1.14E+01	1.14E+01	1.14E+01				3.89E+00		
Ce+3	5.32E-07	2.35E+00	2.35E+00	2.35E+00						
Cm+3	2.14E-14	9.45E-08	9.45E-08	9.45E-08						
Co+3	3.28E-10	1.45E-03	1.45E-03	1.45E-03						
Cs+	1.43E-08	6.30E-02	6.30E-02	6.30E-02				2.16E-02		
Cu+2	2.22E-08	9.83E-02	9.83E-02	9.83E-02						
Fe+2	2.68E-10	1.18E-03	1.18E-03	1.18E-03						
Fe+3	7.73E-06	3.42E+01	3.42E+01	3.42E+01						
H+								2.30E+02		
Hg+2	1.31E-08	5.80E-02	5.80E-02	5.80E-02						
K+	1.60E-04	7.07E+02	7.07E+02	7.07E+02				7.36E+00		
La+3	5.37E-08	2.37E-01	2.37E-01	2.37E-01						
Mg+2	3.28E-11	1.45E-04	1.45E-04	1.45E-04						
Mn+2	1.09E-11	4.81E-05	4.81E-05	4.81E-05						
Mn+4	2.43E-06	1.07E+01	1.07E+01	1.07E+01						
Mo+6	1.71E-09	7.57E-03	7.57E-03	7.57E-03				3.94E-04		
Na+	5.28E-02	8.52E+04	8.52E+04	8.52E+04				8.88E+02		
Ni+3	1.85E-06	8.15E+00	8.15E+00	8.15E+00						
Np+4	2.22E-09	9.81E-03	9.81E-03	9.81E-03						
Pb+4	3.24E-06	1.43E+01	1.43E+01	1.43E+01				4.89E+00		
Pu+4	6.42E-09	2.84E-02	2.84E-02	2.84E-02						
Rb+	5.40E-11	2.38E-04	2.38E-04	2.38E-04						
Re+7	2.43E-11	1.07E-04	1.07E-04	1.07E-04						
Rh+3	1.91E-10	8.44E-04	8.44E-04	8.44E-04						
Ru+3	3.99E-10	1.76E-03	1.76E-03	1.76E-03				6.03E-04		
Se+6	6.78E-11	2.99E-04	2.99E-04	2.99E-04				1.70E-04		
Si+4	3.58E-06	1.58E+01	1.58E+01	1.58E+01						
Sr+2	8.55E-08	3.78E-01	3.78E-01	3.78E-01						
Te+6	2.79E-10	1.23E-03	1.23E-03	1.23E-03				4.21E-04		
UO2+2	2.38E-05	1.05E+02	1.05E+02	1.05E+02						
Zn+2	1.75E-10	7.72E-04	7.72E-04	7.72E-04						
Zr+4	5.46E-12	2.41E-05	2.41E-05	2.41E-05						
Al(OH)4-	2.81E-03	1.24E+04	1.24E+04	1.24E+04						
HO2-	1.02E-08	4.51E-02	4.51E-02	4.51E-02				4.64E-02		
Cl-	1.35E-03	2.98E+03	2.98E+03	2.98E+03				2.84E+03		
CO3-2										
Cr(OH)4-	1.53E-04	6.77E+02	6.77E+02	6.77E+02						
F-	6.51E-04	2.87E+03	2.87E+03	2.87E+03				2.11E+03		
I-	5.36E-07	2.37E+00	2.37E+00	2.37E+00				2.34E+00		
NO2-	2.13E-03	9.40E+03	9.40E+03	9.40E+03						
NO3-	5.95E-02	1.31E+05	1.31E+05	1.31E+05						
OH-	4.32E-03	1.91E+04	1.91E+04	1.91E+04				6.63E+02		
PO4-3	1.28E-03	5.67E+03	5.67E+03	5.67E+03				1.17E+03		
SO4-2	4.54E-04	2.01E+03	2.01E+03	2.01E+03						
TcO4-	9.68E-07	4.28E+00	4.28E+00	4.28E+00						
H2O	1.22E+06	2.68E+05	2.91E+05	2.91E+05				3.71E+05		9.29E+04
Organic Carbon	6.79E-04	1.05E+03	1.05E+03	1.05E+03						
ZrO2:2H2O	1.69E-06	7.48E+00	7.48E+00	7.48E+00						
Hg	4.89E-07	2.16E+00	2.16E+00	2.16E+00				2.20E+00		
TcO2								1.72E+00		
Cl2										
CO								2.38E+03		
CO2	4.40E-04	1.94E+03	1.94E+03	1.94E+03				1.91E+05		
F2										
H2										
I2										
N2							9.43E+03	4.14E+04		
N2O										
NO								2.46E+02		
NO2								1.51E+03		
O2							1.20E+05	1.20E+04		
SO2								1.21E+03		
Dicyclopentadiene										
Glycolic Anion	1.27E-14	5.61E-08	5.61E-08	5.61E-08						
H2S										
Glycolic Acid										
Kerosene						5.83E+04				
NEG										
Oligomer										
Sulfur										

STREAM NAME	403	404	405	406	407	408	409	410	411	412
SOLID COMPONENTS										
Total Mass Flow (MT)		1.62E+04	2.07E+04	2.07E+04	3.24E+05			9.48E+03	4.64E+05	
Radionuclides (Ci)										
Am-241		2.58E+02	3.38E+02	3.38E+02				1.64E+02	8.04E+03	
C-14		1.31E-01	1.31E-01	1.31E-01						
Cs-137		2.32E+04	3.05E+04	3.05E+04				1.50E+04	7.34E+05	
Ba-137		2.21E+04	2.90E+04	2.90E+04				1.42E+04	6.97E+05	
Np-237		2.26E-01	2.96E-01	2.96E-01				1.44E-01	7.07E+00	
Pu-239		5.41E+01	7.07E+01	7.07E+01				3.42E+01	1.68E+03	
Pu-240		1.41E+01	1.85E+01	1.85E+01				8.94E+00	4.38E+02	
Pu-241		1.58E+02	2.07E+02	2.07E+02				1.00E+02	4.91E+03	
Sr-90		6.22E+04	8.08E+04	8.08E+04				3.84E+04	1.88E+06	
Y-90		6.22E+04	8.08E+04	8.08E+04				3.84E+04	1.88E+06	
Tc-99		7.08E+02	9.31E+02	9.31E+02				4.60E+02	2.25E+04	
Total Curies		1.71E+05	2.23E+05	2.23E+05				1.07E+05	5.23E+06	
Chemicals (MT)										
Ag+		8.87E-05	8.87E-05	8.87E-05						
Al+3		9.76E-02	9.76E-02	9.76E-02						
Am+3		1.69E-06	1.69E-06	1.69E-06						
As+5		1.36E-07	1.36E-07	1.36E-07						
Ba+2		2.24E-04	2.24E-04	2.24E-04						
Be+2		1.84E-07	1.84E-07	1.84E-07						
Bi+3		1.51E-02	1.51E-02	1.51E-02						
Ca+2		5.36E+02	5.36E+02	5.36E+02						
Cd+2		3.93E-04	3.93E-04	3.93E-04						
Ce+3		1.41E-02	1.41E-02	1.41E-02						
Cm+3		1.05E-09	1.05E-09	1.05E-09						
Co+3		8.90E-11	8.90E-11	8.90E-11						
Cr+3		6.92E-03	6.92E-03	6.92E-03						
Cs+		1.20E-05	1.20E-05	1.20E-05						
Cu+2		1.13E-05	1.13E-05	1.13E-05						
Fe+3		4.57E-02	4.57E-02	4.57E-02						
Hg+2		5.28E-06	5.28E-06	5.28E-06						
K+		1.77E-03	1.77E-03	1.77E-03						
La+3		1.38E-03	1.38E-03	1.38E-03						
Mg+2		4.94E-04	4.94E-04	4.94E-04						
Mn+4		1.08E-02	1.08E-02	1.08E-02						
Mo+6		1.93E-06	1.93E-06	1.93E-06						
Na+		4.15E-02	4.15E-02	4.15E-02						
Ni+3		1.24E-02	1.24E-02	1.24E-02						
Np+4		5.33E-06	5.33E-06	5.33E-06						
Eu+4		1.76E-03	1.76E-03	1.76E-03						
Pu+4		2.62E-05	2.62E-05	2.62E-05						
Rh+3		1.15E-05	1.15E-05	1.15E-05						
Se+6		1.98E-04	1.98E-04	1.98E-04						
Si+4		1.39E-02	1.39E-02	1.39E-02						
Sr+2		2.19E-03	2.19E-03	2.19E-03						
Th+4		1.67E-04	1.67E-04	1.67E-04						
Ti+4		9.27E-06	9.27E-06	9.27E-06						
UO2+2		9.25E-02	9.25E-02	9.25E-02						
Zr+2		3.03E-05	3.03E-05	3.03E-05						
Cl-		4.60E+00	6.05E+00	6.05E+00				2.99E+00	1.46E+02	
CO3-2		6.53E-03	6.53E-03	6.53E-03						
F-		2.86E+02	2.96E+02	2.96E+02				2.12E+01	1.04E+03	
I-		7.28E-04	9.58E-04	9.58E-04				4.73E-04	2.32E-02	
NO2-		3.70E-03	3.70E-03	3.70E-03						
NO3-		5.90E-02	5.90E-02	5.90E-02						
OH-		2.73E-01	2.73E-01	2.73E-01						
PO4-3		7.52E-02	7.52E-02	7.52E-02						
SO4-2		1.53E-03	1.53E-03	1.53E-03						
TcO4-		5.44E-05	5.44E-05	5.44E-05						
Cancrinite		1.62E-01	1.62E-01	1.62E-01						
H2O										
MnO2		5.45E-01	7.17E-01	7.17E-01				3.54E-01	1.74E+01	
Organic Carbon		5.23E-03	5.23E-03	5.23E-03						
ZrO2:2H2O		7.16E-02	7.16E-02	7.16E-02						
Ag2O		1.10E-02	1.44E-02	1.44E-02				7.12E-03	3.49E-01	
AlPO4		1.85E+02	2.44E+02	2.44E+02				1.20E+02	5.90E+03	
Al2O3		6.52E+02	8.57E+02	8.57E+02	1.61E+04			4.24E+02	2.08E+04	
Am2O3		8.08E-05	1.06E-04	1.06E-04				5.25E-05	2.57E-03	
As2O5		1.99E-06	2.61E-06	2.61E-06				1.29E-06	6.33E-05	
B2O3		3.48E-03	4.58E-03	4.58E-03				2.26E-03	1.11E-01	
BaO		2.81E-02	3.70E-02	3.70E-02				1.83E-02	8.96E-01	
BeO		2.16E-06	2.84E-06	2.84E-06				1.41E-06	6.89E-05	
Bi2O3		4.20E-01	5.52E-01	5.52E-01				2.73E-01	1.34E+01	
CaO		1.46E+03	1.92E+03	1.92E+03	4.10E+04			9.48E+02	4.64E+04	
CdO		2.74E-01	3.60E-01	3.60E-01				1.78E-01	8.72E+00	
Ce2O3		8.87E-02	1.17E-01	1.17E-01				5.77E-02	2.83E+00	
Cm2O3		3.36E-09	4.42E-09	4.42E-09				2.18E-09	1.07E-07	
Co2O3		6.55E-05	8.61E-05	8.61E-05				4.26E-05	2.09E-03	
Cr2O3		1.37E+01	1.81E+01	1.81E+01				8.93E+00	4.38E+02	
Cs2O		1.41E-03	1.85E-03	1.85E-03				9.15E-04	4.49E-02	
CuO		3.95E-03	5.19E-03	5.19E-03				2.56E-03	1.26E-01	
Fe2O3		1.57E+00	2.06E+00	2.06E+00				1.02E+00	5.00E+01	
FeO		4.89E-05	6.42E-05	6.42E-05				3.18E-05	1.56E-03	
HgO		7.37E-04	9.70E-04	9.70E-04				4.79E-04	2.35E-02	
K2O		2.70E+01	3.55E+01	3.55E+01				1.76E+01	8.61E+02	
La2O3		8.97E-03	1.18E-02	1.18E-02				5.83E-03	2.86E-01	
Li2O										
MgO		3.40E-05	4.47E-05	4.47E-05				2.21E-05	1.08E-03	
MnO		1.99E-06	2.62E-06	2.62E-06				1.30E-06	6.35E-05	
MoO3		3.45E-04	4.54E-04	4.54E-04				2.24E-04	1.10E-02	
Na2O		3.65E+03	4.79E+03	4.79E+03				2.37E+03	1.16E+05	

STREAM NAME	403	404	405	406	407	408	409	410	411	412
SOLID COMPONENTS										
Chemicals Continued (MT)										
Ni2O3		3.69E-01	4.85E-01	4.85E-01				2.40E-01	1.18E+01	
NpO2		3.57E-04	4.70E-04	4.70E-04				2.32E-04	1.14E-02	
PbO2		3.48E-01	4.58E-01	4.58E-01				2.26E-01	1.11E+01	
PuO2		1.03E-03	1.36E-03	1.36E-03				6.71E-04	3.29E-02	
Rb2O		8.36E-06	1.10E-05	1.10E-05				5.43E-06	2.66E-04	
Re2O7		4.48E-06	5.89E-06	5.89E-06				2.91E-06	1.43E-04	
Rh2O3		3.39E-05	4.45E-05	4.45E-05				2.20E-05	1.08E-03	
Ru2O3		4.60E-05	6.05E-05	6.05E-05				2.99E-05	1.47E-03	
SeO3		1.69E-05	2.22E-05	2.22E-05				1.10E-05	5.38E-04	
SiO2		8.55E+03	1.12E+04	1.12E+04	2.67E+05			5.56E+03	2.72E+05	
SO3		5.17E+00	6.80E+00	6.80E+00				3.36E+00	1.65E+02	
SrO		1.44E-02	1.89E-02	1.89E-02				9.33E-03	4.57E-01	
Tc2O7		6.52E-02	8.57E-02	8.57E-02				4.24E-02	2.08E+00	
TeO3		3.57E-05	4.70E-05	4.70E-05				2.32E-05	1.14E-03	
ThO2		6.10E-06	8.02E-06	8.02E-06				3.97E-06	1.94E-04	
TiO2		4.96E-07	6.52E-07	6.52E-07				3.22E-07	1.58E-05	
UO3		3.58E+00	4.71E+00	4.71E+00				2.33E+00	1.14E+02	
ZrO		3.20E-05	4.21E-05	4.21E-05				2.08E-05	1.02E-03	
ZrO2		1.87E-01	2.46E-01	2.46E-01				1.22E-01	5.97E+00	
Cement										
Cu										
CuSO4										
Dicyclopentadiene										
Flyash										
Oligomer										
Na Loaded Resin		7.75E+02	7.75E+02	7.75E+02						
Sulfur										

STREAM NAME	413	414	415	416	417	418	419	420	421	422
LIQUID COMPONENTS										
Total Mass Flow (MT)	9.29E+04	9.20E+06	9.29E+06	4.64E+05	9.20E+03	9.74E+06	4.55E+05	9.29E+06	9.29E+06	9.29E+06
Volume (L)	9.29E+07	9.20E+09	9.29E+09	4.64E+08	9.20E+06	9.74E+09	4.55E+08	9.29E+09	9.29E+09	9.29E+09
Specific Gravity	1.00E+00	1.00E+00	1.00E+00	1.00E+00	1.00E+00	1.00E+00	1.00E+00	1.00E+00	1.00E+00	1.00E+00
Radionuclides (Ci)										
Am-241										
C-14										
Cs-137										
Ba-137										
Np-237										
Pu-239										
Pu-240										
Pu-241										
Sr-90										
Y-90										
Tc-99										
Total Curies										
Chemicals (MT)										
Ag+										
Am+3										
As+5										
B+3										
Ba+2										
Be+2										
Bi+3										
Ca+2										
Cd+2										
Ce+3										
Cm+3										
Co+3										
Cs+										
Cu+2										
Fe+2										
Fe+3										
H+										
Hg+2										
K+										
La+3										
Mg+2										
Mn+2										
Mn+4										
Mo+6										
Na+										
Ni+3										
Np+4										
Pb+4										
Pu+4										
Rb+										
Re+7										
Rh+3										
Ru+3										
Se+6										
Si+4										
Sr+2										
Te+6										
UO2+2										
Zn+2										
Zr+4										
Al(OH)4-										
HO2-										
Cl-										
CO3-2										
Cr(OH)4-										
F-										
I-										
NO2-										
NO3-										
OH-										
PO4-3										
SO4-2										
TcO4-										
H2O	9.29E+04	9.20E+06	9.29E+06	4.64E+05	9.20E+03	9.74E+06	4.55E+05	9.29E+06	9.29E+06	9.29E+06
Organic Carbon										
ZrO2:2H2O										
Hg										
TcO2										
Cl2										
CO										
CO2										
F2										
H2										
I2										
N2										
N2O										
NO										
NO2										
O2										
SO2										
Dicyclopentadiene										
Glycolic Anion										
H2S										
Glycolic Acid										
Kerosene										
NH3										
Oligomer										
Sulfur										

STREAM NAME	413	414	415	416	417	418	419	420	421	422
SOLID COMPONENTS										
Total Mass Flow (MT)		4.64E+05	4.64E+05		4.60E+05	4.64E+03	4.64E+03	4.64E+00	4.64E+00	4.64E+00
Radionuclides (Ci)										
Am-241		8.04E+03	8.04E+03		7.96E+03	8.04E+01	8.03E+01	8.04E-02	8.04E-02	8.04E-02
C-14										
Cs-137		7.34E+05	7.34E+05		7.27E+05	7.34E+03	7.33E+03	7.34E+00	7.34E+00	7.34E+00
Ba-137		6.97E+05	6.97E+05		6.90E+05	6.97E+03	6.97E+03	6.97E+00	6.97E+00	6.97E+00
Np-237		7.07E+00	7.07E+00		7.00E+00	7.07E-02	7.06E-02	7.07E-05	7.07E-05	7.07E-05
Pu-239		1.68E+03	1.68E+03		1.66E+03	1.68E+01	1.67E+01	1.68E-02	1.68E-02	1.68E-02
Pu-240		4.38E+02	4.38E+02		4.34E+02	4.38E+00	4.38E+00	4.38E-03	4.38E-03	4.38E-03
Pu-241		4.91E+03	4.91E+03		4.86E+03	4.91E+01	4.91E+01	4.91E-02	4.91E-02	4.91E-02
Sr-90		1.88E+06	1.88E+06		1.86E+06	1.88E+04	1.88E+04	1.88E+01	1.88E+01	1.88E+01
Y-90		1.88E+06	1.88E+06		1.86E+06	1.88E+04	1.88E+04	1.88E+01	1.88E+01	1.88E+01
Tc-99		2.25E+04	2.25E+04		2.23E+04	2.25E+02	2.25E+02	2.25E-01	2.25E-01	2.25E-01
Total Curies		5.23E+06	5.23E+06		5.18E+06	5.23E+04	5.23E+04	5.23E+01	5.23E+01	5.23E+01
Chemicals (MT)										
Ag+										
Al+3										
Am+3										
As+5										
Ba+2										
Be+2										
Bi+3										
Ca+2										
Cd+2										
Ce+3										
Cm+3										
Co+3										
Cr+3										
Cs+										
Cu+2										
Fe+3										
Hg+2										
K+										
La+3										
Mg+2										
Mn+4										
Mo+6										
Na+										
Ni+3										
Np+4										
Pb+4										
Pu+4										
Rh+3										
Se+6										
Si+4										
Sr+2										
Th+4										
Ti+4										
UO2+2										
Zn+2										
Cl-		1.46E+02	1.46E+02		1.45E+02	1.46E+00	1.46E+00	1.46E-03	1.46E-03	1.46E-03
CO3-2										
F-		1.04E+03	1.04E+03		1.03E+03	1.04E+01	1.04E+01	1.04E-02	1.04E-02	1.04E-02
I-		2.32E-02	2.32E-02		2.30E-02	2.32E-04	2.32E-04	2.32E-07	2.32E-07	2.32E-07
NO2-										
NO3-										
OH-										
PO4-3										
SO4-2										
TcO4-										
Cancrinite										
H2O										
MnO2		1.74E+01	1.74E+01		1.72E+01	1.74E-01	1.74E-01	1.74E-04	1.74E-04	1.74E-04
Organic Carbon										
ZrO2:2H2O										
Ag2O		3.49E-01	3.49E-01		3.46E-01	3.49E-03	3.49E-03	3.49E-06	3.49E-06	3.49E-06
AlPO4		5.90E+03	5.90E+03		5.84E+03	5.90E+01	5.89E+01	5.90E-02	5.90E-02	5.90E-02
Al2O3		2.08E+04	2.08E+04		2.06E+04	2.08E+02	2.07E+02	2.08E-01	2.08E-01	2.08E-01
Am2O3		2.57E-03	2.57E-03		2.55E-03	2.57E-05	2.57E-05	2.57E-08	2.57E-08	2.57E-08
As2O5		6.33E-05	6.33E-05		6.26E-05	6.33E-07	6.32E-07	6.33E-10	6.33E-10	6.33E-10
B2O3		1.11E-01	1.11E-01		1.10E-01	1.11E-03	1.11E-03	1.11E-06	1.11E-06	1.11E-06
BaO		8.96E-01	8.96E-01		8.87E-01	8.96E-03	8.95E-03	8.96E-06	8.96E-06	8.96E-06
BeO		6.89E-05	6.89E-05		6.82E-05	6.89E-07	6.88E-07	6.89E-10	6.89E-10	6.89E-10
Bi2O3		1.34E+01	1.34E+01		1.32E+01	1.34E-01	1.34E-01	1.34E-04	1.34E-04	1.34E-04
CaO		4.64E+04	4.64E+04		4.60E+04	4.64E+02	4.64E+02	4.64E-01	4.64E-01	4.64E-01
CdO		8.72E+00	8.72E+00		8.63E+00	8.72E-02	8.71E-02	8.72E-05	8.72E-05	8.72E-05
Ce2O3		2.83E+00	2.83E+00		2.80E+00	2.83E-02	2.82E-02	2.83E-05	2.83E-05	2.83E-05
Cm2O3		1.07E-07	1.07E-07		1.06E-07	1.07E-09	1.07E-09	1.07E-12	1.07E-12	1.07E-12
Co2O3		2.09E-03	2.09E-03		2.06E-03	2.09E-05	2.08E-05	2.09E-08	2.09E-08	2.09E-08
Cr2O3		4.38E+02	4.38E+02		4.33E+02	4.38E+00	4.37E+00	4.38E-03	4.38E-03	4.38E-03
Cs2O		4.49E-02	4.49E-02		4.44E-02	4.49E-04	4.48E-04	4.49E-07	4.49E-07	4.49E-07
CuO		1.26E-01	1.26E-01		1.24E-01	1.26E-03	1.26E-03	1.26E-06	1.26E-06	1.26E-06
Fe2O3		5.00E+01	5.00E+01		4.95E+01	5.00E-01	4.99E-01	5.00E-04	5.00E-04	5.00E-04
FeO		1.56E-03	1.56E-03		1.54E-03	1.56E-05	1.55E-05	1.56E-08	1.56E-08	1.56E-08
HgO		2.35E-02	2.35E-02		2.33E-02	2.35E-04	2.35E-04	2.35E-07	2.35E-07	2.35E-07
K2O		8.61E+02	8.61E+02		8.52E+02	8.61E+00	8.60E+00	8.61E-03	8.61E-03	8.61E-03
La2O3		2.86E-01	2.86E-01		2.83E-01	2.86E-03	2.85E-03	2.86E-06	2.86E-06	2.86E-06
Li2O										
MgO		1.08E-03	1.08E-03		1.07E-03	1.08E-05	1.08E-05	1.08E-08	1.08E-08	1.08E-08
MnO		6.35E-05	6.35E-05		6.29E-05	6.35E-07	6.34E-07	6.35E-10	6.35E-10	6.35E-10
MoO3		1.10E-02	1.10E-02		1.09E-02	1.10E-04	1.10E-04	1.10E-07	1.10E-07	1.10E-07
Na2O		1.16E+05	1.16E+05		1.15E+05	1.16E+03	1.16E+03	1.16E+00	1.16E+00	1.16E+00

STREAM NAME	413	414	415	416	417	418	419	420	421	422
SOLID COMPONENTS										
Chemicals Continued (MT)										
Ni2O3		1.18E+01	1.18E+01		1.16E+01	1.18E-01	1.17E-01	1.18E-04	1.18E-04	1.18E-04
NpO2		1.14E-02	1.14E-02		1.13E-02	1.14E-04	1.14E-04	1.14E-07	1.14E-07	1.14E-07
PbO2		1.11E+01	1.11E+01		1.10E+01	1.11E-01	1.11E-01	1.11E-04	1.11E-04	1.11E-04
PuO2		3.29E-02	3.29E-02		3.26E-02	3.29E-04	3.28E-04	3.29E-07	3.29E-07	3.29E-07
Rb2O		2.66E-04	2.66E-04		2.64E-04	2.66E-06	2.66E-06	2.66E-09	2.66E-09	2.66E-09
Re2O7		1.43E-04	1.43E-04		1.41E-04	1.43E-06	1.43E-06	1.43E-09	1.43E-09	1.43E-09
Rh2O3		1.08E-03	1.08E-03		1.07E-03	1.08E-05	1.08E-05	1.08E-08	1.08E-08	1.08E-08
Ru2O3		1.47E-03	1.47E-03		1.45E-03	1.47E-05	1.46E-05	1.47E-08	1.47E-08	1.47E-08
SeO3		5.38E-04	5.38E-04		5.32E-04	5.38E-06	5.37E-06	5.38E-09	5.38E-09	5.38E-09
SiO2		2.72E+05	2.72E+05		2.70E+05	2.72E+03	2.72E+03	2.72E+00	2.72E+00	2.72E+00
SO3		1.65E+02	1.65E+02		1.63E+02	1.65E+00	1.65E+00	1.65E-03	1.65E-03	1.65E-03
SnO		4.57E-01	4.57E-01		4.53E-01	4.57E-03	4.57E-03	4.57E-06	4.57E-06	4.57E-06
Tc2O7		2.08E+00	2.08E+00		2.06E+00	2.08E-02	2.07E-02	2.08E-05	2.08E-05	2.08E-05
TeO3		1.14E-03	1.14E-03		1.13E-03	1.14E-05	1.14E-05	1.14E-08	1.14E-08	1.14E-08
ThO2		1.94E-04	1.94E-04		1.92E-04	1.94E-06	1.94E-06	1.94E-09	1.94E-09	1.94E-09
TiO2		1.58E-05	1.58E-05		1.56E-05	1.58E-07	1.58E-07	1.58E-10	1.58E-10	1.58E-10
UO3		1.14E+02	1.14E+02		1.13E+02	1.14E+00	1.14E+00	1.14E-03	1.14E-03	1.14E-03
ZnO		1.02E-03	1.02E-03		1.01E-03	1.02E-05	1.02E-05	1.02E-08	1.02E-08	1.02E-08
ZrO2		5.97E+00	5.97E+00		5.91E+00	5.97E-02	5.96E-02	5.97E-05	5.97E-05	5.97E-05
Cement										
Cu										
CuSO4										
Dicyclopentadiene										
Flyash										
Oligomer										
Na Loaded Resin										
Sulfur										

STREAM NAME	423	424	425	426	427	428	429	430	431	432
LIQUID COMPONENTS										
Total Mass Flow (MT)	3.87E+06	3.87E+06	5.87E+05	5.72E+05	1.55E+04	1.55E+04	3.29E+06	3.29E+04	3.26E+06	3.26E+06
Volume (L)	3.87E+09	3.87E+09	5.87E+08	5.72E+08	1.55E+07	1.55E+07	3.29E+09	3.29E+07	3.26E+09	3.26E+09
Specific Gravity	1.00E+00	1.00E+00	1.00E+00	1.00E+00	1.00E+00	1.00E+00	1.00E+00	1.00E+00	1.00E+00	1.00E+00
Radionuclides (Ci)										
Am-241										
C-14										
Cs-137										
Ba-137										
Np-237										
Pu-239										
Pu-240										
Pu-241										
Sr-90										
Y-90										
Tc-99										
Total Curies										
Chemicals (MT)										
Ag+										
Am+3										
As+5										
B+3										
Ba+2										
Be+2										
Bi+3										
Ca+2										
Cd+2										
Ce+3										
Cm+3										
Co+3										
Cs+										
Cu+2										
Fe+2										
Fe+3										
H+										
Hg+2										
K+										
La+3										
Mg+2										
Mn+2										
Mn+4										
Mo+6										
Na+										
Ni+3										
Np+4										
Pb+4										
Pu+4										
Rb+										
Re+7										
Rh+3										
Ru+3										
Se+6										
Si+4										
Sr+2										
Te+6										
UO2+2										
Zn+2										
Zr+4										
Al(OH)4-										
BO2-										
Cl-										
CO3-2										
Cr(OH)4-										
F-										
I-										
NO2-										
NO3-										
OH-										
PO4-3										
SO4-2										
TcO4-										
H2O	4.30E+04	4.30E+04	1.55E+04		1.55E+04	1.55E+04	3.66E+04	3.66E+02	3.63E+04	3.63E+04
Organic Carbon										
ZrO2:2H2O										
Hg										
TcO2										
Cl2										
CO										
CO2										
F2										
H2										
I2										
N2	3.02E+06	3.02E+06	4.52E+05	4.52E+05			2.57E+06	2.57E+04	2.55E+06	2.55E+06
N2O										
NO										
NO2										
O2	8.04E+05	8.04E+05	1.20E+05	1.20E+05			6.84E+05	6.84E+03	6.77E+05	6.77E+05
SO2										
Dicyclopentadiene										
Glycolic Anion										
H2S										
Glycolic Acid										
Kerosene										
NH3										
Oligomer										
Sulfur										

STREAM NAME	423	424	425	426	427	428	429	430	431	432
SOLID COMPONENTS										
Total Mass Flow (MT)			4.60E+02	4.60E+02			4.59E+05	4.59E+03	4.55E+05	4.55E+00
Radionuclides (Ci)										
Am-241			7.96E+00	7.96E+00			7.95E+03	7.95E+01	7.87E+03	7.87E-02
C-14			7.27E+02	7.27E+02			7.26E+05	7.26E+03	7.19E+05	7.19E+00
Cs-137			6.90E+02	6.90E+02			6.90E+05	6.90E+03	6.83E+05	6.83E+00
Ba-137			7.00E-03	7.00E-03			6.99E+00	6.99E-02	6.92E+00	6.92E-05
Np-237			1.66E+00	1.66E+00			1.66E+03	1.66E+01	1.64E+03	1.64E-02
Pu-239			4.34E-01	4.34E-01			4.33E+02	4.33E+00	4.29E+02	4.29E-03
Pu-240			4.86E+00	4.86E+00			4.86E+03	4.86E+01	4.81E+03	4.81E-02
Pu-241			1.86E+03	1.86E+03			1.86E+06	1.86E+04	1.84E+06	1.84E+01
Sr-90			1.86E+03	1.86E+03			1.86E+06	1.86E+04	1.84E+06	1.84E+01
Y-90			2.23E+01	2.23E+01			2.23E+04	2.23E+02	2.21E+04	2.21E-01
Tc-99			5.18E+03	5.18E+03			5.18E+06	5.18E+04	5.13E+06	5.13E+01
Total Curies										
Chemicals (MT)										
Ag+										
Al+3										
Am+3										
As+5										
Be+2										
Be+2										
Bi+3										
Ca+2										
Cd+2										
Ce+3										
Cm+3										
Co+3										
Cr+3										
Cs+										
Cu+2										
Fe+3										
Hg+2										
K+										
La+3										
Mg+2										
Mn+4										
Mo+6										
Na+										
Ni+3										
Np+4										
Pb+4										
Pu+4										
Rh+3										
Se+6										
Si+4										
Sr+2										
Th+4										
Ti+4										
UO2+2										
Zn+2										
Cl-			1.45E-01	1.45E-01			1.45E+02	1.45E+00	1.43E+02	1.43E-03
CO3-2			1.03E+00	1.03E+00			1.03E+03	1.03E+01	1.02E+03	1.02E-02
F-			2.30E-05	2.30E-05			2.29E-02	2.29E-04	2.27E-02	2.27E-07
I-										
NO2-										
NO3-										
OH-										
PO4-3										
SO4-2										
TcO4-										
Cancrinite										
H2O										
MnO2			1.72E-02	1.72E-02			1.72E+01	1.72E-01	1.70E+01	1.70E-04
Organic Carbon										
ZrO2:2H2O										
Ag2O			3.46E-04	3.46E-04			3.45E-01	3.45E-03	3.42E-01	3.42E-06
AlPO4			5.84E+00	5.84E+00			5.84E+03	5.84E+01	5.78E+03	5.78E-02
Al2O3			2.06E+01	2.06E+01			2.05E+04	2.05E+02	2.03E+04	2.03E-01
As2O3			2.55E-06	2.55E-06			2.55E-03	2.55E-05	2.52E-03	2.52E-08
As2O5			6.26E-08	6.26E-08			6.26E-05	6.26E-07	6.19E-05	6.19E-10
B2O3			1.10E-04	1.10E-04			1.10E-01	1.10E-03	1.09E-01	1.09E-06
BaO			8.87E-04	8.87E-04			8.86E-01	8.86E-03	8.77E-01	8.77E-06
BeO			6.82E-08	6.82E-08			6.81E-05	6.81E-07	6.74E-05	6.74E-10
Bi2O3			1.32E-02	1.32E-02			1.32E+01	1.32E-01	1.31E+01	1.31E-04
CaO			4.60E+01	4.60E+01			4.59E+04	4.59E+02	4.55E+04	4.55E-01
CdO			8.63E-03	8.63E-03			8.62E+00	8.62E-02	8.54E+00	8.54E-05
Ce2O3			2.80E-03	2.80E-03			2.80E+00	2.80E-02	2.77E+00	2.77E-05
Cm2O3			1.06E-10	1.06E-10			1.06E-07	1.06E-09	1.05E-07	1.05E-12
Co2O3			2.06E-06	2.06E-06			2.06E-03	2.06E-05	2.04E-03	2.04E-08
Cr2O3			4.33E-01	4.33E-01			4.33E+02	4.33E+00	4.29E+02	4.29E-03
Cs2O			4.44E-05	4.44E-05			4.44E-02	4.44E-04	4.39E-02	4.39E-07
CuO			1.24E-04	1.24E-04			1.24E-01	1.24E-03	1.23E-01	1.23E-06
Fe2O3			4.95E-02	4.95E-02			4.94E+01	4.94E-01	4.89E+01	4.89E-04
FeO			1.54E-06	1.54E-06			1.54E-03	1.54E-05	1.52E-03	1.52E-08
HgO			2.33E-05	2.33E-05			2.32E-02	2.32E-04	2.30E-02	2.30E-07
K2O			8.52E-01	8.52E-01			8.51E+02	8.51E+00	8.43E+02	8.43E-03
La2O3			2.83E-04	2.83E-04			2.82E-01	2.82E-03	2.80E-01	2.80E-06
Li2O										
MgO			1.07E-06	1.07E-06			1.07E-03	1.07E-05	1.06E-03	1.06E-08
MnO			6.29E-08	6.29E-08			6.28E-05	6.28E-07	6.22E-05	6.22E-10
MoO3			1.09E-05	1.09E-05			1.09E-02	1.09E-04	1.08E-02	1.08E-07
Na2O			1.15E+02	1.15E+02			1.15E+05	1.15E+03	1.14E+05	1.14E+00

STREAM NAME	423	424	425	426	427	428	429	430	431	432
SOLID COMPONENTS										
Chemicals Continued (MT)										
Ni2O3			1.16E-02	1.16E-02			1.16E+01	1.16E-01	1.15E+01	1.15E-04
NpO2			1.13E-05	1.13E-05			1.13E-02	1.13E-04	1.11E-02	1.11E-07
PbO2			1.10E-02	1.10E-02			1.10E+01	1.10E-01	1.09E+01	1.09E-04
PuO2			3.26E-05	3.26E-05			3.25E-02	3.25E-04	3.22E-02	3.22E-07
Rb2O			2.64E-07	2.64E-07			2.63E-04	2.63E-06	2.61E-04	2.61E-09
Re2O7			1.41E-07	1.41E-07			1.41E-04	1.41E-06	1.40E-04	1.40E-09
Rh2O3			1.07E-06	1.07E-06			1.07E-03	1.07E-05	1.06E-03	1.06E-08
Ru2O3			1.45E-06	1.45E-06			1.45E-03	1.45E-05	1.43E-03	1.43E-08
SeO3			5.32E-07	5.32E-07			5.32E-04	5.32E-06	5.27E-04	5.27E-09
SiO2			2.70E+02	2.70E+02			2.69E+05	2.69E+03	2.67E+05	2.67E+00
SO3			1.63E-01	1.63E-01			1.63E+02	1.63E+00	1.61E+02	1.61E-03
SrO			4.53E-04	4.53E-04			4.52E-01	4.52E-03	4.48E-01	4.48E-06
Tc2O7			2.06E-03	2.06E-03			2.05E+00	2.05E-02	2.03E+00	2.03E-05
TeO3			1.13E-06	1.13E-06			1.13E-03	1.13E-05	1.11E-03	1.11E-08
ThO2			1.92E-07	1.92E-07			1.92E-04	1.92E-06	1.90E-04	1.90E-09
TiO2			1.56E-08	1.56E-08			1.56E-05	1.56E-07	1.55E-05	1.55E-10
UO3			1.13E-01	1.13E-01			1.13E+02	1.13E+00	1.12E+02	1.12E-03
ZnO			1.01E-06	1.01E-06			1.01E-03	1.01E-05	9.99E-04	9.99E-09
ZrO2			5.91E-03	5.91E-03			5.90E+00	5.90E-02	5.84E+00	5.84E-05
Cement										
Cu										
CuSO4										
Dicyclopentadiene										
Flyash										
Oligomer										
Na Loaded Resin										
Sulfur										

STREAM NAME	433	434	435	436	437	439	440	441	445	446
LIQUID COMPONENTS										
Total Mass Flow (MT)	4.50E+02	3.26E+06	4.50E+02	4.50E+02		1.43E+05	1.43E+05	2.04E+01	1.43E+05	1.36E+05
Volume (L)	4.50E+05	3.26E+09	4.50E+05	4.50E+05		1.43E+08	1.43E+08	2.04E+04	1.43E+08	1.36E+08
Specific Gravity	1.00E+00	1.00E+00	1.00E+00	1.00E+00		1.00E+00	1.00E+00	1.00E+00	1.00E+00	1.00E+00
Radionuclides (Ci)										
Am-241										
C-14										
Cs-137										
Ba-137										
Np-237										
Pu-239										
Pu-240										
Pu-241										
Sr-90										
Y-90										
Tc-99										
Total Curies										
Chemicals (MT)										
Ag+										
Am+3										
As+5										
B+3										
Ba+2										
Be+2										
Bi+3										
Ca+2										
Cd+2										
Ce+3										
Cm+3										
Co+3										
Cs+										
Cu+2										
Fe+2										
Fe+3										
H+										
Hg+2										
K+										
La+3										
Mg+2										
Mn+2										
Mn+4										
Mo+6										
Na+										
Ni+3										
Np+4										
Pb+4										
Pu+4										
Rb+										
Re+7										
Rh+3										
Ru+3										
Se+6										
Si+4										
Sr+2										
Te+6										
UO2+2										
Zr+2										
Zr+4										
Al(OH)4-										
ECO2-										
Cl-										
CO3-2										
Cr(OH)4-										
F-										
I-										
NO2-										
NO3-										
OH-										
PO4-3										
SO4-2										
TcO4-										
H2O	4.50E+02	3.63E+04	4.50E+02	4.50E+02						
Organic Carbon										
ZrO2:2H2O										
Hg										
TcO2										
Cl2										
CO										
CO2						2.04E+01	2.04E+01	2.04E+01	2.04E+01	
F2										
H2										
I2										
N2		2.55E+06								
N2O										
NO										
NO2										
O2		6.77E+05				2.01E-02	2.01E-02	2.01E-02	2.01E-02	
SO2										
Dicyclopentadiene										
Glycolic Anion						3.59E+03	3.59E+03		3.59E+03	
H2S										
Glycolic Acid										
Kerosene										
NH3										
Oligomer										
Sulfur						3.59E+03 1.36E+05	3.59E+03 1.36E+05		3.59E+03 1.36E+05	1.36E+05

STREAM NAME	433	434	435	436	437	439	440	441	445	446
SOLID COMPONENTS										
Total Mass Flow (MT)		2.27E-03	4.55E+00	4.55E+00	4.55E+05	4.55E+05	4.55E+05	5.98E+05		
Radionuclides (Ci)										
Am-241		3.93E-05	7.87E-02	7.87E-02	7.87E+03	7.87E+03	7.87E+03	7.87E+03		
C-14										
Cs-137		3.59E-03	7.18E+00	7.18E+00	7.19E+05	7.19E+05	7.19E+05	7.19E+05		
Ba-137		3.41E-03	6.82E+00	6.82E+00	6.83E+05	6.83E+05	6.83E+05	6.83E+05		
Np-237		3.46E-08	6.92E-05	6.92E-05	6.92E+00	6.92E+00	6.92E+00	6.92E+00		
Pu-239		8.20E-06	1.64E-02	1.64E-02	1.64E+03	1.64E+03	1.64E+03	1.64E+03		
Pu-240		2.14E-06	4.29E-03	4.29E-03	4.29E+02	4.29E+02	4.29E+02	4.29E+02		
Pu-241		2.40E-05	4.81E-02	4.81E-02	4.81E+03	4.81E+03	4.81E+03	4.81E+03		
Sr-90		9.22E-03	1.84E+01	1.84E+01	1.84E+06	1.84E+06	1.84E+06	1.84E+06		
Y-90		9.22E-03	1.84E+01	1.84E+01	1.84E+06	1.84E+06	1.84E+06	1.84E+06		
Tc-99		1.10E-04	2.21E-01	2.21E-01	2.21E+04	2.21E+04	2.21E+04	2.21E+04		
Total Curies		2.56E-02	5.12E+01	5.12E+01	5.13E+06	5.13E+06	5.13E+06	5.13E+06		
Chemicals (MT)										
Ag+										
Al+3										
Am+3										
As+5										
Ba+2										
Be+2										
Bi+3										
Ca+2										
Cd+2										
Ce+3										
Cm+3										
Co+3										
Cr+3										
Cs+										
Cu+2										
Fe+3										
Hg+2										
K+										
La+3										
Mg+2										
Mn+4										
Mo+6										
Na+										
Ni+3										
Np+4										
Pb+4										
Pu+4										
Rh+3										
Se+6										
Si+4										
Sr+2										
Th+4										
Ti+4										
UO2+2										
Zn+2										
Cl-		7.17E-07	1.43E-03	1.43E-03	1.43E+02	1.43E+02	1.43E+02	1.43E+02		
CO3-2										
F-		5.08E-06	1.02E-02	1.02E-02	1.02E+03	1.02E+03	1.02E+03	1.02E+03		
I-		1.14E-10	2.27E-07	2.27E-07	2.27E-02	2.27E-02	2.27E-02	2.27E-02		
NO2-										
NO3-										
OH-										
PO4-3										
SO4-2										
TcO4-										
Cancrinite										
H2O										
MnO2		8.50E-08	1.70E-04	1.70E-04	1.70E+01	1.70E+01	1.70E+01	1.70E+01		
Organic Carbon										
ZrO2:2H2O										
Ag2O		1.71E-09	3.42E-06	3.42E-06	3.42E-01	3.42E-01	3.42E-01	3.42E-01		
AlFO4		2.89E-05	5.77E-02	5.77E-02	5.78E+03	5.78E+03	5.78E+03	5.78E+03		
Al2O3		1.02E-04	2.03E-01	2.03E-01	2.03E+04	2.03E+04	2.03E+04	2.03E+04		
Am2O3		1.26E-11	2.52E-08	2.52E-08	2.52E-03	2.52E-03	2.52E-03	2.52E-03		
As2O5		3.10E-13	6.19E-10	6.19E-10	6.19E-05	6.19E-05	6.19E-05	6.19E-05		
B2O3		5.43E-10	1.09E-06	1.09E-06	1.09E-01	1.09E-01	1.09E-01	1.09E-01		
BaO		4.39E-09	8.77E-06	8.77E-06	8.77E-01	8.77E-01	8.77E-01	8.77E-01		
BeO		3.37E-13	6.74E-10	6.74E-10	6.74E-05	6.74E-05	6.74E-05	6.74E-05		
Bi2O3		6.55E-08	1.31E-04	1.31E-04	1.31E+01	1.31E+01	1.31E+01	1.31E+01		
CaO		2.27E-04	4.55E-01	4.55E-01	4.55E+04	4.55E+04	4.55E+04	4.55E+04		
CdO		4.27E-08	8.53E-05	8.53E-05	8.53E+00	8.53E+00	8.53E+00	8.53E+00		
Ce2O3		1.38E-08	2.77E-05	2.77E-05	2.77E+00	2.77E+00	2.77E+00	2.77E+00		
Cm2O3		5.24E-16	1.05E-12	1.05E-12	1.05E-07	1.05E-07	1.05E-07	1.05E-07		
Co2O3		1.02E-11	2.04E-08	2.04E-08	2.04E-03	2.04E-03	2.04E-03	2.04E-03		
Cr2O3		2.14E-06	4.28E-03	4.28E-03	4.29E+02	4.29E+02	4.29E+02	4.29E+02		
Cs2O		2.20E-10	4.39E-07	4.39E-07	4.39E-02	4.39E-02	4.39E-02	4.39E-02		
CuO		6.15E-10	1.23E-06	1.23E-06	1.23E-01	1.23E-01	1.23E-01	1.23E-01		
Fe2O3		2.45E-07	4.89E-04	4.89E-04	4.89E+01	4.89E+01	4.89E+01	4.89E+01		
FeO		7.62E-12	1.52E-08	1.52E-08	1.52E-03	1.52E-03	1.52E-03	1.52E-03		
HgO		1.15E-10	2.30E-07	2.30E-07	2.30E-02	2.30E-02	2.30E-02	2.30E-02		
K2O		4.21E-06	8.42E-03	8.42E-03	8.43E+02	8.43E+02	8.43E+02	8.43E+02		
La2O3		1.40E-09	2.80E-06	2.80E-06	2.80E-01	2.80E-01	2.80E-01	2.80E-01		
Li2O										
MgO		5.30E-12	1.06E-08	1.06E-08	1.06E-03	1.06E-03	1.06E-03	1.06E-03		
MnO		3.11E-13	6.21E-10	6.21E-10	6.22E-05	6.22E-05	6.22E-05	6.22E-05		
MoO3		5.38E-11	1.08E-07	1.08E-07	1.08E-02	1.08E-02	1.08E-02	1.08E-02		
Na2O		5.68E-04	1.14E+00	1.14E+00	1.14E+05	1.14E+05	1.14E+05	1.14E+05		

STREAM NAME	433	434	435	436	437	439	440	441	445	446
SOLID COMPONENTS										
Chemicals Continued (MT)										
Nd2O3		5.75E-08	1.15E-04	1.15E-04	1.15E+01	1.15E+01	1.15E+01	1.15E+01		
NpO2		5.57E-11	1.11E-07	1.11E-07	1.11E-02	1.11E-02	1.11E-02	1.11E-02		
PbO2		5.43E-08	1.09E-04	1.09E-04	1.09E+01	1.09E+01	1.09E+01	1.09E+01		
PuO2		1.61E-10	3.22E-07	3.22E-07	3.22E-02	3.22E-02	3.22E-02	3.22E-02		
Rb2O		1.30E-12	2.61E-09	2.61E-09	2.61E-04	2.61E-04	2.61E-04	2.61E-04		
Re2O7		6.99E-13	1.40E-09	1.40E-09	1.40E-04	1.40E-04	1.40E-04	1.40E-04		
Rh2O3		5.28E-12	1.06E-08	1.06E-08	1.06E-03	1.06E-03	1.06E-03	1.06E-03		
Ru2O3		7.17E-12	1.43E-08	1.43E-08	1.43E-03	1.43E-03	1.43E-03	1.43E-03		
SeO3		2.63E-12	5.26E-09	5.26E-09	5.27E-04	5.27E-04	5.27E-04	5.27E-04		
SiO2		1.33E-03	2.67E+00	2.67E+00	2.67E+05	2.67E+05	2.67E+05	2.67E+05		
SO3		8.06E-07	1.61E-03	1.61E-03	1.61E+02	1.61E+02	1.61E+02	1.61E+02		
SrO		2.24E-09	4.47E-06	4.47E-06	4.48E-01	4.48E-01	4.48E-01	4.48E-01		
Tc2O7		1.02E-08	2.03E-05	2.03E-05	2.03E+00	2.03E+00	2.03E+00	2.03E+00		
TeO3		5.57E-12	1.11E-08	1.11E-08	1.11E-03	1.11E-03	1.11E-03	1.11E-03		
ThO2		9.51E-13	1.90E-09	1.90E-09	1.90E-04	1.90E-04	1.90E-04	1.90E-04		
TiO2		7.73E-14	1.55E-10	1.55E-10	1.55E-05	1.55E-05	1.55E-05	1.55E-05		
UO3		5.58E-07	1.12E-03	1.12E-03	1.12E+02	1.12E+02	1.12E+02	1.12E+02		
ZnO		5.00E-12	9.99E-09	9.99E-09	9.99E-04	9.99E-04	9.99E-04	9.99E-04		
ZrO2		2.92E-08	5.84E-05	5.84E-05	5.84E+00	5.84E+00	5.84E+00	5.84E+00		
Cement										
Cu										
CuSO4										
Dicyclopentadiene										
Flyash								3.59E+03		
Oligomer										
Na Loaded Resin								3.59E+03		
Sulfur								1.36E+05		

STREAM NAME	447	448	449	450	451	510	511	512	513	514
LIQUID COMPONENTS										
Total Mass Flow (MT)	5.38E+02	3.59E+03	3.59E+03	1.43E+05	4.23E-01	3.29E+04			2.28E+04	2.28E+04
Volume (L)	5.38E+05	3.59E+06	3.59E+06	1.43E+08	2.75E+02	3.29E+07			2.28E+07	2.28E+07
Specific Gravity	1.00E+00	1.00E+00	1.00E+00	1.00E+00	1.54E+00	1.00E+00			1.00E+00	1.00E+00
Radionuclides (Ci)										
Am-241										
C-14										
Cs-137										
Ba-137										
Np-237										
Pu-239										
Pu-240										
Pu-241										
Sr-90										
Y-90										
Tc-99										
Total Curies										
Chemicals (MT)										
Ag+										
Am+3										
As+5										
B+3										
Ba+2										
Be+2										
Bi+3										
Ca+2										
Cd+2										
Ce+3										
Cm+3										
Co+3										
Cs+										
Cu+2										
Fe+2										
Fe+3										
H+										
Hg+2										
K+										
La+3										
Mg+2										
Mn+2										
Mn+4										
Mo+6										
Na+					1.22E-01					
Ni+3										
Np+4										
Pb+4										
Pu+4										
Rb+										
Re+7										
Rh+3										
Ru+3										
Se+6										
Si+4										
Sr+2										
Te+6										
UO2+2										
Zn+2										
Zr+4										
Al(OH)4-										
HO2-										
Cl-										
CO3-2										
Cr(OH)4-										
F-										
I-										
NO2-										
NO3-										
OH-					8.98E-02					
PO4-3										
SO4-2										
TcO4-										
H2O					2.11E-01	3.66E+02			2.28E+04	2.28E+04
Organic Carbon										
ZrO2:2H2O										
He										
TcO2										
Cl2										
CO	2.04E+01			2.04E+01						
CO2										
F2										
H2										
I2										
N2						2.57E+04				
N2O										
NO										
NO2	2.01E-02			2.01E-02						
O2						6.84E+03				
SO2										
Dicyclopentadiene		3.59E+03		3.59E+03						
Glycolic Anion										
H2S										
Glycolic Acid										
Kerosene										
NH3										
Oligomer			3.59E+03	3.59E+03						
Sulfur	5.18E+02			1.36E+05						

STREAM NAME	447	448	449	450	451	510	511	512	513	514
SOLID COMPONENTS										
Total Mass Flow (MT)						4.59E+03	4.59E+03	4.59E+03		4.59E+03
Radionuclides (Ci)										
Am-241										
C-14						7.95E+01	7.95E+01	7.95E+01		7.95E+01
Cs-137										
Ba-137						7.26E+03	7.26E+03	7.26E+03		7.26E+03
Np-237						6.90E+03	6.90E+03	6.90E+03		6.90E+03
Pu-239						6.99E-02	6.99E-02	6.99E-02		6.99E-02
Pu-240						1.66E+01	1.66E+01	1.66E+01		1.66E+01
Pu-241						4.33E+00	4.33E+00	4.33E+00		4.33E+00
Sr-90						4.86E+01	4.86E+01	4.86E+01		4.86E+01
Y-90						1.86E+04	1.86E+04	1.86E+04		1.86E+04
Tc-99						1.86E+04	1.86E+04	1.86E+04		1.86E+04
Total Curies						2.23E+02	2.23E+02	2.23E+02		2.23E+02
						5.18E+04	5.18E+04	5.18E+04		5.18E+04
Chemicals (MT)										
Ag+										
Al+3										
Am+3										
As+5										
Ba+2										
Be+2										
Bi+3										
Ca+2										
Cd+2										
Ce+3										
Cm+3										
Co+3										
Cr+3										
Cs+										
Cu+2										
Fe+3										
Hg+2										
K+										
La+3										
Mg+2										
Mn+4										
Mo+6										
Na+										
Ni+3										
Np+4										
Pb+4										
Pu+4										
Rh+3										
Se+6										
Si+4										
Sr+2										
Th+4										
Ti+4										
UO2+2										
Zn+2										
Cl-										
CO3-2						1.45E+00	1.45E+00	1.45E+00		1.45E+00
F-										
I-						1.03E+01	1.03E+01	1.03E+01		1.03E+01
NO2-						2.29E-04	2.29E-04	2.29E-04		2.29E-04
NO3-										
OH-										
PO4-3										
SO4-2										
TcO4-										
Cancrinite										
H2O										
MnO2										
Organic Carbon						1.72E-01	1.72E-01	1.72E-01		1.72E-01
ZrO2:2H2O										
Ag2O										
AlPO4						3.45E-03	3.45E-03	3.45E-03		3.45E-03
Al2O3						5.84E+01	5.84E+01	5.84E+01		5.84E+01
As2O3						2.05E+02	2.05E+02	2.05E+02		2.05E+02
As2O5						2.55E-05	2.55E-05	2.55E-05		2.55E-05
B2O3						6.26E-07	6.26E-07	6.26E-07		6.26E-07
BaO						1.10E-03	1.10E-03	1.10E-03		1.10E-03
BeO						8.86E-03	8.86E-03	8.86E-03		8.86E-03
Bi2O3						6.81E-07	6.81E-07	6.81E-07		6.81E-07
CaO						1.32E-01	1.32E-01	1.32E-01		1.32E-01
CdO						4.59E+02	4.59E+02	4.59E+02		4.59E+02
Ce2O3						8.62E-02	8.62E-02	8.62E-02		8.62E-02
Cm2O3						2.80E-02	2.80E-02	2.80E-02		2.80E-02
Co2O3						1.06E-09	1.06E-09	1.06E-09		1.06E-09
Cr2O3						2.06E-05	2.06E-05	2.06E-05		2.06E-05
Cs2O						4.33E+00	4.33E+00	4.33E+00		4.33E+00
CuO						4.44E-04	4.44E-04	4.44E-04		4.44E-04
Fe2O3						1.24E-03	1.24E-03	1.24E-03		1.24E-03
FeO						4.94E-01	4.94E-01	4.94E-01		4.94E-01
HgO						1.54E-05	1.54E-05	1.54E-05		1.54E-05
K2O						2.32E-04	2.32E-04	2.32E-04		2.32E-04
La2O3						8.51E+00	8.51E+00	8.51E+00		8.51E+00
Li2O						2.82E-03	2.82E-03	2.82E-03		2.82E-03
MgO										
MnO						1.07E-05	1.07E-05	1.07E-05		1.07E-05
MoO3						6.28E-07	6.28E-07	6.28E-07		6.28E-07
Na2O						1.09E-04	1.09E-04	1.09E-04		1.09E-04
						1.15E+03	1.15E+03	1.15E+03		1.15E+03

STREAM NAME	447	448	449	450	451	510	511	512	513	514
SOLID COMPONENTS										
Chemicals Continued (MT)										
Ni2O3						1.16E-01	1.16E-01	1.16E-01		1.16E-01
NpO2						1.13E-04	1.13E-04	1.13E-04		1.13E-04
PbO2						1.10E-01	1.10E-01	1.10E-01		1.10E-01
Pd2O						3.25E-04	3.25E-04	3.25E-04		3.25E-04
Re2O7						2.63E-06	2.63E-06	2.63E-06		2.63E-06
Rh2O3						1.41E-06	1.41E-06	1.41E-06		1.41E-06
Ru2O3						1.07E-05	1.07E-05	1.07E-05		1.07E-05
SeO3						1.45E-05	1.45E-05	1.45E-05		1.45E-05
SiO2						5.32E-06	5.32E-06	5.32E-06		5.32E-06
SO3						2.69E+03	2.69E+03	2.69E+03		2.69E+03
SrO						1.63E+00	1.63E+00	1.63E+00		1.63E+00
Tc2O7						4.52E-03	4.52E-03	4.52E-03		4.52E-03
TeO3						2.05E-02	2.05E-02	2.05E-02		2.05E-02
ThO2						1.13E-05	1.13E-05	1.13E-05		1.13E-05
TiO2						1.92E-06	1.92E-06	1.92E-06		1.92E-06
UO3						1.56E-07	1.56E-07	1.56E-07		1.56E-07
ZrO						1.13E+00	1.13E+00	1.13E+00		1.13E+00
ZrO2						1.01E-05	1.01E-05	1.01E-05		1.01E-05
Cement						5.90E-02	5.90E-02	5.90E-02		5.90E-02
Cu										
CuSO4										
Dicyclopentadiene										
Flyash										
Oligomer										
Na Loaded Resin										
Sulfur										

STREAM NAME	520	521	522	523	524	600	601	602	603	604
LIQUID COMPONENTS										
Total Mass Flow (MT)	3.29E+04	4.55E+00	3.29E+04	4.55E+00	4.55E+00	1.40E+06	5.05E+03	1.43E+06	3.13E+04	3.64E+04
Volume (L)	3.29E+07	4.55E+03	3.29E+07	4.55E+03	4.55E+03	1.40E+09	5.05E+06	1.43E+09	3.13E+07	3.64E+07
Specific Gravity	1.00E+00	1.00E+00	1.00E+00	1.00E+00	1.00E+00	1.00E+00	1.00E+00	1.00E+00	1.00E+00	1.00E+00
Radionuclides (Ci)										
Am-241										
C-14										
Cs-137									2.57E+03	2.57E+03
Ba-137										
Np-237										
Pu-239										
Pu-240										
Pu-241										
Sr-90										
Y-90										
Tc-99										
Total Curies						2.43E+05	8.75E+02	2.40E+05	1.26E+04	1.35E+04
						2.43E+05	8.75E+02	2.40E+05	1.52E+04	1.61E+04
Chemicals (MT)										
Ag+										
Am+3										
As+5										
B+3										
Ba+2										
Be+2										
Bi+3										
Ca+2										
Cd+2										
Ce+3										
Cm+3										
Co+3										
Cs+										
Cu+2										
Fe+2										
Fe+3										
H+						1.39E+01	5.01E-02	1.37E+01	7.21E-01	7.71E-01
Hg+2										
K+										
La+3										
Mg+2										
Mn+2										
Mn+4										
Mo+6										
Na+										
Ni+3										
Np+4										
Pb+4										
Pu+4										
Rb+										
Re+7										
Rh+3										
Ru+3										
Se+6										
Si+4										
Sr+2										
Te+6										
UO2+2										
Zn+2										
Zr+4										
Al(OH)4-										
BO2-										
Cl-										
CO3-2										
Cr(OH)4-										
F-										
I-										
NO2-										
NO3-						6.72E+02	2.42E+00	6.63E+02	3.49E+01	3.73E+01
OH-										
PO4-3										
SO4-2						1.14E+02	4.12E-01	1.13E+02	5.93E+00	6.35E+00
TcO4-						2.35E+01	8.48E-02	2.24E+01	1.18E+00	1.26E+00
H2O	3.66E+02	4.55E+00	3.66E+02	4.55E+00	4.55E+00	1.40E+06	5.05E+03	1.43E+06	2.42E+04	2.93E+04
Organic Carbon										
ZrO2:2H2O										
Hg						2.25E+00	8.08E-03	2.11E+00	2.28E-01	2.36E-01
TcO2								6.86E-01	3.61E-02	3.61E-02
Cl2									1.36E-02	1.36E-02
CO										
CO2									5.34E+03	5.34E+03
F2									7.60E-02	7.60E-02
H2										
I2									2.01E-03	2.01E-03
N2	2.57E+04		2.57E+04						1.84E+02	1.84E+02
N2O									1.71E+01	1.71E+01
NO									1.23E+03	1.23E+03
NO2									1.46E+02	1.46E+02
O2	6.84E+03		6.84E+03						1.49E+02	1.49E+02
SO2									1.16E+01	1.16E+01
Dicyclopentadiene										
Glycolic Anion										
H2S										
Glycolic Acid										
Kerosene										
NFG										
Oligomer									3.66E+00	3.66E+00
Sulfur										

STREAM NAME	520	521	522	523	524	600	601	602	603	604
SOLID COMPONENTS										
Total Mass Flow (MT)	4.59E-02		2.30E-05	4.59E-02	4.59E-02	1.28E+03	4.60E+00	1.26E+03	6.63E+01	7.09E+01
Radionuclides (Ci)										
Am-241	7.95E-04		3.97E-07	7.94E-04	7.94E-04	5.08E+03	1.83E+01	5.01E+03	2.64E+02	2.82E+02
C-14										
Cs-137	7.26E-02		3.63E-05	7.26E-02	7.26E-02	1.79E+06	6.45E+03	1.77E+06	9.30E+04	9.95E+04
Ba-137	6.90E-02		3.45E-05	6.89E-02	6.89E-02	1.70E+06	6.13E+03	1.68E+06	8.84E+04	9.45E+04
Np-237	6.99E-07		3.50E-10	6.99E-07	6.99E-07	3.30E+00	1.19E-02	3.26E+00	1.71E-01	1.83E-01
Pu-239	1.66E-04		8.28E-08	1.66E-04	1.66E-04	1.33E+03	4.80E+00	1.31E+03	6.92E+01	7.40E+01
Pu-240	4.33E-05		2.17E-08	4.33E-05	4.33E-05	3.31E+02	1.19E+00	3.26E+02	1.72E+01	1.84E+01
Pu-241	4.86E-04		2.43E-07	4.86E-04	4.86E-04	3.72E+03	1.34E+01	3.67E+03	1.93E+02	2.07E+02
Sr-90	1.86E-01		9.31E-05	1.86E-01	1.86E-01	2.68E+06	9.66E+03	2.65E+06	1.39E+05	1.49E+05
Y-90	1.86E-01		9.31E-05	1.86E-01	1.86E-01	2.68E+06	9.66E+03	2.65E+06	1.39E+05	1.49E+05
Tc-99	2.23E-03		1.12E-06	2.23E-03	2.23E-03	4.87E+02	1.75E+00	4.80E+02	2.53E+01	2.70E+01
Total Curies	5.18E-01		2.59E-04	5.17E-01	5.17E-01	8.87E+06	3.20E+04	8.75E+06	4.61E+05	4.93E+05
Chemicals (MT)										
Ag+										
Al+3										
Am+3										
As+5										
Ba+2										
Be+2										
Bi+3										
Ca+2										
Cd+2										
Ce+3										
Cm+3										
Co+3										
Cr+3										
Cs+										
Cu+2										
Fe+3										
Hg+2										
K+										
La+3										
Mg+2										
Mn+4										
Mo+6										
Na+										
Ni+3										
Np+4										
Pb+4										
Pu+4										
Rh+3										
Se+6										
Si+4										
Sr+2										
Th+4										
Ti+4										
UO2+2										
Zn+2										
Cl-	1.45E-05		7.24E-09	1.45E-05	1.45E-05	7.14E-01	2.57E-03	7.04E-01	3.71E-02	3.96E-02
CO3-2										
F-	1.03E-04		5.13E-08	1.03E-04	1.03E-04	3.99E+00	1.44E-02	3.93E+00	2.07E-01	2.21E-01
I-	2.29E-09		1.15E-12	2.29E-09	2.29E-09					
NO2-										
NO3-										
OH-										
PO4-3										
SO4-2										
TcO4-										
Cancrinite										
H2O										
MnO2	1.72E-06		8.59E-10	1.72E-06	1.72E-06	1.50E+01	5.40E-02	1.48E+01	7.78E-01	8.32E-01
Organic Carbon										
ZrO2:2H2O										
Ag2O	3.45E-08		1.73E-11	3.45E-08	3.45E-08	8.38E-02	3.02E-04	8.27E-02	4.35E-03	4.65E-03
AlPO4	5.84E-04		2.92E-07	5.83E-04	5.83E-04	3.49E+01	1.26E-01	3.44E+01	1.81E+00	1.94E+00
Al2O3	2.05E-03		1.03E-06	2.05E-03	2.05E-03	1.05E+02	3.77E-01	1.03E+02	5.43E+00	5.80E+00
Am2O3	2.55E-10		1.27E-13	2.55E-10	2.55E-10	1.63E-03	5.86E-06	1.61E-03	8.45E-05	9.04E-05
As2O5	6.26E-12		3.13E-15	6.25E-12	6.25E-12	1.83E-04	6.58E-07	1.80E-04	9.49E-06	1.02E-05
B2O3	1.10E-08		5.49E-12	1.10E-08	1.10E-08	8.94E+01	3.22E-01	8.82E+01	4.64E+00	4.96E+00
BaO	8.86E-08		4.43E-11	8.85E-08	8.85E-08	2.20E-01	7.93E-04	2.17E-01	1.14E-02	1.22E-02
BeO	6.81E-12		3.41E-15	6.81E-12	6.81E-12	4.49E-04	1.62E-06	4.43E-04	2.33E-05	2.49E-05
Bi2O3	1.32E-06		6.62E-10	1.32E-06	1.32E-06	1.48E+01	5.32E-02	1.46E+01	7.66E-01	8.20E-01
CaO	4.59E-03		2.30E-06	4.59E-03	4.59E-03	1.08E+01	3.87E-02	1.06E+01	5.58E-01	5.97E-01
CdO	8.62E-07		4.31E-10	8.62E-07	8.62E-07	3.97E-01	1.43E-03	3.92E-01	2.06E-02	2.20E-02
Ce2O3	2.80E-07		1.40E-10	2.79E-07	2.79E-07	1.45E+01	5.22E-02	1.43E+01	7.53E-01	8.05E-01
Cm2O3	1.06E-14		5.29E-18	1.06E-14	1.06E-14	1.01E-06	3.65E-09	1.00E-06	5.26E-08	5.63E-08
Co2O3	2.06E-10		1.03E-13	2.06E-10	2.06E-10	8.41E-07	3.03E-09	8.30E-07	4.37E-08	4.67E-08
Cr2O3	4.33E-05		2.16E-08	4.33E-05	4.33E-05	4.61E+00	1.66E-02	4.55E+00	2.39E-01	2.56E-01
Cs2O	4.44E-09		2.22E-12	4.43E-09	4.43E-09	1.11E-01	4.00E-04	1.10E-01	5.76E-03	6.16E-03
CuO	1.24E-08		6.21E-12	1.24E-08	1.24E-08	1.25E-02	4.48E-05	1.23E-02	6.46E-04	6.91E-04
Fe2O3	4.94E-06		2.47E-09	4.94E-06	4.94E-06	5.74E+01	2.07E-01	5.66E+01	2.98E+00	3.19E+00
FeO	1.54E-10		7.70E-14	1.54E-10	1.54E-10	5.46E-07	1.96E-09	5.38E-07	2.83E-08	3.03E-08
HgO	2.32E-09		1.16E-12	2.32E-09	2.32E-09					
K2O	8.51E-05		4.26E-08	8.51E-05	8.51E-05	2.36E+00	8.49E-03	2.32E+00	1.22E-01	1.31E-01
La2O3	2.82E-08		1.41E-11	2.82E-08	2.82E-08	1.42E+00	5.10E-03	1.40E+00	7.35E-02	7.86E-02
Li2O						2.56E+01	9.20E-02	2.52E+01	1.33E+00	1.42E+00
MgO	1.07E-10		5.36E-14	1.07E-10	1.07E-10	8.00E-01	2.88E-03	7.89E-01	4.15E-02	4.44E-02
MnO	6.28E-12		3.14E-15	6.28E-12	6.28E-12	2.23E-08	8.02E-11	2.20E-08	1.16E-09	1.24E-09
MoO3	1.09E-09		5.44E-13	1.09E-09	1.09E-09	2.54E-03	9.15E-06	2.51E-03	1.32E-04	1.41E-04
Na2O	1.15E-02		5.74E-06	1.15E-02	1.15E-02	1.53E+02	5.50E-01	1.51E+02	7.93E+00	8.48E+00

STREAM NAME	520	521	522	523	524	600	601	602	603	604
SOLID COMPONENTS										
Chemicals Continued (MT)										
Ni2O3	1.16E-06		5.81E-10	1.16E-06	1.16E-06	1.53E+01	5.51E-02	1.51E+01	7.94E-01	8.49E-01
NpO2	1.13E-09		5.63E-13	1.13E-09	1.13E-09	5.31E-03	1.91E-05	5.24E-03	2.76E-04	2.95E-04
PbO2	1.10E-06		5.48E-10	1.10E-06	1.10E-06	1.78E+00	6.42E-03	1.76E+00	9.26E-02	9.90E-02
PuO2	3.25E-09		1.63E-12	3.25E-09	3.25E-09	2.61E-02	9.38E-05	2.57E-02	1.35E-03	1.45E-03
Rb2O	2.63E-11		1.32E-14	2.63E-11	2.63E-11	9.34E-08	3.36E-10	9.21E-08	4.85E-09	5.18E-09
Re2O7	1.41E-11		7.06E-15	1.41E-11	1.41E-11	5.00E-08	1.80E-10	4.93E-08	2.60E-09	2.78E-09
Rh2O3	1.07E-10		5.33E-14	1.07E-10	1.07E-10	1.25E-02	4.50E-05	1.23E-02	6.49E-04	6.94E-04
Ru2O3	1.45E-10		7.24E-14	1.45E-10	1.45E-10	5.21E-07	1.88E-09	5.14E-07	2.71E-08	2.89E-08
SeO3	5.32E-11		2.66E-14	5.32E-11	5.32E-11	2.80E-01	1.01E-03	2.76E-01	1.46E-02	1.56E-02
SiO2	2.69E-02		1.35E-05	2.69E-02	2.69E-02	5.88E+02	2.12E+00	5.80E+02	3.05E+01	3.26E+01
SO3	1.63E-05		8.14E-09	1.63E-05	1.63E-05	9.53E-01	3.43E-03	9.40E-01	4.95E-02	5.29E-02
SrO	4.52E-08		2.26E-11	4.52E-08	4.52E-08	2.27E+00	8.16E-03	2.24E+00	1.18E-01	1.26E-01
Tc2O7	2.05E-07		1.03E-10	2.05E-07	2.05E-07	4.49E-02	1.62E-04	4.43E-02	2.33E-03	2.49E-03
TeO3	1.13E-10		5.63E-14	1.12E-10	1.12E-10	4.05E-07	1.46E-09	3.99E-07	2.10E-08	2.25E-08
ThO2	1.92E-11		9.61E-15	1.92E-11	1.92E-11	1.67E-01	6.02E-04	1.65E-01	8.68E-03	9.28E-03
TiO2	1.56E-12		7.81E-16	1.56E-12	1.56E-12	1.36E-02	4.89E-05	1.34E-02	7.05E-04	7.54E-04
UO3	1.13E-05		5.64E-09	1.13E-05	1.13E-05	8.61E+01	3.10E-01	8.49E+01	4.47E+00	4.78E+00
ZnO	1.01E-10		5.05E-14	1.01E-10	1.01E-10	3.32E-02	1.19E-04	3.27E-02	1.72E-03	1.84E-03
ZrO2	5.90E-07		2.95E-10	5.90E-07	5.90E-07	4.87E+01	1.75E-01	4.80E+01	2.53E+00	2.70E+00
Cement										
Cu										
CuSO4										
Dicyclopentadiene										
Flyash										
Oligomer										
Na Loaded Resin										
Sulfur										

STREAM NAME	605	606	607	608	609	610	611	612	613	614
LIQUID COMPONENTS										
Total Mass Flow (MT)	5.05E+03	3.13E+04	3.13E+04		7.26E+03	2.41E+04	1.00E-03	1.00E-03	1.41E+06	1.16E+02
Volume (L)	5.05E+06	3.13E+07	3.13E+07		7.26E+06	2.40E+07	7.18E-01	1.00E+00	1.41E+09	1.16E+05
Specific Gravity	1.00E+00	1.00E+00	1.00E+00		1.00E+00	1.00E+00	1.39E+00	1.00E+00	1.00E+00	1.00E+00
Radionuclides (Ci)										
Am-241										
C-14		2.57E+03	2.57E+03		2.57E+03					
Cs-137										
Ba-137										
Np-237										
Pu-239										
Pu-240										
Pu-241										
Sr-90										
Y-90										
Tc-99	2.33E+03	1.12E+04	1.12E+04		2.23E+02	1.09E+04			2.44E+05	
Total Curies	2.33E+03	1.37E+04	1.37E+04		2.79E+03	1.09E+04			2.44E+05	
Chemicals (MT)										
Ag+										
Au+3										
As+5										
B+3										
Ba+2										
Be+2										
Bi+3										
Ca+2										
Cd+2										
Ce+3										
Cm+3										
Co+3										
Cs+										
Cu+2										
Fe+2										
Fe+3										
H+	1.33E-01	6.38E-01	6.38E-01		1.28E-02	6.25E-01	9.05E-06		1.40E+01	
Hg+2										
K+										
La+3										
Mg+2										
Mn+2										
Mn+4										
Mo+6										
Na+										
Ni+3										
Np+4										
Pb+4										
Pu+4										
Rb+										
Re+7										
Rh+3										
Ru+3										
Se+6										
Si+4										
Sr+2										
Te+6										
UO2+2										
Zn+2										
Zr+4										
Al(OH)4-										
BO2-										
Cl-										
CO3-2										
Cr(OH)4-										
F-										
I-										
NO2-										
NO3-	6.43E+00	3.09E+01	3.09E+01		6.17E-01	3.03E+01	5.61E-04		6.74E+02	
OH-										
PO4-3										
SO4-2	1.09E+00	5.25E+00	5.25E+00		1.05E-01	5.15E+00			1.15E+02	
TcO4-	2.18E-01	1.04E+00	1.04E+00		2.09E-02	1.02E+00			2.36E+01	
H2O	5.05E+03	2.42E+04	2.42E+04		1.87E+02	2.40E+04	4.30E-04	1.00E-03	1.41E+06	1.16E+02
Organic Carbon										
ZrO2:2H2O										
Hg	3.87E-02	1.98E-01	1.98E-01		1.36E-02	1.84E-01			2.25E+00	
TcO2	6.23E-03	2.99E-02	2.99E-02		5.98E-04	2.93E-02				
Cl2		1.36E-02	1.36E-02		1.36E-02					
CO										
CO2		5.34E+03	5.34E+03		5.34E+03					
F2		7.60E-02	7.60E-02		7.60E-02					
H2										
I2		2.01E-03	2.01E-03		2.01E-03					
N2		1.84E+02	1.84E+02		1.84E+02					
N2O		1.71E+01	1.71E+01		1.71E+01					
NO		1.23E+03	1.23E+03		1.23E+03					
NO2		1.46E+02	1.46E+02		1.46E+02					
O2		1.49E+02	1.49E+02		1.49E+02					
SO2		1.16E+01	1.16E+01		1.16E+01					
Dicyclopentadiene										
Glycolic Anion										
H2S										
Glycolic Acid										
Kerosene										
NH3		3.66E+00	3.66E+00		3.66E+00					
Oligomer										
Sulfur										

STREAM NAME	605	606	607	608	609	610	611	612	613	614
SOLID COMPONENTS										
Total Mass Flow (MT)	1.22E+01	5.87E+01	5.87E+01		1.17E+00	5.75E+01			1.28E+03	
Radionuclides (Ci)										
Am-241	4.87E+01	2.34E+02	2.34E+02		4.67E+00	2.29E+02			5.10E+03	
C-14										
Cs-137	1.72E+04	8.23E+04	8.23E+04		1.65E+03	8.07E+04			1.80E+06	
Ba-137	1.63E+04	7.82E+04	7.82E+04		1.56E+03	7.67E+04			1.71E+06	
Np-237	3.16E-02	1.52E-01	1.52E-01		3.03E-03	1.49E-01			3.31E+00	
Pu-239	1.28E+01	6.12E+01	6.12E+01		1.22E+00	6.00E+01			1.34E+03	
Pu-240	3.17E+00	1.52E+01	1.52E+01		3.04E-01	1.49E+01			3.32E+02	
Pu-241	3.56E+01	1.71E+02	1.71E+02		3.42E+00	1.68E+02			3.74E+03	
Sr-90	2.57E+04	1.23E+05	1.23E+05		2.47E+03	1.21E+05			2.69E+06	
Y-90	2.57E+04	1.23E+05	1.23E+05		2.47E+03	1.21E+05			2.69E+06	
Tc-99	4.66E+00	2.24E+01	2.24E+01		4.48E-01	2.19E+01			4.89E+02	
Total Curies	8.49E+04	4.08E+05	4.08E+05		8.15E+03	3.99E+05			8.91E+06	
Chemicals (MT)										
Ag+										
Al+3										
Am+3										
As+5										
Ba+2										
Be+2										
Bi+3										
Ca+2										
Cd+2										
Ce+3										
Cm+3										
Co+3										
Cr+3										
Cs+										
Cu+2										
Fe+3										
Hg+2										
K+										
La+3										
Mg+2										
Mn+4										
Mo+6										
Na+										
Ni+3										
Np+4										
Pb+4										
Pu+4										
Rh+3										
Se+6										
Si+4										
Sr+2										
Th+4										
Ti+4										
UO2+2										
Zn+2										
Cl-	6.84E-03	3.28E-02	3.28E-02		6.56E-04	3.22E-02			7.17E-01	
CO3-2										
F-	3.82E-02	1.83E-01	1.83E-01		3.67E-03	1.80E-01			4.00E+00	
I-										
NO2-										
NO3-										
OH-										
PO4-3										
SO4-2										
TcO4-										
Cancrinite										
H2O										
MnO2	1.44E-01	6.89E-01	6.89E-01		1.38E-02	6.75E-01			1.51E+01	
Organic Carbon										
ZrO2:2H2O										
Ag2O	8.02E-04	3.85E-03	3.85E-03		7.70E-05	3.77E-03			8.41E-02	
AlPO4	3.34E-01	1.60E+00	1.60E+00		3.21E-02	1.57E+00			3.50E+01	
Al2O3	1.00E+00	4.80E+00	4.80E+00		9.61E-02	4.71E+00			1.05E+02	
Am2O3	1.56E-05	7.48E-05	7.48E-05		1.50E-06	7.33E-05			1.63E-03	
As2O5	1.75E-06	8.40E-06	8.40E-06		1.68E-07	8.23E-06			1.83E-04	
B2O3	8.56E-01	4.11E+00	4.11E+00		8.22E-02	4.03E+00			8.98E+01	
BaO	2.11E-03	1.01E-02	1.01E-02		2.02E-04	9.91E-03			2.21E-01	
BeO	4.30E-06	2.06E-05	2.06E-05		4.13E-07	2.02E-05			4.51E-04	
Bi2O3	1.41E-01	6.78E-01	6.78E-01		1.36E-02	6.65E-01			1.48E+01	
CaO	1.03E-01	4.94E-01	4.94E-01		9.88E-03	4.84E-01			1.08E+01	
CdO	3.80E-03	1.82E-02	1.82E-02		3.65E-04	1.79E-02			3.99E-01	
Ce2O3	1.39E-01	6.66E-01	6.66E-01		1.33E-02	6.53E-01			1.46E+01	
Cm2O3	9.70E-09	4.66E-08	4.66E-08		9.31E-10	4.56E-08			1.02E-06	
Co2O3	8.05E-09	3.86E-08	3.86E-08		7.73E-10	3.79E-08			8.44E-07	
Cr2O3	4.41E-02	2.12E-01	2.12E-01		4.23E-03	2.08E-01			4.63E+00	
Cs2O	1.06E-03	5.10E-03	5.10E-03		1.02E-04	5.00E-03			1.12E-01	
CuO	1.19E-04	5.72E-04	5.72E-04		1.14E-05	5.61E-04			1.25E-02	
Fe2O3	5.49E-01	2.64E+00	2.64E+00		5.27E-02	2.58E+00			5.76E+01	
FeO	5.22E-09	2.51E-08	2.51E-08		5.01E-10	2.46E-08			5.48E-07	
HgO										
K2O	2.26E-02	1.08E-01	1.08E-01		2.17E-03	1.06E-01			2.37E+00	
La2O3	1.36E-02	6.51E-02	6.51E-02		1.30E-03	6.38E-02			1.42E+00	
Li2O	2.45E-01	1.17E+00	1.17E+00		2.35E-02	1.15E+00			2.57E+01	
MgO	7.66E-03	3.67E-02	3.67E-02		7.35E-04	3.60E-02			8.03E-01	
MnO	2.13E-10	1.02E-09	1.02E-09		2.05E-11	1.00E-09			2.23E-08	
MoO3	2.43E-05	1.17E-04	1.17E-04		2.34E-06	1.14E-04			2.55E-03	
Na2O	1.46E+00	7.01E+00	7.01E+00		1.40E-01	6.87E+00			1.53E+02	

STREAM NAME	605	606	607	608	609	610	611	612	613	614
SOLID COMPONENTS										
Chemicals Continued (MT)										
Ni2O3	1.46E-01	7.03E-01	7.03E-01		1.41E-02	6.89E-01			1.54E+01	
NpO2	5.09E-05	2.44E-04	2.44E-04		4.88E-06	2.39E-04			5.33E-03	
PbO2	1.71E-02	8.20E-02	8.20E-02		1.64E-03	8.03E-02			1.79E+00	
PuO2	2.49E-04	1.20E-03	1.20E-03		2.39E-05	1.17E-03			2.62E-02	
Rb2O	8.94E-10	4.29E-09	4.29E-09		8.58E-11	4.20E-09			9.37E-08	
Re2O7	4.79E-10	2.30E-09	2.30E-09		4.60E-11	2.25E-09			5.02E-08	
Rh2O3	1.20E-04	5.75E-04	5.75E-04		1.15E-05	5.63E-04			1.26E-02	
Ru2O3	4.99E-09	2.39E-08	2.39E-08		4.79E-10	2.35E-08			5.23E-07	
SeO3	2.68E-03	1.29E-02	1.29E-02		2.58E-04	1.26E-02			2.81E-01	
SiO2	5.63E+00	2.70E+01	2.70E+01		5.40E-01	2.65E+01			5.90E+02	
SO3	9.12E-03	4.38E-02	4.38E-02		8.75E-04	4.29E-02			9.56E-01	
SrO	2.17E-02	1.04E-01	1.04E-01		2.08E-03	1.02E-01			2.27E+00	
Tc2O7	4.29E-04	2.06E-03	2.06E-03		4.12E-05	2.02E-03			4.50E-02	
TeO3	3.87E-09	1.86E-08	1.86E-08		3.72E-10	1.82E-08			4.06E-07	
ThO2	1.60E-03	7.68E-03	7.68E-03		1.54E-04	7.52E-03			1.68E-01	
TiO2	1.30E-04	6.24E-04	6.24E-04		1.25E-05	6.11E-04			1.36E-02	
UO3	8.24E-01	3.96E+00	3.96E+00		7.91E-02	3.88E+00			8.64E+01	
ZnO	3.18E-04	1.52E-03	1.52E-03		3.05E-05	1.49E-03			3.33E-02	
ZrO2	4.66E-01	2.24E+00	2.24E+00		4.47E-02	2.19E+00			4.89E+01	
Cement										
Cu										
CuSO4										
Dicyclopentadiene										
Flyash										
Oligomer										
Na Loaded Resin										
Sulfur										

STREAM NAME	615	616	617	618	619	620	621	622	623	624
LIQUID COMPONENTS										
Total Mass Flow (MT)	7.26E+03	1.16E+02	1.18E+02	1.05E+07	1.16E+06	1.00E+07	1.81E+05	1.34E+06	1.76E+05	1.16E+06
Volume (L)	7.26E+06	1.16E+05	1.18E+05	1.00E+10	1.13E+09	9.49E+09	1.72E+08	1.30E+09	1.70E+08	1.13E+09
Specific Gravity	1.00E+00	1.00E+00	1.00E+00	1.05E+00	1.02E+00	1.06E+00	1.05E+00	1.03E+00	1.04E+00	1.03E+00
Radionuclides (Ci)										
Am-241										
C-14	2.57E+03				3.84E+03			3.84E+03		3.84E+03
Cs-137				9.16E+06	4.77E+05	9.06E+06	1.57E+05	6.34E+05	1.02E+05	5.32E+05
Ba-137				8.71E+06	4.53E+05	8.61E+06	1.50E+05	6.03E+05	9.72E+04	5.05E+05
Np-237										
Pu-239										
Pu-240										
Pu-241										
Sr-90										
Y-90										
Tc-99	2.23E+02			5.41E+05	2.82E+04	5.35E+05	9.29E+03	3.74E+04	6.04E+03	3.14E+04
Total Curies	2.79E+03			1.84E+07	9.62E+05	1.82E+07	3.16E+05	1.28E+06	2.06E+05	1.07E+06
Chemicals (MT)										
Ag+										
Am+3										
As+5										
B+3										
Ba+2										
Be+2										
Bi+3										
Ca+2										
Cd+2				9.53E+01	4.96E+00	9.42E+01	1.64E+00	6.59E+00	1.06E+00	5.53E+00
Ce+3										
Cm+3										
Co+3										
Cs+				5.28E-01	2.75E-02	5.22E-01	9.07E-03	3.66E-02	5.90E-03	3.07E-02
Cu+2										
Fe+2										
Fe+3										
H+	1.28E-02			1.51E+04	7.66E+02	1.46E+04	2.60E+02	1.03E+03	1.65E+02	8.60E+02
Hg+2										
K+				1.80E+02	9.39E+00	1.78E+02	3.10E+00	1.25E+01	2.01E+00	1.05E+01
La+3										
Mg+2										
Mn+2										
Mn+4										
Mo+6				9.64E-03	5.02E-04	9.54E-03	1.66E-04	6.67E-04	1.08E-04	5.60E-04
Na+				2.18E+04	1.13E+03	2.15E+04	3.74E+02	1.51E+03	2.43E+02	1.26E+03
Ni+3										
Np+4										
Pb+4				1.20E+02	6.24E+00	1.19E+02	2.06E+00	8.30E+00	1.34E+00	6.96E+00
Pu+4										
Rb+										
Re+7										
Rh+3										
Ru+3				1.48E-02	7.69E-04	1.46E-02	2.54E-04	1.02E-03	1.65E-04	8.58E-04
Se+6				4.18E-03	2.17E-04	4.13E-03	7.17E-05	2.89E-04	4.66E-05	2.42E-04
Si+4										
Sr+2										
Te+6				1.03E-02	5.37E-04	1.02E-02	1.77E-04	7.14E-04	1.15E-04	5.99E-04
UO2+2										
Zn+2										
Zr+4										
Al(OH)4-										
HO2-				1.14E+00	5.92E-02	1.13E+00	1.95E-02	7.87E-02	1.27E-02	6.60E-02
Cl-				6.96E+04	3.62E+03	6.88E+04	1.20E+03	4.82E+03	7.77E+02	4.04E+03
CO3-2										
Cr(OH)4-										
F-				5.17E+04	2.69E+03	5.12E+04	8.89E+02	3.58E+03	5.77E+02	3.00E+03
I-				5.74E+01	2.99E+00	5.68E+01	9.86E-01	3.97E+00	6.41E-01	3.33E+00
NO2-										
NO3-	6.17E-01			6.48E+05	3.24E+04	6.15E+05	1.11E+04	4.35E+04	7.02E+03	3.65E+04
OH-										
PO4-3				2.87E+04	1.50E+03	2.84E+04	4.93E+02	1.99E+03	3.21E+02	1.67E+03
SO4-2	1.05E-01									
TcO4-	2.09E-02			5.24E+01	2.62E+00	4.98E+01	9.00E-01	3.52E+00	5.68E-01	2.95E+00
H2O	1.87E+02	1.16E+02	1.18E+02	9.71E+06	8.67E+05	9.21E+06	1.67E+05	1.03E+06	1.67E+05	8.67E+05
Organic Carbon										
ZrO2:2H2O										
Hg	1.36E-02			5.52E+01	2.87E+00	5.45E+01	9.48E-01	3.82E+00	3.63E+00	1.91E-01
TcO2	5.98E-04				8.59E-02	1.63E+00		8.59E-02	1.39E-02	7.21E-02
Cl2	1.36E-02									
CO					2.38E+03			2.38E+03		2.38E+03
CO2	5.34E+03				1.91E+05			1.91E+05		1.91E+05
F2	7.60E-02									
H2										
I2	2.01E-03									
N2	1.84E+02				4.14E+04			4.14E+04		4.14E+04
N2O	1.71E+01									
NO	1.23E+03				2.46E+02			2.46E+02		2.46E+02
NO2	1.46E+02				1.51E+03			1.51E+03		1.51E+03
O2	1.49E+02				1.20E+04			1.20E+04		1.20E+04
SO2	1.16E+01				1.21E+03			1.21E+03		1.21E+03
Dicyclopentadiene										
Glycolic Anion										
H2S										
Glycolic Acid										
Kerosene										
NB3	3.66E+00									
Oligomer										
Sulfur										

STREAM NAME	615	616	617	618	619	620	621	622	623	624
SOLID COMPONENTS										
Total Mass Flow (MT)	5.87E-04	1.17E+00	1.19E+00	2.32E+05	1.21E+04	2.30E+05	3.99E+03	1.61E+04	2.59E+03	1.35E+04
Radionuclides (Ci)										
Am-241	2.34E-03	4.67E+00	4.72E+00	4.02E+03	2.09E+02	3.97E+03	6.90E+01	2.78E+02	4.49E+01	2.33E+02
C-14			1.09E-03							
Cs-137	8.23E-01	1.65E+03	1.65E+03	3.67E+05	1.91E+04	3.63E+05	6.31E+03	2.54E+04	4.10E+03	2.13E+04
Ba-137	7.82E-01	1.56E+03	1.57E+03	3.49E+05	1.82E+04	3.45E+05	5.99E+03	2.41E+04	3.89E+03	2.03E+04
Np-237	1.52E-06	3.03E-03	3.06E-03	3.54E+00	1.84E-01	3.50E+00	6.07E-02	2.45E-01	3.95E-02	2.05E-01
Pu-239	6.12E-04	1.22E+00	1.24E+00	8.38E+02	4.36E+01	8.28E+02	1.44E+01	5.80E+01	9.35E+00	4.86E+01
Pu-240	1.52E-04	3.04E-01	3.07E-01	2.19E+02	1.14E+01	2.17E+02	3.76E+00	1.52E+01	2.45E+00	1.27E+01
Pu-241	1.71E-03	3.42E+00	3.46E+00	2.46E+03	1.28E+02	2.43E+03	4.22E+01	1.70E+02	2.74E+01	1.43E+02
Sr-90	1.23E+00	2.46E+03	2.49E+03	9.42E+05	4.90E+04	9.31E+05	1.62E+04	6.52E+04	1.05E+04	5.47E+04
Y-90	1.23E+00	2.46E+03	2.49E+03	9.42E+05	4.90E+04	9.31E+05	1.62E+04	6.52E+04	1.05E+04	5.47E+04
Tc-99	2.24E-04	4.47E-01	4.52E-01	1.13E+04	5.87E+02	1.12E+04	1.94E+02	7.80E+02	1.26E+02	6.55E+02
Total Curies	4.08E+00	8.15E+03	8.21E+03	2.62E+06	1.36E+05	2.59E+06	4.50E+04	1.81E+05	2.92E+04	1.52E+05
Chemicals (MT)										
Ag+			7.40E-07							
Al+3			3.73E-04							
Am+3			1.41E-08							
As+5			1.13E-09							
Ba+2			1.87E-06							
Be+2			1.54E-09							
Bi+3			1.26E-04							
Ca+2			7.24E-05							
Cd+2			3.28E-06							
Ce+3			1.18E-04							
Cm+3			8.78E-12							
Co+3			7.43E-13							
Cr+3			2.89E-05							
Cs+			1.00E-07							
Cu+2			9.42E-08							
Fe+3			3.81E-04							
Hg+2			4.41E-08							
K+			1.48E-05							
La+3			1.15E-05							
Mg+2			4.13E-06							
Mn+4			9.00E-05							
Mo+6			1.61E-08							
Na+			2.92E-04							
Ni+3			1.03E-04							
Np+4			4.44E-08							
Pb+4			1.47E-05							
Pu+4			2.18E-07							
Rh+3			9.63E-08							
Se+6			1.66E-06							
Si+4			1.16E-04							
Sr+2			1.83E-05							
Th+4			1.40E-06							
Ti+4			7.73E-08							
UO2+2			7.72E-04							
Zn+2			2.53E-07							
Cl-	3.28E-07	6.56E-04	6.61E-04	7.32E+01	3.81E+00	7.24E+01	1.26E+00	5.07E+00	8.17E-01	4.25E+00
CO3-2			5.45E-05							
F-	1.83E-06	3.66E-03	3.70E-03	5.19E+02	2.70E+01	5.13E+02	8.91E+00	3.59E+01	5.79E+00	3.01E+01
I-			6.98E-10	1.16E-02	6.04E-04	1.15E-02	1.99E-04	8.03E-04	1.29E-04	6.73E-04
NO2-			3.09E-05							
NO3-			4.93E-04							
OH-			1.30E-03							
PO4-3			2.43E-04							
SO4-2			1.28E-05							
TcO4-			4.54E-07							
Cancrinite			1.35E-03							
H2O										
MnO2	6.89E-06	1.38E-02	1.38E-02	8.68E+00	4.52E-01	8.59E+00	1.49E-01	6.01E-01	9.69E-02	5.04E-01
Organic Carbon			4.36E-05							
ZrO2:2H2O			5.98E-04							
Ag2O	3.85E-08	7.70E-05	7.70E-05	1.75E-01	9.08E-03	1.73E-01	3.00E-03	1.21E-02	1.95E-03	1.01E-02
AlPO4	1.60E-05	3.21E-02	3.21E-02	2.95E+03	1.54E+02	2.92E+03	5.07E+01	2.04E+02	3.29E+01	1.71E+02
Al2O3	4.80E-05	9.60E-02	9.61E-02	1.04E+04	5.40E+02	1.03E+04	1.78E+02	7.19E+02	1.16E+02	6.03E+02
Am2O3	7.48E-10	1.50E-06	1.50E-06	1.29E-03	6.70E-05	1.27E-03	2.21E-05	8.91E-05	1.44E-05	7.48E-05
As2O5	8.40E-11	1.68E-07	1.68E-07	3.16E-05	1.65E-06	3.13E-05	5.43E-07	2.19E-06	3.53E-07	1.84E-06
B2O3	4.11E-05	8.21E-02	8.30E-02	5.55E-02	2.89E-03	5.49E-02	9.53E-04	3.84E-03	6.19E-04	3.22E-03
BaO	1.01E-07	2.02E-04	2.02E-04	4.48E-01	2.33E-02	4.43E-01	7.69E-03	3.10E-02	5.00E-03	2.60E-02
BeO	2.06E-10	4.13E-07	4.13E-07	3.45E-05	1.79E-06	3.41E-05	5.92E-07	2.38E-06	3.85E-07	2.00E-06
Bi2O3	6.78E-06	1.36E-02	1.36E-02	6.69E+00	3.48E-01	6.62E+00	1.15E-01	4.63E-01	7.47E-02	3.88E-01
CaO	4.94E-06	9.87E-03	9.88E-03	2.32E+04	1.21E+03	2.30E+04	3.99E+02	1.61E+03	2.59E+02	1.35E+03
CdO	1.82E-07	3.65E-04	3.65E-04	4.36E+00	2.27E-01	4.31E+00	7.49E-02	3.02E-01	4.87E-02	2.53E-01
Ce2O3	6.66E-06	1.33E-02	1.33E-02	1.41E+00	7.36E-02	1.40E+00	2.43E-02	9.78E-02	1.58E-02	8.21E-02
Cm2O3	4.66E-13	9.31E-10	9.31E-10	5.35E-08	2.79E-09	5.29E-08	9.19E-10	3.70E-09	5.97E-10	3.11E-09
Co2O3	3.86E-13	7.72E-10	7.73E-10	1.04E-03	5.43E-05	1.03E-03	1.79E-05	7.22E-05	1.16E-05	6.05E-05
Cr2O3	2.12E-06	4.23E-03	4.23E-03	2.19E+02	1.14E+01	2.17E+02	3.76E+00	1.52E+01	2.44E+00	1.27E+01
Cs2O	5.10E-08	1.02E-04	1.02E-04	2.24E-02	1.17E-03	2.22E-02	3.85E-04	1.55E-03	2.50E-04	1.30E-03
CuO	5.72E-09	1.14E-05	1.14E-05	6.28E-02	3.27E-03	6.21E-02	1.08E-03	4.35E-03	7.01E-04	3.65E-03
Fe2O3	2.64E-05	5.27E-02	5.27E-02	2.50E+01	1.30E+00	2.47E+01	4.29E-01	1.73E+00	2.79E-01	1.45E+00
FeO	2.51E-13	5.01E-10	5.01E-10	7.78E-04	4.05E-05	7.70E-04	1.34E-05	5.39E-05	8.69E-06	4.52E-05
HgO				1.18E-02	6.11E-04	1.16E-02	2.02E-04	8.13E-04	1.31E-04	6.82E-04
K2O	1.08E-06	2.16E-03	2.17E-03	4.30E+02	2.24E+01	4.26E+02	7.39E+00	2.98E+01	4.80E+00	2.50E+01
La2O3	6.51E-07	1.30E-03	1.30E-03	1.43E-01	7.43E-03	1.41E-01	2.45E-03	9.89E-03	1.59E-03	8.29E-03
Li2O	1.17E-05	2.35E-02	2.37E-02							
MgO	3.67E-07	7.34E-04	7.36E-04	5.42E-04	2.82E-05	5.36E-04	9.30E-06	3.75E-05	6.05E-06	3.14E-05
MnO	1.02E-14	2.04E-11	2.05E-11	3.18E-05	1.65E-06	3.14E-05	5.45E-07	2.20E-06	3.54E-07	1.84E-06
MoO3	1.17E-09	2.33E-06	2.34E-06	5.50E-03	2.86E-04	5.44E-03	9.44E-05	3.81E-04	6.14E-05	3.19E-04
Na2O	7.01E-05	1.40E-01	1.40E-01	5.81E+04	3.02E+03	5.74E+04	9.97E+02	4.02E+03	6.48E+02	3.37E+03

STREAM NAME	615	616	617	618	619	620	621	622	623	624
SOLID COMPONENTS										
Chemicals Continued (MT)										
Nd_2O_3	7.03E-06	1.41E-02	1.41E-02	5.88E+00	3.06E-01	5.81E+00	1.01E-01	4.07E-01	6.56E-02	3.41E-01
NpO_2	2.44E-09	4.88E-06	4.88E-06	5.69E-03	2.96E-04	5.63E-03	9.78E-05	3.94E-04	6.35E-05	3.31E-04
HfO_2	8.20E-07	1.64E-03	1.64E-03	5.54E+00	2.89E-01	5.48E+00	9.52E-02	3.84E-01	6.19E-02	3.22E-01
PuO_2	1.20E-08	2.39E-05	2.39E-05	1.64E-02	8.56E-04	1.63E-02	2.82E-04	1.14E-03	1.84E-04	9.55E-04
Rb_2O	4.29E-14	8.57E-11	8.58E-11	1.33E-04	6.93E-06	1.32E-04	2.29E-06	9.22E-06	1.49E-06	7.73E-06
Re_2O_7	2.30E-14	4.59E-11	4.60E-11	7.14E-05	3.71E-06	7.06E-05	1.23E-06	4.94E-06	7.97E-07	4.14E-06
Rh_2O_3	5.75E-09	1.15E-05	1.15E-05	5.39E-04	2.81E-05	5.33E-04	9.26E-06	3.73E-05	6.02E-06	3.13E-05
Ru_2O_3	2.39E-13	4.79E-10	4.79E-10	7.33E-04	3.81E-05	7.25E-04	1.26E-05	5.07E-05	8.18E-06	4.25E-05
SeO_3	1.29E-07	2.57E-04	2.58E-04	2.69E-04	1.40E-05	2.66E-04	4.62E-06	1.86E-05	3.00E-06	1.56E-05
SiO_2	2.70E-04	5.40E-01	5.45E-01	1.36E+05	7.09E+03	1.35E+05	2.34E+03	9.43E+03	1.52E+03	7.91E+03
SO_3	4.38E-07	8.75E-04	8.75E-04	8.23E+01	4.29E+00	8.14E+01	1.41E+00	5.70E+00	9.19E-01	4.78E+00
SnO	1.04E-06	2.08E-03	2.08E-03	2.29E-01	1.19E-02	2.26E-01	3.93E-03	1.58E-02	2.55E-03	1.33E-02
Tc_2O_7	2.06E-08	4.12E-05	4.12E-05	1.04E+00	5.40E-02	1.03E+00	1.78E-02	7.19E-02	1.16E-02	6.03E-02
TeO_3	1.86E-13	3.72E-10	3.72E-10	5.69E-04	2.96E-05	5.63E-04	9.77E-06	3.94E-05	6.35E-06	3.30E-05
ThO_2	7.68E-08	1.54E-04	1.54E-04	9.72E-05	5.06E-06	9.61E-05	1.67E-06	6.73E-06	1.09E-06	5.64E-06
TiO_2	6.24E-09	1.25E-05	1.25E-05	7.90E-06	4.11E-07	7.81E-06	1.36E-07	5.47E-07	8.81E-08	4.58E-07
UO_3	3.96E-05	7.91E-02	7.91E-02	5.70E+01	2.97E+00	5.64E+01	9.79E-01	3.95E+00	6.36E-01	3.31E+00
ZnO	1.52E-08	3.05E-05	3.05E-05	5.10E-04	2.66E-05	5.05E-04	8.77E-06	3.53E-05	5.70E-06	2.96E-05
ZrO_2	2.24E-05	4.47E-02	4.47E-02	2.99E+00	1.55E-01	2.95E+00	5.13E-02	2.07E-01	3.33E-02	1.73E-01
Cement										
Cu										
$CuSO_4$										
Dicyclopentadiene										
Flyash										
Oligomer										
Na Loaded Resin										
Sulfur										

STREAM NAME	625	626	627	628	629	630	631	632	633	634
LIQUID COMPONENTS										
Total Mass Flow (MT)	1.16E+06		2.57E+05	9.07E+05	4.71E+04	4.18E+05	1.07E+07	5.21E+04	2.67E+04	2.57E+05
Volume (L)	1.13E+09		2.57E+08	8.77E+08	3.38E+07	3.96E+08	1.02E+10	5.21E+07	2.67E+07	2.57E+08
Specific Gravity	1.03E+00		1.00E+00	1.04E+00	1.39E+00	1.05E+00	1.05E+00	1.00E+00	1.00E+00	1.00E+00
Radionuclides (Ci)										
Am-241										
C-14	3.84E+03		3.84E+03							3.84E+03
Cs-137	5.32E+05		1.06E+04	5.21E+05		3.63E+05	9.32E+06			1.06E+04
Ba-137	5.05E+05		1.01E+04	4.95E+05		3.45E+05	8.86E+06			1.01E+04
Np-237										
Pu-239										
Pu-240										
Pu-241										
Sr-90										
Y-90										
Tc-99	3.14E+04		6.28E+02	3.08E+04		2.14E+04	5.50E+05	9.03E+03		6.28E+02
Total Curies	1.07E+06		2.52E+04	1.05E+06		7.30E+05	1.87E+07	9.03E+03		2.52E+04
Chemicals (MT)										
Ag+										
Am+3										
As+5										
B+3										
Ba+2										
Be+2										
Bi+3										
Ca+2										
Cd+2	5.53E+00		1.11E-01	5.42E+00		3.78E+00	9.69E+01			1.11E-01
Ce+3										
Cm+3										
Co+3										
Cs+	3.07E-02		6.14E-04	3.01E-02		2.09E-02	5.37E-01			6.14E-04
Cu+2										
Fe+2										
Fe+3										
H+	8.60E+02		1.72E+01	8.43E+02	4.26E+02	6.00E+02	1.54E+04	5.17E-01		1.72E+01
Hg+2										
K+	1.05E+01		2.10E-01	1.03E+01		7.15E+00	1.84E+02			2.10E-01
La+3										
Mg+2										
Mn+2										
Mn+4										
Mo+6	5.60E-04		1.12E-05	5.49E-04		3.82E-04	9.81E-03			1.12E-05
Na+	1.26E+03		2.53E+01	1.24E+03		8.63E+02	2.21E+04			2.53E+01
Ni+3										
Np+4										
Pb+4	6.96E+00		1.39E-01	6.82E+00		4.75E+00	1.22E+02			1.39E-01
Pu+4										
Rb+										
Re+7										-
Rh+3										
Ru+3	8.58E-04		1.72E-05	8.41E-04		5.86E-04	1.50E-02			1.72E-05
Se+6	2.42E-04		4.85E-06	2.38E-04		1.66E-04	4.25E-03			4.85E-06
Si+4										
Sr+2										
Te+6	5.99E-04		1.20E-05	5.87E-04		4.09E-04	1.05E-02			1.20E-05
UO2+2										
Zn+2										
Zr+4										
Al(OH)4-										
BO2-	6.60E-02		1.32E-03	6.47E-02		4.51E-02	1.16E+00			1.32E-03
Cl-	4.04E+03		8.08E+01	3.96E+03		2.76E+03	7.08E+04			8.08E+01
CO3-2										
Cr(OH)4-										
F-	3.00E+03		6.01E+01	2.94E+03		2.05E+03	5.26E+04			6.01E+01
I-	3.33E+00		6.67E-02	3.27E+00		2.28E+00	5.84E+01			6.67E-02
NO2-										
NO3-	3.65E+04		7.30E+02	3.58E+04	2.64E+04	2.57E+04	6.59E+05	2.50E+01		7.30E+02
OH-										
PO4-3	1.67E+03		3.34E+01	1.63E+03		1.14E+03	2.92E+04			3.34E+01
SO4-2								4.25E+00		
TcO4-	2.95E+00		5.90E-02	2.89E+00		2.08E+00	5.33E+01	8.75E-01		5.90E-02
H2O	8.67E+05		6.61E+03	8.61E+05	2.03E+04	3.85E+05	9.87E+06	5.21E+04	2.67E+04	6.61E+03
Organic Carbon										
ZrO2:2H2O										
Hg	1.91E-01		9.54E-03	1.81E-01		2.19E+00	5.61E+01	8.34E-02		9.54E-03
TcO2	7.21E-02		1.44E-03	7.06E-02						1.44E-03
Cl2										
CO	2.38E+03		2.38E+03							2.38E+03
CO2	1.91E+05		1.91E+05							1.91E+05
F2										
H2										
I2										
N2	4.14E+04		4.14E+04							4.14E+04
N2O										
NO	2.46E+02		2.46E+02							2.46E+02
NO2	1.51E+03		1.51E+03							1.51E+03
O2	1.20E+04		1.20E+04							1.20E+04
SO2	1.21E+03		1.21E+03							1.21E+03
Dicyclopentadiene										
Glycolic Anion										
H2S										
Glycolic Acid										
Kerosene										
NH3										
Oligomer										
Sulfur										

STREAM NAME	625	626	627	628	629	630	631	632	633	634
SOLID COMPONENTS										
Total Mass Flow (MT)	1.35E+04		2.70E+02	1.32E+04		9.21E+03	2.36E+05	4.75E+01		1.35E-01
Radionuclides (Ci)										
Am-241	2.33E+02		4.67E+00	2.29E+02		1.59E+02	4.09E+03	1.89E+02		2.33E-03
C-14										
Cs-137	2.13E+04		4.26E+02	2.09E+04		1.46E+04	3.73E+05	6.66E+04		2.13E-01
Ba-137	2.03E+04		4.05E+02	1.98E+04		1.38E+04	3.55E+05	6.33E+04		2.03E-01
Np-237	2.05E-01		4.11E-03	2.01E-01		1.40E-01	3.60E+00	1.23E-01		2.05E-06
Pu-239	4.86E+01		9.73E-01	4.77E+01		3.32E+01	8.52E+02	4.95E+01		4.86E-04
Pu-240	1.27E+01		2.54E-01	1.25E+01		8.68E+00	2.23E+02	1.23E+01		1.27E-04
Pu-241	1.43E+02		2.85E+00	1.40E+02		9.74E+01	2.50E+03	1.38E+02		1.43E-03
Sr-90	5.47E+04		1.09E+03	5.36E+04		3.73E+04	9.58E+05	9.97E+04		5.47E-01
Y-90	5.47E+04		1.09E+03	5.36E+04		3.73E+04	9.58E+05	9.97E+04		5.47E-01
Tc-99	6.55E+02		1.31E+01	6.42E+02		4.47E+02	1.15E+04	1.81E+01		6.55E-03
Total Curies	1.52E+05		3.04E+03	1.49E+05		1.04E+05	2.66E+06	3.30E+05		1.52E+00
Chemicals (MT)										
Ag+										
Al+3										
Am+3										
As+5										
Ba+2										
Be+2										
Bi+3										
Ca+2										
Cd+2										
Ce+3										
Cm+3										
Co+3										
Cr+3										
Cs+										
Cu+2										
Fe+3										
Hg+2										
K+										
La+3										
Mg+2										
Mn+4										
Mo+6										
Na+										
Ni+3										
Np+4										
Pb+4										
Pu+4										
Rh+3										
Se+6										
Si+4										
Sr+2										
Th+4										
Ti+4										
UO2+2										
Zr+2										
Cl-	4.25E+00		8.50E-02	4.17E+00		2.90E+00	7.45E+01	2.65E-02		4.25E-05
CO3-2										
F-	3.01E+01		6.03E-01	2.95E+01		2.06E+01	5.28E+02	1.48E-01		3.01E-04
I-	6.73E-04		1.35E-05	6.60E-04		4.60E-04	1.18E-02			6.73E-09
NO2-										
NO3-										
OH-										
PO4-3										
SO4-2										
TcO4-										
Cancrinite										
H2O										
MnO2	5.04E-01		1.01E-02	4.94E-01		3.44E-01	8.83E+00	5.57E-01		5.04E-06
Organic Carbon										
ZrO2:2H2O										
Ag2O	1.01E-02		2.03E-04	9.93E-03		6.92E-03	1.78E-01	3.12E-03		1.01E-07
AlPO4	1.71E+02		3.43E+00	1.68E+02		1.17E+02	3.00E+03	1.30E+00		1.71E-03
Al2O3	6.03E+02		1.21E+01	5.91E+02		4.12E+02	1.06E+04	3.89E+00		6.03E-03
Am2O3	7.48E-05		1.50E-06	7.33E-05		5.10E-05	1.31E-03	6.05E-05		7.48E-10
As2O5	1.84E-06		3.67E-08	1.80E-06		1.25E-06	3.22E-05	6.79E-06		1.84E-11
B2O3	3.22E-03		6.44E-05	3.16E-03		2.20E-03	5.64E-02	3.32E+00		3.22E-08
BaO	2.60E-02		5.20E-04	2.55E-02		1.78E-02	4.56E-01	8.18E-03		2.60E-07
BeO	2.00E-06		4.00E-08	1.96E-06		1.37E-06	3.50E-05	1.67E-05		2.00E-11
Bi2O3	3.88E-01		7.77E-03	3.81E-01		2.65E-01	6.81E+00	5.49E-01		3.88E-06
CaO	1.35E+03		2.70E+01	1.32E+03		9.21E+02	2.36E+04	3.99E-01		1.35E-02
CdO	2.53E-01		5.06E-03	2.48E-01		1.73E-01	4.43E+00	1.48E-02		2.53E-06
Ce2O3	8.21E-02		1.64E-03	8.04E-02		5.60E-02	1.44E+00	5.39E-01		8.21E-07
Cm2O3	3.11E-09		6.21E-11	3.05E-09		2.12E-09	5.44E-08	3.77E-08		3.11E-14
Co2O3	6.05E-05		1.21E-06	5.93E-05		4.13E-05	1.06E-03	3.13E-08		6.05E-10
Cr2O3	1.27E+01		2.54E-01	1.25E+01		8.68E+00	2.23E+02	1.71E-01		1.27E-04
Cs2O	1.30E-03		2.61E-05	1.28E-03		8.89E-04	2.28E-02	4.13E-03		1.30E-08
CuO	3.65E-03		7.30E-05	3.58E-03		2.49E-03	6.39E-02	4.63E-04		3.65E-08
Fe2O3	1.45E+00		2.90E-02	1.42E+00		9.90E-01	2.54E+01	2.13E+00		1.45E-05
FeO	4.52E-05		9.04E-07	4.43E-05		3.09E-05	7.92E-04	2.03E-08		4.52E-10
HgO	6.82E-04		1.36E-05	6.68E-04		4.66E-04	1.20E-02			6.82E-09
K2O	2.50E+01		5.00E-01	2.45E+01		1.71E+01	4.38E+02	8.76E-02		2.50E-04
La2O3	8.29E-03		1.66E-04	8.13E-03		5.66E-03	1.45E-01	5.26E-02		8.29E-08
Li2O								9.49E-01		
MgO	3.14E-05		6.29E-07	3.08E-05		2.15E-05	5.51E-04	2.97E-02		3.14E-10
MnO	1.84E-06		3.69E-08	1.81E-06		1.26E-06	3.23E-05	8.27E-10		1.84E-11
MoO3	3.19E-04		6.38E-06	3.13E-04		2.18E-04	5.59E-03	9.44E-05		3.19E-09
Na2O	3.37E+03		6.74E+01	3.30E+03		2.30E+03	5.91E+04	5.67E+00		3.37E-02

STREAM NAME	625	626	627	628	629	630	631	632	633	634
SOLID COMPONENTS										
Chemicals Continued (MT)										
Nd_2O_3	3.41E-01		6.82E-03	3.34E-01		2.33E-01	5.98E+00	5.68E-01		3.41E-06
NpO_2	3.31E-04		6.61E-06	3.24E-04		2.26E-04	5.79E-03	1.97E-04		3.31E-09
HfO_2	3.22E-01		6.44E-03	3.15E-01		2.20E-01	5.64E+00	6.63E-02		3.22E-06
PuO_2	9.55E-04		1.91E-05	9.35E-04		6.52E-04	1.67E-02	9.68E-04		9.55E-09
Rb_2O	7.73E-06		1.55E-07	7.58E-06		5.28E-06	1.35E-04	3.47E-09		7.73E-11
Re_2O_7	4.14E-06		8.29E-08	4.06E-06		2.83E-06	7.26E-05	1.86E-09		4.14E-11
Rh_2O_3	3.13E-05		6.26E-07	3.07E-05		2.14E-05	5.49E-04	4.65E-04		3.13E-10
Ru_2O_3	4.25E-05		8.51E-07	4.17E-05		2.90E-05	7.45E-04	1.94E-08		4.25E-10
SeO_3	1.56E-05		3.12E-07	1.53E-05		1.07E-05	2.74E-04	1.04E-02		1.56E-10
SiO_2	7.91E+03		1.58E+02	7.75E+03		5.40E+03	1.39E+05	2.18E+01		7.91E-02
SO_3	4.78E+00		9.56E-02	4.68E+00		3.26E+00	8.38E+01	3.54E-02		4.78E-05
SrO	1.33E-02		2.65E-04	1.30E-02		9.06E-03	2.33E-01	8.42E-02		1.33E-07
Tc_2O_7	6.03E-02		1.21E-03	5.91E-02		4.12E-02	1.06E+00	1.67E-03		6.03E-07
TeO_3	3.30E-05		6.61E-07	3.24E-05		2.26E-05	5.79E-04	1.50E-08		3.30E-10
ThO_2	5.64E-06		1.13E-07	5.53E-06		3.85E-06	9.89E-05	6.21E-03		5.64E-11
TiO_2	4.58E-07		9.17E-09	4.49E-07		3.13E-07	8.03E-06	5.05E-04		4.58E-12
UO_3	3.31E+00		6.62E-02	3.24E+00		2.26E+00	5.80E+01	3.20E+00		3.31E-05
ZnO	2.96E-05		5.93E-07	2.90E-05		2.02E-05	5.19E-04	1.23E-03		2.96E-10
ZrO_2	1.73E-01		3.47E-03	1.70E-01		1.18E-01	3.04E+00	1.81E+00		1.73E-06
Cement										
Cu										
$CuSO_4$										
Dicyclopentadiene										
Flyash										
Oligomer										
Na Loaded Resin										
Sulfur										

STREAM NAME	635	636	637	638	639	640	641	642	643	644
LIQUID COMPONENTS										
Total Mass Flow (MT)	2.67E+04	2.67E+04	3.50E-03	2.60E+05	2.60E+05	2.60E+05	2.58E+05	2.58E+05	9.32E+02	2.59E+05
Volume (L)	2.67E+07	2.67E+07	3.50E+00	2.59E+08	2.59E+08	2.59E+08	2.58E+08	2.58E+08	9.32E+05	2.59E+08
Specific Gravity	1.00E+00	1.00E+00	1.00E+00	1.00E+00	1.00E+00	1.00E+00	1.00E+00	1.00E+00	1.00E+00	1.00E+00
Radionuclides (Ci)										
Am-241										
C-14				3.84E+03	3.84E+03	3.84E+03	3.84E+03	3.84E+03		3.84E+03
Cs-137				1.06E+04	1.06E+04	1.06E+04	1.06E+04	1.06E+04		1.06E+04
Ba-137				1.01E+04	1.01E+04	1.01E+04	1.01E+04	1.01E+04		1.01E+04
Np-237										
Pu-239										
Pu-240										
Pu-241										
Sr-90										
Y-90										
Tc-99				6.28E+02	6.28E+02	6.28E+02	6.28E+02	6.28E+02		6.28E+02
Total Curies				2.52E+04	2.52E+04	2.52E+04	2.52E+04	2.52E+04		2.52E+04
Chemicals (MT)										
Ag+										
Am+3										
As+5										
B+3										
Ba+2										
Be+2										
Bi+3										
Ca+2										
Cd+2				1.11E-01	1.11E-01	1.11E-01	1.11E-01	1.11E-01		1.11E-01
Ce+3										
Cm+3										
Co+3										
Cs+				6.14E-04	6.14E-04	6.14E-04	6.14E-04	6.14E-04		6.14E-04
Cu+2										
Fe+2										
Fe+3										
H+				1.72E+01	1.72E+01	1.72E+01	1.72E+01	1.72E+01		1.72E+01
Hg+2										
K+				2.10E-01	2.10E-01	2.10E-01	2.10E-01	2.10E-01		2.10E-01
La+3										
Mg+2										
Mn+2										
Mn+4										
Mo+6				1.12E-05	1.12E-05	1.12E-05	1.12E-05	1.12E-05		1.12E-05
Na+				2.53E+01	2.53E+01	2.53E+01	2.53E+01	2.53E+01		2.53E+01
Ni+3										
Np+4										
Pb+4				1.39E-01	1.39E-01	1.39E-01	1.39E-01	1.39E-01		1.39E-01
Pu+4										
Rb+										
Re+7										
Rh+3										
Ru+3				1.72E-05	1.72E-05	1.72E-05	1.72E-05	1.72E-05		1.72E-05
Se+6				4.85E-06	4.85E-06	4.85E-06	4.85E-06	4.85E-06		4.85E-06
Si+4										
Sr+2										
Te+6				1.20E-05	1.20E-05	1.20E-05	1.20E-05	1.20E-05		1.20E-05
UO2+2										
Zn+2										
Zr+4										
Al(OH)4-										
HO2-				1.32E-03	1.32E-03	1.32E-03	1.32E-03	1.32E-03		1.32E-03
Cl-				8.08E+01	8.08E+01	8.08E+01	8.08E+01	8.08E+01		8.08E+01
CO3-2										
Cr(OH)4-										
F-				6.01E+01	6.01E+01	6.01E+01	6.01E+01	6.01E+01		6.01E+01
I-				6.67E-02	6.67E-02	6.67E-02	6.67E-02	6.67E-02		6.67E-02
NO2-										
NO3-				7.30E+02	7.30E+02	7.30E+02	7.30E+02	7.30E+02		7.30E+02
OH-						2.09E-17	2.09E-17	2.09E-17		2.09E-17
PO4-3				3.34E+01	3.34E+01	3.34E+01	3.34E+01	3.34E+01		3.34E+01
SO4-2										
TcO4-				5.90E-02	5.90E-02	5.90E-02	5.90E-02	5.90E-02		5.90E-02
H2O	2.67E+04	2.67E+04		8.14E+03	8.14E+03	8.14E+03	8.14E+03	8.14E+03		9.60E+03
Organic Carbon										
ZrO2:2H2O										
Hg				9.54E-03	9.54E-03	9.54E-03	9.54E-03	9.54E-03		9.54E-03
TeO2				1.44E-03	1.44E-03	1.44E-03	1.44E-03	1.44E-03		1.44E-03
Cl2										
CO				2.38E+03	2.38E+03	2.38E+03	2.38E+03	2.38E+03		2.38E+03
CO2				1.91E+05	1.91E+05	1.91E+05	1.91E+05	1.91E+05		1.91E+05
F2										
H2										
I2										
N2			3.10E-04	4.24E+04	4.24E+04	4.24E+04	4.24E+04	4.24E+04		4.37E+04
N2O										
NO				2.46E+02	2.46E+02	2.46E+02	2.46E+02	2.46E+02		2.46E+00
NO2				1.51E+03	1.51E+03	1.51E+03	1.51E+03	1.51E+03		1.89E+01
O2			3.19E-03	1.20E+04	1.20E+04	1.20E+04	1.17E+04	1.17E+04		1.16E+04
SO2				1.21E+03	1.21E+03	1.21E+03	1.21E+02	1.21E+02		1.21E+02
Dicyclopentadiene										
Glycolic Anion										
H2S				2.86E+01	2.86E+01	2.86E+01	2.86E+01	2.86E+01		2.86E+01
Glycolic Acid										
Kerosene										
NH3									9.32E+02	1.11E+01
Oligomer										
Sulfur										

STREAM NAME	635	636	637	638	639	640	641	642	643	644
SOLID COMPONENTS										
Total Mass Flow (MT)	2.70E+02	2.70E+02		1.35E-01	1.35E-01	1.35E-01	1.35E-01	1.35E-01		1.35E-01
Radionuclides (Ci)										
Am-241	4.66E+00	4.66E+00		2.33E-03	2.33E-03	2.33E-03	2.33E-03	2.33E-03		2.33E-03
C-14										
Cs-137	4.26E+02	4.26E+02		2.13E-01	2.13E-01	2.13E-01	2.13E-01	2.13E-01		2.13E-01
Ba-137	4.05E+02	4.05E+02		2.03E-01	2.03E-01	2.03E-01	2.03E-01	2.03E-01		2.03E-01
Np-237	4.10E-03	4.10E-03		2.05E-06	2.05E-06	2.05E-06	2.05E-06	2.05E-06		2.05E-06
Pu-239	9.72E-01	9.72E-01		4.86E-04	4.86E-04	4.86E-04	4.86E-04	4.86E-04		4.86E-04
Pu-240	2.54E-01	2.54E-01		1.27E-04	1.27E-04	1.27E-04	1.27E-04	1.27E-04		1.27E-04
Pu-241	2.85E+00	2.85E+00		1.43E-03	1.43E-03	1.43E-03	1.43E-03	1.43E-03		1.43E-03
Sr-90	1.09E+03	1.09E+03		5.47E-01	5.47E-01	5.47E-01	5.47E-01	5.47E-01		5.47E-01
Y-90	1.09E+03	1.09E+03		5.47E-01	5.47E-01	5.47E-01	5.47E-01	5.47E-01		5.47E-01
Tc-99	1.31E+01	1.31E+01		6.55E-03	6.55E-03	6.55E-03	6.55E-03	6.55E-03		6.55E-03
Total Curies	3.04E+03	3.04E+03		1.52E+00	1.52E+00	1.52E+00	1.52E+00	1.52E+00		1.52E+00
Chemicals (MT)										
Ag+										
Al+3										
Am+3										
As+5										
Ba+2										
Be+2										
Bi+3										
Ca+2										
Cd+2										
Ce+3										
Cm+3										
Co+3										
Cr+3										
Cs+										
Cu+2										
Fe+3										
Hg+2										
K+										
La+3										
Mg+2										
Mn+4										
Mo+6										
Na+										
Ni+3										
Np+4										
Pb+4										
Pu+4										
Rh+3										
Se+6										
Si+4										
Sr+2										
Th+4										
Ti+4										
UO2+2										
Zn+2										
Cl-	8.50E-02	8.50E-02		4.25E-05	4.25E-05	4.25E-05	4.25E-05	4.25E-05		4.25E-05
CO3-2										
F-	6.02E-01	6.02E-01		3.01E-04	3.01E-04	3.01E-04	3.01E-04	3.01E-04		3.01E-04
I-	1.35E-05	1.35E-05		6.73E-09	6.73E-09	6.73E-09	6.73E-09	6.73E-09		6.73E-09
NO2-										
NO3-										
OH-										
PO4-3										
SO4-2										
TcO4-										
Cancrinite										
H2O										
MnO2	1.01E-02	1.01E-02		5.04E-06	5.04E-06	5.04E-06	5.04E-06	5.04E-06		5.04E-06
Organic Carbon										
ZrO2:2H2O										
Ag2O	2.03E-04	2.03E-04		1.01E-07	1.01E-07	1.01E-07	1.01E-07	1.01E-07		1.01E-07
AlPO4	3.42E+00	3.42E+00		1.71E-03	1.71E-03	1.71E-03	1.71E-03	1.71E-03		1.71E-03
Al2O3	1.21E+01	1.21E+01		6.03E-03	6.03E-03	6.03E-03	6.03E-03	6.03E-03		6.03E-03
Am2O3	1.49E-06	1.49E-06		7.48E-10	7.48E-10	7.48E-10	7.48E-10	7.48E-10		7.48E-10
As2O5	3.67E-08	3.67E-08		1.84E-11	1.84E-11	1.84E-11	1.84E-11	1.84E-11		1.84E-11
B2O3	6.44E-05	6.44E-05		3.22E-08	3.22E-08	3.22E-08	3.22E-08	3.22E-08		3.22E-08
BaO	5.20E-04	5.20E-04		2.60E-07	2.60E-07	2.60E-07	2.60E-07	2.60E-07		2.60E-07
BeO	4.00E-08	4.00E-08		2.00E-11	2.00E-11	2.00E-11	2.00E-11	2.00E-11		2.00E-11
Bi2O3	7.77E-03	7.77E-03		3.88E-06	3.88E-06	3.88E-06	3.88E-06	3.88E-06		3.88E-06
CaO	2.70E+01	2.70E+01		1.35E-02	1.35E-02	1.35E-02	1.35E-02	1.35E-02		1.35E-02
CdO	5.06E-03	5.06E-03		2.53E-06	2.53E-06	2.53E-06	2.53E-06	2.53E-06		2.53E-06
Ce2O3	1.64E-03	1.64E-03		8.21E-07	8.21E-07	8.21E-07	8.21E-07	8.21E-07		8.21E-07
Cm2O3	6.21E-11	6.21E-11		3.11E-14	3.11E-14	3.08E-14	3.08E-14	3.08E-14		3.08E-14
Co2O3	1.21E-06	1.21E-06		6.05E-10	6.05E-10	6.05E-10	6.05E-10	6.05E-10		6.05E-10
Cr2O3	2.54E-01	2.54E-01		1.27E-04	1.27E-04	1.27E-04	1.27E-04	1.27E-04		1.27E-04
Cs2O	2.60E-05	2.60E-05		1.30E-08	1.30E-08	1.30E-08	1.30E-08	1.30E-08		1.30E-08
CuO	7.29E-05	7.29E-05		3.65E-08	3.65E-08	3.65E-08				
Fe2O3	2.90E-02	2.90E-02		1.45E-05	1.45E-05	1.45E-05	1.45E-05	1.45E-05		1.45E-05
FeO	9.03E-07	9.03E-07		4.52E-10	4.52E-10	4.52E-10	4.52E-10	4.52E-10		4.52E-10
HgO	1.36E-05	1.36E-05		6.82E-09	6.82E-09	6.82E-09	6.82E-09	6.82E-09		6.82E-09
K2O	4.99E-01	4.99E-01		2.50E-04	2.50E-04	2.50E-04	2.50E-04	2.50E-04		2.50E-04
La2O3	1.66E-04	1.66E-04		8.29E-08	8.29E-08	8.29E-08	8.29E-08	8.29E-08		8.29E-08
Li2O										
MgO	6.29E-07	6.29E-07		3.14E-10	3.14E-10	3.14E-10	3.14E-10	3.14E-10		3.14E-10
MnO	3.69E-08	3.69E-08		1.84E-11	1.84E-11	1.84E-11	1.84E-11	1.84E-11		1.84E-11
MoO3	6.38E-06	6.38E-06		3.19E-09	3.19E-09	3.19E-09	3.19E-09	3.19E-09		3.19E-09
Na2O	6.74E+01	6.74E+01		3.37E-02	3.37E-02	3.37E-02	3.37E-02	3.37E-02		3.37E-02

STREAM NAME	635	636	637	638	639	640	641	642	643	644
SOLID COMPONENTS										
Chemicals Continued (MT)										
Ni2O3	6.82E-03	6.82E-03		3.41E-06	3.41E-06	3.41E-06	3.41E-06	3.41E-06		3.41E-06
NpO2	6.61E-06	6.61E-06		3.31E-09	3.31E-09	3.31E-09	3.31E-09	3.31E-09		3.31E-09
PbO2	6.43E-03	6.43E-03		3.22E-06	3.22E-06	3.22E-06	3.22E-06	3.22E-06		3.22E-06
PuO2	1.91E-05	1.91E-05		9.55E-09	9.55E-09	9.55E-09	9.55E-09	9.55E-09		9.55E-09
Rb2O	1.55E-07	1.55E-07		7.73E-11	7.73E-11	7.73E-11	7.73E-11	7.73E-11		7.73E-11
Re2O7	8.28E-08	8.28E-08		4.14E-11	4.14E-11	4.14E-11	4.14E-11	4.14E-11		4.14E-11
Rh2O3	6.26E-07	6.26E-07		3.13E-10	3.13E-10	3.13E-10	3.13E-10	3.13E-10		3.13E-10
Ru2O3	8.50E-07	8.50E-07		4.25E-10	4.25E-10	4.25E-10	4.25E-10	4.25E-10		4.25E-10
SeO3	3.12E-07	3.12E-07		1.56E-10	1.56E-10	1.56E-10	1.56E-10	1.56E-10		1.56E-10
SiO2	1.58E+02	1.58E+02		7.91E-02	7.91E-02	7.91E-02	7.91E-02	7.91E-02		7.91E-02
SO3	9.56E-02	9.56E-02		4.78E-05	4.78E-05	4.78E-05	4.78E-05	4.78E-05		4.78E-05
SrO	2.65E-04	2.65E-04		1.33E-07	1.33E-07	1.33E-07	1.33E-07	1.33E-07		1.33E-07
Tc2O7	1.21E-03	1.21E-03		6.03E-07	6.03E-07	6.03E-07	6.03E-07	6.03E-07		6.03E-07
TeO3	6.60E-07	6.60E-07		3.30E-10	3.30E-10	3.30E-10	3.30E-10	3.30E-10		3.30E-10
ThO2	1.13E-07	1.13E-07		5.64E-11	5.64E-11	5.64E-11	5.64E-11	5.64E-11		5.64E-11
TiO2	9.16E-09	9.16E-09		4.58E-12	4.58E-12	4.58E-12	4.58E-12	4.58E-12		4.58E-12
UO3	6.62E-02	6.62E-02		3.31E-05	3.31E-05	3.31E-05	3.31E-05	3.31E-05		3.31E-05
ZrO	5.92E-07	5.92E-07		2.96E-10	2.96E-10	2.96E-10	2.96E-10	2.96E-10		2.96E-10
ZrO2	3.46E-03	3.46E-03		1.73E-06	1.73E-06	1.73E-06	1.73E-06	1.73E-06		1.73E-06
Cement										
Cu										
CuSO4										
Dicyclopentadiene										
Flyash										
Oligomer										
Na Loaded Resin										
Sulfur										

STREAM NAME	645	646	647	648	649	650	651	652	653	654
LIQUID COMPONENTS										
Total Mass Flow (MT)	2.59E+05		1.48E+03	1.80E+03	1.00E+01	1.31E+03	8.23E+04	8.33E+04	1.48E+03	2.41E+03
Volume (L)	2.59E+08		1.48E+06	1.80E+06	1.00E+04	1.31E+06	8.23E+07	8.33E+07	1.48E+06	2.41E+06
Specific Gravity	1.00E+00		1.00E+00	1.00E+00	1.00E+00	1.00E+00	1.00E+00	1.00E+00	1.00E+00	1.00E+00
Radionuclides (Ci)										
Am-241										
C-14	3.84E+03									
Cs-137	1.06E+04									
Ba-137	1.01E+04									
Np-237										
Pu-239										
Pu-240										
Pu-241										
Sr-90										
Y-90										
Tc-99	6.28E+02									
Total Curies	2.52E+04									
Chemicals (MT)										
Ag+										
Am+3										
As+5										
B+3										
Ba+2										
Be+2										
Bi+3										
Ca+2										
Cd+2	1.11E-01									
Ce+3										
Cm+3										
Co+3										
Cs+	6.14E-04									
Cu+2										
Fe+2										
Fe+3										
H+	1.72E+01									
Hg+2										
K+	2.10E-01									
La+3										
Mg+2										
Mn+2										
Mn+4										
Mo+6	1.12E-05									
Na+	2.53E+01									
Ni+3										
Np+4										
Pb+4	1.39E-01									
Pu+4										
Rb+										
Re+7										
Rh+3										
Ru+3	1.72E-05									
Se+6	4.85E-06									
Si+4										
Sr+2										
Te+6	1.20E-05									
UO2+2										
Zn+2										
Zr+4										
Al(OH)4-										
BO2-	1.32E-03									
Cl-	8.08E+01									
CO3-2										
Cr(OH)4-										
F-	6.01E+01									
I-	6.67E-02									
NO2-										
NO3-	7.30E+02									
OH-	2.09E-17									
PO4-3	3.34E+01									
SO4-2										
TcO4-	5.90E-02									
H2O	9.60E+03			1.23E+03						
Organic Carbon										
ZrO2:2H2O										
Hg	9.54E-03									
TcO2	1.44E-03									
Cl2										
CO	2.38E+03									
CO2	1.91E+05									
F2										
H2			2.60E+02			8.82E+01		8.82E+01		
I2										
N2	4.37E+04		1.20E+03			1.20E+03	6.50E+04	6.62E+04		
N2O										
NO	2.46E+00									
NO2	1.89E+01									
O2	1.16E+04						1.73E+04	1.70E+04		
SO2	1.21E+02									
Dicyclopentadiene										
Glycolic Anion										
H2S	2.86E+01			5.79E+02						
Glycolic Acid										
Kerosene					1.00E+01					
NH3	1.11E+01		1.48E+01			1.48E+01		1.48E+01	1.48E+03	2.41E+03
Oligomer										
Sulfur										

STREAM NAME	645	646	647	648	649	650	651	652	653	654
SOLID COMPONENTS										
Total Mass Flow (MT)	1.35E-01	1.50E+08				1.50E+08				
Radionuclides (Ci)										
Am-241	2.33E-03									
C-14										
Cs-137	2.13E-01									
Ba-137	2.03E-01									
Np-237	2.05E-06									
Pu-239	4.86E-04									
Pu-240	1.27E-04									
Pu-241	1.43E-03									
Sr-90	5.47E-01									
Y-90	5.47E-01									
Tc-99	6.55E-03									
Total Curies	1.52E+00									
Chemicals (MT)										
Ag+										
Al+3										
Am+3										
As+5										
Ba+2										
Be+2										
Bi+3										
Ca+2										
Cd+2										
Ce+3										
Cm+3										
Co+3										
Cr+3										
Cs+										
Cu+2										
Fe+3										
Hg+2										
K+										
La+3										
Mg+2										
Mn+4										
Mo+6										
Na+										
Ni+3										
Np+4										
Pb+4										
Pu+4										
Rh+3										
Se+6										
Si+4										
Sr+2										
Th+4										
Ti+4										
UO2+2										
Zn+2										
Cl-	4.25E-05									
CO3-2										
F-	3.01E-04									
I-	6.73E-09									
NO2-										
NO3-										
OH-										
PO4-3										
SO4-2										
TcO4-										
Cancrinite										
H2O										
MnO2	5.04E-06									
Organic Carbon										
ZrO2:2H2O										
Ag2O	1.01E-07									
AlPO4	1.71E-03									
Al2O3	6.03E-03									
Am2O3	7.48E-10									
As2O5	1.84E-11									
B2O3	3.22E-08									
BaO	2.60E-07									
BeO	2.00E-11									
Bi2O3	3.88E-06									
CaO	1.35E-02									
CdO	2.53E-06									
Ce2O3	8.21E-07									
Cm2O3	3.08E-14									
Co2O3	6.05E-10									
Cr2O3	1.27E-04									
Cs2O	1.30E-08									
CuO		1.50E+08				1.50E+08				
Fe2O3	1.45E-05									
FeO	4.52E-10									
HgO	6.82E-09									
K2O	2.50E-04									
La2O3	8.29E-08									
Li2O										
MgO	3.14E-10									
MnO	1.84E-11									
MoO3	3.19E-09									
Na2O	3.37E-02									

STREAM NAME	645	646	647	648	649	650	651	652	653	654
SOLID COMPONENTS										
Chemicals Continued (MT)										
Nd2O3	3.41E-06									
NpO2	3.31E-09									
PbO2	3.22E-06									
PuO2	9.55E-09									
Rb2O	7.73E-11									
Re2O7	4.14E-11									
Rh2O3	3.13E-10									
Ru2O3	4.25E-10									
SeO3	1.56E-10									
SiO2	7.91E-02									
SO3	4.78E-05									
SrO	1.33E-07									
Tc2O7	6.03E-07									
TeO3	3.30E-10									
ThO2	5.64E-11									
TiO2	4.58E-12									
UO3	3.31E-05									
ZnO	2.96E-10									
ZrO2	1.73E-06									
Cement										
Cu										
CuSO4		2.71E+03				1.08E+03				
Dicyclopentadiene										
Flyash										
Oligomer										
Na Loaded Resin										
Sulfur										

STREAM NAME	655	656	657	661	662	670	671	672	673	674
LIQUID COMPONENTS										
Total Mass Flow (MT)	4.71E+04		2.74E+02	1.26E+00	1.26E+00	1.20E+03	3.02E+03	3.02E+03	3.02E+03	2.04E+01
Volume (L)	3.38E+07		2.74E+05	1.26E+03	1.26E+03	1.20E+06	3.02E+06	3.02E+06	3.02E+06	2.04E+04
Specific Gravity	1.39E+00		1.00E+00	1.00E+00	1.00E+00	1.00E+00	1.00E+00	1.00E+00	1.00E+00	1.00E+00
Radionuclides (Ci)										
Am-241			2.67E-05							
C-14			1.12E-05							
Cs-137			1.55E+01							
Ba-137			1.48E+01							
Np-237			2.35E-08							
Pu-239			5.57E-06							
Pu-240			1.46E-06							
Pu-241			1.63E-05							
Sr-90			6.26E-03							
Y-90			6.26E-03							
Tc-99			4.59E-03							
Total Curies			3.03E+01							
Chemicals (MT)										
Ag+			1.08E-09							
Am+3			7.79E-12							
As+5			1.37E-13							
B+3			1.16E-10							
Ba+2			2.67E-09							
Be+2			8.20E-14							
Bi+3			3.99E-08							
Ca+2			5.57E-08							
Cd+2			2.58E-08							
Ce+3			7.99E-09							
Cm+3			3.21E-16							
Co+3			4.94E-12							
Cs+			8.95E-07							
Cu+2			3.34E-10							
Fe+2			4.03E-12							
Fe+3			1.16E-07							
H+	4.26E+02		2.58E-07							
Hg+2			1.97E-10							
K+			3.78E-06							
La+3			8.06E-10							
Mg+2			4.93E-13							
Mn+2			1.64E-13							
Mn+4			3.65E-08							
Mo+6			2.44E-11							
Na+			5.54E-04							
Ni+3			2.77E-08							
Np+4			3.34E-11							
Hg+4			3.25E-08							
Pu+4			9.65E-11							
Rb+			8.11E-13							
Re+7			3.65E-13							
Rh+3			2.87E-12							
Ru+3			4.00E-12							
Se+6			4.55E-13							
Si+4			5.39E-08							
Sn+2			1.29E-09							
Te+6			2.79E-12							
UO2+2			3.58E-07							
Zn+2			2.63E-12							
Zr+4			8.20E-14							
Al(OH)4-			4.28E-05							
BO2-			5.29E-16							
Cl-			2.29E-06							
CO3-2			7.20E-10							
Cr(OH)4-			2.33E-06							
F-			3.84E-06							
I-			3.05E-10							
NO2-			2.68E-05							
NO3-	2.64E+04		1.09E-03							
OH-			1.19E-08							
PO4-3			1.56E-05							
SO4-2			8.95E-06							
TcO4-			4.45E-07							
H2O	2.03E+04		2.19E+02	1.26E+00	1.26E+00		1.33E+03	1.33E+03	1.33E+03	
Organic Carbon			2.50E-05							
ZrO2:2H2O			2.55E-08							
H2			7.13E-04							
TcO2										
Cl2										
CO							2.04E+01	2.04E+01	2.04E+01	2.04E+01
CO2			4.39E+01							
F2										
Br2										
I2										
N2						9.23E+02	9.23E+02	9.23E+02	9.23E+02	
N2O			8.54E-04							
NO			1.17E+01							
NO2							2.01E-02	2.01E-02	2.01E-02	2.01E-02
O2						2.80E+02				
SO2							3.45E+02	3.45E+02	3.45E+02	
Dicyclopentadiene										
Glycolic Anion			1.47E-02							
H2S							3.96E+02	3.96E+02	3.96E+02	
Glycolic Acid										
Kerosene										
NH3										
Oligomer										
Sulfur										

STREAM NAME	655	656	657	661	662	670	671	672	673	674
SOLID COMPONENTS										
Total Mass Flow (MT)			1.27E-02		1.27E-02					
Radionuclides (Ci)										
Am-241			4.83E-02		4.83E-02					
C-14			1.09E-03		1.09E-03					
Cs-137			1.54E+00		1.54E+00					
Ba-137			1.46E+00		1.46E+00					
Np-237			3.14E-05		3.14E-05					
Pu-239			1.27E-02		1.27E-02					
Pu-240			3.15E-03		3.15E-03					
Pu-241			3.54E-02		3.54E-02					
Sr-90			2.55E+01		2.55E+01					
Y-90			2.55E+01		2.55E+01					
Tc-99			4.69E-03		4.69E-03					
Total Curies			5.42E+01		5.42E+01					
Chemicals (MT)										
Ag+			7.40E-07		7.40E-07					
Al+3			3.73E-04		3.72E-04					
Am+3			1.41E-08		1.41E-08					
As+5			1.13E-09		1.13E-09					
Ba+2			1.87E-06		1.87E-06					
Be+2			1.54E-09		1.54E-09					
Bi+3			1.26E-04		1.26E-04					
Ca+2			7.24E-05		7.24E-05					
Cd+2			3.28E-06		3.28E-06					
Ce+3			1.18E-04		1.18E-04					
Cm+3			8.78E-12		8.77E-12					
Co+3			7.43E-13		7.43E-13					
Cr+3			2.89E-05		2.89E-05					
Cs+			1.00E-07		1.00E-07					
Cu+2			9.42E-08		9.41E-08					
Fe+3			3.81E-04		3.81E-04					
Hg+2			4.41E-08		4.40E-08					
K+			1.48E-05		1.48E-05					
La+3			1.15E-05		1.15E-05					
Mg+2			4.13E-06		4.12E-06					
Mn+4			9.00E-05		8.99E-05					
Mo+6			1.61E-08		1.61E-08					
Na+			2.92E-04		2.92E-04					
Ni+3			1.03E-04		1.03E-04					
Np+4			4.44E-08		4.44E-08					
Pb+4			1.47E-05		1.46E-05					
Pu+4			2.18E-07		2.18E-07					
Ra+3			9.63E-08		9.63E-08					
Se+6			1.66E-06		1.66E-06					
Si+4			1.16E-04		1.16E-04					
Sr+2			1.83E-05		1.83E-05					
Th+4			1.40E-06		1.40E-06					
Ti+4			7.73E-08		7.73E-08					
UO2+2			7.72E-04		7.72E-04					
Zn+2			2.53E-07		2.53E-07					
Cl-			4.51E-06		4.51E-06					
CO3-2			5.45E-05		5.45E-05					
F-			3.42E-05		3.42E-05					
I-			6.98E-10		6.97E-10					
NO2-			3.09E-05		3.09E-05					
NO3-			4.93E-04		4.92E-04					
OH-			1.30E-03		1.30E-03					
PO4-3			2.43E-04		2.43E-04					
SO4-2			1.28E-05		1.28E-05					
TcO4-			4.54E-07		4.54E-07					
Cancrinite			1.35E-03		1.35E-03					
H2O										
MnO2			2.86E-07		2.85E-07					
Organic Carbon			4.36E-05		4.36E-05					
ZrO2:2H2O			5.98E-04		5.97E-04					
Ag2O			1.60E-09		1.60E-09					
AlPO4			6.64E-07		6.64E-07					
Al2O3			1.99E-06		1.99E-06					
Am2O3			3.10E-11		3.10E-11					
As2O5			3.48E-12		3.48E-12					
B2O3			8.51E-04		8.51E-04					
BaO			4.19E-09		4.19E-09					
BeO			8.55E-12		8.55E-12					
Bi2O3			2.81E-07		2.81E-07					
CaO			9.60E-07		9.60E-07					
CdO			7.56E-09		7.56E-09					
Ce2O3			2.76E-07		2.76E-07					
Cm2O3			1.93E-14		1.93E-14					
Co2O3			1.60E-14		1.60E-14					
Cr2O3			8.77E-08		8.77E-08					
Cs2O			2.11E-09		2.11E-09					
CuO			2.37E-10		2.37E-10					
Fe2O3			1.09E-06		1.09E-06					
FeO			1.04E-14		1.04E-14					
HgO										
K2O			4.49E-08		4.48E-08					
La2O3			2.70E-08		2.70E-08					
Li2O			2.43E-04		2.43E-04					
MgO			7.71E-07		7.71E-07					
MnO			4.24E-16		4.24E-16					
MoO3			4.84E-11		4.84E-11					
Na2O			2.91E-06		2.91E-06					

STREAM NAME	655	656	657	661	662	670	671	672	673	674
SOLID COMPONENTS										
Chemicals Continued (MT)										
Ni2O3			2.91E-07		2.91E-07					
NpO2			1.01E-10		1.01E-10					
PbO2			3.40E-08		3.40E-08					
PuO2			4.96E-10		4.96E-10					
Rb2O			1.78E-15		1.78E-15					
Re2O7			9.52E-16		9.52E-16					
Rh2O3			2.38E-10		2.38E-10					
Ru2O3			9.92E-15		9.92E-15					
SeO3			5.34E-09		5.33E-09					
SiO2			4.87E-03		4.87E-03					
SO3			1.81E-08		1.81E-08					
SrO			4.31E-08		4.31E-08					
Tc2O7			8.54E-10		8.54E-10					
TeO3			7.70E-15		7.70E-15					
ThO2			3.18E-09		3.18E-09					
TiO2			2.59E-10		2.58E-10					
UO3			1.64E-06		1.64E-06					
ZrO			6.32E-10		6.31E-10					
ZrO2			9.27E-07		9.26E-07					
Cement										
Cu										
CuSO4										
Dicyclopentadiene										
Flyash										
Oligomer										
Na Loaded Resin										
Sulfur										

STREAM NAME	675	676	677	678	679	680	681	682	683	684
LIQUID COMPONENTS										
Total Mass Flow (MT)	3.00E+03	3.00E+03	3.00E+03	5.03E+02	2.49E+03	2.49E+03	2.49E+03	2.49E+03	1.55E+01	2.48E+03
Volume (L)	3.00E+06	3.00E+06	3.00E+06	5.03E+05	2.49E+06	2.49E+06	2.49E+06	2.49E+06	1.55E+04	2.48E+06
Specific Gravity	1.00E+00	1.00E+00	1.00E+00	1.00E+00	1.00E+00	1.00E+00	1.00E+00	1.00E+00	1.00E+00	1.00E+00
Radionuclides (Ci)										
Am-241										
C-14										
Cs-137										
Ba-137										
Np-237										
Pu-239										
Pu-240										
Pu-241										
Sr-90										
Y-90										
Tc-99										
Total Curies										
Chemicals (MT)										
Ag+										
Am+3										
As+5										
B+3										
Ba+2										
Be+2										
Bi+3										
Ca+2										
Cd+2										
Ce+3										
Cm+3										
Co+3										
Cs+										
Cu+2										
Fe+2										
Fe+3										
H+										
Hg+2										
K+										
La+3										
Mg+2										
Mn+2										
Mn+4										
Mo+6										
Na+										
Ni+3										
Np+4										
Pb+4										
Pu+4										
Rb+										
Re+7										
Rh+3										
Ru+3										
Se+6										
Si+4										
Sr+2										
Te+6										
UO2+2										
Zn+2										
Zr+4										
Al(OH)4-										
BO2-										
Cl-										
CO3-2										
Cr(OH)4-										
F-										
I-										
NO2-										
NO3-										
OH-										
PO4-3										
SO4-2										
TcO4-										
H2O	1.33E+03	1.52E+03	1.52E+03		1.52E+03	1.52E+03	1.53E+03	1.53E+03		1.53E+03
Organic Carbon										
ZrO2:2H2O										
Hg										
TcO2										
Cl2										
CO										
CO2										
F2										
H2										
I2										
N2	9.23E+02	9.23E+02	9.23E+02		9.23E+02	9.23E+02	9.23E+02	9.23E+02		9.23E+02
N2O										
NO										
NO2										
O2										
SO2	3.45E+02	1.03E+01	1.03E+01		1.03E+01	1.03E+01				
Dicyclopentadiene										
Glycolic Anion										
H2S	3.96E+02	3.96E+01	3.96E+01		3.96E+01	3.96E+01	2.86E+01	2.86E+01		2.86E+01
Glycolic Acid										
Kerosene										
NH3										
Oligomer										
Sulfur		5.03E+02	5.03E+02	5.03E+02			1.55E+01	1.55E+01	1.55E+01	

STREAM NAME	675	676	677	678	679	680	681	682	683	684
SOLID COMPONENTS										
Total Mass Flow (MT)										
Radionuclides (Ci)										
Am-241										
C-14										
Cs-137										
Ba-137										
Np-237										
Pu-239										
Pu-240										
Pu-241										
Sr-90										
Y-90										
Tc-99										
Total Curies										
Chemicals (MT)										
Ag+										
Al+3										
Am+3										
As+5										
Ba+2										
Be+2										
Bi+3										
Ca+2										
Cd+2										
Ce+3										
Cm+3										
Co+3										
Cr+3										
Cs+										
Cu+2										
Fe+3										
Hg+2										
K+										
La+3										
Mg+2										
Mn+4										
Mo+6										
Na+										
Ni+3										
Np+4										
Pb+4										
Pu+4										
Rh+3										
Se+6										
Si+4										
Sr+2										
Th+4										
Ti+4										
UO2+2										
Zn+2										
Cl-										
CO3-2										
F-										
I-										
NO2-										
NO3-										
OH-										
PO4-3										
SO4-2										
TcO4-										
Cancrinite										
H2O										
MnO2										
Organic Carbon										
ZrO2:2H2O										
Ag2O										
AlPO4										
Al2O3										
Am2O3										
As2O5										
B2O3										
BaO										
BeO										
Bi2O3										
CaO										
CdO										
Ce2O3										
Cm2O3										
Co2O3										
Cr2O3										
Cs2O										
CuO										
Fe2O3										
FeO										
HgO										
K2O										
La2O3										
Li2O										
MgO										
MnO										
MoO3										
Na2O										

STREAM NAME	675	676	677	678	679	680	681	682	683	684
SOLID COMPONENTS										
Chemicals Continued (MT)										
Nd_2O_3										
NpO_2										
PbO_2										
PuO_2										
Rb_2O										
Re_2O_7										
Rh_2O_3										
Ru_2O_3										
SeO_3										
SiO_2										
SO_3										
SrO										
Tc_2O_7										
TeO_3										
ThO_2										
TiO_2										
UO_3										
ZnO										
ZrO_2										
Cement										
Cu										
$CuSO_4$										
Dicyclopentadiene										
Flyash										
Oligomer										
Na Loaded Resin										
Sulfur										

STREAM NAME	685	686	690	692	693	700	701	702	703	704
LIQUID COMPONENTS										
Total Mass Flow (MT)		2.48E+03	5.38E+02	3.13E+05	2.00E-03	1.83E+04	1.00E-15	1.83E+04	1.00E-15	3.18E+02
Volume (L)		2.48E+06	5.38E+05	2.97E+08	1.72E+00	1.83E+07	1.00E-12	1.83E+07	1.00E-12	3.18E+05
Specific Gravity		1.00E+00	1.00E+00	1.05E+00	1.16E+00	1.00E+00	1.00E+00	1.00E+00	1.00E+00	1.00E+00
Radionuclides (Ci)										
Am-241						2.17E-06		2.17E-06		
C-14						9.11E-07		9.11E-07		
Cs-137				2.73E+05		2.55E-02		2.55E-02		
Ba-137				2.59E+05		2.42E-02		2.42E-02		
Np-237						1.91E-09		1.91E-09		
Pu-239						4.53E-07		4.53E-07		
Pu-240						1.19E-07		1.19E-07		
Pu-241						1.33E-06		1.33E-06		
Sr-90						5.09E-04		5.09E-04		
Y-90						5.09E-04		5.09E-04		
Tc-99				1.61E+04		1.11E-05		1.11E-05		
Total Curies				5.47E+05		5.07E-02		5.07E-02		
Chemicals (MT)										
Ag+						8.80E-11		8.80E-11		
Am+3						6.34E-13		6.34E-13		
As+5						1.11E-14		1.11E-14		
B+3						9.42E-12		9.42E-12		
Ba+2						2.17E-10		2.17E-10		
Be+2						6.67E-15		6.67E-15		
Bi+3						3.25E-09		3.25E-09		
Ca+2						6.10E-07		6.10E-07		
Cd+2				2.83E+00		2.95E-09		2.95E-09		
Ce+3						6.49E-10		6.49E-10		
Cm+3						2.61E-17		2.61E-17		
Co+3						4.01E-13		4.01E-13		
Cs+				1.57E-02		1.47E-09		1.47E-09		
Cu+2						2.72E-11		2.72E-11		
Fe+2						3.28E-13		3.28E-13		
Fe+3						9.45E-09		9.45E-09		
H+				4.50E+02	9.05E-06	2.23E-01		2.23E-01		
Hg+2						1.60E-11		1.60E-11		
K+				5.37E+00		1.97E-07		1.97E-07		
La+3						6.56E-11		6.56E-11		
Mg+2						4.01E-14		4.01E-14		
Mn+2						1.33E-14		1.33E-14		
Mn+4						2.97E-09		2.97E-09		
Mo+6				2.87E-04		2.07E-12		2.07E-12		
Na+				6.47E+02		6.32E-05		6.32E-05		
Ni+3						2.25E-09		2.25E-09		
Np+4						2.71E-12		2.71E-12		
Pb+4				3.56E+00		3.71E-09		3.71E-09		
Pu+4						7.84E-12		7.84E-12		
Rb+						6.59E-14		6.59E-14		
Re+7						2.97E-14		2.97E-14		
Rh+3						2.34E-13		2.34E-13		
Ru+3				4.39E-04		4.58E-13		4.58E-13		
Se+6				1.24E-04		7.45E-14		7.45E-14		
Si+4						4.38E-09		4.38E-09		
Sr+2						1.05E-10		1.05E-10		
Te+6				3.07E-04		3.20E-13		3.20E-13		
UO2+2						2.91E-08		2.91E-08		
Zn+2						2.14E-13		2.14E-13		
Zr+4						6.67E-15		6.67E-15		
Al(OH)4-						3.44E-06		3.44E-06		
BO2-				3.38E-02		1.02E-11		1.02E-11		
Cl-				2.07E+03		1.43E-06		1.43E-06		
CO3-2						1.54E-07		1.54E-07		
Cr(OH)4-						1.87E-07		1.87E-07		
F-				1.54E+03		7.08E-07		7.08E-07		
I-				1.71E+00		5.41E-10		5.41E-10		
NO2-						2.60E-06		2.60E-06		
NO3-				1.93E+04	5.61E-04	1.37E+01		1.37E+01		
OH-						5.54E-06		5.54E-06		
PO4-3				8.54E+02		1.51E-06		1.51E-06		
SO4-2						5.55E-07		5.55E-07		
TcO4-				1.56E+00		1.08E-09		1.08E-09		
H2O		1.53E+03		2.89E+05	1.43E-03	1.83E+04	1.00E-15	1.83E+04	1.00E-15	
Organic Carbon						8.30E-07		8.30E-07		
ZrO2:2H2O						2.07E-09		2.07E-09		
H&				1.64E+00		4.90E-10		4.90E-10		
TcO2										
Cl2										
CO			2.04E+01							
CO2						4.40E-07		4.40E-07		3.18E+02
F2										
H2										
I2										
N2		9.23E+02								
N2O										
NO										
NO2			2.01E-02							
O2		3.84E-14								
SO2		1.20E-15								
Dicyclopentadiene										
Glycolic Anion						1.55E-17		1.55E-17		
H2S		2.86E+01								
Glycolic Acid										
Kerosene										
NH3										
Oligomer										
Sulfur			5.18E+02							

STREAM NAME	685	686	690	692	693	700	701	702	703	704
SOLID COMPONENTS										
Total Mass Flow (MT)				6.91E+03						
Radionuclides (Ci)										
Am-241				1.20E+02						
C-14										
Cs-137				1.09E+04						
Ba-137				1.04E+04						
Np-237				1.05E-01						
Pu-239				2.49E+01						
Pu-240				6.51E+00						
Pu-241				7.30E+01						
Sr-90				2.80E+04						
Y-90				2.80E+04						
Tc-99				3.35E+02						
Total Curies				7.78E+04						
Chemicals (MT)										
Ag+										
Al+3										
Am+3										
As+5										
Ba+2										
Be+2										
Bi+3										
Ca+2										
Cd+2										
Ce+3										
Cm+3										
Co+3										
Cr+3										
Cs+										
Cu+2										
Fe+3										
Hg+2										
K+										
La+3										
Mg+2										
Mn+4										
Mo+6										
Na+										
Ni+3										
Np+4										
Pb+4										
Pu+4										
Rh+3										
Se+6										
Si+4										
Sr+2										
Th+4										
Ti+4										
UO2+2										
Zn+2										
Cl-				2.18E+00						
CO3-2										
F-				1.54E+01						
I-				3.45E-04						
NO2-										
NO3-										
OH-										
PO4-3										
SO4-2										
TcO4-										
Cancrinite										
H2O										
MnO2				2.58E-01						
Organic Carbon										
ZrO2:2H2O										
Ag2O				5.19E-03						
AlPO4				8.77E+01						
Al2O3				3.09E+02						
Am2O3				3.83E-05						
As2O5				9.41E-07						
B2O3				1.65E-03						
BaO				1.33E-02						
BeO				1.02E-06						
Bi2O3				1.99E-01						
CaO				6.91E+02						
CdO				1.30E-01						
Ce2O3				4.20E-02						
Cm2O3				1.59E-09						
Co2O3				3.10E-05						
Cr2O3				6.51E+00						
Cs2O				6.67E-04						
CuO				1.87E-03						
Fe2O3				7.43E-01						
FeO				2.31E-05						
HgO				3.49E-04						
K2O				1.28E+01						
La2O3				4.25E-03						
Li2O										
MgO				1.61E-05						
MnO				9.44E-07						
MoO3				1.64E-04						
Na2O				1.73E+03						

STREAM NAME	685	686	690	692	693	700	701	702	703	704
SOLID COMPONENTS										
Chemicals Continued (MT)										
Ni2O3				1.75E-01						
NpO2				1.69E-04						
H2O2				1.65E-01						
PuO2				4.89E-04						
Rb2O				3.96E-06						
Re2O7				2.12E-06						
Rh2O3				1.60E-05						
Ru2O3				2.18E-05						
SeO3				8.00E-06						
SiO2				4.05E+03						
SO3				2.45E+00						
SrO				6.80E-03						
Tc2O7				3.09E-02						
TeO3				1.69E-05						
ThO2				2.89E-06						
TiO2				2.35E-07						
UO3				1.70E+00						
ZrO				1.52E-05						
ZnO2				8.88E-02						
Cement										
Cu										
CuSO4										
Dicyclopentadiene										
Flyash										
Oligomer										
Na Loaded Resin										
Sulfur										

STREAM NAME	705	706	707	708	709	710	711	712	800	801
LIQUID COMPONENTS										
Total Mass Flow (MT)	1.00E-15	3.18E+02	1.00E-15	2.00E-15		1.00E-13	1.00E-13		1.71E+06	1.56E+02
Volume (L)	1.00E-12	3.18E+05	1.00E-12	2.00E-12		1.00E-10	1.00E-10		1.71E+09	1.56E+05
Specific Gravity	1.00E+00	1.00E+00	1.00E+00	1.00E+00		1.00E+00	1.00E+00		1.00E+00	1.00E+00
Radionuclides (Ci)										
Am-241									2.19E-03	2.01E-07
C-14									9.18E-04	8.41E-08
Cs-137									1.90E+00	1.74E-04
Ba-137									1.80E+00	1.65E-04
Np-237									1.93E-06	1.77E-10
Pu-239									4.57E-04	4.18E-08
Pu-240									1.19E-04	1.09E-08
Pu-241									1.34E-03	1.23E-07
Sr-90									5.13E-01	4.70E-05
Y-90									5.13E-01	4.70E-05
Tc-99									1.39E-02	1.27E-06
Total Curies									4.74E+00	4.35E-04
Chemicals (MT)										
Ag+									8.86E-08	8.12E-12
Am+3									6.36E-10	5.85E-14
As+5									1.12E-11	1.03E-15
B+3									9.49E-09	8.70E-13
Ba+2									2.19E-07	2.00E-11
Be+2									6.72E-12	6.16E-16
Bi+3									3.27E-06	3.00E-10
Ca+2									6.09E-04	5.58E-08
Cd+2									2.97E-06	2.72E-10
Ce+3									6.54E-07	5.99E-11
Cm+3									2.63E-14	2.41E-18
Co+3									4.04E-10	3.70E-14
Cs+									1.09E-07	1.00E-11
Cu+2									2.74E-08	2.51E-12
Fe+2									3.30E-10	3.02E-14
Fe+3									9.52E-06	8.72E-10
H+										
Hg+2									1.62E-08	1.48E-12
K+									1.97E-04	1.80E-08
La+3									6.60E-08	6.05E-12
Mg+2									4.04E-11	3.70E-15
Mn+2									1.34E-11	1.23E-15
Mn+4									2.99E-06	2.74E-10
Mo+6									2.09E-09	1.91E-13
Na+									6.34E-02	5.81E-06
Ni+3									2.27E-06	2.08E-10
Np+4									2.73E-09	2.51E-13
Pb+4									3.73E-06	3.42E-10
Pu+4									7.90E-09	7.24E-13
Ra+									6.64E-11	6.08E-15
Re+7									2.99E-11	2.74E-15
Rh+3									2.35E-10	2.16E-14
Ru+3									4.60E-10	4.22E-14
Se+6									7.48E-11	6.85E-15
Si+4									4.41E-06	4.04E-10
Sr+2									1.05E-07	9.64E-12
Te+6									3.21E-10	2.94E-14
UO2+2									2.93E-05	2.69E-09
Zn+2									2.15E-10	1.97E-14
Zr+4									6.72E-12	6.16E-16
Al(OH)4-									3.46E-03	3.17E-07
BO2-									1.02E-08	9.35E-13
Cl-									1.44E-03	1.32E-07
CO3-2									1.61E-04	1.48E-08
Cr(OH)4-									1.89E-04	1.73E-08
F-									7.10E-04	6.50E-08
I-									5.40E-07	4.95E-11
NO2-									2.64E-03	2.41E-07
NO3-									7.06E-02	6.47E-06
OH-									5.66E-03	5.18E-07
PO4-3									1.52E-03	1.39E-07
SO4-2									5.61E-04	5.14E-08
TcO4-									1.35E-06	1.23E-10
H2O	1.00E-15		1.00E-15	2.00E-15		1.00E-13	1.00E-13		1.71E+06	1.56E+02
Organic Carbon									8.36E-04	7.66E-08
ZrO2:2H2O									2.08E-06	1.91E-10
Hg									5.14E-07	4.71E-11
TcO2										
Cl2										
CO										
CO2		3.18E+02							4.90E-04	4.49E-08
F2										
H2										
I2										
N2										
N2O										
NO										
NO2										
O2										
SO2										
Dicyclopentadiene										
Glycolic Anion										
H2S									4.98E-07	4.56E-11
Glycolic Acid										
Kerosene										
NH3										
Oligomer										
Sulfur										

STREAM NAME	705	706	707	708	709	710	711	712	800	801
SOLID COMPONENTS										
Total Mass Flow (MT)										
Radionuclides (Ci)										
Am-241										
C-14										
Cs-137										
Ba-137										
Np-237										
Pu-239										
Pu-240										
Pu-241										
Sr-90										
Y-90										
Tc-99										
Total Curies										
Chemicals (MT)										
Ag+										
Al+3										
Am+3										
As+5										
Ba+2										
Be+2										
Bi+3										
Ca+2										
Cd+2										
Ce+3										
Cm+3										
Co+3										
Cr+3										
Cs+										
Cu+2										
Fe+3										
Hg+2										
K+										
La+3										
Mg+2										
Mn+4										
Mo+6										
Na+										
Ni+3										
Np+4										
Pb+4										
Pu+4										
Rh+3										
Se+6										
Si+4										
Sr+2										
Th+4										
Ti+4										
UO2+2										
Zn+2										
Cl-										
CO3-2										
F-										
I-										
NO2-										
NO3-										
OH-										
PO4-3										
SO4-2										
TcO4-										
Cancrinite										
H2O										
MnO2										
Organic Carbon										
ZrO2:2H2O										
Ag2O										
AlPO4										
Al2O3										
Am2O3										
As2O5										
B2O3										
BaO										
BeO										
Bi2O3										
CaO										
CdO										
Ce2O3										
Cm2O3										
Co2O3										
Cr2O3										
Cs2O										
CuO										
Fe2O3										
FeO										
HgO										
K2O										
La2O3										
Li2O										
MgO										
MnO										
MoO3										
Na2O										

STREAM NAME	705	706	707	708	709	710	711	712	800	801
SOLID COMPONENTS										
Chemicals Continued (MT)										
Ni_2O_3										
NpO_2										
PbO_2										
PuO_2										
Rb_2O										
Re_2O_7										
Rh_2O_3										
Ru_2O_3										
SeO_3										
SiO_2										
SO_3										
SrO										
Tc_2O_7										
TeO_3										
ThO_2										
TiO_2										
UO_3										
ZrO										
ZrO_2										
Cement										
Cu										
$CuSO_4$										
Dicyclopentadiene										
Flyash										
Oligomer										
Na Loaded Resin										
Sulfur										

STREAM NAME	802	803	804	805	806	807	900	901	902	903
LIQUID COMPONENTS										
Total Mass Flow (MT)	1.71E+06	1.00E-15	1.71E+06		1.71E+06	1.34E+06				
Volume (L)	1.71E+09	6.50E-13	1.71E+09		1.71E+09	1.34E+09				
Specific Gravity	1.00E+00	1.54E+00	1.00E+00		1.00E+00	1.00E+00				
Radionuclides (Ci)										
Am-241	2.19E-03		2.19E-03		2.19E-03	1.72E-03				
C-14	9.18E-04		9.18E-04		9.18E-04	7.19E-04				
Cs-137	1.90E+00		1.90E+00		1.90E+00	1.49E+00				
Ba-137	1.80E+00		1.80E+00		1.80E+00	1.41E+00				
Np-237	1.93E-06		1.93E-06		1.93E-06	1.51E-06				
Pu-239	4.57E-04		4.57E-04		4.57E-04	3.58E-04				
Pu-240	1.19E-04		1.19E-04		1.19E-04	9.35E-05				
Pu-241	1.34E-03		1.34E-03		1.34E-03	1.05E-03				
Sr-90	5.13E-01		5.13E-01		5.13E-01	4.02E-01				
Y-90	5.13E-01		5.13E-01		5.13E-01	4.02E-01				
Tc-99	1.39E-02		1.39E-02		1.39E-02	1.09E-02				
Total Curies	4.74E+00		4.74E+00		4.74E+00	3.72E+00				
Chemicals (MT)										
Ag+	8.86E-08		8.86E-08		8.86E-08	6.94E-08				
Am+3	6.38E-10		6.38E-10		6.38E-10	5.00E-10				
As+5	1.12E-11		1.12E-11		1.12E-11	8.79E-12				
B+3	9.49E-09		9.49E-09		9.49E-09	7.44E-09				
Ba+2	2.19E-07		2.19E-07		2.19E-07	1.71E-07				
Be+2	6.72E-12		6.72E-12		6.72E-12	5.27E-12				
Bi+3	3.27E-06		3.27E-06		3.27E-06	2.56E-06				
Ca+2	6.09E-04		6.09E-04		6.09E-04	4.77E-04				
Cd+2	2.97E-06		2.97E-06		2.97E-06	2.33E-06				
Ce+3	6.54E-07		6.54E-07		6.54E-07	5.13E-07				
Cm+3	2.63E-14		2.63E-14		2.63E-14	2.06E-14				
Co+3	4.04E-10		4.04E-10		4.04E-10	3.17E-10				
Cs+	1.09E-07		1.09E-07		1.09E-07	8.57E-08				
Cu+2	2.74E-08		2.74E-08		2.74E-08	2.15E-08				
Fe+2	3.30E-10		3.30E-10		3.30E-10	2.59E-10				
Fe+3	9.52E-06		9.52E-06		9.52E-06	7.46E-06				
H+										
Hg+2	1.62E-08		1.62E-08		1.62E-08	1.27E-08				
K+	1.97E-04		1.97E-04		1.97E-04	1.54E-04				
La+3	6.60E-08		6.60E-08		6.60E-08	5.18E-08				
Mg+2	4.04E-11		4.04E-11		4.04E-11	3.17E-11				
Mn+2	1.34E-11		1.34E-11		1.34E-11	1.05E-11				
Mo+4	2.99E-06		2.99E-06		2.99E-06	2.34E-06				
Mo+6	2.09E-09		2.09E-09		2.09E-09	1.64E-09				
Na+	6.34E-02	2.88E-16	6.34E-02		6.34E-02	4.97E-02				
Ni+3	2.27E-06		2.27E-06		2.27E-06	1.78E-06				
Np+4	2.73E-09		2.73E-09		2.73E-09	2.14E-09				
Pb+4	3.73E-06		3.73E-06		3.73E-06	2.93E-06				
Pu+4	7.90E-09		7.90E-09		7.90E-09	6.19E-09				
Rb+	6.64E-11		6.64E-11		6.64E-11	5.20E-11				
Re+7	2.99E-11		2.99E-11		2.99E-11	2.35E-11				
Rh+3	2.35E-10		2.35E-10		2.35E-10	1.84E-10				
Ru+3	4.60E-10		4.60E-10		4.60E-10	3.61E-10				
Se+6	7.48E-11		7.48E-11		7.48E-11	5.86E-11				
Si+4	4.41E-06		4.41E-06		4.41E-06	3.46E-06				
Sr+2	1.05E-07		1.05E-07		1.05E-07	8.25E-08				
Te+6	3.21E-10		3.21E-10		3.21E-10	2.52E-10				
UO2+2	2.93E-05		2.93E-05		2.93E-05	2.30E-05				
Zn+2	2.15E-10		2.15E-10		2.15E-10	1.69E-10				
Zr+4	6.72E-12		6.72E-12		6.72E-12	5.27E-12				
Al(OH)4-	3.46E-03		3.46E-03		3.46E-03	2.71E-03				
BO2-	1.02E-08		1.02E-08		1.02E-08	8.00E-09				
Cl-	1.44E-03		1.44E-03		1.44E-03	1.13E-03				
CO3-2	1.61E-04		1.61E-04		1.61E-04	1.26E-04				
Cr(OH)4-	1.89E-04		1.89E-04		1.89E-04	1.48E-04				
F-	7.09E-04		7.09E-04		7.09E-04	5.56E-04				
I-	5.40E-07		5.40E-07		5.40E-07	4.23E-07				
NO2-	2.64E-03		2.64E-03		2.64E-03	2.07E-03				
NO3-	7.06E-02		7.06E-02		7.06E-02	5.53E-02				
OH-	5.65E-03	2.13E-16	5.65E-03		5.65E-03	4.43E-03				
PO4-3	1.52E-03		1.52E-03		1.52E-03	1.19E-03				
SO4-2	5.61E-04		5.61E-04		5.61E-04	4.39E-04				
TcO4-	1.35E-06		1.35E-06		1.35E-06	1.05E-06				
H2O	1.71E+06	5.00E-16	1.71E+06		1.71E+06	1.34E+06				
Organic Carbon	8.36E-04		8.36E-04		8.36E-04	6.55E-04				
ZrO2:2H2O	2.08E-06		2.08E-06		2.08E-06	1.63E-06				
Hg	5.14E-07		5.14E-07		5.14E-07	4.03E-07				
TcO2										
Cl2										
CO										
CO2	4.90E-04		4.90E-04		4.90E-04	3.84E-04				
F2										
H2										
I2										
N2										
N2O										
NO										
NO2										
O2										
SO2										
Dicyclopentadiene										
Glycolic Anion	4.98E-07		4.98E-07		4.98E-07	3.90E-07				
H2S										
Glycolic Acid										
Kerosene										
NH3										
Oligomer										
Sulfur										

STREAM NAME	802	803	804	805	806	807	900	901	902	903
SOLID COMPONENTS										
Total Mass Flow (MT)										
Radionuclides (Ci)										
Am-241										
C-14										
Cs-137										
Ba-137										
Np-237										
Pu-239										
Pu-240										
Pu-241										
Sr-90										
Y-90										
Tc-99										
Total Curies										
Chemicals (MT)										
Ag+										
Al+3										
Am+3										
As+5										
Ba+2										
Be+2										
Bi+3										
Ca+2										
Cd+2										
Ce+3										
Cm+3										
Co+3										
Cr+3										
Cs+										
Cu+2										
Fe+3										
Hg+2										
K+										
La+3										
Mg+2										
Mn+4										
Mo+6										
Na+										
Ni+3										
Np+4										
Pb+4										
Pu+4										
Rh+3										
Se+6										
Si+4										
Sr+2										
Th+4										
Ti+4										
UO2+2										
Zn+2										
Cl-										
CO3-2										
F-										
I-										
NO2-										
NO3-										
OH-										
PO4-3										
SO4-2										
TcO4-										
Cancrinite										
H2O										
MnO2										
Organic Carbon										
ZrO2:2H2O										
Ag2O										
AlPO4										
Al2O3										
Am2O3										
As2O5										
B2O3										
BaO										
BeO										
Bi2O3										
CaO										
CdO										
Ce2O3										
Cm2O3										
Co2O3										
Cr2O3										
Cs2O										
CuO										
Fe2O3										
FeO										
HgO										
K2O										
La2O3										
Li2O										
MgO										
MnO										
MoO3										
Na2O										

STREAM NAME	802	803	804	805	806	807	900	901	902	903
SOLID COMPONENTS										
Chemicals Continued (MT)										
Ni_2O_3										
NpO_2										
HfO_2										
PuO_2										
Rb_2O										
Re_2O_7										
Rh_2O_3										
Ru_2O_3										
SeO_3										
SiO_2										
SO_3										
SrO										
Tc_2O_7										
TeO_3										
ThO_2										
TiO_2										
UO_3										
ZnO										
ZrO_2										
Cement										
Cu										
$CuSO_4$										
Dicyclopentadiene										
Flyash										
Oligomer										
Na Loaded Resin										
Sulfur										

STREAM NAME	904	905	906	907	908	909	910	911	912	913
LIQUID COMPONENTS										
Total Mass Flow (MT)	1.36E+01	1.36E+01	1.36E+01	3.57E+06					4.55E+04	5.72E+05
Volume (L)	1.36E+04	1.36E+04	1.36E+04	3.57E+09					4.55E+07	5.72E+08
Specific Gravity	1.00E+00	1.00E+00	1.00E+00	1.00E+00					1.00E+00	1.00E+00
Radionuclides (Ci)										
Am-241				2.17E-06						
C-14				3.84E+03						
Cs-137				1.06E+04						
Ba-137				1.01E+04						
Np-237				1.91E-09						
Pu-239				4.53E-07						
Pu-240				1.19E-07						
Pu-241				1.33E-06						
Sr-90				5.09E-04						
Y-90				5.09E-04						
Tc-99				6.28E+02						
Total Curies				2.52E+04						
Chemicals (MT)										
Ag+				8.80E-11						
Am+3				6.34E-13						
As+5				1.11E-14						
B+3				9.42E-12						
Ba+2				2.17E-10						
Be+2				6.67E-15						
Bi+3				3.25E-09						
Ca+2				6.10E-07						
Cd+2				1.11E-01						
Ce+3				6.49E-10						
Cm+3				2.61E-17						
Co+3				4.01E-13						
Cs+				6.14E-04						
Cu+2				2.72E-11						
Fe+2				3.28E-13						
Fe+3				9.45E-09						
H+				1.74E+01						
Hg+2				1.60E-11						
K+				2.10E-01						
La+3				6.56E-11						
Mg+2				4.01E-14						
Mn+2				1.33E-14						
Mn+4				2.97E-09						
Mo+6				1.12E-05						
Na+				2.53E+01						
Ni+3				2.25E-09						
Np+4				2.71E-12						
Pb+4				1.39E-01						
Pu+4				7.84E-12						
Rb+				6.59E-14						
Re+7				2.97E-14						
Rh+3				2.34E-13						
Ru+3				1.72E-05						
Se+6				4.85E-06						
Si+4				4.38E-09						
Sr+2				1.05E-10						
Te+6				1.20E-05						
UO2+2				2.91E-08						
Zn+2				2.14E-13						
Zr+4				6.67E-15						
Al(OH)4-				3.44E-06						
HCO2-				1.32E-03						
Cl-				8.08E+01						
CO3-2				1.54E-07						
Cr(OH)4-				1.87E-07						
F-				6.01E+01						
I-				6.67E-02						
NO2-				2.60E-06						
NO3-				7.44E+02						
OH-				5.54E-06						
PO4-3				3.34E+01						
SO4-2				5.55E-07						
TcO4-				5.90E-02						
H2O	1.36E+01	1.36E+01	1.36E+01	6.46E+04					4.55E+04	
Organic Carbon				8.30E-07						
ZrO2:2H2O				2.07E-09						
Hg				9.54E-03						
TcO2				1.44E-03						
Cl2										
CO				2.38E+03						
CO2				1.91E+05						
F2										
H2										
I2										
N2				2.62E+06						4.52E+05
N2O										
NO				2.46E+00						
NO2				1.89E+01						
O2				6.95E+05						1.20E+05
SO2				1.21E+02						
Dicyclopentadiene										
Glycolic Anion				1.55E-17						
H2S				2.86E+01						
Glycolic Acid										
Kerosene										
NH3				1.11E+01						
Oligomer										
Sulfur										

STREAM NAME	904	905	906	907	908	909	910	911	912	913
SOLID COMPONENTS										
Total Mass Flow (MT)		1.37E-01	1.37E-01	6.86E-05						4.60E+02
Radionuclides (Ci)										
Am-241		2.37E-03	2.37E-03	1.19E-06						7.96E+00
C-14										
Cs-137		2.17E-01	2.17E-01	1.08E-04						7.27E+02
Ba-137		2.06E-01	2.06E-01	1.03E-04						6.90E+02
Np-237		2.09E-06	2.09E-06	1.04E-09						7.00E-03
Pu-239		4.94E-04	4.94E-04	2.47E-07						1.66E+00
Pu-240		1.29E-04	1.29E-04	6.47E-08						4.34E-01
Pu-241		1.45E-03	1.45E-03	7.25E-07						4.86E+00
Sr-90		5.56E-01	5.56E-01	2.78E-04						1.86E+03
Y-90		5.56E-01	5.56E-01	2.78E-04						1.86E+03
Tc-99		6.65E-03	6.65E-03	3.33E-06						2.23E+01
Total Curies		1.55E+00	1.55E+00	7.73E-04						5.18E+03
Chemicals (MT)										
Ag+										
Al+3										
Am+3										
As+5										
Ba+2										
Be+2										
Bi+3										
Ca+2										
Cd+2										
Ce+3										
Cm+3										
Co+3										
Cr+3										
Cs+										
Cu+2										
Fe+3										
Hg+2										
K+										
La+3										
Mg+2										
Mn+4										
Mo+6										
Na+										
Ni+3										
Np+4										
Pb+4										
Pu+4										
Rh+3										
Se+6										
Si+4										
Sr+2										
Th+4										
Ti+4										
UO2+2										
Zn+2										
Cl-		4.32E-05	4.32E-05	2.16E-08						1.45E-01
CO3-2										
F-		3.06E-04	3.06E-04	1.53E-07						1.03E+00
I-		6.84E-09	6.84E-09	3.42E-12						2.30E-05
NO2-										
NO3-										
OH-										
PO4-3										
SO4-2										
TcO4-										
Cancrinite										
H2O										
MnO2		5.13E-06	5.13E-06	2.56E-09						1.72E-02
Organic Carbon										
ZrO2:2H2O										
Ag2O		1.03E-07	1.03E-07	5.15E-11						3.46E-04
AlPO4		1.74E-03	1.74E-03	8.71E-07						5.84E+00
Al2O3		6.13E-03	6.13E-03	3.07E-06						2.06E+01
Am2O3		7.60E-10	7.60E-10	3.80E-13						2.55E-06
As2O5		1.87E-11	1.87E-11	9.34E-15						6.26E-08
B2O3		3.28E-08	3.28E-08	1.64E-11						1.10E-04
BaO		2.64E-07	2.64E-07	1.32E-10						8.87E-04
BeO		2.03E-11	2.03E-11	1.02E-14						6.82E-08
Bi2O3		3.95E-06	3.95E-06	1.98E-09						1.32E-02
CaO		1.37E-02	1.37E-02	6.86E-06						4.60E+01
CdO		2.57E-06	2.57E-06	1.29E-09						8.63E-03
Ce2O3		8.34E-07	8.34E-07	4.17E-10						2.80E-03
Cm2O3		3.13E-14	3.12E-14	1.57E-17						1.06E-10
Co2O3		6.15E-10	6.15E-10	3.08E-13						2.06E-06
Cr2O3		1.29E-04	1.29E-04	6.46E-08						4.33E-01
Cs2O		1.32E-08	1.32E-08	6.62E-12						4.44E-05
CuO		6.21E-10	6.21E-10	3.11E-13						1.24E-04
Fe2O3		1.47E-05	1.47E-05	7.38E-09						4.95E-02
FeO		4.59E-10	4.59E-10	2.30E-13						1.54E-06
HgO		6.93E-09	6.93E-09	3.47E-12						2.33E-05
K2O		2.54E-04	2.54E-04	1.27E-07						8.52E-01
La2O3		8.43E-08	8.43E-08	4.22E-11						2.83E-04
Li2O										
MgO		3.20E-10	3.20E-10	1.60E-13						1.07E-06
MnO		1.87E-11	1.87E-11	9.37E-15						6.29E-08
MoO3		3.24E-09	3.24E-09	1.62E-12						1.09E-05
Na2O		3.43E-02	3.43E-02	1.71E-05						1.15E+02

STREAM NAME	904	905	906	907	908	909	910	911	912	913
SOLID COMPONENTS										
Chemicals Continued (MT)										
Nd2O3		3.47E-06	3.47E-06	1.73E-09						1.16E-02
NpO2		3.36E-09	3.36E-09	1.68E-12						1.13E-05
PbO2		3.27E-06	3.27E-06	1.64E-09						1.10E-02
PuO2		9.70E-09	9.70E-09	4.85E-12						3.26E-05
Rb2O		7.86E-11	7.86E-11	3.93E-14						2.64E-07
Re2O7		4.21E-11	4.21E-11	2.11E-14						1.41E-07
Rh2O3		3.18E-10	3.18E-10	1.59E-13						1.07E-06
Ru2O3		4.32E-10	4.32E-10	2.16E-13						1.45E-06
SeO3		1.59E-10	1.59E-10	7.94E-14						5.32E-07
SiO2		8.04E-02	8.04E-02	4.02E-05						2.70E+02
SO3		4.86E-05	4.86E-05	2.43E-08						1.63E-01
SrO		1.35E-07	1.35E-07	6.75E-11						4.53E-04
Tc2O7		6.13E-07	6.13E-07	3.07E-10						2.06E-03
TeO3		3.36E-10	3.36E-10	1.68E-13						1.13E-06
ThO2		5.74E-11	5.74E-11	2.87E-14						1.92E-07
TiO2		4.66E-12	4.66E-12	2.33E-15						1.56E-08
UO3		3.36E-05	3.36E-05	1.68E-08						1.13E-01
ZrO		3.01E-10	3.01E-10	1.51E-13						1.01E-06
ZrO2		1.76E-06	1.76E-06	8.81E-10						5.91E-03
Cement										
Cu										
CuSO4										
Dicyclopentadiene										
Flyash										
Oligomer										
Na Loaded Resin										
Sulfur										

STREAM NAME	914	915	916	917	918	919	920	921	922	923
LIQUID COMPONENTS										
Total Mass Flow (MT)	5.72E+05	4.55E+04	4.55E+04	5.72E+05					5.87E-02	5.87E-02
Volume (L)	5.72E+08	4.55E+07	4.55E+07	5.72E+08					5.87E+01	5.87E+01
Specific Gravity	1.00E+00	1.00E+00	1.00E+00	1.00E+00					1.00E+00	1.00E+00
Radionuclides (Ci)										
Am-241										
C-14										
Cs-137										
Ba-137										
Np-237										
Pu-239										
Pu-240										
Pu-241										
Sr-90										
Y-90										
Tc-99										
Total Curies										
Chemicals (MT)										
Ag+										
Am+3										
As+5										
B+3										
Ba+2										
Be+2										
Bi+3										
Ca+2										
Cd+2										
Ce+3										
Cm+3										
Co+3										
Cs+										
Cu+2										
Fe+2										
Fe+3										
H+										
Hg+2										
K+										
La+3										
Mg+2										
Mn+2										
Mn+4										
Mo+6										
Na+										
Ni+3										
Np+4										
Pb+4										
Pu+4										
Ro+										
Ra+7										
Rh+3										
Ru+3										
Se+6										
Si+4										
Sr+2										
Te+6										
UO2+2										
Zn+2										
Zr+4										
Al(OH)4-										
BO2-										
Cl-										
CO3-2										
Cr(OH)4-										
F-										
I-										
NO2-										
NO3-										
OH-										
PO4-3										
SO4-2										
TcO4-										
H2O		4.55E+04	4.55E+04						5.87E-02	5.87E-02
Organic Carbon										
ZrO2:2H2O										
Hg										
TcO2										
Cl2										
CO										
CO2										
F2										
H2										
I2										
N2	4.52E+05			4.52E+05						
N2O										
NO										
NO2										
O2	1.20E+05			1.20E+05						
SO2										
Dicyclopentadiene										
Glycolic Anion										
H2S										
Glycolic Acid										
Kerosene										
NH3										
Oligomer										
Sulfur										

STREAM NAME	914	915	916	917	918	919	920	921	922	923
SOLID COMPONENTS										
Total Mass Flow (MT)	4.60E+02	4.60E+02	4.60E+02	2.30E-01						5.93E-04
Radionuclides (Ci)										
Am-241	7.96E+00	7.95E+00	7.95E+00	3.98E-03						2.36E-03
C-14										5.46E-07
Cs-137	7.27E+02	7.26E+02	7.26E+02	3.63E-01						8.24E-01
Ba-137	6.90E+02	6.90E+02	6.90E+02	3.45E-01						7.83E-01
Np-237	7.00E-03	7.00E-03	7.00E-03	3.50E-06						1.53E-06
Pu-239	1.66E+00	1.66E+00	1.66E+00	8.29E-04						6.18E-04
Pu-240	4.34E-01	4.33E-01	4.33E-01	2.17E-04						1.54E-04
Pu-241	4.86E+00	4.86E+00	4.86E+00	2.43E-03						1.73E-03
Sr-90	1.86E+03	1.86E+03	1.86E+03	9.32E-01						1.25E+00
Y-90	1.86E+03	1.86E+03	1.86E+03	9.32E-01						1.25E+00
Tc-99	2.23E+01	2.23E+01	2.23E+01	1.12E-02						2.26E-04
Total Curies	5.18E+03	5.18E+03	5.18E+03	2.59E+00						4.10E+00
Chemicals (MT)										
Ag+										3.70E-10
Al+3										1.86E-07
Am+3										7.03E-12
As+5										5.66E-13
Ba+2										9.35E-10
Be+2										7.69E-13
Bi+3										6.29E-08
Ca+2										3.62E-08
Cd+2										1.64E-09
Ce+3										5.88E-08
Cm+3										4.39E-15
Co+3										3.71E-16
Cr+3										1.45E-08
Cs+										5.02E-11
Cu+2										4.71E-11
Fe+3										1.91E-07
Hg+2										2.20E-11
K+										7.40E-09
La+3										5.73E-09
Mg+2										2.06E-09
Mn+4										4.50E-08
Mo+6										8.03E-12
Na+										1.46E-07
Ni+3										5.15E-08
Np+4										2.22E-11
Pb+4										7.32E-09
Pu+4										1.09E-10
Rh+3										4.81E-11
Se+6										8.28E-10
Si+4										5.79E-08
Sr+2										9.13E-09
Th+4										6.97E-10
Ti+4										3.86E-11
UO2+2										3.86E-07
Zn+2										1.27E-10
Cl-	1.45E-01	1.45E-01	1.45E-01	7.25E-05						3.30E-07
CO3-2										2.72E-08
F-	1.03E+00	1.03E+00	1.03E+00	5.14E-04						1.85E-06
I-	2.30E-05	2.30E-05	2.30E-05	1.15E-08						3.49E-13
NO2-										1.54E-08
NO3-										2.46E-07
OH-										6.52E-07
PO4-3										1.21E-07
SO4-2										6.39E-09
TcO4-										2.27E-10
Cancrinite										6.76E-07
H2O										
MnO2	1.72E-02	1.72E-02	1.72E-02	8.60E-06						6.89E-06
Organic Carbon										2.18E-08
ZrO2;2H2O										2.99E-07
Ag2O	3.46E-04	3.45E-04	3.45E-04	1.73E-07						3.85E-08
AlPO4	5.84E+00	5.84E+00	5.84E+00	2.92E-03						1.60E-05
Al2O3	2.06E+01	2.05E+01	2.05E+01	1.03E-02						4.80E-05
Am2O3	2.55E-06	2.55E-06	2.55E-06	1.27E-09						7.48E-10
As2O5	6.26E-08	6.26E-08	6.26E-08	3.13E-11						8.39E-11
B2O3	1.10E-04	1.10E-04	1.10E-04	5.49E-08						4.15E-05
BaO	8.87E-04	8.86E-04	8.86E-04	4.43E-07						1.01E-07
BeO	6.82E-08	6.82E-08	6.82E-08	3.41E-11						2.06E-10
Bi2O3	1.32E-02	1.32E-02	1.32E-02	6.62E-06						6.78E-06
CaO	4.60E+01	4.60E+01	4.60E+01	2.30E-02						4.94E-06
CdO	8.63E-03	8.63E-03	8.63E-03	4.32E-06						1.82E-07
Ce2O3	2.80E-03	2.80E-03	2.80E-03	1.40E-06						6.66E-06
Cm2O3	1.06E-10	1.06E-10	1.06E-10	5.30E-14						4.65E-13
Co2O3	2.06E-06	2.06E-06	2.06E-06	1.03E-09						3.86E-13
Cr2O3	4.33E-01	4.33E-01	4.33E-01	2.17E-04						2.12E-06
Cs2O	4.44E-05	4.44E-05	4.44E-05	2.22E-08						5.10E-08
CuO	1.24E-04	1.24E-04	1.24E-04	6.22E-08						5.72E-09
Fe2O3	4.95E-02	4.94E-02	4.94E-02	2.47E-05						2.64E-05
FeO	1.54E-06	1.54E-06	1.54E-06	7.70E-10						2.51E-13
HgO	2.33E-05	2.32E-05	2.32E-05	1.16E-08						
K2O	8.52E-01	8.51E-01	8.51E-01	4.26E-04						1.08E-06
La2O3	2.83E-04	2.83E-04	2.83E-04	1.41E-07						6.50E-07
Li2O										1.19E-05
MgO	1.07E-06	1.07E-06	1.07E-06	5.36E-10						3.68E-07
MnO	6.29E-08	6.28E-08	6.28E-08	3.14E-11						1.02E-14
MoO3	1.09E-05	1.09E-05	1.09E-05	5.44E-09						1.17E-09
Na2O	1.15E+02	1.15E+02	1.15E+02	5.75E-02						7.01E-05

STREAM NAME	914	915	916	917	918	919	920	921	922	923
SOLID COMPONENTS										
Chemicals Continued (MT)										
Nd2O3	1.16E-02	1.16E-02	1.16E-02	5.81E-06						7.02E-06
NpO2	1.13E-05	1.13E-05	1.13E-05	5.63E-09						2.44E-09
PbO2	1.10E-02	1.10E-02	1.10E-02	5.49E-06						8.19E-07
PuO2	3.26E-05	3.25E-05	3.25E-05	1.63E-08						1.20E-08
Rb2O	2.64E-07	2.63E-07	2.63E-07	1.32E-10						4.29E-14
Re2O7	1.41E-07	1.41E-07	1.41E-07	7.06E-11						2.30E-14
Rh2O3	1.07E-06	1.07E-06	1.07E-06	5.34E-10						5.74E-09
Ru2O3	1.45E-06	1.45E-06	1.45E-06	7.25E-10						2.39E-13
SeO3	5.32E-07	5.32E-07	5.32E-07	2.66E-10						1.29E-07
SiO2	2.70E+02	2.70E+02	2.70E+02	1.35E-01						2.72E-04
SO3	1.63E-01	1.63E-01	1.63E-01	8.15E-05						4.37E-07
SrO	4.53E-04	4.52E-04	4.52E-04	2.26E-07						1.04E-06
Tc2O7	2.06E-03	2.06E-03	2.06E-03	1.03E-06						2.06E-08
TeO3	1.13E-06	1.13E-06	1.13E-06	5.63E-10						1.86E-13
ThO2	1.92E-07	1.92E-07	1.92E-07	9.62E-11						7.67E-08
TiO2	1.56E-08	1.56E-08	1.56E-08	7.81E-12						6.23E-09
UO3	1.13E-01	1.13E-01	1.13E-01	5.64E-05						3.95E-05
ZnO	1.01E-06	1.01E-06	1.01E-06	5.05E-10						1.52E-08
ZrO2	5.91E-03	5.91E-03	5.91E-03	2.95E-06						2.24E-05
Cement										
Cu										
CuSO4										
Dicyclopentadiene										
Flyash										
Oligomer										
Na Loaded Resin										
Sulfur										

STREAM NAME	924	1000	1001	1002	1003	1004	1005	1006	1007	1008
LIQUID COMPONENTS										
Total Mass Flow (MT)	7.53E+03			6.50E+01	1.36E+05	3.59E+03	3.59E+03	6.12E+04	4.97E+04	2.41E+03
Volume (L)	7.53E+06			1.71E+04	1.36E+08	3.59E+06	3.59E+06	3.98E+07	3.57E+07	2.41E+06
Specific Gravity	1.00E+00			3.80E+00	1.00E+00	1.00E+00	1.00E+00	1.54E+00	1.39E+00	1.00E+00
Radionuclides (Ci)										
Am-241	2.67E-05									
C-14	2.57E+03									
Cs-137	1.55E+01									
Ba-137	1.48E+01									
Np-237	2.35E-08									
Pu-239	5.57E-06									
Pu-240	1.46E-06									
Pu-241	1.63E-05									
Sr-90	6.26E-03									
Y-90	6.26E-03									
Tc-99	2.23E+02									
Total Curies	2.82E+03									
Chemicals (MT)										
Ag+	1.08E-09									
Am+3	7.79E-12									
As+5	1.37E-13									
B+3	1.16E-10									
Ba+2	2.67E-09									
Be+2	8.20E-14									
Bi+3	3.99E-08									
Ca+2	5.57E-08									
Cd+2	2.58E-08									
Ce+3	7.99E-09									
Cm+3	3.21E-16									
Co+3	4.94E-12									
Cs+	8.95E-07									
Cu+2	3.34E-10									
Fe+2	4.03E-12									
Fe+3	1.16E-07									
H+	1.28E-02								4.50E+02	
Hg+2	1.97E-10									
K+	3.78E-06									
La+3	8.06E-10									
Mg+2	4.93E-13									
Mn+2	1.64E-13									
Mn+4	3.65E-08									
Mo+6	2.44E-11									
Na+	5.54E-04			2.18E+01				1.76E+04		
Ni+3	2.77E-08									
Np+4	3.34E-11									
Pb+4	3.25E-08									
Pu+4	9.65E-11									
Rb+	8.11E-13									
Re+7	3.65E-13									
Rh+3	2.87E-12									
Ru+3	4.00E-12									
Se+6	4.55E-13									
Si+4	5.39E-08									
Sr+2	1.29E-09									
Te+6	2.79E-12									
UO2+2	3.58E-07									
Zn+2	2.63E-12									
Zr+4	8.20E-14									
Al(OH)4-	4.28E-05									
BO2-	5.29E-16									
Cl-	2.29E-06									
CO3-2	7.20E-10									
Cr(OH)4-	2.33E-06									
F-	3.84E-06									
I-	3.05E-10									
NO2-	2.68E-05			4.32E+01						
NO3-	6.18E-01								2.79E+04	
OH-	1.19E-08							1.30E+04		
PO4-3	1.56E-05									
SO4-2	1.05E-01									
TcO4-	2.09E-02									
H2O	4.06E+02							3.06E+04	2.14E+04	
Organic Carbon	2.50E-05									
ZrO2:2H2O	2.55E-08									
Hg	1.44E-02									
TcO2	5.98E-04									
Cl2	1.36E-02									
CO										
CO2	5.38E+03									
F2	7.60E-02									
H2										
I2	2.01E-03									
N2	1.84E+02									
N2O	1.71E+01									
NO	1.24E+03									
NO2	1.46E+02									
O2	1.49E+02									
SO2	1.16E+01									
Dicyclopentadiene						3.59E+03				
Glycolic Anion	1.47E-02									
H2S										
Glycolic Acid										
Kerosene										
NH3	3.66E+00									2.41E+03
Oligomer							3.59E+03			
Sulfur					1.36E+05					

STREAM NAME	924	1000	1001	1002	1003	1004	1005	1006	1007	1008
SOLID COMPONENTS										
Total Mass Flow (MT)	2.97E-07	6.25E+01	7.75E+02							
Radionuclides (Ci)										
Am-241	1.18E-06									
C-14	2.73E-10									
Cs-137	4.12E-04									
Ba-137	3.92E-04									
Np-237	7.66E-10									
Pu-239	3.09E-07									
Pu-240	7.68E-08									
Pu-241	8.64E-07									
Sr-90	6.23E-04									
Y-90	6.23E-04									
Tc-99	1.13E-07									
Total Curies	2.05E-03									
Chemicals (MT)										
Ag+	1.85E-13									
Al+3	9.32E-11									
Am+3	3.52E-15									
As+5	2.83E-16									
Ba+2	4.68E-13									
Be+2	3.85E-16									
Bi+3	3.14E-11									
Ca+2	1.81E-11									
Cd+2	8.19E-13									
Ce+3	2.94E-11									
Cm+3	2.19E-18									
Co+3	1.86E-19									
Cr+3	7.24E-12									
Cs+	2.51E-14									
Cu+2	2.35E-14									
Fe+3	9.53E-11									
Hg+2	1.10E-14									
K+	3.70E-12									
La+3	2.87E-12									
Mg+2	1.03E-12									
Mn+4	2.25E-11									
Mo+6	4.02E-15									
Na+	7.30E-11									
Ni+3	2.58E-11									
Np+4	1.11E-14									
Pb+4	3.66E-12									
Pu+4	5.46E-14									
Rh+3	2.41E-14									
Se+6	4.14E-13									
Si+4	2.90E-11									
Sr+2	4.57E-12									
Th+4	3.49E-13									
Ti+4	1.93E-14									
UO2+2	1.93E-10									
Zn+2	6.33E-14									
Cl-	1.65E-10									
CO3-2	1.36E-11									
F-	9.25E-10									
I-	1.74E-16									
NO2-	7.72E-12									
NO3-	1.23E-10									
OH-	3.26E-10									
PO4-3	6.07E-11									
SO4-2	3.20E-12									
TcO4-	1.13E-13									
Cancrinite	3.38E-10									
H2O										
MnO2	3.44E-09									
Organic Carbon	1.09E-11									
ZrO2:2H2O	1.49E-10									
Ag2O	1.93E-11									
AlPO4	8.02E-09									
Al2O3	2.40E-08									
Am2O3	3.74E-13									
As2O5	4.20E-14									
B2O3	2.08E-08	1.31E+01								
BaO	5.06E-11									
BeO	1.03E-13									
Bi2O3	3.39E-09									
CaO	2.47E-09	1.51E+00								
CdO	9.12E-11									
Ce2O3	3.33E-09									
Cm2O3	2.33E-16									
Co2O3	1.93E-16									
Cr2O3	1.06E-09									
Cs2O	2.55E-11									
CuO	2.86E-12									
Fe2O3	1.32E-08									
FeO	1.25E-16									
HgO										
K2O	5.41E-10									
La2O3	3.25E-10									
Li2O	5.93E-09	3.09E+00								
MgO	1.84E-10	1.51E+00								
MnO	5.11E-18									
MnO3	5.84E-13									
Na2O	3.51E-08									

STREAM NAME	924	1000	1001	1002	1003	1004	1005	1006	1007	1008
SOLID COMPONENTS										
Chemicals Continued (MT)										
Ni2O3	3.51E-09									
NpO2	1.22E-12									
PbO2	4.10E-10									
PuO2	5.99E-12									
Rb2O	2.14E-17									
Re2O7	1.15E-17									
Rh2O3	2.87E-12									
Ru2O3	1.20E-16									
SeO3	6.44E-11									
SiO2	1.36E-07	4.32E+01								
SO3	2.19E-10									
SrO	5.20E-10									
Tc2O7	1.03E-11									
TeO3	9.30E-17									
ThO2	3.84E-11									
TiO2	3.12E-12									
UO3	1.98E-08									
ZnO	7.62E-12									
ZrO2	1.12E-08									
Cement										
Cu										
CuSO4										
Dicyclopentadiene										
Flyash										
Oligomer										
Na Loaded Resin			7.75E+02							
Sulfur										

STREAM NAME	1009	1010	1011	1012	1013	1014	1015	1016	1020	1021
LIQUID COMPONENTS										
Total Mass Flow (MT)	1.20E+04		5.84E+04	7.01E+05	6.04E+03					
Volume (L)	1.20E+07		5.84E+07	7.01E+08	6.04E+06					
Specific Gravity	1.00E+00		1.00E+00	1.00E+00	1.00E+00					
Radionuclides (Ci)										
Am-241										
C-14										
Cs-137										
Ba-137										
Np-237										
Pu-239										
Pu-240										
Pu-241										
Sr-90										
Y-90										
Tc-99										
Total Curies										
Chemicals (MT)										
Ag+										
Am+3										
As+5										
B+3										
Ba+2										
Be+2										
Bi+3										
Ca+2										
Cd+2										
Ce+3										
Cm+3										
Co+3										
Cs+										
Cu+2										
Fe+2										
Fe+3										
H+										
Hg+2										
K+										
La+3										
Mg+2										
Mn+2										
Mn+4										
Mo+6										
Na+										
Ni+3										
Np+4										
Pb+4										
Pu+4										
Rb+										
Re+7										
Rh+3										
Ru+3										
Se+6										
Si+4										
Sr+2										
Te+6										
UO2+2										
Zn+2										
Zr+4										
Al(OH)4-										
HCO2-										
Cl-										
CO3-2										
Cr(OH)4-										
F-										
I-										
NO2-										
NO3-										
OH-										
PO4-3										
SO4-2										
TcO4-										
H2O				7.01E+05	1.78E+03					
Organic Carbon										
ZrO2:2H2O										
Hg										
TcO2										
Cl2										
CO										
CO2										
F2										
H2										
I2										
N2										
N2O										
NO										
NO2										
O2	1.20E+04									
SO2										
Dicyclopentadiene										
Glycolic Anion										
H2S										
Glycolic Acid					4.27E+03					
Kerosene			5.84E+04							
NH3										
Oligomer										
Sulfur										

STREAM NAME	1009	1010	1011	1012	1013	1014	1015	1016	1020	1021
SOLID COMPONENTS										
Total Mass Flow (MT)						5.55E+03	1.68E+03	1.68E+03	2.76E+05	1.61E+04
Radionuclides (Ci)										
Am-241										
C-14										
Cs-137										
Ba-137										
Np-237										
Pu-239										
Pu-240										
Pu-241										
Sr-90										
Y-90										
Tc-99										
Total Curies										
Chemicals (MT)										
Ag+										
Al+3										
Am+3										
As+5										
Ba+2										
Be+2										
Bi+3										
Ca+2						3.00E+03				
Cd+2										
Ce+3										
Cm+3										
Co+3										
Cr+3										
Cs+										
Cu+2										
Fe+3										
Hg+2										
K+										
La+3										
Mg+2										
Mn+4										
Mo+6										
Na+										
Ni+3										
Np+4										
Pb+4										
Pu+4										
Rh+3										
Se+6										
Si+4										
Sr+2										
Th+4										
Ti+4										
UO2+2										
Zn+2										
Cl-										
CO3-2										
F-										
I-										
NO2-										
NO3-										
OH-						2.55E+03				
PO4-3										
SO4-2										
TcO4-										
Cancrinite										
H2O										
MnO2										
Organic Carbon										
ZrO2:2H2O										
Ag2O										
AlPO4										
Al2O3										1.61E+04
Am2O3										
As2O5										
B2O3										
BaO										
BeO										
Bi2O3										
CaO										
CdO										
Ce2O3										
Cm2O3										
Co2O3										
Cr2O3										
Cs2O										
CuO										
Fe2O3										
FeO										
HgO										
K2O										
La2O3										
Li2O										
MgO										
MnO										
MoO3										
Na2O										

STREAM NAME	1009	1010	1011	1012	1013	1014	1015	1016	1020	1021
SOLID COMPONENTS										
Chemicals Continued (MT)										
Ni2O3										
NpO2										
P5O2										
PuO2										
Rh2O										
Re2O7										
Rh2O3										
Ru2O3										
SeO3										
SiO2									2.76E+05	
SO3										
SrO										
Tc2O7										
TeO3										
ThO2										
TiO2										
UO3										
ZrO										
ZrO2										
Cement								1.68E+03		
Cu										
CuSO4										
Dicyclopentadiene										
Flyash							1.68E+03			
Oligomer										
Na Loaded Resin										
Sulfur										

STREAM NAME	1022	1023	1024	1025	1026	1030	1031	1032	1033	1034
LIQUID COMPONENTS										
Total Mass Flow (MT)						1.29E+05	1.29E+05	1.29E+05	1.29E+05	1.29E+05
Volume (L)						1.29E+08	1.29E+08	1.29E+08	1.29E+08	1.29E+08
Specific Gravity						1.00E+00	1.00E+00	1.00E+00	1.00E+00	1.00E+00
Radionuclides (Ci)										
Am-241										
C-14										
Cs-137										
Ba-137										
Np-237										
Pu-239										
Pu-240										
Pu-241										
Sr-90										
Y-90										
Tc-99										
Total Curies										
Chemicals (MT)										
Ag+										
Au+3										
As+5										
B+3										
Ba+2										
Be+2										
Bi+3										
Ca+2										
Cd+2										
Ce+3										
Cm+3										
Co+3										
Cs+										
Cu+2										
Fe+2										
Fe+3										
H+										
Hg+2										
K+										
La+3										
Mg+2										
Mn+2										
Mn+4										
Mo+6										
Na+										
Ni+3										
Np+4										
Pb+4										
Pu+4										
Rb+										
Re+7										
Rh+3										
Ru+3										
Se+6										
Si+4										
Sr+2										
Te+6										
UO2+2										
Zn+2										
Zr+4										
Al(OH)4-										
HO2-										
Cl-										
CO3-2										
Cr(OH)4-										
F-										
I-										
NO2-										
NO3-										
OH-										
PO4-3										
SO4-2										
TcO4-										
H2O										
Organic Carbon										
ZrO2;2H2O										
Hg										
TcO2										
CL2										
CO										
CO2										
F2										
H2										
I2										
N2						9.43E+03	9.43E+03	9.43E+03	9.43E+03	9.43E+03
N2O										
NO										
NO2										
O2						1.20E+05	1.20E+05	1.20E+05	1.20E+05	1.20E+05
SO2										
Dicyclopentadiene										
Glycolic Anion										
H2S										
Glycolic Acid										
Kerosene										
NH3										
Oligomer										
Sulfur										

STREAM NAME	1022	1023	1024	1025	1026	1030	1031	1032	1033	1034
SOLID COMPONENTS										
Total Mass Flow (MT)		1.69E+03	4.82E+02	4.10E+04						
Radionuclides (Ci)										
Am-241										
C-14										
Cs-137										
Ba-137										
Np-237										
Pu-239										
Pu-240										
Pu-241										
Sr-90										
Y-90										
Tc-99										
Total Curies										
Chemicals (MT)										
Ag+										
Al+3										
Am+3										
As+5										
Ba+2										
Be+2										
Bi+3										
Ca+2										
Cd+2										
Ce+3										
Cm+3										
Co+3										
Cr+3										
Cs+										
Cu+2										
Fe+3										
Hg+2										
K+										
La+3										
Mg+2										
Mn+4										
Mo+6										
Na+										
Ni+3										
Np+4										
Pb+4										
Pu+4										
Rh+3										
Se+6										
Si+4										
Sr+2										
Th+4										
Ti+4										
UO2+2										
Zn+2										
Cl-										
CO3-2										
F-										
I-										
NO2-										
NO3-										
OH-										
PO4-3										
SO4-2										
TcO4-										
Cancrinite										
H2O										
MnO2										
Organic Carbon										
ZrO2:2H2O										
Ag2O										
AlPO4										
Al2O3										
Am2O3										
As2O5										
B2O3		1.69E+03								
BaO										
BeO										
Bi2O3										
CaO				4.10E+04						
CdO										
Ce2O3										
Cm2O3										
Co2O3										
Cr2O3										
Cs2O										
CuO										
Fe2O3										
FeO										
HgO										
K2O										
La2O3										
Li2O			4.82E+02							
MgO										
MnO										
MoO3										
Na2O										

STREAM NAME	1022	1023	1024	1025	1026	1030	1031	1032	1033	1034
SOLID COMPONENTS										
Chemicals Continued (MT)										
Nb_2O_3										
NpO_2										
PbO_2										
PuO_2										
Rb_2O										
Re_2O_7										
Rh_2O_3										
Ru_2O_3										
SeO_3										
SiO_2										
SO_3										
SrO										
Tc_2O_7										
TeO_3										
ThO_2										
TiO_2										
UO_3										
ZnO										
ZrO_2										
Cement										
Cu										
$CuSO_4$										
Dicyclopentadiene										
Flyash										
Oligomer										
Na Loaded Resin										
Sulfur										

STREAM NAME	1035	1036	1037	1038	1039	1040	1041	1042	1100	1101
LIQUID COMPONENTS										
Total Mass Flow (MT)	3.23E+04	9.66E+04	9.66E+04	9.66E+04	2.31E+04	3.23E+04		3.23E+04	1.05E+05	
Volume (L)	3.23E+07	9.66E+07	9.66E+07	9.66E+07	2.31E+07	3.23E+07		3.23E+07	9.91E+07	
Specific Gravity	1.00E+00	1.00E+00	1.00E+00	1.00E+00	1.00E+00	1.00E+00		1.00E+00	1.05E+00	
Radionuclides (Ci)										
Am-241										
C-14										
Cs-137									9.08E+04	
Ba-137									8.63E+04	
Np-237										
Pu-239										
Pu-240										
Pu-241										
Sr-90										
Y-90										
Tc-99									5.36E+03	
Total Curies									1.83E+05	
Chemicals (MT)										
Ag+										
Am+3										
As+5										
B+3										
Ba+2										
Be+2										
Bi+3										
Ca+2										
Cd+2									9.44E-01	
Ce+3										
Cm+3										
Co+3										
Cs+									5.24E-03	
Cu+2										
Fe+2										
Fe+3										
H+									1.50E+02	
Hg+2										
K+									1.79E+00	
La+3										
Mg+2										
Mn+2										
Mn+4										
Mo+6									9.56E-05	
Na+									2.16E+02	
Ni+3										
Np+4										
Pb+4									1.19E+00	
Pu+4										
Rb+										
Re+7										
Rh+3										
Ru+3									1.47E-04	
Se+6									4.14E-05	
Si+4										
Sr+2										
Te+6									1.02E-04	
UO2+2										
Zn+2										
Zr+4										
AL(OH)4-										
BO2-									1.13E-02	
Cl-									6.90E+02	
CO3-2										
Cr(OH)4-										
F-									5.13E+02	
I-									5.69E-01	
NO2-										
NO3-									6.42E+03	
OH-										
PO4-3									2.85E+02	
SO4-2										
TcO4-									5.19E-01	
H2O									9.62E+04	
Organic Carbon										
ZrO2:2H2O										
Hg									5.47E-01	
TcO2										
Cl2										
CO										
CO2										
F2										
H2										
I2										
N2	9.20E+03	2.23E+02	2.23E+02	2.23E+02		9.20E+03		9.20E+03		
N2O										
NO										
NO2										
O2	2.31E+04	9.64E+04	9.64E+04	9.64E+04	2.31E+04	2.31E+04		2.31E+04		
SO2										
Dicyclopentadiene										
Glycolic Anion										
H2S										
Glycolic Acid										
Kerosene										
NH3										
Oligomer										
Sulfur										

STREAM NAME	1035	1036	1037	1038	1039	1040	1041	1042	1100	1101
SOLID COMPONENTS										
Total Mass Flow (MT)									2.30E+03	
Radionuclides (Ci)										
Am-241									3.98E+01	
C-14										
Cs-137									3.64E+03	
Ba-137									3.46E+03	
Np-237									3.50E-02	
Pu-239									8.30E+00	
Pu-240									2.17E+00	
Pu-241									2.43E+01	
Sr-90									9.33E+03	
Y-90									9.33E+03	
Tc-99									1.12E+02	
Total Curies									2.59E+04	
Chemicals (MT)										
Ag+										
Al+3										
Am+3										
As+5										
Ba+2										
Be+2										
Bi+3										
Ca+2										
Cd+2										
Ce+3										
Cm+3										
Co+3										
Cr+3										
Cs+										
Cu+2										
Fe+3										
Hg+2										
K+										
La+3										
Mg+2										
Mn+4										
Mo+6										
Na+										
Ni+3										
Np+4										
Pb+4										
Pu+4										
Rh+3										
Se+6										
Si+4										
Sr+2										
Th+4										
Ti+4										
UO2+2										
Zn+2										
Cl-									7.26E-01	
CO3-2										
F-									5.14E+00	
I-									1.15E-04	
NO2-										
NO3-										
OH-										
PO4-3										
SO4-2										
TcO4-										
Cancrinite										
H2O										
MnO2									8.61E-02	
Organic Carbon										
ZrO2:2H2O										
Ag2O									1.73E-03	
AlPO4									2.92E+01	
Al2O3									1.03E+02	
Am2O3									1.28E-05	
As2O5									3.14E-07	
B2O3									5.50E-04	
BaO									4.44E-03	
BeO									3.41E-07	
Bi2O3									6.63E-02	
CaO									2.30E+02	
CdO									4.32E-02	
Ce2O3									1.40E-02	
Cm2O3									5.30E-10	
Co2O3									1.03E-05	
Cr2O3									2.17E+00	
Cs2O									2.22E-04	
CuO									6.23E-04	
Fe2O3									2.48E-01	
FeO									7.71E-06	
HgO									1.16E-04	
K2O									4.27E+00	
La2O3									1.42E-03	
Li2O										
MgO									5.37E-06	
MnO									3.15E-07	
MoO3									5.45E-05	
Na2O									5.76E+02	

STREAM NAME	1035	1036	1037	1038	1039	1040	1041	1042	1100	1101
SOLID COMPONENTS										
Chemicals Continued (MT)										
Nd_2O_3									5.82E-02	
Np_2O_2									5.64E-05	
HfO_2									5.49E-02	
PuO_2									1.63E-04	
Rb_2O									1.32E-06	
Re_2O_7									7.07E-07	
Rh_2O_3									5.34E-06	
Ru_2O_3									7.26E-06	
SeO_3									2.67E-06	
SiO_2									1.35E+03	
SO_3									8.16E-01	
SrO									2.27E-03	
Tc_2O_7									1.03E-02	
TeO_3									5.64E-06	
ThO_2									9.63E-07	
TiO_2									7.82E-08	
UO_3									5.65E-01	
ZnO									5.06E-06	
ZrO_2									2.96E-02	
Cement										
Cu										
$CuSO_4$										
Dicyclopentadiene										
Flyash										
Oligomer										
Na Loaded Resin										
Sulfur										

STREAM NAME	1102	1103	1104	1105	1106	1107	1108	1109	1110	1111
LIQUID COMPONENTS										
Total Mass Flow (MT)	1.05E+05	8.16E+04	8.16E+04	2.29E+04	2.29E+04	7.16E+03	1.57E+04	2.02E+03	1.37E+04	1.37E+04
Volume (L)	9.91E+07	7.97E+07	7.97E+07	1.94E+07	1.94E+07	4.51E+06	1.49E+07	1.47E+06	1.34E+07	1.34E+07
Specific Gravity	1.05E+00	1.02E+00	1.02E+00	1.18E+00	1.18E+00	1.59E+00	1.06E+00	1.38E+00	1.02E+00	1.02E+00
Radionuclides (Ci)										
Am-241										
C-14										
Cs-137	9.08E+04	3.23E-02	3.23E-02	9.08E+04	9.08E+04	9.08E+04				
Ba-137	8.63E+04	3.07E-02	3.07E-02	8.63E+04	8.63E+04	8.63E+04				
Np-237										
Pu-239										
Pu-240										
Pu-241										
Sr-90										
Y-90										
Tc-99	5.36E+03	1.91E-03	1.91E-03	5.36E+03	5.36E+03	5.36E+03				
Total Curies	1.83E+05	6.49E-02	6.49E-02	1.83E+05	1.83E+05	1.83E+05				
Chemicals (MT)										
Ag+										
Am+3										
As+5										
B+3										
Ba+2										
Be+2										
Bi+3										
Ca+2										
Cd+2	9.44E-01	3.36E-07	3.36E-07	9.44E-01	9.44E-01	9.44E-01				
Ce+3										
Cm+3										
Co+3										
Cs+	5.24E-03	1.86E-09	1.86E-09	5.24E-03	5.24E-03	5.24E-03				
Cu+2										
Fe+2										
Fe+3										
H+	1.50E+02	4.38E+01	4.38E+01	1.06E+02	1.06E+02	8.43E+01	2.18E+01	1.56E+01	6.15E+00	6.15E+00
Hg+2										
K+	1.79E+00	6.36E-07	6.36E-07	1.79E+00	1.79E+00	1.79E+00				
La+3										
Mg+2										
Mn+2										
Mn+4										
Mo+6	9.56E-05	3.40E-11	3.40E-11	9.56E-05	9.56E-05	9.56E-05				
Na+	2.16E+02	7.67E-05	7.67E-05	2.16E+02	2.16E+02	2.16E+02				
Ni+3										
Np+4										
Pb+4	1.19E+00	4.23E-07	4.23E-07	1.19E+00	1.19E+00	1.19E+00				
Pu+4										
Rb+										
Re+7										
Rh+3										
Ru+3	1.47E-04	5.21E-11	5.21E-11	1.47E-04	1.47E-04	1.47E-04				
Se+6	4.14E-05	1.47E-11	1.47E-11	4.14E-05	4.14E-05	4.14E-05				
Si+4										
Sr+2										
Te+6	1.02E-04	3.64E-11	3.64E-11	1.02E-04	1.02E-04	1.02E-04				
UO2+2										
Zn+2										
Zr+4										
Al(OH)4-										
BO2-	1.13E-02	4.01E-09	4.01E-09	1.13E-02	1.13E-02	1.13E-02				
Cl-	6.90E+02	1.72E+02	1.72E+02	5.17E+02	5.17E+02	5.17E-01	5.17E+02	4.49E+02	6.72E+01	6.72E+01
CO3-2										
Cr(OH)4-										
F-	5.13E+02	3.79E+02	3.79E+02	1.33E+02	1.33E+02	1.33E-01	1.33E+02	5.33E+01	7.99E+01	7.99E+01
I-	5.69E-01	2.02E-07	2.02E-07	5.69E-01	5.69E-01	5.69E-01				
NO2-										
NO3-	6.42E+03	1.16E+03	1.16E+03	5.26E+03	5.26E+03	5.26E+03	1.84E+00	1.70E+00	1.47E-01	1.47E-01
OH-										
PO4-3	2.85E+02	1.01E-04	1.01E-04	2.85E+02	2.85E+02	2.85E+02				
SO4-2										
TcO4-	5.19E-01	1.85E-07	1.85E-07	5.19E-01	5.19E-01	5.19E-01				
H2O	9.62E+04	7.98E+04	7.98E+04	1.64E+04	1.64E+04	1.31E+03	1.50E+04	1.50E+03	1.35E+04	1.35E+04
Organic Carbon										
ZrO2:2H2O										
Hg	5.47E-01	1.95E-07	1.95E-07	5.47E-01	5.47E-01	5.47E-01				
TcO2										
Cl2										
CO										
CO2										
F2										
H2										
T2										
N2										
N2O										
NO										
NO2										
O2										
SO2										
Dicyclopentadiene										
Glycolic Anion										
H2S										
Glycolic Acid										
Kerosene										
NH3										
Oligomer										
Sulfur										

STREAM NAME	1102	1103	1104	1105	1106	1107	1108	1109	1110	1111
SOLID COMPONENTS										
Total Mass Flow (MT)	2.30E+03			2.30E+03	2.30E+03	2.30E+03				
Radionuclides (Ci)										
Am-241	3.98E+01			3.98E+01	3.98E+01	3.98E+01				
C-14										
Cs-137	3.64E+03			3.64E+03	3.64E+03	3.64E+03				
Ba-137	3.46E+03			3.46E+03	3.46E+03	3.46E+03				
Np-237	3.50E-02			3.50E-02	3.50E-02	3.50E-02				
Pu-239	8.30E+00			8.30E+00	8.30E+00	8.30E+00				
Pu-240	2.17E+00			2.17E+00	2.17E+00	2.17E+00				
Pu-241	2.43E+01			2.43E+01	2.43E+01	2.43E+01				
Sr-90	9.33E+03			9.33E+03	9.33E+03	9.33E+03				
Y-90	9.33E+03			9.33E+03	9.33E+03	9.33E+03				
Tc-99	1.12E+02			1.12E+02	1.12E+02	1.12E+02				
Total Curies	2.59E+04			2.59E+04	2.59E+04	2.59E+04				
Chemicals (MT)										
Ag+										
Al+3										
Am+3										
As+5										
Ba+2										
Be+2										
Bi+3										
Ca+2										
Cd+2										
Ce+3										
Cm+3										
Co+3										
Cr+3										
Cs+										
Cu+2										
Fe+3										
Hg+2										
K+										
La+3										
Mg+2										
Mn+4										
Mo+6										
Na+										
Ni+3										
Np+4										
Pb+4										
Pu+4										
Rh+3										
Se+6										
Si+4										
Sr+2										
Th+4										
Ti+4										
UO2+2										
Zn+2										
Cl-	7.26E-01			7.26E-01	7.26E-01	7.26E-01				
CO3-2										
F-	5.14E+00			5.14E+00	5.14E+00	5.14E+00				
I-	1.15E-04			1.15E-04	1.15E-04	1.15E-04				
NO2-										
NO3-										
OH-										
PO4-3										
SO4-2										
TcO4-										
Cancrinite										
H2O										
MnO2	8.61E-02			8.61E-02	8.61E-02	8.61E-02				
Organic Carbon										
ZrO2:2H2O										
Ag2O	1.73E-03			1.73E-03	1.73E-03	1.73E-03				
AlPO4	2.92E+01			2.92E+01	2.92E+01	2.92E+01				
Al2O3	1.03E+02			1.03E+02	1.03E+02	1.03E+02				
Am2O3	1.28E-05			1.28E-05	1.28E-05	1.28E-05				
As2O5	3.14E-07			3.14E-07	3.14E-07	3.14E-07				
B2O3	5.50E-04			5.50E-04	5.50E-04	5.50E-04				
BaO	4.44E-03			4.44E-03	4.44E-03	4.44E-03				
BeO	3.41E-07			3.41E-07	3.41E-07	3.41E-07				
Bi2O3	6.63E-02			6.63E-02	6.63E-02	6.63E-02				
CaO	2.30E+02			2.30E+02	2.30E+02	2.30E+02				
CdO	4.32E-02			4.32E-02	4.32E-02	4.32E-02				
Ce2O3	1.40E-02			1.40E-02	1.40E-02	1.40E-02				
Cm2O3	5.30E-10			5.30E-10	5.30E-10	5.30E-10				
Co2O3	1.03E-05			1.03E-05	1.03E-05	1.03E-05				
Cr2O3	2.17E+00			2.17E+00	2.17E+00	2.17E+00				
Cs2O	2.22E-04			2.22E-04	2.22E-04	2.22E-04				
CuO	6.23E-04			6.23E-04	6.23E-04	6.23E-04				
Fe2O3	2.48E-01			2.48E-01	2.48E-01	2.48E-01				
FeO	7.71E-06			7.71E-06	7.71E-06	7.71E-06				
HgO	1.16E-04			1.16E-04	1.16E-04	1.16E-04				
K2O	4.27E+00			4.27E+00	4.27E+00	4.27E+00				
La2O3	1.42E-03			1.42E-03	1.42E-03	1.42E-03				
Li2O										
MgO	5.37E-06			5.37E-06	5.37E-06	5.37E-06				
MnO	3.15E-07			3.15E-07	3.15E-07	3.15E-07				
MoO3	5.45E-05			5.45E-05	5.45E-05	5.45E-05				
Na2O	5.76E+02			5.76E+02	5.76E+02	5.76E+02				

STREAM NAME	1102	1103	1104	1105	1106	1107	1108	1109	1110	1111
SOLID COMPONENTS										
Chemicals Continued (MT)										
Nb2O3	5.82E-02			5.82E-02	5.82E-02	5.82E-02				
NpO2	5.64E-05			5.64E-05	5.64E-05	5.64E-05				
HfO2	5.49E-02			5.49E-02	5.49E-02	5.49E-02				
PuO2	1.63E-04			1.63E-04	1.63E-04	1.63E-04				
Rb2O	1.32E-06			1.32E-06	1.32E-06	1.32E-06				
Re2O7	7.07E-07			7.07E-07	7.07E-07	7.07E-07				
Rh2O3	5.34E-06			5.34E-06	5.34E-06	5.34E-06				
Ru2O3	7.26E-06			7.26E-06	7.26E-06	7.26E-06				
SeO3	2.67E-06			2.67E-06	2.67E-06	2.67E-06				
SiO2	1.35E+03			1.35E+03	1.35E+03	1.35E+03				
SO3	8.16E-01			8.16E-01	8.16E-01	8.16E-01				
SrO	2.27E-03			2.27E-03	2.27E-03	2.27E-03				
Tc2O7	1.03E-02			1.03E-02	1.03E-02	1.03E-02				
TeO3	5.64E-06			5.64E-06	5.64E-06	5.64E-06				
ThO2	9.63E-07			9.63E-07	9.63E-07	9.63E-07				
TiO2	7.82E-08			7.82E-08	7.82E-08	7.82E-08				
UO3	5.65E-01			5.65E-01	5.65E-01	5.65E-01				
ZrO	5.06E-06			5.06E-06	5.06E-06	5.06E-06				
ZrO2	2.96E-02			2.96E-02	2.96E-02	2.96E-02				
Cement										
Cu										
CuSO4										
Dicyclopentadiene										
Flyash										
Oligomer										
Na Loaded Resin										
Sulfur										

STREAM NAME	1112	1113	1114	1115	1116	1117	1118	1119	1120	1121
LIQUID COMPONENTS										
Total Mass Flow (MT)	1.24E+03	1.03E+03	4.89E+04	1.56E+05	4.29E+03	1.10E+03	1.21E+01	1.09E+03	3.18E+03	3.18E+03
Volume (L)	8.07E+05	1.03E+06	4.89E+07	1.50E+08	4.21E+06	1.10E+06	1.21E+04	1.09E+06	3.10E+06	3.10E+06
Specific Gravity	1.54E+00	1.00E+00	1.00E+00	1.04E+00	1.02E+00	1.00E+00	1.00E+00	1.00E+00	1.03E+00	1.03E+00
Radionuclides (Ci)										
Am-241										
C-14										
Cs-137				9.08E+04						
Ba-137				8.63E+04						
Np-237										
Pu-239										
Pu-240										
Pu-241										
Sr-90										
Y-90										
Tc-99				5.36E+03						
Total Curies				1.83E+05						
Chemicals (MT)										
Ag+										
Am+3										
As+5										
B+3										
Ba+2										
Be+2										
Bi+3										
Ca+2				2.67E+03	5.48E-03	1.90E-10	1.90E-13	1.90E-10	5.48E-03	5.48E-03
Cd+2				9.44E-01						
Ce+3										
Cm+3										
Co+3										
Cs+				5.24E-03						
Cu+2										
Fe+2										
Fe+3										
H+										
Hg+2										
K+				1.79E+00						
La+3										
Mg+2										
Mn+2										
Mn+4										
Mo+6				9.56E-05						
Na+	3.57E+02			2.16E+02	3.57E+02	1.24E-05	1.24E-08	1.24E-05	3.57E+02	3.57E+02
Ni+3										
Np+4										
Pb+4				1.19E+00						
Pu+4										
Rb+										
Re+7										
Rh+3										
Ru+3				1.47E-04						
Se+6				4.14E-05						
Si+4										
Sr+2										
Te+6				1.02E-04						
UO2+2										
Zn+2										
Zr+4										
Al(OH)4-										
BO2-				1.13E-02						
Cl-				2.40E+02	4.49E+02	1.56E-05	1.56E-08	1.56E-05	4.49E+02	4.49E+02
CO3-2										
Cr(OH)4-										
F-				2.06E+02						
I-				5.69E-01						
NO2-										
NO3-				6.42E+03	1.70E+00	5.88E-08	5.88E-11	5.87E-08	1.70E+00	1.70E+00
OH-	2.64E+02			2.27E+02	4.77E+01	1.65E-06	1.65E-09	1.65E-06	4.77E+01	4.77E+01
PO4-3				2.85E+02						
SO4-2										
TcO4-				5.19E-01						
H2O	6.21E+02	1.03E+03	4.89E+04	1.46E+05	3.43E+03	1.10E+03	1.21E+01	1.09E+03	2.33E+03	2.33E+03
Organic Carbon										
ZrO2:2H2O										
Hg				5.20E-01						
TcO2										
Cl2										
CO										
CO2										
F2										
H2										
I2										
N2										
N2O										
NO										
NO2										
O2										
SO2										
Dicyclopentadiene										
Glycolic Anion										
H2S										
Glycolic Acid										
Kerosene										
NH3										
Oligomer										
Sulfur										

STREAM NAME	1112	1113	1114	1115	1116	1117	1118	1119	1120	1121
SOLID COMPONENTS										
Total Mass Flow (MT)		1.14E+02	5.43E+03	3.09E+03	1.76E+02				1.76E+02	1.76E+02
Radionuclides (Ci)										
Am-241				3.98E+01						
C-14										
Cs-137				3.64E+03						
Ba-137				3.46E+03						
Np-237				3.50E-02						
Pu-239				8.30E+00						
Pu-240				2.17E+00						
Pu-241				2.43E+01						
Sr-90				9.33E+03						
Y-90				9.33E+03						
Tc-99				1.12E+02						
Total Curies				2.59E+04						
Chemicals (MT)										
Ag+										
Al+3										
Am+3										
As+3										
Ba+2										
Be+2										
Bi+3										
Ca+2		6.18E+01	2.94E+03	5.36E+02	1.18E+02				1.18E+02	1.18E+02
Cd+2										
Ce+3										
Cm+3										
Co+3										
Cr+3										
Cs+										
Cu+2										
Fe+3										
Hg+2										
K+										
La+3										
Mg+2										
Mn+4										
Mo+6										
Na+										
Ni+3										
Np+4										
Pb+4										
Pu+4										
Rh+3										
Se+6										
Si+4										
Sr+2										
Th+4										
Ti+4										
UO2+2										
Zr+2										
Cl-				7.26E-01						
CO3-2										
F-				2.58E+02	5.33E+01				5.33E+01	5.33E+01
I-				1.15E-04						
NO2-										
NO3-										
OH-		5.24E+01	2.49E+03		4.73E+00				4.73E+00	4.73E+00
PO4-3										
SO4-2										
TcO4-										
Cancrinite										
H2O										
MnO2				8.61E-02						
Organic Carbon										
ZrO2:2H2O										
Ag2O				1.73E-03						
AlPO4				2.92E+01						
Al2O3				1.03E+02						
Am2O3				1.28E-05						
As2O5				3.14E-07						
B2O3				5.50E-04						
BaO				4.44E-03						
BeO				3.41E-07						
Bi2O3				6.63E-02						
CaO				2.30E+02						
CdO				4.32E-02						
Ce2O3				1.40E-02						
Cm2O3				5.30E-10						
Co2O3				1.03E-05						
Cr2O3				2.17E+00						
Cs2O				2.22E-04						
CuO				6.23E-04						
Fe2O3				2.48E-01						
FeO				7.71E-06						
HgO				1.16E-04						
K2O				4.27E+00						
La2O3				1.42E-03						
Li2O										
MgO				5.37E-06						
MnO				3.15E-07						
MoO3				5.45E-05						
Na2O				5.76E+02						

STREAM NAME	1112	1113	1114	1115	1116	1117	1118	1119	1120	1121
SOLID COMPONENTS										
Chemicals Continued (MT)										
Nd_2O_3				5.82E-02						
NpO_2				5.64E-05						
PbO_2				5.49E-02						
PuO_2				1.63E-04						
Rb_2O				1.32E-06						
Re_2O_7				7.07E-07						
Rh_2O_3				5.34E-06						
Ru_2O_3				7.26E-06						
SeO_3				2.67E-06						
SiO_2				1.35E+03						
SO_3				8.16E-01						
SrO				2.27E-03						
Tc_2O_7				1.03E-02						
TeO_3				5.64E-06						
ThO_2				9.63E-07						
TiO_2				7.83E-08						
UO_3				5.63E-01						
ZnO				5.06E-06						
ZrO_2				2.96E-02						
Cement										
Cu										
$CuSO_4$										
Dicyclopentadiene										
Flyash										
Oligomer										
Na Loaded Resin										
Sulfur										

STREAM NAME	1122	1123	1124	1125	1126	1127	1128
LIQUID COMPONENTS							
Total Mass Flow (MT)	3.18E+03						4.99E+04
Volume (L)	3.10E+06						4.99E+07
Specific Gravity	1.03E+00						1.00E+00
Radionuclides (Ci)							
Am-241							
C-14							
Cs-137							
Ba-137							
Np-237							
Pu-239							
Pu-240							
Pu-241							
Sr-90							
Y-90							
Tc-99							
Total Curies							
Chemicals (MT)							
Ag+							
Am+3							
As+5							
B+3							
Ba+2							
Be+2							
Bi+3							
Ca+2	5.48E-03						
Cd+2							
Ce+3							
Cm+3							
Co+3							
Cs+							
Cu+2							
Fe+2							
Fe+3							
H+							
Hg+2							
K+							
La+3							
Mg+2							
Mn+2							
Mn+4							
Mo+6							
Na+	3.57E+02						
Ni+3							
Np+4							
Pb+4							
Pu+4							
Rb+							
Re+7							
Rh+3							
Ru+3							
Se+6							
Si+4							
Sr+2							
Te+6							
UO2+2							
Zn+2							
Zr+4							
Al(OH)4-							
BO2-							
Cl-	4.49E+02						
CO3-2							
Cr(OH)4-							
F-							
I-							
NO2-							
NO3-	1.70E+00						
OH-	4.77E+01						
PO4-3							
SO4-2							
TcO4-							
H2O	2.33E+03						4.99E+04
Organic Carbon							
ZrO2:2H2O							
Hg							
TcO2							
Cl2							
CO							
CO2							
F2							
H2							
I2							
N2							
N2O							
NO							
NO2							
O2							
SO2							
Dicyclopentadiene							
Glycolic Anion							
H2S							
Glycolic Acid							
Kerosene							
NH3							
Oligomer							
Sulfur							

STREAM NAME	1122	1123	1124	1125	1126	1127	1128
SOLID COMPONENTS							
Total Mass Flow (MT)	1.76E+02	1.68E+03	1.68E+03	6.72E+03	6.72E+03	5.55E+03	
Radionuclides (Ci)							
Am-241							
C-14							
Cs-137							
Ba-137							
Np-237							
Pu-239							
Pu-240							
Pu-241							
Sr-90							
Y-90							
Tc-99							
Total Curies							
Chemicals (MT)							
Ag+							
Al+3							
Am+3							
As+5							
Ba+2							
Be+2							
Bi+3							
Ca+2	1.18E+02			1.18E+02	1.18E+02	3.00E+03	
Cd+2							
Ce+3							
Cm+3							
Co+3							
Cr+3							
Cs+							
Cu+2							
Fe+3							
Hg+2							
K+							
La+3							
Mg+2							
Mn+4							
Mo+6							
Na+				3.57E+02	3.57E+02		
Ni+3							
Np+4							
Pb+4							
Pu+4							
Rn+3							
Se+6							
Si+4							
Sr+2							
Th+4							
Ti+4							
UO2+2							
Zn+2							
Cl-				4.49E+02	4.49E+02		
CO3-2							
F-	5.33E+01			5.33E+01	5.33E+01		
I-							
NO2-							
NO3-				1.70E+00	1.70E+00		
OH-	4.73E+00			5.24E+01	5.24E+01	2.55E+03	
PO4-3							
SO4-2							
TcO4-							
Cancrinite							
H2O				2.33E+03	2.33E+03		
MnO2							
Organic Carbon							
ZrO2:2H2O							
Ag2O							
AlPO4							
Al2O3							
Am2O3							
As2O5							
B2O3							
BaO							
BeO							
Bi2O3							
CsO							
CdO							
Ce2O3							
Cm2O3							
Co2O3							
Cr2O3							
Cs2O							
CuO							
Fe2O3							
FeO							
HgO							
K2O							
La2O3							
Li2O							
MgO							
MnO							
MoO3							
Na2O							

STREAM NAME	1122	1123	1124	1125	1126	1127	1128
SOLID COMPONENTS							
Chemicals Continued (MT)							
Ni2O3							
NpO2							
PbO2							
PuO2							
Rb2O							
Re2O7							
Rh2O3							
Ru2O3							
SeO3							
SiO2							
SO3							
SrO							
Tc2O7							
TeO3							
ThO2							
TiO2							
UO3							
ZrO							
ZrO2							
Cement			1.68E+03	1.68E+03	1.68E+03		
Cu							
CuSO4							
Dicyclopentadiene							
Flyash		1.68E+03		1.68E+03	1.68E+03		
Oligomer							
Na Loaded Resin							
Sulfur							

APPENDIX B

PROCESS FACILITIES, SITE LAYOUT, AND SUPPORT FACILITIES

B1.0 PROCESS FACILITIES

The initial facility will be capable of performing separations and vitrification of LLW. It will have the capacity of producing up to 120 Mg/d of glass cullet. The vitrification process will use a single combustion melter train.

At some predetermined point in time the LLW melter train will be shut-down and converted to a HLW melter train capable of producing up to 20 Mg/d of HLW glass. The converted facility will be capable of producing monolithic glass, pouring it into stainless steel canisters, cooling, sealing, decontaminating, and overpacking the canisters, and loading them out to the Canister/Cask Handling Annex. Figure B-1, SPF Layout, shows the SPF configuration for both (1) separations/LLW vitrification and (2) HLW vitrification.

Due to the depth (approximately 16 m belowgrade) of the canister transfer and handling facilities, these portions of the HLW plant will be included in the initial design and construction of the Separations/LLW vitrification facility. The equipment located in these areas are dedicated to the HLW vitrification process and will be procured and installed at a later date. To prevent contamination and insure the ability to install the HLW equipment, seal plates and cover blocks will be provided to separate these areas from the LLW processing areas. Radiological protection will be provided to allow the installation of equipment in the canister transfer tunnel while the LLW melter is in operation.

It is assumed that the majority of the decommissioning, decontamination, and removal of LLW equipment and installation of HLW equipment within the process area can be performed remotely. However, a certain amount will have to be contact handled. Radiological protection will have to be provided for personnel in the melter and other process cells.

Knockouts in the exterior walls and roof will be provided to allow installation of large equipment items. These knockouts will be located so as to not compromise the integrity of the LLW confinement envelope.

The impact of this alternative on equipment in the LLW portion of the plant is summarized in Table B-1.

As Table B-1 indicates, some of the equipment items from the converted LLW train can be re-used in HLW service, while others will be designated as surplus. The net effect of re-used and newly added equipment is to create a fully equipped, 20 Mg/day HLW vitrification train. Figure B-2 shows the SPF Conversion Process Flow Diagram for both configurations and indicates the process equipment utilization in both configurations.

Table B-1. Impact of Melter Replacement. (2 sheets)

LLW equipment tag no.	Equipment name	Status After Conversion
TK-135	Evaporator Feed Tank	No change, continue in HLW service
EV-139	Supernatant Evaporator	Continue in HLW service at 50% of previous capacity
TK-404A and B	LLW Melter Feed Adjustment Tank	Change to TK-315A and B, HLW Melter Feed Adjustment Tank
TK-406A and B	LLW Melter Feed Tank	Change to TK-317A and B, HLW Melter Feed Tank
EM-412A	LLW Melter	Replace by EM-323, HLW Melter
S-413A	LLW Glass Separator	Replace by S-324, HLW Glass Separator
MQ-414A	LLW Quench Flume	Surplus
TK-416A	LLW Cullet Catch Tank	Surplus
EC-417A	LLW Condenser	Surplus
EC-419A	LLW Cooler	Surplus
TK-421A	LLW Quench Water Recycle Tank	Surplus
FS-422A	LLW Screen	Surplus
TK-426A	LLW Filter Catch Tank	Surplus
B-427A	LLW Cullet Day Lag Storage	Surplus
EC-428A	LLW Condenser	Surplus
TK-429A	LLW Condensate Catch Tank	Surplus
FC-432A	LLW Cyclone	Surplus
B-434A	LLW Day Bin	Surplus
TK-438A	Sulfur Cement Mixing Tank	Surplus
TK-441A	Surge Tank	Surplus

Table B-1. Impact of Melter Replacement. (2 sheets)

TK-443A	Decanted Molten Sulfur Vault	Surplus
TK-2002A	LLW Cullet Storage	Surplus
FC-500A	LLW Cyclone	Surplus
TK-503A	LLW Recycle Cullet Catch Tank	Surplus
T-609A	LLW Quench Tower	Change to T-600, HLW Quench Tower
EC-610A	LLW Cooler	Change to EC-601, HLW Cooler
TK-614A	LLW Scrub Solution Tank	Change to TK-608, HLW Scrub Solution Tank
DE-618A	LLW Mist Eliminator	Change to DE-605, HLW Mist Eliminator

HLW = High-level waste
LLW = Low-level waste.

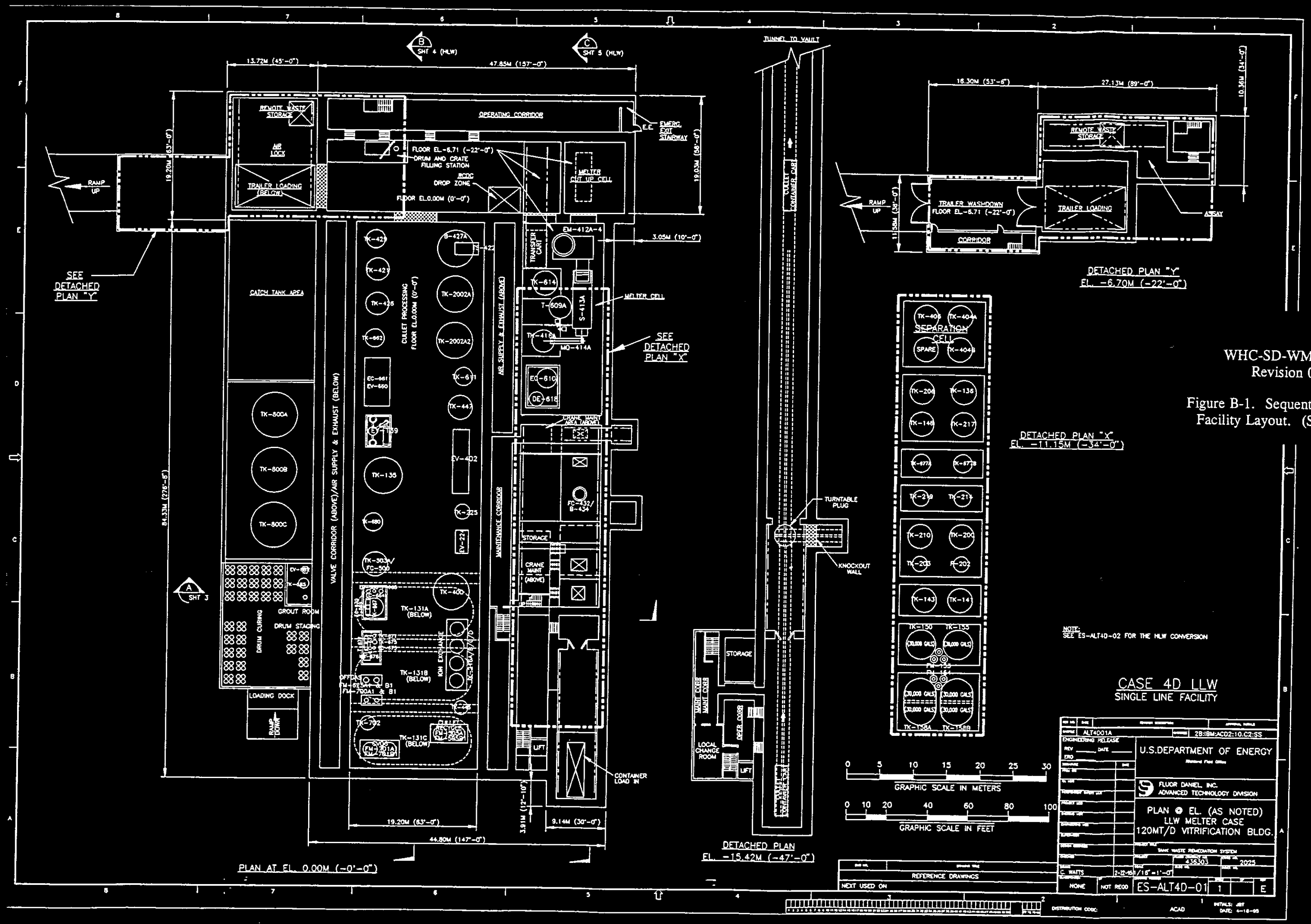

WHC-SD-WM-TI-694
Revision 0

Figure B-1. Sequential Processing Facility Layout. (Sheet 1 of 6)

Figure B-1. Sequential Processing Facility Layout. (Sheet 2 of 6)

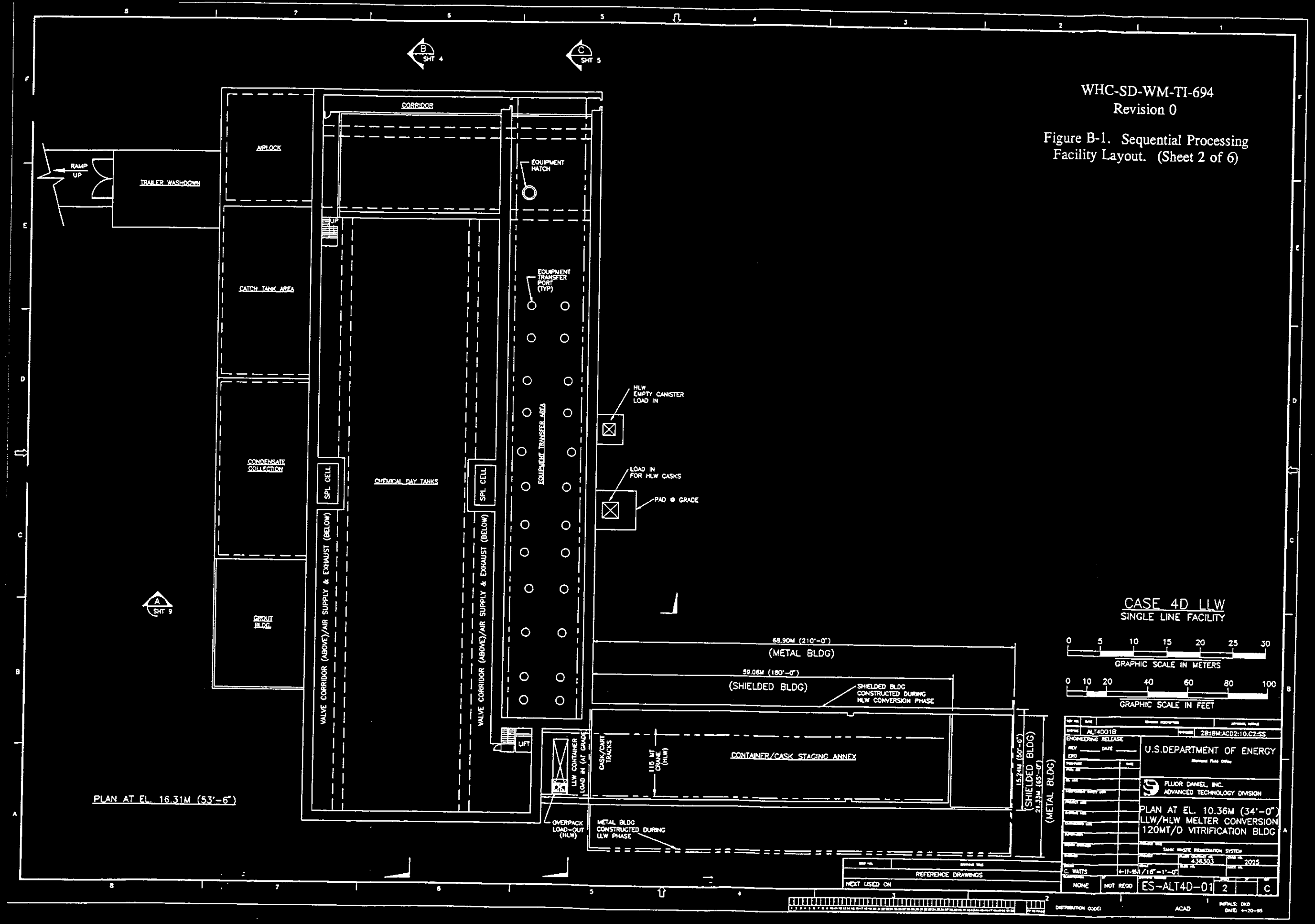

Figure B-1. Sequential Processing Facility Layout. (Sheet 3 of 6)

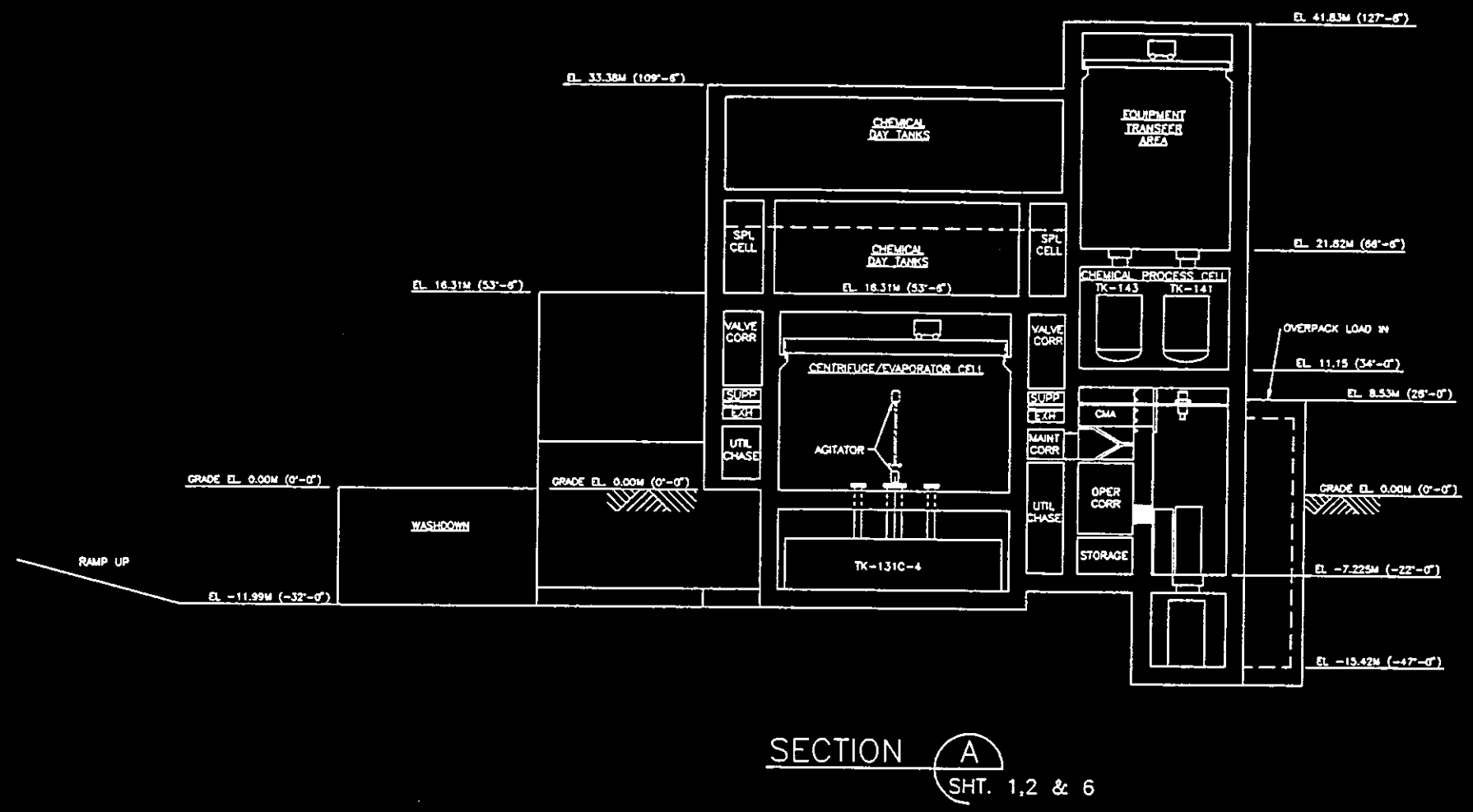

SECTION A
SHT. 1,2 & 6

CASE 4D LLW
SINGLE LINE FACILITY

0 5 10 15 20 25 30
GRAPHIC SCALE IN METERS

0 10 20 40 60 80 100
GRAPHIC SCALE IN FEET

REFERENCE DRAWINGS
NEXT USED ON

ALT4001C
28:18M:ACD2:10.C2::SS
ENGINEERING RELEASE
REV ____ DATE ____
EXC

U.S.DEPARTMENT OF ENERGY
Richland Field Office

FLUOR DANIEL, INC.
ADVANCED TECHNOLOGY DIVISION

SECTION A
LLW MELTER CONVERSION
120MT/D VITRIFICATION BLDG

TANK WASTE REMEDIATION SYSTEM
438303
2016/067

M.SCHUDLBERG 3-2-95 1/16" = 1'-0"

NONE NOT REQD ES-ALT4D-01 3 A

DISTRIBUTION CODE: ACAD
INITIALS: JBY
DATE: 4-24-95

Figure B-1. Sequential Processing Facility Layout. (Sheet 4 of 6)

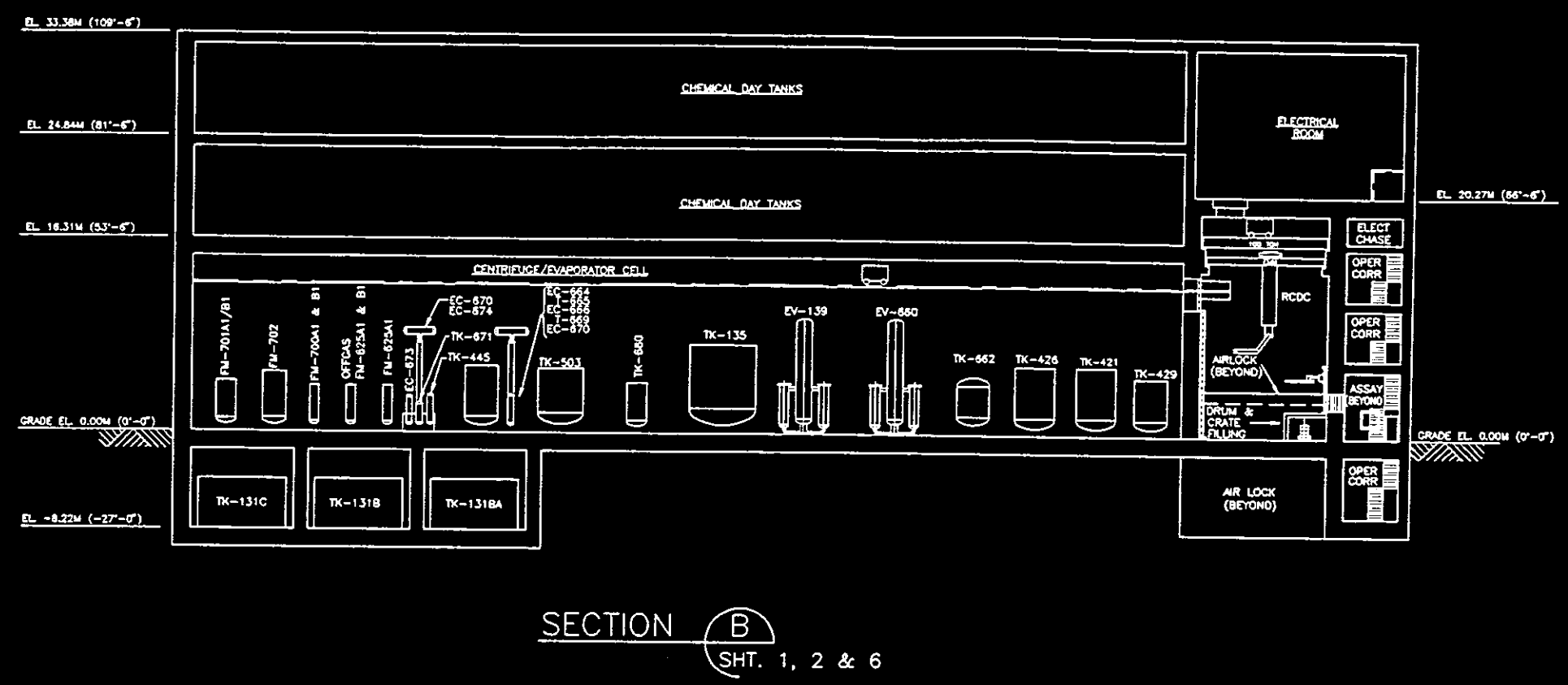

SECTION B
SHT. 1, 2 & 6

CASE 4D LLW
SINGLE LINE FACILITY

0 5 10 15 20 25 30
GRAPHIC SCALE IN METERS

0 10 20 40 60 80 100
GRAPHIC SCALE IN FEET

REFERENCE DRAWINGS
NEXT USED ON

ALT4001J
2B:IBM:AC02:10.C2:SS
ENGINEERING RELEASE
REV ____ DATE ____
DKO

U.S.DEPARTMENT OF ENERGY
Richland Field Office

FLUOR DANIEL, INC.
ADVANCED TECHNOLOGY DIVISION

SECTION B
HLW MELTER CONVERSION
120MT/D VITRIFICATION BLDG

TANK WASTE REMEDIATION SYSTEM
436303
2025

M.SCHOLBERG
1/16" = 1'-0"
NONE
NOT REQD
ES-ALT4D-01
4
D
ACAD
INITIALS: DKO
DATE: 4-21-95

Figure B-1. Sequential Processing Facility Layout. (Sheet 5 of 6)

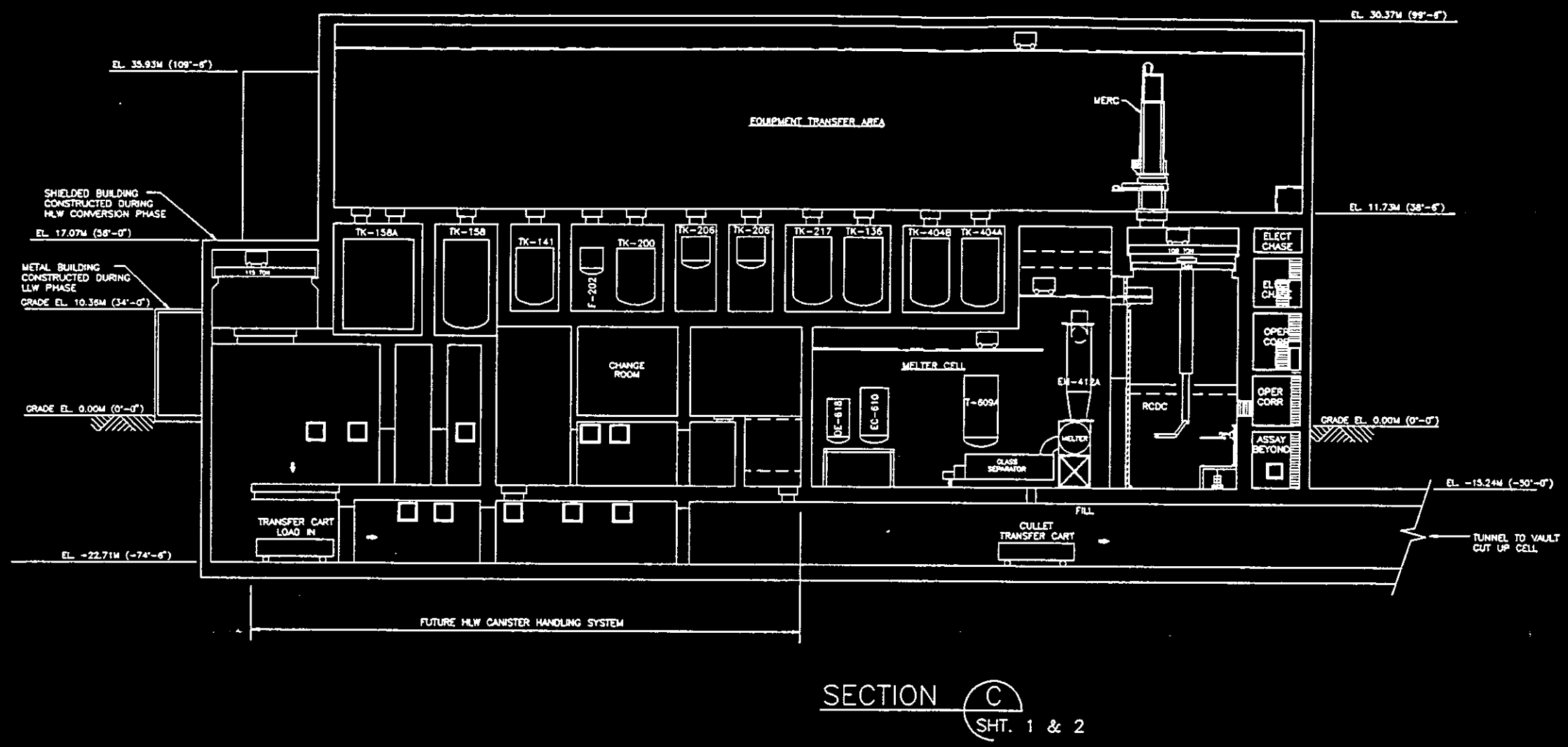

SECTION C
SHT. 1 & 2

CASE 4D LLW
SINGLE LINE FACILITY

0 5 10 15 20 25 30
GRAPHIC SCALE IN METERS

0 10 20 40 60 80 100
GRAPHIC SCALE IN FEET

REFERENCE DRAWINGS
NEXT USED ON

ALT4D01E	2B:18M:ACD2:10.C2:SS
ENGINEERING RELEASE REV ___ DATE ___ DRO	
U.S.DEPARTMENT OF ENERGY	
FLUOR DANIEL, INC. ADVANCED TECHNOLOGY DIVISION	
SECTION C LLW MELTER CONVERSION 120MT/D VITRIFICATION BLDG	
TANK WASTE REMEDIATION SYSTEM	
M.SCHUDLBERG	438303 / 2016/067
NONE / NOT REQD	ES-ALT4D-01 5 A

DISTRIBUTION CODE: ACAD

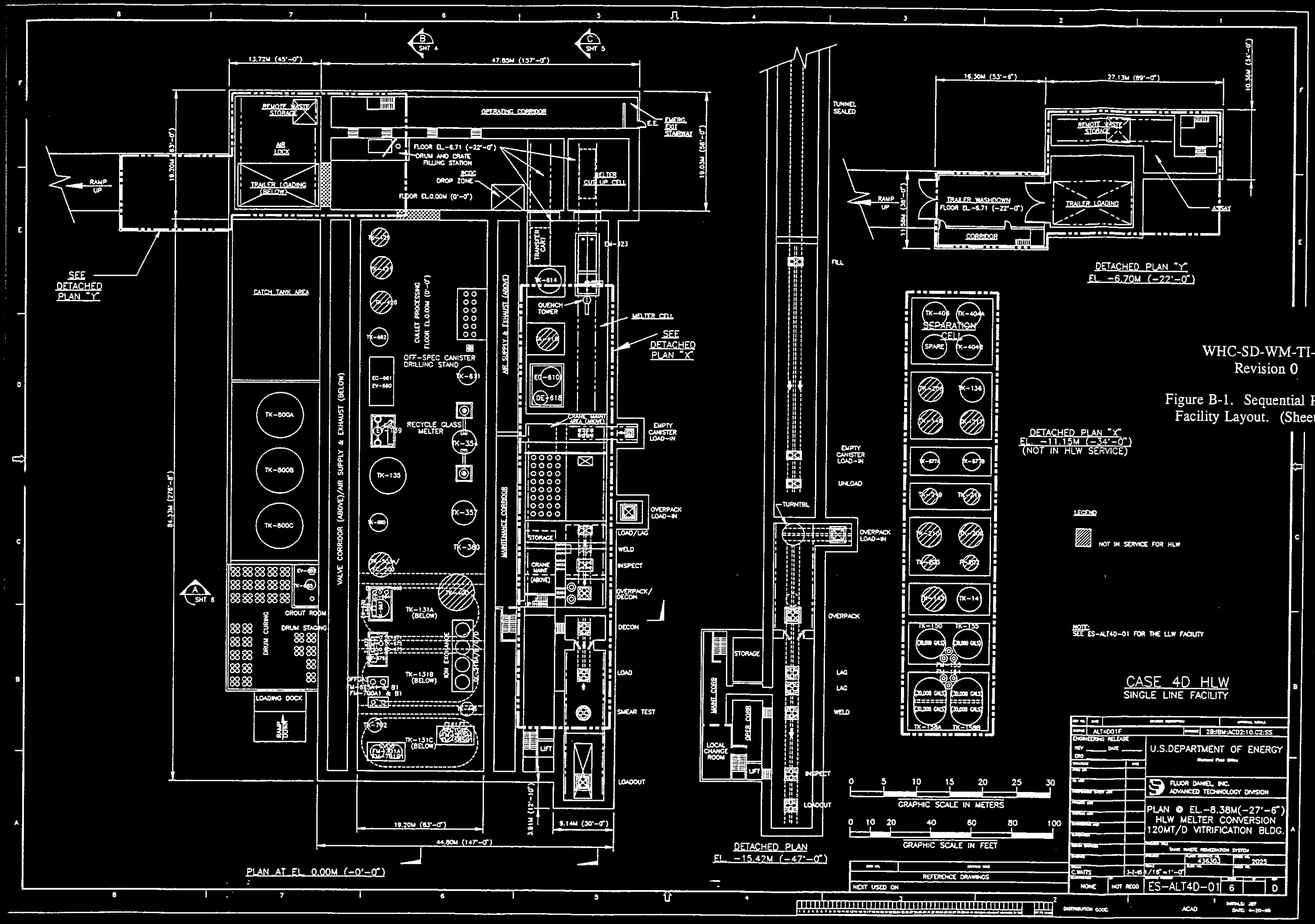

WHC-SD-WM-TI-694
Revision 0

Figure B-1. Sequential Processing Facility Layout. (Sheet 6 of 6)

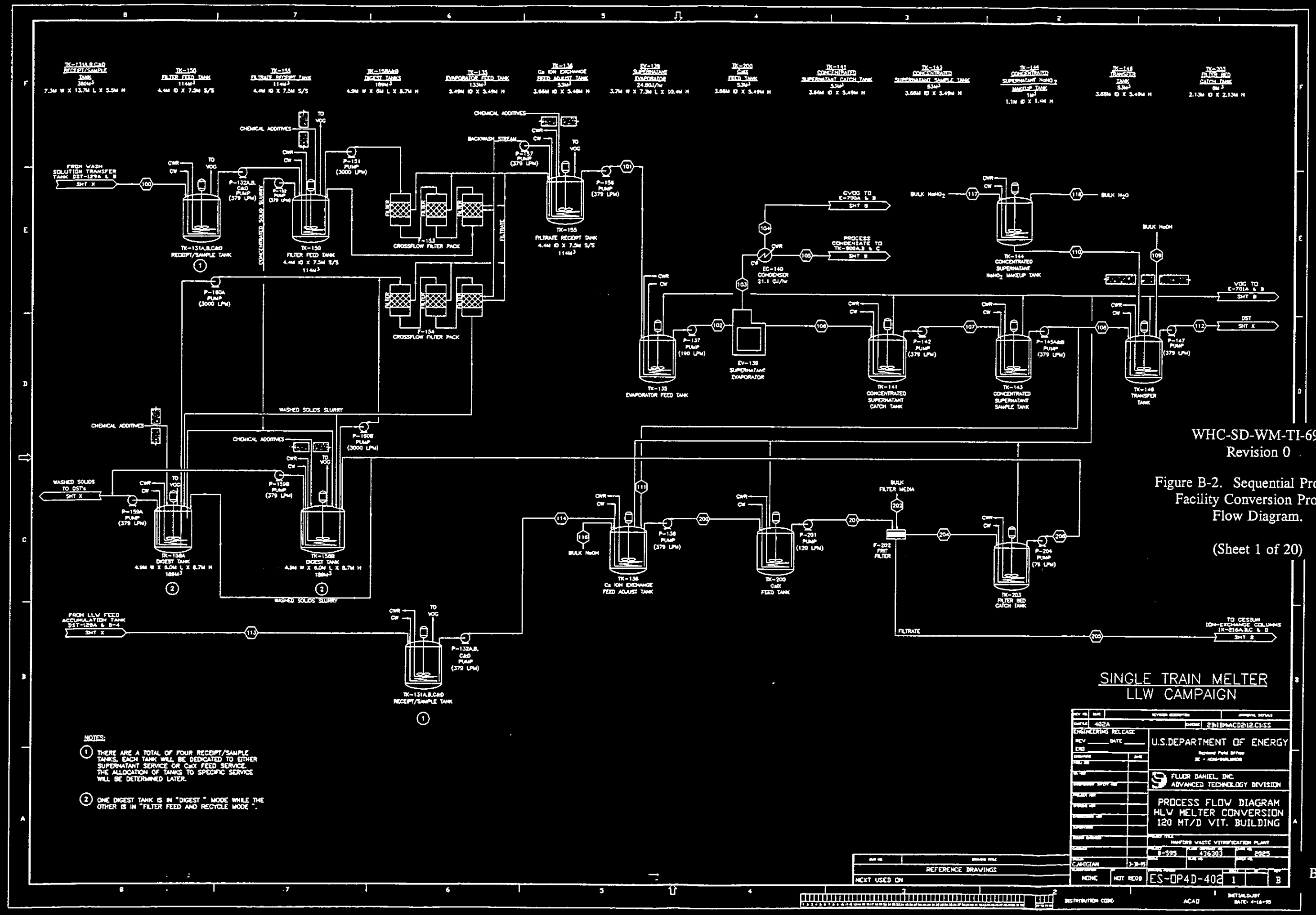

WHC-SD-WM-TI-694
Revision 0

Figure B-2. Sequential Processing Facility Conversion Process Flow Diagram.

(Sheet 1 of 20)

Figure B-2. Sequential Processing Facility Conversion Process Flow Diagram.

(Sheet 2 of 20)

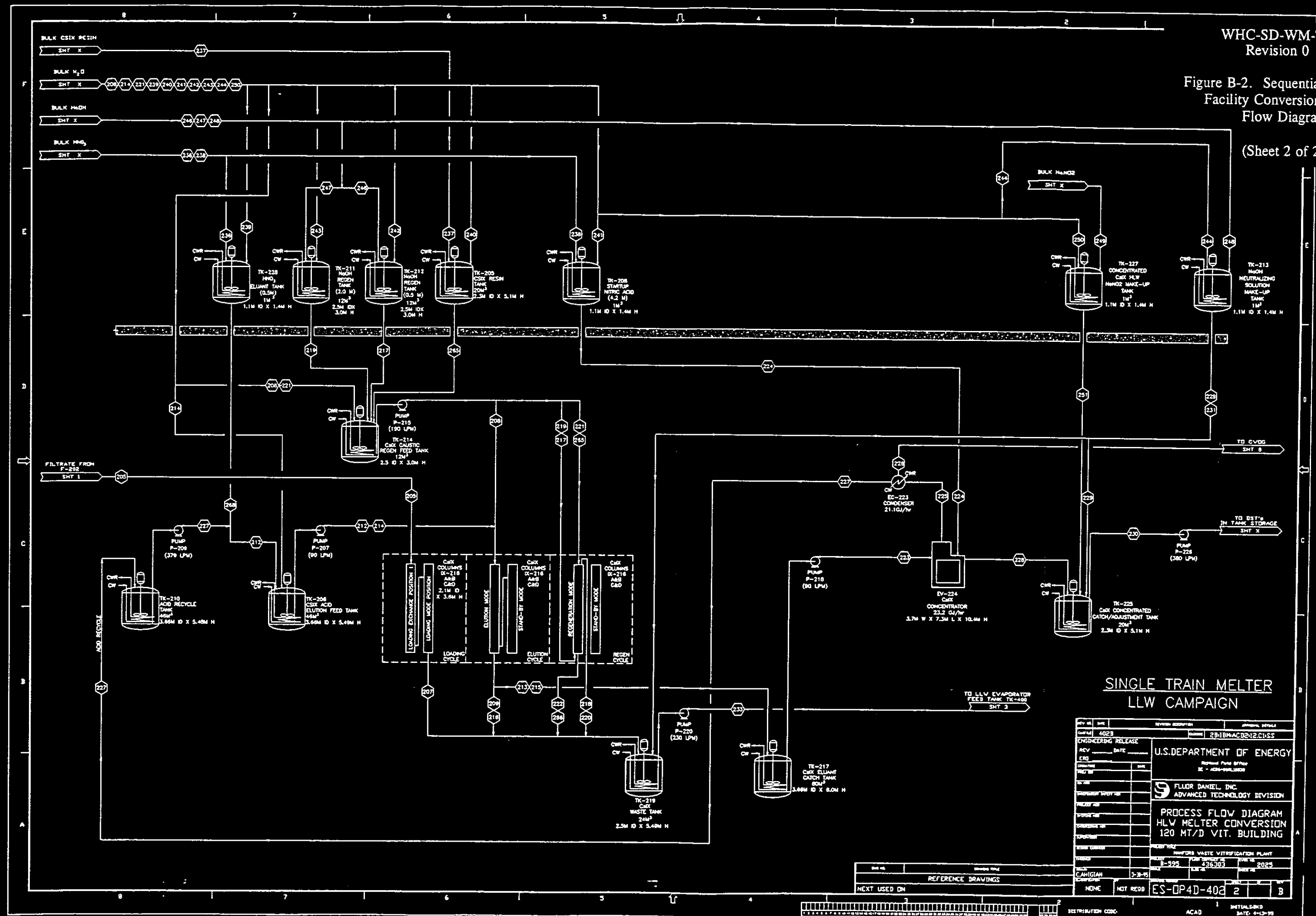

Figure B-2. Sequential Processing Facility Conversion Process Flow Diagram.

(Sheet 3 of 20)

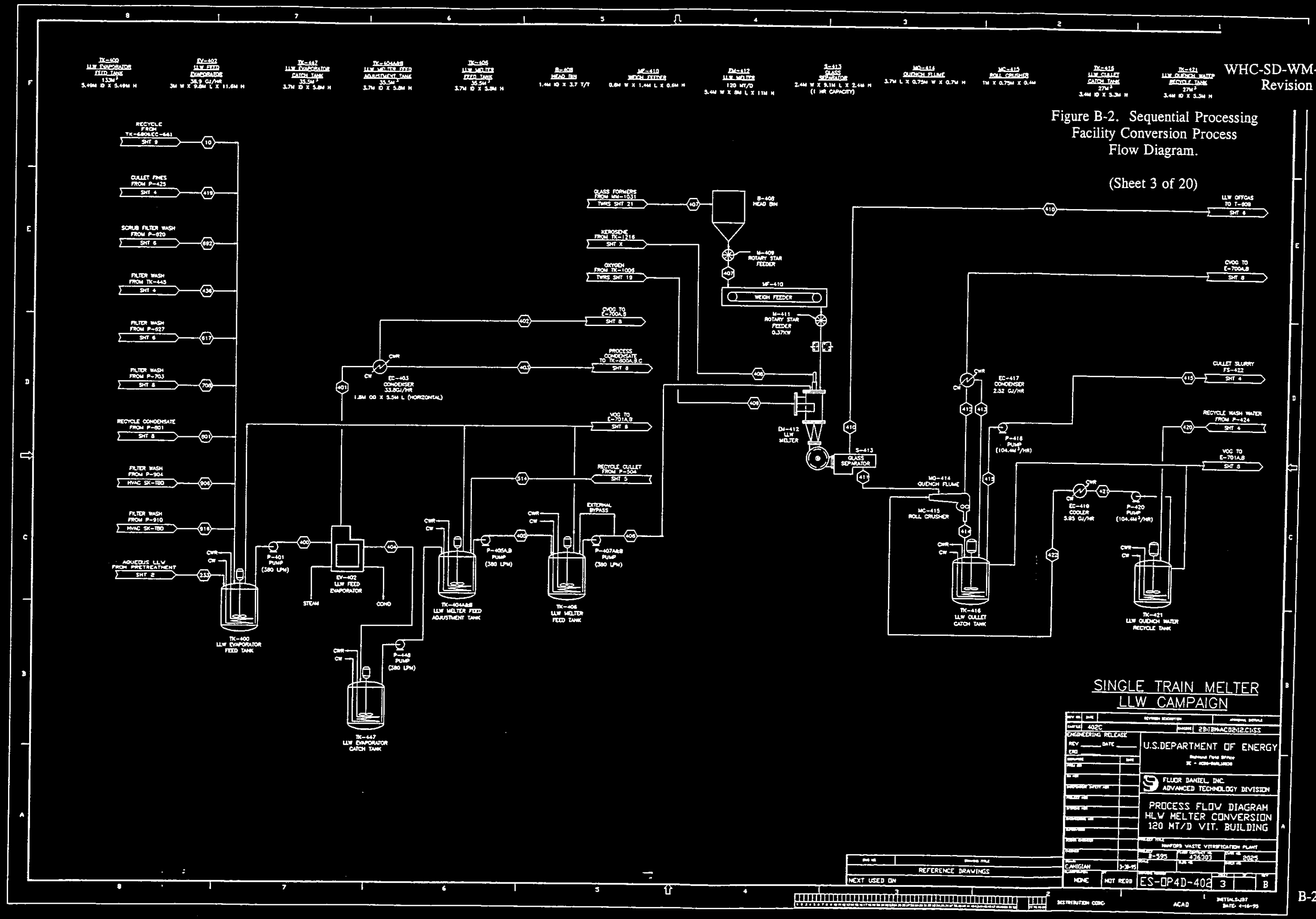

Figure B-2. Sequential Processing Facility Conversion Process Flow Diagram.

(Sheet 4 of 20)

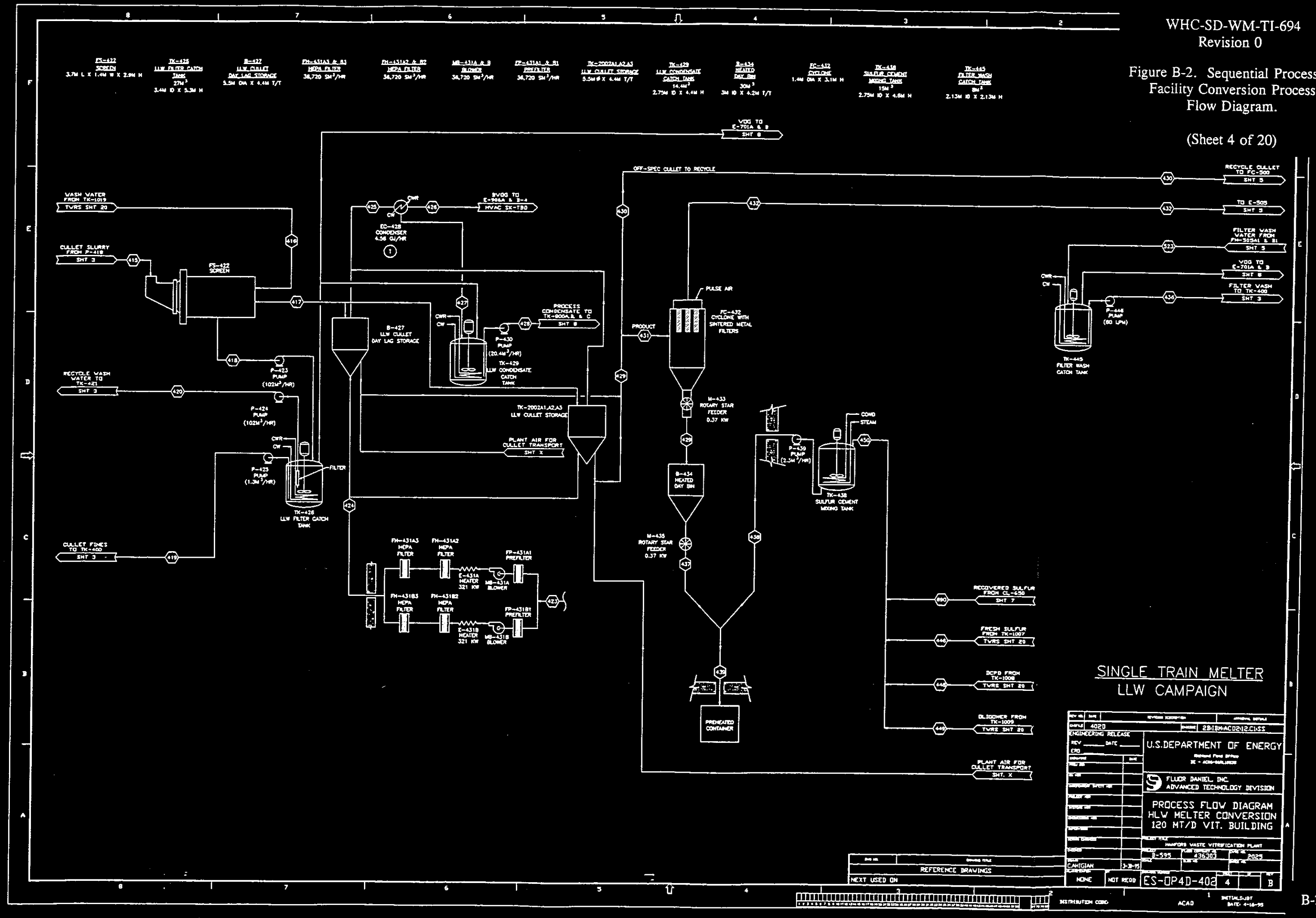

Figure B-2. Sequential Processing Facility Conversion Process Flow Diagram.

(Sheet 5 of 20)

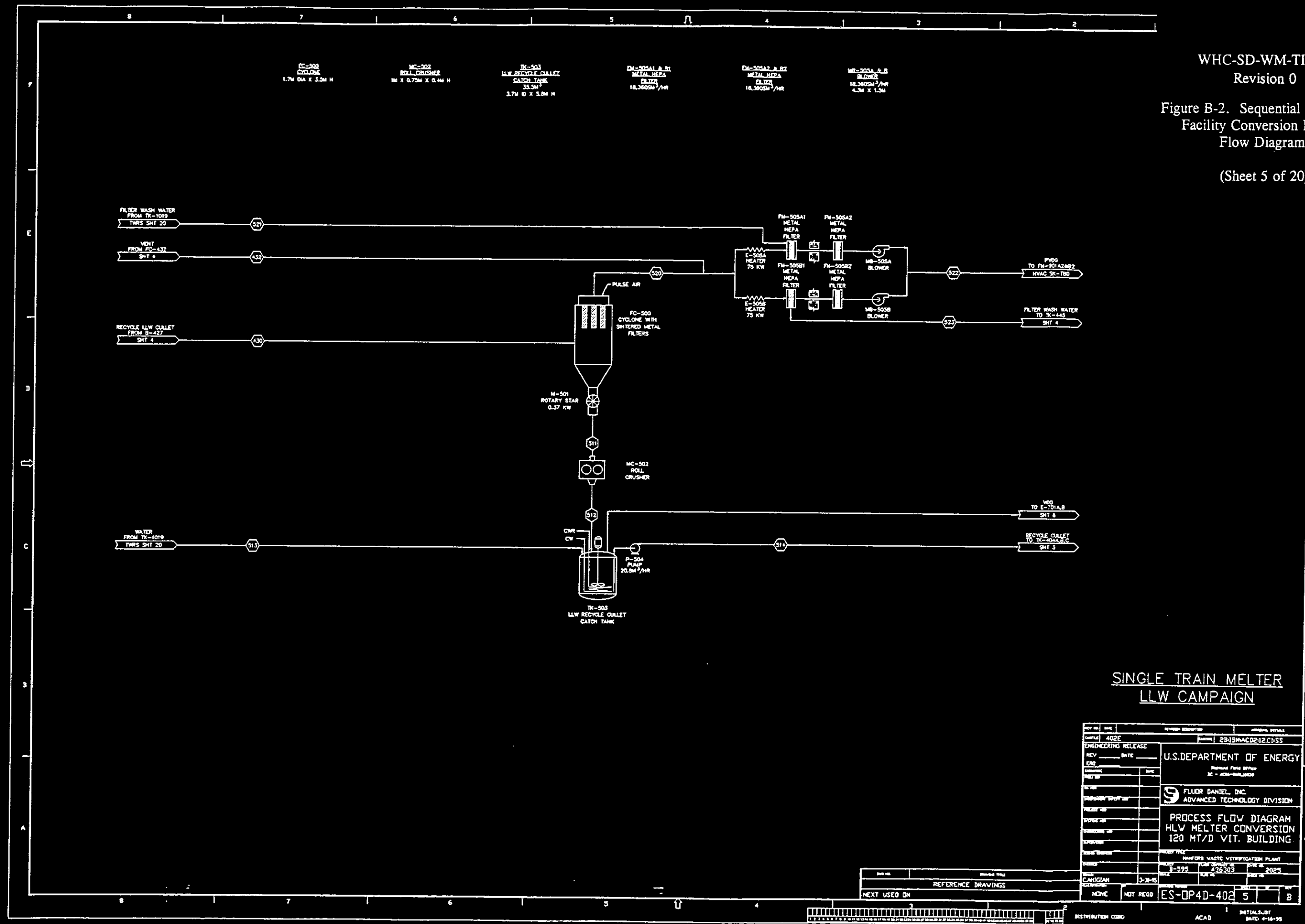

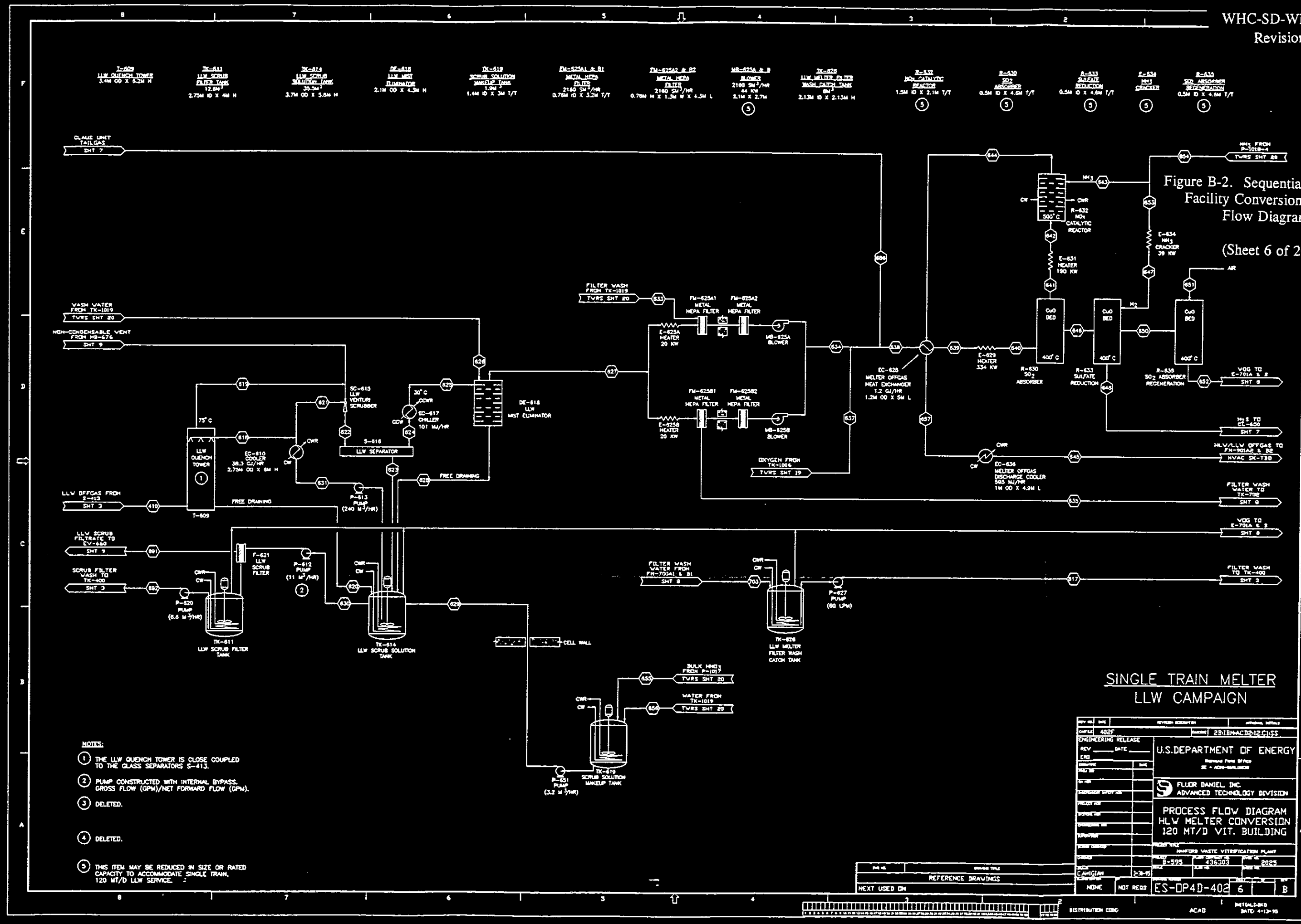

Figure B-2. Sequential Processing Facility Conversion Process Flow Diagram.

(Sheet 6 of 20)

Figure B-2. Sequential Processing Facility Conversion Process Flow Diagram.

(Sheet 7 of 20)

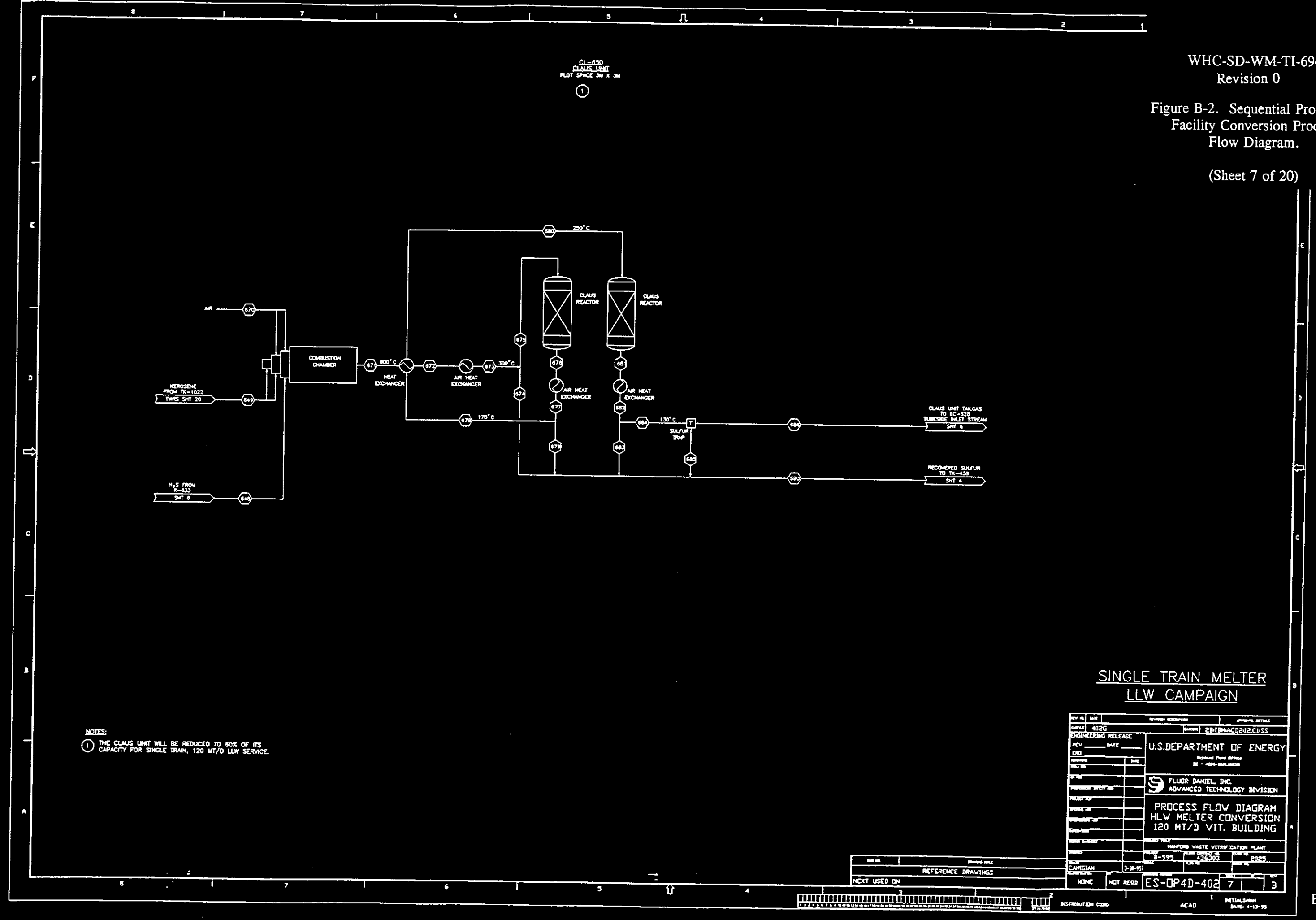

Figure B-2. Sequential Processing Facility Conversion Process Flow Diagram.

(Sheet 8 of 20)

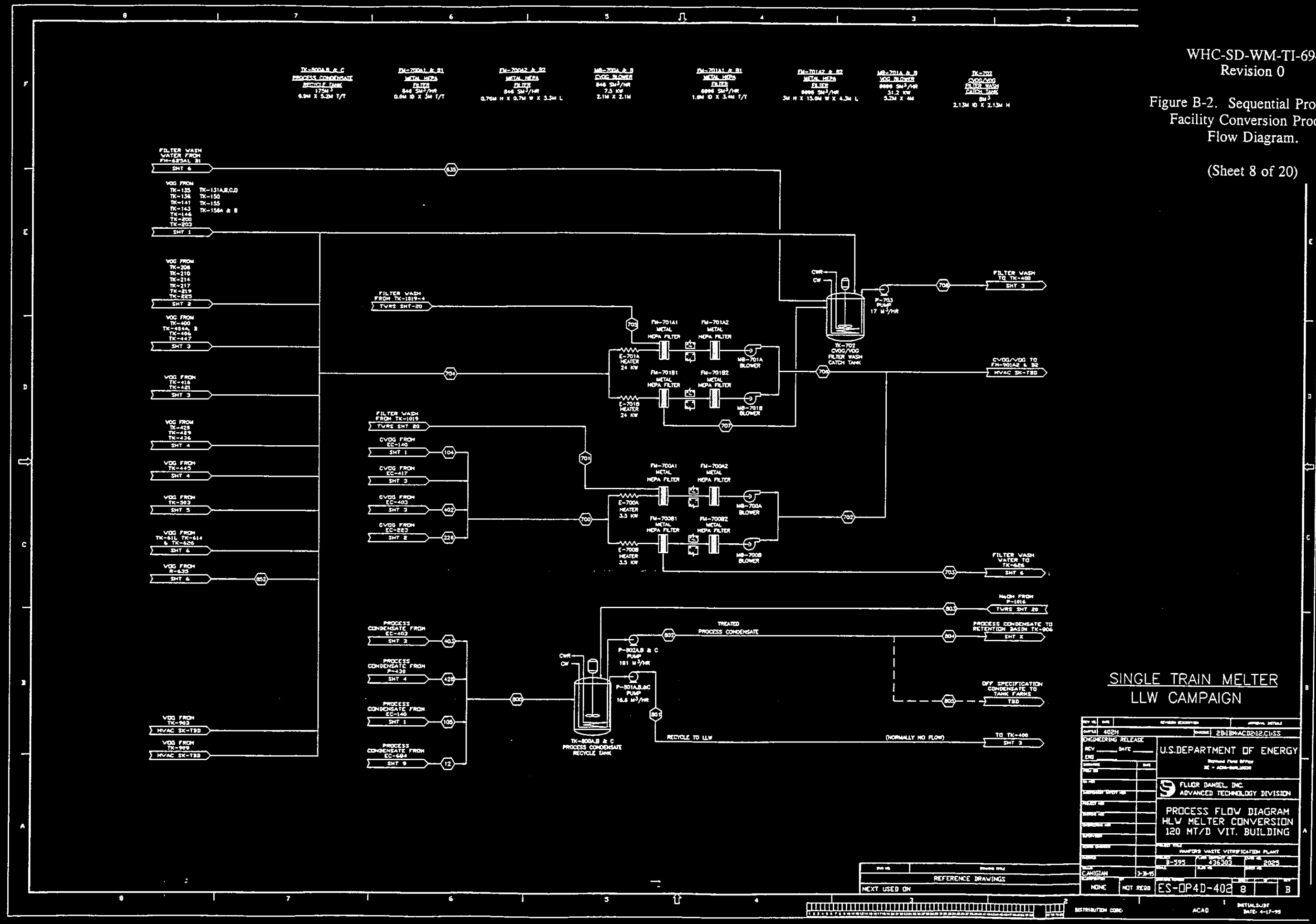

Figure B-2. Sequential Processing Facility Conversion Process Flow Diagram.

(Sheet 9 of 20)

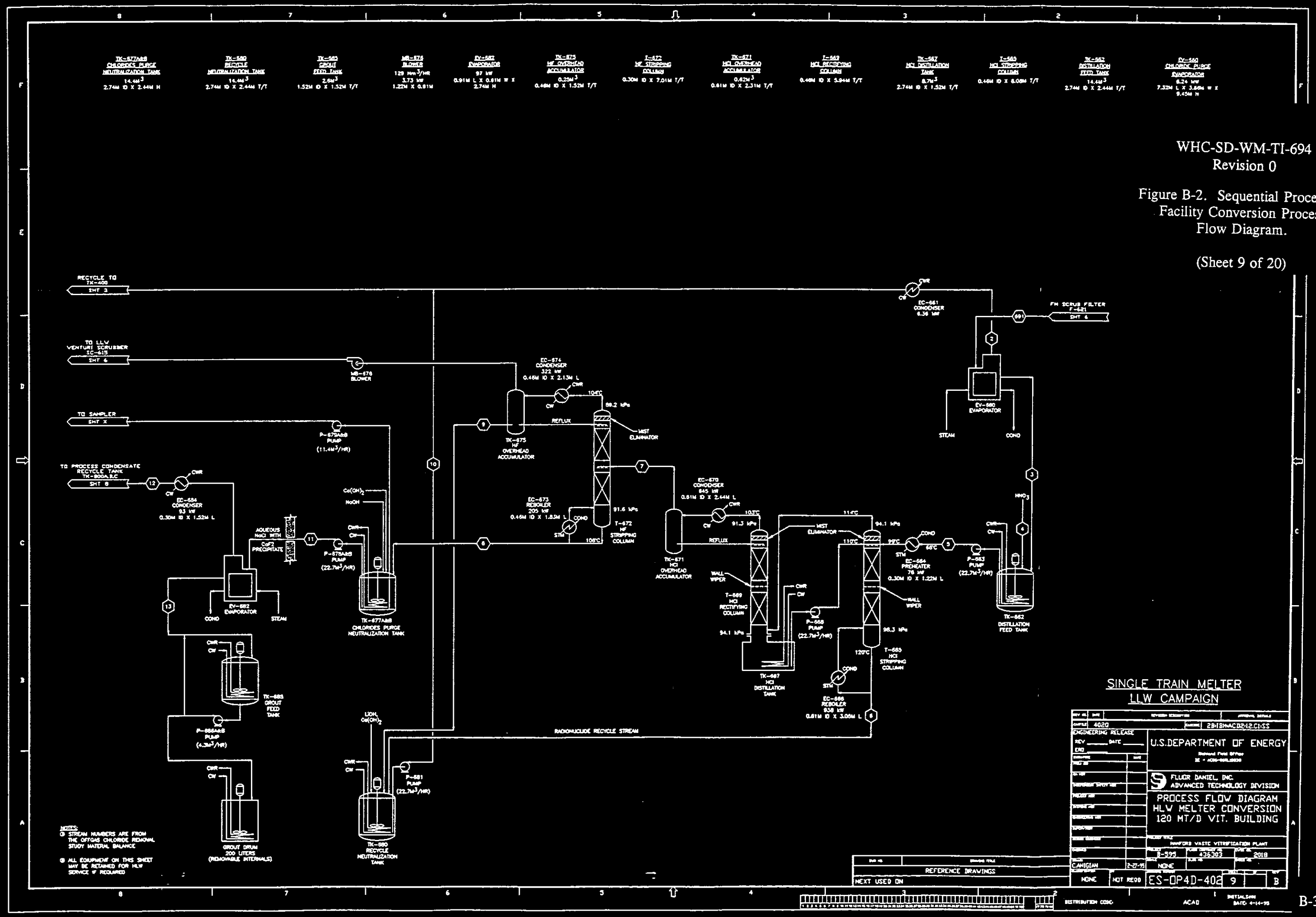

Figure B-2. Sequential Processing Facility Conversion Process Flow Diagram.

(Sheet 10 of 20)

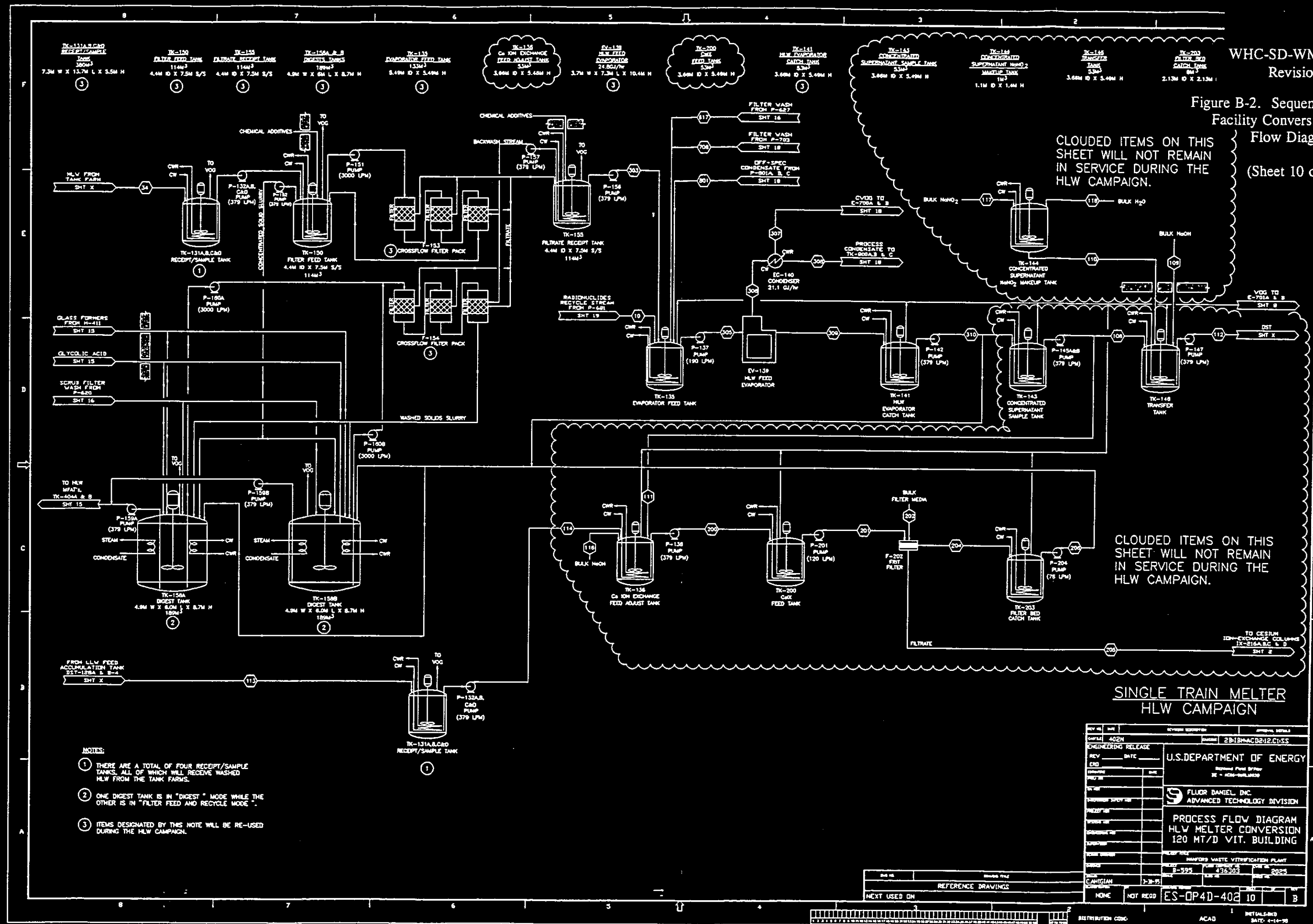

Figure B-2. Sequential Processing Facility Conversion Process Flow Diagram.

(Sheet 11 of 20)

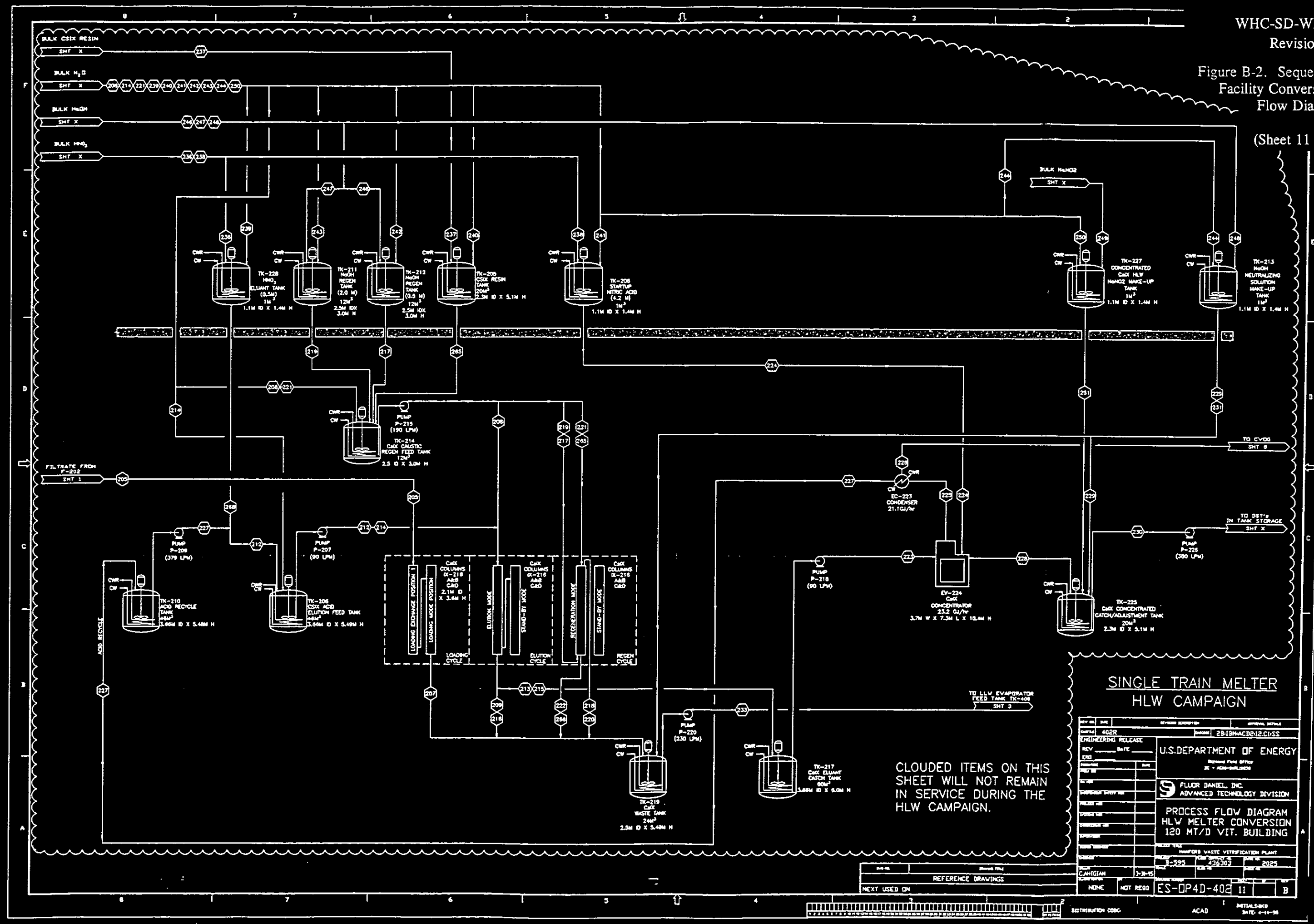

Figure B-2. Sequential Processing Facility Conversion Process Flow Diagram.

(Sheet 12 of 20)

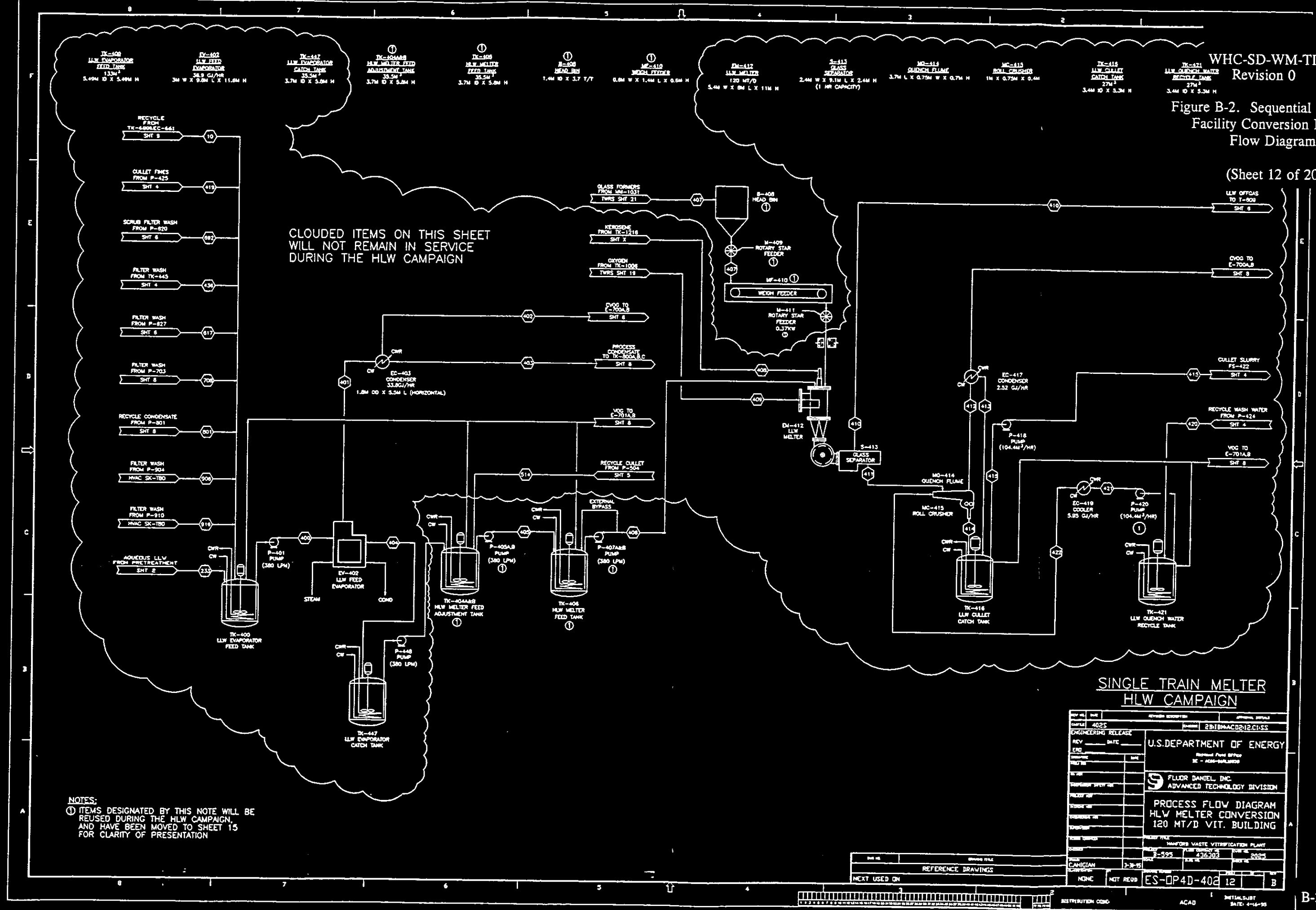

Figure B-2. Sequential Processing Facility Conversion Process Flow Diagram.

(Sheet 13 of 20)

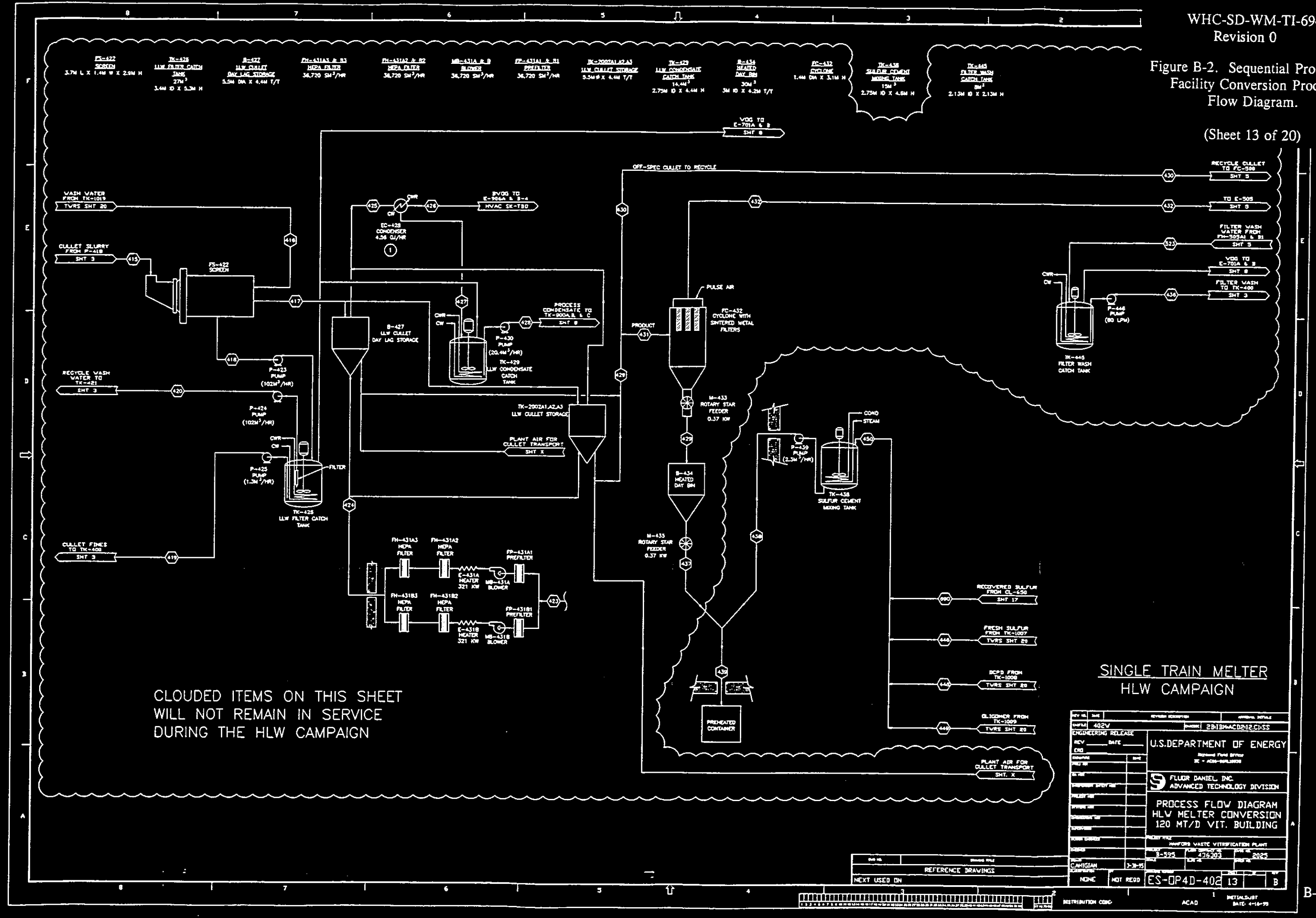

Figure B-2. Sequential Processing Facility Conversion Process Flow Diagram.

(Sheet 14 of 20)

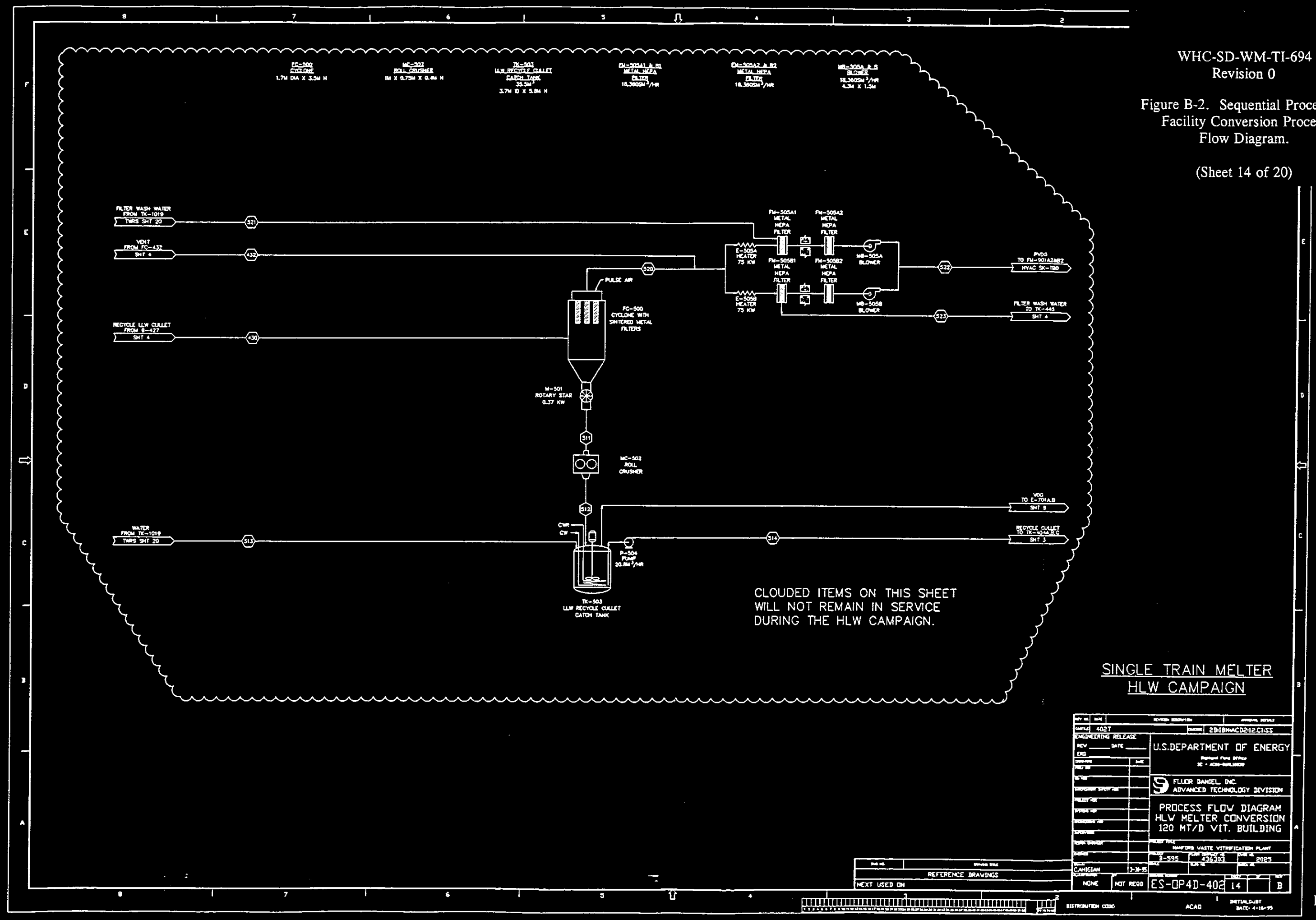

Figure B-2. Sequential Processing Facility Conversion Process Flow Diagram.

(Sheet 15 of 20)

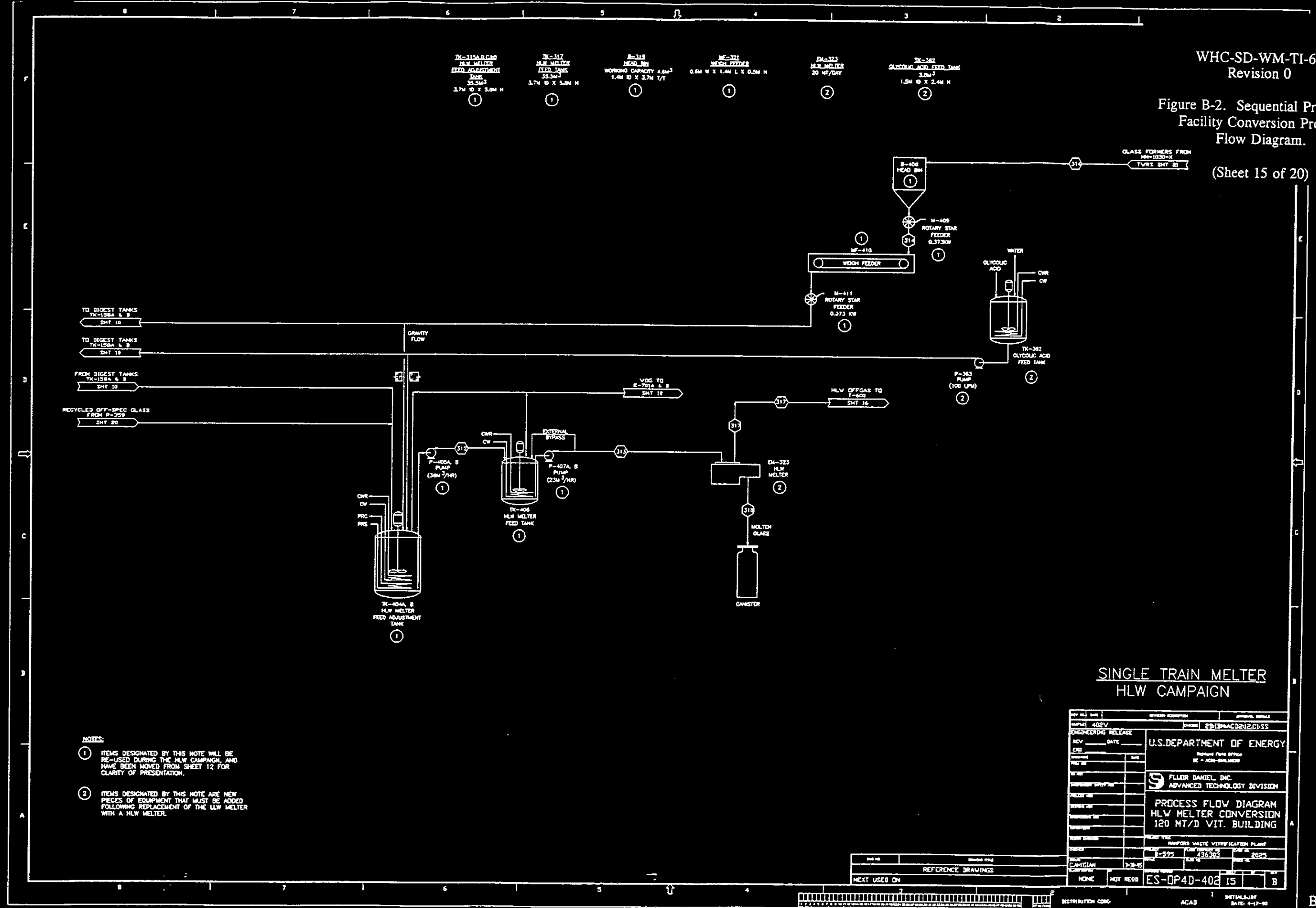

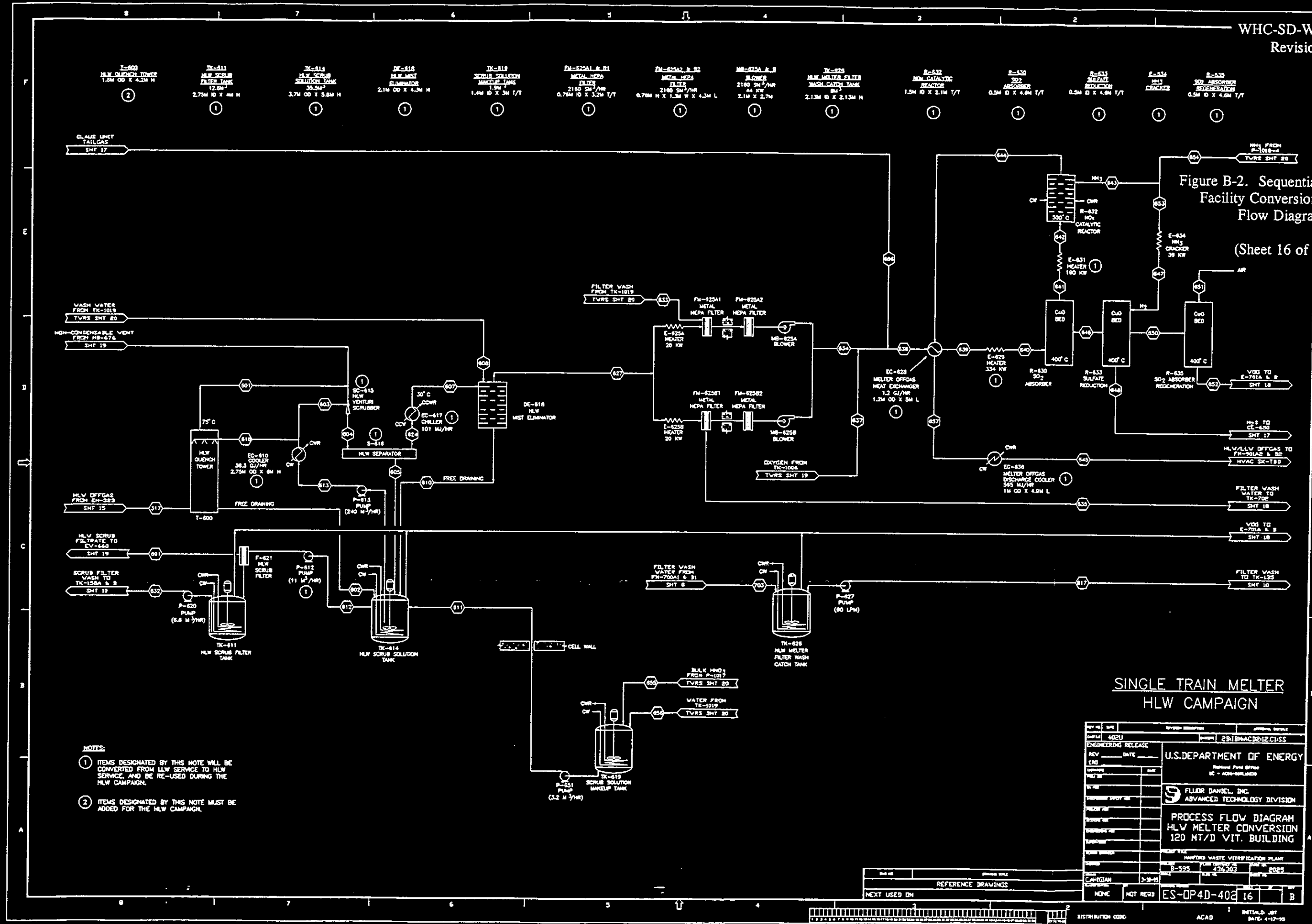

Figure B-2. Sequential Processing Facility Conversion Process Flow Diagram.

(Sheet 16 of 20)

Figure B-2. Sequential Processing Facility Conversion Process Flow Diagram.

(Sheet 17 of 20)

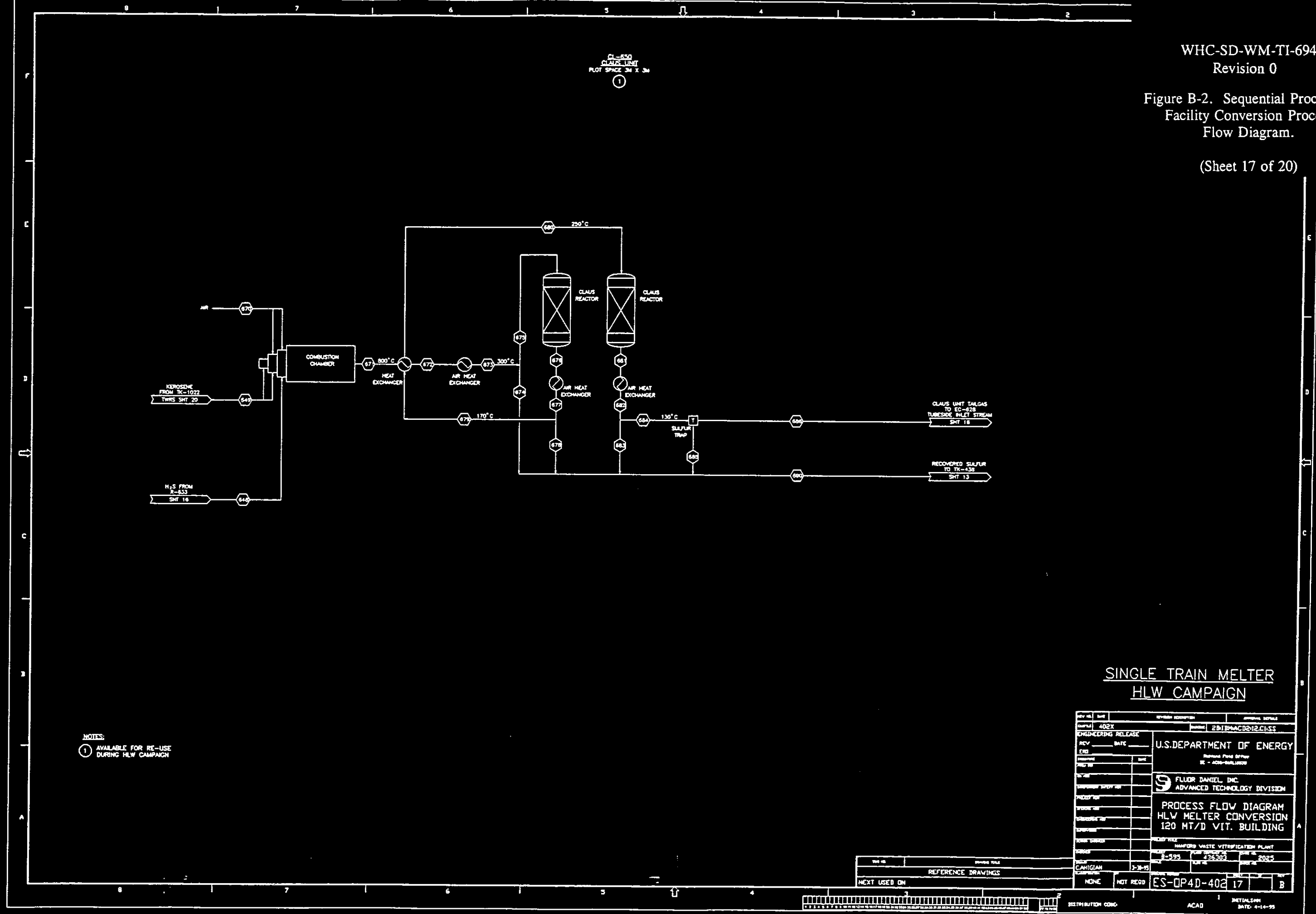

Figure B-2. Sequential Processing Facility Conversion Process Flow Diagram.

(Sheet 18 of 20)

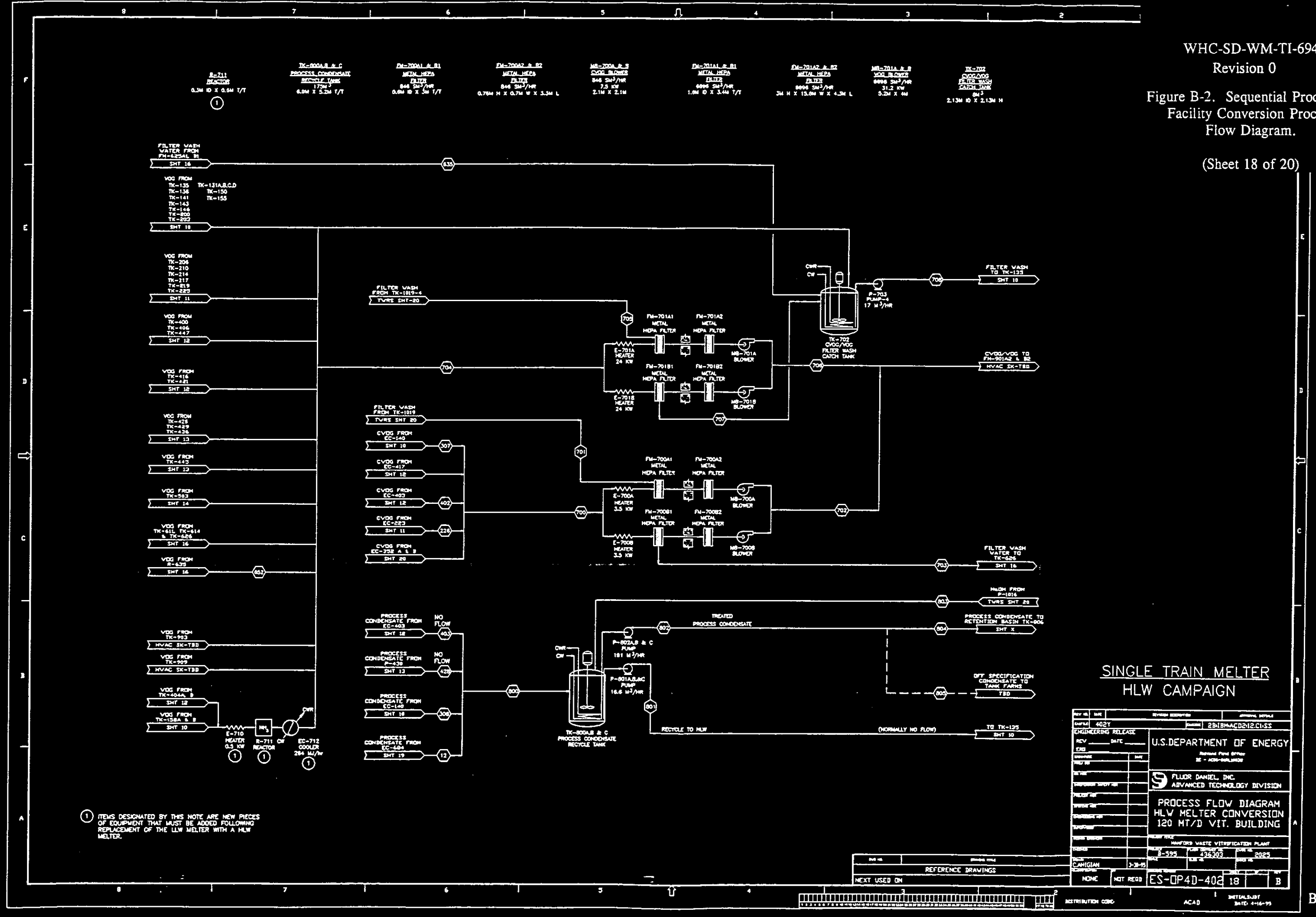

Figure B-2. Sequential Processing Facility Conversion Process Flow Diagram.

(Sheet 19 of 20)

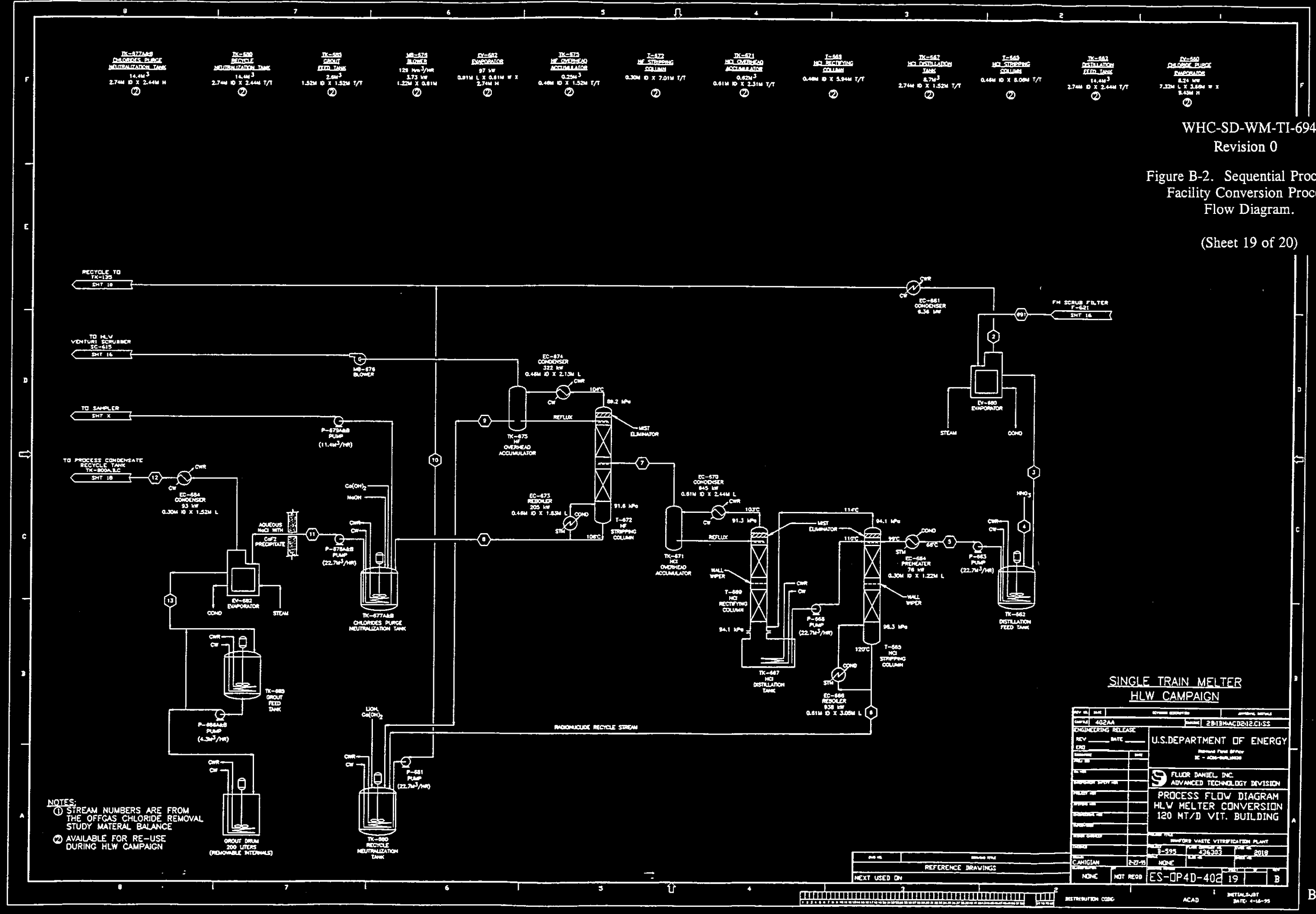

Figure B-2. Sequential Processing Facility Conversion Process Flow Diagram.

(Sheet 20 of 20)

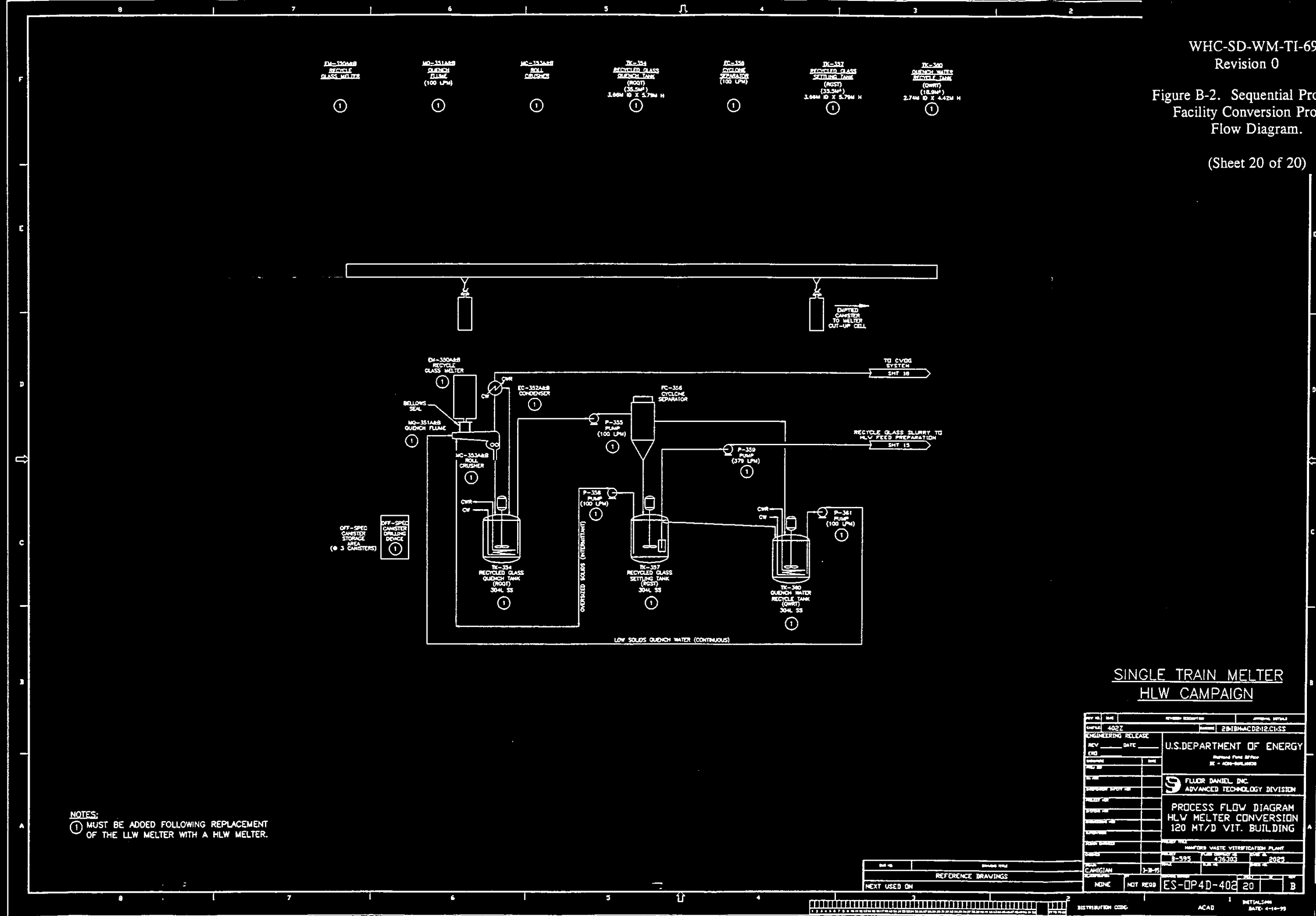

B2.0 SITE LAYOUT

The TWRS program preliminary findings of the site reevaluation recommended that the TWRS Treatment Complex be located within 200 East Area. The specific area is composed of the HWVP location or an area located west of the PUREX facility and bounded on three sides by Baltimore Avenue, First Street, and the existing rail and spur.

The current strategy is to locate the TWRS Treatment Facility and Close Shared Support Facilities within the eastern portion of this site. The Distant Shared Support Facilities would be located in the western portion of the site.

For clarification, the buildings in the TWRS program mission were segregated into areas or complexes. The largest division is the TWRS Treatment Complex. It is collective the area required for, the new process facilities, non-process facilities and distant and close shared support and auxiliary facilities required to support the TWRS processing mission.

The TWRS Treatment Complex is a portion of the TWRS Complex. It is the area required to co-locate the process facilities (e.g., separations and vitrification) and close shared support facilities. The TWRS Treatment Complex facilities are the basis for the Site Arrangement Drawing.

The Operations Area is a portion of the TWRS Treatment Complex. It co-locate the process facilities and annexed support facilities which have the potential to become contaminated. These facilities are required to be close together for process operations efficiency, safety and conduct of operations requirements.

The support facility buildings and their estimated sizes were originally defined during initial Trade Studies in 1994. Their respective envelopes were used to develop initial site arrangement and utility corridor layouts for other configurations. Further building development was undertaken in the Trade Study, CWBS 2001 "Process Support Infrastructure and Definitions," to identify functional requirements and to confirm utility requirements and support facility building sizes. The basis for the building development was refined for this concept and the sizes adjusted accordingly.

Figure B-2 contains the Site Arrangement Drawing showing the layout for the selected site. Support facilities initially defined in the Trade Study CWBS 2001 "TWRS Process Support Infrastructure and Definition" and the process facilities as defined by this study, were placed into the selected site. The arrangement of these buildings evolved from functional and adjacency requirements as examined by that study. In some cases, the technical requirements associated with the functions or systems within each of the buildings determined their plot location.

This page intentionally left blank.

Figure B-3. TWRS Treatment Complex Site Plan.

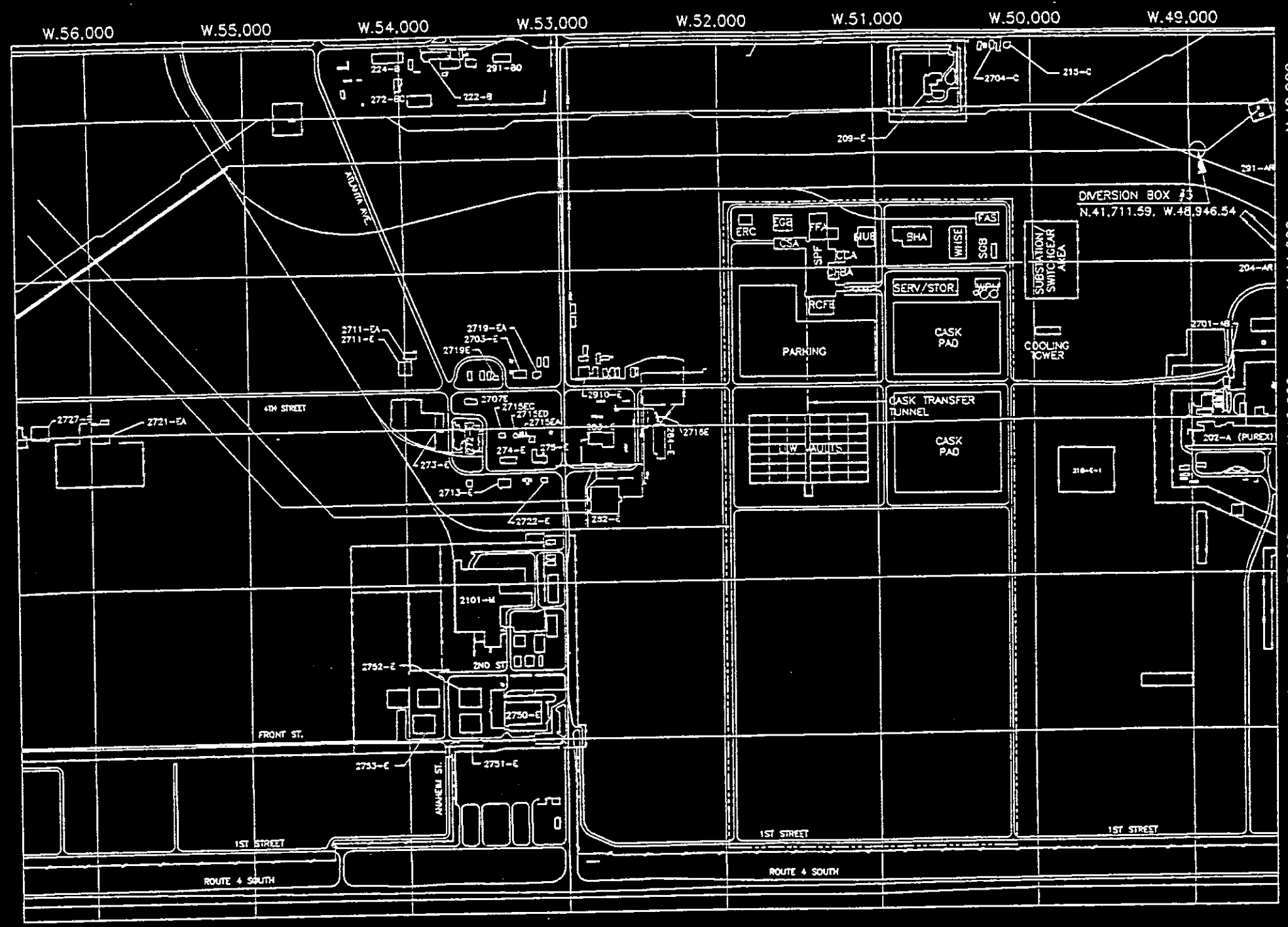

200 EAST AREA

LEGEND

SPF	SEQUENTIAL PROCESSING FACILITY
RCFE	REGULATED COMPLEX/FACILITY ENTRY AND ANALYTICAL LAB ANNEX
CSA	CONTAINER STAGING ANNEX
CFBR	CONTACT FILTER/BLOWER ROOM ANNEX
FFA	FAN/FILTER ANNEX
CCA	COLD CHEMICAL ANNEX
EGB	EMERGENCY GENERATOR BUILDING
ERC	EMERGENCY RESPONSE CENTER
BHA	BULK HANDLING AREA
MUB	MECHANICAL UTILITY BUILDING
SERV/STOR	SERVICE/STORAGE YARD
SGB	SWITCHGEAR BUILDING
WHSE	WAREHOUSE
WPH	WATER PUMPHOUSE
FAS	FABRICATION & ASSEMBLY SHOP

NOTE:
1. OVERALL AREA OF THE TWRS TREAMENT COMPLEX IS ACRES.

0 100 200 300 400 500
GRAPHIC SCALE IN METERS

0 100 400 700 1000 1300 1600
GRAPHIC SCALE IN FEET

U.S.DEPARTMENT OF ENERGY

FLUOR DANIEL, INC.
ADVANCED TECHNOLOGY DIVISION

SINGLE LINE
TWRS TREATMENT COMPLEX
SITE PLAN

TANK WASTE REMEDIATION SYSTEM

J.THOMPSON 4-3-95 1:3000 436.03 2025

NONE NOT REQD ES-SITE4D-1 1 1 A

REFERENCE DRAWINGS
NEXT USED ON

DISTRIBUTION CODE ACAD INITIALS: JBT DATE: 4-24-95

The process and support facilities were situated with consideration for construction, staging and facility requirements of the TWRS Treatment Complex. Sufficient space to allow for installation of underground piping corridors, fire water loops, sanitary water supply, sanitary sewer systems, and electrical systems was provided in the study.

B2.1 SITE CONSTRUCTION

The site arrangement was developed to allow for staged construction or phased construction of the TWRS Treatment Complex. Study drawings were completed to review the space required for the vitrification building. Overall site clearing and grubbing drawings were completed to estimate the potential site disturbance. Sketches showing likely approaches to locating temporary facilities were completed.

Provisions were made to allow for site construction to continue while the Separations/vitrification facility became operational. Support buildings were set back from the roads by 15.2 to 30.5 m to allow for the construction of piping and electrical utility corridors. Existing systems located above and below grade in the site may require relocation to allow for separation of electrical and piping systems.

Temporary laydown areas will be required to support site construction. To maximize efficiency and minimize costs associated with transportation of raw materials to the construction area the lay down area is in proximity to the work area.

B2.1.8 Infrastructure

The infrastructure layout allows for phased construction of the site and allows for access and maintainability. Between each of the facilities there is at least 15.2 m of easement to allow for underground and/or above ground piping and electrical systems. Within the site boundaries, electrical and piping systems are kept separate. Electrical systems are located on one side of the site roads while piping systems are located on the other side.

Tie-ins to existing auxiliary systems will be from headers and connections along Fourth Street. The site feed system is attached to a diversion box located northeast of the site. The diversion box is part of the new Inter-Area Transfer Piping (W-058).

The rail system is an integral requirement of the site arrangement. The BHA, FAS, and Warehouses necessitate rail access. Bulk chemicals and large equipment will most likely enter the site by rail. Large and heavy items such as new melters, canisters and casks will be transported from one location on the site to another by donkey engine and rail car or by truck and trailer. In the site arrangement, access to the facilities is provided for from existing rail lines, spurs, and roads.

B2.1.9 Land

The TWRS Treatment Complex site arrangement covers less than 100 acres of land. To the east and west the boundaries are established by existing B-Plant and Purex Facility. To the north, the site can be expanded but must contend with a main rail spur and the new inter area transfer lines (W-058). To the south, the site has additional space, approximately 100 acres, available. Support facilities can be moved further south in this area to provide additional space near and around the Separations/vitrification facility. The location can also be used for construction (spoils pile, trailers, fabrication and laydown areas) and future usage (cask pads, etc.). The TWRS Treatment Complex site is bounded by Route 4 on the south. Temporary construction facilities could be built south of the highway on open land if necessary, for an interim time to allow for additional site growth.

The Civil/Structural site design criteria for non-reactor DOE facilities at Hanford is provided by HPS SDC-4.1, Design Loads for Facilities. This document implements DOE Order 5480.28, Natural Phenomena Hazard Mitigation. It provides uniform wind and seismic design criteria, which conforms to published DOE Natural Phenomena Hazard Mitigation requirements. No distinction is made relating to separate locations on the Hanford Site.

B3.0 SUPPORT FACILITIES

B3.1 REGULATED COMPLEX/FACILITY ENTRY (RCFE)

The RCFE for the Separations/vitrification facility is the main entrance to the site and process facility. It is an annex attached to the main process structure. All personnel entering the Complex must first pass through the RCFE. Although not a requirement, it would be preferred to limit the travel distance of onsite personnel to and from the RCFE and their assigned work location. It houses the room functions for the site and facility personnel. The RCFE's primary function is to control personnel access and monitor exiting personnel for potential contamination. It also houses Health Physics offices, Analytical Laboratories, a counting room and main control room. The RCFE requires direct personnel access to the main process areas.

B3.2 CONTACT FILTER AND BLOWER ROOM (CFBR)

The dedicated CFBR is annexed to the process facility. The CFBR contains the second stage filters and blowers for the in-cell offgas metal filters. The room requires external access for remote removal of large, contaminated filters and equipment. The room is required to be as close as possible to the vitrification facility to minimize the length of ducting and embedded piping.

B3.3 FAN/FILTER BUILDING

The dedicated Fan/Filter Building is attached to the process facility. The Fan/Filter Building's primary function is to house the Zone 1 exhaust filters and fans. Also located in the building is a filter decontamination room, health physics area, instrument room and continuous air effluent monitoring (CAEM) rooms. The building's safety classification is consistent with the safety classification of the Zone 1 exhaust system.

The filters housed in the Fan/Filter Building are required by DOE 6430.1A Section 1500-99.02 to be "as close to the source as possible" to limit or minimize contamination of the air transportation system. This requirement is met by having the dedicated Fan/Filter Building annexed to the Separations/ vitrification Building.

B3.4 EMERGENCY GENERATOR BUILDING

A dedicated Emergency Generator Building is provided at the process facility. It provides emergency power to those functions required to maintain confinement and bring the complex into a safe shutdown condition during and after a loss of power. The Exhaust Air Treatment System in the Fan/Filter Building is the largest load requiring emergency power. For that reason, the Emergency Generator Building is located as close as possible, without interfering with the process operation, to the Fan/Filter Building.

B3.5 CONTAINER STAGING ANNEX (CSA)

The Container Staging Annex is an annex to the vitrification facility. The LLW containers and the HLW canisters and casks will move from the Shipping and Receiving Building to the CSA for cleaning, inspection, lag storage and movement to the container load in station, canister load in stations or cask loading station. The building ensures quality and contamination control for the containers. The building is adjacent to the canister load in stations and over pack load out station. This allows for the CSA overhead cranes to lower the canisters into the building and to raise the over packs out of the facility.

B3.6 LOW-LEVEL WASTE VAULTS

The LLW vaults will store the LLW product. A below grade tunnel will be used to transport containers of a sulfur polymer cement (SPC) and cullet from the Separations/vitrification building to the vaults. This tunnel will also be used to cool the SPC and cullet. A minimum tunnel length of 250 m is required to provide adequate time for cooling. Shortening this length would require additional HVAC to lower the tunnel temperature so as to provide adequate cooling. A longer tunnel would increase construction

and operating costs. The tunnel is required to provide shielding and prevent the spread of contamination. The tunnel to the vaults is sealed after the LLW production run.

B3.7 EMERGENCY RESPONSE CENTER (ERC)

If warranted by results of safety analyses an Emergency Response Center (ERC) would be provided for redundant safe shutdown and accident recovery monitoring.

B3.8 COLD CHEMICAL ANNEX (CCA)/BULK HANDLING AREA (BHA)

The main function of the CCA and the Bulk Handling Area is to provide cold chemical receipt, storage, preparation and distribution to the TWRS Treatment Complex process facility. The length of solids transport lines to the users must be minimized to avoid the problems inherent to solids transport such as line obstruction and erosion. Additionally, the length of the liquid transport lines must be minimized to avoid substantial leaks of toxic chemicals. Therefore, the CCA is attached to the process facility and the BHA must be located close to the processing facility.

B3.9 MECHANICAL UTILITIES BUILDING (MUB)

The MUB houses the Utility Steam System, the Compressed Air System, the Demineralized Water System, and the HVAC Chilled Water System. From a process standpoint, it is desirable to locate all of these systems in proximity to the main users the process facility. Locating these systems far from the processing facility, especially distant site locations, would require steam super heating, water cooling to a lower temperature, heavier line insulation and tracing, longer transfer lines, and higher transfer pressures, all of which lead to a higher capital and operating cost. Therefore, this building is located close to the process facility.

B3.10 SWITCHGEAR BUILDING

The electrical Switchgear Building and substation are fed from the main electrical lines coming from the north and therefore should be situated for ease of access. To limit the length of the power feed lines, the electrical equipment is located near the primary user, the vitrification facility.

B3.11 COOLING TOWER

The Cooling Tower should be located to the southeast portion of the TWRS Treatment Complex. Consideration of the prevailing wind direction was given when determining this location. Drift from the cooling tower should not be allowed to travel

across construction areas, operational facilities, parking lots or operation areas. Condensate plumes should not be allowed to "fog" or obscure visibility along facility road systems. The prevailing wind is from the northwest. Cooling water can be pumped from any location to the users. Therefore, the Cooling Tower does not necessarily need to be located on the site and can be located elsewhere if required.

B3.12 WATER PUMPHOUSE

There are no technical requirements for close proximity of the water tanks or water pump house to the process or ancillary buildings. The main consideration for the firewater system is reliability and not adjacency to the system users.

B3.13 WAREHOUSE

The Warehouse is considered to be a distant shared facility. There are no technical requirements for the building to be specifically located on the site. The building must have truck and rail access to allow for movement of items in and out of the site. The building will also function as the shipping and receiving office for the site. Should the warehouse building be used to support construction activities, it should be located in a position which can best provide for these activities.

B3.14 FABRICATION AND ASSEMBLY SHOP

The Fabrication and Assembly Shop is considered to be a distant shared facility. There are no technical requirements for the shop to be specifically located on the site. The only consideration is that the shop requires railroad access to allow for movement of large and/or heavy pieces of equipment. Should the building be used to support construction activities, it should be located in a position which can best provide for these activities.

B3.15 SERVICE/STORAGE YARD

The Service/Storage Yard is considered to be a distant shared facility. It provides for outdoor onsite storage of equipment, vehicles and materials not required to be stored inside the warehouse. It provides outdoor service and maintenance for vehicles, equipment and materials not requiring indoor major repairs. Should the yard be used to support construction activities, it should be located in a position which can best provide for these activities.

B3.16 HIGH-LEVEL WASTE CASK PADS

The HLW Cask Pads allow for interim storage of the HLW product. HLW casks will be moved by special transporters from the HLW Canister/ Cask Staging Building to the Cask Pads. Location of storage pads should be near the process facility to limit the travel time for the transporter. Extensive travel time for the transporter may require additional transporters or other means of transportation to fulfill the Total Operating Efficiency requirements. Shielding and personnel protection also place requirements on the casks, cask pads and surrounding area.

The casks used for interim storage of the HLW glass canisters does not provide sufficient shielding for personnel contact. A cost analysis of these various shielding options was conducted. The results of this study indicated that the most cost effective solution to this problem is a full berm around the cask pad for personnel protection.

APPENDIX C

EQUIPMENT LIST

Equipment sizes are based upon information from the construction of the Defense Waste Production Facility (DWPF) at the Savannah River Site. This information includes capacity/flow rate, physical size, material of construction, and power requirements. The flow rates and energy requirements listed for individual pieces of equipment are taken from data in Appendix B.

This page intentionally left blank.

Single Line TWRS Treatment Plant Equipment List

6/13/95

Equipment Description	Equipment Designation	Capacity	Material of Construction	Dimensions	Comment
LLW EVAPORATOR FEED TANK	TK-400	133 m3	316L SS	5.5 m ID X 5.5 m H	REMOVED FROM SERVICE FOLLOWING CONVERSION
PUMP	P-401	379 LPM, 345 kPa	316L SS	MOUNTED ON TK-400	REMOVED FROM SERVICE FOLLOWING CONVERSION.
LLW Feed Evaporator	EV-402	36.9 GJ/hr	HASTELLOY C-22	3 m W X 9.8 m L X 11.6 m H	REMOVED FROM SERVICE FOLLOWING CONVERSION.
CONDENSER	EC-403	33.8 GJ/hr	316L SS	1.8 m OD X 5.5 m L	REMOVED FROM SERVICE FOLLOWING CONVERSION.
LLW Melter Feed Adjustment Tank	TK-404A	35.5 m3	HASTELLOY C-22	3.7 m ID X 5.8 m H	Reused "AS IS" following conversion.
Pump	P-405A	379 LPM, 345 kPa	316L SS	MOUNTED ON TK-404A	Reused "AS IS" following conversion.
LLW Melter Feed Tank	TK-406	35.5 m3	HASTELLOY C-22	3.7 m ID X 5.8 m H	Reused "AS IS" following conversion.
Pump	P-407A	379 LPM, 690 kPa	316L SS	MOUNTED ON TK-406	Reused "AS IS" following conversion.
Pump	P-407B	379 LPM, 690 kPa	316L SS	MOUNTED ON TK-406	Reused "AS IS" following conversion.
HEAD BIN	B-408	5.5 m3	304L SS	1.4 m ID X 3.7 m T/T	Reused "AS IS" following conversion.
ROTARY STAR FEEDER	M-409	20 cm X 0.37 kW	304L SS	0.6 m X 0.7 m X 0.8	Reused "AS IS" following conversion.

Single Line TWRS Treatment Plant Equipment List

6/13/95

Equipment Description	Equipment Designation	Capacity	Material of Construction	Dimensions	Comment
Weigh Feeder	MF-410	2.52-5.04 mt/hr	304L SS	0.6 m W x 1.4 m L X 0.6 m H	Reused "AS IS" following conversion.
ROTARY STAR FEEDER	M-411	20 cm X 0.37 kW	304L SS	0.6 m X 0.7 m X 0.8 m	Reused "AS IS" following conversion.
LLW Melter	EM-412	120 MT/D	REFRACTORY LINED	5.4 m W X 8 m L X 11 m H	REPLACED BY HLW MELTER EM-323 DURING CONVERSION
Glass Separator	S-413	1 hr/48 kW	REFRACTORY LINED	2.4 m W X 9.1 m L X 2.4 m H	REMOVED FROM SERVICE FOLLOWING CONVERSION
Quench Flume	MQ-414	102 m3/hr	304L SS	3.7 m L X 0.75 m W X 0.7 m	REMOVED FROM SERVICE FOLLOWING CONVERSION
Roll Crusher	MC-415	5.09 mt/hr, 22.3 kW	304L SS	1 m X 0.75 m X 0.4 m H	REMOVED FROM SERVICE FOLLOWING CONVERSION
LLW CULLET CATCH TANK	TK-416	27 m3	316L SS	3.4 m ID X 5.3 m H	REMOVED FROM SERVICE FOLLOWING CONVERSION
CONDENSER	EC-417	2.52 GJ/hr	316L SS		REMOVED FROM SERVICE FOLLOWING CONVERSION
PUMP	P-418	104.4 m3/hr, 245 kPa	316L SS		REMOVED FROM SERVICE FOLLOWING CONVERSION
COOLER	EC-419	5.95 GJ/hr	316L SS		REMOVED FROM SERVICE FOLLOWING CONVERSION
PUMP	P-420	104.4 m3/hr, 245 kPa	316L SS		REMOVED FROM SERVICE FOLLOWING CONVERSION

Single Line TWRS Treatment Plant Equipment List

6/13/95

Equipment Description	Equipment Designation	Capacity	Material of Construction	Dimensions	Comment
LLW QUENCH WATER RECYCLE TANK	TK-421	27 m3	316L SS		REMOVED FROM SERVICE FOLLOWING CONVERSION
Screen	FS-422	85 m3/hr, 2.2 kW	304L SS		REMOVED FROM SERVICE FOLLOWING CONVERSION
PUMP	P-423	102 m3/hr, 2.2 kW	316L SS		REMOVED FROM SERVICE FOLLOWING CONVERSION
PUMP	P-424	102 m3/hr, 2.2 kW	316L SS		REMOVED FROM SERVICE FOLLOWING CONVERSION
PUMP	P-425	1.3 m3/hr, 175 kPa	316L SS		REMOVED FROM SERVICE FOLLOWING CONVERSION
LLW FILTER CATCH TANK	TK-426	27 m3	316L SS		REMOVED FROM SERVICE FOLLOWING CONVERSION
LLW Cullet Day Lag Storage	B-427	240 MT	304L SS		REMOVED FROM SERVICE FOLLOWING CONVERSION
CONDENSER	EC-428	4.56 GJ/hr	316L SS		REMOVED FROM SERVICE FOLLOWING CONVERSION
LLW CONDENSATE CATCH TANK	TK-429	14.4 m3	316L SS		REMOVED FROM SERVICE FOLLOWING CONVERSION
PUMP	P-430	20.4 m3/hR, 175 kPa	316L SS		REMOVED FROM SERVICE FOLLOWING CONVERSION
HEATER	E-431A	321 kW	CARBON STEEL		REMOVED FROM SERVICE FOLLOWING CONVERSION

Single Line TWRS Treatment Plant Equipment List

6/13/95

Equipment Description	Equipment Designation	Capacity	Material of Construction	Dimensions	Comment
BLOWER	MB-431A	36,720 sm3/hr, 1,812 BkW	CARBON STEEL		ROOTS BLOWER - REMOVED FROM SERVICE FOLLOWING CONVERSION
PREFILTER	FP-431A1	36,720 sm3/hr	304L SS		REMOVED FROM SERVICE FOLLOWING CONVERSION
HEPA FILTER	FH-431A2	36,720 sm3/hr	304L SS		PALL METAL FILTER REMOVED FROM SERVICE FOLLOWING CONVERSION
HEPA FILTER	FH-431A3	36,720 sm3/hr	304L SS		PALL METAL FILTER REMOVED FROM SERVICE FOLLOWING CONVERSION
HEATER	E-431B	321 kW	CARBON STEEL		REMOVED FROM SERVICE FOLLOWING CONVERSION
BLOWER	MB-431B	36,720 sm3/hr, 1,812 BkW	CARBON STEEL		ROOTS BLOWER - REMOVED FROM SERVICE FOLLOWING CONVERSION
PREFILTER	FP-431B1	36,720 sm3/hr	304L SS		REMOVED FROM SERVICE FOLLOWING CONVERSION
HEPA FILTER	FH-431B2	36,720 sm3/hr	304L SS		PALL METAL FILTER - REMOVED FROM SERVICE FOLLOWING CONVERSION
HEPA FILTER	FH-431B3	36,720 sm3/hr	304L SS		PALL METAL FILTER - REMOVED FROM SERVICE FOLLOWING CONVERSION
CYCLONE WITH SINTERED METAL FILTER	FC-432	2,244 sm3/hr	304L SS		REMOVED FROM SERVICE FOLLOWING CONVERSION
ROTARY STAR FEEDER	M-433	20 cm, 0.37 kW	304L SS		REMOVED FROM SERVICE FOLLOWING CONVERSION

Single Line TWRS Treatment Plant Equipment List

6/13/95

Equipment Description	Equipment Designation	Capacity	Material of Construction	Dimensions	Comment
HEATED DAY BIN	B-434	30 m3	304L SS		REMOVED FROM SERVICE FOLLOWING CONVERSION
ROTARY STAR FEEDER	M-435	20 cm, 0.37 kW	304L SS		REMOVED FROM SERVICE FOLLOWING CONVERSION
SULFUR CEMENT MIXING TANK	TK-438	15 m3	304L SS		MAY REMAIN IN SERVICE (FOR RECOVERED SULFUR) IN HLW OPERATION.
PUMP	P-439	2.3 m3/hr, 520 kPa	304L SS		MAY REMAIN IN SERVICE (FOR RECOVERED SULFUR) IN HLW OPERATION.
FILTER WASH CATCH TANK	TK-445	8 m3	316L SS		REMOVED FROM SERVICE FOLLOWING CONVERSION
PUMP	P-446	60 LPM	316L SS		REMOVED FROM SERVICE FOLLOWING CONVERSION
CYCLONE WITH SINTERED METAL FILTER	FC-500	1,740 m3/hr	304L SS		REMOVED FROM SERVICE FOLLOWING CONVERSION
ROTARY STAR FEEDER	M-501	20 cm, 0.37 kW	304L SS		REMOVED FROM SERVICE FOLLOWING CONVERSION
ROLL CRUSHER	MC-502	5.09 mt/hr	304L SS		REMOVED FROM SERVICE FOLLOWING CONVERSION
RECYCLE CULLET CATCH TANK	TK-503	35.5 m3	316L SS		REMOVED FROM SERVICE FOLLOWING CONVERSION
PUMP	P-504	20.8 m3/hr, 175 kPa	316L SS		REMOVED FROM SERVICE FOLLOWING CONVERSION

Single Line TWRS Treatment Plant Equipment List

6/13/95

Equipment Description	Equipment Designation	Capacity	Material of Construction	Dimensions	Comment
HEATER	E-505A	75 kW	316L SS		REMOVED FROM SERVICE FOLLOWING CONVERSION
BLOWER	MB-505A	18,360 sm3/hr, 648 BkW	316L SS		ROOTS BLOWER - REMOVED FROM SERVICE FOLLOWING CONVERSION
METAL HEPA FILTER	FM-505A1	18,360 sm3/hr	316L SS		PALL METAL FILTER - REMOVED FROM SERVICE FOLLOWING CONVERSION
METAL HEPA FILTER	FM-505A2	18,360 sm3/hr	316L SS		PALL METAL FILTER - REMOVED FROM SERVICE FOLLOWING CONVERSION
HEATER	E-505B	75 kW	316L SS		REMOVED FROM SERVICE FOLLOWING CONVERSION
BLOWER	MB-505B	18,360 sm3/hr, 648 BkW	316L SS		ROOTS BLOWER - REMOVED FROM SERVICE FOLLOWING CONVERSION
METAL HEPA FILTER	FM-505B1	18,360 sm3/hr	316L SS		PALL METAL FILTER - REMOVED FROM SERVICE FOLLOWING CONVERSION
METAL HEPA FILTER	FM-505B2	18,360 sm3/hr	316L SS		PALL METAL FILTER - REMOVED FROM SERVICE FOLLOWING CONVERSION
LLW QUENCH TOWER	T-609	8,570 sm3/hr	6" REFRACTORY LINED INCONEL 690		REMOVED FROM SERVICE FOLLOWING CONVERSION.
COOLER	EC-610	38.3 GJ/hr	HASTELLOY C-22 TUBE, 304L SS SHELL		REUSED "AS IS" FOLLOWING CONVERSION.
Pump	P-612	11 m3/hr, 160 kPa	HASTELLOY C-22		REUSED "AS IS" FOLLOWING CONVERSION.

Single Line TWRS Treatment Plant Equipment List

6/13/95

Equipment Description	Equipment Designation	Capacity	Material of Construction	Dimensions	Comment
Pump	P-613	240 m3/hr, 415 kPa	HASTELLOY C-22		REUSED "AS IS" FOLLOWING CONVERSION.
LLW Scrub Solution Tank	TK-614	35.5 m3	HASTELLOY C-22		REUSED "AS IS" FOLLOWING CONVERSION.
LLW Venturi Scrubber	SC-615	3.35 mt/hr (GAS), 13 m3/hr	HASTELLOY C-22		REUSED "AS IS" FOLLOWING CONVERSION.
LLW Separator	S-616	3.35 mt/hr (GAS), 13 m3/hr	HASTELLOY C-22		REUSED "AS IS" FOLLOWING CONVERSION.
Chiller	EC-617	101 MJ/hr	HASTELLOY C-22 TUBE, 304L SS SHELL		REUSED "AS IS" FOLLOWING CONVERSION.
LLW MIST ELIMINATOR	DE-618	1.819 sm3/hr	HASTELLOY C-22		REUSED "AS IS" FOLLOWING CONVRESION.
SCRUB SOLUTION MAKEUP TANK	TK-619	1.9 m3	304L SS		REUSED "AS IS" AFTER CONVERSION
Pump	P-620	6.6 m3/hr, 41 kPa	HASTELLOY C-22		REUSED "AS IS" AFTER CONVERSION (FOR CHLORIDE PURGE OPERATION).
HEATER	E-625A	20 kW	304L SS		REUSED "AS IS" AFTER CONVERSION
BLOWER	MB-625A	2,160 sm3/hr, 44 kW	304L SS		SIMILAR TO HWVP, BL-14A-001VA/VB - REUSED "AS IS" AFTER CONVERSION
METAL HEPA FILTER	FM-625A1	2,160 sm3/hr	316L SS		SIMILAR TO HWVP, FL-14A/B-001V - REUSED "AS IS" AFTER CONVERSION

Single Line TWRS Treatment Plant Equipment List

6/13/95

Equipment Description	Equipment Designation	Capacity	Material of Construction	Dimensions	Comment
METAL HEPA FILTER	FM-625A2	2.160 sm3/hr	304L SS		SIMILAR TO HWVP, FH-14A-002 - REUSED "AS IS" AFTER CONVERSION
HEATER	E-625B	20 kW	304L SS		SIMILAR TO HWVP, HT-15G-002 - REUSED "AS IS" AFTER CONVERSION
BLOWER	MB-625B	2.160 sm3/hr, 44 kW	304L SS		SIMILAR TO HWVP, BL-14A-001VA/VB - REUSED "AS IS" AFTER CONVERSION
METAL HEPA FILTER	FM-625B1	2.160 sm3/hr	316L SS		SIMILAR TO HWVP, FL-14A/B-001V - REUSED "AS IS" AFTER CONVERSION
METAL HEPA FILTER	FM-625B2	2.160 sm3/hr	304L SS		SIMILAR TO HWVP, FH-14A-002 - REUSED "AS IS" AFTER CONVERSION
PUMP	P-627	60 LPM, 60 kPa	316L SS		Re-used "As-Is" after conversion
MELTER OFFGAS HEAT EXCHANGER	EC-628	1.2 GJ/hr	304L SS		Re-used "As-Is" after conversion
Heater	E-629	334 kW	304L SS		Re-used "As-Is" after conversion
SO2 Absorber	R-630		304L SS		Re-used "As-Is" after conversion
Heater	E-631	190 kW	304L SS		Re-used "As-Is" after conversion
NOx Catalytic Reactor	R-632		321 SS		Re-used "As-Is" after conversion

Single Line TWRS Treatment Plant Equipment List

6/13/95

Equipment Description	Equipment Designation	Capacity	Material of Construction	Dimensions	Comment
SULFATE REDUCTION	R-633		304L SS		Re-used "As-Is" after conversion
NH3 Cracker	E-634	39 kW	304L SS		Re-used "As-Is" after conversion
SO2 ABS. REGEN.	R-635		304L SS		Re-used "As-Is" after conversion
COOLER	EC-636	595 MJ/hr	304L SS		Re-used "As-Is" after conversion
Claus Sulfur Plant	CL-650				Re-used "As-Is" after conversion if required (TBD)
PUMP	P-651	3.2 m3/hr. 105 kPa	316L SS		Re-used "As-Is" after conversion
HEATER	E-700A	3.5 kW	304L SS		Re-used "As-Is" after conversion
BLOWER	MB-700A	846 sm3/hr. 7.5 kW	304L SS		Re-used "As-Is" after conversion
METAL HEPA FILTER	FM-700A1	846 sm3/hr	316L SS		Re-used "As-Is" after conversion
METAL HEPA FILTER	FM-700A2	846 sm3/hr	304L SS		Re-used "As-Is" after conversion
HEATER	E-700B	3.5 kW	304L SS		Re-used "As-Is" after conversion

Single Line TWRS Treatment Plant Equipment List

6/13/95

Equipment Description	Equipment Designation	Capacity	Material of Construction	Dimensions	Comment
BLOWER	MB-700B	846 sm3/hr, 7.5 kW	304L SS		Re-used "As-Is" after conversion
METAL HEPA FILTER	FM-700B1	846 sm3/hr	316L SS		Re-used "As-Is" after conversion
METAL HEPA FILTER	FM-700B2	846 sm3/hr	304L SS		Re-used "As-Is" after conversion
HEATER	E-701A	24 kW	304L SS		Re-used "As-Is" after conversion
BLOWER	MB-701A	6,696 sm3/hr, 31.2 kW	304L SS		Re-used "As-Is" after conversion
Metal HEPA Filter	FM-701A1	6,696,160 sm3/hr	316L SS		Re-used "As-Is" after conversion
Metal HEPA Filter	FM-701A2	6,696,160 sm3/hr	304L SS		Re-used "As-Is" after conversion
Heater	E-701B	24 kW	304L SS		Re-used "As-Is" after conversion
Blower	MB-701B	6,696 sm3/hr, 31.2 kW	304L SS		Re-used "As-Is" after conversion
Metal HEPA Filter	FM-701B1	6,696 sm3/hr	316L SS		Re-used "As-Is" after conversion
Metal HEPA Filter	FM-701B2	6,696 sm3/hr	304L SS		Re-used "As-Is" after conversion

Single Line TWRS Treatment Plant Equipment List

6/13/95

Equipment Description	Equipment Designation	Capacity	Material of Construction	Dimensions	Comment
PROCESS CONDENSATE RECYCLE TANK	TK-800A	175 m3	316L SS		Re-used "As-Is" after conversion
PROCESS CONDENSATE RECYCLE TANK	TK-800B	175 m3	316L SS		Re-used "As-Is" after conversion
PROCESS CONDENSATE RECYCLE TANK	TK-800C	175 m3	316L SS		Re-used "As-Is" after conversion
PUMP	P-801A	16.6 m3/hr, 415 kPa	316L SS		Re-used "As-Is" after conversion
PUMP	P-801B	16.6 m3/hr, 415 kPa	316L SS		Re-used "As-Is" after conversion
PUMP	P-801C	16.6 m3/hr, 415 kPa	316L SS		Re-used "As-Is" after conversion
PUMP	P-802A	191 m3/hr, 275 kPa	316L SS		Re-used "As-Is" after conversion
PUMP	P-802B	191 m3/hr, 275 kPa	316L SS		Re-used "As-Is" after conversion
PUMP	P-802C	191 m3/hr, 275 kPa	316L SS		Re-used "As-Is" after conversion
COLD FEED VENT BLOWER	MB-1100A	510 sm3/hr, 6.2 kPa, 1.5 kW	304L SS		Re-used "As-Is" after conversion
COLD FEED VENT BLOWER	MB-1100B	510 sm3/hr, 6.2 kPa, 1.5 kW	304L SS		Re-used "As-Is" after conversion

Single Line TWRS Treatment Plant Equipment List

6/13/95

Equipment Description	Equipment Designation	Capacity	Material of Construction	Dimensions	Comment
MPC CONDENSER/COOLER	EC-1101	80 MJ/hr	304L SS		Re-used "As-Is" after conversion
PROCESS STEAM CONDENSATE CONDENSER/COOLER	EC-1102	12 GJ/hr	304L SS		Re-used "As-Is" after conversion
PROCESS COOLING WATER COOLER	EC-1103A	106 GJ/hr	304L SS PLATES		Re-used "As-Is" after conversion
PROCESS COOLING WATER COOLER	EC-1103B	106 GJ/hr	304L SS PLATES		Re-used "As-Is" after conversion
MELTER COOLING WATER COOLER	EC-1104A	2.5 GJ/hr	304L SS PLATES		Re-used "As-Is" after conversion
MELTER COOLING WATER COOLER	EC-1104B	2.5 GJ/hr	304L SS PLATES		Re-used "As-Is" after conversion
ORGANIC ACID DRAIN CATCH TANK HEGA FILTER	FG-1105	192 kg/hr	304L SS		Re-used "As-Is" after conversion
ORGANIC ACID VENT HEGA FILTER A	FG-1106A	213 kg/hr	304L SS		Re-used "As-Is" after conversion
ORGANIC ACID VENT HEGA FILTER B	FG-1106B	213 kg/hr	304L SS		Re-used "As-Is" after conversion
PROCESS CONDENSATE HEPA FILTER	FH-1107A	1.630 am3/hr	304L SS		Re-used "As-Is" after conversion
PROCESS CONDENSATE HEPA FILTER	FH-1107B	60 am3/hr	304L SS		Re-used "As-Is" after conversion

Single Line TWRS Treatment Plant Equipment List

6/13/95

Equipment Description	Equipment Designation	Capacity	Material of Construction	Dimensions	Comment
PROCESS COOLING WATER HEPA FILTER	FH-1108A	60 am3/hr	304L SS		Re-used "As-Is" after conversion
PROCESS COOLING WATER HEPA FILTER	FH-1108B	60 am3/hr	304L SS		Re-used "As-Is" after conversion
MELTER COOLING WATER HEPA FILTER	FH-1109A	60 am3/hr	304L SS		Re-used "As-Is" after conversion
MELTER COOLING WATER HEPA FILTER	FH-1109B	60 am3/hr	304L SS		Re-used "As-Is" after conversion
FLOOR DRAIN CATCH TANK HEPA FILTER	FH-1110	384 kg/hr	304L SS		Re-used "As-Is" after conversion
REGULATED DRAINS CATCH TANK HEPA FILTER	FH-1111	192 kg/hr	304L SS		Re-used "As-Is" after conversion
LIQUID WASTE COLLECTION HEPA FILTER	FH-1112	170 sm3/hr	304L SS		Re-used "As-Is" after conversion
ORGANIC ACID DRAIN CATCH TANK HEPA FILTER	FH-1113	192 kg/hr	316L SS		Re-used "As-Is" after conversion
FLOOR DRAIN HEPA FILTER	FH-1114A	170 sm3/hr	304L SS		Re-used "As-Is" after conversion
FLOOR DRAIN HEPA FILTER	FH-1114B	170 sm3/hr	304L SS		Re-used "As-Is" after conversion
FLOOR DRAIN HEPA FILTER	FH-1114C	170 sm3/hr	304L SS		Re-used "As-Is" after conversion

Single Line TWRS Treatment Plant Equipment List

6/13/95

Equipment Description	Equipment Designation	Capacity	Material of Construction	Dimensions	Comment
FLOOR DRAIN HEPA FILTER	FH-1114D	170 sm3/hr	304L SS		Re-used "As-Is" after conversion
LIQUID WASTE COLLECTION HEPA FILTER	FH-1115	170 sm3/hr	304L SS		Re-used "As-Is" after conversion
LIQUID WASTE COLLECTION HEPA FILTER	FH-1116	170 sm3/hr	304L SS		Re-used "As-Is" after conversion
COLD FEED VENT HEPA FILTER	FH-1117A	510 sm3/hr	304L SS		Re-used "As-Is" after conversion
COLD FEED VENT HEPA FILTER	FH-1117B	510 sm3/hr	304L SS		Re-used "As-Is" after conversion
VIT BLDG HPS VAC SYSTEM HEPA FILTER	FH-1118A	314 sm3/hr	304L SS		Re-used "As-Is" after conversion
VIT BLDG HPS VAC SYSTEM HEPA FILTER	FH-1118B	314 sm3/hr	304L SS		Re-used "As-Is" after conversion
VIT BLDG HPS VAC SYSTEM HEPA FILTER	FH-1118C	314 sm3/hr	304L SS		Re-used "As-Is" after conversion
VIT BLDG HPS VAC SYSTEM HEPA FILTER	FH-1118D	314 sm3/hr	304L SS		Re-used "As-Is" after conversion
VIT BLDG HPS VAC SYSTEM HEPA FILTER	FH-1118E	314 sm3/hr	304L SS		Re-used "As-Is" after conversion
VIT BLDG HPS VAC SYSTEM HEPA FILTER	FH-1118F	314 sm3/hr	304L SS		Re-used "As-Is" after conversion

Single Line TWRS Treatment Plant Equipment List

6/13/95

Equipment Description	Equipment Designation	Capacity	Material of Construction	Dimensions	Comment
VIT BLDG HPS VAC SYSTEM HEPA FILTER	FH-1118G	314 sm3/hr	304L SS		Re-used "As-Is" after conversion
VIT BLDG HPS VAC SYSTEM HEPA FILTER	FH-1118H	314 sm3/hr	304L SS		Re-used "As-Is" after conversion
OFF-GAS TREATMENT CHEMICAL FEED TANK ROUGHING FILTER	FL-1120	187 am3/hr	304L SS		Re-used "As-Is" after conversion
COLD CHEMICAL TANK ROUGHING FILTER	FL-1121	187 am3/hr	304L SS		Re-used "As-Is" after conversion
COLD CHEMICAL TANK ROUGHING FILTER	FL-1122	187 am3/hr	304L SS		Re-used "As-Is" after conversion
COLD CHEMICAL TANK ROUGHING FILTER	FL-1123	187 am3/hr	304L SS		Re-used "As-Is" after conversion
ELECTRIC PROCESS STEAM GENERATOR	EV-1124A	12.4 GJ/hr	CARBON STEEL		Re-used "As-Is" after conversion
ELECTRIC PROCESS STEAM GENERATOR	EV-1124B	12.4 GJ/hr	CARBON STEEL		Re-used "As-Is" after conversion
ELECTRIC PROCESS STEAM GENERATOR	EV-1124C	12.4 GJ/hr	CARBON STEEL		Re-used "As-Is" after conversion
ELECTRIC PROCESS STEAM GENERATOR	EV-1124D	12.4 GJ/hr	CARBON STEEL		Re-used "As-Is" after conversion
STANDBY ELECTRIC HEATER	E-1125A	24.0 KW	N/A		Re-used "As-Is" after conversion

Single Line TWRS Treatment Plant Equipment List

6/13/95

Equipment Description	Equipment Designation	Capacity	Material of Construction	Dimensions	Comment
STANDBY ELECTRIC HEATER	E-1125B	24.0 KW	N/A		Re-used "As-Is" after conversion
STANDBY ELECTRIC HEATER	E-1125C	24.0 KW	N/A		Re-used "As-Is" after conversion
STANDBY ELECTRIC HEATER	E-1125D	24.0 KW	N/A		Re-used "As-Is" after conversion
PROCESS STEAM GENERATOR CIRCULATING PUMP	P-1127A	408 m3/hr, 69 kPa	304L SS		Re-used "As-Is" after conversion
PROCESS STEAM GENERATOR CIRCULATING PUMP	P-1127B	408 m3/hr, 69 kPa	304L SS		Re-used "As-Is" after conversion
PROCESS STEAM GENERATOR CIRCULATING PUMP	P-1127C	408 m3/hr, 69 kPa	304L SS		Re-used "As-Is" after conversion
PROCESS STEAM GENERATOR CIRCULATING PUMP	P-1127D	408 m3/hr, 69 kPa	304L SS		Re-used "As-Is" after conversion
PROCESS STEAM GENERATOR CIRCULATING PUMP	P-1127E	408 m3/hr, 69 kPa	304L SS		Re-used "As-Is" after conversion
PROCESS STEAM GENERATOR CIRCULATING PUMP	P-1127F	408 m3/hr, 69 kPa	304L SS		Re-used "As-Is" after conversion
PROCESS STEAM GENERATOR CIRCULATING PUMP	P-1127G	408 m3/hr, 69 kPa	304L SS		Re-used "As-Is" after conversion
PROCESS STEAM GENERATOR CIRCULATING PUMP	P-1127H	408 m3/hr, 69 kPa	304L SS		Re-used "As-Is" after conversion

Single Line TWRS Treatment Plant Equipment List

6/13/95

Equipment Description	Equipment Designation	Capacity	Material of Construction	Dimensions	Comment
BOILER FEED WATER CHEMICAL INJECTION PUMP	P-1128A	3.8 LPM, 1,365 kPa	304L SS		Re-used "As-Is" after conversion
BOILER FEED WATER CHEMICAL INJECTION PUMP	P-1128B	3.8 LPM, 1,365 kPa	304L SS		Re-used "As-Is" after conversion
BOILER FEED WATER CHEMICAL INJECTION PUMP	P-1128C	3.8 LPM, 1,365 kPa	304L SS		Re-used "As-Is" after conversion
BOILER FEED WATER CHEMICAL INJECTION PUMP	P-1128D	3.8 LPM, 1,365 kPa	304L SS		Re-used "As-Is" after conversion
BLOWDOWN DRUM	TK-1129A	0.9 m3	304L SS		Re-used "As-Is" after conversion
BLOWDOWN DRUM	TK-1129B	0.9 m3	304L SS		Re-used "As-Is" after conversion
BLOWDOWN DRUM	TK-1129C	0.9 m3	304L SS		Re-used "As-Is" after conversion
BLOWDOWN DRUM	TK-1129D	0.9 m3	304L SS		Re-used "As-Is" after conversion
CHEMICAL ADDITION TANK	TK-1130A	0.6 m3	304L SS		Re-used "As-Is" after conversion
CHEMICAL ADDITION TANK	TK-1130B	0.6 m3	304L SS		Re-used "As-Is" after conversion
CHEMICAL ADDITION TANK	TK-1130C	0.6 m3	304L SS		Re-used "As-Is" after conversion

Single Line TWRS Treatment Plant Equipment List

6/13/95

Equipment Description	Equipment Designation	Capacity	Material of Construction	Dimensions	Comment
CHEMICAL ADDITION TANK	TK-1130D	0.6 m3	304L SS		Re-used "As-Is" after conversion
MPC COLLECTION TANK PUMP	P-1136	4.2 m3/hr, 69 kPa	304L SS		Re-used "As-Is" after conversion
PROCESS CONDENSATE PUMP	P-1137A	24.6 m3/hr, 1,390 kPa	304L SS		Re-used "As-Is" after conversion
PROCESS CONDENSATE PUMP	P-1137B	24.6 m3/hr, 1,390 kPa	304L SS		Re-used "As-Is" after conversion
PROCESS COOLING WATER PUMP	P-1138A	2,427 m3/hr, 490 kPa	304L SS		Re-used "As-Is" after conversion
PROCESS COOLING WATER PUMP	P-1138B	2,427 m3/hr, 490 kPa	304L SS		Re-used "As-Is" after conversion
MELTER COOLING WATER PUMP	P-1139A	545 m3/hr, 327 kPa	304L SS		Re-used "As-Is" after conversion
MELTER COOLING WATER PUMP	P-1139B	545 m3/hr, 327 kPa	304L SS		Re-used "As-Is" after conversion
FLOOR DRAIN CATCH TANK TRANSFER PUMP	P-1140	34 m3/hr, 428 kPa	304L SS		Re-used "As-Is" after conversion
FLOOR DRAIN CATCH TANK SUMP PUMP	P-1141	4.6 m3/hr, 340 kPa	304L SS		Re-used "As-Is" after conversion
REGULATED DRAINS CATCH TANK TRANSFER PUMP	P-1142	32 m3/hr, 415 kPa	304L SS		Re-used "As-Is" after conversion

Single Line TWRS Treatment Plant Equipment List

6/13/95

Equipment Description	Equipment Designation	Capacity	Material of Construction	Dimensions	Comment
ACID DRAIN CATCH TANK TRANSFER PUMP	P-1143	14 m3/hr, 345 kPa	304L SS		Re-used "As-Is" after conversion
ACID DRAIN CATCH TANK SUMP PUMP	P-1144	4.6 m3/hr, 340 kPa	304L SS		Re-used "As-Is" after conversion
ORGANIC ACID DRAIN CATCH TANK TRANSFER PUMP	P-1145	14 m3/hr, 360 kPa	304L SS		Re-used "As-Is" after conversion
ORGANIC ACID DRAIN CATCH TANK SUMP PUMP	P-1146	4.6 m3/hr, 340 kPa	304L SS		Re-used "As-Is" after conversion
REGULATED DRAINS CATCH TANK SUMP PUMP	P-1147	4.6 m3/hr, 340 kPa	304L SS		Re-used "As-Is" after conversion
FLOOR DRAIN SAMPLING TANK TRANSFER PUMP	P-1148	34 m3/hr, 428 kPa	304L SS		Re-used "As-Is" after conversion
40% NaNO2 FEED PUMP	P-1160	1 m3/hr, 265 kPa	316L SS		Re-used "As-Is" after conversion
COLD CHEMICAL FEED PUMP	P-1170	3.2 m3/hr, 250 kPa	316L SS		Re-used "As-Is" after conversion
COLD CHEMICAL FEED PUMP	P-1171	3.2 m3/hr, 250 kPa	304L SS		Re-used "As-Is" after conversion
COLD CHEMICAL FEED PUMP	P-1172	3.2 m3/hr, 250 kPa	316L SS		Re-used "As-Is" after conversion
OFFGAS TREATMENT CHEMICAL FEED PUMP	P-1173	3.2 m3/hr, 250 kPa	316L SS		Re-used "As-Is" after conversion

Single Line TWRS Treatment Plant Equipment List

6/13/95

Equipment Description	Equipment Designation	Capacity	Material of Construction	Dimensions	Comment
50% NITRIC ACID FEED PUMP	P-1175	8.6 m3/hr, 105 kPa	304L SS/316L SS		Re-used "As-Is" after conversion
NITRIC ACID DECON FEED PUMP	P-1176	19 m3/hr, 1,565 kPa	304L SS/316L SS		Re-used "As-Is" after conversion
OXALIC ACID DECON FEED PUMP	P-1177	19 m3/hr, 1,565 kPa	316L SS		Re-used "As-Is" after conversion
POTASSIUM PERMANGANATE FEED PUMP	P-1178	3.2 m3/hr, 90 kPa	304L SS		Re-used "As-Is" after conversion
50% CAUSTIC FEED PUMP	P-1180	8.6 m3/hr, 283 kPa	316L SS		Re-used "As-Is" after conversion
PROCESS WATER BOOSTER PUMP	P-1181	10 m3/hr, 300 kPa	304L SS		Re-used "As-Is" after conversion
ANTIFOAM FEED PUMP	P-1182A	3.8 LPM, 350 kPa	304L SS		Re-used "As-Is" after conversion
ANTIFOAM FEED PUMP	P-1182B	3.8 LPM, 350 kPa	304L SS		Re-used "As-Is" after conversion
ANTIFOAM FEED PUMP	P-1182C	3.8 LPM, 350 kPa	304L SS		Re-used "As-Is" after conversion
ANTIFOAM FEED PUMP	P-1182D	3.8 LPM, 350 kPa	304L SS		Re-used "As-Is" after conversion
ANTIFOAM FEED PUMP	P-1182E	3.8 LPM, 350 kPa	304L SS		Re-used "As-Is" after conversion

Single Line TWRS Treatment Plant Equipment List

6/13/95

Equipment Description	Equipment Designation	Capacity	Material of Construction	Dimensions	Comment
ACID DRAIN CATCH TANK SUMP	SU-1183	2 m3	CONCRETE W/7 MIL EPOXY COATING		Re-used "As-Is" after conversion
ORGANIC ACID DRAIN CATCH TANK SUMP	SU-1184	2 m3	CONCRETE W/7 MIL EPOXY COATING		Re-used "As-Is" after conversion
FLOOR DRAIN CATCH TANK SUMP	SU-1185	2 m3	CONCRETE W/7 MIL EPOXY COATING		Re-used "As-Is" after conversion
REGULATED DRAINS CATCH TANK SUMP	SU-1186	2 m3	CONCRETE W/7 MIL EPOXY COATING		Re-used "As-Is" after conversion
MPC FLASH DRUM	TK-1189	114 LITERS	GALVANIZED STEEL		Re-used "As-Is" after conversion
MPC COLLECTION TANK	TK-1190	2.7 m3	GALVANIZED STEEL		Re-used "As-Is" after conversion
PROCESS CONDENSATE COLLECTION TANK	TK-1191	15.9 m3	304L SS		Re-used "As-Is" after conversion
PROCESS COOLING WATER EXPANSION TANK	TK-1192	4.8 m3	304L SS		Re-used "As-Is" after conversion
MELTER COOLING WATER EXPANSION TANK	TK-1193	9 m3	304L SS		Re-used "As-Is" after conversion
LOW PRESSURE PROCESS WATER TANK	TK-1194	4.8 m3	304L SS		Re-used "As-Is" after conversion
FLOOR DRAIN CATCH TANK	TK-1195	19.7 m3	304L SS		Re-used "As-Is" after conversion

Single Line TWRS Treatment Plant Equipment List

6/13/95

Equipment Description	Equipment Designation	Capacity	Material of Construction	Dimensions	Comment
REGULATED DRAINS CATCH TANK	TK-1196	9.8 m3	304L SS		Re-used "As-Is" after conversion
ACID DRAIN CATCH TANK	TK-1197	8 m3	304L SS		Re-used "As-Is" after conversion
ORGANIC ACID DRAIN CATCH TANK	TK-1198	8 m3	304L SS		Re-used "As-Is" after conversion
FLOOR DRAIN SAMPLING TANK	TK-1199	19.7 m3	304L SS		Re-used "As-Is" after conversion
40% NaNO2 FEED TANK	TK-1201	4 m3	316L SS		Re-used "As-Is" after conversion
COLD CHEMICAL FEED TANK	TK-1200	4 m3	304L SS		Re-used "As-Is" after conversion
COLD CHEMICAL FEED TANK	TK-1202	4 m3	316L SS		Re-used "As-Is" after conversion
COLD CHEMICAL FEED TANK	TK-1203	4 m3	304L SS		Re-used "As-Is" after conversion
50% NITRIC ACID FEED TANK	TK-1205	4 m3	304L SS		Re-used "As-Is" after conversion
NITRIC ACID DECON FEED TANK	TK-1206	4 m3	304L SS		Re-used "As-Is" after conversion
OXALIC ACID DECON FEED TANK	TK-1207	4 m3	316L SS		Re-used "As-Is" after conversion

Single Line TWRS Treatment Plant Equipment List

Equipment Description	Equipment Designation	Capacity	Material of Construction	Dimensions	Comment
POTASSIUM PERMANGANATE FEED TANK	TK-1208	4 m3	304L SS		Re-used "As-Is" after conversion
50% CAUSTIC FEED TANK	TK-1209	4 m3	316L SS		Re-used "As-Is" after conversion
FLUSH WATER FEED TANK	TK-1210	4 m3	304L SS		Re-used "As-Is" after conversion
OFF-GAS TREATMENT CHEMICAL FEED TANK	TK-1211	4 m3	304L SS		Re-used "As-Is" after conversion
VIT BLDG HPS VACUUM BLOWER	MB-1213A	2,520 sm3/hr, 67.7 kPa VACCUUM, 298 kW	CARBON STEEL		Re-used "As-Is" after conversion
VIT BLDG HPS VACUUM BLOWER	MB-1213B	2,520 sm3/hr, 67.7 kPa VACCUUM, 298 kW	CARBON STEEL		Re-used "As-Is" after conversion
COLD CHEMICAL TANK ROUGHING FILTER	FL-1214	187 am3/hr	304L SS		Re-used "As-Is" after conversion
PROCESS WATER CHILLER	EC-1215	101 MJ/hr			Re-used "As-Is" after conversion
CULLET PNEU. TRANSFER SYSTEM	XE-2001	5.8 mt/hr	304L SS		Removed from service following conversion
CULLET PNEU. TRANSFER SYSTEM	X-2003	11.4 mt/hr	304L SS		Removed from service following conversion
STORAGE VAULT	TK-2601	5,300 m3	CONCRETE		Removed from service following conversion

Single Line TWRS Treatment Plant Equipment List

6/13/95

Equipment Description	Equipment Designation	Capacity	Material of Construction	Dimensions	Comment
STORAGE VAULT	TK-2602	5,300 m3	CONCRETE		Removed from service following conversion
STORAGE VAULT	TK-2603	5,300 m3	CONCRETE		Removed from service following conversion
STORAGE VAULT	TK-2604	5,300 m3	CONCRETE		Removed from service following conversion
STORAGE VAULT	TK-2605	5,300 m3	CONCRETE		Removed from service following conversion
STORAGE VAULT	TK-2606	5,300 m3	CONCRETE		Removed from service following conversion
STORAGE VAULT	TK-2607	5,300 m3	CONCRETE		Removed from service following conversion
STORAGE VAULT	TK-2608	5,300 m3	CONCRETE		Removed from service following conversion
STORAGE VAULT	TK-2609	5,300 m3	CONCRETE		Removed from service following conversion
STORAGE VAULT	TK-2610	5,300 m3	CONCRETE		Removed from service following conversion
STORAGE VAULT	TK-2611	5,300 m3	CONCRETE		Removed from service following conversion
STORAGE VAULT	TK-2612	5,300 m3	CONCRETE		Removed from service following conversion

Single Line TWRS Treatment Plant Equipment List

6/13/95

Equipment Description	Equipment Designation	Capacity	Material of Construction	Dimensions	Comment
STORAGE VAULT	TK-2613	5,300 m3	CONCRETE		Removed from service following conversion
STORAGE VAULT	TK-2614	5,300 m3	CONCRETE		Removed from service following conversion
STORAGE VAULT	TK-2615	5,300 m3	CONCRETE		Removed from service following conversion
STORAGE VAULT	TK-2616	5,300 m3	CONCRETE		Removed from service following conversion
STORAGE VAULT	TK-2617	5,300 m3	CONCRETE		Removed from service following conversion
STORAGE VAULT	TK-2618	5,300 m3	CONCRETE		Removed from service following conversion
STORAGE VAULT	TK-2619	5,300 m3	CONCRETE		Removed from service following conversion
STORAGE VAULT	TK-2620	5,300 m3	CONCRETE		Removed from service following conversion
STORAGE VAULT	TK-2621	5,300 m3	CONCRETE		Removed from service following conversion
STORAGE VAULT	TK-2622	5,300 m3	CONCRETE		Removed from service following conversion
STORAGE VAULT	TK-2623	5,300 m3	CONCRETE		Removed from service following conversion

Single Line TWRS Treatment Plant Equipment List

6/13/95

Equipment Description	Equipment Designation	Capacity	Material of Construction	Dimensions	Comment
STORAGE VAULT	TK-2624	5,300 m3	CONCRETE		Removed from service following conversion
STORAGE VAULT	TK-2625	5,300 m3	CONCRETE		Removed from service following conversion
STORAGE VAULT	TK-2626	5,300 m3	CONCRETE		Removed from service following conversion
STORAGE VAULT	TK-2627	5,300 m3	CONCRETE		Removed from service following conversion
STORAGE VAULT	TK-2628	5,300 m3	CONCRETE		Removed from service following conversion
STORAGE VAULT	TK-2629	5,300 m3	CONCRETE		Removed from service following conversion
STORAGE VAULT	TK-2630	5,300 m3	CONCRETE		Removed from service following conversion
STORAGE VAULT	TK-2631	5,300 m3	CONCRETE		Removed from service following conversion
STORAGE VAULT	TK-2632	5,300 m3	CONCRETE		Removed from service following conversion
STORAGE VAULT	TK-2633	5,300 m3	CONCRETE		Removed from service following conversion
STORAGE VAULT	TK-2634	5,300 m3	CONCRETE		Removed from service following conversion

Single Line TWRS Treatment Plant Equipment List

6/13/95

Equipment Description	Equipment Designation	Capacity	Material of Construction	Dimensions	Comment
STORAGE VAULT	TK-2635	5,300 m3	CONCRETE		Removed from service following conversion
STORAGE VAULT	TK-2636	5,300 m3	CONCRETE		Removed from service following conversion
STORAGE VAULT	TK-2637	5,300 m3	CONCRETE		Removed from service following conversion
STORAGE VAULT	TK-2638	5,300 m3	CONCRETE		Removed from service following conversion
STORAGE VAULT	TK-2639	5,300 m3	CONCRETE		Removed from service following conversion
STORAGE VAULT	TK-2640	5,300 m3	CONCRETE		Removed from service following conversion
STORAGE VAULT	TK-2641	5,300 m3	CONCRETE		Removed from service following conversion
STORAGE VAULT	TK-2642	5,300 m3	CONCRETE		Removed from service following conversion
LLW CULLET STORAGE	TK-2002A1	240 MT	304L SS		Removed from service following conversion
Condenser	EC-140	21.1 GJ/hr	Hastelloy-C		Reused "AS IS" following conversion.
Condenser	EC-223	21.1 GJ/hr	Hastelloy-C		Removed from service following conversion

Single Line TWRS Treatment Plant Equipment List

6/13/95

Equipment Description	Equipment Designation	Capacity	Material of Construction	Dimensions	Comment
Supernatant Evaporator	EV-139	24.8 GJ/hr	Hastelloy-C		Reused "AS IS" following conversion.
Cs IX Concentrator	EV-224	23.2 GJ/hr	316 SS		Removed from service following conversion
Frit Filter	F-202	2.4 m3	316 SS		Removed from service following conversion
Cartridge Filter	FT-1550	57 lpm @12 kg/cm2	316 SS		Removed from service following conversion
Cesium Ion Exchange Column	IX-216A	4000 l resin vol each	316 SS		Removed from service following conversion
Hot Air Blower	MB-1558	2,840 lpm	316 SS		Removed from service following conversion
Receipt/Sample Tank Pump	P-132A	379 lpm @3.52 kg/cm2	316 SS		Reused "AS IS" following conversion.
Evaporator Feed Tank Pump	P-137	190 lpm @3.52 kg/cm2	316 SS		Reused "AS IS" following conversion
Cs Ion Exchange Feed Adjust Tank Pump	P-138	379 lpm @3.52 kg/cm2	316 SS		Removed from service following conversion
Concentrated Supernatant Catch Tank Pump	P-142	379 lpm @3.52 kg/cm2	316 SS		Reused "AS IS" following conversion
Concentrated Supernatant Sample Tank Pump	P-145A	379 lpm @3.52 kg/cm2	316 SS		Removed from service following conversion

Single Line TWRS Treatment Plant Equipment List

Equipment Description	Equipment Designation	Capacity	Material of Construction	Dimensions	Comment
Transfer Tank Pump	P-147	379 lpm @3.52 kg/cm2	316 SS		Removed from service following conversion
Cs IX Feed Tank Pump	P-201	120 lpm @3.52 kg/cm2	316 SS		Removed from service following conversion
Filter Bed Catch Tank Pump	P-204	76 lpm @3.52 kg/cm2	316 SS		Removed from service following conversion
Cs IX Acid Regen Feed Tank Pump	P-207	90 lpm @3.52 kg/cm2	316 SS		Removed from service following conversion
Acid Recycle Tank Pump	P-209	379 lpm @3.52 kg/cm2	316 SS		Removed from service following conversion
Cs IX Caustic Regen Feed Tank Pump	P-215	190 lpm @3.52 kg/cm2	316 SS		Removed from service following conversion
Cs IX Eluant Catch Tank Pump	P-218	90 lpm @3.52 kg/cm2	316 SS		Removed from service following conversion
Cesium IX Waste Tank Pump	P-220	230 lpm @3.52 kg/cm2	316 SS		Removed from service following conversion
Cs IX Concentrator Catch/Adjustment Tank Pump	P-226	379 lpm @3.52 kg/cm2	316 SS		Removed from service following conversion
Resin Fluidizing Pump	P-1551A	57 lpm @12 kg/cm2	316 SS		Removed from service following conversion
Spent Resin Pump	P-1557A	100 lpm @5 kg/cm2	316 SS		Removed from service following conversion

Single Line TWRS Treatment Plant Equipment List

6/13/95

Equipment Description	Equipment Designation	Capacity	Material of Construction	Dimensions	Comment
Demin Water Tank Pump	P-1574	19 lpm @ 3.52kg/cm2	C.S.		Removed from service following conversion
Receipt/Sample Tank	TK-131A	540 m3	316 SS		Reused "AS IS" following conversion.
Evaporator Feed Tank	TK-135	133 m3	316 SS		Reused "AS IS" following conversion
Cs Ion Exchange Feed Adjust Tank	TK-136	53 m3	316 SS		Removed from service following conversion
Concentrated Supernatant Catch Tank	TK-141	53 m3	316 SS		Reused "AS IS" following conversion
Concentrated Supernatant Sample Tank	TK-143	53 m3	316 SS		Removed from service following conversion
Transfer Tank	TK-146	53 m3	316 SS		Removed from service following conversion
Cs IX Feed Tank	TK-200	53 m3	316 SS		Removed from service following conversion
Filter Bed Catch Tank	TK-203	8 m3	316 SS		Removed from service following conversion
Cesium IX Resin Tank	TK-205	20 m3	316 SS		Removed from service following conversion
Cs IX Acid Elution Feed Tank	TK-206	46 m3	316 SS		Removed from service following conversion

Single Line TWRS Treatment Plant Equipment List

6/13/95

Equipment Description	Equipment Designation	Capacity	Material of Construction	Dimensions	Comment
Startup Nitric Acid Tank (4.2 M)	TK-208	1 m3	316 SS		Removed from service following conversion
Acid Recycle Tank	TK-210	46 m3	316 SS		Removed from service following conversion
NaOH Regen Tank (2.0 M)	TK-211	12 m3	316 SS		Removed from service following conversion
NaOH Regen Tank (.5 M)	TK-212	12 m3	316 SS		Removed from service following conversion
NaOH Neutralizing Solution Make-up Tank	TK-213	1 m3	316 SS		Removed from service following conversion
Cs IX Caustic Regen Feed Tank	TK-214	12 m3	316 SS		Removed from service following conversion
Cs IX Eluant Catch Tank	TK-217	60 m3	316 SS		Removed from service following conversion
Cs IX Waste Tank	TK-219	24 m3	316 SS		Removed from service following conversion
Cs IX Concentrator Catch/Adjustment Tank	TK-225	20 m3	316 SS		Removed from service following conversion
Resin Mixing Tank	TK-1552	2.3 m3	316 SS		Removed from service following conversion
Spent Resin Receiver	TK-1556A	10,000 l	316 SS		Removed from service following conversion

Single Line TWRS Treatment Plant Equipment List

Equipment Description	Equipment Designation	Capacity	Material of Construction	Dimensions	Comment
Water Knockout Drum	TK-1559	4 m3	316 SS		Removed from service following conversion
Demin Water Tank	TK-1573	20 m3	C.S.		Removed from service following conversion
Receipt/Sample Tank	TK-131B	540 m3	316 SS		Reused "AS IS" following conversion.
Receipt/Sample Tank	TK-131C	540 m3	316 SS		Reused "AS IS" following conversion.
Receipt/Sample Tank Pump	P-132B	379 lpm @3.52 kg/cm2	316 SS		Reused "AS IS" following conversion.
Receipt/Sample Tank Pump	P-132C	379 lpm @3.52 kg/cm2	316 SS		Reused "AS IS" following conversion.
Concentrated Supernatant Sample Tank Pump	P-145B	379 lpm @3.52 kg/cm2	316 SS		Removed from service following conversion
Cesium Ion Exchange Column	IX-216B	4000 l resin vol each	316 SS		Removed from service following conversion
Cesium Ion Exchange Column	IX-216C	4000 l resin vol each	316 SS		Removed from service following conversion
Cesium Ion Exchange Column	IX-216D	4000 l resin vol each	316 SS		Removed from service following conversion
Resin Fluidizing Pump	P-1551B	57 lpm @12 kg/cm2	316 SS		Removed from service following conversion

Single Line TWRS Treatment Plant Equipment List

6/13/95

Equipment Description	Equipment Designation	Capacity	Material of Construction	Dimensions	Comment
Spent Resin Receiver	TK-1556B	10,000 l	316 SS		Removed from service following conversion
Spent Resin Pump	P-1557B	100 lpm @5 kg/cm2	316 SS		Removed from service following conversion
ELECTRIC PROCESS STEAM GENERATOR	EV-1124E	12.4 GJ/hr			Removed from service after conversion
STANDBY ELECTRIC HEATER	E-1125E	24.0 KW	N/A		Removed from service after conversion
PROCESS STEAM GENERATOR CIRCULATING PUMP	P-1127K	408 m3/hr, 69 kPa	304L SS		Removed from service after conversion
PROCESS STEAM GENERATOR CIRCULATING PUMP	P-1127J	408 m3/hr, 69 kPa	304L SS		Removed from service after conversion
BOILER FEED WATER CHEMICAL INJECTION PUMP	P-1128E	3.8 LPM, 1,365 kPa	304L SS		Removed from service after conversion
BLOWDOWN DRUM	TK-1129E	0.9 m3	304L SS		Removed from service after conversion
CHEMICAL ADDITION TANK	TK-1130E	0.6 m3	304L SS		Removed from service after conversion
H2O PUMPOUT PUMP	P-1560	95 lpm @3.52 kg/cm2	316 SS		Removed from service following conversion
CONCENTRATED CsIX HLW NaNO2 MAKEUP TANK	TK-227	1 m3	316 SS		Removed from service following conversion

Single Line TWRS Treatment Plant Equipment List

6/13/95

Equipment Description	Equipment Designation	Capacity	Material of Construction	Dimensions	Comment
LLW MELTER FILTER WASH CATCH TANK	TK-626	8 m3	316L SS		Re-used "As-Is" after conversion
CVOG/VOG FILTER WASH CATCH TANK	TK-702	8 m3	316L SS		Re-used "As-Is" after conversion
PUMP	P-703	17 m3/hr, 69 kPa	316L SS		Re-used "As-Is" after conversion
VIT BLDG HPS VAC SYSTEM HEPA FILTER	FH-1118J	314 sm3/hr	304L SS		Re-used "As-Is" after conversion
VIT BLDG HPS VAC SYSTEM HEPA FILTER	FH-1118K	314 sm3/hr	304L SS		Re-used "As-Is" after conversion
VIT BLDG HPS VAC SYSTEM HEPA FILTER	FH-1118L	314 sm3/hr	304L SS		Re-used "As-Is" after conversion
VIT BLDG HPS VAC SYSTEM HEPA FILTER	FH-1118M	314 sm3/hr	304L SS		Re-used "As-Is" after conversion
VIT BLDG HPS VAC SYSTEM HEPA FILTER	FH-1118N	314 sm3/hr	304L SS		Re-used "As-Is" after conversion
VIT BLDG HPS VAC SYSTEM HEPA FILTER	FH-1118P	314 sm3/hr	304L SS		Re-used "As-Is" after conversion
VIT BLDG HPS VAC SYSTEM HEPA FILTER	FH-1118Q	314 sm3/hr	304L SS		Re-used "As-Is" after conversion
VIT BLDG HPS VAC SYSTEM HEPA FILTER	FH-1118R	314 sm3/hr	304L SS		Re-used "As-Is" after conversion

Single Line TWRS Treatment Plant Equipment List

6/13/95

Equipment Description	Equipment Designation	Capacity	Material of Construction	Dimensions	Comment
KEROSENE FEED TANK	TK-1216	11.8 m3	CARBON STEEL		Removed from service following conversion
KEROSENE FEED PUMP	P-1217	3.2 gpm, 690 kPa	CARBON STEEL		Removed from service following conversion
SCRUB FILTER	F-621	5.2 m3/hr	HASTELLOY C-22		REUSED "AS IS" AFTER CONVERSION (FOR CHLORIDE PURGE OPERATION).
ANTIFOAM FEED TANK	TK-1182	4 m3	304L SS		Re-used "As-Is" after conversion
HLW Melter	EM-323	20 mt/d	REFRACTORY LINED		Joule-Heated Melter added during converson
LLW CULLET STORAGE	TK-2002A2	240 MT	304L SS		Removed from service following conversion
MERC	MR-2697	STANDARD	304L SS		Separations Cell. Reused "AS IS" following conversion
MERC	MR-2698	STANDARD	304L SS		Separations Cell. Reused "AS IS" following conversion
MERC	MR-2699	STANDARD	304L SS		Separations Cell. Reused "AS IS" following conversion
MERC	MR-2700	STANDARD	304L SS		Separations Cell. Reused "AS IS" following conversion
ZONE 1 EXHAUST STACK FLUSH SYSTEM BOOSTER PUMP	P-1592	17 m3/hr, 366 kPa	CAST IRON		Reused "AS IS" following conversion

Single Line TWRS Treatment Plant Equipment List

6/13/95

Equipment Description	Equipment Designation	Capacity	Material of Construction	Dimensions	Comment
FAN/FILTER ANNEX HPS VAC SYS HEPA FILTER	FH-1789A	148 sm3/hr	304L SS		Reused "AS IS" following conversion
FAN/FILTER ANNEX HPS VAC SYS HEPA FILTER	FH-1789B	148 sm3/hr	304L SS		Reused "AS IS" following conversion
FAN/FILTER ANNEX HPS VAC SYS BLOWER	MB-1790A	148 sm3/hr	CARBON STEEL		Reused "AS IS" following conversion
FAN/FILTER ANNEX HPS VAC SYS BLOWER	MB-1790B	148 sm3/hr	CARBON STEEL		Reused "AS IS" following conversion
DIESEL FUEL TANK	TK-2914A	26.5 m3	CARBON STEEL		Reused "AS IS" following conversion
DAY DIESEL FUEL TANK	TK-2915A	2.3 m3	CARBON STEEL		Reused "AS IS" following conversion
EMERGENCY GENERATOR	DG-2916A	1 MW			Reused "AS IS" following conversion
TRANSFER CART	CC-2920	90 mt			6 EACH. Removed from service following conversion
FILL SYSTEM	HD-2921				2 EACH. Removed from service following conversion
LID BOLTING STATIONS	HD-2922				2 EACH. Removed from service following conversion
CCTV CAMERAS	TV-2923				20 EACH. Removed from service following conversion

Single Line TWRS Treatment Plant Equipment List

6/13/95

Equipment Description	Equipment Designation	Capacity	Material of Construction	Dimensions	Comment
ELEVATOR	CN-2924	9 mt			Removed from service following conversion
AIRLOCK	SD-2925				Removed from service following conversion
CASK/CANISTER HANDLING ANNEX HPS VAC SYSTEM HEPA FILTER	FH-1782A	85 sm3/hr	304L SS		Reused "AS IS" following conversion
CASK/CANISTER HANDLING ANNEX HPS VAC SYSTEM HEPA FILTER	FH-1782B	85 sm3/hr	304L SS		Reused "AS IS" following conversion
CASK/CANISTER HANDLING ANNEX HPS VAC BLOWER	FH-1785A	85 sm3/hr	CARBON STEEL		Reused "AS IS" following conversion
CASK/CANISTER HANDLING ANNEX HPS VAC BLOWER	FH-1785B	85 sm3/hr	CARBON STEEL		Reused "AS IS" following conversion
PLUG INSERTION/REMOVAL DEVICE W/CONTROL PANEL (#1)	HD-2201				New equipment installed during conversion
CFC CCTV W/VIEWING STATION	TV-2208				New equipment installed during conversion
CFC CELL LIGHT ASSEMBLIES (8)	LT-2211				New equipment installed during conversion
CWC JIB CRANE W/CONTROL PANEL (#1)	CN-2213				New equipment installed during conversion
WELD EQUIPMENT TABLE	WB-2214				New equipment installed during conversion

Single Line TWRS Treatment Plant Equipment List

6/13/95

Equipment Description	Equipment Designation	Capacity	Material of Construction	Dimensions	Comment
INSPECTION EQUIPMENT TABLE	WB-2215				New equipment installed during conversion
CANISTER WELDER #1 W/POWER PACK	WE-2217				New equipment installed during conversion
CANISTER WELDER #2 W/POWER PACK (SPARE)	WE-2218				New equipment installed during conversion
CWC MSM #1	MS-2219				MODEL F. New equipment installed during conversion
CWC MSM #2	MS-2220				MODEL F. New equipment installed during conversion
CWC WINDOW #1	SZ-2223				New equipment installed during conversion
CWC CCTV & VIEWING STATION	TV-2225				New equipment installed during conversion
CWC CELL LIGHT ASSEMBLIES (8)	LT-2226				New equipment installed during conversion
WELD INSPECTION EQUIPMENT (#1)	MY-2227				New equipment installed during conversion
CDC SHIELD WINDOW (8)	SZ-2229A-H				New equipment installed during conversion
CCTV CAMERA #1 W/VIEWING STATION	TV-2231				New equipment installed during conversion

Single Line TWRS Treatment Plant Equipment List

6/13/95

Equipment Description	Equipment Designation	Capacity	Material of Construction	Dimensions	Comment
CCTV CAMERA #2 W/VIEWING STATION	TV-2232				New equipment installed during conversion
CDC CELL LIGHT ASSEMBLIES (8)	LT-2245				New equipment installed during conversion
STC CCTV #1 W/VIEWING STATION	TV-2246				New equipment installed during conversion
STC CCTV #2 W/VIEWING STATION	TV-2247				New equipment installed during conversion
CCTV LIFT TABLE (#1)	HD-2248				New equipment installed during conversion
CANISTER TURNTABLE W/CONTROL PANEL (#1)	TU-2250				New equipment installed during conversion
PNEUMATIC TRANSFER SYSTEM (PTS) #1	XE-2257				New equipment installed during conversion
PNEUMATIC TRANSFER SYSTEM (PTS) #2	XE-2258				New equipment installed during conversion
PNEUMATIC TRANSFER SYSTEM (PTS) #3	XE-2259				New equipment installed during conversion
PNEUMATIC TRANSFER SYSTEM (PTS) #4	XE-2260				New equipment installed during conversion
RADIATION COUNTER #1	RE-2261				New equipment installed during conversion

Single Line TWRS Treatment Plant Equipment List

6/13/95

Equipment Description	Equipment Designation	Capacity	Material of Construction	Dimensions	Comment
RADIATION COUNTER #2	RE-2262				New equipment installed during conversion
RADIATION COUNTER #3	RE-2263				New equipment installed during conversion
RADIATION COUNTER #4	RE-2264				New equipment installed during conversion
STC SHIELD WINDOW #1	SZ-2265				New equipment installed during conversion
GAMMA DETECTOR	RE-2268				New equipment installed during conversion
NEUTRON DETECTOR	RE-2269				New equipment installed during conversion
TEMPERATURE PROBE & CONTROL PANEL	TE-2270				New equipment installed during conversion
STC LIGHT ASSEMBLIES (8)	LT-2271				New equipment installed during conversion
STC PERSONNEL ACCESS/SHIELD DOOR	SD-2273				New equipment installed during conversion
OVERPACK STAGING BUILDING CRANE	CN-2285				New equipment installed during conversion
OVERPACK DECON STAND	SR-2286				New equipment installed during conversion

Single Line TWRS Treatment Plant Equipment List

6/13/95

Equipment Description	Equipment Designation	Capacity	Material of Construction	Dimensions	Comment
RADIATION COUNTER #1	RE-2287				New equipment installed during conversion
RADIATION COUNTER #2	RE-2288				New equipment installed during conversion
RADIATION COUNTER #3	RE-2289				New equipment installed during conversion
RADIATION COUNTER #4	RE-2290				New equipment installed during conversion
OVERPACK WELDING EQUIPMENT	WE-2291				New equipment installed during conversion
TRANSFER CART RAIL SYSTEM W/CONTROLS	CC-2292				New equipment installed during conversion
CANISTER TRANSFER CART #1	CC-2293				New equipment installed during conversion
CANISTER TRANSFER CART #2	CC-2294				New equipment installed during conversion
CANISTER TRANSFER CART #3	CC-2295				New equipment installed during conversion
CANISTER TRANSFER CART #4	CC-2296				New equipment installed during conversion
CANISTER TRANSFER CART #5	CC-2297				New equipment installed during conversion

Single Line TWRS Treatment Plant Equipment List

6/13/95

Equipment Description	Equipment Designation	Capacity	Material of Construction	Dimensions	Comment
CANISTER TRANSFER CART #6	CC-2298				New equipment installed during conversion
CANISTER TRANSFER CART #7	CC-2299				New equipment installed during conversion
CANISTER TRANSFER CART #8	CC-2300				New equipment installed during conversion
CANISTER HANDLING FORK LIFT	CC-2301				New equipment installed during conversion
CANISTER ENTRY CRANE	CN-2304				New equipment installed during conversion
ENTRY TUNNEL MOTORIZED HATCH (SHIELDED)	RA-2320				New equipment installed during conversion
TUNNEL LIGHT ASSEMBLIES (8)	LT-2321				New equipment installed during conversion
CCC CCTV W/ VIEWING STATION	TV-2322				New equipment installed during conversion
PLUG INSERTION/REMOVAL DEVICE W/CONTROL PANEL (#2)	HD-2323				New equipment installed during conversion
CFC MOTORIZED HATCH (NON-SHIELDED)	RA-2324				New equipment installed during conversion
36-POSITION WATER-COOLED CANISTER STORAGE RACK	SR-2325				New equipment installed during conversion

Single Line TWRS Treatment Plant Equipment List

6/13/95

Equipment Description	Equipment Designation	Capacity	Material of Construction	Dimensions	Comment
CCC CANISTER HANDLING ROBOT	CN-2326				New equipment installed during conversion
CCC CCTV W/VIEWING STAION	TV-2328				New equipment installed during conversion
CCC CELL LIGHT ASSEMBLIES (8)	LT-2329				New equipment installed during conversion
CWC JIB CRANE W/ CONTROL PANEL (#2)	CN-2330				New equipment installed during conversion
CWC CART ENTRY DOOR	SD-2331				New equipment installed during conversion
CANISTER WELDER #3 W/ POWER PACK	WE-2332				New equipment installed during conversion
CANISTER WELDER #4 W/ POWER PACK (SPARE)	WE-2333				New equipment installed during conversion
WELD INSPECTION EQUIPMENT (#2)	MY-2334				New equipment installed during conversion
CWC MOTORIZED HATCH (NON-SHIELDED)	RA-2335				New equipment installed during conversion
CDC CANISTER HANDLING ROBOT	CN-2336				New equipment installed during conversion
CANISTER DECON TANK (#1)	TK-2337				New eqiupment installed during conversion

Single Line TWRS Treatment Plant Equipment List

6/13/95

Equipment Description	Equipment Designation	Capacity	Material of Construction	Dimensions	Comment
CANISTER DECON TANK (#2)	TK-2338				New equipment installed during conversion
CANISTER RINSE TANK (#1)	TK-2339				New equipment installed during conversion
CANISTER RINSE TANK (#2)	TK-2340				New equipment installed during conversion
CDC CART ENTRY DOOR	SD-2341				New equipment installed during conversion
CDC CART EXIT DOOR	SD-2342				New equipment installed during conversion
CDC MOTORIZED HATCH (SHIELDED)	RA-2343				New equipment installed during conversion
CCTV LIFT TABLE (#2)	HD-2344				New equipment installed during conversion
CANISTER TRUNTABLE W/ CONTROL PANEL (#2)	TU-2345				New equipment installed during conversion
STC CANISTER HANDLING ROBOT	CN-2346				New equipment installed during conversion
STC CANISTER EXIT/SHIELD DOOR	SD-2347				New equipment installed during conversion
CELL LIGHT ASSEMBLIES (8)	LT-2348				New equipment installed during conversion

Single Line TWRS Treatment Plant Equipment List

6/13/95

Equipment Description	Equipment Designation	Capacity	Material of Construction	Dimensions	Comment
OVERPACK ENTRY CRANE	CN-2349				New equipment installed during conversion
OVERPACK ENTRY HATCH (SHIELDED)	RA-2350				New equipment installed during conversion
CELL LIGHT ASSEMBLIES (8)	LT-2351				New equipment installed during conversion
STC PERSONNEL ACCESS/SHIELD DOOR	SD-2352				New equipment installed during conversion
OWC WINDOW	SZ-2353				New equipment installed during conversion
OWC CCTV & VIEWING STATION	TV-2354				New equipment installed during conversion
OWC CELL LIGHT ASSEMBLIES (8)	LT-2355				New equipment installed during conversion
WELD INSPECTION EQUIPMENT	MY-2356				New equipment installed during conversion
OWC PERSONNEL ACCESS/SHIELD DOOR	SD-2357				New equipment installed during conversion
PNEUMATIC TRANSFER SYSTEM (PTS) #1	XE-2359				New equipment installed during conversion
PNEUMATIC TRANSFER SYSTEM (PTS) #2	XE-2360				New equipment installed during conversion

Single Line TWRS Treatment Plant Equipment List

6/13/95

Equipment Description	Equipment Designation	Capacity	Material of Construction	Dimensions	Comment
CCTV W/ VIEWING STATION	TV-2361				New equipment installed during conversion
CCTV LIFT TABLE	HD-2362				New equipment installed during conversion
OVERPACK TURNTABLE W/ CONTROL PANEL	TU-2363				New equipment installed during conversion
TEMPERATURE PROBE & CONTROL PANEL	TE-2364				New equipment installed during conversion
STC LIGHT ASSEMBLIES (8)	LT-2365				New equipment installed during conversion
STC OVERPACK HANDLING ROBOT	CN-2366				New equipment installed during conversion
GAMMA DETECTOR	RE-2368				New equipment installed during conversion
NEUTRON DECTECTOR	RE-2369				New equipment installed during conversion
ODC OVERPACK ENTRY/SHIELD DOOR	SD-2370				New equipment installed during conversion
CCTV W/ VIEWING STATION	TV-2371				New equipment installed during conversion
ODC LIGHT ASSEMBLIES (8)	LT-2372				New equipment installed during conversion

Single Line TWRS Treatment Plant Equipment List

6/13/95

Equipment Description	Equipment Designation	Capacity	Material of Construction	Dimensions	Comment
OVERPACK LOAD OUT/WEIGH STATION	SR-2374				New equipment installed during conversion
CCTV W/ VIEWING STATION	TV-2375				New equipment installed during conversion
LOC LIGHT ASSEMBLIES (8)	LT-2376				New equipment installed during conversion
OVERPACK EXIT HATCH	RA-2377				New equipment installed during conversion
CANISTER TRANSFER CART #9	CC-2378				New equipment installed during conversion
CANISTER TRANSFER CART #10	CC-2379				New equipment installed during conversion
CANISTER TRANSFER CART #11	CC-2380				New equipment installed during conversion
CANISTER TRANSFER CART #12	CC-2381				New equipment installed during conversion
TRANSFER CART RAIL SYSTEM W/ CONTROLS	CC-2382				New equipment installed during conversion
OVERPACK TRANSFER CART #1	CC-2383				New equipment installed during conversion
OVERPACK TRANSFER CART #2	CC-2384				New equipment installed during conversion

Single Line TWRS Treatment Plant Equipment List

Equipment Description	Equipment Designation	Capacity	Material of Construction	Dimensions	Comment
OVERPACK TRANSFER CART #3	CC-2385				New equipment installed during conversion
OVERPACK TRANSFER CART #4	CC-2386				New equipment installed during conversion
OVERPACK TRANSFER CART #5	CC-2387				New equipment installed during conversion
OVERPACK TRANSFER CART #6	CC-2388				New equipment installed during conversion
OVERPACK CELL HATCH (SHIELDED)	RA-2389				New equipment installed during conversion
OVERPACK JIB CRANE	CN-2390	1.8 TON			New equipment installed during conversion
CANISTER TRANSFER CART	CC-2391		304L		SIMILAR TO CC-2293-3B. New equipment installed during conversion
CANISTER TRANSFER CART	CC-2392		304L		SIMILAR TO CC-2293-3B. New equipment installed during conversion
TRANSFER CART RAIL SYSTEM W/CONTROLS	CC-2393				SIMILAR TO CC-2292-3B. New equipment installed during conversion
TRANSFER CART RAIL SYSTEM W/CONTROLS	CC-2394				SIMILAR TO CC-2292-3B. New equipment installed during conversion

Single Line TWRS Treatment Plant Equipment List

6/13/95

Equipment Description	Equipment Designation	Capacity	Material of Construction	Dimensions	Comment
CART FOR MELTER	CC-2407	140 TON	304L		New equipment installed during conversion
MELTER CART RAIL SYSTEM W/CONTROLS	CC-2408	26 m			Reused "AS IS" following conversion
CASK/CANISTER LOADING CRANE	CN-2926	30 Mg	CARBON STEEL		New equipment installed during conversion
CASK/CANISTER IMPACT WRENCH	HD-2927	550 nm	CARBON STEEL		New equipment installed during conversion
CASK/CANISTER TRANSFER HATCH	RA-2928		CARBON STEEL		New equipment installed during conversion
CASK/CANISTER SHIELD WINDOW	SZ-2929		GLASS		New eqiupment installed during conversion
CASK/CANISTER SHIELD DOOR	SD-2930		CARBON STEEL		New equipment installed during conversion
CASK/CANISTER CCTV	TV-2931A		CARBON STEEL		New equipment installed during conversion
CASK/CANISTER CCTV	TV-2931B		CARBON STEEL		New equipment installed during conversion
CASK TRANSPORTER	CC-2932	130 Mg	CARBON STEEL		New equipment installed during conversion
TRANSFER CART #1	CC-2933	100 MT	304L		SIMILAR TO CC-2383 CAPACITY FACTOR 4. New equipment installed during conversion

Single Line TWRS Treatment Plant Equipment List

6/13/95

Equipment Description	Equipment Designation	Capacity	Material of Construction	Dimensions	Comment
TRANSFER CART #2	CC-2934	100 MT	304L		SIMILAR TO CC-2383 CAPACITY FACTOR 4. New equipment installed during conversion
TRANSFER CART SYSTEM W/CONTROLS	CC-2935				New equipment installed during conversion
TRANSFER CART SYSTEM W/CONTROLS	CC-2936				New equipment installed during conversion
CMA CRANE NOT REMOTE (CENTRIFUGE/EVAPORATION)	CN-2938	14 TON	CARBON STEEL		Reuse "AS IS" following conversion
CRANE (MELTER CELL) REMOTE WITH CCTV	CN-2940A	91 TON	CARBON STEEL		Reuse "AS IS" following conversion
CRANE (MELTER CELL) REMOTE WITH CCTV	CN-2940B	91 TON	CARBON STEEL		Reuse "AS IS" following conversion
CRANE (REDC) REMOTE WITH CCTV	CN-2941	91 TON	CARBON STEEL		Reuse "AS IS" following conversion
EMM (REDC) ON BRIDGE WITH CCTV	CN-2942				Reuse "AS IS" following conversion
CRANE (RAILROAD WELL) NOT REMOTE	CN-2943	91 TON	CARBON STEEL		Reuse "AS IS" following conversion
SHIELD DOOR (CMA-RCDC)	CN-2944				Reuse "AS IS" following conversion
SHIELD DOOR (CMA-CENTRIFUGE/EVAPORATOR CELL)	CN-2945				Reuse "AS IS" following conversion

Single Line TWRS Treatment Plant Equipment List

6/13/95

Equipment Description	Equipment Designation	Capacity	Material of Construction	Dimensions	Comment
RCDC CUT-UP EQUIPMENT ONE LOT	CN-2946				Reuse "AS IS" following conversion
MELTER CUT-UP CELL - CUT UP EQUIPMENT ONE LOT	CN-2947				Reuse "AS IS" following conversion
CRANE (CONTACT MAINT CELL) NOT REMOTE	CN-2948	14 TON	CARBON STEEL		Reuse "AS IS" following conversion
CMA (RCDC) CRANE NOT REMOTE	CN-2949	14 TON	CARBON STEEL		Reuse "AS IS" following conversion
CRANE (CENTRIFUGE/EVAPORATION) REMOTE WITH CCTV	CN-2950	45 TON	CARBON STEEL		Reuse "AS IS" following conversion
FLASKING AREA CRANE	CN-2951	15 mt	CARBON STEEL		Reuse "AS IS" following conversion
CANISTER HANDLING ROBOT	CN-2952A				New equipment installed during conversion
CANISTER HANDLING ROBOT	CN-2952B				New equipment installed during conversion
CANISTER HANDLING ROBOT	CN-2952C				New equipment installed during conversion
Filter Feed Tank	TK-150	114 m3	316 SS		Power estimated. Reused "AS IS" following conversion.
Filtrate Receipt Tank	TK-155	114	316 SS		Power estimated. Reused "AS IS" following conversion.

Single Line TWRS Treatment Plant Equipment List

6/13/95

Equipment Description	Equipment Designation	Capacity	Material of Construction	Dimensions	Comment
Digest Tank	TK-158A	227 m3	316 SS		Power estimated. Reused "AS IS" following conversion.
Pump	P-152	379 lpm	316 SS		Reused "AS IS" following conversion.
Pump	P-151	3000 lpm	316 SS		Reused "AS IS" following conversion.
Pump	P-157	379 lpm	316 SS		Reused "AS IS" following conversion.
Pump	P-160B	3000 lpm	316 SS		Reused "AS IS" following conversion.
Pump	P-159B	379 lpm	316 SS		Reused "AS IS" following conversion.
Pump	P-159A	379 lpm	316 SS		Reused "AS IS" following conversion.
Pump	P-160A	3000 lpm	316 SS		Reused "AS IS" following conversion.
Crossflow Filter Packs	F-153	TBD	316 SS		Each pack contains 3 metal mesh filters, each measuring 0.61 m D x 1.68 m L
Crossflow Filter Packs	F-154	TBD	316 SS		Each pack contains 3 metal mesh filters, each measuring 0.61 m D x 1.68 m L
Recycle Glass Melter	EM-350A				Refer to 2010 Cost Estimate (off-spec. glass recycle) installed for HLW campaign

Single Line TWRS Treatment Plant Equipment List

6/13/95

Equipment Description	Equipment Designation	Capacity	Material of Construction	Dimensions	Comment
Recycle Glass Melter	EM-350B				Refer to 2010 Cost Estimate (off-spec. glass recycle) installed for HLW campaign
Quench Flume	MQ-351A		304L SS		Refer to 2010 Cost Estimate (off-spec. glass recycle) installed for HLW campaign
Quench Flume	MQ-351B		304L SS		Refer to 2010 Cost Estimate (off-spec. glass recycle) installed for HLW campaign
Roll Crusher	MC-353A		304L SS		Refer to 2010 Cost Estimate (off-spec. glass recycle) installed for HLW campaign
Roll Crusher	MC-353B		304L SS		Refer to 2010 Cost Estimate (off-spec. glass recycle) installed for HLW campaign
Recycled Glass Quench Tank	TK-354	35.5 m3	316L SS		Refer to 2010 Cost Estimate (off-spec. glass recycle) installed for HLW campaign
Condenser	EC-352A		316L SS		Refer to 2010 Cost Estimate (off-spec. glass recycle) installed for HLW campaign.
Condenser	EC-352B		316L SS		Refer to 2010 Cost Estimate (off-spec. glass recycle) installed for HLW campaign
Pump	P-355	100 lpm	316L SS		Refer to 2010 Cost Estimate (off-spec. glass recycle) installed for HLW campaign

Single Line TWRS Treatment Plant Equipment List

6/13/95

Equipment Description	Equipment Designation	Capacity	Material of Construction	Dimensions	Comment
Cyclone Separator	FC-356	100 lpm	316L SS		Refer to 2010 Cost Estimate (off-spec. glass recycle) installed for HLW campaign
Pump	P-358	100 lpm	316L SS		Refer to 2010 Cost Estimate (off-spec. glass recycle) installed for HLW campaign
Recycled Glass Settling Tank	TK-357	35.5 m3	316L SS		Refer to 2010 Cost Estimate (off-spec. glass recycle) installed for HLW campaign
Quench Water Recycle Tank	TK-360	1.89 m3	316L SS		Refer to 2010 Cost Estimate (off-spec. glass recycle) installed for HLW campaign
Pump	P-359	368 lpm	316L SS		Refer to 2010 Cost Estimate (off-spec. glass recycle) installed for HLW campaign
Pump	P-361		316L SS		Refer to 2010 Cost Estimate (off-spec. glass recycle) installed for HLW campaign
HLW Quench Tower	T-600	7,140 sm3/hr	6" Refractory Lined Inconel 690		New equipment installed during conversion
Canister Positioning Arm	HD-325A		304L SS		HD-130-001 - Added during conversion
Canister Positioning Arm	HD-325B		304L SS		HD-130-001 - Added during conversion

Single Line TWRS Treatment Plant Equipment List

6/13/95

Equipment Description	Equipment Designation	Capacity	Material of Construction	Dimensions	Comment
Gamma Detector Embed	HD-326A		304L SS/Titanium		MY-130-002 - Added during conversion
Gamma Detector Embed Tubes	HD-326B		304L SS/Titanium		MY-130-002 - Added during conversion
Cobalt Source Tree	RA-327		304L SS/Titanium		RA-130-015 - Added during conversion
Heater	E-710	0.5 kW			Added during conversion for NH3 removal
Reactor	R-711		316L ss		Added during conversion for NH3 removal
Cooler	EC-712	264 MJ/hr	316L ss		Added during conversion for NH3 removal
CHLORIDE PURGE EVAPORATOR	EV-660	6.24 MW	HASTELLOY C-276		SIMILAR TO EV-402. MAY REMAIN IN SERVICE FOLLOWING CONVERSION IF REQ'D FOR CHLORIDE PURGE
CHLORIDE PURGE CONDENSER	EC-661	6.36 MW	HASTELLOY C-276		SIMILAR TO EC-403. MAY REMAIN IN SERVICE FOLLOWING CONVERSION IF REQ'D FOR CHLORIDE PURGE
DISTILLATION FEED TANK	TK-662	14.4 m3	ALLOY 20		SIM TO TK-611 W/DIF. METALLURGY. MAY REMAIN IN SERV. FOL. CONVER. IF RQD FOR CHLOR. PURGE
PUMP	P-663	22.7 m3/hr, 200 kPa	ALLOY 20		HWVP TRANS. PUMP W/DIF. METALLURGY. MAY REM. IN SERV. FOL. CONVR. IF RQD FOR CHLORIDE PURG

Single Line TWRS Treatment Plant Equipment List

6/13/95

Equipment Description	Equipment Designation	Capacity	Material of Construction	Dimensions	Comment
PREHEATER	EC-664	76 kW	ALLOY 20		MAY REMAIN IN SERVICE FOLLOWING CONVERSION IF REQ'D FOR CHLORIDE PURGE
HCl STRIPPING COLUMN	T-665		ALLOY 20		MAY REMAIN IN SERVICE FOLLOWING CONVERSION IF REQ'D FOR CHLORIDE PURGE
HCl REBOILER	EC-666	938 kW	ALLOY 20		MAY REMAIN IN SERVICE FOLLOWING CONVERSION IF REQ'D FOR CHLORIDE PURGE
HCl DISTILLATION TANK	TK-667	8.7 m3	ALLOY 20		MAY REMAIN IN SERVICE FOLLOWING CONVERSION IF REQ'D FOR CHLORIDE PURGE
PUMP	P-668	22.7 m3/hr, 131 kPa	ALLOY 20		HWVP TRANS PUMP W/DIF METALLURGY. MAY REMAIN IN SERV FOL CONVERS IF RQD FOR CHLORIDE PURGE
HCl RECTIFYING COLUMN	T-669		HASTELLOY C-276		MOUNTED ON TK-08. MAY REMAIN IN SERVICE FOLLOWING CONVERSION IF REQ'D FOR CHLORIDE PURGE
HCl CONDENSER	EC-670	645 kW	HASTELLOY C-276		SIMILAR TO EC-403. MAY REMAIN IN SERVICE FOLLOWING CONVERSION IF REQ'D FOR CHLORIDE PURGE
HCl OVERHEAD ACCUMULATOR	TK-671	0.62 m3	HASTELLOY C-276		MAY REMAIN IN SERVICE FOLLOWING CONVERSION IF REQ'D FOR CHLORIDE PURGE
HF STRIPPING COLUMN	T-672		HASTELLOY C-276		MAY REMAIN IN SERVICE FOLLOWING CONVERSION IF REQ'D FOR CHLORIDE PURGE

Single Line TWRS Treatment Plant Equipment List

6/13/95

Equipment Description	Equipment Designation	Capacity	Material of Construction	Dimensions	Comment
HF REBOILER	EC-673	205 kW	HASTELLOY C-276		MAY REAMIN IN SERVICE FOLLOWING CONVERSION IF REQ'D FOR CHLORIDE PURGE
HF CONDENSER	EC-674	322 kW	HASTELLOY C-276		SIMILAR TO EC-403. MAY REM. IN SERVICE FOL. CONVERSION IF REQ'D FOR CHLORIDE PURGE
HF OVERHEAD ACCUMULATOR	TK-675	0.25 m3	HASTELLOY C-276		MAY REMAIN IN SERVICE FOLLOWING CONVERSION IF REQ'D FOR CHLORIDE PURGE
BLOWER	MB-676	129 Nm3/hr, 3.73 kW	HASTELLOY C-276		SIM. TO BLOWER MB-700A&B. MAY REM. IN SERV. FOL. CONVERSION IF REQ'D FOR CHLORIDE PURGE
CHLORIDES PURGE NEUTRALIZATION TANK	TK-677A	14.4 m3	HASTELLOY C-276		SAME AS TK-611. MAY REMAIN IN SERVICE FOLLOWING CONVERSION IF REQ'D FOR CHLORIDE PURGE
CHLORIDES PURGE NEUTRALIZATION TANK	TK-677B	14.4 m3	HASTELLOY C-276		SAME AS TK-611. MAY REMAIN IN SERVICE FOLLOWING CONVERSION IF REQ'D FOR CHLORIGE PURGE
PUMP	P-678A	22.7m3/hr, 76 kPa	HASTELLOY C-276		HWVP TRANSFER PUMP. MAY REM. IN SERVICE FOL. CONVERSION IF REQ'D FOR CHLORIDE PURGE
PUMP	P-678B	22.7m3/hr, 76 kPa	HASTELLOY C-276		HWVP TRANSFER PUMP. MAY REM. IN SERVICE FOL. CONVERSION IF REQ'D FOR CHLORIDE PURGE
RECYCLE NEUTRALIZATION TANK	TK-680	14.4m3	316L SS		SAME AS TK-611. MAY REM. IN SERVICE FOL. CONVERSION IF REQ'D FOR CHLORIDE PURGE

Single Line TWRS Treatment Plant Equipment List

6/13/95

Equipment Description	Equipment Designation	Capacity	Material of Construction	Dimensions	Comment
PUMP	P-681	22.7m3/hr, 159 kPa	316L SS		HWVP TRANSFER PUMP. MAY REM. IN SERVICE FOL. CONVERSION IF REQ'D FOR CHLORIDE PURGE
CHLORIDE GROUTING EVAPORATOR	EV-682	97 kW	316L SS		FORCED-CIRC. EVAPORATOR. MAY REM. IN SERVICE FOL. CONVERSION IF RQD FOR CHLOR. PURGE
PUMP	P-683	22.7m3/hr, 103 kPa	316L SS		
CONDENSER	EV-684	93 kW	316L SS		SIMILAR TO EC-1101-4. MAY REM. IN SERVIEC FOL. CONVERSION IF REQ'D FOR CHLORIDE PURGE
GROUT FEED TANK	TK-685	2.6m3	316L SS		SIMILAR TO TK-1200-3B. MAY REM. IN SERVICE FOL. CONVERSION IF REQ'D FOR CHLORIDE PURGE
GROUT FEED PUMP	P-686A	4.3m3/hr, 97 kPa	316L SS		SIMILAR TO P-1160-3B. MAY REM. IN SERVICE FOL. CONVERSION IF REQ'D FOR CHLORIDE PURGE
GROUT FEED PUMP	P-686B	4.3m3/hr, 97 kPa	316L SS		SIMILAR TO P-1160-3B. MAY REM. IN SERVICE FOL. CONVERSION IF REQ'D FOR CHLORIDE PURGE
CALCIUM HYDROXIDE FEED TANK	TK-687	1.9m3	316L SS		SAME AS TK-1200-3B. MAY REMAIN IN SERVICE FOL. CONVERSION IF REQ'D FOR CHLORIDE PURGE
CALCIUM HYDROXIDE FEED PUMP	P-688	1.6m3/hr, 76 kPa	316L SS		SIMILAR TO P-1160-3B. MAY REMAIN IN SERV. FOL. CONVERSION IF REQ'D FOR CHLORIDE PURGE

Single Line TWRS Treatment Plant Equipment List

Equipment Description	Equipment Designation	Capacity	Material of Construction	Dimensions	Comment
CALCIUM HYDROXIDE STORAGE TANK	TK-689	16m3	316l SS		SIMILAR TO TK-1014. MAY REMAIN IN SERV. FOLLOWING CONVERSION IF REQ'D FOR CHLORIDE PURGE
CALCIUM HYDROXIDE TRANSFER PUMP	P-690	3.2m3/hr, 207 kPa	316L SS		SIMILAR TO P-1017. MAY REMAIN IN SERV. FOLLOWING CONVERSION IF REQ'D FOR CHLORIDE PURGE
SAMPLE PUMP	P-679A	11.4m3/hr, 497 kPa	HASTELLOY C-276		HWVP SAMPLE PUMP. MAY REMAIN IN SERV. FOLLOWING CONVERSION IF REQ'D FOR CHLORIDE PURGE
SAMPLE PUMP	P-679B	11.4m3/HR, 497 kPa	HASTELLOY C-276		HWVP SAMPLE PUMP. MAY REMAIN IN SERV. FOLLOWING CONVERSION IF REQ'D FOR CHLORIDE PURGE
Digest Tank	TK-158B	227 m3	316 SS		Power estimated. Reused "AS IS" following conversion.
Pump	P-156	379 lpm	316 SS		Reused "AS IS" Following conversion.
HNO3 Eluant Tank	TK-228	1 m3	316 SS		Removed from service following conversion.
GLYCOLIC ACID FEED TANK	TK-362	3.8 m3	CS		Installed for HLW campaign.
PUMP	P-363	100 lpm	CS		Installed for HLW campaign.
PUMP	P-405B	379 LPM, 345 kPa	316L SS		Reused "AS IS" following conversion.

Single Line TWRS Treatment Plant Equipment List

6/13/95

Equipment Description	Equipment Designation	Capacity	Material of Construction	Dimensions	Comment
LLW EVAPORATOR CATCH TANK	TK-447	35.5 m3	HASTELLOY C22		REMOVED FROM SERVICE FOLLOWING CONVERSION.
PUMP	P-448	379 l/m	316L SS		REMOVED FROM SERVICE FOLLOWING CONVERSION.
LLW SCRUB FILTER TANK	TK-611	12.6 m3	HASTELLOY C22		REUSED "AS IS" FOLLOWING CONVERSION (FOR CHLORIDE PURGE OPERATION).
ELECTRIC PROCESS STEAM GENERATOR	EV-1124F	12.4 GJ/hr			Removed from service after conversion.
ELECTRIC PROCESS STEAM GENERATOR	EV-1124G	12.4 GJ/hr			Removed from service after conversion.
STANDBY ELECTRIC HEATER	E-1125F	24.0 kW	N/A		Removed from service after conversion
STANDBY ELECTRIC HEATER	E-1125G	24.0 kW	N/A		Removed from service after conversion
CIRCULATING PUMP	P-1127L	408 m3/hr, 69 kPa	304L SS		Removed from service after conversion.
CIRCULATING PUMP	P-1127M	408 m3/hr, 69 kPa	304L SS		Removed from service after conversion.
CIRCULATING PUMP	P-1127N	408 m3/hr, 69 kPa	304L SS		Removed from service after conversion.
CIRCULATING PUMP	P-1127P	408 m3/hr, 69 kPa	304L SS		Removed from service after conversion.

Single Line TWRS Treatment Plant Equipment List

Equipment Description	Equipment Designation	Capacity	Material of Construction	Dimensions	Comment
BOILER FEED WASTER CHEMICAL INJECTION PUMP	P-1128F	3.8 LPM, 1,365 kPa	304L SS		Removed from service after conversion
BOILER FEED WATER CHEMICAL INJECTION PUMP	P-1128F	3.8 LPM, 1,365 kPa	304L SS		Removed from service after conversion.
BOILER FEED WATER CHEMICAL INJECTION PUMPT	P-1128G	3.8 LPM, 1,355 kPa	304L SS		Removed from service after conversion.
BLOWDOWN DRUM	TK-1129F	0.9 m3	304L SS		Removed from service after conversion
BLOWDOWN DRUM	TK-1129G	0.9 m3	304L SS		Removed from service after conversion
CHEMICAL ADDITION TANK	TK-1130F	0.6 m3	304L SS		Removed from service after conversion.
CHEMICAL ADDITION TANK	TK-1130G	0.6 m3	304L SS		Removed from service after conversion.
PROCESS CONDENSATE PUMP	P-1137C	24.6 m3/hr, 1,390 kPa	304L SS		Re-used "AS IS" after conversion
PROCESS CONDENSATE PUMP	P-1137D	24.6 m3/HR, 1,390 kPa	305L SS		Re-used "AS IS" after conversion
LLW MELTER FEED ADJUSTMENT TANK	TK-404B	35.5 m3	HASTELLOY C-22		Reused "AS IS" following conversion.
DIESEL FUEL TANK	TK-2914B	26.5 m3	CARBON STEEL		Reused "AS IS" following conversion

Single Line TWRS Treatment Plant Equipment List

6/13/95

Equipment Description	Equipment Designation	Capacity	Material of Construction	Dimensions	Comment
DAY DIESEL FUEL TANK	TK-2915B	2.3 m3	CARBON STEEL		Reused "AS IS" following conversion
EMERGENCY GENERATOR	DG-2916B	1mw			Reused "AS IS" following conversion

APPENDIX D

INITIAL CAPITAL COST ESTIMATE

This page intentionally left blank.

Westinghouse Hanford Company

Internal Memo

From: Process Design
Phone: 376-2745 H5-49
Date: May 26, 1995
Subject: "SINGLE LINE FACILITY" COST ESTIMATE REVIEW

74620-95-019

To: J. O. Honeyman S7-81

cc: J. A. Swenson H5-49
JSG File/LB

Stone & Webster Engineering has completed an independent review of the "Single Line Facility" cost estimate. This estimate was prepared for us by Fluor Daniel and reviewed by Tony Waldo of ICF Kaiser Hanford Company who is matrixes to my staff. The Single Line Facility houses the TWRS flow sheet which includes Pretreatment, LLW and the ability to convert to HLW processing. They concentrated their review in the area of contractor overhead and profit, construction and project management, engineering, contingency, process equipment costs, unit prices and building costs/SF basis. The letter documenting the cost summary (Attachment 1) and review (Attachment 2) are attached and the findings are summarized below.

1.) Fully loaded labor rates, used in the cost estimate, appeared to be reasonable.

2.) All of the markup percentages used on the vitrification facility (i.e. OH&P, CM, PM, Engineering and Contingency) appeared to be reasonable. However the same markups on facilities like warehouses, office buildings, etc. were too high and recommended lowering in this area.

3.) Initially the process equipment pricing appeared to be very high for the vitrification facility (primarily for tanks, pumps and agitators). Once vendors were contacted, that fabricates this type of special equipment, the reviewer changed his mind and decided that their costs were reasonable.

4.) The cost per SF and CF for the vitrification facility appeared to be reasonable.

5.) The cost per SF and CF for support facilities was difficult for the reviewer to follow and appeared to be too high. This area received the most criticism as the reviewer believed that it was very conservative, by as much as $86M and should be reviewed once better details is available.

Hanford Operations and Engineering Contractor for the US Department of Energy

Conclusion

The Stone & Webster reviewer concluded that the cost estimating methods were consistent and based upon his experience the cost estimates were "conservative but reasonable and not drastically high". Stone & Webster believes that the Single Line Facility cost estimate is $1,450,000,000.

It was also recommended that all of the detailed backup, for the cost estimates, located at Fluor Daniel be reproduced and located with the responsible cost estimator.

John Garfield

J. S. Garfield, Manager
Process Design

hlc

Attachments (2)

bcc

RL - L. Erickson

- G. H. Sanders

ICF KH - T. L. Waldo

IN $\000S

4D - SINGLE LINE

	DIRECT	ENG.	CM	PM	CONTIN.	4D TEC
PROCESS FACILITY						
VITRIFICATION CIVIL/STRUCTURAL	$138,309	$55,324	$13,831	$20,746	$91,284	$319,494
VIT. FACILITY - EQUIPMENT						
BUILDING EQUIPMENT	$117,792	$47,117	$11,779	$17,669	$77,743	$272,099
PROCESS EQUIPMENT	$200,564	$80,226	$20,056	$30,085	$132,373	$463,304
	$456,665	$182,666	$45,667	$68,500	$301,399	$1,054,897
SUPPORT FACILITIES						
REG. ENTRY & LAB ANNEX	$17,660	$7,064	$1,766	$2,649	$11,656	$40,795
REG. ENTRY & LAB ANNEX-EQUIP.	$22,276	$8,910	$2,228	$3,341	$14,702	$51,458
CFB ANNEX	$1,811	$725	$181	$272	$1,195	$4,184
CONTAINER STAGING ANNEX	$1,347	$539	$135	$202	$889	$3,112
CONT. STAGING ANNEX - EQUIP.	$161	$65	$16	$24	$107	$373
FAN/FILTER ANNEX	$6,325	$2,530	$632	$949	$4,174	$14,610
FAN/FILTER ANNEX - EQUIP.	$4,428	$1,771	$443	$664	$2,923	$10,229
EMERG. GEN.	$1,871	$749	$187	$281	$1,235	$4,323
EMERG. GEN.- EQUIP.	$15,132	$6,053	$1,513	$2,270	$9,987	$34,955
LLW CONTAINER XFER TUN	$23,037	$9,215	$2,304	$3,456	$15,204	$53,215
EMERG. RESP. CENTER	$2,405	$962	$241	$361	$1,587	$5,556
EMERG. RESP. CENTER - EQUIP.	$1,207	$483	$121	$181	$797	$2,789
COLD CHEM. ANNEX	$210	$84	$21	$31	$139	$485
COLD CHEM. ANNEX - EQUIP.	$4,679	$1,872	$468	$702	$3,088	$10,808
BULK HANDLING AREA	$321	$128	$32	$48	$212	$742
BULK HANDLING AREA - EQUIP.	$9,098	$3,639	$910	$1,365	$6,005	$21,016
MECH. UTIL BLDG.	$1,613	$645	$161	$242	$1,064	$3,725
MECH. UTIL BLDG. - EQUIP.	$7,883	$3,153	$788	$1,182	$5,203	$18,209
WATER PUMPHOUSE	$622	$249	$62	$93	$411	$1,437
WATER PUMPHOUSE - EQUIP.	$1,609	$644	$161	$241	$1,062	$3,717
SWITCHGEAR BLDG.	$643	$257	$64	$96	$425	$1,486
SWITCHGEAR BLDG. - EQUIP.	$5,699	$2,280	$570	$855	$3,761	$13,165
COOLING TOWER	$3,767	$1,507	$377	$565	$2,486	$8,702
WAREHOUSE	$1,244	$497	$124	$187	$821	$2,873
WAREHOUSE - EQUIP.	$105	$42	$10	$16	$69	$242
FAB & ASSY. SHOP	$2,832	$1,133	$283	$425	$1,869	$6,542
FAB & ASSY. SHOP - EQUIP.	$879	$352	$88	$132	$580	$2,030
SUBSTATION	$11,220	$4,488	$1,122	$1,683	$7,405	$25,919
FEED LINE & SWITCHYARD	$5,751	$2,300	$575	$863	$3,796	$13,285
MECH UTIL.	$3,765	$1,506	$377	$565	$2,485	$8,698
ELECTR. DISTRI	$2,380	$952	$238	$357	$1,571	$5,497
SITE PREP	$2,666	$1,066	$267	$400	$1,759	$6,158
ROADS	$808	$323	$81	$121	$533	$1,867
RAIL LINE	$127	$51	$13	$19	$84	$294
FINAL SITE WORK	$1,375	$550	$137	$206	$907	$3,176
LIGHTING	$167	$67	$17	$25	$110	$385
FENCING	$153	$61	$15	$23	$101	$353
FEED XFER LINES	$2,874	$1,150	$287	$431	$1,897	$6,640
	$170,152	$68,061	$17,015	$25,523	$112,300	$393,050
TOTAL ESTIMATED COST (TEC)	$626,817	$250,727	$62,682	$94,023	$413,699	$1,447,947

STONE & WEBSTER ENGINEERING CORPORATION

1200 JADWIN AVENUE, SUITE 455
RICHLAND, WASHINGTON 99352

BOSTON
NEW YORK
CHERRY HILL, N.J.
DENVER
HOUSTON
DALLAS
PORTLAND, OREGON
RICHLAND, WA
WASHINGTON, D.C.

TELEPHONE: (509) 943-8392

Donald L. Huddleson
Contract Administrator
ICF Kaiser Hanford Company
P. O. Box 888, MSIN G7-21
Richland, WA 99352

May 11, 1995
05696.01
SW-ICFKH-548L

TRANSMITTAL OF "SINGLE LINE FACILITY" COST ESTIMATE REVIEW
CONTRACT NO. KH-8010F
A/E LABORATORY, OFFICE STORAGE, SHOP FACILITIES DESIGN HANFORD SITE, RICHLAND, WASHINGTON
TASK ORDER KEH-8010F-1 (APPENDIX A)

Dear Mr. Huddleson:

Please find enclosed the "Single Line Facility" cost estimate review prepared for ICF Kaiser Hanford Company by Mr. George Takacs of Stone & Webster Engineering Company. We appreciate this opportunity.

If you have any questions or require further information please feel free to give me a call on (509) 943-8392.

Sincerely,

Donald P. Kurkjian, P.E.
Project Manager

DPK/cjl

cc: Tony Waldo, ICFKH, H5-49

Enclosure

MAILING ADDRESS:
P.O. BOX 5406
DENVER, CO 80217-5406

GEORGE L. TAKACS
PRINCIPAL COST & SCHEDULING ENGINEER

STONE & WEBSTER ENGINEERING CORPORATION
7677 EAST BERRY AVENUE
ENGLEWOOD, COLORADO 80111-2137
TELEPHONE: (303) 741-7314
FAX: (303) 741-7670

1889 · STONE & WEBSTER · 1989

Kaiser\huddlso.548

WHC-SD-WM-TI-694
Revision 0

COST ESTIMATE REVIEW
of
"SINGLE LINE FACILITY"

Prepared for:
ICF Kaiser Hanford Company

By:
Stone & Webster Engineering Corporation

May 1995

COST ESTIMATE REVIEW of "SINGLE LINE FACILITY"

Stone & Webster Engineering was contracted by ICF Kaiser Hanford Company to perform an independent review of the "Single Line Facility" capital cost estimate. The Single Line Facility is a low level waste vitrification plant rated at 120 metric tons per day. In the late 80's and early 90's Fluor-Daniel had completed design on the High Level Waste Vitrification Plant (HWVP) facility (2.4 metric tons/day), however, this project was placed on hold prior to construction. Also prior to HWVP, Martin Marrietta was building the Dense Waste Processing Facility (DWPF) at Savanah River and all of this cost information was available to the Hanford team. Since the HWVP project was placed on hold in 1992, numerous studies have been completed by Fluor-Daniel and Ebasco/BNFL and are summarized in the Configuration Facility Study attached.

Documents evaluated in the independent review include a Kaiser IEST computer printout of the Tank Waste Remediation System (TWRS) - facility configuration evaluation case 4C-R1, and four volumes of estimate backup for revisions 1 and 2 of case 4D (single line). The review process concentrated on:

- review of factors used for contractor overhead and profit, engineering, construction management, project management and contingency,
- review of plant equipment cost and pricing basis where possible,
- review of unit prices where available,
- review of building cost on a cost/SF basis.

Factors:

The buildup of the multiplier used for indirects is summarized as follows:

Direct Cost	$100
Engineering @ 40%	40
Construction Management @ 10%	10
Sub-total	$150
Project Management @ 10%	15
Sub-total	$165
Contingency @ 40%	66
Total	$231

231/100 = 2.31 multiplier

This reviewer disagrees with applying a global factor of 131% of direct cost for indirects to the entire project. The 10% for construction and 10% for project management appear reasonable. However, 40% for engineering and 40% for contingency throughout appears to be too conservative for the supporting facilities. The total project cost may be realistically reflected if a lower percentage was used for engineering and contingency and would reflects the degree of difficulty. Engineering costs on traditional buildings like offices and warehouses rarely exceed 10% of the construction cost. A 40% allowance for engineering would be at the extreme high end, but may be justified for the vitrification facility, due to the complex nature of this plant design. In any case, it is this reviewers opinion that the 40% engineering should be applied to the vitrification facility only and a reduced percentage be used for the other support facilities. A reworked version of the above multiplier calculation for three of the options follows (Vit Bldg, RCFE, Warehouse):

	Vit Bldg	RCFE	Warehouse
DIRECT COST	100	100	100
ENGINEERING (40%/25%/15%)	40	25	15
CONSTRUCTION MGMT. (10%/10%/10%)	10	10	10
SUBTOTAL	150	135	125
PROJECT MANAGEMENT (10%/10%/10%)	15	14	13
SUBTOTAL	165	149	138
CONTINGENCY (40%/25%/15%)	66	37	21
TOTAL	231	186	159
MULTIPLIER EQUALS	2.31	1.86	1.59

An installation factor of 2.29 times the equipment cost was used, which includes 7.8% for sales tax, contractors' overhead and profit of 5% of equipment, 10% of subcontracts, and 53% of direct labor. The base labor rate used was $31.50 per hour, which is a Kaiser standard for this area, and includes base wages, fringe benefits, payroll taxes and insurance. When the 53% OH&P is added to this it translates to a $48.20 per hour fully subcontracted rate which appears reasonable for the scope of work.

Equipment Pricing

Equipment in the vitrification facility accounts for $774,108,000 or nearly half of the $1,534,000,000 total capital cost estimate. Tanks, pumps and agitators represented the largest component of the vitrification facility equipment accounting for just under 40% of the total, thus representing a good area to review for accuracy. Fluor/Daniel supporting data was requested for selected equipment and the pricing appears to be reasonable through discussions with tank, pump, agitator and material supply vendors. Radiation hardening, balancing and mechanical/electrical jumpers appear to be covered adequately. Pricing in all cases is for non NQA1 equipment.

Thorough evaluation of much of the equipment was difficult because detailed supporting documents are in Fluor/Daniel's offices in Irvine. It is recommended that a copy of all detailed data related to case 4D be sent to Kaiser's office in Richland.

Unit Prices

While unit prices are not included in the vitrification facility itself, the cost per square foot and cost per cubic foot appear to be reasonable. Substantial detail was shown for most of the supporting facilities. Representative samples of sitework, concrete, structural steel, architectural finishes, piping and electrical were reviewed and found to be reasonable when compared with SWEC's database. In all cases this comparison showed the unit prices used were within an acceptable range of accuracy.

Square Foot Costs

A cost per square foot analysis of the support facilities is difficult. Detailed estimates were developed for the central facilities study. These estimates were then factored for study 2001 which was then factored for 2015 to case 4D revision 1 and then revision 2, all without having the design in the hands of the Fluor/Daniel estimators. Case 4D Rev. 1 was based upon WBS 2001 and WBS 2015. Case 4D Rev. 2 was based upon case 4D Rev. 1 which further compounded what appears to be a conservative set of estimates to begin with. It appears these estimates could be high.

Conclusion

The total cost for the estimate reviewed was developed utilizing previous estimates, factored equipment costs or systems similar to the work required for these facilities. Estimating methods used in developing the various estimates appeared to be consistent from one to another. Based upon my experience the case 4D Rev. 2 estimate appears conservative but reasonable and not drastically high. It is conservative based on the square foot cost and the impact of factors used for indirects. The bottom line of $1,534,000,000 is well within the range of accuracy expected for an order of magnitude estimate. Based on the current scope of work as described in 4D Rev. 2, it would not be reasonable to expect cost to be as low as $1,450,000,000.

ESTIMATE SUMMARY AND VARIANCE

		REV. 1		REV. 2		DELTA		SWEC
		AREA	$ x1,000	AREA	$ x1,000	AREA	$ x1,000	$ x1,000
PROCESS FACILITY								
HANFORD VITRIVICATION FACILITY	BLDG	319,494	279,385	176,464	319,494	-143,030	40,109	319,494
HANFORD VITRIVICATION FACILITY	OTHER	0	1,122,346	0	774,108	0	-348,238	735,403
DEDICATED SUPORT FACILITITS								
REGULATED FACILITY ENTRY ANNEX	BLDG	14,849	14,371	69,940	67,690	55,091	53,319	40,795
REGULATED FACILITY ENTRY AMMEX	OTHER	0	0	0	51,458	0	51,458	51,458
CONTRACT FILTER BLOWER ANNEX	BLDG	10,114	5,207	10,114	5,207	0	0	4,184
CONTRACT FILTER BLOWER ANNEX	OTHER		0					
CONDENSATE COLLECTION ANNEX	BLDG	20,982	31,427	0	0	-20,982	-31,427	0
CONDENSATE COLLECTION ANNEX	OTHER	0	8,914	0	0	0	-8,914	0
CONTAINER STAGING ANNEX	BLDG	13,450	3,873	13,450	3,873	0	0	3,112
CONTAINER STAGING ANNEX	OTHER	0	373	0	373	0	0	373
FAN/FILTER ANNEX	BLDG	38,413	18,181	38,413	18,181	0	0	14,610
FAN/FILTER ANNEX	OTHER	0	10,229	0	10,229	0	0	10,229
EMERGENCY GENERATOR	BLDG	15,064	7,173	15,064	7,173	0	0	4,323
EMERGENCY GENERATOR	OTHER	0	31,944	0	34,955	0	3,011	34,955
LLW CONTAINER TRANSFER TUNNEL AND STORAGE VA		0	53,215	0	53,215	0	0	53,215
SHARED SUPPORT FACILITIES AND INFRASTRUCTURE:								
REGULATED TWRS COMPLEX ENTRY	BLDG	45,031	16,655	0	0	-45,031	-16,655	0
REGULATED TWRS COMPLEX ENTRY	OTHER	0	2,654	0	0	0	-2,654	0
OPERATION SUPPORT BUILDING	BLDG	56,038	18,349	0	0	-56,038	-18,349	0
OPERATION SUPPORT BUILDING	OTHER	0	98	0	0	0	-98	0
EMERGENCY RESPONSE CENTER	BLDG	13,558	6,914	13,558	6,914	0	0	5,556
EMERGENCY RESPONSE CENTER	OTHER	0	2,789	0	2,789	0	0	2,789
BULK COLD CHEMICAL BUILDING	BLDG	12,654	5,030	4,304	603	-8,350	-4,427	485
BULK COLD CHEMICAL BUILDING	OTHER	0	10,064	0	10,808	0	744	10,808
BULK HANDLING BUILDING	B3DG	0	742	0	742	0	0	742
BULK HANDLING BUILDING	OTHER	0	16,044	0	21,016	0	4,972	21,016
MECHANICAL UTILITIES BUILDING	BLDG	22,596	6,180	22,596	6,180	0	0	3,725
MECHANICAL UTILITIES BUILDING	OTHER	0	18,209	0	18,209	0	0	18,209
WATER PUMPHOUSE	BLDG	8,178	2,384	8,178	2,384	0	0	1,437

ESTIMATE SUMMARY AND VARIANCE

		REV. 1		REV. 2		DELTA		SWEC
		AREA	$ x1,000	AREA	$ x1,000	AREA	$ x1,000	$ x1,000
WATER PUMPHOUSE	OTHER	0	5,861	0	3,717	0	-2,144	3,717
ANALYTICAL FACILITY	BLDG	50,852	27,928	0	0	-50,852	-27,928	0
ANALYTICAL FACILITY	OTHER	0	48,804	0	0	0	-48,804	0
SWITCHGEAR BUILDING	BLDG	7,435	2,466	7,435	2,466	0	0	1,486
SWITCHGEAR BUILDING	OTHER	0	13,165	0	13,165	0	0	13,165
COOLING TOWER		0	8,702	0	8,702	0	0	8,702
SHIPPING AND RECEIVING	BLDG	12,589	3,153	0	0	-12,589	-3,153	0
WAREHOUSES	BLDG	60,557	10,836	30,279	7,740	-30,278	-3,096	2,873
WAREHOUSES	OTHER	0	483	0	242	0	-241	242
FABRICATION AND ASSEMBLY SHOP	BLDG	21,628	8,141	21,628	8,141	0	0	6,542
FABRICATION AND ASSEMBLY SHOP	OTHER	0	2,030	0	2,030	0	0	2,030
TWRS TREATMENT COMPLEX SITE								
UNIT SUBSTATIONS		0	25,919	0	25,919	0	0	25,919
FEED LINE AND SWITCHYARD		0	13,285	0	13,285	0	0	13,285
MECHANICAL UTILITIES		0	21,030	0	8,698	0	-12,332	8,698
ELECTRICAL DISTRIBUTION		0	13,292	0	5,497	0	-7,795	5,497
SITE PRIP		0	6,939	0	6,158	0	-781	6,158
ROADS		0	995	0	1,867	0	872	1,867
RAIL LINE		0	2,744	0	294	0	-2,450	294
FINAL SITE WORK		0	3,391	0	3,176	0	-215	3,176
LIGHTING		0	433	0	385	0	-48	385
FENCING		0	560	0	353	0	-207	353
FEED TRANSFER LINES		0	7,470	0	6,640	0	-830	6,640
ENGINEERING FOR HLW MELTER CONVERSION								
TOTAL PROJECT			1,920,377		1,534,076		-386,301	1,447,946

0

APPENDIX E

MELTER CONVERSION ESTIMATES

DATA NOT AVAILABLE FOR ATTACHMENT AT THIS TIME.

This page intentionally left blank.

APPENDIX F

ALTERNATIVE FUNDING PROFILES

Life-cycle costs are derived from the design media generated for the SPF as shown in Figure F-1. Capital and expense costs for the life of the mission are derived from the Process Flow Diagram (PFD) and the related mass balance run on ASPEN software. These provide a basis for the process equipment list, design layouts, and site layouts.

Capital costs were estimated by Fluor Daniel, Inc. for process equipment, facility, and the site/infrastructure elements. The expense costs were developed by WHC from specific elements of the design media as depicted on Figure F-1. Thus, the life-cycle costs are directly traceable to specific elements of the design included in this document.

The ancillary areas and structures required to support the operation of the SPF are collectively referred to as "support and infrastructure" and are arranged with respect to the SPF in a site layout.

The support and infrastructure functions associated with the TWRS processing flowsheet have been systematically identified and documented in WHC-SD-W378-ES-002 (draft), "Facility Design Philosophy: TWRS Process Support and Infrastructure Definition". Utilities and structures have been mapped to the TWRS functional block diagram for "Remediate Tank Waste" in order to ensure a complete identification of processing support and infrastructure. Subsequently, each support function was assessed for location and process constraints. Specifically, on the bases of safety and operational considerations, it was determined whether support functions should be close coupled with the main processing facility or could otherwise be placed some distance away. It was also determined whether the function could be shared between pretreatment and vitrification or must otherwise be dedicated to each. Finally, opportunities for cost savings and efficiencies were considered through grouping or collocating functions in common structures.

Table F-1 provides the ADS guidance for fiscal year 1996 as well as the target funding and planning budgets for the April 10, 1995 budget submittal.

Table F-2 provides the funding profile for SPF.

Table F-3 provides the staff levels for the SPF separations and LLW vitrification. Table F-4 provides the staff levels for the SPF HLW vitrification.

Table F-5 provides the expense costs for chemicals, utilities, equipment replacement, and containers and vaults.

Figure F-1. Basis for Life-Cycle Cost Estimates.

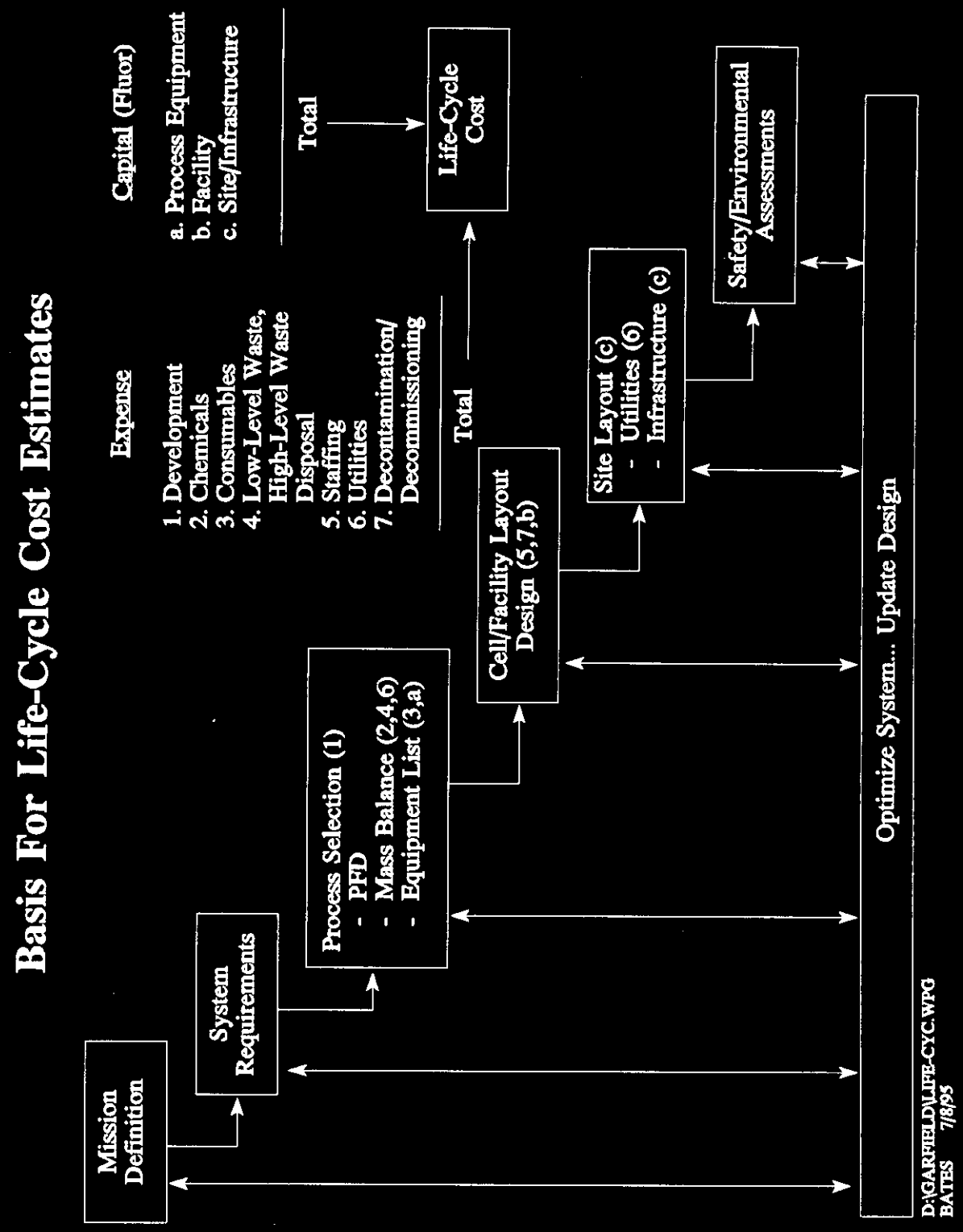

Table F-1. ADS Guidance for Fiscal Year 1996. (Sheet 1 of 2)

		1996	1997	1998	1999	2000	2001	Total
Program Management	Target	39,300	31,000	25,000	25,000	24,000	24,000	168,300
	Planning	47,201	43,752	46,815	46,086	47,089	47,026	277,969
	Guidance	34,000	25,000	25,000	25,000	24,000	24,000	157,000
Operations and Maintenance	Target	137,145	113,423	100,500	92,500	83,500	80,500	607,568
	Planning	149,306	144,320	155,598	158,498	156,044	166,164	929,930
	Guidance	118,100	113,423	106,500	102,500	93,500	90,500	624,523
Waste Tank Safety	Target	54,351	50,802	55,000	45,000	30,000	20,000	255,153
	Planning	54,351	50,802	55,000	45,000	30,000	20,000	255,153
	Guidance	54,351	48,500	47,600	45,000	30,000	20,000	245,451
Tank Farm Upgrades	Target	23,623	22,076	11,095	12,000	10,000	8,000	86,794
	Planning	29,444	37,103	22,567	22,927	18,172	15,618	145,831
	Guidance	21,582	14,164	12,095	12,000	10,000	8,000	77,841
Project W-038	Target	2,712	594	0	0	0	0	3,306
	Planning	2,950	594	0	0	0	0	3,544
	Guidance	2,712	594	0	0	0	0	3,306
Project W-058	Target	20,704	4,700	2,660	0	0	0	28,064
	Planning	21,950	4,700	2,660	0	0	0	29,310
	Guidance	20,704	9,200	2,660	0	0	0	32,564
Project W-314	Target	14,975	14,700	22,800	67,200	102,000	136,000	357,675
	Planning	14,975	25,700	59,614	136,222	225,363	210,810	672,684
	Guidance	14,975	14,700	32,800	77,200	112,000	146,000	397,675
Project W-028	Target	2,610	1,243	245	0	0	0	4,098
	Planning	2,570	1,243	245	0	0	0	4,058
	Guidance	2,610	2,243	245	0	0	0	5,098
Project W-236A	Target	0	0	0	0	0	0	0
	Planning	103,490	113,431	73,649	940	0	0	291,510
	Guidance	0	0	0	0	0	0	0
Total	Target	256,120	207,538	192,300	216,700	225,500	244,500	1,342,658
	Planning	379,036	377,893	369,333	363,587	429,579	412,592	2,332,020
	Guidance	235,034	202,824	201,900	236,700	245,500	264,500	1,386,458
Characterization	Target	77,100	54,174	45,000	35,000	30,000	15,000	256,274
	Planning	107,350	107,224	87,548	43,200	0	0	345,322
	Guidance	77,000	77,000	62,510	50,000	40,000	25,000	331,510
Storage Total	Target	333,220	261,712	237,300	251,700	255,500	259,500	1,598,932
	Planning	486,386	485,117	456,881	406,787	429,579	412,592	2,677,342
	Guidance	312,034	279,824	264,410	286,700	285,500	289,500	1,717,968
Waste Retrieval	Target	11,832	30,800	18,150	21,500	24,600	24,500	131,382
	Planning	44,612	36,184	72,673	67,110	108,725	132,906	462,210
	Guidance	11,832	21,346	21,150	54,380	69,000	68,500	246,208
W-151	Target	500	0	0	0	0	0	500
	Planning	500	0	0	0	0	0	500
	Guidance	500	0	0	0	0	0	500
W-211	Target	13,680	13,200	15,200	13,000	11,900	12,800	79,780
	Planning	13,680	21,860	21,270	24,220	25,750	25,730	132,510
	Guidance	13,680	13,200	15,200	13,000	11,900	12,800	79,780
W-320	Target	12,733	200	0	0	0	0	12,933
	Planning	12,733	200	0	0	0	0	12,933
	Guidance	18,733	200	0	0	0	0	18,933
Retreival Total	Target	38,745	44,200	33,350	34,500	36,500	37,300	224,595
	Planning	71,525	58,244	93,943	91,330	134,475	158,636	608,153
	Guidance	44,745	34,746	36,350	67,380	80,900	81,300	345,421
Pretreatment	Target	18,054	10,000	5,940	9,600	10,000	10,000	63,594
	Planning	22,898	25,408	53,021	50,591	40,491	64,974	257,383
	Guidance	2,400	2,400	2,400	2,400	2,400	2,400	14,400

Table F-1. ADS Guidance for Fiscal Year 1996. (Sheet 2 of 2)

		1996	1997	1998	1999	2000	2001	Total
Initial Pretreatment Module	Target	24,317	15,000	11,870	28,700	20,000	15,000	114,887
	Planning	63,044	45,332	45,078	122,549	211,748	170,954	658,705
	Guidance	0	0	0	0	0	0	0
Low Level	Target	39,430	28,030	27,700	44,980	57,000	61,200	258,340
	Planning	39,430	30,841	61,988	67,500	80,539	91,100	371,398
	Guidance	15,400	13,030	13,000	13,000	13,000	13,000	80,430
Low Level Vitrification Plant	Target	0	4,970	0	0	0	0	4,970
	Planning	0	25,706	177,099	301,672	342,084	317,146	1,163,707
	Guidance	0	0	0	0	0	0	0
High Level Waste	Target	11,434	8,000	4,740	4,740	7,600	8,000	44,514
	Planning	19,191	26,920	35,864	55,485	109,479	187,808	434,747
	Guidance	6,100	5,000	4,740	4,740	4,740	4,740	30,060
Disposal Total	Target	131,980	110,200	83,600	122,520	131,100	131,500	710,900
	Planning	216,088	212,451	466,993	689,127	918,816	990,618	3,494,093
	Guidance	68,645	55,176	56,490	87,520	101,040	101,440	470,311
TWRS Total	Target	504,500	402,912	345,900	399,220	410,600	415,000	2,478,132
	Planning	749,675	741,320	970,689	1,142,000	1,395,484	1,450,236	6,449,404
	Guidance	414,679	360,000	345,900	399,220	410,540	414,940	2,345,279

Figure F-2. Alternative Funding Profiles.

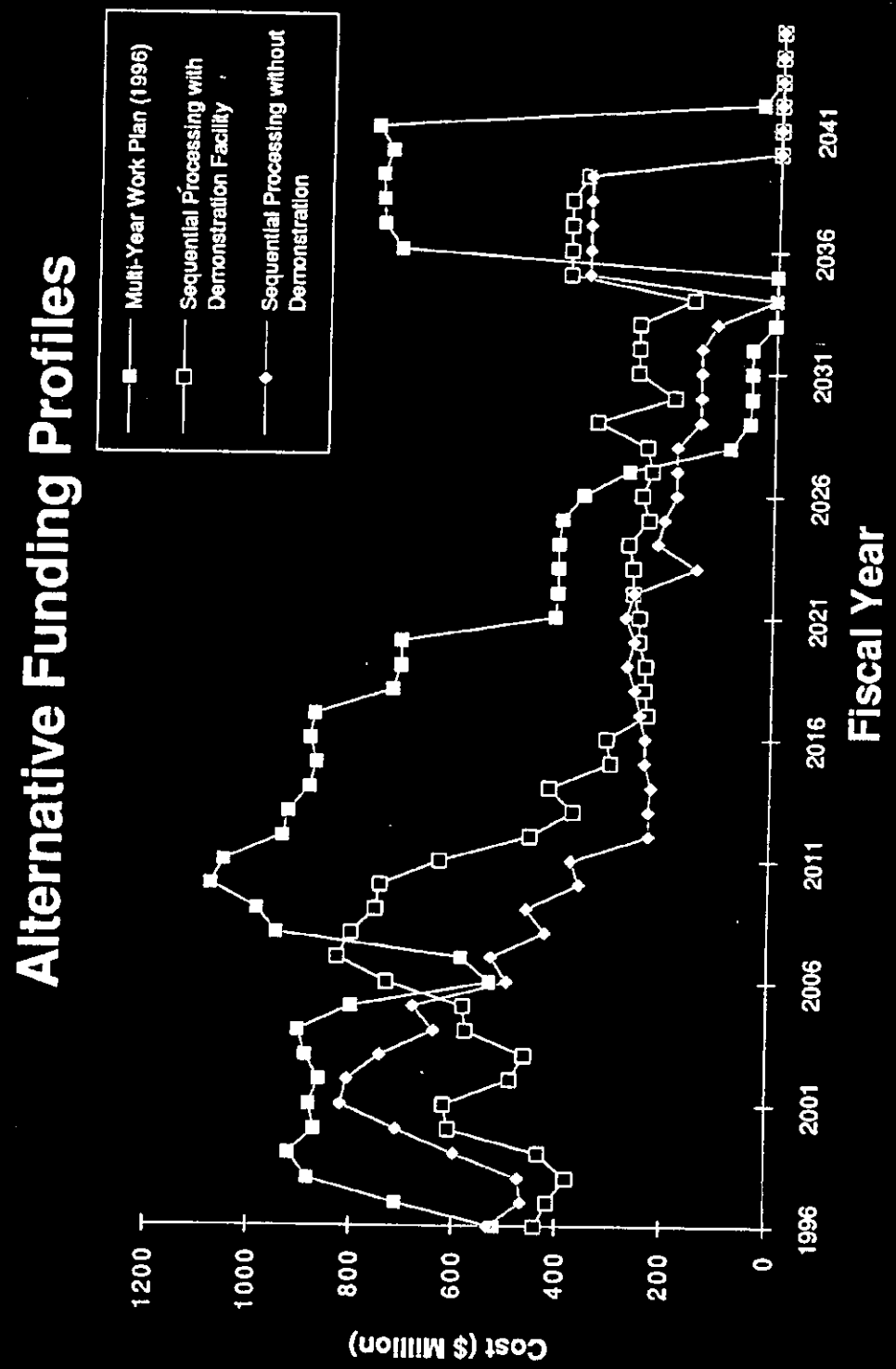

Table F-2. Funding Profile for SPF. (Sheet 1 of 6)

Multi-Year Work Plan	1996	1997	1998	1999	2000	2001	2002	2003	2004	2005
Program Management	43	34	32	30	31	31	31	31	31	31
TWRS Plant Operation and Maintenance	174	167	147	190	208	244	177	176	175	175
Characterization	78	72	63	52	41	27	77	77	77	0
Tank Safety	53	49	47	19	14	8	0	0	0	0
Base TWRS Program	304	287	257	261	263	278	254	253	253	175
Waste Retrieval	44	28	29	46	65	53	69	75	92	90

Process Facility with Demo	1996	1997	1998	1999	2000	2001	2002	2003	2004	2005
Waste Retrieval	44	28	29	46	65	53	69	75	121	133
Facility Cost	48	68	63	96	252	257	137	104	173	245
Program Management	43	34	32	30	31	31	31	31	31	31
Operations and Maintenance	174	167	147	190	208	244	177	176	175	175
Characterization	78	72	63	52	41	27	77	77	77	0
Tank Safety	53	49	47	19	14	8	0	0	0	0
TWRS Cost	440	416	381	434	610	619	490	463	578	584
Discounted TWRS Total	440	393	339	365	483	463	346	318	386	379
Discounted Facility Cost	48	64	56	81	199	192	97	72	116	159

Process Facility without Demo	1996	1997	1998	1999	2000	2001	2002	2003	2004	2005
Waste Retrieval	44	28	29	70	101	114	179	247	282	353
Escalated Facility Cost	140	117	154	237	318	396	345	215	75	123
Program Management	43	34	32	30	31	31	31	31	31	31
Operations and Maintenance	174	167	147	190	208	244	177	176	175	175
Characterization	78	72	63	52	41	27	77	77	77	0
Tank Safety	53	49	47	19	14	8	0	0	0	0
TWRS Cost	532	466	472	598	712	819	808	746	641	682
Discounted TWRS Total Cost	532	439	420	503	564	613	570	512	428	443
Discounted Facility Cost	140	110	138	199	252	296	243	147	50	80

Table F-2. Funding Profile for SPF. (Sheet 2 of 6)

Multi-Year Work Plan	2006	2007	2008	2009	2010	2011	2012	2013	2014	2015
Program Management	31	31	30	30	27	27	27	27	27	27
TWRS Plant Operation and Maintenance	0	0	0	0	0	0	0	0	0	0
Characterization	0	0	0	0	0	0	0	0	0	0
Tank Safety	0	0	0	0	0	0	0	0	0	0
Base TWRS Program	0	0	0	0	0	0	0	0	0	0
Waste Retrieval	124	124	91	90	90	100	15	15	14	15

Process Facility with Demo	2006	2007	2008	2009	2010	2011	2012	2013	2014	2015
Waste Retrieval	197	256	297	318	406	360	313	235	284	168
Facility Cost	332	369	302	235	141	72	118	114	112	112
Program Management	31	31	30	30	27	27	27	27	27	27
Operations and Maintenance	175	175	175	175	175	175	0	0	0	0
Characterization	0	0	0	0	0	0	0	0	0	0
Tank Safety	0	0	0	0	0	0	0	0	0	0
TWRS Cost	734	830	804	758	750	634	459	377	423	306
Discounted TWRS Total	464	510	481	441	424	349	246	196	214	151
Discounted Facility Cost	210	227	181	136	80	39	63	59	57	55

Process Facility without Demo	2006	2007	2008	2009	2010	2011	2012	2013	2014	2015
Waste Retrieval	341	372	274	315	217	234	85	90	89	101
Escalated Facility Cost	128	128	124	119	118	118	118	114	112	112
Program Management	31	31	30	30	27	27	27	27	27	27
Operations and Maintenance	0	0	0	0	0	0	0	0	0	0
Characterization	0	0	0	0	0	0	0	0	0	0
Tank Safety	0	0	0	0	0	0	0	0	0	0
TWRS Cost	499	530	427	464	363	379	231	232	228	240
Discounted TWRS Total Cost	315	326	255	270	205	209	124	121	116	118
Discounted Facility Cost	81	78	74	69	67	65	63	59	57	55

Table F-2. Funding Profile for SPF. (Sheet 3 of 6)

Multi-Year Work Plan	2016	2017	2018	2019	2020	2021	2022	2023	2024	2025
Program Management	27	26	26	25	25	25	22	22	23	24
TWRS Plant Operation and Maintenance	0	0	0	0	0	0	0	0	0	0
Characterization	0	0	0	0	0	0	0	0	0	0
Tank Safety	0	0	0	0	0	0	0	0	0	0
Base TWRS Program	0	0	0	0	0	0	0	0	0	0
Waste Retrieval	15	15	15	15	15	15	14	14	14	6

Process Facility with Demo	2016	2017	2018	2019	2020	2021	2022	2023	2024	2025
Waste Retrieval	176	99	105	105	119	119	132	132	136	100
Facility Cost	112	112	111	111	111	111	113	115	119	117
Program Management	27	26	26	25	25	25	22	22	23	24
Operations and Maintenance	0	0	0	0	0	0	0	0	0	0
Characterization	0	0	0	0	0	0	0	0	0	0
Tank Safety	0	0	0	0	0	0	0	0	0	0
TWRS Cost	315	237	243	242	255	255	267	269	278	240
Discounted TWRS Total	151	110	110	107	110	107	109	106	107	90
Discounted Facility Cost	53	52	51	49	48	47	46	45	46	44

Process Facility without Demo	2016	2017	2018	2019	2020	2021	2022	2023	2024	2025
Waste Retrieval	102	113	113	117	93	99	74	67	43	30
Escalated Facility Cost	112	112	123	135	146	158	169	58	157	157
Program Management	27	26	26	25	25	25	22	22	23	24
Operations and Maintenance	0	0	0	0	0	0	0	0	0	0
Characterization	0	0	0	0	0	0	0	0	0	0
Tank Safety	0	0	0	0	0	0	0	0	0	0
TWRS Cost	240	251	262	277	264	282	266	147	223	211
Discounted TWRS Total Cost	115	117	119	122	113	118	108	58	86	79
Discounted Facility Cost	53	52	56	59	63	66	69	23	60	59

Table F-2. Funding Profile for SPF. (Sheet 4 of 6)

Multi-Year Work Plan	2026	2027	2028	2029	2030	2031	2032	2033	2034	2035
Program Management	24	24	24	3	3	3	2	2	2	2
TWRS Plant Operation and Maintenance	0	0	0	0	0	0	0	0	0	0
Characterization	0	0	0	0	0	0	0	0	0	0
Tank Safety	0	0	0	0	0	0	0	0	0	0
Base TWRS Program	0	0	0	0	0	0	0	0	0	0
Waste Retrieval	6	6	6	0	0	0	0	0	0	0

Process Facility with Demo	2026	2027	2028	2029	2030	2031	2032	2033	2034	2035
Waste Retrieval	108	79	70	35	29	0	0	0	0	0
Facility Cost	122	132	152	304	162	262	262	262	157	396
Program Management	24	24	24	3	3	3	2	2	2	2
Operations and Maintenance	0	0	0	0	0	0	0	0	0	0
Characterization	0	0	0	0	0	0	0	0	0	0
Tank Safety	0	0	0	0	0	0	0	0	0	0
TWRS Cost	254	235	246	342	194	265	264	264	159	398
Discounted TWRS Total	92	83	85	115	63	84	81	79	46	113
Discounted Facility Cost	44	47	52	102	53	83	81	78	46	112

Process Facility without Demo	2026	2027	2028	2029	2030	2031	2032	2033	2034	2035
Waste Retrieval	6	6	6	0	0	0	0	0	0	0
Escalated Facility Cost	157	157	157	141	141	141	141	112	0	360
Program Management	24	24	24	3	3	3	2	2	2	2
Operations and Maintenance	0	0	0	0	0	0	0	0	0	0
Characterization	0	0	0	0	0	0	0	0	0	0
Tank Safety	0	0	0	0	0	0	0	0	0	0
TWRS Cost	187	187	187	144	144	144	143	114	2	362
Discounted TWRS Total Cost	68	66	64	48	47	46	44	34	1	103
Discounted Facility Cost	57	56	54	47	46	45	43	33	0	102

Table F-2. Funding Profile for SPF. (Sheet 5 of 6)

Multi-Year Work Plan	2036	2037	2038	2039	2040	2041	2042	2043	2044	2045
Program Management	2	2	2	2	0	0	0	0	0	0
TWRS Plant Operation and Maintenance	0	0	0	0	0	0	0	0	0	0
Characterization	0	0	0	0	0	0	0	0	0	0
Tank Safety	0	0	0	0	0	0	0	0	0	0
Base TWRS Program	0	0	0	0	0	0	0	0	0	0
Waste Retrieval	0	0	0	0	0	0	0	0	0	0

Process Facility with Demo	2036	2037	2038	2039	2040	2041	2042	2043	2044	2045
Waste Retrieval	0	0	0	0	0	0	0	0	0	0
Facility Cost	396	396	396	368	0	0	0	0	0	0
Program Management	2	2	2	2	0	0	0	0	0	0
Operations and Maintenance	0	0	0	0	0	0	0	0	0	0
Characterization	0	0	0	0	0	0	0	0	0	0
Tank Safety	0	0	0	0	0	0	0	0	0	0
TWRS Cost	398	398	398	369	0	0	0	0	0	0
Discounted TWRS Total	110	107	104	94	0	0	0	0	0	0
Discounted Facility Cost	109	106	103	93	0	0	0	0	0	0

Process Facility without Demo	2036	2037	2038	2039	2040	2041	2042	2043	2044	2045
Waste Retrieval	0	0	0	0	0	0	0	0	0	0
Escalated Facility Cost	360	360	360	360	0	0	0	0	0	0
Program Management	2	2	2	2	0	0	0	0	0	0
Operations and Maintenance	0	0	0	0	0	0	0	0	0	0
Characterization	0	0	0	0	0	0	0	0	0	0
Tank Safety	0	0	0	0	0	0	0	0	0	0
TWRS Cost	362	362	362	362	0	0	0	0	0	0
Discounted TWRS Total Cost	100	97	95	92	0	0	0	0	0	0
Discounted Facility Cost	99	97	94	91	0	0	0	0	0	0

Table F-2. Funding Profile for SPF. (Sheet 6 of 6)

Multi-Year Work Plan	2046	2047	2048	2049	2050	Total
Program Management	0	0	0	0	0	951
TWRS Plant Operation and Maintenance	0	0	0	0	0	1,833
Characterization	0	0	0	0	0	564
Tank Safety	0	0	0	0	0	189
Base TWRS Program	0	0	0	0	0	2,586
Waste Retrieval	0	0	0	0	0	1,430

Process Facility with Demo	2046	2047	2048	2049	2050	Total
Waste Retrieval	0	0	0	0	0	5,045
Facility Cost	0	0	0	0	0	8,251
Program Management	0	0	0	0	0	951
Operations and Maintenance	0	0	0	0	0	2,883
Characterization	0	0	0	0	0	564
Tank Safety	0	0	0	0	0	189
TWRS Cost	0	0	0	0	0	17,882
Discounted TWRS Total	0	0	0	0	0	9,750
Discounted Facility Cost	0	0	0	0	0	3,782

Process Facility without Demo	2046	2047	2048	2049	2050	Total
Waste Retrieval	0	0	0	0	0	4,440
Escalated Facility Cost	0	0	0	0	0	7,583
Program Management	0	0	0	0	0	951
Operations and Maintenance	0	0	0	0	0	1,833
Characterization	0	0	0	0	0	564
Tank Safety	0	0	0	0	0	189
TWRS Cost	0	0	0	0	0	15,560
Discounted TWRS Total Cost	0	0	0	0	0	9,022
Discounted Facility Cost	0	0	0	0	0	3,749

Table F-3. Staff Levels for the SPF Separations and Low-Level Waste Vitrification. (Sheet 1 of 3)

Sequential Processing Facility Separations and LLW Staff

Title	SHIFT STAFFING																					Total
	Day Shift			A Shift			B Shift			C Shift			D Shift			Training Shift			Sub Total			
POSITION	E	NE	BU	E	NE	BU	E	NE	BU	E	NE	BU	E	NE	BU	E	NE	BU	E	NE	BU	
BUILDING SUPPORT																						
Plant Management																						
Plant Manager	1																		1			1
Administrative Assisstant	1																		1			1
Technical/Budget Analysts	2																		2			2
Clerical	1	2																	1	2		3
Job Control																						
Managers	2																		2			2
Clerical		4																		4		4
Facility Administrator	3																		3			3
Job Control Specialists	4																		4			4
Material Specialists	2																		2			2
Schedulers	6																		6			6
Planners	6																		6			6
Crane Planners	2																		2			2
Plant Engineering																						
Managers	1																		1			1
Clerical		2																		2		2
Designers / Drafters		2																		2		2
Plant Engineers	14																		14			14
Analytical Laboratory																						
Managers / Supervisors	1			1			1			1			1			1			6			6
Clerical		2																		2		2
Chemists	3			1			1			1			1			1			8			8
Chemical Technicians			4			5			5			5			5			5			29	29
Standards Laboratory																						
Managers	1																		1			1
Clerical		1																		1		1
Chemists	2																		2			2
Chemical Technicians			2																		2	2
Radiation Protection																						
Managers	1																		1			1
Clerical		1																		1		1
Health Physics Technologists			10																		10	10
Facility Services																						
Managers/Supervisors	1																		1			1
Clerical		1																		1		1
Process Operators			10			2			2			2			2			2			20	20
Crane Operators			2			2			2			2			2			2			12	12
Power Operators			3			2			2			2			2			2			13	13
Driver			2																		2	2
Computer Support																						
Managers	1																		1			1
Clerical		1																		1		1
System Admin. / Analyst	3																		3			3
Document Control																						
Managers	1																		1			1
Clerical		2																		2		2
Document Control Specialist	4																		4			4
Technical Editor	2																		2			2
Program Office																						
Program Managers	1																		1			1
Clerical		1																		1		1
Program Scheduler	1																		1			1
Activity Engineer	2																		2			2
Subtotal	69	19	33	2		11	2		11	2		11	2		11	2		11	79	19	88	186

Table F-3. Staff Levels for the SPF Separations and Low-Level Waste Vitrification. (Sheet 2 of 3)

Title	SHIFT STAFFING																					Total
	Day Shift			A Shift			B Shift			C Shift			D Shift			Training Shift			Sub Total			
POSITION	E	NE	BU	E	NE	BU	E	NE	BU	E	NE	BU	E	NE	BU	E	NE	BU	E	NE	BU	
ENGINEERING & SUPPORT																						
Process & Technology Engineer																						
Managers	3																		3			3
Clerical		3																		3		3
Shift Engineers	3			1			1			1			1			1			8			8
Process Engineers	11																		11			11
Technicians		2																		2		2
Surveillance & Testing																						
Manager	1																		1			1
Clerical		1																		1		1
Surveillance & Testing Engrs.	3																		3			3
Quality Assurance & Control																						
Manager	1																		1			1
Clerical		1																		1		1
Quality Control Inspectors	3																		3			3
Quality Assurance Engineer	2																		2			2
Safety Engineering																						
Managers	1																		1			1
Clerical		1																		1		1
Emergency Prepareness Specialist	1																		1			1
Radiation Engineers	2																		2			2
Nuclear Engineers	2																		2			2
Industrial Safety Engineers	1																		1			1
Nuclear Materials Administration																						
Managers	1																		1			1
Clerical		2																		2		2
Specialists	2																		2			2
Training																						
Managers	1																		1			1
Clerical		2																		2		2
Trainers	5																		5			5
Subtotal	43	12		1			1			1			1			1			48	12		60
PROCESS STAFF																						
Operations Management																						
Operations Manager	1																		1			1
Shift Manager	2			1			1			1			1			1			7			7
Shift Support Manager	2			2			2			2			2			2			12			12
Operations Plant Engineers	6																		6			6
Clerical		2																		2		2
Operators																						
Receipt and Sludge Washing			1			2			2			2			2			2			11	11
Cesium Ion Exchange			1			2			2			2			2			2			11	11
Effluents			1			2			2			2			2			2			11	11
Evaporators			1			2			2			2			2			2			11	11
LLW Melter			2			2			2			2			2			2			12	12
Product Handling			2			1			1			1			1			1			7	7
Hazardous Material Control																						
Manager	1																		1			1
Clerical		2																		2		2
Technicians		3																		3		3
Engineers	6																		6			6
Environmental Control																						
Manager	1																		1			1
Clerical		1																		1		1
Technicians		2																		2		2
Engineers	5																		5			5
Radiation Protection																						
Managers / Supervisors	2			1			1			1			1			1			7			7
Clerical		1																		1		1
Health Physics Technologists						4			4			4			4			4			20	20
Subtotal	26	11	8	4		15	4		15	4		15	4		15	4		15	46	11	83	140

Table F-3. Staff Levels for the SPF Separations and Low-Level Waste Vitrification. (Sheet 3 of 3)

Sequential Processing Facility Separations and LLW Staff

Title	SHIFT STAFFING																					Total
	Day Shift			A Shift			B Shift			C Shift			D Shift			Training Shift			Sub Total			
POSITION	E	NE	BU	E	NE	BU	E	NE	BU	E	NE	BU	E	NE	BU	E	NE	BU	E	NE	BU	
MAINTENANCE																						
Manager	1																		1			1
Clerical		1																		1		1
Maintenance Engineer	3																		3			3
Training Coordinator	1																		1			1
Mechanical Maintenance																						
Managers/Supervisors	1			1			1			1			1			1			6			6
Clerical		1																		1		1
Person in Charge	1																		1			1
Mill Wrights			4			2			2			2			2			2			14	14
Pipe Fitters			4			2			2			2			2			2			14	14
Insulators			2																		2	2
Riggers			2			2			2			2			2			2			12	12
Drivers			1			2			2			2			2			2			11	11
Welders			2																		2	2
Carpenters			2																		2	2
Painters			2																		2	2
Sign Writer			1																		1	1
I&E Maintenance																						
Managers/Supervisors	1																		1			1
Clerical		1																		1		1
Person in Charge	1			1			1			1			1			1			6			6
I&E Technicians			4			2			2			2			2			2			14	14
Electricians			2			2			2			2			2			2			12	12
Manipulator Maintenance																						
Managers/Supervisors	1																		1			1
Clerical		1																		1		1
Person in Charge	1			1			1			1			1			1			6			6
Mill Wrights			2			2			2			2			2			2			12	12
I & E Technicians			2			2			2			2			2			2			12	12
Subtotal	11	4	30	3		16	3		16	3		16	3		16	3		16	26	4	110	140
TOTAL	149	46	71	10		42	10		42	10		42	10		42	10		42	199	46	281	526

Table F-4. Staff Levels for the SPF HLW Vitrification. (Sheet 1 of 3)

Title	SHIFT STAFFING																					Total
	Day Shift			A Shift			B Shift			C Shift			D Shift			Training Shift			Sub Total			
POSITION	E	NE	BU	E	NE	BU	E	NE	BU	E	NE	BU	E	NE	BU	E	NE	BU	E	NE	BU	
BUILDING SUPPORT																						
Plant Management																						
Plant Manager	1																		1			1
Administrative Assistant	1																		1			1
Technical/Budget Analysts	2																		2			2
Clerical	1	2																	1	2		3
Job Control																						
Managers	2																		2			2
Clerical		4																		4		4
Facility Administrator	3																		3			3
Job Control Specialists	4																		4			4
Material Specialists	2																		2			2
Schedulers	4																		4			4
Planners	4																		4			4
Crane Planners	2																		2			2
Plant Engineering																						
Managers	1																		1			1
Clerical		2																		2		2
Designers / Drafters		2																		2		2
Plant Engineers	8																		8			8
Analytical Laboratory																						
Managers / Supervisors	1			1			1			1			1			1			6			6
Clerical		2																		2		2
Chemists	2			1			1			1			1			1			7			7
Chemical Technicians			2			5			5			5			5			5			27	27
Standards Laboratory																						
Managers	1																		1			1
Clerical		1																		1		1
Chemists	2																		2			2
Chemical Technicians			2																		2	2
Radiation Protection																						
Managers	1																		1			1
Clerical		1																		1		1
Health Physics Technologists			10																		10	10
Facility Services																						
Managers/Supervisors	1																		1			1
Clerical		1																		1		1
Process Operators			8			2			2			2			2			2			18	18
Crane Operators			1			1			1			1			1			1			6	6
Power Operators			2			1			1			1			1			1			7	7
Driver			2																		2	2
Computer Support																						
Managers	1																		1			1
Clerical		1																		1		1
System Admin. / Analyst	2																		2			2
Document Control																						
Managers	1																		1			1
Clerical		2																		2		2
Document Control Specialist	4																		4			4
Technical Editor	2																		2			2
Program Office																						
Program Managers	1																		1			1
Clerical		1																		1		1
Program Scheduler	1																		1			1
Activity Engineer	2																		2			2
Subtotal	57	19	27	2		9	2		9	2		9	2		9	2		9	67	19	72	158

Table F-4. Staff Levels for the SPF HLW Vitrification. (Sheet 2 of 3)

Title	SHIFT STAFFING																					
	Day Shift			A Shift			B Shift			C Shift			D Shift			Training Shift			Sub Total			Total
POSITION	E	NE	BU	E	NE	BU	E	NE	BU	E	NE	BU	E	NE	BU	E	NE	BU	E	NE	BU	
ENGINEERING & SUPPORT																						
Process & Technology Engineer																						
Managers	3																		3			3
Clerical		2																		2		2
Shift Engineers	2			1			1			1			1			1			7			7
Process Engineers	8																		8			8
Technicians		2																		2		2
Surveillance & Testing																						
Manager	1																		1			1
Clerical		1																		1		1
Surveillance & Testing Engrs.	4																		4			4
Quality Assurance & Control																						
Manager	1																		1			1
Clerical		1																		1		1
Quality Control Inspectors	3																		3			3
Quality Assurance Engineer	2																		2			2
Safety Engineering																						
Managers	1																		1			1
Clerical		1																		1		1
Emergency Preparaness Specialist	1																		1			1
Radiation Engineers	3																		3			3
Nuclear Engineers	3																		3			3
Industrial Safety Engineers	1																		1			1
Nuclear Materials Administration																						
Managers	1																		1			1
Clerical		2																		2		2
Specialists	3																		3			3
Training																						
Managers	1																		1			1
Clerical		2																		2		2
Trainers	4																		4			4
Subtotal	42	11		1			1			1			1			1			47	11		58
PROCESS STAFF																						
Operations Management																						
Operations Manager	1																		1			1
Shift Manager	1			1			1			1			1			1			6			6
Shift Support Manager	1			2			2			2			2			2			11			11
Operations Plant Engineers	5																		5			5
Clerical		2			1			1			1			1			1			7		7
Operators																						
Receipt			1			1			1			1			1			1			6	6
Cesium Ion Exchange																						
Effluents			1			1			1			1			1			1			6	6
Evaporators			1			1			1			1			1			1			6	6
LLW Melter																						
HLW Melter			2			2			2			2			2			2			12	12
Product Handling			2			1			1			1			1			1			7	7
Hazardous Material Control																						
Manager	1																		1			1
Clerical		2																		2		2
Technicians		2																		2		2
Engineers	3																		3			3
Environmental Control																						
Manager	1																		1			1
Clerical		1																		1		1
Technicians		2																		2		2
Engineers	4																		4			4
Radiation Protection																						
Managers / Supervisors	2			1			1			1			1			1			7			7
Clerical		1																		1		1
Health Physics Technologists						5			5			5			5			5			25	25
Subtotal	19	10	7	4	1	11	4	1	11	4	1	11	4	1	11	4	1	11	39	15	62	116

Table F-4. Staff Levels for the SPF HLW Vitrification. (Sheet 3 of 3)

Sequential Processing Facility HLW Staff

Title	SHIFT STAFFING																					Total
	Day Shift			A Shift			B Shift			C Shift			D Shift			Training Shift			Sub Total			
POSITION	E	NE	BU	E	NE	BU	E	NE	BU	E	NE	BU	E	NE	BU	E	NE	BU	E	NE	BU	
MAINTENANCE																						
Manager	1																		1			1
Clerical		1																		1		1
Maintenance Engr.	3																		3			3
Training Coordinator	1																		1			1
Mechanical Maintenance																						
Managers/Supervisors	1			1			1			1			1			1			6			6
Clerical		1																		1		1
Person in Charge	1																		1			1
Mill Wrights			2			2			2			2			2			2			12	12
Pipe Fitters			2			2			2			2			2			2			12	12
Insulators			2																		2	2
Riggers			2			2			2			2			2			2			12	12
Drivers			1			2			2			2			2			2			11	11
Welders			2																		2	2
Carpenters			2																		2	2
Painters			2																		2	2
Sign Writer			1																		1	1
I&E Maintenance																						
Managers/Supervisors	1																		1			1
Clerical		2																		2		2
Person in Charge	1			1			1			1			1			1			6			6
I&E Technicians			4			2			2			2			2			2			14	14
Electricians			4			2			2			2			2			2			14	14
Manipulator Maintenance																						
Managers/Supervisors	1																		1			1
Clerical		1																		1		1
Person in Charge	1			1			1			1			1			1			6			6
Mill Wrights			2			2			2			2			2			2			12	12
I & E Technicians			2			2			2			2			2			2			12	12
Subtotal	11	5	28	3		16	3		16	3		16	3		16	3		16	26	5	108	139
TOTAL	129	45	62	10	1	36	10	1	36	10	1	36	10	1	36	10	1	36	179	50	242	471

Table F-5. Expense Costs.

			Separations and Low Level Waste			High Level Waste			Total Cost
Material	Unit	Unit Cost	Stream Number	Material	Cost	Stream Number	Material	Cost	
Frit	Megagram	$3,860	202	62	$239,320			$0	$239,320
Ion Exchnage	Cubic Meter	$11,000	269	1,430	$15,730,000			$0	$15,730,000
Cement	Megagram	$100	1124	1,680	$168,000				$168,000
Flyash	Megagram	$100	1123	1,680	$168,000				$168,000
Calcium Hydroxide	Megagram	$100	1127	5,460	$546,000				$546,000
NaNO2	Megagram	$210	38, 117, & 24	62	$13,083			$0	$13,083
Sulfur	Megagram	$370	446	134,990	$49,942,600			$0	$49,942,600
DCPD	Megagram	$150	449	3,566	$534,900			$0	$534,900
CPD	Megagram	$150	449	3,566	$534,900			$0	$534,900
Glycolic Acid	Megagram	$150		0	$0	315	5,690	$853,500	$853,500
NaOH	Megagram	$250	11, 19, 25, 48, 55, 109, 116, 231, 246, 247, 248, 451, 903, &1112	59,636	$14,909,000		0	$0	$14,909,000
									$0
									$0
									$0
									$0
HNO3	Megagram	$160	236, 238, 665, & 1101	48,670	$7,787,200	327, 347, & 611	0	$0	$7,787,200
									$0
NH3	Megagram	$350	654	2,410	$843,500		0	$0	$843,500
Decon Chemicals	Megagram	$401		2,114	$848,040		3,171	$1,272,060	$2,120,100
Solid Waste	Cubic Meter	$1,000	1126	5,720	$5,720,000	1126	1,000	$1,000,000	$6,720,000
Kerosene	Megagram	$150	649 & 408	57,710	$8,656,500		0	$0	$8,656,500
Process Water	Cubic Meter	$0.03		972,907	$29,187		697,000	$20,910	$50,097
SiO2	Megagram	$40	407	265,000	$10,600,000	314	10,900	$436,000	$11,036,000
Al2O3	Megagram	$500	407	15,200	$7,600,000	314	0	$0	$7,600,000
CaO	Megagram	$60	407	40,700	$2,442,000	314	0	$0	$2,442,000
B2O3	Megagram	$1,000			$0	314	1,730	$1,730,000	$1,730,000
Li2O	Megagram	$5,000			$0	314	494	$2,470,000	$2,470,000
					$127,312,230			$7,782,470	$135,094,700
					$7,072,902			$1,556,494	
Sanitary Water	Cubic Meter	$0.03		751,000.00	$22,530		286,000.00	$8,580	$31,110
Raw Water	Cubic Meter	$0.03		12,327,093	$369,813		923,000	$27,690	$397,503
Steam	Megagram	$5			$0			$0	$0
Electricity	Megawatt H	$30		5,900,000	$177,000,000		4,100,000	$123,000,000	$300,000,000
					$177,392,343			$123,036,270	$300,428,613
					$9,855,130			$24,607,254	
Equipment Replacemen	Allotment			9,000,000	$162,000,000		5,000,000	$25,000,000	$187,000,000
					$466,704,573			$155,818,740	
Support for Process					$25,928,032			$31,163,748	
Vauts/Pads					$98,458,273			$26,000,000	
Containers			441		$136,954,929	344		$226,570,892	
					$235,413,201			$252,570,892	
					$13,078,511			$50,514,176	
Total Consumables					$702,117,774			$408,389,632	$1,110,507,406
Annual Consumbables					$39,006,543			$81,677,926	

DISTRIBUTION SHEET

To	From	Page 1 of 1
Disposal Program	Process Design	Date 2/15/96
Project Title/Work Order		EDT No. 608994
Tank Waste Remediation System Optimized Processing Strategy, WHC-SD-WM-TI-694, Rev. 0		ECN No.

Name	MSIN	Text With All Attach.	Text Only	Attach./ Appendix Only	EDT/ECN Only
Central Files	A3-88	X			
DOE Public Reading Room	A1-65	X			
S. K. Baker	H5-49	X			
A. L. Boldt	H5-49	X			
K. D. Boomer	H5-49	X			
J. D. Galbraith	H5-49	X			
J. S. Garfield (10)	H5-49	X			
J. O. Honeyman	G3-21	X			
M. E. Johnson	H5-49	X			
E. J. Kosiancic	H5-61	X			
C. E. Leach	A2-34	X			
E. J. Slaathaug	H5-49	X			
J. P. Sloughter	R2-54	X			
T. L. Waldo	H5-49	X			
D. J. Washenfelder	H5-27	X			