DISTRIBUTION SHEET

To	From	Page 1 of 1
Distribution	TWRS Pretreatment Program	Date 05/08/95
Project Title/Work Order		EDT No. 612126
Cost Benefit and Risk Assessment for Selected Tank Waste Process Testing Alternatives		ECN No.

Name	MSIN	Text With All Attach.	Text Only	Attach./ Appendix Only	EDT/ECN Only
U.S. Department of Energy, Richland Operations Office					
P. T. Furlong	G3-20				X
R. A. Gilbert	S7-53				X
P. E. LaMont	S7-53				X
Westinghouse Hanford Company					
C. S. Ehrhardt	G3-20				X
J. S. Garfield	H5-49				X
J. O. Honeyman	S7-81				X
G. F. Howden	G3-20				X
R. D. Jensen	G3-21				X
G. A. Meyer	S4-54				X
R. J. Murkowski	G6-13				X
R. W. Powell	G3-21				X
G. W. Reddick	H5-49				X
Central Files (orig. + 2)	L8-04	X			
OSTI (2 copies)	L8-07	X			

RECEIVED
JUN 19 1995
OSTI

MASTER

A-6000-135 (01/93) WEF067

DISCLAIMER

Portions of this document may be illegible in electronic image products. Images are produced from the best available original document.

(5) sta. 4
MAY 22 1995

ENGINEERING DATA TRANSMITTAL

Page 1 of 1

1. EDT № 612126

2. To: (Receiving Organization) Pretreatment Program Office	3. From: (Originating Organization) Foster Wheeler Environmental Corporation	4. Related EDT No.: N/A
5. Proj./Prog./Dept./Div.: Pretreatment Program/TWRS	6. Cog. Engr.: K. A. Gasper	7. Purchase Order No.: N/A
8. Originator Remarks: TWRS initial release of Foster Wheeler final report, An assessment of cost benefit and risks associated with the technical baseline for the TWRS Disposal Program and three alternative testing and development strategies		9. Equip./Component No.: N/A
		10. System/Bldg./Facility: N/A
11. Receiver Remarks:		12. Major Assm. Dwg. No.: N/A
		13. Permit/Permit Application No.: N/A
		14. Required Response Date:

15. DATA TRANSMITTED

(A) Item No.	(B) Document/Drawing No.	(C) Sheet No.	(D) Rev. No.	(E) Title or Description of Data Transmitted	(F) Approval Designator	(G) Reason for Transmittal	(H) Originator Disposition	(I) Receiver Disposition
1	WHC-SD-WM-ES-337,		0	Cost Benefit and Risk Assessment For Selected Tank Waste Process Testing Alternatives	N/A	1	1	

16. KEY

Approval Designator (F)	Reason for Transmittal (G)		Disposition (H) & (I)	
E, S, Q, D or N/A (see WHC-CM-3-5, Sec.12.7)	1. Approval 2. Release 3. Information	4. Review 5. Post-Review 6. Dist. (Receipt Acknow. Required)	1. Approved 2. Approved w/comment 3. Disapproved w/comment	4. Reviewed no/comment 5. Reviewed w/comment 6. Receipt acknowledged

17. SIGNATURE/DISTRIBUTION (See Approval Designator for required signatures)

(G) Reason	(H) Disp.	(J) Name	(K) Signature	(L) Date	(M) MSIN	(J) Name	(K) Signature	(L) Date	(M) MSIN	(G) Reason	(H) Disp.
1	1	Cog.Eng.K. A. Gasper	KAGasper	5/18/95	G3-21						
1	1	Cog. Mgr.K. A. Gasper	KAGasper	5/18/95	G3-21						
		QA									
		Safety									
		Env.									

18.	19.	20.	21. DOE APPROVAL (if required)
K. A. Gasper KAGasper 5/18/95 Signature of EDT Originator Date	K. A. Gasper KAGasper 5/18/95 Authorized Representative for Receiving Organization Date	K. A. Gasper KAGasper 5/18/95 Cognizant Manager Date	Ctrl. No. [] Approved [] Approved w/comments [] Disapproved w/comments

BD-7400-172-1

INSTRUCTIONS FOR COMPLETION OF THE ENGINEERING DATA TRANSMITTAL

(USE BLACK INK OR TYPE)

BLOCK	TITLE	
(1)*	EDT	• Pre-assigned EDT number.
(2)	To: (Receiving Organization)	• Enter the individual's name, title of the organization, or entity (e.g., Distribution) that the EDT is being transmitted to.
(3)	From: (Originating Organization)	• Enter the title of the organization originating and transmitting the EDT.
(4)	Related EDT No.	• Enter EDT numbers which relate to the data being transmitted.
(5)*	Proj./Prog./Dept./Div.	• Enter the Project/Program/Department/Division title or Project/Program acronym or Project Number, Work Order Number or Organization Code.
(6)*	Cognizant Engineer	• Enter the name of the individual identified as being responsible for coordinating disposition of the EDT.
(7)	Purchase Order No.	• Enter related Purchase Order (P.O.) Number, if available.
(8)*	Originator Remarks	• Enter special or additional comments concerning transmittal, or "Key" retrieval words may be entered.
(9)	Equipment/Component No.	• Enter equipment/component number of affected item, if appropriate.
(10)	System/Bldg./Facility	• Enter applicable system, building or facility number, if appropriate.
(11)	Receiver Remarks	• Enter special or additional comments concerning transmittal.
(12)	Major Assm. Dwg. No.	• Enter applicable drawing number of major assembly, if appropriate.
(13)	Permit/Permit Application No.	• Enter applicable permit or permit application number, if appropriate.
(14)	Required Response Date	• Enter the date a response is required from individuals identified in Block 17 (Signature/Distribution).
(15)*	Data Transmitted	
	(A)* Item Number	• Enter sequential number, beginning with 1, of the information listed on EDT.
	(B)* Document/Drawing No.	• Enter the unique identification number assigned to the document or drawing being transmitted.
	(C)* Sheet No.	• Enter the sheet number of the information being transmitted. If no sheet number, leave blank.
	(D)* Rev. No.	• Enter the revision number of the information being transmitted. If no revision number, leave blank.
	(E) Title or Description of Data Transmitted	• Enter the title of the document or drawing or a brief description of the subject if no title is identified.
	(F)* Approval Designator	• Enter the appropriate Approval Designator (Block 15). Also, indicate the appropriate approvals for each item listed, i.e., SQ, ESQ, etc.
	(G) Reason for Transmittal	• Enter the appropriate code to identify the purpose of the data transmittal (see Block 16).
	(H) Originator Disposition	• Enter the appropriate disposition code (see Block 16).
	(I) Receiver Disposition	• Enter the appropriate disposition code (see Block 16).
(16)	Key	• Number codes used in completion of Blocks 15 (G), (H), and (I), and 17 (G), (H) (Signature/Distribution).
(17)	Signature/Distribution	
	(G) Reason	• Enter the code of the reason for transmittal (Block 16).
	(H) Disposition	• Enter the code for the disposition (Block 16).
	(J) Name	• Enter the signature of the individual completing the Disposition 17 (H) and the Transmittal.
	(K)* Signature	• Obtain appropriate signature(s).
	(L)* Date	• Enter date signature is obtained.
	(M)* MSIN	• Enter MSIN. Note: If Distribution Sheet is used, show entire distribution (including that indicated on Page 1 of the EDT) on the Distribution Sheet.
(18)	Signature of EDT Originator	• Enter the signature and date of the individual originating the EDT (entered prior to transmittal to Receiving Organization). If the EDT originator is the cognizant engineer, sign both Blocks 17 and 18.
(19)	Authorized Representative for Receiving Organization	• Enter the signature and date of the individual identified by the Receiving Organization as authorized to approve disposition of the EDT and acceptance of the data transmitted, as applicable.
(20)*	Cognizant Manager	• Enter the signature and date of the cognizant manager. (This signature is authorization for release.)
(21)*	DOE Approval	• Enter DOE approval (if required) by signature or control number that tracks the approval to a signature, and indicate DOE action.

*Asterisk denote the required minimum items check by Configuration Documentation prior to release; these are the minimum release requirements.

RELEASE AUTHORIZATION

Document Number:	WHC-SD-WM-ES-337, Rev. 0
Document Title:	COST BENEFIT AND RISK ASSESSMENT FOR SELECTED TANK WASTE PROCESS TESTING ALTERNATIVES
Release Date:	5/22/95

This document was reviewed following the procedures described in WHC-CM-3-4 and is:

APPROVED FOR PUBLIC RELEASE

WHC Information Release Administration Specialist:

Christine Willingham

C. Willingham 5/22/95

TRADEMARK DISCLAIMER. Reference herein to any specific commercial product, process, or service by trade name, trademark, manufacturer, or otherwise, does not necessarily constitute or imply its endorsement, recommendation, or favoring by the United States Government or any agency thereof or its contractors or subcontractors.

This report has been reproduced from the best available copy. Available in paper copy and microfiche. Printed in the United States of America. Available to the U.S. Department of Energy and its contractors from:

U.S. Department of Energy
Office of Scientific and Technical Information (OSTI)
P.O. Box 62
Oak Ridge, TN 37831
Telephone: (615) 576-8401

Available to the public from: U.S. Department of Commerce
National Technical Information Service (NTIS)
5285 Port Royal Road
Springfield, VA 22161
Telephone: (703) 487-4650

A-6001-400.2 (09/94) WEF256

SUPPORTING DOCUMENT

1. Total Pages 638

2. Title	3. Number	4. Rev No.
Cost Benefit and Risk Assessment for Selected Tank Waste Process Testing Alternatives	WHC-SD-WM-ES-337	0

5. Key Words	6. Author
TWRS, Disposal Program, Cost Benefit and Risk Assessment	Name: K. A. Gasper Kenneth A. Gasper Signature Organization/Charge Code 73200 D3011

7. Abstract

TWRS initial release of Foster Wheeler final report. An assessment of cost benefit and risks associated with the technical baseline for the TWRS Disposal Program and three alternative testing and development strategies.

DISCLAIMER

This report was prepared as an account of work sponsored by an agency of the United States Government. Neither the United States Government nor any agency thereof, nor any of their employees, makes any warranty, express or implied, or assumes any legal liability or responsibility for the accuracy, completeness, or usefulness of any information, apparatus, product, or process disclosed, or represents that its use would not infringe privately owned rights. Reference herein to any specific commercial product, process, or service by trade name, trademark, manufacturer, or otherwise does not necessarily constitute or imply its endorsement, recommendation, or favoring by the United States Government or any agency thereof. The views and opinions of authors expressed herein do not necessarily state or reflect those of the United States Government or any agency thereof.

8. RELEASE STAMP

OFFICIAL RELEASE BY WHC (5)
DATE MAY 22 1995
Sta. 4

MASTER

A-6400-073 (08/94) WEF124

DISTRIBUTION OF THIS DOCUMENT IS UNLIMITED

COST BENEFIT AND RISK ASSESSMENT FOR SELECTED TANK WASTE PROCESS TESTING ALTERNATIVES

prepared for
The Hanford Tank Waste Remediation System
Pretreatment Program

prepared by
Foster Wheeler Environmental Corporation
1981 Snyder Road, Suite 3
Richland, WA 99352

MASTER

This page left intentionally blank.

EXECUTIVE SUMMARY

The U.S. Department of Energy has established the Tank Waste Remediation System (TWRS) program to safely manage wastes currently stored in underground tanks at the Hanford Site. A TWRS testing and development strategy was recently developed to define long-range TWRS testing plans. The testing and development strategy considered four alternatives. The primary variable in the alternatives is the level of pilot-scale testing involving actual waste. This study evaluates the cost benefit and risks associated with the four alternatives.

Four types of risk were evaluated: programmatic schedule risk, process mishap risk, worker risk, and public health risk. These risks were selected to represent values of importance to TWRS stakeholders. The risks were estimated for all elements of the TWRS program, including testing. Costs in 1995 dollars were also estimated. The risks were related in terms of overall relative benefit provided by each alternative. The overall relative benefits were divided by the cost of the alternative to yield cost benefit values.

The assessment of a programmatic schedule risk was based on estimates provided by experts regarding technology risks and the effectiveness of particular testing approaches. Technology risk is defined as the risk that a given technology will fail to perform to design specifications, resulting in schedule extensions to TWRS operations and associated increases in cost and health risk. Technology risk does not include other risks that may extend TWRS

operations as result of human factors such as procedural error, technical miscalculation, and insufficient allocation of funds to support efficient operations.

The primary conclusion reached in this study is that including pilot-scale testing using actual waste, beyond the laboratory- and bench-scale testing contained in the Baseline Alternative is not cost-effective. The primary reasons for this are as follows:

1. Pilot-scale testing in new facilities using actual tank waste cannot provide data in time to support the current design schedule

2. Slippage of the schedule to accommodate this testing would extend the required period of operation of the Hanford Site tank farms, resulting in increased costs and risks

3. The baseline testing strategy, with its combination of laboratory-scale and bench-scale testing using actual and simulated waste, pilot-scale testing using simulants, and full-scale demonstration of selected unit operations adequately addresses the design concerns.

The risk and cost benefit analysis was based on the expertise of three individuals with a combined 40 years of experience in radiochemical process development and operation. This analysis discriminated among alternatives based on the relative differences in risk and cost benefit. Therefore the precision of the risk and cost benefit estimates is of greater

importance than the accuracy. The most effective method for increasing the precision of the estimates is to obtain additional input from industry experts.

Based on the expertise captured in the existing analysis, the baseline testing strategy was deemed adequate for identifying greater than 95% of all major technical issues required to support TWRS design (equivalent to a technology failure risk of 5%). Pilot-scale testing beyond the baseline was deemed adequate for identifying approximately 10% of the major technical issues missed by the baseline testing. The limited value of the pilot-scale testing estimated in this analysis was due to the extensive testing planned for the baseline and the inability of the limited duration of pilot-scale testing to uncover operational problems associated with long-term chemical cycling.

Refinement of the risk values, especially schedule risk, with input from other industry experts has the potential to modify the conclusions of this study. Based on a sensitivity analysis conducted as part of this study, pilot-scale testing using actual waste would be recommended under the following conditions: (1) the Baseline Alternative had an overall probability of 80% to identify all potential technology failures, and (2) pilot-scale testing using actual waste had a 50% probability of resolving technology failures missed by the Baseline Alternative.

This page left intentionally blank.

LIST OF ACRONYMS

ALARA	as low as reasonably achievable
CEL	Chemical Engineering Laboratory
COC	constituent of concern
CPU	compact processing unit
D&D	decontamination and decommissioning
DOE	U.S. Department of Energy
DST	double-shell tank
EDTA	ethylenediaminetetraacetic acid
EPA	U.S. Environmental Protection Agency
FMEF	Fuels and Materials Examination Facility
FTE	fulltime equivalent
FY	fiscal year
HDW-EIS	Hanford Defense Waste Environmental Impact Statement
HI	hazard index
HLW	high-level waste
IPM	Initial Pretreatment Module
LLW	low-level waste
MEI	maximally exposed individual
MEPAS	Multimedia Environmental Pollutant Assessment System
NSC	National Security Council
PNL	Pacific Northwest Laboratories
PPG	Priority Planning Grid
RfD	reference dose
SLAEMS	Single Layer Analytical Element Method-Stratified
SST	single-shell tank
TBP	tributyl phosphate
Tri-Party Agreement	Hanford Federal Facility Agreement and Consent Order
TRU	transuranic
TWRS	Tank Waste Remediation System
WESF	Waste Encapsulation and Storage Facility
WHC	Westinghouse Hanford Company

This page left intentionally blank.

TERMINOLOGY

The following terminology definitions have been provided to clarify the concepts described in this report.

Cost Benefit Values - Sum of the weighted relative risk benefits divided by the total costs.

Functional Area - Any one of the following four TWRS programs: retrieval, pretreatment, LLW vitrification, and HLW vitrification.

Operational Risks - Physical injuries and fatalities associated with exposure to physical hazards in the workplace.

Process Mishap Risks - Risks resulting from process accidents and major maintenance activities.

Public Health Risks - Carcinogenic and noncarcinogenic risks to a hypothetical maximally exposed individual who would use groundwater contaminated with wastes leaked from Hanford Site underground storage tanks.

Radiation-Induced Risks - Incremental increase in lifetime risk of a fatal cancer as a result of external exposure to ionizing radiation.

Relative Benefit - Lowest cost or risk measurement is expressed as a normalized value of 1 and the measurements for the other alternatives are divided into the lowest measurement to yield values that are less than 1.

Relative Risk Benefit - Lowest measurement in a risk category (e.g., worker risks) is expressed as a normalized value of 1 and the risk measurements for the other alternatives are divided into the lowest risk measurement to yield values that are less than 1.

Risk Category - Any one of the following four risk categories: schedule risks, process mishap risks, worker health risks, and public health risks.

Schedule Delay - Delay of waste retrieval and processing necessary to allow testing to fully support design of TWRS facilities.

Schedule Duration - Time between the start of waste retrieval and the completion of vitrification operations.

Schedule Extension - Increase in schedule duration resulting from failure of technology to perform to design specifications.

Schedule Risk - The programmatic risk that the baseline schedule will not be met.

System Costs - Sum of four cost elements (in 1995 dollars):

(1) Design and construction costs

(2) Capital equipment replacement costs for both TWRS program activities and testing activities

(3) Costs resulting from a loss of production utilization of TWRS facility personnel due to schedule extensions and delays

(4) Costs associated with tank waste safety and operations due to schedule extensions and delays

Tank Waste Safety and Operations - Program responsible for continued operations and maintenance of tank farms. The program is a source of fixed costs as long as waste is stored in underground tanks.

Technology Risk - Risk that the selected technology will fail to perform to design specifications leading to schedule extensions and associated increases in program cost and human-health risk.

Transportation Risks - Physical injuries and fatalities associated with the incidence of vehicular accidents during travel to and from the work site.

TWRS Program - The entire tank waste processing program except for testing and transportation and disposal of vitrified HLW.

TWRS Program and Testing - The entire tank waste testing and processing program except for transportation and disposal of vitrified HLW.

Weighting Factor - Multiplication factor indicating the importance of the relative risk benefits across the four risk categories.

Worker Health Risks - Sum of worker operational risks, worker radiation-induced risks, and worker transportation risks.

TABLE OF CONTENTS

1.0 INTRODUCTION 1-1

2.0 TESTING ALTERNATIVES 2-1
2.1 BASELINE ALTERNATIVE 2-1
2.2 ALTERNATIVE 1 2-1
2.3 ALTERNATIVE 2 2-1
2.4 ALTERNATIVE 3 2-2

3.0 DESCRIPTION OF TWRS SYSTEM MODEL 3-1
3.1 GENERAL APPROACH 3-1
3.2 SOURCE DOCUMENTS 3-5
3.3 PREVIOUS WORK 3-7
3.4 ENHANCEMENTS OF THE TWRS SYSTEM MODEL 3-8
3.5 ASSUMPTIONS ABOUT THE COSTS AND BENEFITS OF TESTING 3-8

4.0 DESCRIPTION OF COST AND RISK ASSESSMENT METHODOLOGIES 4-1
4.1 COST ASSESSMENT METHODOLOGY 4-1
4.2 ACTIVITY SCHEDULE METHODOLOGY 4-1
4.3 SCHEDULE RISK METHODOLOGY 4-3
4.4 PROCESS MISHAP RISK ASSESSMENT METHODOLOGY 4-6
4.4.1 Background Information 4-6
4.4.2 Accident Mishaps 4-7
4.4.3 Nonroutine Maintenance 4-7
4.4.4 Consequence Values 4-10
4.4.5 Frequency of Occurrence Categories 4-10
4.4.6 Assumptions 4-13
4.5 WORKER RISK 4-13
4.5.1 Worker Transportation Risks 4-13
4.5.2 Worker Operational Risks 4-15
4.5.3 Worker Routine Radiation Risk 4-17
4.6 PUBLIC RISK ASSESSMENT METHODOLOGY 4-17
4.6.1 SST Leak Generation Rate 4-19
4.6.2 Volume of Expected Leakage 4-19
4.6.3 Constituents of Concern 4-19
4.6.4 Composition of COCs 4-22
4.6.5 Release Setting 4-22
4.6.6 Fate/Transport/Risk Model Selection 4-24
4.6.7 Transport of COCs 4-27
4.6.8 Human Exposure and Health Risk 4-27
4.7 COST BENEFIT ANALYSIS METHODOLOGY 4-29
4.7.1 Relationship Between Stakeholder Values and Risks 4-29
4.7.2 Relative Risk 4-32
4.7.3 Risk Weighting 4-34
4.7.4 Cost Benefit Analysis 4-34

TABLE OF CONTENTS (Con't)

5.0 BASES AND ASSUMPTIONS 5-1
5.1 RESOURCE DISTRIBUTION ASSESSMENT BASES AND ASSUMPTIONS 5-1
5.1.1 Constant Factors 5-1
5.2 ACTIVITY SCHEDULE BASES AND ASSUMPTIONS 5-5
5.3 SCHEDULE RISK BASES AND ASSUMPTIONS 5-10
5.3.1 Estimated TWRS Equipment Replacement Time 5-11
5.3.2 Baseline Replacement Probability 5-12
5.3.3 Replacement Probability with Further Testing 5-13
5.3.4 Incremental Extension Schedule Risk 5-14
5.3.5 Loss of Productive Utilization 5-15
5.3.6 Costs Associated With Schedule Risk 5-17
5.3.7 Worker Risk Associated With Schedule Risk 5-18
5.4 PROCESS MISHAP RISK ASSESSMENT BASES AND ASSUMPTIONS . . 5-19
5.4.1 Accident Mishaps 5-19
5.4.2 Nonroutine Maintenance 5-21
5.4.3 TWRS Operations and Testing Alternatives 5-23
5.5 WORKER AND PUBLIC HEALTH RISK BASES AND ASSUMPTIONS . 5-23
5.5.1 Worker Risk Bases and Assumptions 5-23
5.5.2 Public Health Risk Bases and Assumptions 5-27
5.6 COST-BENEFIT ANALYSIS BASES AND ASSUMPTIONS 5-29

6.0 SUMMARY OF COSTS AND RISKS 6-1
6.1 COSTS 6-1
6.1.1 Retrieval Test Costs 6-4
6.1.2 Pretreatment Test Costs 6-4
6.1.3 LLW Vitrification Test Costs 6-4
6.1.4 HLW Vitrification Test Cost 6-4
6.2 SCHEDULE RISKS 6-4
6.2.1 Baseline Alternative (Alternative 4) 6-14
6.2.2 Alternative 1 6-16
6.2.3 Alternative 2 6-16
6.2.4 Alternative 3 6-19
6.3 PROCESS MISHAP RISKS 6-19
6.3.1 TWRS Program Risks 6-21
6.3.2 Testing Alternatives Risks 6-26
6.4 HUMAN HEALTH RISKS 6-37
6.4.1 Worker Risks 6-37
6.4.2 Public Health Risks 6-56

7.0 COST BENEFIT ANALYSIS AND CONCLUSIONS 7-1
7.1 COST BENEFIT ANALYSIS 7-1
7.2 SENSITIVITY ANALYSIS 7-8
7.3 CONCLUSIONS 7-9

TABLE OF CONTENTS (Con't)

8.0 REFERENCES 8-1

LIST OF FIGURES

1-1. Testing Stages 1-2

2-1. Baseline Alternative - Laboratory- and Bench-Scale Testing With Actual Waste and Simulants 2-3
2-2. Alternative 1 - Large-Scale Pilot Plant with Actual Waste 2-4
2-3. Alternative 2 - Small-Scale Integrated Pilot Plant for Testing with Actual Waste 2-5
2-4. Alternative 3 - Small-Scale Functional Pilot Plant for Testing with Actual Waste 2-6

3-1. Cost Benefit Analysis Architecture 3-2
3-2. Detailed Cost Benefit Analysis Architecture 3-3

4-1. Resource Distribution Logic Diagram 4-2
4-2. Accident Mishap Logic. 4-8
4-3. Nonroutine Maintenance Mishap Risk 4-11
4-4. Physical Injury and Transportation Risk 4-14
4-5. Worker Routine Radiation Risk 4-18
4-6. Rate of Development of New Tank Leaks 4-20

5-1. Retrieval Operations and Testing Schedule 5-6
5-2. Pretreatment Operations and Testing Schedule 5-7
5-3. LLW Vitrification Operations and Testing Schedule 5-8
5-4. HLW Vitrification Operations and Testing Schedule 5-9
5-5. Schedule Extension Example. 5-16
5-6. Schedule Delay Example 5-16
5-7. Schedule Delay and Extension Example 5-16

6-1. TWRS Total Operating Cost 6-2
6-2. Test Alternative Total Costs 6-3
6-3. Retrieval Annual Test Costs 6-5
6-4. Pretreatment Test Costs By Alternative 6-6
6-5. LLW Vitrification Test Costs By Alternative 6-7
6-6. HLW Vitrification Test Costs By Alternative 6-8
6-7. Functional Level Comparison of TWRS Program Process Mishap Risks 6-25
6-8. TWRS Program Process Mishap Risks 6-28
6-9. Process Mishap Risks 6-30
6-10. Process Mishap Risks for Four Testing Alternatives 6-31
6-11. Annual Accident Mishap Risks for Four Testing Alternatives 6-34

LIST OF FIGURES (Con't)

6-12. Annual Nonroutine Maintenance Risks for Four Testing Alternatives 6-35
6-13. Annual Process Mishap Risks for Testing Alternatives 6-36
6-14. Total Injury Risks for TWRS Operations 6-43
6-15. Total Fatality Risks for TWRS Operations 6-44
6-16. Injury Risks for Testing Alternatives 6-45
6-17. Fatality Risks for Testing Alternatives 6-46
6-18. Total Injury Risks for the Baseline Alternative 6-47
6-19. Total Fatality Risks for the Baseline Alternative 6-48
6-20. Total Injury Risks for Alternative 1 6-49
6-21. Total Fatality Risks for Alternative 1 6-50
6-22. Total Injury Risks for Alternative 2 6-51
6-23. Total Fatality Risks for Alternative 2 6-52
6-24. Total Injury Risks for Alternative 3 6-53
6-25. Total Fatality Risks for Alternative 3 6-54
6-26. Carcinogenic Risks and HI Resulting From Leakage Versus Time 6-57

LIST OF TABLES

4-1. Format for Failure Mishaps for Accident and Nonroutine Maintenance Events. . . . 4-9
4-2. Consequence Ranks and Consequence Values. 4-12
4-3. Unit-Risk Factors for Vehicular Transportation 4-15
4-4. Operational Risk Factors 4-16
4-5. Comparison of Constituent Rankings 4-21
4-6. Constituents of Concern Evaluated in the Risk Model 4-22
4-7. Assumed Fractions of Constituents of Concern. 4-23
4-8. MEPAS Input Parameters for Geologic Media Characteristics 4-23
4-9. Inventory Distribution and Risk Conversion Factors of COCs in Tank Waste. . . 4-28
4-10. TWRS Stakeholder Values 4-30
4-11. Relationship of TWRS Values, Risks, and Costs 4-33

5-1. Contractor Labor Costs 5-1
5-2. Site Management/Operations to Site Infrastructure Ratio 5-1
5-3. Operations Costs per Contractor per Activity 5-2
5-4. Base Testing Costs per Contractor per Activity 5-3
5-5. Reddick (1994) Testing Costs per Contractor per Activity 5-3
5-6. Worker Category Breakdown per Contractor for Studies/Permitting 5-4
5-7. Worker Category Breakdown per Contractor for Design 5-4
5-8. Worker Category Breakdown per Contractor for Construction 5-5
5-9. Worker Category Breakdown per Contractor for Operations 5-5
5-10. Consequence Ranks 5-20
5-11. Frequency of Occurrence Values Failure & General Indicators for Accidents . . . 5-22
5-12. Frequency of Occurrence Values & General Indicators for Nonroutine Maintenance5-24

LIST OF TABLES (Con't)

6-1. TWRS Project Costs (millions) 6-1
6-2. Test Alternative Cost Differences (millions) 6-1
6-3. Schedule Risk Summary 6-10
6-4. Definition of Table 6-3 Elements 6-11
6-5. Baseline Alternative Schedule Risk. 6-15
6-6. Alternative 1 Incremental Schedule Risk. 6-17
6-7. Alternative 2 Incremental Schedule Risk 6-18
6-8. Alternative 3 Incremental Schedule Risk 6-20
6-9. TWRS Program Five Highest Accident Risks Based on PPG Values 6-22
6-10. TWRS Program PPG Evaluation Summary 6-23
6-11. TWRS Program Process Mishap Risks Annual Summary 6-27
6-12. Testing Alternatives PPG Summary Values 6-29
6-13. Testing Alternatives Process Mishap Risks Annual Summary 6-33
6-14. Total Risks Summary 6-38
6-15. Total Risks Summary (Baseline Alternative) 6-39
6-16. Total Risks Summary (Alternative 1) 6-40
6-17. Total Risks Summary (Alternative 2) 6-41
6-18. Total Risks Summary (Alternative 3) 6-42
6-19. Incremental Risks of New SST Leakage 6-58
6-20. Incremental and Overall Public Health Risks
Associated With Tank Waste Retrieval 6-59

7-1. Summary of All Risks, Costs, and Cost Benefit Based on Overall TWRS Program. 7-2
7-2. Definition of Table 7-1 Elements 7-3
7-3. Summary of Schedule Risk, Costs, and Cost Benefit 7-6
7-4. Cost Benefit Summary 7-7

LIST OF APPENDICES

A. MODULE DESCRIPTION DATA SHEETS AND FLOW SHEETS . . . . . A-i

B. RESOURCE DISTRIBUTION WORKSHEETS . . . . . B-i

C. SCHEDULE RISK SPREADSHEETS . . . . . C-i

D. INJURY, DEATH, AND MISHAP RISK SPREADSHEETS . . . . . D-i

E. ADJUSTED BASELINE ALTERNATIVE . . . . . E-i

This page left intentionally blank.

1.0 INTRODUCTION

The U.S. Department of Energy (DOE) has established the Tank Waste Remediation System (TWRS) program to safely manage and dispose of high-level wastes (HLW), transuranic (TRU) wastes, and low-level wastes (LLW) currently stored in underground tanks at the Hanford Site in Eastern Washington. The scope of TWRS includes: tank safety and operations, waste characterization, retrieval, pretreatment, LLW vitrification, HLW vitrification as well as associated transfer, interim and long-term storage, and disposal of wastes. Testing is underway to provide the required data to support the design, facility operations, and preparation of safety and regulatory documentation for the TWRS program.

A TWRS testing and development strategy was recently prepared to help define long-range TWRS testing plans (Reddick 1994). This testing and development strategy considered four alternatives that included various combinations of laboratory-scale, bench-scale, pilot-scale, and full-scale testing of unit operations for the TWRS retrieval, pretreatment, LLW vitrification, and HLW vitrification programs. The primary variables considered in Reddick (1994) were the levels of pilot-scale testing involving actual waste and the size of the pilot equipment.

The process of testing can occur in stages, starting in the laboratory and moving to full-scale testing and startup operations, depending on cost benefit considerations (Figure 1-1). The results of the previous stage aid the design for the next stage of testing (i.e., laboratory-scale testing results feed into bench-scale testing design, etc.). Design and construction costs and health risks for testing generally increase with each successive stage; however, due to the information obtained during testing, overall programmatic costs and risks decrease.

Reddick (1994) concluded that construction and operation of an integrated pilot plant for tests with actual tank waste was not technically supportable. Reddick (1994) further concluded that emphasis should be placed on testing in existing facilities to obtain data to support design and operations.

This study expands upon the four alternatives developed in Reddick (1994) to develop a cost benefit analysis and risk assessment of each testing strategy. The primary objective of this study is to provide a recommendation, based on quantifiable criteria, whether a pilot plant that uses actual tank waste rather than simulated waste is needed to support the TWRS program.

The structure of this report is as follows:

- Section 1 introduces the report **subject**
- Section 2 describes the test strategy **alternative** evaluation
- Section 3 describes the **approach** used in this study to assess risk and cost benefit
- Section 4 described the assessment **methodologies** for costs and risks
- Section 5 describes the bases and **assumptions** used to estimate the costs and risks
- Section 6 presents the detailed **costs and risks**
- Section 7 describes the **results** of the cost benefit analysis and presents conclusions.

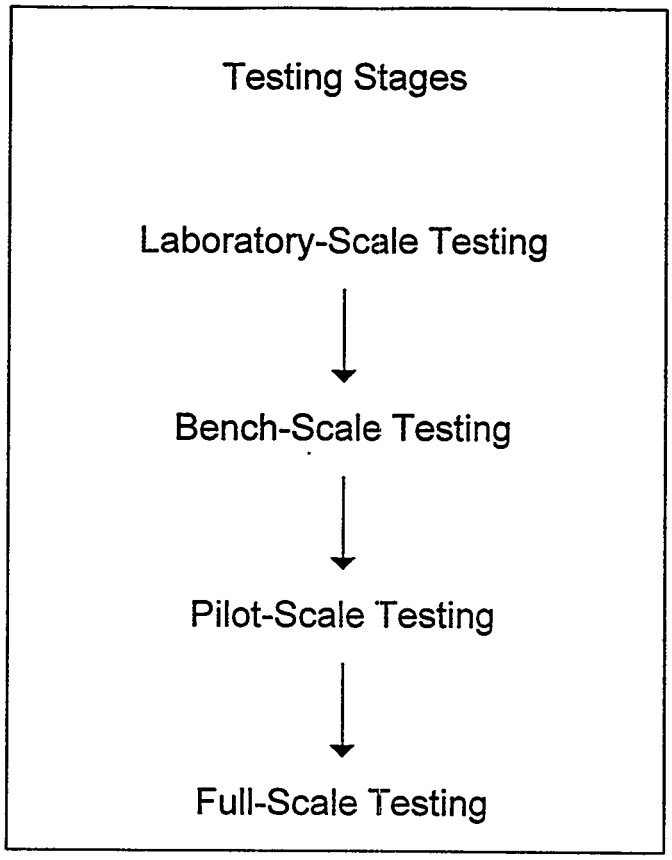

Figure 1-1. Testing Stages.

2.0 TESTING ALTERNATIVES

Reddick (1994) defined four TWRS program testing alternatives. These alternatives are briefly described in this section. During the course of evaluating the alternatives, it was determined that the schedules for Alternatives 1, 2, and 3 did not support the current TWRS design schedules. These alternatives were renamed Alternatives 1a, 2a, and 3a, respectively, based on the current TWRS schedules. Three new alternatives (i.e., Alternatives 1b, 2b, and 3b) were created based on the assumption that TWRS design milestones could be delayed to allow for completion of testing prior to completion of Title II design. The "a" and "b" alternatives are identical in all respects except for schedule.

Figures 2-1 through 2-4 summarize the testing elements of the Baseline Alternative and Alternatives 1, 2, and 3, respectively. Note that all alternatives share the testing elements in the Baseline Alternative and differ only in the degree and type of pilot-scale testing using actual waste.

2.1 BASELINE ALTERNATIVE

The Baseline Alternative involves laboratory- and bench-scale testing with actual waste and simulants, combined with nonradioactive and simulant testing of pilot-scale equipment (Alternative 4 from Reddick 1994). These tests are also common to Alternatives 1, 2, and 3. Existing laboratory and hot cell capability in facilities such as the 222-S Laboratory, 324 Building, 325 Building, and the Chemical Engineering Laboratory (CEL) would be combined with new pilot-scale and full-scale testing facilities (Reddick 1994).

2.2 ALTERNATIVE 1

Alternative 1 would add large-scale pilot testing with actual waste for each of the major unit operations in new TWRS facilities. The large throughput requirements for this equipment would be met with direct linkage to the tank farms. Compact processing units (CPUs) would be used in this alternative for the testing of solids washing and solids/liquids separation, cesium removal, and HLW melter operations. A CPU would also be built for the testing of LLW melter operations and HLW melter operations. Due to the large size of LLW melter, a CPU using a pilot-scale melter would be constructed (Reddick 1994).

2.3 ALTERNATIVE 2

Alternative 2 would add a small-scale close-coupled integrated pilot plant for testing of TWRS process unit operations with actual waste. Operation of the integrated pilot plant would entail handling of large volumes of radioactive feed and waste. The facility would be linked directly to the tank farms. A new facility would be required because no existing facility meets location and size needs. A pilot-scale LLW melter would not be included in

the integrated pilot plant due to size considerations and associated cost. Bench-scale LLW melter testing with actual waste would be combined with pilot-scale simulant testing of the LLW melter (Reddick 1994).

2.4 ALTERNATIVE 3

Alternative 3 would provide a small-scale functional pilot plant for testing each of the major unit operations, except the LLW melter using actual waste. Typically, one of the unit operations would be operated independently from the other unit operations. Equipment changeout and replacement of equipment may be required between the tests for each unit operation. Serial development as used in this approach would extend the testing schedule more than a parallel testing approach.

Due to the size of the pilot-scale LLW melter, bench-scale testing with actual waste and pilot-scale testing with simulants would be used. The facility requirements for this alternative essentially match the capabilities of the Waste Encapsulation and Storage Facility (WESF) or the Fuels and Materials Examination Facility (FMEF) (Reddick 1994).

Baseline Alternative - Bench Scale/Laboratory Hot Testing

Large pilot plant for hot functional testing	Small scale integrated pilot plant	Small scale functional hot pilot plant	Bench scale hot tests	Lab scale hot tests	Bench Scale simulants and tracers	Lab scale simulants and tracers	Pilot scale simulant tests	Large scale and full scale equipment tests	Full scale hot demonstration or process test
Retrieval	Retrieval	Retrieval	Retrieval	Retrieval	Retrieval	Retrieval	Retrieval	Retrieval	Retrieval
Sludge Washing	Sludge Washing	Sludge Washing	Sludge Washing	Sludge Washing	Sludge Washing	Sludge Washing	Sludge Washing	Sludge Washing	Sludge Washing
Solids/liquid separation	Solids/liquid separation	Solids/liquid separation	Solids/liquid separation	Solids/liquid separation	Solids/liquid separation	Solids/liquid separation	Solids/liquid separation	Solids/liquid separation	Solids/liquid separation
CsIX	CsIX	CsIX	CsIX	CsIX	CsIX	CsIX	CsIX	CsIX	CsIX
LLW Melter	LLW Melter	LLW Melter	LLW Melter	LLW Melter	LLW Melter	LLW Melter	LLW Melter	LLW Melter	LLW Melter
HLW Melter	HLW Melter	HLW Melter	HLW Melter	HLW Melter	HLW Melter	HLW Melter	HLW Melter	HLW Melter	HLW Melter
New facility tied directly to the tank farms	New facility tied directly to the tank farms	WESF, FMEF, 324 Bldg.	222-S, 325 Bldg., 324 Bldg.	222-S, 325 Bldg.	222-S, 325 Bldg., 324 Bldg.	222-S, 325 Bldg.	Chem. Engr. Lab 200E, 300 Area	New facility in 200E	In-Tank and In-Facility

Clear boxes represent the tests planned for Baseline Alternative testing.

Figure 2-1. Baseline Alternative - Laboratory- and Bench-Scale Testing with Actual Waste and Simulants.

Alternative 1 - Large Scale Functional Pilot Plant

Large pilot plant for hot functional testing	Small scale integrated pilot plant	Small scale functional hot pilot plant	Bench scale hot tests	Lab scale hot tests	Bench Scale simulants and tracers	Lab scale simulants and tracers	Pilot scale simulant tests	Large scale and full scale equipment tests	Full scale hot demonstration or process test
Retrieval	Retrieval	Retrieval	Retrieval	Retrieval	Retrieval	Retrieval	Retrieval	Retrieval	Retrieval
Sludge Washing	Sludge Washing	Sludge Washing	Sludge Washing	Sludge Washing	Sludge Washing	Sludge Washing	Sludge Washing	Sludge Washing	Sludge Washing
Solids/liquid separation	Solids/liquid separation	Solids/liquid separation	Solids/liquid separation	Solids/liquid separation	Solids/liquid separation	Solids/liquid separation	Solids/liquid separation	Solids/liquid separation	Solids/liquid separation
CsIX	CsIX	CsIX	CsIX	CsIX	CsIX	CsIX	CsIX	CsIX	CsIX
LLW Melter	LLW Melter	LLW Melter	LLW Melter	LLW Melter	LLW Melter	LLW Melter	LLW Melter	LLW Melter	LLW Melter
HLW Melter	HLW Melter	HLW Melter	HLW Melter	HLW Melter	HLW Melter	HLW Melter	HLW Melter	HLW Melter	HLW Melter
New facility tied directly to the tank farms	New facility tied directly to the tank farms	WESF, FMEF, 324 Bldg.	222-S, 325 Bldg., 324 Bldg.	222-S, 325 Bldg.	222-S, 325 Bldg., 324 Bldg.	222-S, 325 Bldg.	Chem. Engr. Lab 200E, 300 Area	New facility in 200E	In-Tank and In-Facility

Clear boxes represent the tests planned for Alternative 1 testing.

Figure 2-2. Alternative 1 - Large-Scale Pilot Testing with Actual Waste.

Alternative 2 - Small Scale Integrated Pilot Plant

Large pilot plant for hot functional testing	Small scale integrated pilot plant	Small scale functional hot pilot plant	Bench scale hot tests	Lab scale hot tests	Bench Scale simulants and tracers	Lab scale simulants and tracers	Pilot scale simulant tests	Large scale and full scale equipment tests	Full scale hot demonstration or process test
Retrieval	Retrieval	Retrieval	Retrieval	Retrieval	Retrieval	Retrieval	Retrieval	Retrieval	Retrieval
Sludge Washing	Sludge Washing	Sludge Washing	Sludge Washing	Sludge Washing	Sludge Washing	Sludge Washing	Sludge Washing	Sludge Washing	Sludge Washing
Solids/liquid separation	Solids/liquid separation	Solids/liquid separation	Solids/liquid separation	Solids/liquid separation	Solids/liquid separation	Solids/liquid separation	Solids/liquid separation	Solids/liquid separation	Solids/liquid separation
CsIX	CsIX	CsIX	CsIX	CsIX	CsIX	CsIX	CsIX	CsIX	CsIX
LLW Melter	LLW Melter	LLW Melter	LLW Melter	LLW Melter	LLW Melter	LLW Melter	LLW Melter	LLW Melter	LLW Melter
HLW Melter	HLW Melter	HLW Melter	HLW Melter	HLW Melter	HLW Melter	HLW Melter	HLW Melter	HLW Melter	HLW Melter
New facility tied directly to the tank farms	New facility tied directly to the tank farms	WESF, FMEF, 324 Bldg.	222-S, 325 Bldg., 324 Bldg.	222-S, 325 Bldg.	222-S, 325 Bldg., 324 Bldg.	222-S, 325 Bldg.	Chem. Engr. Lab 200E, 300 Area	New facility in 200E	In-Tank and In-Facility

Clear boxes represent the tests planned for Alternative 2 testing.

Figure 2-3. Alternative 2 - Small-Scale Close-Coupled Integrated Pilot Plant for Testing with Actual Waste.

Large pilot plant for hot functional testing	Small scale integrated pilot plant	Small scale functional hot pilot plant	Bench scale hot tests	Lab scale hot tests	Bench Scale simulants and tracers	Lab scale simulants and tracers	Pilot scale simulant tests	Large scale and full scale equipment tests	Full scale hot demonstration or process test
Retrieval	Retrieval	Retrieval	Retrieval	Retrieval	Retrieval	Retrieval	Retrieval	Retrieval	Retrieval
Sludge Washing	Sludge Washing	Sludge Washing	Sludge Washing	Sludge Washing	Sludge Washing	Sludge Washing	Sludge Washing	Sludge Washing	Sludge Washing
Solids/liquid separation	Solids/liquid separation	Solids/liquid separation	Solids/liquid separation	Solids/liquid separation	Solids/liquid separation	Solids/liquid separation	Solids/liquid separation	Solids/liquid separation	Solids/liquid separation
CsIX	CsIX	CsIX	CsIX	CsIX	CsIX	CsIX	CsIX	CsIX	CsIX
LLW Melter	LLW Melter	LLW Melter	LLW Melter	LLW Melter	LLW Melter	LLW Melter	LLW Melter	LLW Melter	LLW Melter
HLW Melter	HLW Melter	HLW Melter	HLW Melter	HLW Melter	HLW Melter	HLW Melter	HLW Melter	HLW Melter	HLW Melter
New facility tied directly to the tank farms	New facility tied directly to the tank farms	WESF, FMEF, 324 Bldg.	222-S, 325 Bldg., 324 Bldg.	222-S, 325 Bldg.	222-S, 325 Bldg., 324 Bldg.	222-S, 325 Bldg.	Chem. Engr. Lab 200E, 300 Area	New facility in 200E	In-Tank and In-Facility

Clear boxes represent the tests planned for Alternative 3 testing.

Figure 2-4. Alternative 3 - Small-Scale Functional Pilot Plant for Testing with Actual Waste.

3.0 DESCRIPTION OF TWRS SYSTEM MODEL

This section describes the general approach used in this study to assess the risks and cost benefits of the four alternatives described in Section 2. The study focused on identifying and quantifying significant risk and cost impacts to the TWRS program due to testing. The approach involved performing sufficient cost analyses to measure significant variations in costs, and sufficient risk analyses to estimate significant variations in schedule and human health risks. Critical risk and cost variables were estimated and used in the cost benefit analysis.

Although the general approach involved adaptation of established assessment methodologies, the data required to estimate the variables and the resulting network of data elements formed a complex structure. This study was facilitated by the existence of previously-developed TWRS system analysis tools that served as the basis for many of the baseline assumptions.

This section also describes the primary source documents used in the analysis and previous work, and modifications made to the TWRS system model. The fundamental assumptions regarding pilot testing and schedule constraints are also discussed.

3.1 GENERAL APPROACH

The discussion in this section is intended as an overview of the general approach used in this study to assess risks and cost benefits. Specific methodologies are described in Section 4.

The cost benefit analysis architecture used for this study is shown in Figures 3-1 and 3-2. Figure 3-1 is a conceptual flowchart that shows the relation of the five major categories of cost and risk to each other and to the cost benefit analysis. Figure 3-2 charts the same process in greater detail. These five major categories of cost and risk are: (1) schedule risks, (2) process mishap risks, (3) worker risks, (4) public health risks, and (5) costs. Selection of these cost and risk categories was based on a review and analysis of TWRS stakeholder values. All of the information, factors, and calculations that produce these five categories of cost and risk feed into the cost benefit analysis.

This study began with a thorough review of the source documents that produced activity schedules by fiscal year for the TWRS program and the Baseline Alternative. This information was enhanced to produce activity schedules for Alternatives 1, 2, and 3. These activity schedules were utilized in evaluating each of the risk and cost categories.

The **Schedule Risks Category** used the activity schedules and other input to determine the durations of technology-related elements of the TWRS program. From this, adjustments to the overall TWRS schedule were determined for the length of (1) startup delays to allow for input of testing data to the TWRS design and (2) extensions of the completion of the TWRS program due to technology risks. Technology risk is defined as the risk that the technology

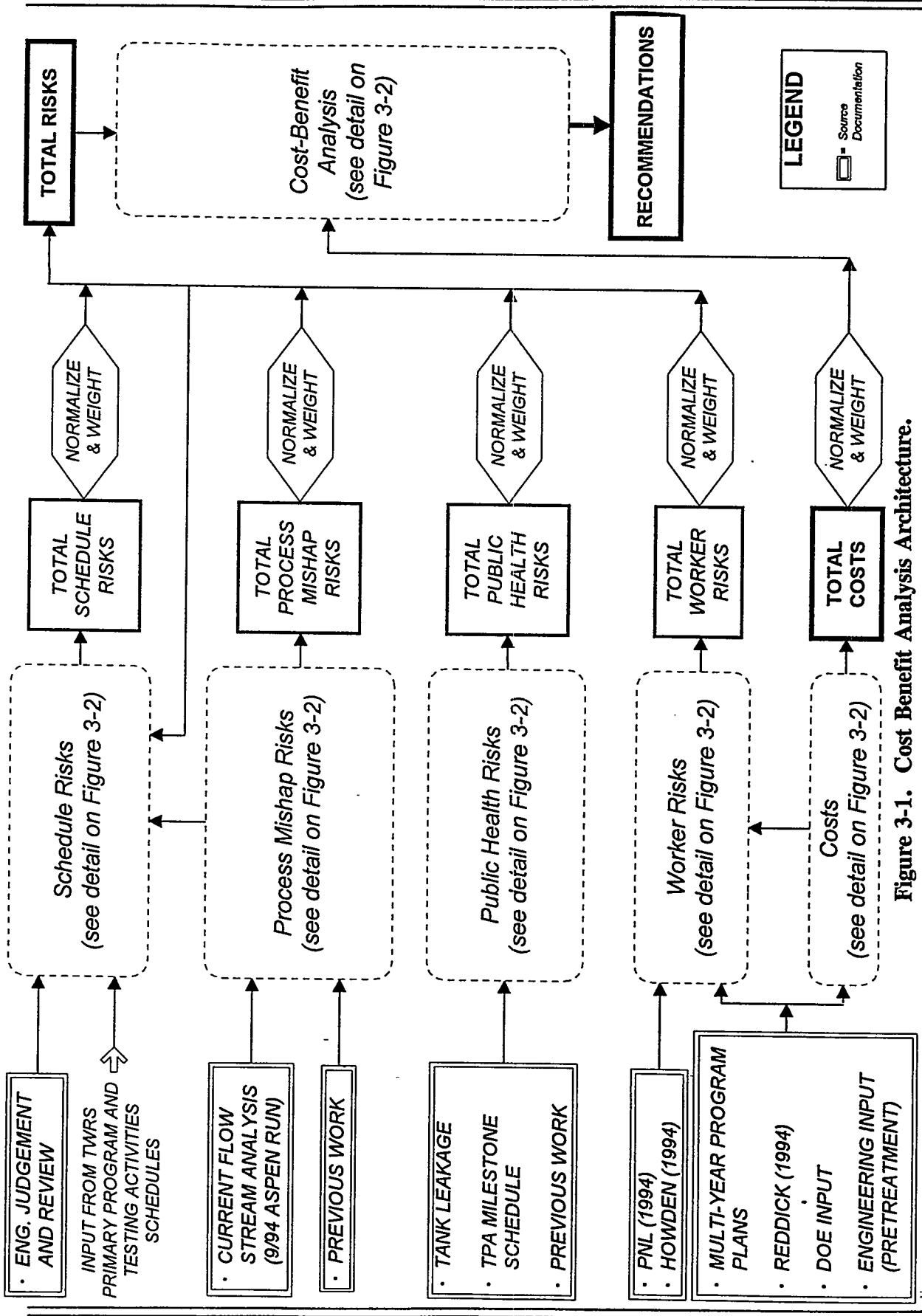

Figure 3-1. Cost Benefit Analysis Architecture.

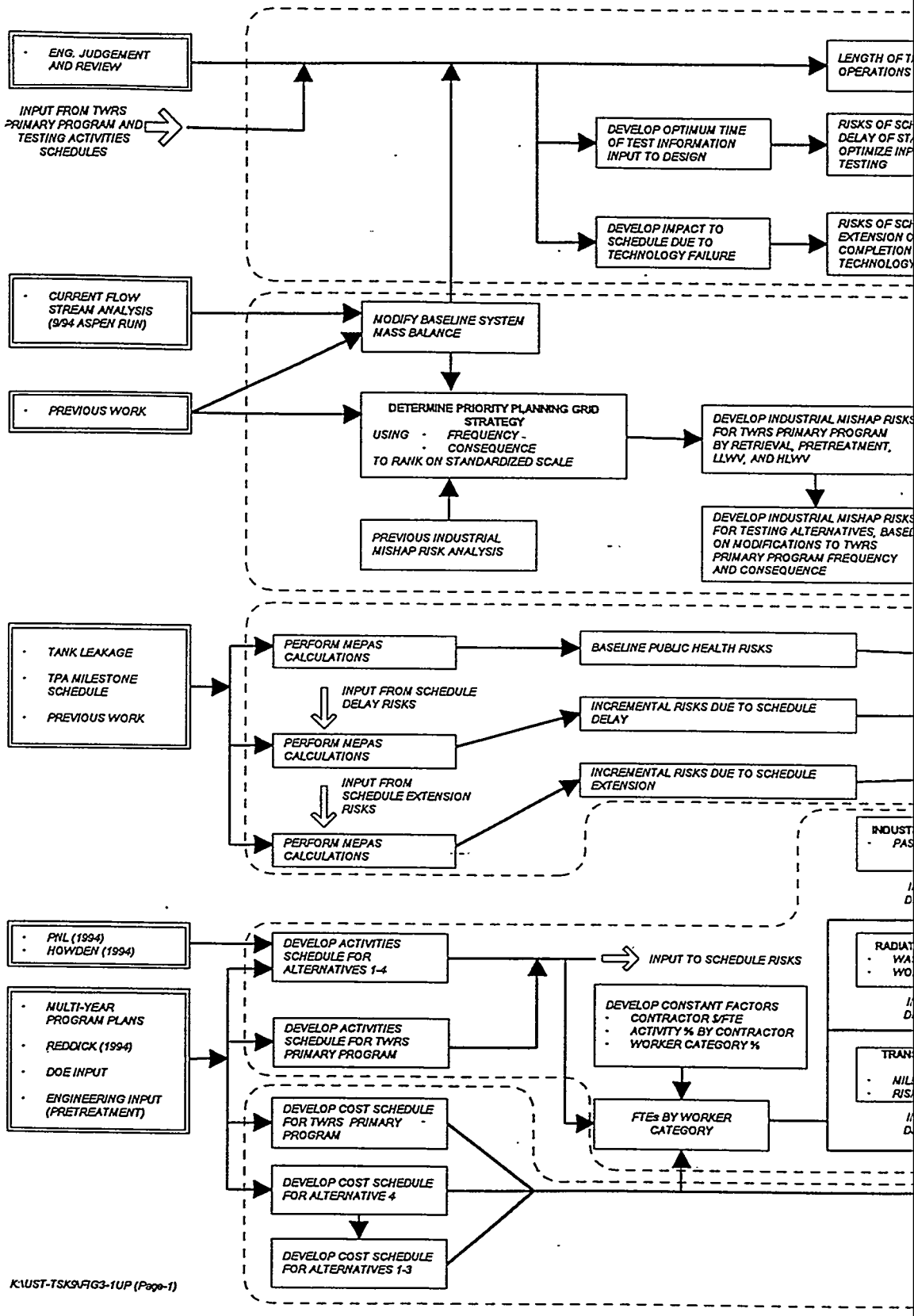

K:\UST-TSK9\FIG3-1UP (Page-1)

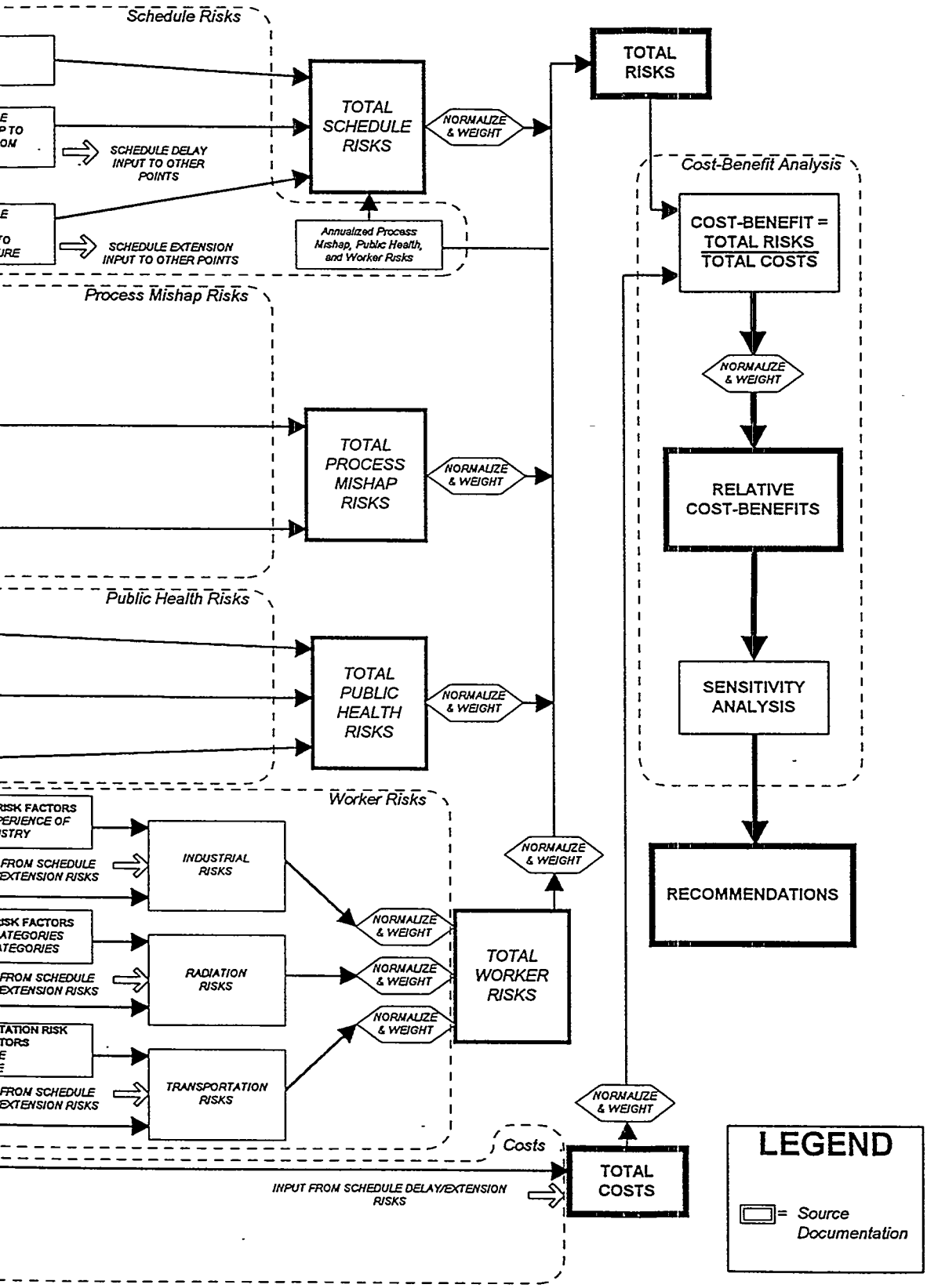

Figure 3-2. Detailed Cost Benefit Analysis Architecture.

This page intentionally left blank.

will fail to perform to design specifications, resulting in schedule extensions in the TWRS program and associated increases in worker and public risks and costs.

The **Process Mishap Risks Category** used adaptations of previous work based on Westinghouse Hanford Company's (WHC's) Priority Planning Grid (PPG), and estimates of the frequency and consequence of equipment failure to determine the risks of catastrophic and nonroutine failures.

The **Worker Risks Category** used the work time (person hours) for various worker categories as derived from the activity and cost schedules and other resources. These hours were combined with (1) industrial risk factors, (2) radiation risk factors, and (3) transportation risk factors to determine the total routine worker risks.

The **Public Health Risks Category** used previous work concerning impacts to a maximally exposed individual (MEI) resulting from leakage from single-shell tanks (SSTs) combined with incident rates of new leaks in SSTs to determine a baseline public health risk. This risk was assumed to be impacted by the schedule delays and extensions associated with individual alternatives to account for the effects of additional leaks caused by delays in retrieving the SST waste.

The **Costs Category** was derived by using the TWRS source documents to produce cost schedules for the TWRS program and the testing alternatives. The costs were summed according to the four functional areas for the TWRS program and each testing alternative. Additional costs were calculated for schedule delays and extensions.

The cost benefit analysis used these categories of information, along with weightings and normalization, to produce the relative cost benefits for each of the testing alternatives based on their impacts to the overall TWRS program. A sensitivity analysis was performed and a recommendation was made.

The cost benefit analysis model developed as a result of this study allows for variation of the input parameters, including changes to the underlying assumptions, factors, probabilities, consequences, and weightings. The model utilizes linked spreadsheets to calculate the various factors used to estimate costs, risks, and cost benefit. Linking the spreadsheets facilitates the ability to perform additional sensitivity analyses, if required. These factors are then weighted and the final cost benefits of the proposed pilot testing alternatives are determined. Varying the parameters allows for a sensitivity analysis of the findings.

3.2 SOURCE DOCUMENTS

Many of the key factors used in this report were derived from various source documents and interviews of TWRS pretreatment program personnel. The primary source documents are described as follows:

1. **Work Force Loading for Initial Pretreatment Module (IPM) Operations**

   - Contains work force loading and cost information by fiscal year for pretreatment modules.

2. **Low-Level Waste Vitrification Pilot-Scale System Needs Report (Morrissey and Whitney 1994)**

   - Examines the need to conduct pilot-scale testing of the LLW vitrification process.
   - Recommends that a nonradioactive integrated pilot plant be operated.
   - Additionally recommends two small-scale systems, one using actual waste and the other using simulants with tracers to validate the selection of waste simulants for the pilot plant.

3. **Draft Hanford Tank Waste Remediation Systems Waste Pretreatment Program Test Requirements Strategy and Issues (PNL 1994)**

   - Examines all of the testing required to support the IPM project. Discussion includes test strategy, status, schedule, and issues.
   - Contains information for identifying schedule risks, but no cost information.
   - Defines the testing methodology being employed.

4. **TWRS Multi-Year Work Plans**

   - Multi-year work plans providing fiscal year budget estimates for difference TWRS activities.
   - Details include LLW costs by fiscal year by activity, and HLW costs by fiscal year by activity.

5. **4.2.2.1 Pretreatment System (Logic Diagram)**

   - Provides a logic diagram for the IPM project.
   - Details the logic flow of the three major modules: in-tank processing, LLW pretreatment, and HLW pretreatment.

6. **TWRS Tank Pretreatment and Vitrification Process Development Testing Requirements Assessment (Howden 1994)**

   - Identifies 140 technology issues that need to be resolved through testing.

- Includes an assessment of pretreatment technology development needs.
- Includes a chart that defines the technology groups that need to be tested and what type of testing is required.
- Contains raw data on pretreatment and vitrification testing.

7. **Testing and Development Strategy for the Tank Waste Remediation System (Reddick 1994) (Preliminary Draft, Review Draft, and Final)**

   - Contains discussion of the different test strategies.
   - Provides justification for the selected test strategy for the TWRS program.
   - Preliminary draft contains a detailed discussion of recent DOE facility startup problems.

8. **Experimental Infrastructure and Logistics Required to Support TWRS Technology Development (Farish 1994)**

   - Provides a model for evaluating testing alternatives.

9. **DST Retrieval Engineering Fiscal Year (FY) 1995-1997 Plan Justification Document**

   - Provides justification for the proposed engineering and technology development required to support the design of the double-shell tank (DST) retrieval system.
   - Outlines numerous trade studies and testing required.

3.3 PREVIOUS WORK

The TWRS system analysis tools, developed by Foster Wheeler Environmental Corporation for WHC in previous reports, were used extensively in the development of this cost benefit analysis and are described below.

The *Risk-Based Systems Analysis of Emerging High-Level Waste Tank Remediation Technologies* (WHC 1994) report developed the baseline TWRS system model as a tool to assist in the decision-making process for funding candidate waste tank remediation technologies. The model was developed to demonstrate that it is possible to review the characteristics of candidate technologies early in their development, and to perform systematic, qualitative evaluations of their potential influence on overall tank waste remediation system human health risks and costs. The model incorporates a structured and objective method that can be applied consistently and cost effectively in technology

evaluations. The model concept was based on the premise that it is necessary to evaluate the effect of technologies in the context of a complete, multi-technology remediation system rather than evaluating individual technologies in isolation where costs and risks elsewhere in the system may be overlooked.

The *Feasibility Study of Tank Leakage Mitigation Using Subsurface Barriers* (WHC 1995) report further refined the TWRS system model in the context of evaluating the effects of subsurface barriers on the overall costs and risks of the TWRS program. The model detailed the effect of tank leakage on public health as related to groundwater contamination and the impacts to the MEI. The report also developed a methodology for integrating worker risks due to industrial exposures and vehicular accidents.

3.4 ENHANCEMENTS OF THE TWRS SYSTEM MODEL

The overall system approach developed in the TWRS system model and some of its analytical tools were enhanced and adapted for use in this study. The model now utilizes the system concept to review overall cost, risk, and scheduling benefits of pilot testing programs in conjunction with TWRS operations, and performs systematic qualitative evaluations of their potential influence on overall tank waste remediation effectiveness.

The TWRS system model was enhanced and adapted for this study in several ways.

- The risks and costs were developed on a fiscal-year basis in addition to the life-cycle basis previously used.

- Material balances for TWRS operations were adjusted to reflect the most recent information from the TWRS program, including material balances from the most recent ASPEN data (September 1994), which modified the stream concentrations. The significant changes included: (1) the change from production of HLW glass cullets to the production of glass logs, and (2) the cullet rework and vitrification offgas processing module in the TWRS system model no longer accepts HLW.

- Individual modules within the TWRS system model were further refined and updated by compiling the 13 operations modules to four functional areas: retrieval, pretreatment, LLW vitrification, and HLW vitrification. A new module was added that assesses technology readiness based on the contributions of the proposed testing alternatives. This functional approach helped facilitate risk, cost, and scheduling calculations based on existing programmatic budgets and schedules that are defined by functional area.

3.5 ASSUMPTIONS ABOUT THE COSTS AND BENEFITS OF TESTING

In performing the study, it was recognized that each of the proposed testing alternatives, if implemented, would provide information that would contribute to the design and operations

of the facilities by reducing uncertainty and optimizing the processes. The benefits to optimizing the design generally increase with the scope and scale of the tests. However, increases in the scope and scale of testing are typically accompanied by increases in the cost and schedule. Risks to workers and the public are also increased during installation and operation of testing facilities. Therefore, the relative benefits derived by testing must be measured against the net costs and impacts. A testing program that is not completed until after construction and startup will likely have only marginal benefits at significant costs. Although some benefits may be derived through improved operations and reduced technology failure risk, these benefits would be quite small.

This study attempts to account for the timing of the inputs from the various testing alternatives and considers the impacts to the TWRS program if the schedules are: (1) kept to the planned *Hanford Federal Facility Agreement and Consent Order* (Tri-Party Agreement) milestones (Ecology et al. 1989) or (2) delayed to allow the information derived from the pilot-scale testing to be used in design. If the schedules are kept to the Tri-Party Agreement milestones, it was determined that testing associated with only the Baseline Alternative would be completed in time for use in the TWRS design. For Alternatives 1a, 2a, and 3a it was determined that the testing would extend well beyond the design-related Tri-Party Agreement milestones, so only limited benefits would be derived from these three alternatives if the schedule was not changed. Alternatives 1b, 2b, and 3b were subsequently developed to enable evaluation of cases involving optimization of testing and design schedules.

This page intentionally left blank.

4.0 DESCRIPTION OF COST AND RISK ASSESSMENT METHODOLOGIES

This section describes assessment methodologies for costs and various types of risk including schedule risk, process mishap risk, worker risk, and public health risk.

4.1 COST ASSESSMENT METHODOLOGY

Resource distribution for the TWRS program and testing alternatives included distribution of costs and labor full-time equivalents (FTEs) among activities, contractors, and worker categories. The logic used for resource distribution is shown in Figure 4-1. The same sequence of logic was used for the TWRS program resource distribution, the Baseline Alternative, and Alternatives 1, 2, and 3 (denoted as Alternative N in Figure 4-1).

Fiscal year costs for the TWRS program were obtained from each functional area's multi-year program plans. These plans include activity-based budgets that are broken down into five major functional categories: (1) program management, (2) technology development, (3) systems definition, (4) facilities operations, and (5) facilities planning. Using these categories, the budgets were divided into operations costs and testing costs. The annual costs of technology development were identified and backed out. The remaining costs are the TWRS program sequence as shown in Figure 4-1. The costs of technology development represent the costs of the Baseline Alternative, and form the initial costs of the Baseline Alternative sequence. The Alternative N costs are found in Reddick (1994) and form the initial costs of the Alternative N sequence.

Using the factors described in Section 5.1.1, the initial costs of each sequence are distributed first to one of four activities: (1) studies/permitting, (2) design, (3) construction/ decontamination and decommissioning (D&D), and (4) operations. These activities broadly describe the types of work that occur during the lifetime of the program. The previous division of the four functional areas is retained. Costs are next distributed to one of six contractor categories: (1) site management/operations, (2) site infrastructure, (3) national laboratories, (4) site constructors, (5) architecture/engineering, and (6) construction contractors. Given the cost allocated to each contractor, the FTEs per contractor are calculated by dividing by a cost per FTE ($/FTE) constant factor. The resulting FTEs are then distributed to worker categories, which are then summed to yield the total FTEs per worker category.

The results of the resource cost distribution feed into the cost benefit analysis, and the results of the resource labor distribution calculations feed into various risk calculations when the risk is dependent on work force size.

4.2 ACTIVITY SCHEDULE METHODOLOGY

The schedule methodology used for this study required development of a generic model using Microsoft Project (Microsoft Project is a trademark of Microsoft Corporation) planning

Figure 4-1. Resource Distribution Logic Diagram.

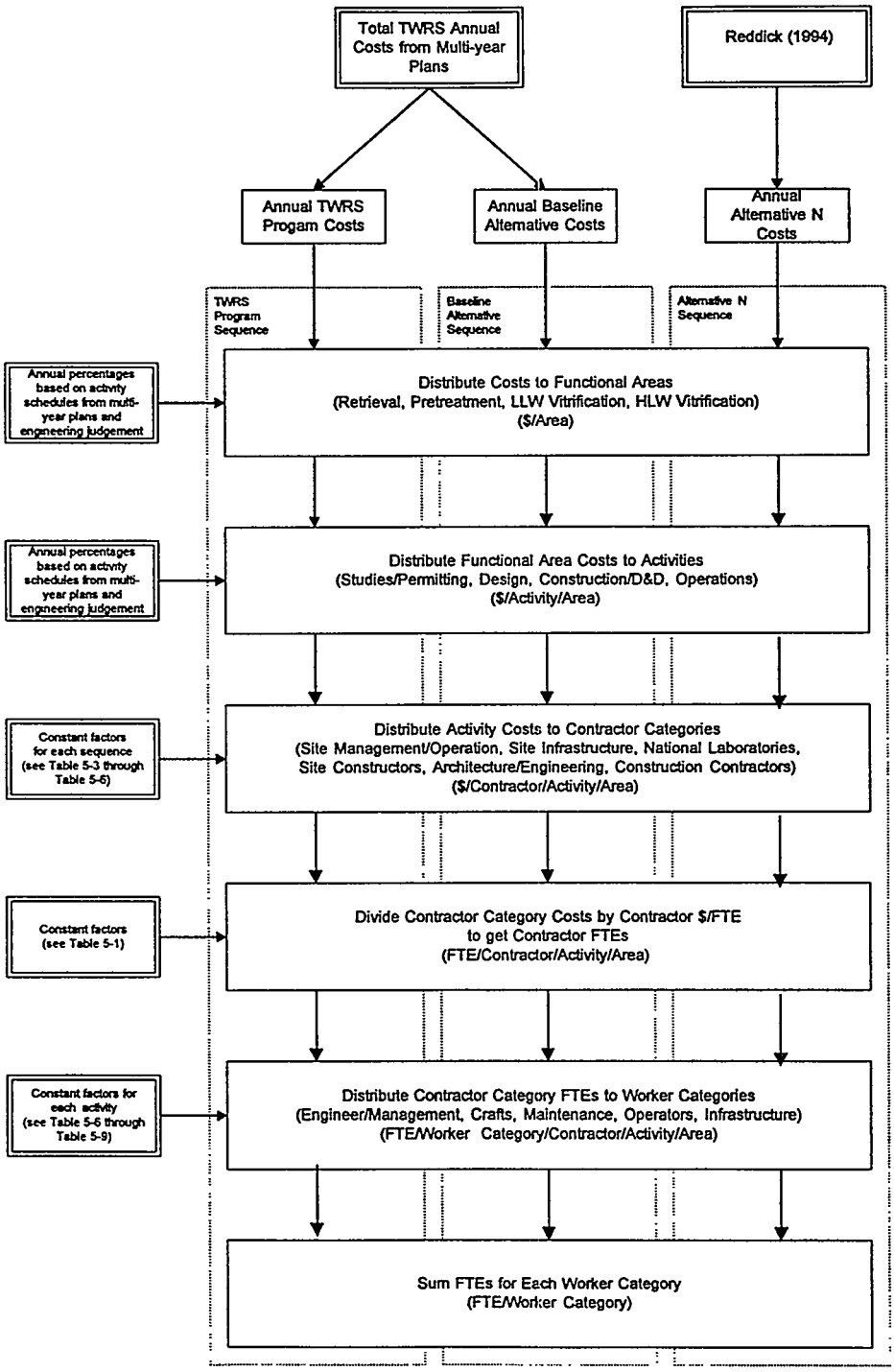

software. Using the model, a critical path schedule was developed for each functional area. The bases for the logic and schedule dates were the TWRS multi-year program plan logic diagrams. From these diagrams, activities such as design, construction, and startup were selected and entered into the model. The schedules for the testing alternatives were derived from Howden (1994), Pacific Northwest Laboratories (PNL), and the multi-year program plans for bench- and laboratory-scale testing. The design/construct schedule proposed by Reddick (1994) was used as the basis for scheduling the proposed test facilities.

4.3 SCHEDULE RISK METHODOLOGY

Schedule risk is the result of schedule delay and schedule extension to the baseline program schedule. The purpose of evaluating schedule risk was to estimate the potential for schedule growth beyond the current Tri-Party Agreement milestones, and to assign a probability and consequence value to the potential growth. This section provides a description of the methodology used to calculate schedule risk. The assumptions used in the schedule risk evaluation are provided in Section 5.3. The results of the schedule risk evaluation are provided in Section 6.

Schedule delay is defined as the startup delay necessary to allow testing to fully support the design of the TWRS facilities. The baseline testing schedule provides results during TWRS design, resulting in no schedule delay associated with this alternative. Similarly, Alternatives 1a, 2a, and 3a are assumed to meet the baseline schedule and thus have no schedule delay associated with them. Alternatives 1b, 2b, and 3b assume that the baseline schedule can slip to allow completion of pilot-scale testing prior to conclusion of design. The duration of the delay has been estimated for each testing alternative and the additional time is factored into the calculations for each of the other risk categories.

The current TWRS design/construct schedule is "success-oriented." It is based on the assumption that baseline testing and a robust facility design will accommodate all potential deficiencies in the process systems. Thus, the baseline program schedule has a potential for extension if activities do not produce the expected results. If poor performance of a unit operation causes a reduction in process operating efficiency or requires facility shutdown to redesign and install a new system, the operations schedule will be adversely impacted. Risks associated with schedule extension include incremental increases in costs and worker and public health risks. The evaluation of schedule risk addressed only those major unit operations (or groups of unit operations) that were considered to have the potential for significant impact on schedule risk.

Schedule extension risk is defined as the probability that an event that adversely impacts the schedule will occur, multiplied by the consequence of the event. An event that adversely impacts the schedule may be failure or loss of efficiency of major unit operations within a TWRS function. The limiting consequence of this type of event is assumed to be replacement of the equipment. The time associated with replacement would include design, procurement, removal of the old equipment, and installation of the new equipment.

Replacement time may lead to system downtime, the primary consequence evaluated. In estimating the system downtimes, several factors were considered, including:

- Complexity and size of the equipment
- Probability that the equipment was designed for easy removal due to its recognized high potential for failure
- Impact of removing and replacing the equipment on overall system operability. (Some equipment may be installed with sufficient redundancy to enable replacement with minimal impact on operations.)

The schedule risk associated with the Baseline Alternative was estimated by multiplying the system downtime by the probability that the equipment would require replacement if only the Baseline Alternative testing were performed. Engineering judgement and experience were used to establish the probabilities. The evaluation of the replacement probability included assessment of various factors, including:

- Previous Hanford Site experience with full-scale use of the unit operation
- Industry experience with the unit operation
- The extent of baseline testing planned for the unit operation.

Schedule risks associated with Alternatives 1, 2, and 3 were calculated by multiplying the Baseline Alternative probability of failure by the probability that the proposed testing for an alternative would identify information that would increase the risk of system downtime due to replacing equipment or a loss of efficiency. Engineering judgement and experience were used to determine the degree to which the testing in Alternatives 1, 2, and 3 would provide critical information beyond that of the Baseline Alternative testing. The probabilities were developed by assessing the magnitude and type of testing planned for Alternatives 1, 2, and 3 against the testing planned for the Baseline Alternative. The potential failure events postulated in determining the Baseline Alternative probabilities and whether pilot-scale testing with actual tank waste as planned in Alternatives 1, 2, and 3 would provide additional information to reduce the chances of the failure were considered. For example, if the risk was perceived to be primarily mechanical, a low probability of finding additional information was assigned because full-scale nonradioactive testing planned in the Baseline Alternative would likely be better-suited for identifying mechanical deficiencies.

Four scenarios were developed to assess the probabilities of the additional testing in Alternatives 1, 2, and 3. These are described below.

- Scenario 1 - The probability that Alternative 1, 2, or 3 would identify a risk-reducing design change under the current Tri-Party Agreement schedule. This probability was assigned a value of 0 if the alternative did not have the ability to complete its testing one year prior to the completion of Title II design. This scenario represents conditions for assumed Alternatives 1a, 2a, and 3a in the cost benefit analysis

discussed later. It was assumed that the Baseline Alternative testing would satisfy the design input requirement supporting Title II design.

- Scenario 2 - The probability that Alternative 1, 2, or 3 would identify risk-reducing information to improve TWRS operations under the current Tri-Party Agreement schedule. It was assumed that testing would continue during TWRS construction, startup, and operations, thereby supporting facility optimization and development of operating procedures.

- Scenario 3 - The probability that Alternative 1, 2, or 3 would identify a risk-reducing design flaw assuming the testing and design schedules are coordinated. This probability is based on the assumption that design would be delayed such that all testing data are available one year before completion of Title II design. This assessment required estimation of the start time and duration of the testing. The estimated start time for testing was based on a facility construction period similar to that presented in Reddick (1994). The duration of the testing period was based on the complexity of testing and the number of tank waste types that would likely be tested. This scenario describes conditions assumed for Alternatives 1b, 2b, and 3b in the cost benefit analysis.

- Scenario 4 - The probability that Alternative 1, 2, or 3 would identify risk-reducing information to support operations under a coordinated testing design schedule. As in Scenario 2, it was assumed that testing would continue during construction, startup, and operations to support facility optimization and development of operating procedures.

Incremental cost impacts were developed under each alternative based on the estimated schedule extension for the four testing scenarios. The cost impacts include the cost associated with the loss of production during the equipment replacement period (primarily the cost of not utilizing plant personnel for waste operations), cost of design, cost of construction/D&D, and the replacement equipment capital costs. The cost of loss of production includes an estimate of the annual percent loss of productive utilization of staff for each of the four functions. The estimate of loss of productive utilization accounted for interim waste feed storage capabilities and interconnections between process functions. The average cost of operations over the life of the function was used to estimate the cost of loss of production during the equipment replacement period. Capital equipment and design costs were estimated using information provided in Boomer et al. (1993). Construction cost (annual crew size) was based on equipment cost. The number of plant operations staff available to support installation of equipment while the facility is inoperable was considered when estimating construction crew size.

Worker risk impacts associated with schedule extension were also estimated. Worker risk estimates were developed for industrial injuries and deaths, transportation injuries and death risks, and deaths due to radiation exposure. The risk calculations include two components: (1) the risk to operations staff during the period of staff utilization loss and (2) the added risk to design and construction staff assigned to the equipment replacement projects. In the first

component, it was assumed that operations staff would be exposed to the same risks as during operations because the staff would likely support replacement and be involved in other maintenance activities. Annual worker risks associated with specific operating functions were multiplied by the percent loss of productive staff utilization for these functions. These risks were combined with design and construction staff risks to provide an overall estimate of the annual worker risks associated with replacement. The annual risks were then multiplied by the durations of schedule extension to provide incremental worker risks. Estimates were made for the four testing scenarios described earlier and summarized as follows: (1) testing supporting only design under the Tri-Party Agreement schedule; (2) testing supporting design, startup, and operations under the Tri-Party Agreement schedule; (3) testing supporting only design under an optimum schedule; and (4) testing supporting design, startup, and operations under an optimum schedule.

The cost and risk impact of schedule delay was determined from the duration of the delay and the operating history of the tank waste safety and operations program. It is assumed that during the period of delay, the only costs and risks not associated with testing are those involved in continuation of waste storage.

4.4 PROCESS MISHAP RISK ASSESSMENT METHODOLOGY

This section provides the risk assessment methodology used to evaluate risks due to process mishaps resulting from process accidents and major maintenance activities. This type of risk is considered additive to the routine worker risks evaluated in Section 4.5. The methodology used for evaluating these risks is the same for both the TWRS operations and the four testing alternatives. The methodology results in a unitless PPG value based on an established WHC system (WHC 1993).

4.4.1 Background Information

Past experience with the type of operations associated with TWRS indicates that nonroutine maintenance operations conducted in response to unanticipated equipment failures can be a significant component of overall worker exposures. In extreme situations, equipment or procedural failures have led to accident sequences that resulted in the loss of hazardous material containment, in turn resulting in acute exposure of workers and/or release of contaminants to the environment. System design criteria generally address the prevention of such failures and/or the mitigation of their consequences. However, a residual risk of equipment or procedural failures leading to accident sequences remains, and will vary between different technologies, system configurations, and environments.

Unlike the calculation of risks associated with routine operations, risks associated with potential failure conditions include the probability of such failure conditions actually occurring, in addition to the probability that exposures and health impacts will result. Standard system safety and safety analysis procedures exist for the identification and evaluation of potential failure events. To be useful, these procedures require that facility and

process information be available. However, this will generally not be the case for these technology evaluations. Therefore, an alternative approach was selected to address worker and public health related impacts associated with potential failure conditions. This approach relies on expert judgement, and the results are expressed as unitless relative risk values derived from selected elements of the PPG (WHC 1993). Because these elements of the PPG are being used outside their original application, their use here is subject to ongoing review.

Qualitative mishap risk factors for each of the system modules or processes are developed separately for "accident mishaps," and for mishaps leading to "nonroutine maintenance" activities. Accident mishaps are defined as those that release energy with the potential to release contamination within the facility and into the environment. Potential acute exposures dominate these types of events. Nonroutine maintenance mishaps are low energy events with limited potential for releasing contaminants. Worker external radiation exposures associated with corrective maintenance dominate these events. The development of qualitative risk factors for accident and nonroutine maintenance mishaps are described in the sections that follow.

Key to the determination of consequences and frequencies is compiling known potential source term information on each module, unit, or process. The general information used to determine TWRS operations source terms is more fully described in Appendix C.

4.4.2 Accident Mishaps

Accident mishap risk factors (PPG values [unitless]) are developed by multiplying the unitless qualitative consequence values with the estimated frequency of occurrence values. Risk factors are first developed at the lowest defined process level (e.g., unit operation level) within each module or function, then evaluated for the module or function as a whole. For accident mishaps the unit operation with the highest maximum accident mishap risk is designated as the limiting event for the module. This recognizes that it is extremely unlikely that energetic accident mishaps, which are themselves generally associated with a sequence of precursor events, will occur within multiple unit operations in a module. For general evaluation purposes, the accident PPG values are also summed to allow general comparisons at the module and function level. Figure 4-2 describes the general logic used for accident PPG value development. Table 4-1 presents the mishap risk factor worksheet formats.

4.4.3 Nonroutine Maintenance

Nonroutine maintenance risk factors are developed by multiplying the unitless qualitative consequence values with the estimated frequency of occurrence values. This is shown in Table 4-1. These risk factors are developed separately for mishaps associated with (1) electrical equipment and instrumentation, (2) mechanized equipment, (3) plugging and caking, (4) corrosion, and (5) physical operations.

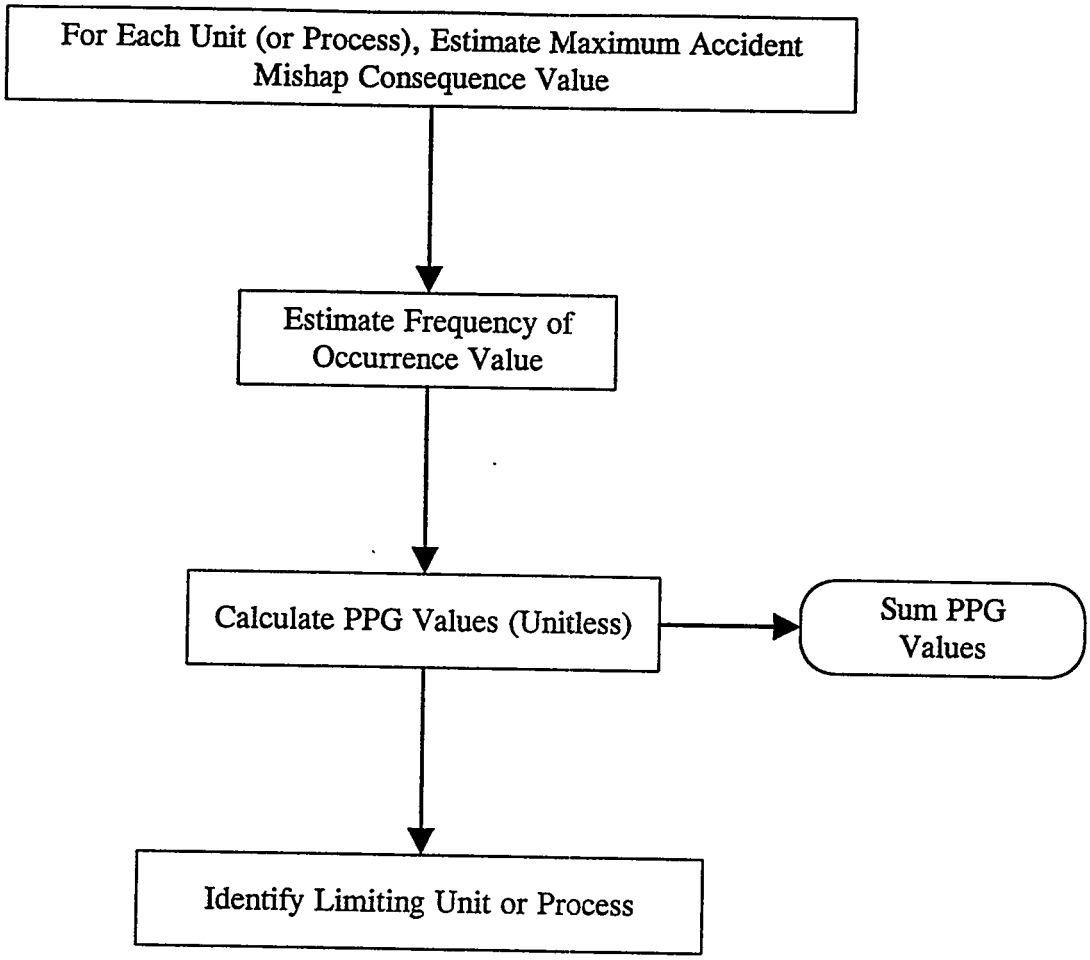

Figure 4-2. Accident Mishap Logic.

Table 4-1. Format for Failure Mishap for Accident and Nonroutine Maintenance Events.

Module Name:

MISHAP RISK PARAMETERS Designation:	Component/Unit Operation Name Waste Desig.	Component/Unit Operation Name Waste Desig.	Component/Unit Operation Name Waste Desig.	Component/Unit Operation Name Waste Desig.	Component/Unit Operation Name Waste Desig.	Component/Unit Operation Name Waste Desig.	Component/Unit Operation Name Waste Desig.	Module Number
MAXIMUM ACCIDENT MISHAP RISK Consequence: Frequency: Relative Risk:								LIMITING EVENT
NONROUTINE MAINTENANCE MISHAP RISKS								SUM OF EVENTS
Electrical Instrumentation Consequence: Frequency: Relative Risk:								
Mechanized Equipment Consequence: Frequency: Relative Risk:								
Pluggage/Caking Consequence: Frequency: Relative Risk:								
Corrosion Consequence: Frequency: Relative Risk:								
Physical Operation Consequence: Frequency: Relative Risk:								
TOTAL NONROUTINE MAINTENANCE RISK Relative Risk:								

Notes:

Accident mishaps are energy release events with the potential to 1) release contamination within the facility and into the environment, 2) damage the equipment and facility, and 3) physically injure workers. These events could include explosion, fire, pressure release, etc.

Nonroutine maintenance mishaps are low energy events with limited potential for releasing contaminants from process systems. These events will lead to increased worker exposures resulting from nonroutine corrective maintenance.

Risk factors are first developed at the lowest defined process level (e.g., unit operation level), then combined for the module or function as a whole. The nonroutine maintenance mishap risks are summed across all unit operations as well as at the module and function level because they are simple independent hardware failures. Figure 4-3 describes the general logic used for nonroutine maintenance PPG value development.

4.4.4 Consequence Values

Consequence values (unitless) have been derived from selected elements of the relative ranking system implemented in the PPG (WHC 1993). The PPG has established eight consequence ranks, within which nine impact attributes are compared. The attributes of interest for this risk evaluation are public safety, worker safety, environmental contamination, and cost. Within each of the eight ranks, the PPG provides consequence descriptions for each of the attributes, and assigns a consequence value. The eight consequence values from the PPG for mishaps are presented in Table 4-2. Due to similarities in their general indicator descriptions, Rank 5 and 6 were combined as Rank 5/6.

A consequence value is selected for each unit operation or nonroutine maintenance action based on expert judgement and comparisons of the unit operation's baseline conditions to general indicator conditions established for each consequence rank.

4.4.5 Frequency of Occurrence Categories

The PPG has established four frequency of occurrence values for consideration with each of the consequence values for both accident and nonroutine maintenance mishaps. For the purposes of this evaluation, five frequency of occurrence values have been established to better differentiate similar risks. The added frequency of occurrence values are labeled "moderately low." These modified frequency of occurrence values are defined as follows:

Very Low	-	highly unlikely to occur within the facility lifetime
	-	frequency value 0.0001
Moderately Low	-	unlikely to occur within the facility lifetime
	-	frequency value 0.001
Low	-	possible to occur within the facility lifetime
	-	frequency value 0.01
Medium	-	likely to occur within the facility lifetime
	-	frequency value 0.1
High	-	anticipated to occur within two years
	-	frequency value 1

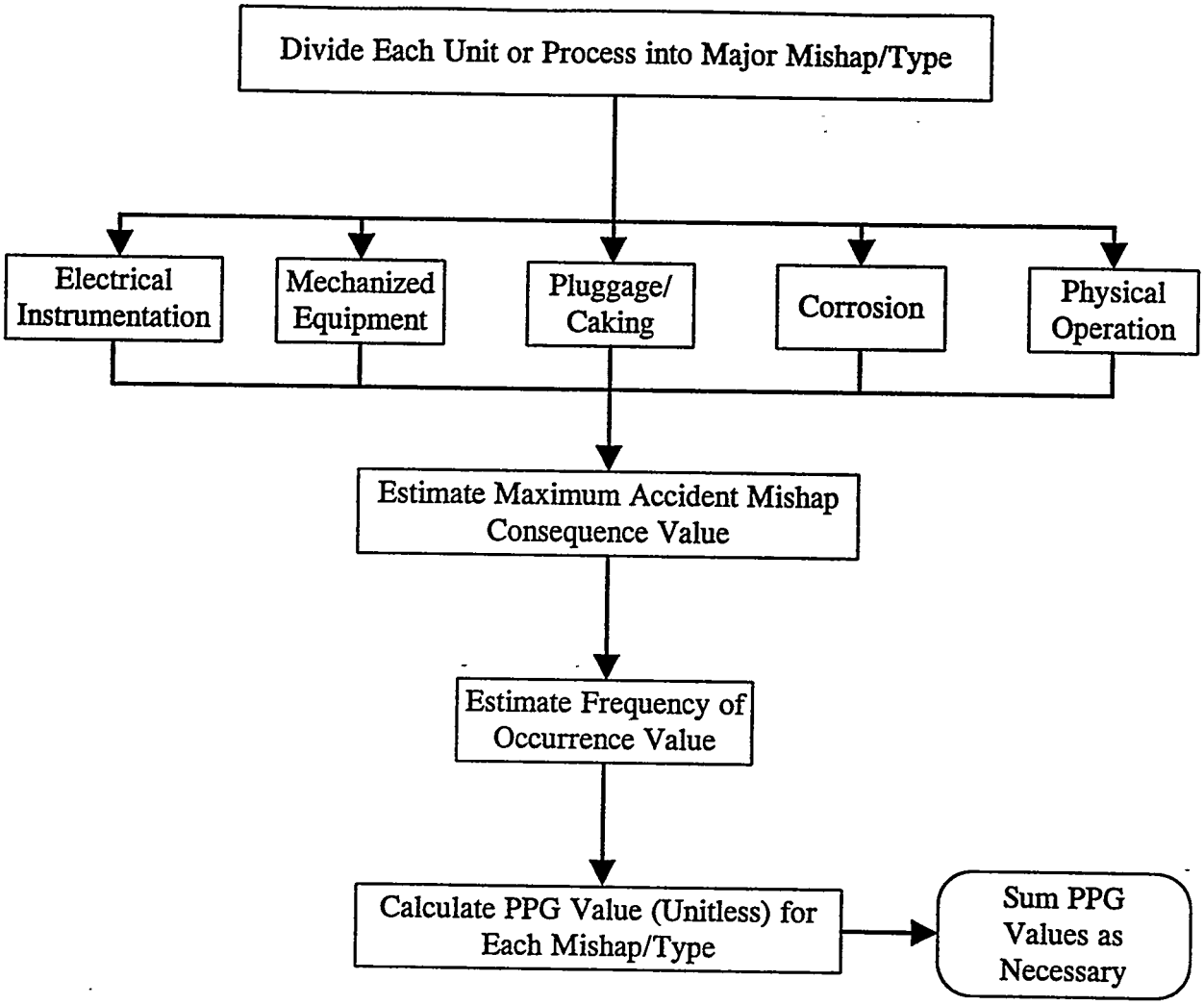

Figure 4-3. Nonroutine Maintenance Mishap Risk.

Table 4-2. Consequence Ranks and Consequence Values.

Attribute	Rank						
	8	7	5/6	4	3	2	1
Public Safety	No impact on public health and safety	Public inconvenience	Low level radiation or chemical exposure	Exposure near limits Moderate injuries	Multiple exposures >100 rem or >>IDLH		Single loss of life
Worker Safety	No impact on worker health and safety	Minor injuries requiring first aid Exposure below limits Removable skin contamination	Exposure >DOE limit Injury with 7 to 70 days lost time	Exposures of 100 rem or >>IDLH Injury with >70 days lost time		Single loss of life (1500) Permanent disability and degraded lifestyle	
Environmental	No releases affecting environment	Reportable releases to environment with no impact	Environmental damage that exceeds regulatory limits Cleanup costs approximately $250K	Cleanup costs >$1M	Environmental cleanup >$100M onsite Cleanup >$25M offsite	Offsite cleanup >$100M, long recovery time	
Cost	Equipment/ facility damage <<$1M Increase operating cost <<$200K		Equipment/ facility damage $1M to $25M Increase operating cost $200K to $5M/year	Equipment/ facility damage >$25M (40) Increase operating cost >$5M/year (40)			
Consequence Values	1	5	25	100	300	1000	3000

A frequency of occurrence value is selected for each unit operation or nonroutine maintenance action based on comparisons of the unit operation's baseline conditions to general indicator conditions established for each frequency category.

4.4.6 Assumptions

Accident and risk assessments during initial planning must include the use of PPG evaluation simplifying and clarifying assumptions. These assumptions include the types of hazards that may result in accidents and injuries, and the quantities of materials that would increase security. The assumptions and basis for these assumptions are described in Section 5.4.

4.5 WORKER RISK

This section provides the risk assessment methodology used to evaluate worker risks due to transportation risks, general operational risks, and radiation. The methodology used for evaluating these risks will be the same for both TWRS operations and evaluation of the four testing alternatives.

Specific assessment methods selected were consistent with the level of information presently available regarding the technology options. This assessment of potential risks to workers is necessarily qualitative, and does not attempt to address all potential risks to worker health and safety. The risk methodology developed in this section is based primarily on national and Hanford Site developed general statistics.

The specific methods and data used to estimate worker risks associated with transportation to and from the work site, physical hazards during work site operations, and external exposure to ionizing radiation are discussed in the following sections.

4.5.1 Worker Transportation Risks

Transportation risks are defined as physical injuries and fatalities associated with the incidence of vehicular accidents during travel to and from the work site. Risks associated with vehicular transportation within the work site are addressed in Section 4.4. The risks of injury and fatality associated with vehicular transportation were calculated using risk factors based on statistics compiled by the U.S. Department of Transportation. These risk factors, in units of injuries per mile traveled and fatalities per mile traveled are shown in Table 4-3. The risks of injury and fatality were estimated by multiplying these factors by the total estimated distance traveled. Distance traveled was estimated based on expected miles traveled per year per category of worker. The logic used for this methodology is shown in Figure 4-4.

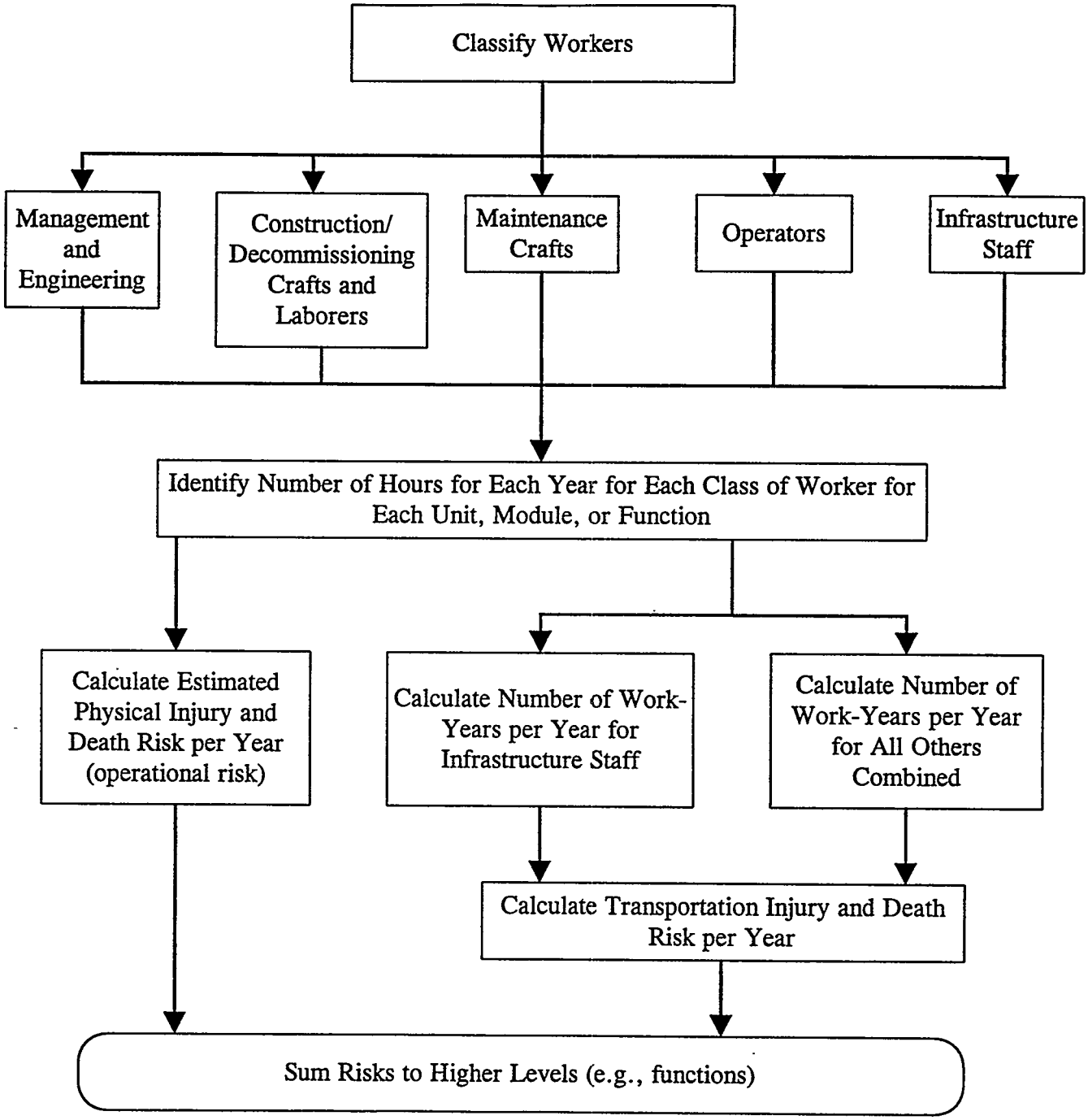

Figure 4-4. Physical Injury and Transportation Risk.

Table 4-3. Unit-Risk Factors for Vehicular Transportation.

Risk	Population Zone		
	Suburban	Rural	Weighted Average[a]
Fatalities per mile	2.0×10^{-9}	8.1×19^{-9}	6.06×10^{-9}
Injuries per mile	7.02×10^{-9}	1.51×10^{-8}	1.24×10^{-8}

[a] Weighted average assuming 33% suburban plus 67% rural risk factors.

For the purpose of this evaluation, workers and work activities associated with implementation of the technology options are categorized. This allows a more accurate estimation of total risk. The worker categories are as follows:

- Management and Engineering. These workers provide supervision, design, and engineering support. The work environment is assumed to be typical of an indoor office setting, with periodic visits to the field site/facility.

- Construction/D&D Crafts and Laborers. These workers provide the construction, excavation equipment installation, and heavy equipment operations. The work environment is assumed to be typical of outdoor construction/earth moving and large facility construction projects. In the case of certain subsurface barrier technology options, the work environment may be similar to that of surface mining sites.

- Maintenance Crafts. These workers provide equipment and system repair and preventive maintenance. Typical craft-labor categories are millwright, pipefitter, and electrician. The work environment is assumed to be typical of that of operating radiological process facilities on the Hanford Site.

- Operators. These workers conduct routine facility operations and monitoring. Typical craft-labor categories include power-operator, nuclear-operator, and technician. Other onsite staff include test engineers and health physics technicians. The work environment is assumed to be typical for that of operating radiological process facilities on the Hanford Site.

- Infrastructure Staff. These workers provide indirect infrastructure support to the operating facilities. Infrastructure staff typically work in offices in Richland; therefore, their exposure to risks common in operating facilities is limited. Typical worker categories include accountants, purchasers, and human resource specialists.

4.5.2 Worker Operational Risks

Operational risks are defined in terms of the injuries and fatalities associated with exposure to physical hazards in the work environment. The logic for determining operational risks is

provided in Figure 4-4. For the purpose of this evaluation, injuries are defined as any reportable nonfatal injury or illness, with or without associated lost work time. The risks of injuries and fatalities associated with physical hazards in the work environment were estimated using factors based on statistics compiled by the DOE for its operations (DOE 1987), by the National Safety Council (NSC) for commercial industries in the United States (NSC 1987, 1988, 1989, 1990, 1991), and by statistics provided by WHC and WHC-Kaiser. These factors are based on general risks and do not address the strong influence of specific work environments and activities on overall risk. The PPG relative risk values, as described in Section 4.4, address worker and other risks due to work environment and activity.

A summary of the injury and fatality risk factors for each worker category, in units of injuries/person-year worked and fatalities/person-year worked, is presented in Table 4-4. Single factors are presented for management and engineering workers, based on statistics compiled by the NSC for the "services" industry. The injury factors for construction/D&D crafts, maintenance crafts, and operators were based on actual rates for these classes of workers at the Hanford Site. Although only a few years of data were provided, the injury rates were relatively consistent each year and were considered more representative than national statistics. National statistics were used for fatalities because the low rates require a much larger population base to ensure better statistical significance. The fatality rates for construction/D&D are based on statistics compiled by the NSC for construction industries. The NSC statistics were compiled for the period 1985 to 1990. Maintenance crafts and operators fatality rates were based on statistics compiled by the DOE for its operating sites during the period 1976 through 1981 (DOE 1982). The risk to infrastructure staff from these operations was considered negligible, and as a result, no operations-caused injury and fatality statistics were developed for this worker category.

Table 4-4. Operational Risk Factors.

Workers	Injuries/Person-Year	Fatalities/Person-Year
Management and Engineering	0.028	0.00005
Construction/D&D Crafts and Laborers	0.100	0.00035
Maintenance Crafts	0.055	0.000045
Operators	0.041	0.000045

The collective work force risks of injury and fatality were estimated by multiplying these factors by the person-years in each worker category. The work force requirements are described in Section 5.5.1, while the application of the risk factors in estimating operational risks associated with the technologies is discussed in Section 4.3.

4.5.3 Worker Routine Radiation Risk

Radiation risk is defined as the incremental increase in lifetime risk of fatality from cancer (cancer risk) as a result of external exposure to ionizing radiation. Individual cancer risk is calculated as the product of annual external radiation dose (rem), multiplied by a cancer risk conversion factor (risk/rem per year). Collective cancer risk is calculated as the product of individual cancer risk multiplied by the number of exposed individuals. Doses to workers are estimated based on category of worker (e.g., maintenance craft), expected radionuclide concentrations in the work area, and WHC as low as reasonably achievable (ALARA) practices and administrative limits. The general logic used for determining worker routine radiation risk is provided in Figure 4-5.

The cancer risk conversion factor used in this evaluation is 2.5×10^{-4} rem^{-1} (NRC 1990). The annual external radiation doses to workers and assumptions are discussed in Section 5.5.1, and the application of the risk factor in estimating the cancer risks associated with the technologies is discussed in Section 4.3. This radiation risk methodology does not address significant exposures due to accident conditions. Accidental exposures are addressed in Section 4.4.

4.6 PUBLIC RISK ASSESSMENT METHODOLOGY

Release of contaminants from the Hanford Site SSTs and DSTs may result in public health risks. The primary release paths are direct airborne discharges and tank leakage to the groundwater. For this assessment, direct airborne releases were not evaluated because: (1) the normal path to air (e.g., tank ventilation) if filtered to prevent significant releases, (2) the potential for an accident to cause an unfiltered release is very low resulting in very little, if any, differences in the various scenarios under evaluation, (3) the total release potential and consequences are not significantly affected by the scenarios. Leakage to groundwater was evaluated because there is a history of leaking SSTs. This leakage would increase public health risk if groundwater contamination occurred and human consumption was involved. The probability of leakage of waste from tanks would increase if retrieval of wastes from the tanks were postponed, due to the effects of corrosion and physical stresses on the tanks.

This section describes the approach used to estimate the public health impacts of leakage due to postponement of retrieval. The approach involves: (1) assessing the rate of generation of new leaks in SSTs, (2) estimating the volume of leakage expected to occur during sluicing of leaking tanks, (3) selecting constituents of concern (COCs), (4) estimating the fraction of COCs in the leaked waste, (5) defining the physical setting of a hypothetical tank farm, (6) selecting a transport-risk model, (7) estimating transport of the COCs to a well, and (8) projecting the carcinogenic and noncarcinogenic risks to the hypothetical MEI who would use the contaminated groundwater.

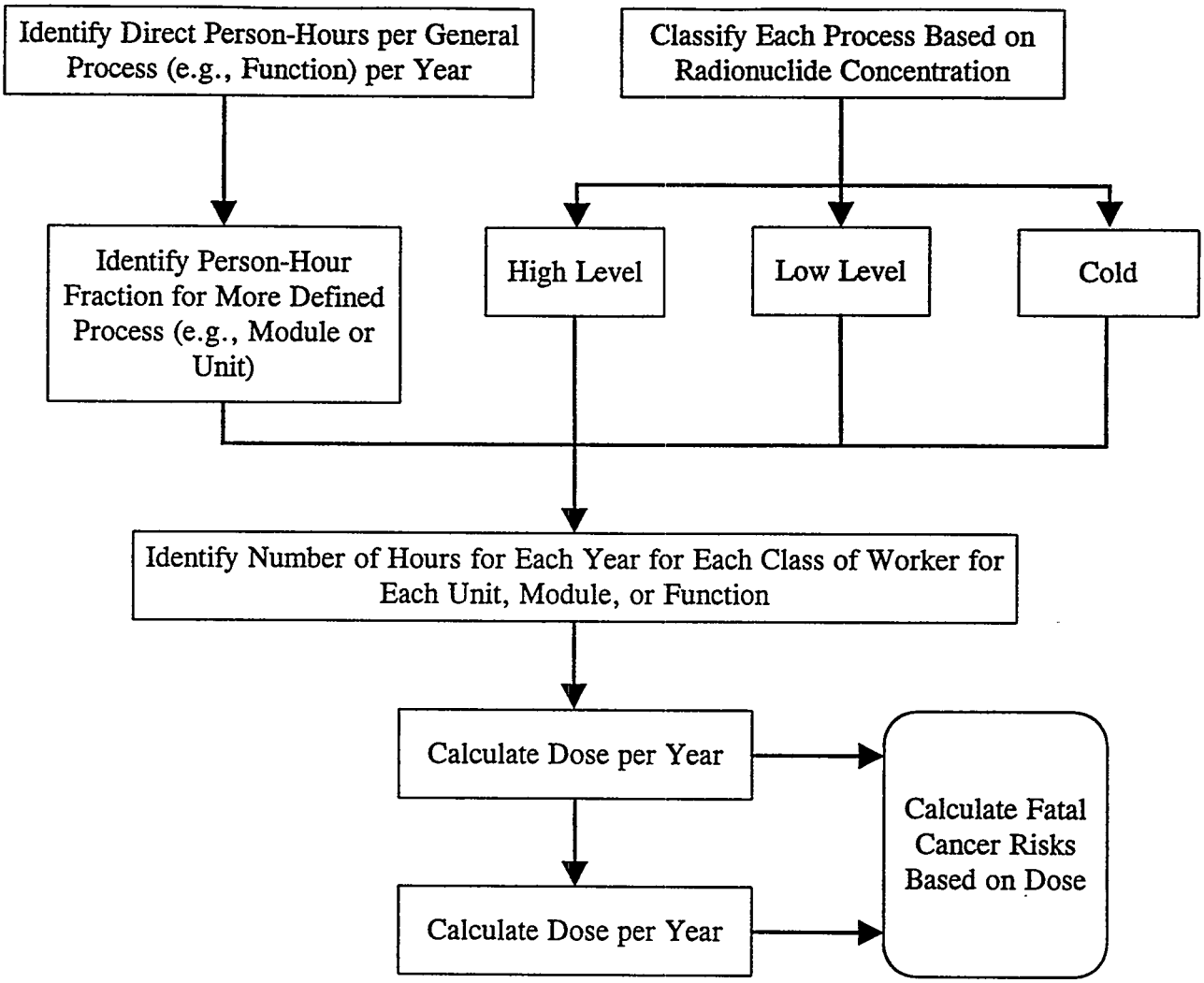

Figure 4-5. Worker Routine Radiation Risk.

4.6.1 SST Leak Generation Rate

The rate of generation of new leaks in SSTs was estimated using data provided in Hanlon (1994). The data were used to develop a plot of the number of leaking SSTs versus years of tank service (Figure 4-6). The number of new leaks expected over time can be estimated by extrapolation. The extrapolated leakage rate shown in Figure 4-6 is 2.0 tanks per year, i.e., if the baseline sluicing schedule were delayed by 10 years, the number of newly leaking tanks would be increased by approximately 20. New leakage within any one of the 12 SST farms would average 0.17 per year; therefore, a leakage rate of 0.17 new tanks per year per tank farm was assumed for the analyses in this report.

4.6.2 Volume of Expected Leakage

Lowe (1993) estimated that a leak of up to 150,000 L (40,000 gal) could occur during new sluicing operations. The most likely leak mechanism is the flow of liquid waste through a hole in the mild steel tank liner and then to the soil through the cold joint between the vertical and horizontal members of the tank's concrete structure. Leakage of 150,000 L (40,000 gal) per tank was assumed for the analyses in this report. In comparison, the largest SST leak observed to date was a 437,000-L (115,000-gal) leak from Tank 241-T-106 (Hanlon 1994).

4.6.3 Constituents of Concern

The full spectrum of COCs known or expected to be contained within the underground storage tanks includes more than 150 chemicals and radionuclides. To simplify the evaluation, a shorter list of COCs was developed. These include the constituents that contribute most of the risk to human health. For the purposes of developing the list of COCs, the *Single-Shell Tank Constituent Rankings for Use in Preparing Waste Characterization Plans* report (Droppo et al. 1991) was reviewed. That report provided an analysis and ranking of tank waste constituents based on risk to human health. Droppo et al. (1991) evaluated risks, based on leakage and transport to groundwater and human health exposure through ingestion and use of groundwater for irrigation, using the Multimedia Environmental Pollutant Assessment System (MEPAS). The MEPAS is a computer-based system that can be used to quantify relative human health impacts from radiological and chemical contaminants released to the environment.

Table 4-5 lists the constituents that were determined in that study to result in a carcinogenic risk greater than 1×10^{-6}, or a noncarcinogenic hazard index (HI) greater than 1 at recharge rates of 10 cm/yr (4 in/yr). A separate evaluation of these constituents was also performed as part of this study using the MEPAS code. The results of this second evaluation are also presented in Table 4-5. The list of COCs derived in the second evaluation is shorter, but generally consistent with the results obtained by Droppo et al. (1991).

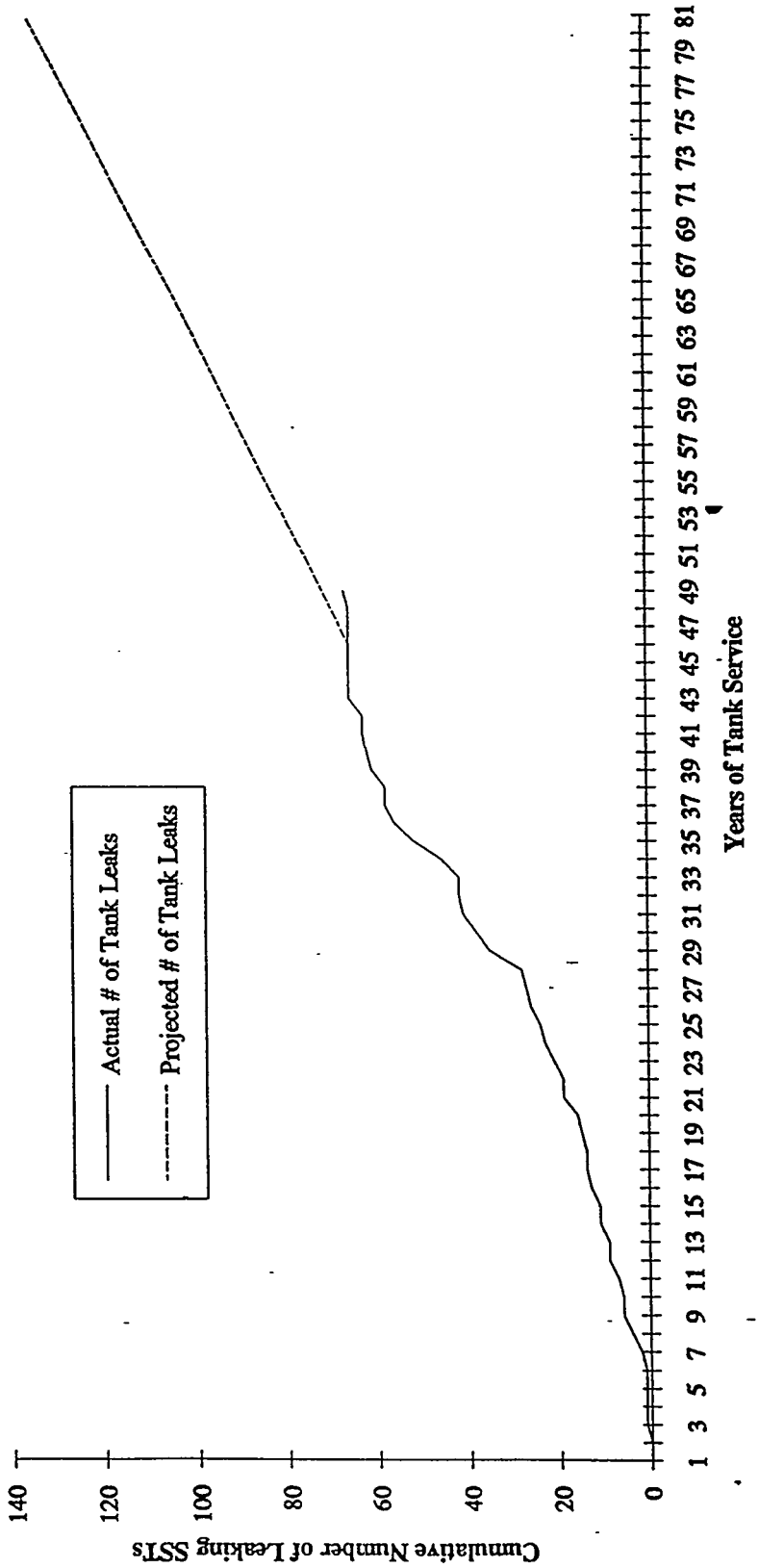

Figure 4-6. Rate of Development of New Tank Leaks.

Table 4-5. Comparison of Constituent Rankings.

Constituent Rankings			
Droppo et al. (1991)		This Study[a]	
Carcinogens[b]	Noncarcinogens[c]	Carcinogens	Noncarcinogens
As	Sb	^{14}C	Sb
^{238}U	EDTA	^{99}Tc	Nitrate
^{99}Tc	Hg	^{238}U	V
^{14}C	NO_2	^{129}I	Nitrite
^{129}I	V	^{241}Am	Cr
^{235}U	Cr		F
^{242m}Am	Be		
^{240}Pu	NO_3		
^{239}Pu	Na		
^{238}Pu	F		
^{234}U	SO_4		
^{241}Am	CN		
^{242}Cm	Cu		
^{237}Np			
^{233}U			
^{241}Pu			
^{93m}Nb			

[a] Derived using MEPAS
[b] Only constituents that were determined to have a risk greater than 1×10^{-6} are included on this list.
[c] Only constituents with an HI of greater than 1 are included on this list.

Neither evaluation addressed organic constituents that are known or suspected to be present within the tank wastes except for ethylenediaminetetraacetic acid (EDTA). The organic constituents in the tanks have been estimated in the Hanford Defense Waste Environmental Impact Statement (HDW-EIS) (DOE 1987). Included in the HDW-EIS evaluation are approximately 40 organic chemicals in neutralized cladding removal wastes, double-shell slurry wastes, and organic complexant wastes. The types of organic chemicals identified include solvents, volatiles, chelating/complexing agents, and acids. However, inspection of

the list of chemicals revealed that many of these constituents may no longer be present in the identified form as a result of chemical interactions with each other or with the inorganic materials within the tanks. Furthermore, from the list of organic constituents above the detection limit identified in tank wastes, only EDTA and tributyl phosphate (TBP) have known toxicity values. A shortened list of COCs representing approximately 90% of the carcinogenic and noncarcinogenic risk was selected for analysis (Table 4-6). The list also includes EDTA and TBP.

Table 4-6. Constituents of Concern Evaluated in the Risk Model.

Radionuclides	Chemicals
^{14}C	Nitrate
^{99}Tc	Nitrite
^{129}I	TBP
^{238}U	EDTA

4.6.4 Composition of COCs

The fraction of COCs in leaked waste was estimated using analyses of drainable liquid obtained from SSTs. Analytical data for drainable liquids were reported in Schultz (1978), Weiss (1986), and Weiss and Schull (1988a through 1988i). The averages of these data were used to represent the compositions of all COCs except TBP and EDTA. For these waste species, it was assumed that their fractions are relative to the ratio of their maximum masses in a single tank (DOE 1987) to the average mass of nitrate in an SST (Boomer et al. 1993). The assumed COC fractions are shown in Table 4-7.

4.6.5 Release Setting

A hypothetical SST farm comprising twelve, 3.8 x 10^6-L (1-Mgal) tanks was selected for modeling relative risk through the groundwater pathway. The tank farm was assumed to exist in a three by four array with each of the 22.9-m (75-ft) diameter tanks on 30.5-m (100-ft) centers. The base of each tank was assumed to be 15.3 m (50 ft) belowgrade. New leaks were assumed to be released at this depth. The plan dimensions of the tank farm were 83.9 x 114 m (275 x 375 ft), which yielded a surface area of 9,580 m^2 (103,000 ft^2). This area defined the assumed capture zone for precipitation which was assumed to recharge through a surface barrier before contacting contaminated media associated with the leaks. The contaminants mobilized by the recharge water were assumed to be transported to the groundwater where they were subsequently drawn into a well used for drinking water, irrigation, and other uses. Geologic media and aquifer data used in the analysis were obtained from Schramke et al. (1994). These data are summarized in Table 4-8.

Table 4-7. Assumed Fractions of Constituents of Concern.

Constituent of Concern	Fraction
Nitrate	144 g/L
Nitrite	26 g/L
TBP	0.019 g/L
EDTA	0.027 g/L
^{14}C	1.1×10^{-6} Ci/L
^{129}I	2.1×10^{-7} Ci/L
^{99}Tc	1.4×10^{-4} Ci/L
^{238}U	1.4×10^{-7} Ci/L

Table 4-8. MEPAS Input Parameters for Geologic Media Characteristics*.

Parameter	Partially Saturated Zone			Saturated Zone
	Layer 1	Layer 2	Layer 3	
Soil classification	Sand	Sand	Sand	Loamy sand
Sand content (%)	90	95	90	83
Silt content (%)	9	3	9	11
Clay content (%)	1	2	1	6
Organic matter content (%)	0	0	0	0
Iron and aluminum content (%)	2	2	2	0
pH of pore water	8.5	8.5	8.5	7.7
Thickness (ft)	33	164	62	18
Bulk density (g/cm^3)	1.76	1.6	1.76	1.64
Total porosity (%)	36	42	36	18
Field capacity (%)	19	8.5	19	NA
Longitudinal dispersivity (ft)	0.33	1.64	0.62	16.4
Saturated hydraulic conductivity (cm/s)	4.34	14.2	4.34	NA

* All values are taken directly from Schramke et al. (1994).

4.6.6 Fate/Transport/Risk Model Selection

The MEPAS code (Droppo et. al 1991) was used to model contaminant transport through the vadose zone and aquifer and to estimate the relative magnitude of human exposure to those contaminants based on the assumed withdrawal and use of the groundwater. This one-dimensional model, which is still being developed, has not yet been adopted for quantitative baseline risk analyses at the Hanford Site (DOE 1993), but is suitable for the type of screening-level analysis reported in this study. Other U.S. Environmental Protection Agency (EPA) approved models are currently deemed appropriate for quantitative baseline risk analyses. The MEPAS was selected for this application over other models and codes because of its versatility and ability to be used cost-effectively in this type of application.

The MEPAS code employs a nontraditional approach of integrating all major exposure pathways into a single public health computational tool. It couples radiological and nonradiological contaminant release, migration, and fate for environmental media with exposure estimates for the major exposure routes. The MEPAS code uses empirical, analytical, and semi-analytical mathematical algorithms to model the following processes:

- Potential release of contaminants into the environment
- Transport of contaminants through and between multiple environmental media
- Exposure to surrounding human populations through the following exposure pathways: ingestion of water and food products, inhalation, dermal contact, and external radiation (Note: inhalation, dermal contact, and external radiation were not modeled in this analysis.)
- Human health effects associated with exposure to chemicals and radionuclides.

The MEPAS code Version 3.0g was selected to evaluate contaminant transport and relative human health risks associated with time-dependent leakage. The MEPAS code calculates contaminant concentrations in the dispersive layer formed on the surface of the aquifer as contaminated water advects from the vadose zone to the aquifer. The relatively high concentrations of contaminants that would result in this initially thin layer would gradually decrease as contaminants disperse into the aquifer while flowing downgradient. This code normally employs a three-dimensional advective-dispersive equation to describe the migrating plume as it disperses and attenuates through the saturated aquifer. The saturated aquifer modeling equation was not used in this analysis. The MEPAS code was modified to better predict concentrations most likely to be experienced by a user of a well located close to the hypothetical tank farm.

In the event a well is located immediately downgradient from a waste site, as assumed in this analysis, the well intake (screened interval) may or may not be exposed to the thin contaminated water layer. If the screened interval were located substantially below the surface of the aquifer, only uncontaminated water would be drawn into the well. If the screened interval were assumed to be located near the aquifer surface, as appropriate for a

conservative analysis, contaminated water would be drawn into the operating well, but it would be diluted with uncontaminated water also drawn into the well. Normally, MEPAS does not account for this dilution effect. Therefore, using the unmodified MEPAS code to calculate groundwater contaminant concentrations immediately downgradient of the source would result in no risk for a deep well or an overly conservative and unrealistically high estimate of relative risk for a shallow well.

A more appropriate method to calculate the relative risks for well water drawn near the hypothetical tank farm was used by Blanchard et al. (1993). They used the following equation to estimate well water concentrations for a scenario in which water would be pumped from a well located 100 m (328 ft) downgradient of a proposed grout disposal facility at the Hanford Site:

$$W_{\mu} = F_i r_v / r_p \qquad \text{(Eq. 1)}$$

Where:

W_{μ}	=	well-intercept factor, i.e., the ratio of the concentration of a contaminant in the well water to its concentration in the vadose zone water (unitless)
F_i	=	fraction of plume intercepted by the operating well (unitless)
r_v	=	volumetric recharge rate through waste site (L^3/T)
r_p	=	groundwater well pumping rate (L^3/T).

Blanchard et al. (1993) used the groundwater model, Single Layer Analytical Element Method-Stratified (SLAEMS), to estimate the width of interception of the contaminated water plume by a well located 100 m (328 ft) downgradient of the grout disposal site. The well pump was assumed to withdraw water at a rate of 45 m^3/day (1,600 ft^3/day) via a 4.6-m (15-ft) long screened interval positioned near the water table. This water withdrawal rate was used to simulate drinking water and irrigation needs for a 2-ha (5-acre) farm.

The SLAEMS model predicted a plume interception width of approximately 61 m (200 ft) based on the assumption of a fully penetrating well and aquifer properties assumed to exist near the grout disposal facility. When a partially penetrating well was assumed, the computed intercept width increased to 83.2 m (273 ft) for isotropic conditions and to 113 m (371 ft) for anisotropic conditions.

The surface dimensions of the hypothetical tank farm that served as the basis for this analysis were 84 by 114 m (275 by 375 ft). If the tank farm is assumed to be oriented longitudinally

with the direction of groundwater flow and a partially penetrating well is assumed, 100% of the plume width (84 m [275 ft]) would be intercepted by the well. This conservative assumption was made for the hypothetical tank farm in this analysis.

Vadose zone contaminant concentration data are required to apply Equation 1. The vadose zone flux (f) can be expressed as:

$$f = C_v r_v \qquad \text{(Eq. 2)}$$

Where:

C_v = concentration in vadose zone (M/L^3)

r_v = volumetric recharge rate through waste site, as previously defined (L^3/T).

The well intercept factor (W_μ) in Equation 1 can also be expressed as shown below, in accordance to the definition of W_μ:

$$W_\mu = C_g/C_v \qquad \text{(Eq. 3)}$$

Where:

C_g = concentration in the groundwater (M/L^3).

Thus, the well intercept factor can be restated as:

$$W_\mu = C_g r_v/f = F_i r_v/r_p \qquad \text{(Eq. 4)}$$

Because F_i is 1.0 and r_p is 45 m^3/day (1,600 ft^3/day) as assumed previously, the groundwater concentration is given by the following intuitive equation:

$$C_g = f \div 45\ m^3/day \qquad \text{(Eq. 5)}$$

4.6.7 Transport of COCs

The COCs released from the hypothetical tanks were assumed to be mobilized vertically to the groundwater by advective-dispersive processes. A recharge rate of 0.05 cm/yr (0.02 in/yr) was assumed, which corresponds to the expected maximum recharge through the Hanford Permanent Isolation Surface Barrier (Gee et al. 1993). Leaked wastes were assumed to be mobilized by recharge that would occur over the entire area of the hypothetical tank farm.

4.6.8 Human Exposure and Health Risk

The relative magnitude of human health risks was evaluated based on assumed exposure to contaminated groundwater at the point of interest immediately downgradient of the hypothetical tank farm. Pathways by which contaminants were assumed to reach and expose a hypothetical individual at that location, based on the standards used at the Hanford Site, include:

- Drinking water ingestion
- Crop ingestion from farmland contaminated by irrigation from groundwater
- Animal product ingestion from animals fed contaminated forage and groundwater.

The pathway analysis was based on the assumption that water would be distributed half of the time and applied at a rate of 100 L/m^2 of irrigated land per month. The exposure analyses were based on an assumed 70-year lifetime exposure of a MEI weighing 70 kg (154 lb) to constant groundwater contaminant concentrations which are based on the average value over the 70-year period. The MEPAS code provides output data in the form of risk values for radionuclides and chemical carcinogens and reference dose (RfD) ratios for noncarcinogenic chemicals. These values were computed only for the 70-year lifetime period during which the maximum groundwater concentration is calculated and assumed to remain constant. Groundwater concentrations and geological strata flux rates were computed for a specified time interval. For this evaluation, 40 time steps were selected, resulting in time periods in increments of 750 years for a recharge rate of 0.05 cm/yr (0.02 in/yr). Groundwater concentrations and geological strata flux rates were computed for all time intervals evaluated. These output values were used in combination with risk conversion factors and saturated zone dilution factors for each contaminant to compute risk or HI values for each time interval evaluated. The risk conversion factors given in Table 4-9 were computed from the MEPAS output and intermediate data files as shown below.

Table 4-9. Inventory Distribution and Risk Conversion Factors of COCs in Tank Waste.

Constituent of Concern	Distribution of Inventory in 149 Tanks (kg or Ci)	MEPAS Slope Factor $(mg/kg\text{-}day)^{-1}$	MEPAS RfD (mg/kg-day)*	Risk Conversion Factor $[(g/mL)^{-1}$ or $(Ci/mL)^{-1}]$
Nitrate	9.7E+07		1.6E+00	7.5E+05
Nitrite	4.8E+06		3.4E-02	6.7E+05
EDTA	1.7E+04		1.3E-03	3.2E+08
TBP	1.5E+04	0.0E+00 (inh) 7.9E-03 (ing)		4.1E+02
C^{14}	3E+03	6.4E-15 (inh) 9.0E-13 (ing)		2.5E+08
I^{129}	2.4E+01	1.2E-10 (inh) 1.9E-10 (ing)		1.5E+10
Tc^{99}	1.6E+04	8.3E-12 (inh) 1.3E-12 (ing)		1.5E+08
U^{238}	4.6E+02	5.2E-08 (inh) 2.8E-11 (ing)		1.9E+09

* RfD values for COCs are the same for both ingestion and inhalation exposure pathways

$$RCF_i = \frac{Risk_i}{C_{gw,i}} \qquad \text{(Eq. 6)}$$

$$RCF_i = \frac{HI_i}{C_{gw,i}} \qquad \text{(Eq. 7)}$$

Where:

RCF_i = risk conversion factor for constituent i $[(g/mL)^{-1}$ or $(Ci/mL)^{-1}]$

$Risk_i$ = risk value computed by MEPAS for constituent i for the maximum groundwater concentration

HI_i = hazard index (or RfD ratio) computed by MEPAS for constituent i for the maximum groundwater concentration

$C_{gw,i}$ = maximum groundwater concentration computed by MEPAS for constituent i [(g/mL) or (Ci/mL)]

Peak relative health risks (cancer risk and HI) were calculated as the product of maximum contaminant groundwater concentration and unit-concentration risk and HI factors derived using MEPAS. Relative health risks were evaluated separately for exposure to carcinogenic and noncarcinogenic materials. Carcinogenic health risk was expressed as the incremental lifetime cancer risk to an individual from exposure to radioactive contaminants and nonradioactive carcinogenic chemicals in the leaked waste. The relative impact on an individual from exposure to noncarcinogenic toxic chemicals was evaluated by calculating the HI ratio of the calculated exposure level (dose) to a toxic threshold reference dose. An HI less than 1 is taken to indicate the probable absence of detrimental toxic effects.

4.7 COST BENEFIT ANALYSIS METHODOLOGY

The cost benefit methodology used in this study is based on costs, schedule risks, normal worker risks, risks from industrial mishaps, and public health risks. This section identifies the relationship between these risks and stakeholder values defined in key TWRS studies and guidance documents. This section also describes the methodology used for relating these diverse risks, enabling their combination to define an overall benefit. The overall benefit is used to calculate cost benefit.

4.7.1 Relationship Between Stakeholder Values and Risks

Stakeholder values relevant to the TWRS program are shown in Table 4-10. These values were derived from stakeholder values embedded in key guidance and decisional documents relevant to the TWRS program. Among the most relevant documents considered were the *Future Land Use Study* and the *Hanford Tank Waste Task Force Study*. In addition, several other documents were reviewed for value-relevant information, including the *Defense Waste Remediation Program Redefinition Study*, the *TWRS Decision Analysis Report*, and the *Washington State Department of Ecology Policy Guidance for Hanford Environmental Restoration and Waste Management*.

The values in Table 4-10 are grouped into "ends," "means," and "process" values. Ends values are related to the quality of the results of remediation, means values are related to the quality of the technical methods used for obtaining remediation results, and process values are related to the quality of management methods for achieving successful remediation. In numerous cases, the stakeholder values afford no ability for discrimination among the four alternatives. These values and an explanation of the lack of distinction among the alternatives, is provided below.

Table 4-10. TWRS Stakeholder Values.

Ends Values
• Protect public health and safety • Protect worker health and safety • Protect the Columbia River • Protect the environment • (Clean up to the level necessary to) enable future use options to occur • Capture economic development opportunities locally • Protect rights of Native American Indians • Ensure compliance • Enhance technology development • Reduce cost

Means Values
• Deal realistically and forcefully with groundwater contamination • Clean up areas of high future use value • "Get on with the cleanup" to achieve substantive progress in a timely manner • Use the central plateau wisely for waste management • Transport waste safely and be prepared • Do no harm during cleanup or with new development • Improve waste management • Use mature technologies

Process Values
• Involve the public in future decisions about the Hanford Site • Use a systems design approach that keeps end points in mind as intermediate decisions are made • Establish management practices that ensure accountability, efficiency, and allocation of funds to high priority items • Enhance public acceptance • Use open and fair processes • Increase efficiency

1. Clean up to the level necessary to enable future use options to occur. Each alternative would achieve the same cleanup level; thus, there is no distinction among alternatives with respect to this value.

2. Capture economic development opportunities locally. Each of the alternatives would involve testing, design, construction, and operation of essentially the same TWRS technologies. Although the alternatives vary in the cost of testing; it is unlikely that potential new business created outside the Hanford Site would vary significantly.

3. Protect rights of Native American Indians. Each of the alternatives would achieve the same overall cleanup objectives; thus, there is no apparent distinction among alternatives.

4. Ensure compliance. Each alternative would achieve the same cleanup objectives within the limits of Federal, State, and local regulations.

5. Enhance technology development. Each alternative would utilize the same technologies. Although alternatives that involve more costly testing may enhance technology performance in the TWRS application, they would not differ significantly in the degree of development of the technologies for other applications.

6. Clean up areas of high future use value. Each alternative would achieve the same level of cleanup; thus, no distinction is apparent.

7. Use the central plateau wisely for waste management. Each alternative would achieve the same levels of cleanup on the central plateau; thus, no distinction is apparent.

8. Transport waste safely and be prepared. Each alternative would transport the same volumes and types of waste under the same controls to ensure protection of the environment; thus, no distinction is apparent.

9. Improve waste management. Each alternative would employ the same technologies to achieve the same cleanup objectives; thus, no distinction is apparent.

10. Use mature technologies. The same mature technologies would be used in each alternative; thus, no distinction is apparent.

11. Process values:

    - Involve the public in future decisions about the Hanford Site
    - Use a systems design approach that keeps end points in mind as intermediate decisions are made

- Establish management practices that ensure accountability, efficiency, and allocation of funds to high priority items
- Enhance public acceptance
- Use open and fair processes
- Increase efficiency.

Each alternative would employ the same management systems and approaches to achieve the same cleanup objectives; thus, there is no basis for discrimination among alternatives.

Each of the remaining values affords the ability to discriminate among alternatives in terms of different risk or cost measures. These risk and cost measures include schedule risks, routine worker risks, risks from industrial mishaps, public health risks, and/or costs, as shown in Table 4-11. A discussion of the relevance of these risks to the retained values follows.

Schedule risks adversely impact all values. For example, the additional operating time required to accommodate schedule risks and achieve cleanup objectives would probably result in additional tank leakage entering the groundwater. This would increase public health risks as a consequence of contaminating the groundwater underlying the Hanford Site. Schedule risks would also increase the number of worker person-years required to achieve cleanup which would result in additional costs, worker deaths, and injuries. Schedule risks may also have an adverse impact on process mishap risks (accidents and major maintenance risks) because increased operating time results in opportunities for mishaps to occur.

By definition, routine worker risks adversely impact the end stakeholder value "Protect worker health and safety." Process mishap risks also adversely impact "Protect worker health and safety" and may adversely impact "Protect public health and safety," "Protect the Columbia River," "Protect the environment," "Deal realistically and forcefully with groundwater contamination," " 'Get on with the cleanup' to achieve substantive progress in a timely manner," and "Do no harm during cleanup or with new development." Public health risks adversely impact the same end and means stakeholder values. By definition, costs adversely impact the end stakeholder value "Reduce cost." Thus, the attractiveness of the four alternatives and their variations relative to these eight discriminatory values can be evaluated in terms of the differences in cost and the four types of risks.

4.7.2 Relative Risk

This study measures schedule risks, normal worker risks, process mishap risks, public health risks, and costs for the four alternatives and their variations. The relative benefit of different measured risks within a given risk category (e.g., worker risk) is assumed to be inversely proportional to the ratios of the measured risks. For example, an alternative that causes five

Table 4-11. Relationship of TWRS Values, Risks, and Costs.

Retained TWRS Value	Schedule Risk	Worker Risk	Public Health Risk	Process Mishap Risk	Cost
Protect public health and safety	X		X	X	
Protect worker health and safety	X	X		X	
Protect the Columbia River	X		X	X	
Protect the environment	X		X	X	
Reduce cost	X			X	X
Deal realistically and forcefully with groundwater contamination	X		X	X	
"Get on with the cleanup" to achieve substantive progress in a timely manner	X	X			
Do no harm during cleanup or with new development	X	X	X	X	

deaths is considered to have twice the relative benefit (in terms of risk avoidance) as one that causes 10 deaths, assuming that all other risks are equal. The ratio of the numbers of deaths results in a relative risk value. If the relative risk is always based on the lowest measured risk in the numerator, a relative benefit results. The alternative with the lowest measured risk will always feature a relative benefit of 1. For the case above, the alternative with five deaths would have a relative risk benefit of 1 and the alternative with 10 deaths would have a relative benefit of 0.5.

4.7.3 Risk Weighting

The purpose of weighting in a comparative analysis of diverse factors, such as worker risks and schedule risks, is to prioritize and relate the importance of the factor measures. This allows for their direct comparison. In this analysis, the relative risk benefits are weighted (i.e., multiplied by a weighting factor) to quantitatively relate their importance. The use of weighting factors as multipliers is appropriate if all risk measures are linear in importance, as assumed in this analysis. The conversion of risk measures to relative risk benefits also results in a linear relationship between risk measures and relative risk benefits; thus the use of weighting factors as multipliers in this analysis is considered a defensible approach. Risk measures must be compared to establish weighting factors among the four risk categories. Comparison of all of the most beneficial risk measures is one approach. If all of the most beneficial risk measures were deemed to represent normal risks for the type of action being considered, then all of the weighting factors should be equal. However, if the most beneficial measured risks in a risk category were considered twice normal; (e.g., when technological limitations result in a projected cleanup period of 50 years, instead of a 25-year period considered reasonable) then a premium may be placed on getting the job done as soon as possible. In this case, a higher weighting factor would be applied to schedule risk.

4.7.4 Cost Benefit Analysis

Overall cost benefit can be computed by dividing the summed weighted relative risk benefits (a measure of overall benefit), by the summed costs for each alternative, as in the simplified equation below:

$$\textit{Cost-Benefit} = \frac{\sum \textit{(weighting factor) (relative risk benefit)}}{\sum \textit{all cost elements}}$$

5.0 BASES AND ASSUMPTIONS

5.1 RESOURCE DISTRIBUTION ASSESSMENT BASES AND ASSUMPTIONS

The calculations used in determining TWRS resource distribution include factors that are held constant, and several assumptions of activities where complete information was not available. The factors and assumptions used in the calculations are presented in Section 5.1.1.

5.1.1 Constant Factors

Constant factors are used in the TWRS labor distribution analysis. The contractor labor costs are given in Table 5-1. These are the costs to support one FTE worker for one year for each of the contractor categories shown.

Table 5-1. Contractor Labor Costs.

Contractor Category	Labor Cost ($/FTE-year)
Site Management/Operations	140,000
Site Infrastructure	140,000
National Laboratories	186,354
Site Contractors	140,000
Architecture/Engineering	180,000
Construction Contractors	85,000

The site management/operations to site infrastructure ratio is given in Table 5-2. This ratio is derived from information on the division of total site management. These values indicate that 85% of the total management costs go toward site management/operations, and the remaining 15% goes toward maintaining site infrastructure.

Table 5-2. Site Management/Operations to Site Infrastructure Ratio.

Management Area	Percent of Costs (%)
Site Management/Operations	85
Site Infrastructure	15

Tables 5-3 through 5-5 contain the percentage factors used to distribute the operations costs, the alternative base test costs, and the alternative Reddick (1994) costs among the four activities, respectively. Cost of materials is backed out at this point, leaving the remaining costs to apply toward personnel. The ratio between site management/operations and site infrastructure is dependent on the ratio given in Table 5-2.

Table 5-3. Operations Costs per Contractor per Activity.

Contractor Category	Studies/ Permitting %	Design %	Construction %	Operations %
Site Management/Operations	81	17	8	68
Site Infrastructure	14	3	2	12
National Laboratories	5	NA	NA	NA
Site Constructors	NA	5	5	NA
Architecture/Engineering Contractors	NA	75	5	NA
Construction Contractors	NA	NA	50	NA
Materials	NA	NA	30	20
Total	100	100	100	100

Table 5-4. Base Testing Costs per Contractor per Activity.

Contractor Category	Studies/ Permitting %	Design %	Construction %	Operations %
Site Management/Operations	64	8	4	47
Site Infrastructure	11	2	1	8
National Laboratories	25	10	5	25
Site Constructors	NA	5	5	NA
Architecture/Engineering Contractors	NA	75	5	NA
Construction Contractors	NA	NA	50	NA
Materials	NA	NA	30	20
TOTAL	100	100	100	100

Table 5-5. Reddick (1994) Testing Costs per Contractor per Activity.

Contractor Category	Studies/ Permitting %	Design %	Construction %	Operations %
Site Management/Operations	81	8	8	60
Site Infrastructure	14	2	2	10
National Laboratories	5	10		10
Site Constructors	NA	5	5	NA
Architecture/Engineering Contractors	NA	75	5	NA
Construction Contractors	NA	NA	50	NA
Materials	NA	NA	30	20
TOTAL	100	100	100	100

Tables 5-6 through 5-9 contain the percentage factors used to divide the FTEs for each contractor into worker categories. These factors are given for studies/permitting, design, construction, and operations, respectively.

Table 5-6. Worker Category Breakdown per Contractor for Studies/Permitting.

Contractor Category	Engineering/ Management %	Crafts %	Maintenance %	Operators %	Infrastructure %
Site Management/Operations	100	NA	NA	NA	NA
Site Infrastructure	NA	NA	NA	NA	100
National Laboratories	100	NA	NA	NA	NA
Site Constructors	NA	NA	NA	NA	NA
Architecture/Engineering Contractors	NA	NA	NA	NA	NA
Construction Contractors	NA	NA	NA	NA	NA

Table 5-7. Worker Category Breakdown per Contractor for Design.

Contractor Category	Engineering/ Management %	Crafts %	Maintenance %	Operators %	Infrastructure %
Site Management/Operations	100	NA	NA	NA	NA
Site Infrastructure	NA	NA	NA	NA	100
National Laboratories	100	NA	NA	NA	NA
Site Constructors	100	NA	NA	NA	NA
Architecture/Engineering Contractors	100	NA	NA	NA	NA
Construction Contractors	NA	NA	NA	NA	NA

Table 5-8. Worker Category Breakdown per Contractor for Construction.

Contractor Category	Engineering/ Management %	Crafts %	Maintenance %	Operators %	Infrastructure %
Site Management/Operations	100	NA	NA	NA	NA
Site Infrastructure	NA	NA	NA	NA	100
National Laboratories	100	NA	NA	NA	NA
Site Constructors	80	20	NA	NA	NA
Architecture/Engineering Contractors	100	NA	NA	NA	NA
Construction Contractors	20	80	NA	NA	NA

Table 5-9. Worker Category Breakdown per Contractor for Operations.

Contractor Category	Engineering/ Management %	Crafts %	Maintenance %	Operators %	Infrastructure %
Site Management/Operations	20	NA	30	50	NA
Site Infrastructure	NA	NA	NA	NA	100
National Laboratories	20	NA	30	50	NA
Site Constructors	NA	NA	NA	NA	NA
Architecture/Engineering Contractors	NA	NA	NA	NA	NA
Construction Contractors	NA	NA	NA	NA	NA

5.2 ACTIVITY SCHEDULE BASES AND ASSUMPTIONS

The design/construct/operate schedules for each of the four functional areas (retrieval, pretreatment, LLW vitrification, and HLW vitrification) are presented in Figures 5-1 through 5-4. Each schedule includes the TWRS program and the four testing alternatives. Detailed operation and testing schedules are provided in Appendix C.

ID	Name	Scheduled Start	Scheduled Finish
1	SST Retrieval F&R Development	10/3/94	9/30/96
2	W-340 CDR	7/5/95	3/29/96
3	W-340 Advanced Conceptual Design	4/1/96	12/31/96
4	W-340 Preliminary Design	1/1/97	11/26/97
5	W-340 Title I Design	11/27/97	11/26/98
6	W-340 Title II Design	11/27/98	6/4/99
7	W-340 Construction	6/7/99	8/7/01
8	W-340 Start Up	8/8/01	7/26/02
9	W-340 ORR	12/27/00	7/26/02
10	Hot Demonstration (C-106)	7/29/02	10/24/03
11	Design and Construct SST WR Systems	10/2/97	4/1/15
12	M-45-04-T02 Comp Design of Initial SST WR System	1/1/01	1/1/01
13	M-45-04-T03 Comp Construction of Initial SST WR System	7/2/03	7/2/03
14	Perform Initial SST WR	10/27/03	10/24/08
15	Perform WR of Remaining SST	10/27/08	10/24/18
16	Transfer SST to ER	9/24/12	9/25/23
17			
18	DST Retrieval F&R Development	2/1/95	9/30/97
19	W-211 Title I Design	3/10/95	8/31/95
20	W-211 Title II Design	12/6/95	11/30/96
21	W-211 Construction	5/1/97	6/30/99
22	W-211 ORR	11/4/98	6/30/99
23	W-211 Start Up	1/8/99	6/30/99
24	W-211 Hot Demonstration (SY-101&SY-103)	2/9/99	2/8/01
25	Design and Construct DST WR Systems	10/1/97	7/29/11
26	Retrieve Remaining DST	10/1/02	3/31/14
27	Transfer DST to ER	9/26/11	3/26/26
28			
29	Alternative 4	10/3/94	9/30/08
63	Alternative 3	10/3/94	10/3/94
64	Alternative 2	10/3/94	10/3/94
65	Alternative 1	10/3/94	10/3/94

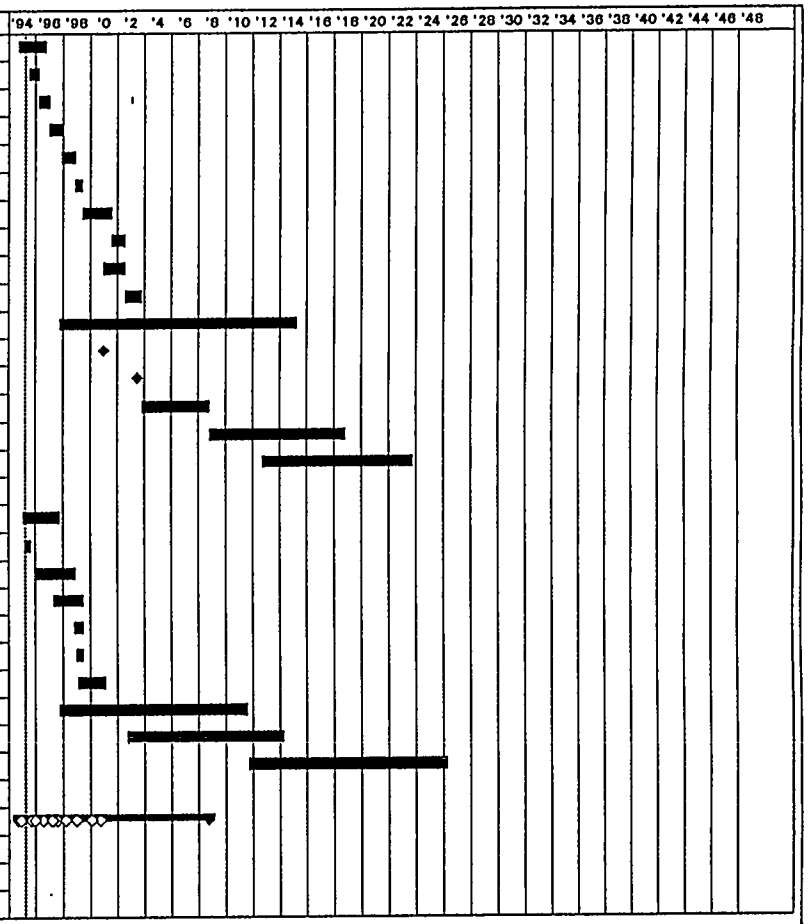

Project:
Date: 2/24/95

Critical — Noncritical — Progress — Milestone — Summary — Rolled Up

Figure 5-1. Retrieval Operations and Testing Schedule.

ID	Name	Scheduled Start	Scheduled Finish
1	Define F&R for In Tank Processing	10/3/94	9/30/04
2	Prepare In Tank Processing Startup	9/1/97	10/30/98
3	In Tank Startup	11/2/98	11/1/04
4	Operate In Tank Processing	11/2/04	6/30/20
5			
6	Define F&R for LLW Pretreatment	10/3/94	2/27/98
7	Prepare Conceptual Design	10/3/94	2/28/95
8	Prepare Advanced Conceptual Design	3/1/95	12/29/95
9	Prepare Title I Design	1/1/96	7/30/99
10	Prepare Title II Design	8/1/97	10/31/00
11	M-50-01 Start Const of LLW Pretreatment Facility	11/1/98	11/1/98
12	Construct LLW Pretreatment Facility - Mod 1	11/2/98	12/31/03
13	M-50-02-TO1 Compl Construction of LLW Pretreat Fac	12/31/03	12/31/03
14	Construct LLW Pretreatment Facility - Mod 2	11/1/00	11/30/05
15	Prepare LLW Facilities for Startup (Cold Test)	1/1/04	12/30/05
16	M-50-02 Start Hot Operations for LLW Pretreatment	1/3/05	1/3/05
17	LLW Mod 1 & Mod 2 Hot Demonstration (1st Yr Ops)	1/3/05	12/29/06
18	LLW Facilities Hot Operation	1/2/06	3/26/21
19			
20	Define F&R for HLW Pretreatment Facility	10/3/94	9/30/98
21	Conceptual Design	10/3/94	8/31/98
24	M-50-04-TO2 Start Definitive Design	11/1/98	11/1/98
25	Prepare Title I Design	11/2/98	1/31/00
26	Prepare Title II Design	10/2/00	5/31/01
27	M-50-04-TO3 Start Construction of HLW Pretreat Facility	6/1/01	6/1/01
28	Construct HLW Pretreatment Facility	6/1/01	5/31/07
29	Prepare HLW Facility for Startup (Cold Test)	6/1/07	5/30/08
30	M-50-04 Start HLW Pretreatment Facility	6/1/08	6/1/08
31	HLW Hot Demonstration (1st Yr Ops)	6/2/08	6/2/09
32	Operate HLW Pretreatment Facility	6/3/09	6/30/20
33	Shutdown Pretreatment Facilities	7/1/20	3/30/22
34			
35	Alternative 4	10/1/94	6/2/09
100	Alternative 3	10/3/94	10/1/01
107	Alternative 2	10/3/94	9/30/11
117	Alternative 1	10/3/94	9/29/04

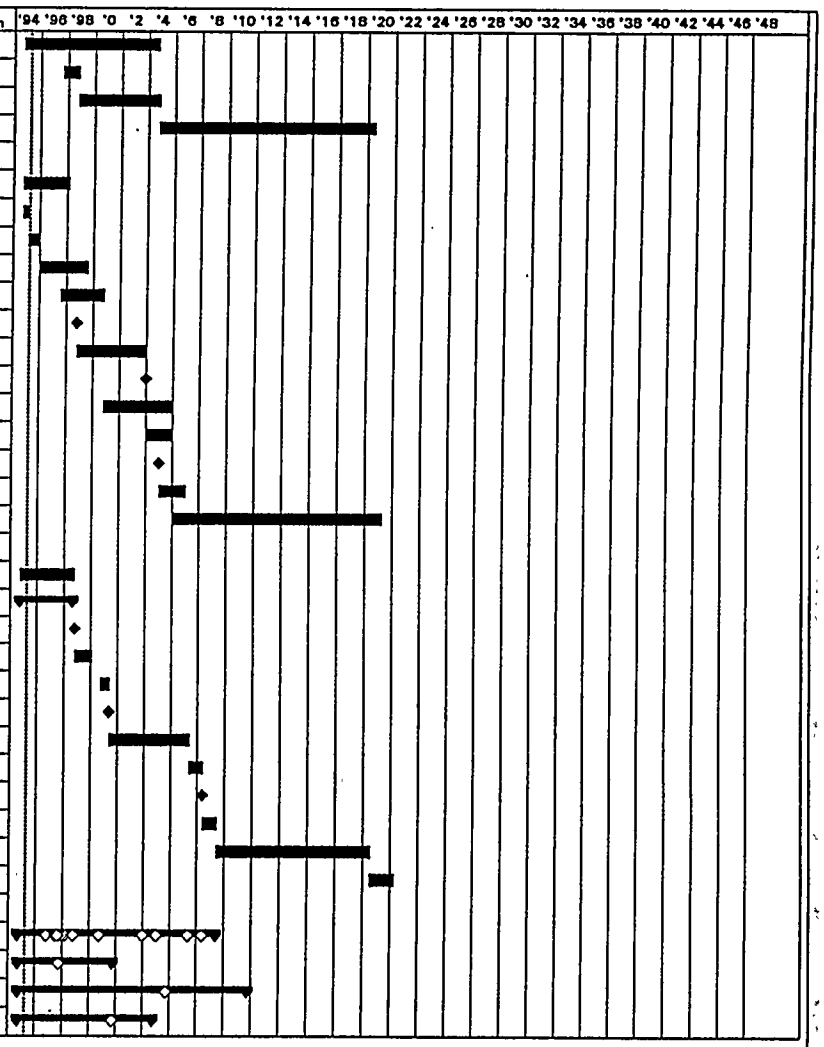

Project:
Date: 2/24/95

Critical — Noncritical — Progress — Milestone — Summary — Rolled Up

Figure 5-2. Pretreatment Operations and Testing Schedule.

ID	Name	Scheduled Start	Scheduled Finish
1	Preconceptual Design	10/3/94	11/30/94
2	Conceptual Design	12/1/94	11/29/96
3	M-60-03 Initiate Definitive Design	11/30/96	11/30/96
4	Title I/Title II Design	12/2/96	12/2/02
5	M-60-04 Initiate Construction of LLW Facility	12/31/97	12/31/97
6	LLW Facility Construction	12/1/97	12/31/03
7	M-60-05-T01 Complete Construction of LLW Facility	12/31/03	12/31/03
8	ORR	1/1/02	5/31/05
9	Cold Operations	3/1/01	5/31/05
10	Start Up LLW Facility	5/2/05	5/31/05
11	M-60-05 Initiate Hot Operations	6/30/05	6/30/05
12	Hot Demonstration (1st Yr Hot Ops)	6/1/05	6/1/06
13	Hot Operations	6/2/06	12/30/21
14	Clean Up Facility and Transfer to ER	12/31/21	12/31/25
15			
16	Alternative 4	10/3/94	9/30/17
50	Alternative 3	10/3/94	10/3/94
51	Alternative 2	10/3/94	10/3/94
52	Alternative 1	10/3/94	9/30/10

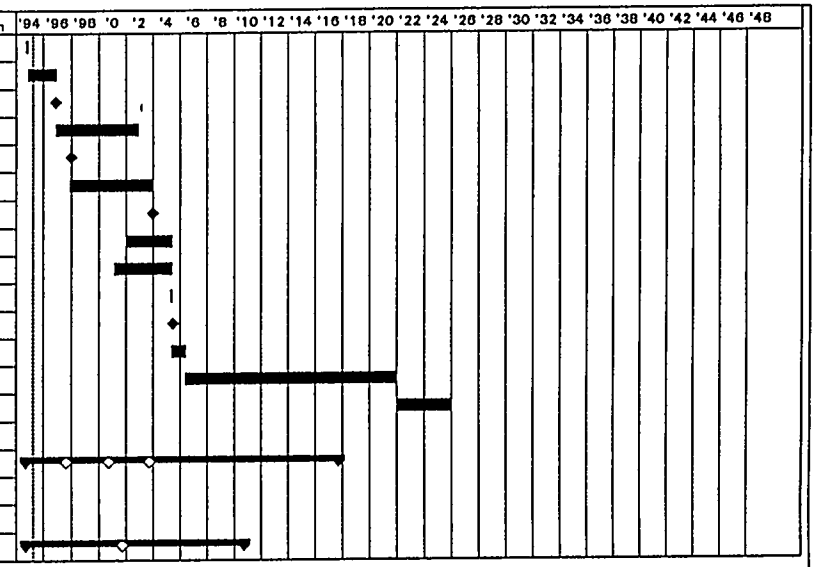

Project:
Date: 2/24/95

Critical
Noncritical
Progress
Milestone
Summary
Rolled Up

Figure 5-3. LLW Vitrification Operations and Testing Schedule.

ID	Name	Scheduled Start	Scheduled Finish
1	Define F&R for HLW Vitrification	10/3/94	3/24/97
2	Conceptual Design	4/7/97	9/24/98
3	M-51-03-T02 Initiate Definitive Design	12/31/98	12/31/98
4	Advance Conceptual Design	9/25/98	10/7/99
5	Title II Design	10/8/99	4/7/04
6	M-51-03-T03 Initiate Construction of HLW Facility	6/30/02	6/30/02
7	HLW Facility Construction	7/2/01	4/6/07
8	M-51-03-T04 Complete Construction of HLW Facility	12/31/07	12/31/07
9	ORR	7/6/04	1/6/09
10	Cold Operations	8/30/04	10/29/08
11	Start Up HLW Facility	1/7/09	11/10/09
12	M-51-03 Initiate Hot Operations	12/31/09	12/31/09
13	Hot Demonstration (1st Yr Hot Ops)	11/11/09	11/11/10
14	Hot Operations	11/12/10	11/13/28
15	Clean Up Facility and Transfer to ER	1/1/29	12/2/30
16	Operate Interim Storage Facility	11/11/09	11/10/39
17			
18	Alternative 4	10/3/94	11/11/10
38	Alternative 3	10/3/94	9/30/08
47	Alternative 2	10/3/94	9/30/11
57	Alternative 1	10/3/94	9/30/10

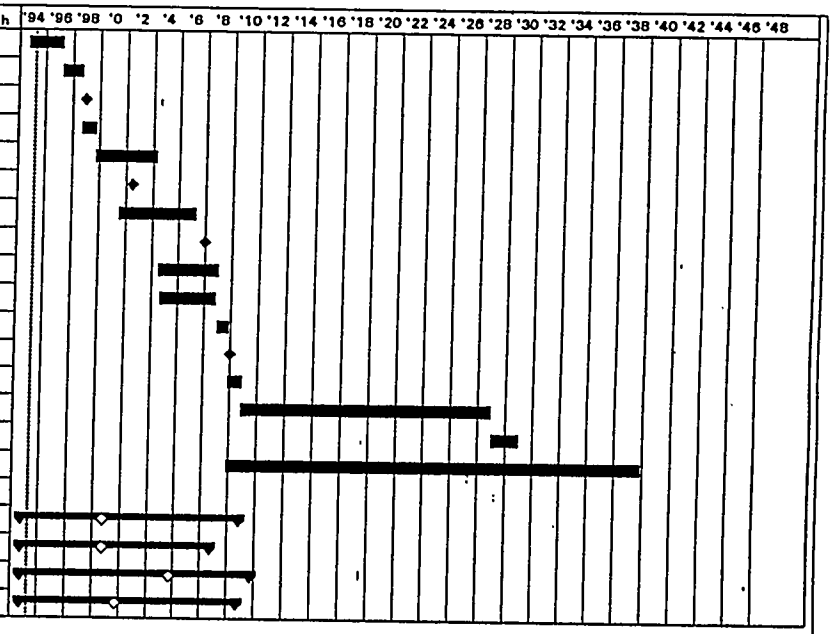

Project:
Date: 2/24/95

Critical — Noncritical — Progress — Milestone ◆ — Summary — Rolled Up ◇

Figure 5-4. HLW Vitrification Operations and Testing Schedule.

The following assumptions were used to prepare the schedules:

- If a test using actual waste was not identified in the multi-year program plan, the first year of operation using actual waste was assumed to be the test demonstration period and was included in the testing schedule and costs.
- Operations using simulants were assumed to be part of the testing program.
- The testing schedules only reflect those tests that are funded.
- For projects that required new funding (i.e., large-scale test facilities), the budgeting cycle was assumed to take three years to complete.
- Construction of the large-scale test facility was assumed to occur concurrently with the construction of other major proposed test facilities.
- Project W-340 Title I design phase was assumed to be one year in duration beginning immediately after completion of the preliminary design phase. Title II design was assumed to start after Title I and continue on through the beginning of construction.
- To fund the pretreatment pilot test using actual waste, it was assumed that $30 million was available to the test program for reprogramming.

5.3 SCHEDULE RISK BASES AND ASSUMPTIONS

The schedule risk evaluation relied primarily on engineering experience and judgement. The bases for these judgments are provided in this section. For presentation purposes, the discussion will focus on the individual elements used to calculate the schedule risk. Within each element, assumptions specific to individual TWRS function areas or unit operations are discussed.

An initial assumption in the evaluation was that a majority of the schedule risk is associated with a few major unit operations or groups of unit operations. Therefore, the evaluation only focused on a specific list of unit operations. The unit operations included: **Retrieval Function** - sluicing equipment; **Pretreatment Function** - sludge washing unit operations, in-tank settling unit operations, cesium ion-exchange feed evaporator, cesium ion-exchange columns, and effluent evaporator; **LLW Vitrification Function** - feed evaporator, melter system, cullet drying systems, off-gas quencher, cyclone, NO_x/SO_2 off-gas treatment system, and Claus reactor; **HLW Vitrification Function** - feed evaporator, melter system, offgas quencher, venturi scrubber system, and demister system.

5.3.1 Estimated TWRS Equipment Replacement Time

The estimated equipment replacement time is the consequence portion of the risk calculation. The replacement time includes design, procurement, removal of old equipment, and installation of new equipment. A base assumption in the estimation of replacement time was that, for high risk unit operations, alternative testing and some preliminary design would be completed prior to any need for equipment replacement. Therefore, replacement times for some complicated pieces of equipment may be shorter than for other less complicated equipment. The equipment specific assumptions are listed below.

- The retrieval function relies on the use of traditional sluicing equipment. The failure mode postulated for traditional sluicing was that it is not effective in meeting the closure goals for the tanks. Therefore, replacement included redesign, testing, and installation of an alternative sluicing technology. The replacement time assumed a mechanical retrieval system.

- Sludge washing replacement assumes that existing in-tank operations do not meet operational requirements and that alternative washing operations would be included in the pretreatment facility. The replacement time assumes that the pretreatment facility design will accommodate the sludge washing operations. Since sludge washing alternative testing is included in the Baseline Alternative, it was assumed that designs of alternative unit operations would be completed prior to a replacement need. Appendix E discusses the possible impact to the analysis in this report if alternative washing operations are not included in the pretreatment facility.

- Equipment replacement to rectify an in-tank settling failure was assumed to be similar to that required for sludge washing, i.e., centrifuge washing/separation in the pretreatment facility. Therefore, the replacement time for in-tank settling unit operations was assumed to be the same as that for sludge washing.

- Filtration equipment and melters were considered high risk types of equipment that would have alternative designs available in the event of failure. Therefore, the time required for replacement did not include a lengthy design period.

- Evaporators had one of the longest replacement periods because they were considered low risk operations that would not be specifically designed for quick change-out. The size and configuration of evaporators could also make them difficult to remove in radioactive environments.

- Cullet drying systems and the various components for offgas treatment were considered easier to redesign. Although these items were also considered lower risk pieces of equipment which would not be designed for removal, by virtue of their smaller size or shape, they would be easier to replace than an evaporator.

5.3.2 Baseline Replacement Probability

The baseline replacement probability is the probability that, after testing at the level proposed in the Baseline Alternative, a unit operation will have a design flaw requiring equipment replacement. The primary considerations were experience with the unit operations, the degree of testing planned in the baseline program, and the complexity of the unit operations. The following bases were used in determining baseline probability.

- The evaluation assumed that large-scale pilot testing using simulants would be performed in a time frame suitable to support design. This testing was considered key in nearly all assessments of replacement probability. The existing plans to build a new facility to perform this testing do not seem to support this assumption. However, it is believed that sufficient simulant test facilities exist at the Hanford Site or at equipment vendor facilities to perform this testing. This assumption is consistent with the assumptions of Reddick (1994).

- Unit operations with an estimated probability for replacement of less than 0.001 were assigned a probability of 0.

- In-tank processes such as sludge washing and in-tank settling have full-scale testing planned, which will sufficiently demonstrate the efficacy of the technology on actual wastes. Testing on actual waste at full-scale greatly increases the probability that testing will identify a critical flaw. Therefore, these operations were considered to have a low probability of failure during operations.

- Evaporators and ion-exchange equipment were considered to have a low probability of failure because of the extensive past use of this type of equipment and processes at the Hanford Site and throughout the industry. In addition, extensive testing is planned for ion exchange, which is expected to be readily scaleable to full-scale operations.

- Considerable melter testing is planned for bench-scale testing using actual waste, and large-scale testing using simulants. However, scaleup of a low-level melter to 200 tons per day from testing only at a bench-scale increases the risk. For this reason the melters were assigned one of the highest replacement probability values.

- Melter offgas systems are known to be critical components in melter system operations. However, the equipment is less complicated than the melter; therefore, the probability was reduced by an order of magnitude from the melter failure probability. Very low complexity offgas unit operations such as the demister system were reduced an additional order of magnitude.

- Filtration systems were considered to be prone to failure, especially with the potentially high degree of variability in feeds to the system. Therefore, this equipment was also assigned a relatively high probability of requiring replacement.

5.3.3 Replacement Probability with Further Testing

A probability that Alternative 1, 2, or 3 testing will develop information that will reduce schedule risk was assigned for four scenarios. The scenarios were: (1) support of design assuming the existing Tri-Party Agreement schedule, (2) support of operations under existing Tri-Party Agreement schedule, (3) support of design for a delayed schedule, and (4) support of operations for a delayed schedule (refer to Section 4.3 for additional detail). The bases for the probabilities selected are listed below.

- Testing in all three alternatives would not be completed in time to support the design process under the Tri-Party Agreement schedule. Therefore, the probability that the testing will identify a risk reducing design change for this scenario was 0.

- Testing during operations would have a lower probability to reduce the risk of equipment replacement than testing to support design. Testing during the operations period would increase efficiency through process optimization and training as well as allowing parallel testing of replacement alternatives. This type of support would have a smaller impact than identifying and correcting a major equipment deficiency during design.

- Testing to support operations under the Tri-Party Agreement schedule would have a greater reduction of risk than testing to support operations under the delayed schedule. Since testing was not performed to support design under the Tri-Party Agreement schedule, the process would have a greater risk for deficiencies that would be supported by operations testing.

- Testing to support optimum design should be completed one year before completion of Title II design to allow for full incorporation of the results.

- Optimum testing periods to support design were assumed. These periods were based on the complexity of the process being tested and the number of test runs required to assess the range of feeds. The optimum test period ranged from two years for ion exchange to five years for melters and associated equipment. The testing period was assumed to begin after completion of construction of the new test facilities. Facility construction times were based on the design and construction schedule provided in Reddick (1994). Alternative 3 pretreatment was assumed to have an accelerated schedule because the test appears to be funded under existing plans and would not be subject to the DOE budget cycle. The budget cycle for project funding for the

other facilities was assumed to require three years and would feed into the beginning of Title I design.

- Equipment and unit operations (e.g., sluicing) which do not have additional testing planned in a alternative are assigned a 0 probability.

- Ten percent of the added probability that further Alternative 1, 2, or 3 testing during startup and operations is attributed to continued Alternative 4 testing during operations.

5.3.4 Incremental Extension Schedule Risk

Schedule risk is defined as the risk that the baseline program schedule will not be met. It is the sum of the schedule extension and schedule delay risks.

Schedule extension is defined as the increase in schedule duration resulting from failure of technology to perform to design specifications. This increase is due to lost time while the failed equipment is being replaced. Testing impacts schedule extension in two ways. The first is that the Baseline Alternative Testing and additional Alternative 1, 2, or 3 testing, if planned, may identify a design flaw prior to one year before the end of Title II design, allowing the design to incorporate the testing results. Second, continued testing beyond the Title II design stage may yield results that will reduce schedule extension in the startup and operations stages. In general, the risk reducing impacts of testing are greatest when the testing results are available for Title II design.

Schedule extension risk was calculated as the duration of the schedule extension multiplied by the probability of the failure occurring. For the four scenarios evaluated, the calculations were performed as follows:

- Schedule extension risk for testing to support design:

  (schedule extension) x (replacement probability if only the Baseline Alternative testing is performed) x (1 - probability that Alternative 1, 2, or 3 testing will identify a risk reducing design change)

- Schedule extension risk for testing to support design and operations

  (schedule extensions) x (replacement probability if only the Baseline Alternative testing is performed) x [(1 - probability the Alternative 1, 2, or 3 testing will identify a risk reducing design change) + (added probability continued testing will reduce start-up/operations schedule risk)]

These two calculations were used to evaluate both testing based on the Tri-Party Agreement schedule and testing based on a delayed schedule.

Schedule delay is defined as the delay to startup necessary to allow testing to fully support design. To calculate schedule delay, a start date and optimum duration was determined for each testing alternative. From these values, the date that the testing results become available is easily found. The baseline program schedule is then shifted, if necessary, such that the conclusion of Title II design occurs one year after the testing results are available. For the purposes of this evaluation, it was assumed that the baseline plans would meet the Tri-Party Agreement requirements, therefore, the schedule delay associated with the Baseline Alternative is zero.

An example of schedule extension is provided in Figure 5-5, This example shows that the duration of schedule 1-A has extended one year longer than schedule 1. Both schedules start at the same time; therefore, there is no delay. An example of schedule delay is shown in Figure 5-6. The length of both schedules are the same (no schedule extension); however, the schedule 2-A start date is delayed one year. An example of schedule delay and extension is shown in Figure 5-7. Schedule 3-A is both one year longer in duration and starts one year later than schedule 3.

5.3.5 Loss of Productive Utilization

During replacement of a unit operation, one or more facilities would be shut down to allow for the replacement of equipment. Since the functions are interrelated, shutdown of one facility may impact another facility. The following assumptions were used in determining the annual loss of productive utilization of staff during equipment replacement.

- Loss of productive utilization was assumed to be 100% for most functions that include the unit operation requiring change. Staff in these functions were assumed to be subject to the same risks and costs as during operations because they would be involved in maintenance and equipment replacement activities.

- Failure of sluicing equipment was assumed to occur in the early stages of operation. The loss of productive utilization was not listed as 100% because supernate retrieval and processing may be possible while solids removal equipment is being replaced. Productive utilization for other facilities have only minor impacts since retrieval is likely to continue.

- Equipment replacement activities for pretreatment and LLW vitrification were assumed to happen in the early stages of operation when tank space is limited. Therefore, retrieval, pretreatment, and LLW vitrification processes will be impacted if one of the processes is shut down. The impact was assumed to be 90% to account for some limited capacity in the storage system. Staff in the impacted facilities would continue to have the same risks and cost because they would be involved in facility maintenance activities during the down time.

- It was assumed that HLW vitrification operations were not significantly tied to the operations of the other functions. Loss of production of the other

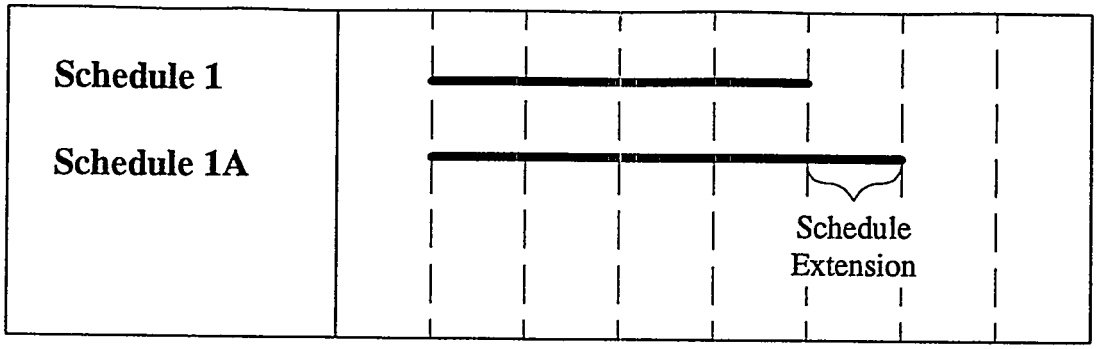

Figure 5-5. Schedule Extension Example.

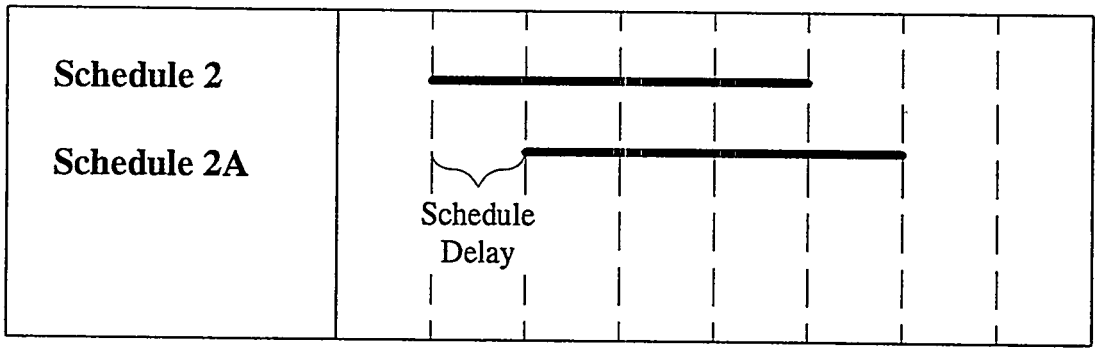

Figure 5-6. Schedule Delay Example.

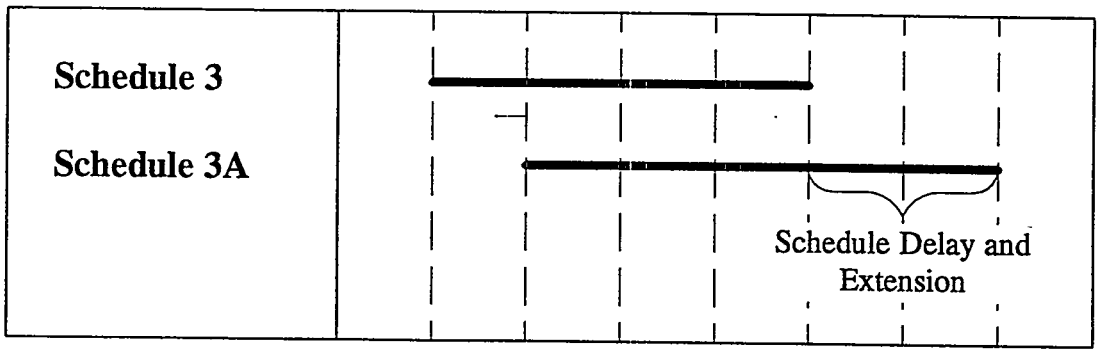

Figure 5-7. Schedule Delay and Extension Example.

functions was assumed to have no impact on the high-level operations because the process comes online several years after the other facilities. Shutdown of the high-level facility will have only a small impact on the other facilities. This impact may only occur if storage space for HLW feed becomes limited.

5.3.6 Costs Associated With Schedule Risk

Several costs are associated with schedule extensions and delays caused by the need to replace process equipment. These costs include: cost associated with the loss of productive utilization, cost of additional design and construction staff, cost of extending the tank waste safety and operational program, and capital cost of equipment. The bases for the incremental schedule risk costs calculations are listed below.

- The annual average operating costs for each of the four functions are listed below:

  Retrieval - $200,000,000
  Pretreatment - $130,000,000
  LLW vitrification - $230,000,000
  HLW vitrification - $250,000,000

  The annual operating costs were obtained from an average of the annual TWRS operations budget data discussed in Section 6.

  The cost associated with extension of the tank waste safety and operations program is assumed to be $400 million/year.

- The size of the design staff was based on 10% of the estimated capital equipment costs. The annual cost of design personnel was assumed to be $140,000/FTE. Where Title I/Title II design data existed in Boomer et al. (1993), the data was used instead of percentage basis. The staffing levels were annualized by dividing the estimated full time equivalents by the estimated replacement time.

- Chemical industry installation costs for purchased equipment range up to 50% of equipment purchase cost (Peters and Timmerhaus 1980). Replacement of equipment in a radiation zone will be considerably higher because of restricted access and burnout factors. However, operations staff will be available to support replacement activities. It was assumed that these two factors offset each other and that the resulting construction staff utilization would be 50% of the capital equipment costs. The annual cost of construction personnel was assumed to be $85,000. The staffing levels were annualized by dividing the estimated FTEs by the estimated replacement time.

- Construction staff utilization for sluicer and melter replacement was not based on cost data because the replacement equipment is highly specialized and costly. Construction staff requirements were based on staffing levels during initial construction of the facilities that were projected from the program budget data. Additional requirements for work in facilities that test actual waste was considered to be offset by the operations staff available to perform some of the work.

- Estimated equipment replacement cost was derived from information provided in Boomer et al. (1993).

- Incremental cost risks were developed using the following calculation: {(incremental schedule risk) x [(sum of loss of utilization costs) + (design and construction costs)]} + [(equipment cost) x (probability of replacement)]

  Incremental schedule risk and probability of replacement were scenario specific (e.g., support of design under the Tri-Party Agreement schedule).

5.3.7 Worker Risk Associated With Schedule Risk

Human health risks associated with delays due to schedule risk were also estimated as part of schedule risk. Industrial injury, industrial death, transportation injury, transportation death, and radiation exposure risks were estimated for each of the four scenarios (e.g., support of design under the Tri-Party Agreement schedule). Worker risk calculations include staff associated with a loss of productive utilization, design staff, construction staff, and tank waste safety and operation program staff. The assumptions used to develop worker risk are listed below.

- Annual operations staff risk factors for each category were based on average risks by TWRS function over the entire operations period. Human health risk assessment methodology is described in Section 4.5.

- Operations risk was calculated by multiplying the function wide operations staff risk factors by the annual percent loss of productive utilization for each function.

- Design and construction staff risk were based on the risk factors used in the human health risk assessment (Section 4.5) multiplied by the staffing levels.

- Worker risks associated with each scenario were calculated by multiplying the scenario specific incremental schedule risk by the sum of the annual operations, design, construction, safety, and operations staff work risks.

5.4 PROCESS MISHAP RISK ASSESSMENT BASES AND ASSUMPTIONS

Both process accident and major maintenance risk assessments are performed by estimating the potential frequency of occurrence and the likely consequences. The consequences are categorized to develop a consequence value. Combining these factors results in a unitless PPG value that can be used for comparisons. Section 4.4 further describes this methodology. This section provides the bases and assumptions for determining the frequency of occurrence and consequence values using this methodology. Also included are the general assumptions for comparing risks for the TWRS operations and risks from the various testing alternatives.

5.4.1 Accident Mishaps

Accident mishap risk factors (PPG values [unitless]) are developed by multiplying the unitless consequence values with the estimated frequencies of occurrence. Risk factors are first developed at the lowest defined process level (e.g., unit operation level) within each module or function, then evaluated for the module or function as a whole. For accident mishaps the unit operation with the highest maximum mishap risk is designated as the limiting event for the module. This recognizes that it is extremely unlikely that energetic mishaps which are themselves generally associated with a sequence of precursor events, will occur within multiple unit operations in a module. For general evaluation purposes, the accident PPG values are also summed to allow general comparisons at the module and function level. Figure 4-1 describes the general logic used for accident PPG value development. Table 4-1 presents the mishap risk factor worksheet formats.

5.4.1.1 Accident Consequence Values. Consequence values have been derived from selected elements of the relative ranking system implemented in the PPG (WHC 1993). These values are presented in Table 4-2 and more fully described in Section 4.4.4. To correlate these general values with mishap conditions, general indicator conditions have been developed that address the following: (1) waste inventory characteristics, (2) containment characteristics, and (3) the energetic reaction potential. The waste inventory characteristics rankings were based on: (1) waste radiation (high-level, low-level, or cold), (2) waste toxicity (high, low), and (3) the quantity and physical form of the waste for each unit within the modules. To better differentiate between potential magnitudes, general indicators were developed. These indicators are provided in Table 5-10.

The containment characteristics were ranked from the internal container level to the facility level. The energetic reaction potential is the probability of an energetic event (e.g., explosion, fire) to release relatively large quantities of contaminants. The characteristics that contribute to increased potential for energetic events include system pressure and temperature, the presence of volatile or flammable liquids or gases, and reactive or unstable material.

These indicator conditions are not applied as absolute predictors of potential consequence level, but are used as guides for qualified staff in performing a systematic and consistent review of each unit operation's baseline conditions.

Table 5-10. Consequence Ranks, Values, and General Indicators for Accidents and Nonroutine Maintenance.

Rank Attribute	8	7	5/6	4	3	2	1
Waste Inventory							
Type	LLW or Low Toxic Waste	LLW or High Toxic Waste	LLW, HLW, or High Toxic Wastes	LLW. HLW, or High Toxic Wastes	HLW or Extremely Toxic Wastes	HLW or Extremely Toxic Wastes	HLW or Extremely Toxic Wastes
Quantity	Small quantity LLW or Low Toxic Waste	Small quantity LLW or High Toxic Waste	Moderate quantity LLW or Toxic, or Small quantity HLW, or Large Quantity Non-Radioactive	Large quantity LLW, Moderate quantity HLW or High Toxic	Large quantity HLW or Extremely Toxic		
Physical form	Liquid or non-dispersible solid* *e.g., monolithic solid	Liquid or non-dispersible solid	Any form**LLW or Toxic, liquid or non-dispersible solid HLW **except solid	Any form LLW, HLW or Toxic	Any form HLW or Toxic	Any form HLW or Toxic	Any form HLW or Toxic
Containment Characteristics							
Container	High integrity container	Moderate integrity container	Moderate integrity container	Low integrity container	Low integrity container	No container	No container
Primary Containment	High integrity primary containment area	Moderate integrity containment area	Low integrity primary containment area	No primary containment area	No primary containment area	No primary containment area	No primary containment area
Facility Containment	High integrity structure	High integrity structure	Moderate integrity structure	Moderate integrity structure	Moderate integrity structure	Moderate integrity structure	Moderate integrity structure
Energetic Release Potential							
Temperature	Ambient	Ambient	T up to 100 °C	T up to 100 °C	T > 100 °C	T > 100 °C	T > 100 °C
Pressure	Ambient	Ambient	P up to 100 psi	P up to 100 psi	P > 100 psi	P > 100 psi	P > 100 psi
Reactive/ unstable	Nonreactive and stable	Low reactivity and stable	Low reactivity and instability	Moderately reactive	Moderately reactive	Highly reactive	Highly reactive
Flammable	Nonflammable	Flammable	Flammable	Flammable	Flammable	Highly flammable	High flammable

5.4.1.2 Accident Frequency of Occurrence Values. There are five frequency of occurrence values based on a modification of the PPG system (Section 4.4.5). As shown in Table 5-11, general indicator conditions have been developed for estimating the accident frequency of occurrence rates that address: (1) flammable materials, (2) energetic reaction potentials, and (3) system temperature and pressure. These indicator conditions are not applied as absolute predictors of the frequency of occurrence, but are used by qualified staff as guides in performing a systematic and consistent review of each unit operation's baseline conditions.

5.4.1.3 Base Case Compared to Test Alternatives. In general, it was estimated that many of the nonroutine maintenance mishaps for bench- and laboratory-scale tests were considered not applicable because the risks were considered to be well within the capabilities and planning of the laboratory or test facility. The nonroutine maintenance mishap events affected are electrical instrumentation, mechanical equipment, pluggage/leaking, and corrosion. The physical operations event was still included to provide some measure of input for nonroutine maintenance impacts. Other risks were typically similar but less than the corresponding base case relative risks.

5.4.2 Nonroutine Maintenance

Nonroutine maintenance PPG values (unitless) are developed as the product of unitless qualitative consequence values and estimated frequencies of occurrence. This is shown in Table 4-1, and described in Section 4.4.3.

Risk factors are first developed at the lowest defined process level (e.g., unit operation level), then combined for the module or function as a whole. The nonroutine maintenance mishap risks are summed across all unit operations as well as at the module and function level because they are simple independent hardware failures. Figure 4-2 describes the general logic used for nonroutine maintenance PPG value development.

5.4.2.1 Nonroutine Maintenance Consequence Values. Nonroutine maintenance consequence values are based on the PPG system in much the same manner as accident consequence values. However, nonroutine maintenance consequence values are associated with increased worker exposures during the performance of maintenance procedures initiated following the mishap. As such, maintenance operations would be controlled activities, and exposures limited to acceptable levels through monitoring, radiation work procedures, and worker training. Consequences for nonroutine maintenance mishaps are usually limited to Rank 7 (consequence value 5) for high-level and low-level unit operations, and Rank 8 (consequence value 1) for cold unit operations. These two rankings are summarized below:

Rank 7: (consequence value 5)
- Minor injuries requiring first aid
- Exposures below limits
- Removable skin contamination

Rank 8: (consequence value 1)
- No impact on worker health and safety.

Table 5-11. Frequency of Occurrence Values and General Indicators for Accidents.

Rank Parameter	Very Low	Moderately Low	Low	Medium	High
Probability-Frequency of Happening	Highly unlikely to occur	Unlikely to occur within facility lifetime	Possible to occur within facility lifetime	Likely to occur within facility lifetime	Anticipated to occur within two years
Frequency Values:	0.0001	0.001	0.01	0.1	1
General Indicators					
Accident Mishaps	• Nonflammable materials • Low energetic reaction potential -nonreactive materials -stable materials -compatible materials • Low pressure and temperature process	• Small to moderate quantities of flammables • Low energetic reaction potential -small quantity reactive materials -small quantity slightly unstable, slightly -small quantity incompatible materials • Moderate pressure and temperature process	• Small quantities of flammable materials • Low to moderate energetic reaction potential -small quantity reactive materials -small quantity slightly unstable materials -small quantity incompatible materials • High pressure and temperature process	• Large quantities of flammable materials • Moderate energetic reaction potential -moderate quantity reactive materials -moderate quantity slightly unstable materials -moderate quantity incompatible materials • High pressure and temperature process	• Same characteristics as Medium category • Complex process, difficult to control -multiple individual operations -high process flow rates

5.4.2.2 Nonroutine Maintenance Frequency of Occurrence Values. As described in Section 4.4.3, there are five orders of magnitude frequency of occurrence values. A frequency of occurrence value is selected for each of the five mishaps within a unit operation based on comparison of the unit operation's baseline conditions to general indicator conditions established for each frequency category. As shown in Table 5-12, general indicator conditions have been developed that address: (1) level and complexity of electrical instrumentation/control requirements, (2) level and complexity of mechanical equipment, (3) percent suspended solids, (4) level of corrosivity, and (5) number and complexity of physical operations. The low frequency of occurrence value (i.e., possible to occur within facility lifetime [frequency value 0.01]), is applied as the default value from which adjustments upward or downward are made, based on evaluation of the indicator conditions.

These indicator conditions are not applied as absolute predictors of frequency of occurrence category, but are used by qualified staff as guides in performing a systematic and consistent review of each unit operation's baseline conditions.

5.4.3 TWRS Operations and Testing Alternatives

In developing the TWRS operations and testing alternative PPG values, some general assumptions were made to ensure consistency. These general assumptions are as follows:

- Major testing (e.g., large-scale pilot testing and full-scale testing using actual waste) have the same or nearly the same PPG value as the equivalent TWRS operations module

- The PPG values for other tests are incrementally lower than the major testing based upon consequence and frequency potentials.

Major testing is considered to have the same consequence and frequency potentials as operating plants because the benefit of having a lower source term, as is often the case with major testing, is offset by the experimental nature of the test.

5.5 WORKER AND PUBLIC HEALTH RISK BASES AND ASSUMPTIONS

5.5.1 Worker Risk Bases and Assumptions

As described in Section 4.5, worker risks were evaluated in terms of: (1) injuries and fatalities associated with vehicular transportation to and from the work site, (2) injuries and fatalities associated with exposure to physical hazards within the work environment, and (3) cancer fatality risk associated with external exposure to ionizing radiation. Because the technology options are not fully characterized, a number of simplifying assumptions were made for the purpose of this initial evaluation of worker risks. This section describes the assumptions made for transportation, operational, and radiation exposure risks. The work

Table 5-12. Frequency of Occurrence Values and General Indicators for Nonroutine Maintenance.

Rank Parameter	Very Low	Moderately Low	Low	Medium	High
Probability-Frequency of Happening	Highly unlikely to occur	Unlikely to occur within facility lifetime	Possible to occur within facility lifetime	Likely to occur within facility lifetime	Anticipated to occur within two years
Frequency Values:	0.0001	0.001	0.01	0.1	1
General Indicators					
Nonroutine Maintenance Mishaps	• No mechanical equipment • Minimal control requirements • Low suspended solids • Neutral pH/corrosivity	• Low quantity of mechanical equipment of routine complexity • Low control requirements and instrumentation • Some suspended solids • Low pH/moderate corrosivity	• Moderate quantity of mechanical equipment for routine complexity • Moderate control requirements and instrumentation • Up to 10% suspended solids • Low pH/moderate corrosivity	• Moderate to extensive quantity of mechanical equipment for routine complexity • Moderate to extensive control requirements and instrumentation • 10 to 20% suspended solids • Low pH/moderate corrosivity	• Extensive quantity of mechanical equipment for routine complexity • Extensive control requirements and instrumentation • Greater than 20% suspended solids • Low pH/high corrosivity

force requirements used in the worker risk calculations are the results of the labor distribution calculations, as detailed in Section 4.1.

5.5.1.1 Transportation Assumptions. The major transportation assumptions address mileage and fatality and injury risk factors.

5.5.1.1.1 Mileage. Vehicular mileage associated with travel to and from the work site was estimated based on an average one-way distance of 30 miles. Based on 50 work weeks per year, and 5 work days per week, the annual mileage per work-year is calculated to be 15,000 miles. A second mileage allowance was made for the vehicular transport associated with infrastructure workers indirectly associated with the technology options. The annual mileage for infrastructure staff was estimated to be 4,000 miles per work-year based on 16 miles round trip per work day.

5.5.1.1.2 Weighted Risk Rates. For the purposes of this analysis, it was assumed that the average Hanford Site worker would travel through two population zones (suburban and rural) en route to the work site. It was further assumed that one-third of the route would be a suburban population zone, and the remaining two-thirds of the route would be a rural population zone. Based on the rates defined in Section 4.5.1, the resulting weighted rates for this route are 6.06×10^{-9} fatalities per mile and 1.24×10^{-8} injuries per mile as shown in the final column of Table 4-3.

5.5.1.2 Operational Risk Assumptions. For the purpose of this initial evaluation of alternatives, it was assumed that the incidence of injuries and fatalities during the implementation of the technology options is consistent with the historical averages for the Hanford Site, DOE, and general industry workers involved in comparable activities. The physical hazard risk factors, as identified in Table 4-4 and described in Section 4.5.3 include injuries per person-year and fatalities per person-year for management and engineering, construction/D&D crafts, maintenance crafts, and operators.

The incident rates address general risks only. The PPG value risks, as described in Section 4.5.1, address risks due to operating specific facilities as part of the TWRS operation or the testing alternatives.

5.5.1.3 Radiation Dose Assumptions. Due to insufficient or preliminary information, several assumptions were required to develop radiation dose estimates. Assumptions included categorizing radiation sources, defining the type of exposure received, and estimating the amount of exposure per worker category and source category.

5.5.1.3.1 Radioactivity Designation. Each unit test or process was designated as high-level, low-level, or cold. Units and tests containing material streams with a radionuclide activity of 0.13 Ci/kg or greater have been designated as high level and streams with an activity less than 0.13 Ci/kg have been designated as low level. Streams with no possibility of radionuclide contamination are designated as nonradioactive or cold. Since little is known about most of the testing phases, the following assumptions were made:

- If the TWRS program module or unit is identified primarily as high level, all tests involving actual waste in volumes of liters or more are also considered high level; all tests involving actual waste in volumes of milliliters or less are considered low level.

- If the TWRS program module or unit is identified primarily as low level, all tests using actual waste are also considered low level.

The major component that may be affected by this categorization scheme is the LLW melter. It is currently categorized as low level. If it is determined that doses are significant, this categorization and the resulting risks should be upgraded.

5.5.1.3.2 Internal Exposures. With regard to internal exposures to radioactive and hazardous materials (i.e., via ingestion, inhalation, or dermal absorption), it was assumed that engineering and procedural controls would be effective in preventing such exposures. This assumption is considered reasonable based on the general effectiveness of worker protection programs at the Hanford Site in preventing internal exposures during routine operations. Internal exposures to radioactive and hazardous materials can also occur as a result of equipment failures, operator errors, or other upset/accident conditions. These risks are included as part of the PPG value evaluation described in Section 4.4.

5.5.1.3.3 Effective External Exposures. For the purpose of this initial evaluation, it was assumed that standard design practices and radiation protection programs would be applied during the implementation of the technology options, and that external radiation doses would be managed in accordance with ALARA principles. It was also assumed that the exposure per individual would be based on the radionuclide designation for the unit or test and the category of worker.

The average doses received are estimated to be less than the lowest Hanford Site administrative control level for total effective dose equivalent, which is 500 mrem (DOE 1994). The requirements for exceeding this level include approval from the individual Level 3 line manager and the radiological controls manager. To be conservative, it is assumed that most operators and maintenance workers that work in high-level units and tests will receive near this level of exposure. For calculation purposes, the exposure for operators and maintenance workers was estimated to be 400 mrem/person-year actively working in a high-level unit. Since the radiation doses are lower in the low-level units and tests, the dose per person-year for operators and maintenance workers actively working in low-level units is estimated to be 150 mrem/person-year. For conservative purposes, it was estimated that workers involved with units would have some dose due to other activities. This small dose was estimated to be 50 mrem/person-year for operators and maintenance workers.

The dose per person-year per unit or test for the other categories of workers will be less. For construction/D&D workers, it is estimated that the dose will be one-half that for operators and maintenance workers. For management and engineering workers, the

estimated dose is one-third of that for operators and maintenance workers. As addressed above, infrastructure personnel are assumed to receive no dose.

The estimated dose is affected not only by the category of worker but also by a factor that indicates the percentage of person-hours for each category actively working in each designated type of unit or test. These factors are often unit or test specific and are provided in the appropriate results sections or appendices on radiation exposure.

The estimated doses identified above are consistent with other estimates. Boomer et al. (1993) estimated external radiation doses of 400 mrem/yr to operators and maintenance workers in highly radioactive facilities and 40 mrem/yr to management and engineering staffs in the same facilities.

5.5.2 Public Health Risk Bases and Assumptions

The key bases and assumptions used for the comparative public health risk analyses in Section 6.4.2 are summarized in this section. These bases and assumptions were used by WHC (1995) to evaluate risk mitigation associated with the use of subsurface barriers to support retrieval of SST waste. The WHC (1995) study is the source of the risk analysis for the TWRS baseline schedule used in this study. Those assumptions are listed below.

(1) The relative risk analyses are based on a hypothetical tank farm containing twelve, 3.8 x 10^6-L (1-Mgal) SSTs.

(2) The eight constituents of primary concern in this study (^{14}C, ^{99}Tc, ^{129}I, ^{238}U, NO_3, NO_2, TBP and EDTA) all feature K_d=0 and solubilities based on SST drainable liquid data.

(3) Each hypothetical tank contains masses of COCs equal to the average of their masses in all 149 SSTs.

(4) Five of the 12 tanks in the hypothetical tank farm have leaked waste in the past. Liquid waste fill a small void space (averaging 1 mm [0.04 in.] thick) that exists between the tank bottom and its concrete base in these cases and the same waste has also advected into the concrete foundation of the tank.

(5) Waste that has advected into the concrete has done so over the 23-m (75-ft) diametric area of the tank base at an average head of 0.46 m (1.5 ft) for 15 years.

(6) The hydraulic conductivity and porosity of the concrete are 3.75 x 10^{-10} cm/s (7.38 x 10^{-10} ft/min) and 0.22, respectively.

(7) The effective diffusivity of the concrete is 5 x 10^{-8} cm^2/s (8 x 10^{-9} in^2/s); the moisture fraction is 0.15.

(8) Advection dominates diffusion as the mechanism that drives contaminants into the concrete.

(9) Five of the 12 tanks have leaked an average of 41,600 L (11,000 gal) each to the soil. Leaked waste contains contaminants at one-half their concentrations in drainable liquid.

(10) Traditional sluicing is used to remove 99% of the tank waste contained within the steel shell.

(11) The time required to achieve cleanout of a tank by traditional sluicing is 123 days.

(12) A total of five of the 12 tanks will release new leaks to the soil during new sluicing operation. These five tanks include three previously leaking tanks and two newly leaking tanks. Two previously leaking tanks are assumed to be leak-tight during new sluicing operations due to the presence of leak holes above liquid levels required for sluicing or due to blockage of holes by fine-grained waste particulates.

(13) It is assumed that the five leaking tanks release 152,000 L (40,000 gal) each during new sluicing operations based on the current TWRS baseline schedule. Each delay of six years in the TWRS tank waste retrieval system results in one additional 152,000-L (40,000-gal) leak during sluicing. The leak occurs at a depth of 15 m (50 ft) belowgrade.

(14) The average hydraulic head during traditional sluicing at the leak location is 4.6 m (15 ft). This head will cause further advection of tank waste into the tanks concrete. The average height of liquid in the tanks during sluicing is 3.1 m (10 ft) and the specific gravity of the liquid is assumed to be 1.5.

(15) After sluicing, the tank void space is filled with grout and a Hanford Permanent Isolation Barrier is constructed over the tank farm.

(16) Recharge of meteorologic water through the Hanford Permanent Isolation Barrier is 0.05 cm/yr (0.02 in/yr). A vadose zone water travel time of 19,000 years is estimated for this recharge rate.

(17) It is assumed that recharge water is not deflected by the tank dome to the sides of the tank because deterioration and cracking of the tank dome will allow the water to flow through the cracks and enter the space enclosed by the tank.

(18) Recharge water dissolves residual tank waste, displaces waste between the tank and concrete base and waste in the soil leaches waste in the concrete. The concentration of constituents of concern in concrete leachate is one-half the concentration of the waste in the void space between the tank and concrete.

(19) The entire vadose zone plume entering the groundwater is assumed to be captured by an operating well used to meet the domestic and irrigation needs of a 2-ha (5-acre) farm. These needs require an average water pumping rate of 45 m^3/day (1,589 ft^3/day).

5.6 COST-BENEFIT ANALYSIS BASES AND ASSUMPTIONS

The key bases and assumptions for the cost-benefit analysis in Section 7 are provided below.

- Schedule risk, normal worker risk, process mishap risks, public health risk, and cost represent the primary stakeholder values for computing cost-benefit.
- Industrial deaths and injuries are closely related; therefore, normal worker risk is represented by fatalities caused by industrial accidents, radiation exposure, and vehicular accidents.
- Carcinogenic risk is more limiting than HI; therefore, public health risk is represented by carcinogenic risk.
- Schedule risk adversely impacts normal worker risk, public health risk, and cost, resulting in incremental increases in each.
- The importance of risk differences in a given category of risk (e.g., worker risk) is best expressed as the ratio of a risk measure to the lowest risk measure across alternatives. This assumption presupposes the linearity of risk versus importance.
- Diverse risks can be related using weighting factors.

This page intentionally left blank.

6.0 SUMMARY OF COSTS AND RISKS

6.1 COSTS

The TWRS program total operating cost is shown in Figure 6-1. The valleys in FY 2005 and 2010 represent startup and hot demonstration costs for the LLW vitrification and the HLW vitrification facilities, respectively. The spike in FY 2022 is the clean up and transfer of the LLW vitrification facility to the environmental restoration program. The test alternative total costs are plotted in Figure 6-2. The two spikes in FY 2005 and FY 2010 are the result of the demonstration testing with actual waste for the vitrification facilities. Total costs for the four functional areas for each testing alternative are in Table 6-1 and the differences between the Alternative 1, 2, and 3 costs and the corresponding Baseline Alternative are given in Table 6-2.

Table 6-1. TWRS Project Costs (millions).

	Retrieval	Pretreatment	LLW Vitrification	HLW Vitrification	Total
Operations	$4,477.8	$2,924.0	$6,064.3	$7,436.8	$20,902.9
Baseline Alternative	202.5	427.1	481.7	523.7	1,635.0
Alternative 1	202.5	605.5	698.7	740.6	2,247.3
Alternative 2	-202.5	749.2	481.7	-972.5	2,405.9
Alternative 3	202.5	489.6	481.7	758.6	1,932.4

Table 6-2. Test Alternative Cost Differences (millions).

	Retrieval	Pretreatment	LLW Vitrification	HLW Vitrification	Total
Alternative 1	$0	$178.4	$217.0	$217.0	$612.4
Alternative 2	0	322.1	0	448.7	770.8
Alternative 3	0	62.5	0	234.9	279.4

The total estimated cost for the TWRS program is $20,902.9 million. The Baseline Alternative costs an additional $1,635.0 million, which increases project costs 8%. Alternatives 1, 2, and 3 would increase project cost 11%, 11%, and 9% respectively. Detailed cost figures for the functional areas and the test alternatives are provided in Appendix B-1.

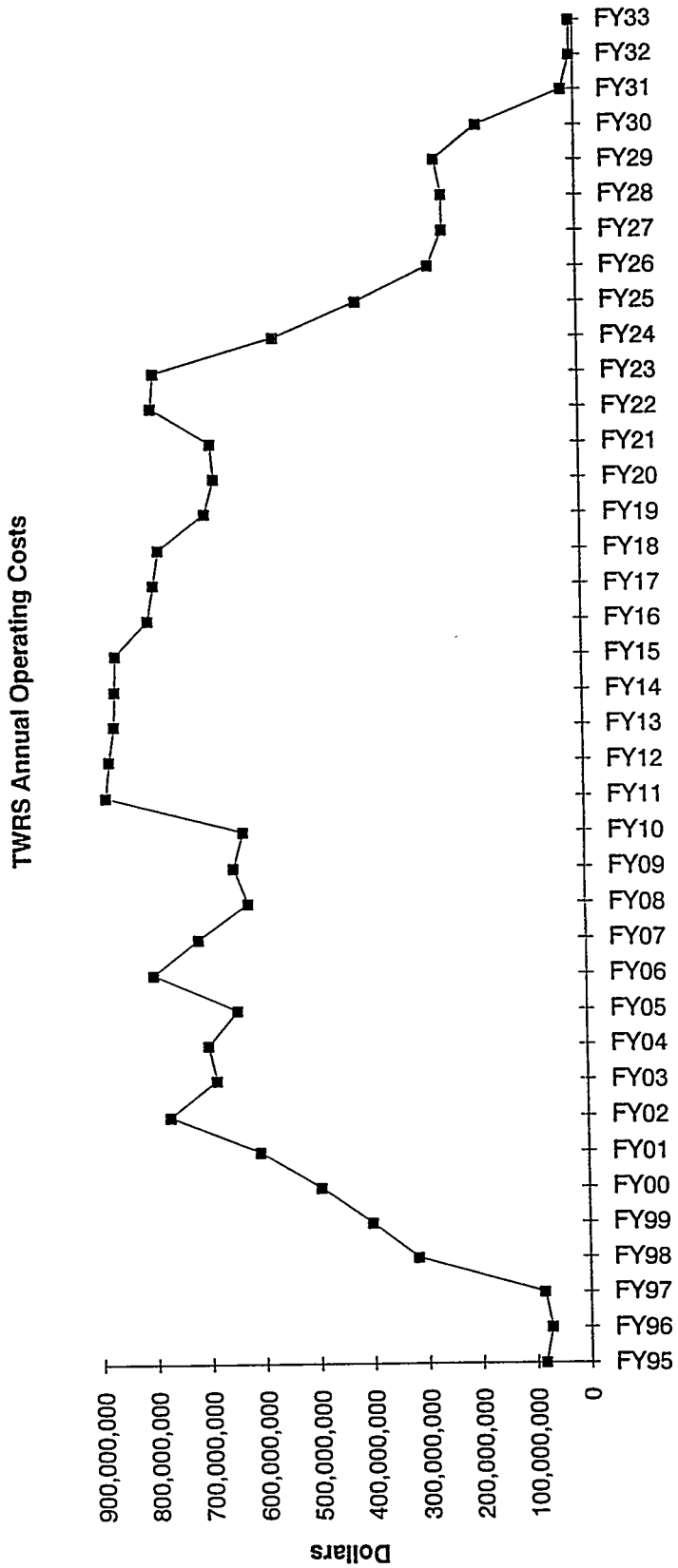

Figure 6-1. TWRS Total Operating Costs.

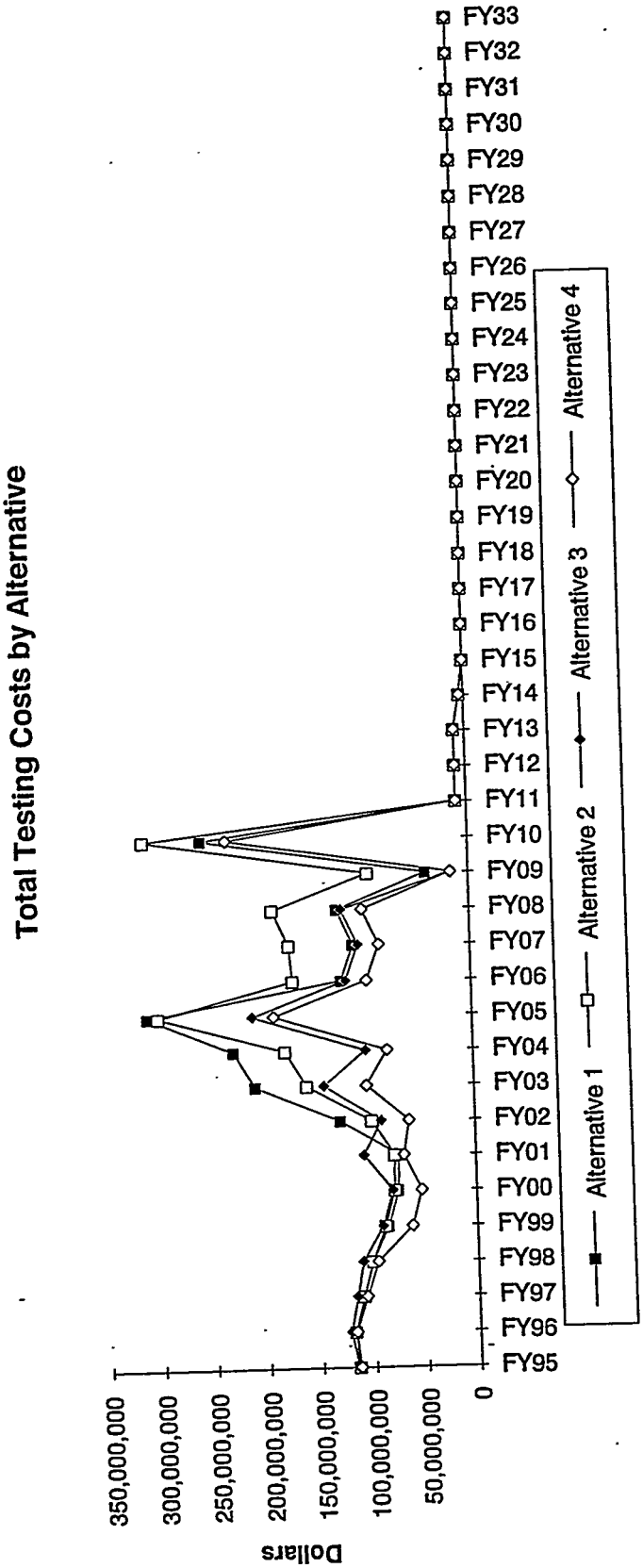

Figure 6-2. Test Alternative Total Costs.

6.1.1 Retrieval Test Costs

Retrieval annual test costs are shown in Figure 6-3. The level of testing that is planned for the retrieval project is the same for the four alternatives; therefore, the costs are shown in one plot instead of four. The testing proposed is a 5% increase to the project retrieval costs.

6.1.2 Pretreatment Test Costs

Pretreatment annual test costs are shown in Figure 6-4. The Baseline Alternative is estimated to cost $427.1 million and represents a 15% increase to the project pretreatment costs. Alternative 3 would increase testing costs $62.5 million which would increase total project pretreatment costs 17%. Alternative 1 would increase pretreatment project costs 21%. Alternative 2 is the most costly strategy, estimated to cost $749.2 million and increase the total pretreatment project costs by 26%.

6.1.3 LLW Vitrification Test Costs

The LLW vitrification annual test costs are shown in Figure 6-5. The LLW vitrification function benefits from Alternatives 1 and 4. Alternative 4 increases project LLW vitrification costs $481.7 million, which is an 8% increase to project costs. Alternative 1 increases test costs $217.0 million and increases overall project LLW vitrification costs by 12%.

6.1.4 HLW Vitrification Test Cost

The HLW vitrification annual test costs are shown in Figure 6-6. The Baseline Alternative is estimated to cost $523.7 million and represents a 7% increase to HLW vitrification project costs. Alternative 3 costs $758.6 million, a 10% project HLW vitrification cost increase. Alternative 1 increases project cost by 10% as well. Alternative 2 increase total project HLW vitrification costs by 13% or $972.5 million.

6.2 SCHEDULE RISKS

The methodology and assumptions for determining schedule risk are discussed in Sections 4.3 and 5.3, respectively. Spreadsheet tables with the values used in the calculations are provided in Appendix C. Risks are presented for the four testing scenarios discussed in Section 5.3: (1) testing to support design under the existing Tri-Party Agreement schedule; (2) testing to support design, startup, and operations under the existing Tri-Party Agreement schedule; (3) testing to support design assuming a delayed schedule; and (4) testing to support design, startup, and operations assuming a delayed schedule. A summary of the results are provided for each alternative as well as a brief comparison of the testing

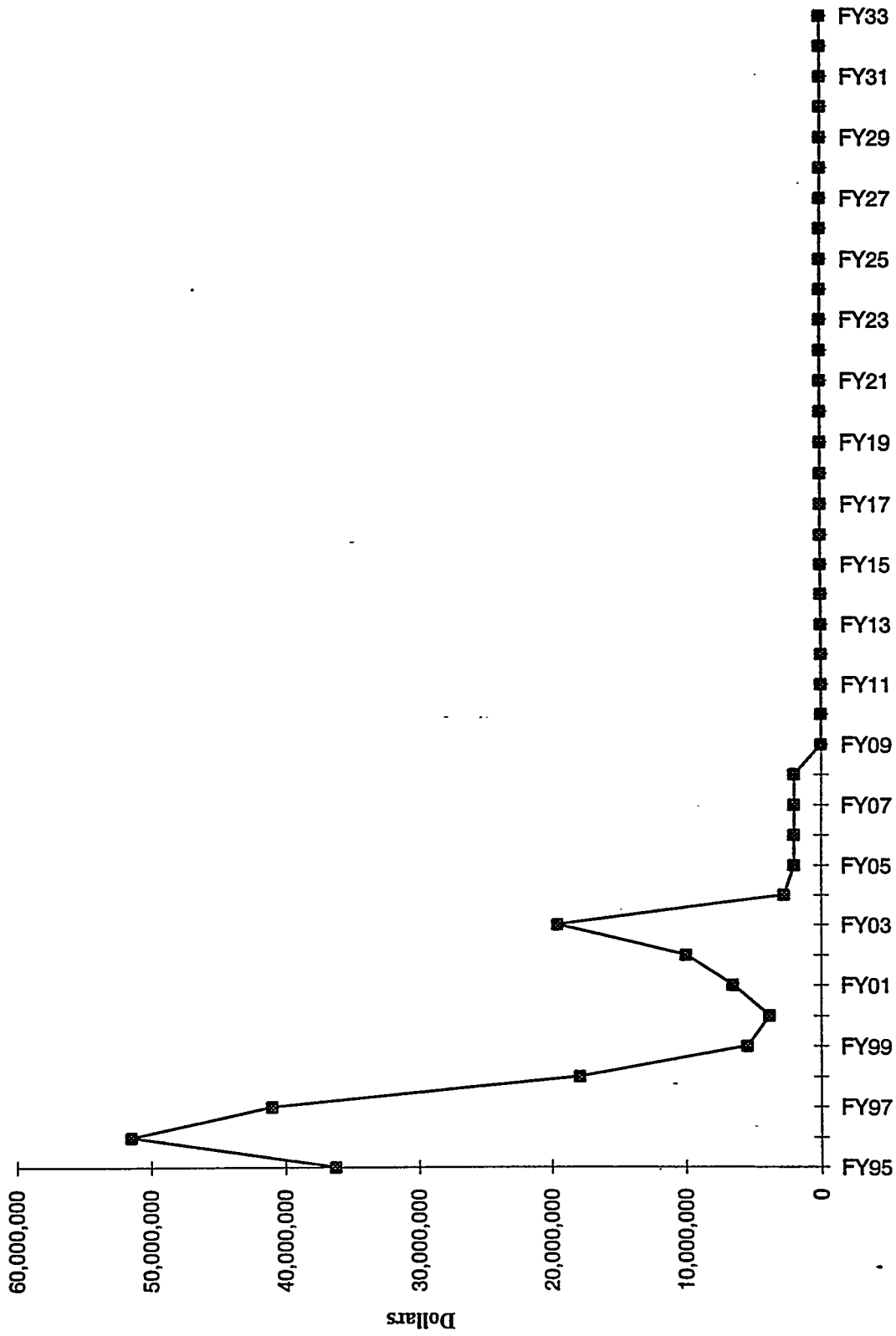

Figure 6-3. Retrieval Annual Test Costs.

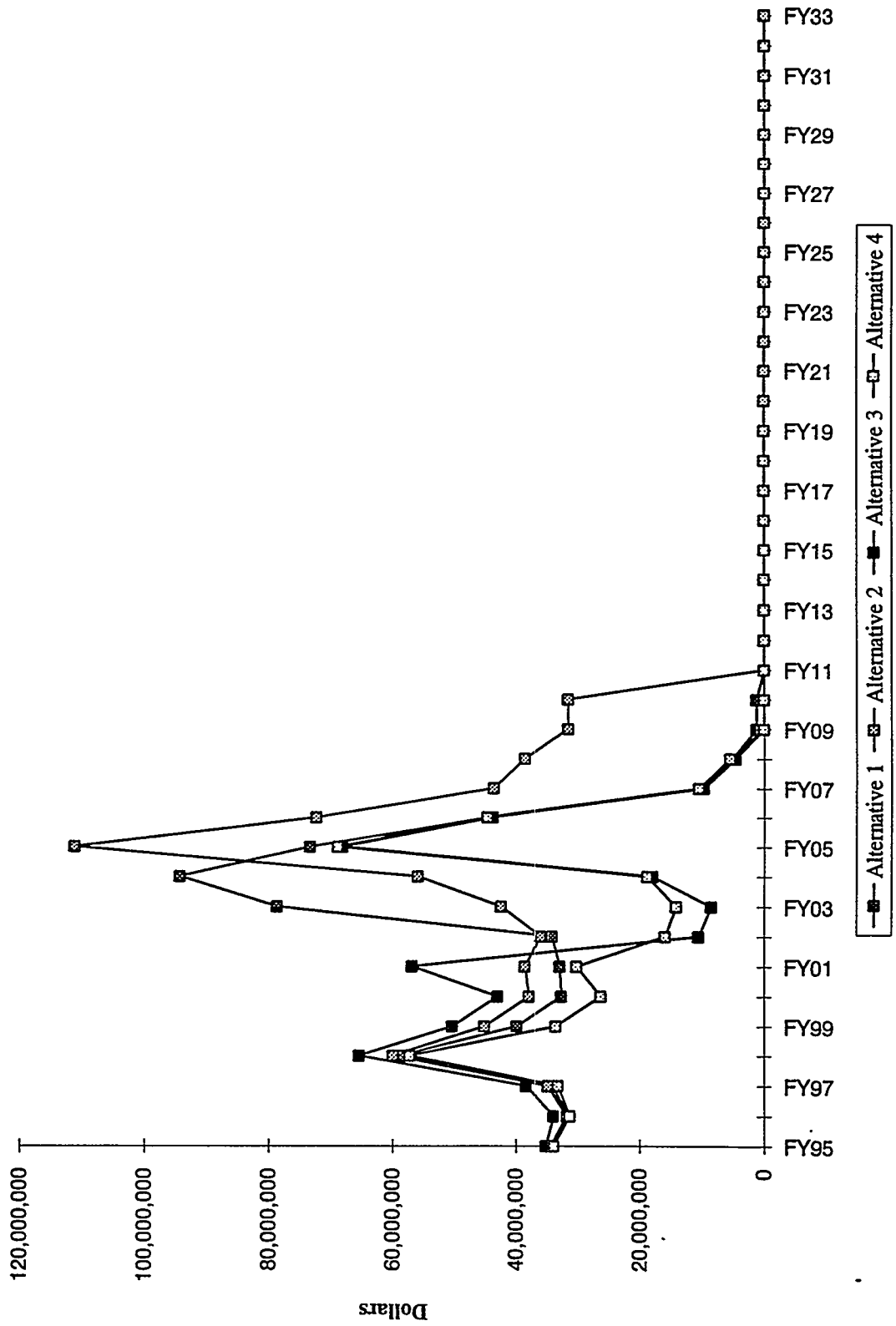

Figure 6-4. Pretreatment Annual Test Costs.

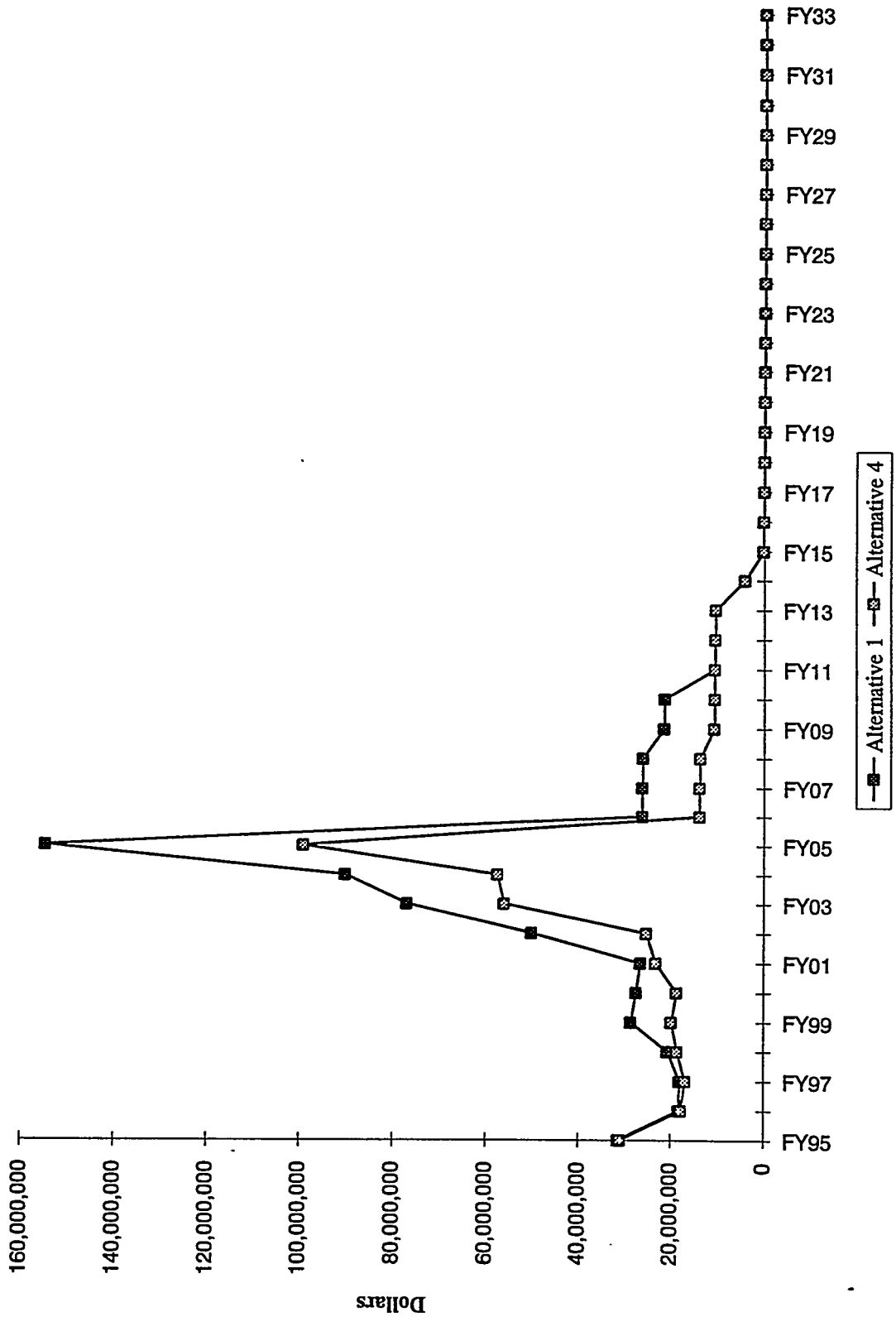

Figure 6-5. LLW Vitrification Annual Test Costs.

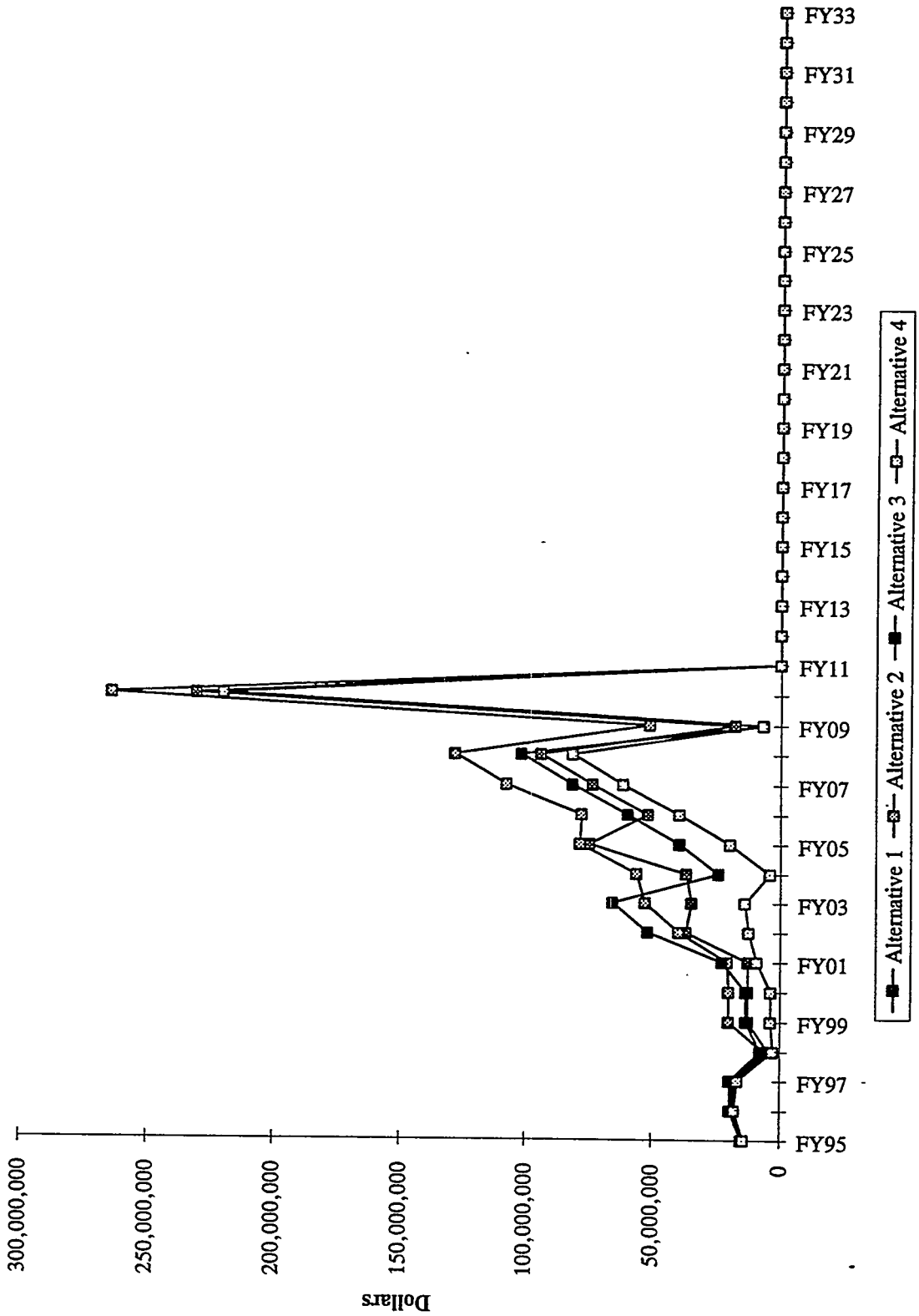

Figure 6-6. HLW Vitrification Annual Test Costs.

alternatives. A cost benefit comparison of the four alternatives is provided in Section 7. The following observations are common to all alternatives:

- The impacts of schedule delays to allow input of testing data into the design far outweigh the impacts of schedule extension due to technology risk. Schedule delays range from five to eight years and the schedule extension risk ranges from 1 to 1.4 years. Because of the time and expense associated with the delays, a large loss occurs when the schedule is delayed to optimize design input.

- There are five main areas identified as having the greatest technology failure risk. These are, in order of greatest risk: (1) sluicing retrieval, (2) LLW vitrification melter, (3) HLW vitrification melter, (4) the filtration component of pretreatment solids/liquids separation, and (5) the LLW vitrification offgas treatment system. The assumed probability of success for these processes are 80%, 90%, 90%, 90%, and 99% respectively. The primary risk variable affecting all of these processes is the variability of the feed material.

- The function that accounts for a majority of the schedule extension risk is retrieval, accounting for 60% to 75% of the total schedule extension risk. Also, four testing alternatives have the same level of retrieval equipment testing planned, with no additional testing in Alternatives 1, 2, and 3 beyond the tests planned in the Baseline Alternative. Pretreatment accounts for the least schedule extension risk at 5% to 10%. The remaining schedule extension risk is evenly split between the vitrification functions for most alternatives.

- Relative benefit (decrease in schedule extension risk) of the additional testing proposed in Alternatives 1, 2, and 3 ranges from 3.5 to 16.5 weeks. The added benefit of continued testing during operations ranges from 2 to 5 weeks.

- A majority of the cost impact is associated with the extension of the tank waste safety and operations program. For example, in Alternative 1 the extension of the tank waste safety and operations program accounts for 43% of the overall cost impact. The capital equipment, operations staff, and design/construct staff account for 30%, 20%, and 7%, respectively.

- Nearly all of the worker injury risk is associated with industrial injury risk and almost none is attributed to transportation injury risk. Worker death risk is divided between industrial death risk, transportation death risk, and radiation exposure risk at approximate percentages of 45%, 35%, and 20%, respectively.

A summary of results for the schedule risk evaluation is provided in Table 6-3. Table 6-3 also lists the relative benefit of doing additional testing with respect to the Baseline Alternative. An explanation of the columns found in Table 6-3 is provided in Table 6-4.

Table 6-3. Schedule Risk Summary.

Schedule Risk Summary	Schedule Risk for Testing to Support Design-TPA Schedule	Schedule Risk for Testing to Support Design & Operations-TPA Schedule	Schedule Risk for Testing to Support Design-Delayed Schedule	Schedule Risk for Testing to Support Design & Operations-Delayed Schedule	Cost Risk for Design Support Testing-TPA Schedule	Cost Risk for Design & Operations Support Testing-TPA Schedule	Cost Risk for Design Support Testing-Delayed Schedule	Cost Risk for Design & Operations Support Testing-Delayed Schedule	Risk Attributed to Schedule Risk For Support of Design-TPA Schedule	Risk Attributed to Schedule Risk for Support of Design & Operations-TPA Sch.	Risk Attributed to Schedule Risk for Support of Design-Delayed Schedule	Risk Attributed to Sch. Risk for Support of Design & Operations-Delayed Sch.	Risk Attributed to Schedule Risk For Support of Design-TPA Schedule	Risk Attributed to Schedule Risk for Support of Design & Operations-TPA Sch.	Risk Attributed to Schedule Risk for Support of Design-Delayed Schedule	Risk Attributed to Sch. Risk for Support of Design & Operations-Delayed Sch.
	Risk (Yrs)				Cost Impact ($)				Worker Injury Impact				Worker Death Impact			
Alternative 1	1.39	1.20	8.51	8.38	1.3E+09	1.2E+09	4.0E+09	3.8E+09	301	256	924	895	1.47	1.25	4.36	4.22
Alternative 2	1.39	1.22	9.62	9.48	1.3E+09	1.2E+09	4.5E+09	4.4E+09	301	264	1056	1026	1.47	1.29	4.98	4.84
Alternative 3	1.39	1.22	6.63	6.50	1.3E+09	1.2E+09	3.3E+09	3.2E+09	301	264	774	745	1.46	1.28	3.62	3.48
Baseline Alternative	1.39	1.31	1.39	1.31	1.3E+09	1.3E+09	1.3E+09	1.3E+09	301	288	301	288	1.46	1.40	1.46	1.40
Benefit Relative to Baseline Alternative																
Alternative 1	0.00	0.11	-7.13	-7.07	0.0E+00	1.4E+08	-2.6E+09	-2.5E+09	0	32	-623	-607	-0.01	0.15	-2.90	-2.82
Alternative 2	0.00	0.09	-8.23	-8.18	0.0E+00	9.7E+07	-3.2E+09	-3.1E+09	0	25	-755	-738	-0.01	0.11	-3.52	-3.44
Alternative 3	0.00	0.09	-5.25	-5.19	0.0E+00	9.7E+07	-2.0E+09	-1.9E+09	0	25	-473	-456	0.00	0.12	-2.16	-2.08

Table 6-4. Definition of Table 6-3 Elements. (Page 1 of 3)

Column	Title	Definition
1	Incremental schedule risk of testing to support design - TPA schedule	Schedule extension risk = (Estimated TWRS equipment replacement time) x (Equipment replacement probability if no testing is performed other than that included in Alternative 4) x (1 - (Probability that Alternative 1, 2, or 3 testing will identify a risk reducing design change, assuming facility operations are initiated according to the TPA schedule)). Refer to Appendix D values used in the calculation.
2	Incremental schedule risk for testing to support design and operations - TPA schedule	Schedule extension risk = (Estimated TWRS equipment replacement time) x (Equipment replacement probability if no testing is performed other than that included in Alternative 4) x (1 - ((Probability that Alternative 1, 2, or 3 testing will identify a risk reducing design change, assuming facility operations are initiated according to the TPA schedule) + (Added probability Alternative 1, 2, or 3 testing will reduce risk during startup and operations if testing is continues throughout the operations period)). Refer to Appendix D values used in the calculation.
3	Incremental schedule risk of testing to support design - delayed schedule	Includes both schedule delay and schedule extension risk. Schedule extension risk = (Estimated TWRS equipment replacement time) x (Equipment replacement probability if no testing is performed other than that included in Alternative 4) x (1 - (Probability that Alternative 1, 2, or 3 testing will identify a risk reducing design change, assuming facility startup is delayed to provide optimum input to the design)). Schedule delay = the amount of time in facility startup is delayed to provide optimum input of testing data into the design. Refer to Appendix D values used in the calculation.
4	Incremental schedule risk for testing to support design and operations - delayed schedule	Includes both schedule delay and schedule extension risk. Schedule extension risk = (Estimated TWRS equipment replacement time) x (Equipment replacement probability if no testing is performed other than that included in Alternative 4) x (1 - ((Probability that Alternative 1, 2, or 3 testing will identify a risk reducing design change, assuming facility startup is delayed to provide optimum input to the design) + (Added probability Alternative 1, 2, or 3 testing will reduce risk during startup and operations if testing is continues throughout the operations period)) Schedule delay = the amount of time in facility startup is delayed to provide optimum input of testing data into the design. Refer to Appendix D values used in the calculation.
5	Incremental cost risk for design support testing - TPA schedule	Cost associated with schedule risk (Column 1) including (loss of productive utilization of personnel during the time the operations is extended) + ((the cost of design and installation of the replacement equipment) x (probability the equipment will be replaced)). Refer to Appendix D values used in the calculation.
6	Incremental cost risk for design and operations support testing - TPA schedule	Cost associated with schedule risk (Column 2) including (loss of productive utilization of personnel during the time the operations is extended) + ((the cost of design and installation of the replacement equipment) x (probability the equipment will be replaced)). Refer to Appendix D values used in the calculation.

Table 6-4. Definition of Table 6-3 Elements. (Page 2 of 3)

Column	Title	Definition
7	Incremental cost risk for design support testing - delayed schedule	Cost associated with schedule risk (Column 3) including (loss of productive utilization of personnel during the time the operations is extended) + ((the cost of design and installation of the replacement equipment) x (probability the equipment will be replaced)) + (cost associated with the extension of tank waste safety and operations program caused by schedule delay). Refer to Appendix D values used in the calculation.
8	Incremental cost risk for design and operations support testing - delayed schedule	Cost associated with schedule risk (Column 4) including (loss of productive utilization of personnel during the time the operations is extended) + ((the cost of design and installation of the replacement equipment) x (probability the equipment will be replaced)) + (cost associated with the extension of tank waste safety and operations program caused by schedule delay). Refer to Appendix D values used in the calculation.
9	Worker risk attributed to schedule risk for support of design - TPA schedule	(Industrial injury and transportation injury risk associated with the extension of the schedule, Column 1) + (industrial injury and transportation injury risk associated with design and installation of replacement equipment). Refer to Appendix D values used in the calculation.
10	Worker risk attributed to schedule risk for support of design and operations - TPA schedule	(Industrial injury and transportation injury risk associated with the extension of the schedule, Column 2) + (industrial injury and transportation injury risk associated with design and installation of replacement equipment). Refer to Appendix D values used in the calculation.
11	Worker risk attributed to schedule risk for support of design - delayed schedule	(Industrial injury and transportation injury risk associated with the extension of the schedule, Column 3) + (industrial injury and transportation injury risk associated with design and installation of replacement equipment) + (industrial injury and transportation injury risk associated with the delay of the facility startup required to provide optimum input to the design). Refer to Appendix D values used in the calculation.
12	Worker risk attributed to schedule risk for support risk for support of design and operations - delayed schedule	(Industrial injury and transportation injury risk associated with the extension of the schedule, Column 4) + (industrial injury and transportation injury risk associated with design and installation of replacement equipment) + (industrial injury and transportation injury risk associated with the delay of the facility startup required to provide optimum input to the design). Refer to Appendix D values used in the calculation.
13	Worker risk attributed to schedule risk for support of design - TPA schedule	(Industrial death, transportation death, and radiation exposure risk associated with the extension of the schedule, Column 1) + (industrial death, transportation death, and radiation exposure risk associated with design and installation of replacement equipment). Refer to Appendix D values used in the calculation.

Table 6-4. Definition of Table 6-3 Elements. (Page 3 of 3)

Column	Title	Definition
14	Worker risk attributed to schedule risk for support of design and operations - TPA schedule	(Industrial death, transportation death, and radiation exposure risk associated with the extension of the schedule, Column 2) + (industrial death, transportation death, and radiation exposure risk associated with design and installation of replacement equipment). Refer to Appendix D values used in the calculation.
15	Worker risk attributed to schedule risk for support of design - delayed schedule	(Industrial death, transportation death, and radiation exposure risk associated with the extension of the schedule, Column 3) + (industrial death, transportation death, and radiation exposure risk associated with design and installation of replacement equipment) + (industrial death, transportation death, and radiation exposure risk associated with the delay of the facility startup required to provide optimum input to the design). Refer to Appendix D values used in the calculation.
16	Worker risk attributed to schedule risk for support of design and operations - delayed schedule	(Industrial death, transportation death, and radiation exposure risk associated with the extension of the schedule, Column 4) + (industrial death, transportation death, and radiation exposure risk associated with design and installation of replacement equipment) + (industrial death, transportation death, and radiation exposure risk associated with the delay of the facility startup required to provide optimum input to the design). Refer to Appendix D values used in the calculation.

Comparison of the summary results and benefits for all four alternatives yielded the following observations:

- The alternative with the greatest schedule extension risk was the Baseline Alternative followed by Alternatives 3, 2, and 1. The difference between alternatives ranged from 0% for support of design under the Tri-Party Agreement schedule scenario, to 25% for support of design, startup, and operations under the delayed schedule. However, the estimated maximum reduction in schedule extension risk is only 0.33 years for implementation of Alternative 1 testing. When the schedule delay to allow testing result input to design is added, Alternative 2 has the largest schedule risk.

- The schedule extension risk for Alternatives 2 and 3 are nearly the same; however, the schedule delay is significantly larger for Alternative 2.

- The four alternatives rank in the same order for cost risk and worker risk as was seen for schedule risk.

- The maximum potential cost risk reduction, $140 million is associated with implementation of Alternative 1 under Tri-Party Agreement schedule conditions for support of operations as well as design. The cost of implementation of this alternative is likely in excess of $1,000 million depending on how long during operations testing is performed. No cost benefit is associated with testing to support design because of the large cost of the delays.

- Trends for injury risk and death risk follow the same trends as the cost and schedule risk.

6.2.1 Baseline Alternative (Alternative 4)

Summary results for the Baseline Alternative schedule risk are presented in Table 6-5. Results for schedule risk, and the cost impact, injury impact, and death impact associated with the level of testing supported by the Baseline Alternative are presented by function as well as total risk. The Baseline Alternative contains the lowest level of testing of the four alternatives. However, an extensive testing program is planned under this alternative, which includes testing with simulants at laboratory-, bench-, pilot-, large-, and full-scale levels, along with testing at laboratory- and bench-scale in-tank demonstrations using actual wastes. Based on this level of testing, the schedule extension risk associated with the Baseline Alternative was estimated to be 1.39 years. It was estimated that a 0.1-year (5-week) decrease of schedule extension risk would result if testing continued into the operations phase. The retrieval function accounts for most of the schedule extension risk reduction. The basis for the risk reduction of additional retrieval testing is that a wide range of waste characteristics were postulated to exist in the tank waste. Since waste characteristics are a

Table 6-5. Baseline Alternative Schedule Risk.

Baseline Alternative Schedule Risk	Schedule Risk for Testing to Support Design-TPA Schedule	Schedule Risk for Testing to Support Design & Operations-TPA Schedule	Schedule Risk for Testing to Support Design-Delayed Schedule	Schedule Risk for Testing to Support Design & Operations-Delayed Schedule	Cost Risk for Design Support Testing-TPA Schedule	Cost Risk for Design & Operations Support Testing-TPA Schedule	Cost Risk for Design Support Testing-Delayed Schedule	Cost Risk for Design & Operations Support Testing-Delayed Schedule	Risk Attributed to Schedule Risk For Support of Design-TPA Schedule	Risk Attributed to Schedule Risk for Support of Design & Operations-TPA Sch.	Risk Attributed to Schedule Risk for Support of Design-Delayed Schedule	Risk Attributed to Sch. Risk for Support of Design & Operations-Delayed Sch.	Risk Attributed to Schedule Risk For Support of Design-TPA Schedule	Risk Attributed to Schedule Risk for Support of Design & Operations-TPA Sch.	Risk Attributed to Schedule Risk for Support of Design-Delayed Schedule	Risk Attributed to Sch. Risk for Support of Design & Operations-Delayed Sch.
	Risk (Yrs)				Cost Impact ($)				Worker Injury Impact				Worker Death Impact			
a. Retrieval	0.80	0.72	0.80	0.72	6.1E+08	5.7E+08	6.1E+08	5.7E+08	131	118	131	118	0.63	0.57	0.63	0.57
b. Pretreatment	0.10	0.10	0.10	0.10	9.6E+07	9.6E+07	9.6E+07	9.6E+07	24	24	24	24	0.11	0.11	0.11	0.11
c. LLW Vitrification	0.25	0.25	0.25	0.25	3.5E+08	3.5E+08	3.5E+08	3.5E+08	83	83	83	83	0.40	0.40	0.40	0.40
d. HLW Vitrification	0.23	0.23	0.23	0.23	2.8E+08	2.8E+08	2.8E+08	2.8E+08	64	64	64	64	0.32	0.32	0.32	0.32
e. SCHEDULE EXTENSION RISK (a + b' + c + d)	1.39	1.31	1.39	1.31	1.3E+09	1.3E+09	1.3E+09	1.3E+09	301	288	301	288	1.46	1.40	1.46	1.40
f. SCHEDULE DELAY RISK	0	0	0	0	0	0	0	0	0	0	0	0	0	0	0	0
g. TOTAL INCLUDING DELAY (e + f)	1.39	1.31	1.39	1.31	1.3E+09	1.3E+09	1.3E+09	1.3E+09	301	288	301	288	1.46	1.40	1.46	1.40

primary driver in retrieval technology, testing many different types of waste would have a greater impact on risk than other testing.

It was assumed that the testing planned for the Baseline Alternative is scheduled to support the Tri-Party Agreement schedule. Therefore, the schedule delay risk is 0, and the schedule risk for a delayed schedule was assumed to be the same as the schedule risk assuming the Tri-Party Agreement schedule.

The cost impact risk associated with the level of testing in the Baseline Alternative was $1,340 million for support of design. About 43% of the cost is associated with the cost of extending the tank waste safety and operations program. Nearly 30% of the cost risk is associated with replacement equipment capital costs. Most of this 30% is associated with the replacement costs of the two melters and the retrieval equipment. The replacement cost for each of these three systems was assumed to be approximately $1 billion each.

Risk of injury and death for retrieval, LLW vitrification, and HLW vitrification functions were similar in the Baseline Alternative. The risk of injury or death for pretreatment was a factor of four below the other three functions. The primary factor influencing the risk reduction is the lower schedule extension risk for the pretreatment function relative to the other functions.

6.2.2 Alternative 1

Table 6-6 presents the schedule risk results for Alternative 1. Alternative 1 contains LLW vitrification testing that was not included in either Alternative 2 or 3. The risk reducing benefit of large-scale pilot testing was considered to be nearly the same as those for small-scale pilot testing for the processes involved. Therefore, the only differences between Alternative 1 and Alternative 3 and the benefits of LLW vitrification testing. The benefits to LLW vitrification testing are similar to those of HLW vitrification testing since the processes are similar. Because of the additional function testing, Alternative 1 provides the greatest reduction in schedule extension risk. The results indicate that a 0.33-year (16.7-week) reduction of schedule extension risk may be possible over the Baseline Alternative for testing to support design, startup, and operations under the delayed schedule.

The delays required for coordinated testing input into pretreatment, LLW vitrification, and HLW vitrification were 5, 9, and 7.4 years, respectively. The schedule delay for Alternative 1 is the delay of the HLW vitrification, or 7.4 years.

6.2.3 Alternative 2

The Alternative 2 schedule extension risk and schedule delay risk results are presented in Table 6-7. The results are nearly the same as the results of Alternative 3. The primary difference is that Alternative 2 is an integrated pilot plant and Alternative 3 is a functional pilot plant. The LLW vitrification and retrieval testing is not planned for either alternative.

Table 6-6. Alternative 1 Incremental Schedule Risk.

Alternative 1. Schedule Risk	Schedule Risk for Testing to Support Design-TPA Schedule	Schedule Risk for Testing to Support Design & Operations-TPA Schedule	Schedule Risk for Testing to Support Design-Delayed Schedule	Schedule Risk for Testing to Support Design & Operations-Delayed Schedule	Cost Risk for Design Support Testing-TPA Schedule	Cost Risk for Design & Operations Support Testing-TPA Schedule	Cost Risk for Design Support Testing-Delayed Schedule	Cost Risk for Design & Operations Support Testing-Delayed Schedule	Risk Attributed to Schedule Risk For Support of Design-TPA Schedule	Risk Attributed to Schedule Risk for Support of Design & Operations-TPA Sch.	Risk Attributed to Schedule Risk for Support of Design-Delayed Schedule	Risk Attributed to Sch. Risk for Support of Design & Operations-Delayed Sch.	Risk Attributed to Schedule Risk For Support of Design-TPA Schedule	Risk Attributed to Schedule Risk for Support of Design & Operations-TPA Sch.	Risk Attributed to Schedule Risk for Support of Design-Delayed Schedule	Risk Attributed to Sch. Risk for Support of Design & Operations-Delayed Sch.
	Risk (Yrs)				Cost Impact ($)				Worker Injury Impact				Worker Death Impact			
a. Retrieval	0.80	0.72	0.80	0.72	6.1E+08	5.7E+08	6.1E+08	5.7E+08	131	118	131	118	0.64	0.58	0.64	0.58
b. Pretreatment	0.10	0.08	0.05	0.04	9.6E+07	7.7E+07	4.9E+07	4.0E+07	24	19	12	10	0.11	0.09	0.06	0.05
c. LLW Vitrification	0.25	0.20	0.13	0.11	3.5E+08	2.8E+08	1.8E+08	1.5E+08	83	67	43	35	0.40	0.32	0.21	0.17
d. HLW Vitrification	0.23	0.19	0.13	0.11	2.8E+08	2.3E+08	1.5E+08	1.2E+08	64	52	34	28	0.32	0.26	0.17	0.14
e. SCHEDULE EXTENSION RISK (a + b + c + d)	1.39	1.20	1.11	0.98	1.3E+09	1.2E+09	9.9E+08	8.8E+08	301	256	220	191	1.47	1.25	1.07	0.93
f. SCHEDULE DELAY RISK	0	0	8.51	8.38	0	0	4.0E+09	3.8E+09	0	0	924	895	0	0	4.36	4.22
g. TOTAL INCLUDING DELAY (e + f)	1.39	1.20	9.62	9.35	1.3E+09	1.2E+09	4.9E+09	4.7E+09	301	256	1144	1086	1.47	1.25	5.43	5.15

Table 6-7. Alternative 2 Incremental Schedule Risk.

Alternative 2. Schedule Risk	Schedule Risk for Testing to Support Design-TPA Schedule	Schedule Risk for Testing to Support Design & Operations-TPA Schedule	Schedule Risk for Testing to Support Design-Delayed Schedule	Schedule Risk for Testing to Support Design & Operations-Delayed Schedule	Cost Risk for Design Support Testing-TPA Schedule	Cost Risk for Design & Operations Support Testing-TPA Schedule	Cost Risk for Design Support Testing-Delayed Schedule	Cost Risk for Design & Operations Support Testing-Delayed Schedule	Risk Attributed to Schedule Risk For Support of Design-TPA Schedule	Risk Attributed to Schedule Risk for Support of Design & Operations-TPA Sch.	Risk Attributed to Schedule Risk for Support of Design-Delayed Schedule	Risk Attributed to Sch. Risk for Support of Design & Operations-Delayed Sch.	Risk Attributed to Schedule Risk For Support of Design-TPA Schedule	Risk Attributed to Schedule Risk for Support of Design & Operations-TPA Sch.	Risk Attributed to Schedule Risk for Support of Design-Delayed Schedule	Risk Attributed to Sch. Risk for Support of Design & Operations-Delayed Sch.
	Risk (Yrs)				Cost Impact ($)				Worker Injury Impact				Worker Death Impact			
a. Retrieval	0.80	0.72	0.80	0.72	6.1E+08	5.7E+08	6.1E+08	5.7E+08	131	118	131	118	0.64	0.58	0.64	0.58
b. Pretreatment	0.10	0.08	0.05	0.04	9.6E+07	7.7E+07	4.5E+07	3.5E+07	24	19	11	9	0.11	0.09	0.05	0.04
c. LLW Vitrification	0.25	0.23	0.25	0.23	3.5E+08	3.3E+08	3.5E+08	3.3E+08	83	75	83	75	0.40	0.36	0.40	0.36
d. HLW Vitrification	0.23	0.19	0.12	0.10	2.8E+08	2.3E+08	1.4E+08	1.1E+08	64	52	31	25	0.32	0.26	0.16	0.13
e. SCHEDULE EXTENSION RISK (a + b + c + d)	1.39	1.22	1.22	1.08	1.3E+09	1.2E+09	1.1E+09	1.0E+09	301	264	256	227	1.47	1.29	1.25	1.10
f. SCHEDULE DELAY RISK	0	0	9.62	9.48	0	0	4.5E+09	4.4E+09	0	0	1056	1026	0	0	4.98	4.84
g. TOTAL INCLUDING DELAY (e + f)	1.39	1.22	10.83	10.56	1.3E+09	1.2E+09	5.6E+09	5.4E+09	301	264	1312	1253	1.47	1.29	6.23	5.94

Integration of pilot equipment is primarily expected to benefit pretreatment activities; however, pretreatment activities contribute a relatively small fraction of the overall risk, therefore the benefits of integration are relatively small.

Testing to meet the delayed schedule would require greater delays than Alternative 3 because a new facility must be constructed. The schedule delay risk in pretreatment to accommodate this schedule is 12 years. The delay in HLW vitrification to meet the coordinated design schedule is estimated at 8.4 years. Since HLW vitrification is the last of the four functions to come online, the Alternative 2 schedule delay was estimated to be 8.4 years under the delayed schedule, three years later than in Alternative 3. However, the analysis did not consider the impacts of construction and startup of all of the functions at the same time. When the cost impacts of delays are included, Alternative 2 has the greatest increase in risk in all areas.

6.2.4 Alternative 3

A summary of results by function for schedule extension risk and schedule delay risks associated with the level of testing planned for Alternative 3 is presented in Table 6-8. The basic trends in the data are very similar to those associated with the Baseline Alternative. The risks associated with testing to support design, based on the Tri-Party Agreement schedule, are the same as in the Baseline Alternative since Alternative 3 testing is not expected to be complete in time to support design. Testing to support a delayed schedule is expected to delay retrieval, pretreatment, and LLW vitrification by two years. Optimum testing under Alternative 3 was estimated to require a 5.4-year delay in HLW vitrification. Therefore, it was assumed that the overall TWRS program end date would be delayed by 5.4 years in the optimum testing case. The cost and worker risk impacts associated with this delay are considerably greater than the benefit in reduction of risk associated with schedule extension.

The results of the Alternative 3 risk estimates indicate that the biggest gains would be in the area of HLW vitrification. Since retrieval and LLW vitrification are not being tested in this alternative and pretreatment was estimated to have a relatively low schedule extension risk, this result is consistent.

6.3 PROCESS MISHAP RISKS

The TWRS program and the four testing alternatives were evaluated. The major risks identified in both evaluations are from accidents in the HLW and LLW melters and possible plugging of filters and systems.

The method used to evaluate the accident and nonroutine maintenance mishap risks is based on a unitless value derived from multiplying the potential frequency of an accident by the estimated consequence factor. This system is described Sections 4.4 and 5.4 and is based on the PPG system used by WHC (WHC 1993). The resulting value, or PPG value, is used for

Table 6-8. Alternative 3 Incremental Schedule Risk.

Alternative 3. Schedule Risk	Schedule Risk for Testing to Support Design-TPA Schedule	Schedule Risk for Testing to Support Design & Operations-TPA Schedule	Schedule Risk for Testing to Support Design-Delayed Schedule	Schedule Risk for Testing to Support Design & Operations-Delayed Schedule	Cost Risk for Design Support Testing-TPA Schedule	Cost Risk for Design & Operations Support Testing-TPA Schedule	Cost Risk for Design Support Testing-Delayed Schedule	Cost Risk for Design & Operations Support Testing-Delayed Schedule	Risk Attributed to Schedule Risk For Support of Design-TPA Schedule	Risk Attributed to Schedule Risk for Support of Design & Operations-TPA Sch.	Risk Attributed to Schedule Risk for Support of Design-Delayed Schedule	Risk Attributed to Sch. Risk for Support of Design & Operations-Delayed Sch.	Risk Attributed to Schedule Risk For Support of Design-TPA Schedule	Risk Attributed to Schedule Risk for Support of Design & Operations-TPA Sch.	Risk Attributed to Schedule Risk for Support of Design-Delayed Schedule	Risk Attributed to Sch. Risk for Support of Design & Operations-Delayed Sch.
	Risk (Yrs)				Cost Impact ($)				Worker Injury Impact				Worker Death Impact			
a. Retrieval	0.80	0.72	0.80	0.72	6.1E+08	5.7E+08	6.1E+08	5.7E+08	131	118	131	118	0.63	0.57	0.63	0.57
b. Pretreatment	0.10	0.08	0.05	0.04	9.6E+07	7.7E+07	4.9E+07	4.0E+07	24	19	12	10	0.11	0.09	0.06	0.05
c. LLW Vitrification	0.25	0.23	0.25	0.23	3.5E+08	3.3E+08	3.5E+08	3.3E+08	83	75	83	75	0.40	0.36	0.40	0.36
d. HLW Vitrification	0.23	0.19	0.13	0.11	2.8E+08	2.3E+08	1.5E+08	1.2E+08	64	52	34	28	0.32	0.26	0.17	0.14
e. SCHEDULE EXTENSION RISK (a + b + c + d)	1.39	1.22	1.23	1.10	1.3E+09	1.2E+09	1.2E+09	1.1E+09	301	264	260	231	1.46	1.28	1.26	1.12
f. SCHEDULE DELAY RISK	0	0	6.63	6.50	0	0	3.3E+09	3.2E+09	0	0	774	745	0	0	3.62	3.48
g. TOTAL INCLUDING DELAY (e + f)	1.39	1.22	7.86	7.59	1.3E+09	1.2E+09	4.5E+09	4.3E+09	301	264	1034	975	1.46	1.28	4.88	4.60

comparisons between processes. The higher the PPG value, the more risk is attributed to the process.

Much of the decision making for this evaluation was based on the source term data compiled for each module. These data are described in Section 6.4 and more fully provided in Appendices D-6 and D-7. Based on this information, PPG values were prepared in accordance with the previously described methodologies and assumptions. The PPG values were recorded on standard forms to aid in evaluation and retrieval. The PPG values for TWRS program risks are contained in Appendix D-2. The PPG values for the four testing alternatives are contained in Appendix D-3.

6.3.1 TWRS Program Risks

The major risks from the TWRS program system are from accidents in the LLW and HLW vitrification units. The impacts of these accidents could be very significant. The potential for an accident in the vitrification units is also considered to be higher than the potentials for accidents in other units. The nonroutine maintenance risk is the potential for plugging the filters in the pretreatment systems.

The TWRS program risks were previously evaluated (WHC 1994). The PPG values from this previous evaluation were reviewed and modified based on changes to the modules and re-evaluation of the risks. In most cases, the risk associated with the replacement equipment was considered to be very similar to that of the initial equipment. As an example, the HLW vitrification feed system was changed significantly. A system using kerosene was removed and a system including a component using glycolic acid was added. The comparative risks of kerosene, which is combustible, with the acid, which may cause skin, eye, or mucous membrane injury could not be further quantified with current information. Some values, particularly the higher risk component values were raised in this new evaluation based on additional analysis of potential consequences.

6.3.1.1 TWRS Program - Unit and Module Comparisons

<u>Accidents Events.</u> Most of the TWRS program operations are considered to have a very low risk with little consequence. The major accident contributors are the HLW and LLW melters. Of the approximately 70 units evaluated, only five had a PPG value greater than 1. The PPG values for these five units are provided in Table 6-9. Most other units had a value less than 0.1.

As can be seen from this table, both the LLW melter and HLW melter were given a PPG value of 10. This is due to the very high temperatures generated and the relatively high risks of injuries, releases, and cost expenditures. Module 8, which contains the HLW melter, had three of the five highest PPG values. Comparative components in the LLW system from Module 5 were not considered as large of a risk due to lower estimated source terms. The SST waste retrieval system was ranked highly due to the extra potential for environmental

releases. Individual PPG accident event and nonroutine maintenance values for each module are contained in Appendix D-2.

Nonroutine Maintenance. Directly comparing the total PPG values from accidents with the total PPG values for nonroutine maintenance can be misleading. Since there are several maintenance categories, the numerical sum of these PPG values is often greater than the sums of the accident PPG values. If the accident and maintenance PPG values were normalized based on total risk and consequence, the accident PPG values would likely be larger. For most units, this difference would still be small because there is little risk.

Table 6-9. TWRS Program Five Highest Accident Risks Based on PPG Values.*

Module	PPG Value
M.1.A, SST Waste Retrieval System	2.5
M.5.B, LLW Melter	10
M.8.A, HLW Centrifuge System	2.5
M.8.B, HLW Melter Feed System	2.5
M.8.D, HLW Glass Melter	10

* PPG values are unitless values that compare the consequences of accidents to their potential frequencies. The system is based on the Priority Planning Grid System (WHC 1993).

6.3.1.2 TWRS Program - Function Level Comparisons. Plugging of filters and plugging/caking of components is considered the greatest potential nonroutine maintenance risk of the TWRS program operation. The module that will likely be most affected is Module M.3.C, the sludge washing process. Other modules potentially affected include the LLW glass/sulfur mixer (M.6.B), LLW melter (M.5.B), the LLW glass quencher M.5.C, and several components in the HLW module. Plugging or caking of these latter components is considered more likely due to the nature of the materials and equipment design.

Overall Comparison. Since the HLW module contains three of the five highest PPG values, the HLW function also has the highest cumulative PPG value. This is shown in Table 6-10 and Figure 6-7. The LLW function has a higher overall risk from nonroutine maintenance primarily from the greater number of components that may be affected by plugging or caking and the effects of summing several maintenance risks as described in the previous section. The higher potential for plugging or caking is also the reason why the nonroutine maintenance risks are significantly higher than the accident risks in the pretreatment function.

Table 6-10. TWRS Program PPG Evaluation Summary. (Page 1 of 2)

	By Module		
	Accident Mishap Risk	Nonroutine Maintenance Mishap Risk	Total
Retrieval Module 1	2.5501	2.152	4.7021
Retrieval Module 2	1.0501	2.05225	3.10235
Pretreatment Module 3	0.1501	2.9827	3.1328
Pretreatment Module 4	0.31	0.8347	1.1447
Pretreament Module 11	0.11	0.1243	0.2343
LLW Vitrification Module 5	11.35	3.0545	14.4045
LLW Vitrification Module 6	0.2	5.4055	5.6055
LLW Vitrification Module 10	0.315	2.2563	2.5713
LLW Vitrification Module 12	0.1103	1.1617	1.272
HLW Vitrification Module 7	0.5	1.202	1.702
HLW Vitrification Module 8	15.1	6.904	22.004
HLW Vitrification Module 9	0.1	0.8015	0.9015
HLW Vitrification Module 13	0.0122	0.5659	0.5781
TOTALS	31.8578	29.49735	61.35515

Note: PPG values are unitless.

Table 6-10. TWRS Program PPG Evaluation Summary. (Page 2 of 2)

	By Function		
	Accident Mishap Risk	Nonroutine Maintenance Mishap Risk	Total
Retrieval Modules 1 & 2	3.6002	4.20425	7.80445
Pretreatment Modules 3, 4, & 11	0.5701	3.9417	4.5118
LLW Vitrification Modules 5, 6, 10 & 12	11.9753	11.878	23.8533
HLW Vitrification Modules 7, 8, 9, & 13	15.7122	9.4734	25.1856
TOTALS	31.8578	29.49735	61.35515

Note: PPG values are unitless.

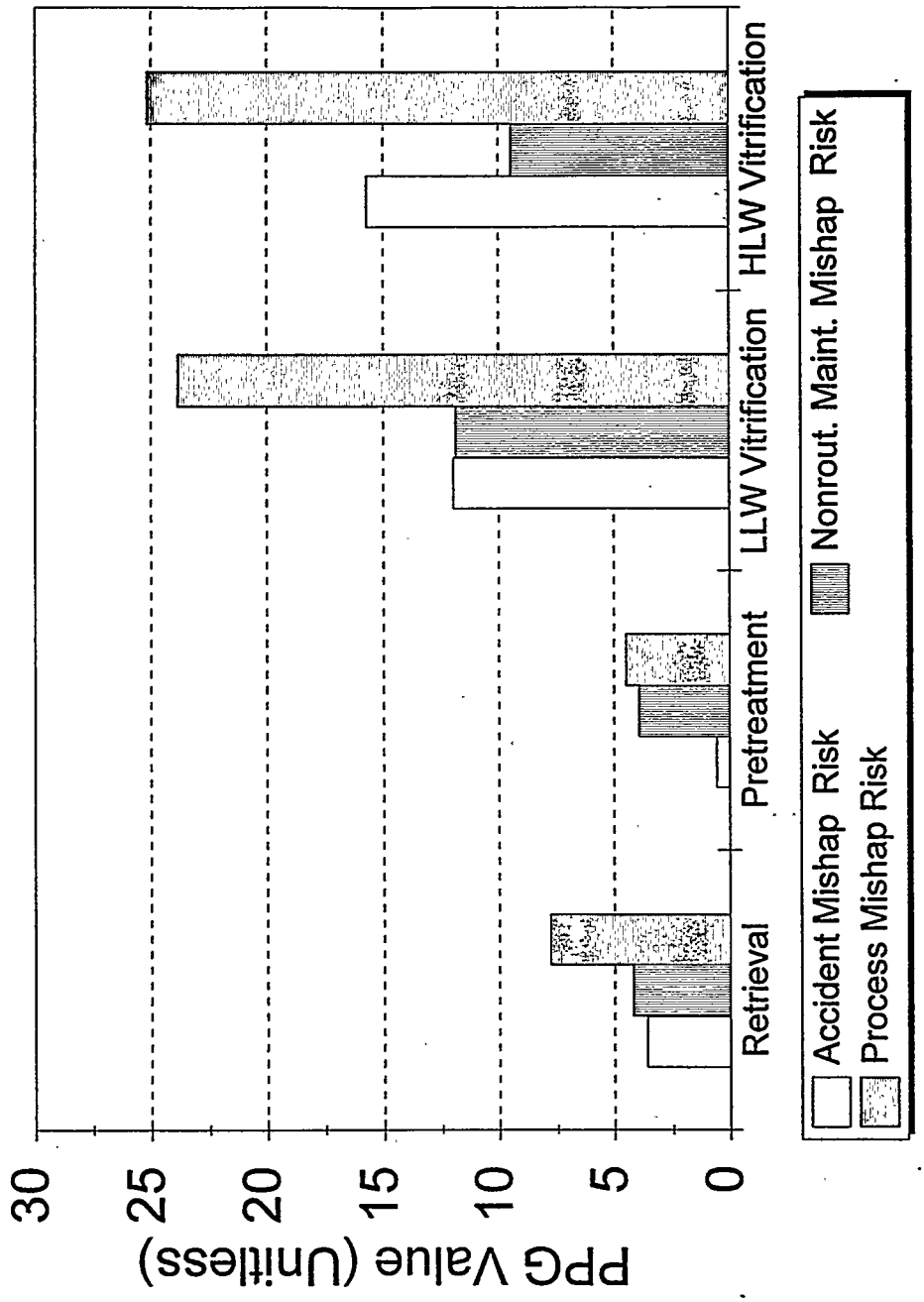

Figure 6-7. Functional Level Comparison of TWRS Program Process Mishap Risks.

Annual Comparison. To convert the PPG values to annualized values, each PPG value was divided by the total number of years of operations with actual wastes for the related activity. This smaller, annual PPG value was then distributed equally to each of the years of operation. Summation by year of these annual PPG values is provided in Table 6-11 and Figure 6-8. As expected, the highest PPG values are during the periods when all of the functions are active, from approximately FY 2011 to FY 2019.

6.3.2 Testing Alternatives Risks

This section establishes potential accident event and nonroutine maintenance risks resulting from implementing the four testing alternatives described in Section 2. The information contained in this section provides summary information only. To develop this summary information, each unit of the Baseline Alternative was evaluated in accordance with the PPG methodology and assumptions described in Sections 4.4 and 5.4 respectively. Once completed, the additional tests from the other alternatives were also evaluated. The PPG values for each test and each alternative are contained in Appendix D-3. Results are summed in Appendix D-4. These summed results were used for the overall comparisons presented in this section.

Annualized PPG values were developed and used for the annual comparison summaries. The annualized PPG values, based on alternative, year, type of test, and type of risk are contained in Appendix D-5.

The tables, figures, and appendices in this section cover the time frame from the present to FY 2012. This is because no testing was scheduled to extend past this time.

6.3.2.1 Overall Testing Alternatives Comparison. The Baseline Alternative had the lowest overall PPG value, and therefore the lowest overall accident event and nonroutine maintenance risk. This result is expected because the Baseline Alternative also had the least amount of testing. As the level of testing increased from the Baseline Alternative to Alternative 1, so did the PPG values. Alternative 1 had the highest PPG values because it included pilot plant tests of the pretreatment systems and HLW vitrification. Summary information comparing each alternative is contained in Table 6-12 and Figures 6-9 and 6-10. In addition to the relative ranking of the alternatives, Table 6-12 and Figure 6-9 indicate that the biggest accident event and nonroutine maintenance risk differences are in HLW vitrification. There were no differences in retrieval because there were no testing differences. The changes in pretreatment risks are the result of: (1) adding functional small-scale pilot plant testing with actual wastes in Alternative 3, (2) changing to small-scale integrated pilot plant testing in Alternative 2, and (3) changing again to large-scale pilot plant testing in Alternative 1. This is also the pattern for HLW vitrification. The LLW vitrification risk did not change significantly because the only test added was small-scale pilot plant testing using actual waste in Alternative 1. Although this added risk to this alternative, the comparative risk was considered small. As shown in Figure 6-10, the relative risks due to accident events was higher than the relative risks due to nonroutine maintenance.

Table 6-11. TWRS Program Process Mishap Risks Annual Summary

ANNUAL SUMMARY RISK DATA

TWRS OPERATIONAL BASE LINE

	Start Year	Stop Year	Initial PPG	Annual PPG	FY 95	FY 96	FY 97	FY 98	FY 99	FY 0	FY 1	FY 2	FY 3	FY 4	FY 5	FY 6	FY 7	FY 8	FY 9	FY 10	FY 11	FY 12
Accident Mishap Risk			31.858		0	0	0.164	0.164	0.164	0.164	0.164	0.164	0.164	0.164	0.902	0.902	0.902	0.902	1.650	1.650	1.650	1.650
Retrieval	1997	2018	3.600	0.164			0.164	0.164	0.164	0.164	0.164	0.164	0.164	0.164	0.164	0.164	0.164	0.164	0.164	0.164	0.164	0.164
Pretreatment	2005	2021	0.570	0.034											0.034	0.034	0.034	0.034	0.034	0.034	0.034	0.034
LLW Vitrification	2005	2021	11.975	0.704											0.704	0.704	0.704	0.704	0.704	0.704	0.704	0.704
HLW Vitrification	2009	2029	15.712	0.748															0.748	0.748	0.748	0.748
Nonrout. Maint. Mishap Risk			29.497		0	0	0.191	0.191	0.191	0.191	0.191	0.191	0.191	0.191	1.122	1.122	1.122	1.122	1.573	1.573	1.573	1.573
Retrieval	1997	2018	4.204	0.191			0.191	0.191	0.191	0.191	0.191	0.191	0.191	0.191	0.191	0.191	0.191	0.191	0.191	0.191	0.191	0.191
Pretreatment	2005	2021	3.942	0.232											0.232	0.232	0.232	0.232	0.232	0.232	0.232	0.232
LLW Vitrification	2005	2021	11.878	0.699											0.699	0.699	0.699	0.699	0.699	0.699	0.699	0.699
HLW Vitrification	2009	2029	9.473	0.451															0.451	0.451	0.451	0.451
Process Mishap Risk			61.355		0	0	0.355	0.355	0.355	0.355	0.355	0.355	0.355	0.355	2.023	2.023	2.023	2.023	3.223	3.223	3.223	3.223
Retrieval	1997	2018	7.804	0.355			0.355	0.355	0.355	0.355	0.355	0.355	0.355	0.355	0.355	0.355	0.355	0.355	0.355	0.355	0.355	0.355
Pretreatment	2005	2021	4.512	0.265											0.265	0.265	0.265	0.265	0.265	0.265	0.265	0.265
LLW Vitrification	2005	2021	23.853	1.403											1.403	1.403	1.403	1.403	1.403	1.403	1.403	1.403
HLW Vitrification	2009	2029	25.186	1.199															1.199	1.199	1.199	1.199

ANNUAL SUMMARY RISK DATA

TWRS OPERATIONAL BASE LINE

	FY 13	FY 14	FY 15	FY 16	FY 17	FY 18	FY 19	FY 20	FY 21	FY 22	FY 23	FY 24	FY 25	FY 26	FY 27	FY 28	FY 29	FY 30	FY 31	FY 32	FY 33	FY 34	FY 35	FY 36	FY 37	FY 38	FY 39	FY 40
Accident Mishap Risk	1.650	1.650	1.650	1.650	1.650	1.650	1.486	1.486	1.486	0.748	0.748	0.748	0.748	0.748	0.748	0.748	0.748	0	0	0	0	0	0	0	0	0	0	0
Retrieval	0.164	0.164	0.164	0.164	0.164	0.164																						
Pretreatment	0.034	0.034	0.034	0.034	0.034	0.034	0.034	0.034	0.034																			
LLW Vitrification	0.704	0.704	0.704	0.704	0.704	0.704	0.704	0.704	0.704																			
HLW Vitrification	0.748	0.748	0.748	0.748	0.748	0.748	0.748	0.748	0.748	0.748	0.748	0.748	0.748	0.748	0.748	0.748	0.748											
Nonrout. Maint. Mishap Risk	1.573	1.573	1.573	1.573	1.573	1.573	1.382	1.382	1.382	0.451	0.451	0.451	0.451	0.451	0.451	0.451	0.451	0	0	0	0	0	0	0	0	0	0	0
Retrieval	0.191	0.191	0.191	0.191	0.191	0.191																						
Pretreatment	0.232	0.232	0.232	0.232	0.232	0.232	0.232	0.232	0.232																			
LLW Vitrification	0.699	0.699	0.699	0.699	0.699	0.699	0.699	0.699	0.699																			
HLW Vitrification	0.451	0.451	0.451	0.451	0.451	0.451	0.451	0.451	0.451	0.451	0.451	0.451	0.451	0.451	0.451	0.451	0.451											
Process Mishap Risk	3.223	3.223	3.223	3.223	3.223	3.223	2.868	2.868	2.868	1.199	1.199	1.199	1.199	1.199	1.199	1.199	1.199	0	0	0	0	0	0	0	0	0	0	0
Retrieval	0.355	0.355	0.355	0.355	0.355	0.355																						
Pretreatment	0.265	0.265	0.265	0.265	0.265	0.265	0.265	0.265	0.265																			
LLW Vitrification	1.403	1.403	1.403	1.403	1.403	1.403	1.403	1.403	1.403																			
HLW Vitrification	1.199	1.199	1.199	1.199	1.199	1.199	1.199	1.199	1.199	1.199	1.199	1.199	1.199	1.199	1.199	1.199	1.199											

(1) Totals based on original PPG scoring, not yearly values. Sum of yearly values may not equal PPG total due to rounding annual PPG values in whole year increments.

Note: PPG values are unitless

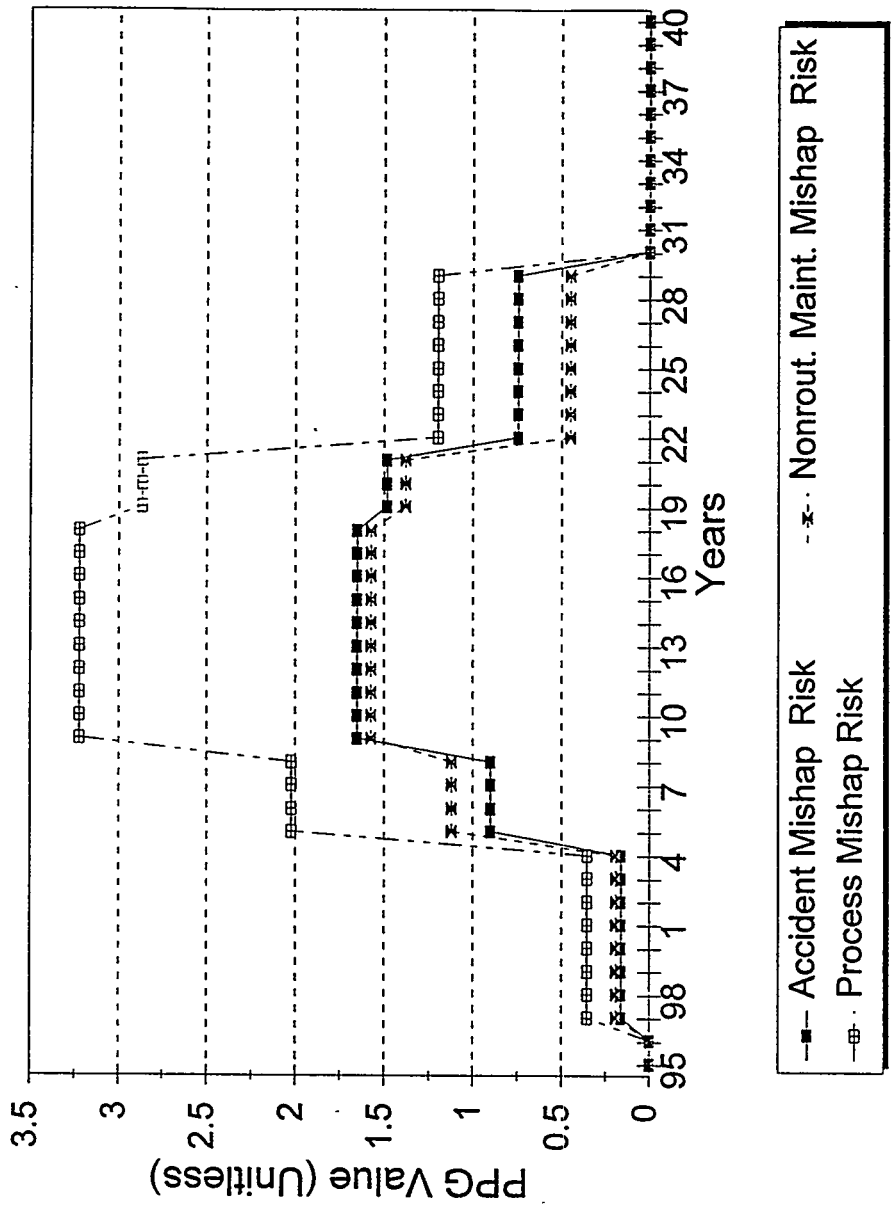

Figure 6-8. TWRS Program Process Mishap Risks.

Table 6-12. Testing Alternatives PPG Summary Values.

	TOTALS
Accident Mishap Risk	
ALTERNATIVE 1	38.636
ALTERNATIVE 2	30.806
ALTERNATIVE 3	28.552
BASELINE ALTERNATIVE	28.276
Nonroutine Maintenance Mishap Risk	
ALTERNATIVE 1	17.261
ALTERNATIVE 2	16.385
ALTERNATIVE 3	14.830
BASELINE ALTERNATIVE	14.665
Total Process Mishap Risk	
ALTERNATIVE 1	55.897
ALTERNATIVE 2	47.191
ALTERNATIVE 3	43.381
BASELINE ALTERNATIVE	42.941

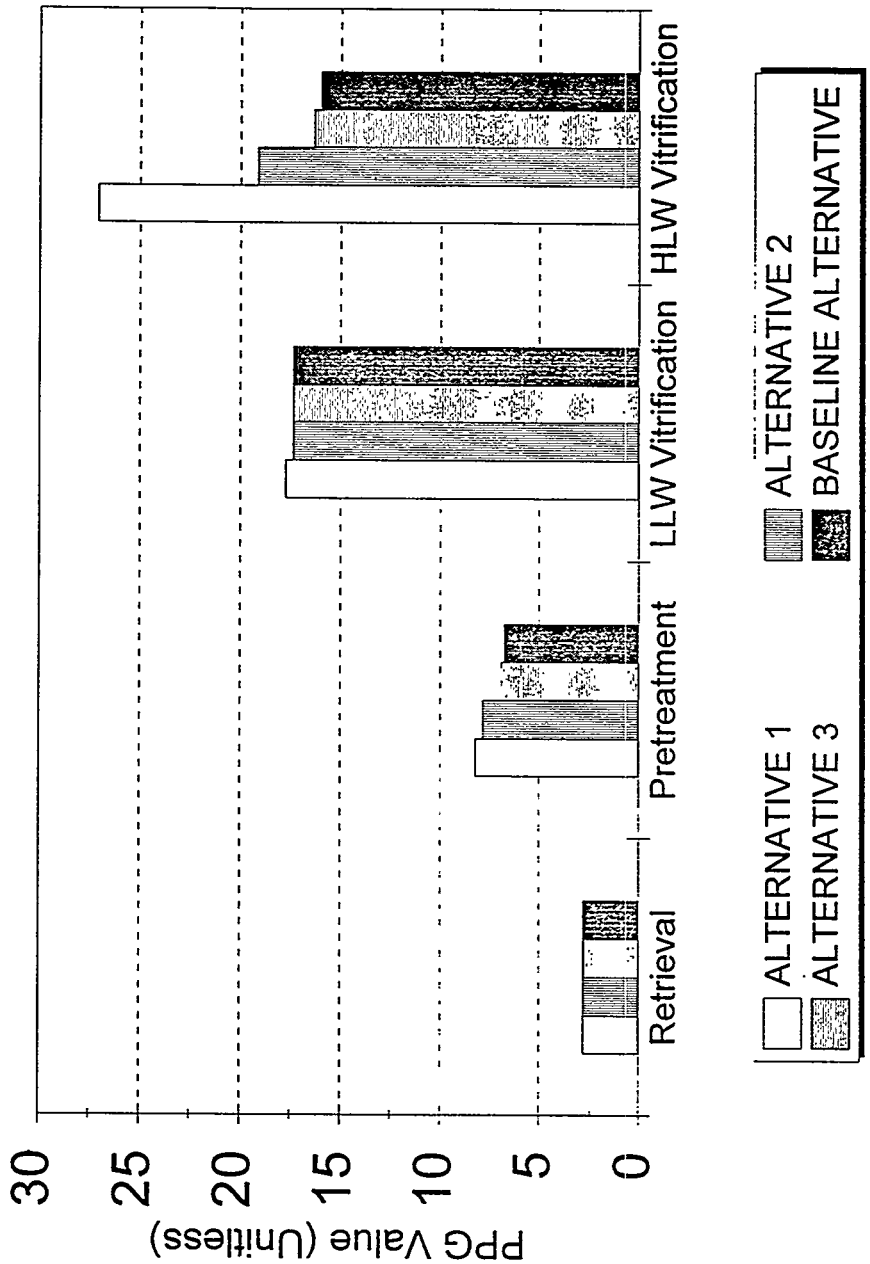

Figure 6-9. Process Mishap Risks.

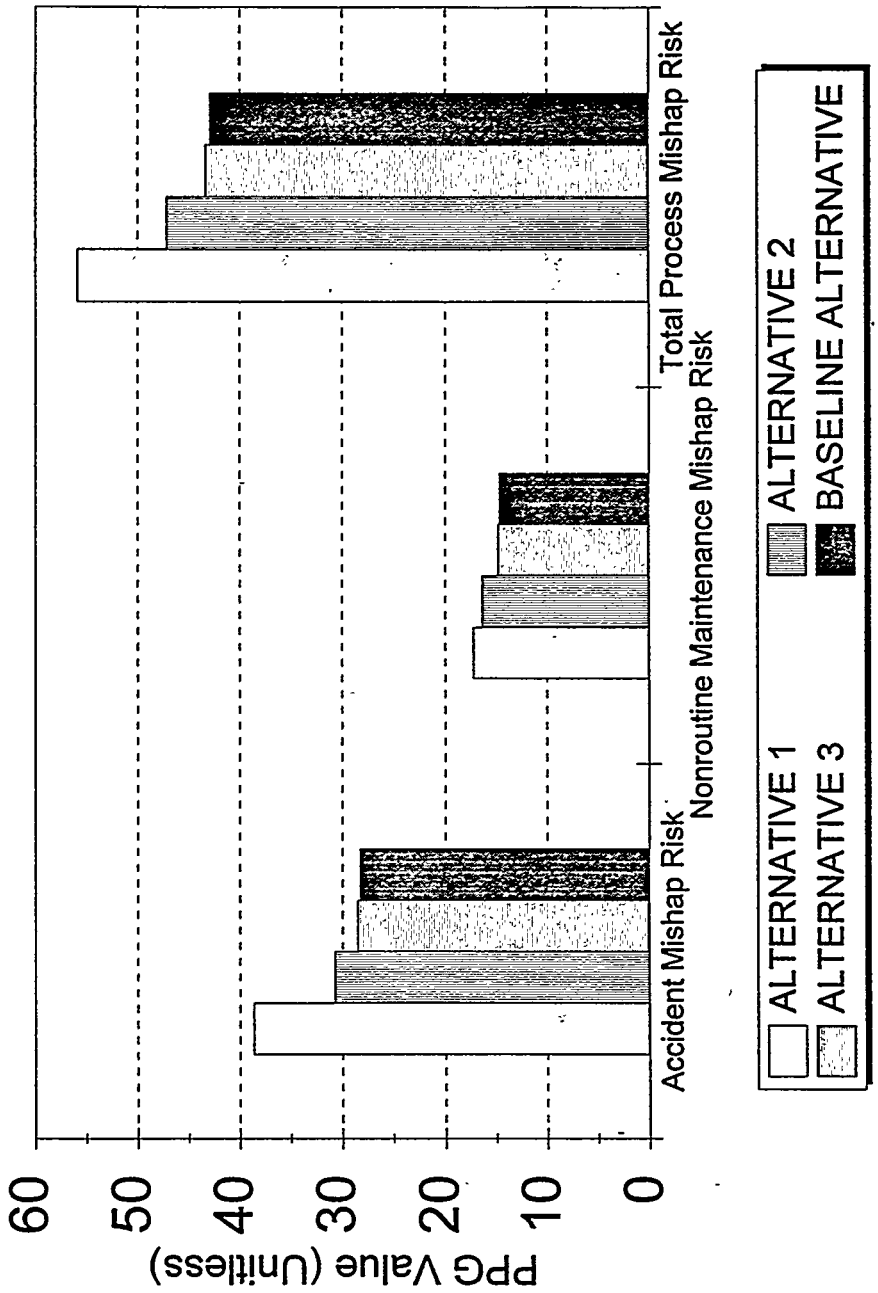

Figure 6-10. Process Mishap Risks for Four Testing Alternatives.

6.3.2.2 Testing Alternatives Annual Comparison. The PPG values were divided among the years in the same manner as used for the TWRS program, i.e., the start and stop time of operations using actual waste was identified and the PPG values were divided evenly among those years. Table 6-13 provides tabulated information comparing the annual PPG values based on alternative and type of risk. Figures 6-11, 6-12, and 6-13 graphically display this data. Figure 6-11 compares the accident event risks, Figure 6-12 compares nonroutine maintenance risks, and Figure 6-13 combines the risks to form the total process mishap risks.

The highest accident event risk period, as shown in Figure 6-11 was from FY 2005 to FY 2006. This is the period in which full-scale testing of LLW vitrification using actual waste is scheduled. Since only two years were identified for the full-scale testing of LLW vitrification, the original PPG value was only cut in half, resulting in a large value. The accident risk for Alternative 1 is higher than the others during this time because the large-scale pilot plant is scheduled to start operations in FY 2005. Another peak is from FY 1999 to FY 2002, when HLW vitrification is scheduled for testing.

An additional peak occurred for nonroutine maintenance risks in FY 2008 and 2009. As shown in Figure 6-11, this peak was the highest nonroutine maintenance risk peak. This peak was due primarily to the full-scale testing of the pretreatment system using actual waste. Plugging and caking of the filters in this system was the primary concern for this high PPG value.

6.3.2.3 Alternative Evaluation. This section summarizes the accident and maintenance PPG value risks for each alternative. The information in the appendices, particularly Appendix D-4, summary of accident event and nonroutine maintenance PPG values, provides additional data on the impacts of increased testing.

Baseline Alternative. The major contributors to the Baseline Alternative risk were the LLW and HLW vitrification full-scale demonstration testing using actual waste. The risk of this testing was considered to be the equivalent of full-scale operations. This was done because the reduction in source term, as would be expected from testing, was offset by the inherent greater risks from testing. Accident event risks were greater than nonroutine maintenance risks.

Alternative 1. The risks of the large-scale pilot plant, which was the major difference in Alternative 1 testing, are comparatively large. It was estimated that these risks would be similar to the risks of operating the full facility. The rationale for this estimation was the same as that used for full-scale operations. The relative change in risk between Alternative 1 and Alternative 2 was the largest step change between any two alternatives.

Alternative 2. Alternative 2 replaced the Alternative 3 small-scale functional pilot plant testing using actual waste with small-scale integrated pilot plant testing. There was a greater risk differential between Alternatives 2 and the Baseline Alternative than between Alternatives 3 and the Baseline Alternative. Based on preliminary data, the integrated pilot plant in Alternative 2 was expected to have a greater risk than the small-scale functional pilot

Table 6-13. Testing Alternatives Process Mishap Risks Annual Summary.

PPG values (Unitless)

	Totals(1)	FY 95	FY 96	FY 97	FY 98	FY 99	FY 0	FY 1	FY 2	FY 3	FY 4	FY 5	FY 6	FY 7	FY 8	FY 9	FY 10	FY(2) 11	FY 12
Accident Mishap Risk																			
ALTERNATIVE 1	38.636	0.079	0.028	0.036	0.034	3.147	3.147	3.147	3.184	0.938	0.916	7.588	7.588	2.588	2.665	1.786	1.708	0.000	0.000
ALTERNATIVE 2	30.806	0.079	0.028	0.036	0.034	3.147	3.147	3.147	3.147	0.902	0.879	5.879	5.903	0.903	0.981	0.101	0.024	0.024	0.000
ALTERNATIVE 3	28.552	0.079	0.028	0.036	0.034	3.156	3.156	3.156	3.147	0.943	0.921	5.921	5.921	0.921	0.999	0.078	0.000	0.000	0.000
BASELINE ALTERNATIVE	28.276	0.079	0.028	0.036	0.034	3.147	3.147	3.147	3.147	0.902	0.879	5.879	5.879	0.879	0.957	0.078	0.000	0.000	0.000
Accident Total	126.269	0.318	0.114	0.144	0.137	12.598	12.598	12.598	12.626	3.685	3.596	25.267	25.291	5.291	5.601	2.042	1.732	0.024	0.000
Nonrout. Maint. Mishap Risk																			
ALTERNATIVE 1	17.261	0.070	0.012	0.012	0.012	0.705	0.705	0.705	1.163	0.918	0.918	2.441	2.429	0.652	3.364	2.916	0.204	0.000	0.000
ALTERNATIVE 2	16.385	0.070	0.012	0.012	0.012	0.705	0.705	0.705	0.705	0.460	0.459	2.237	2.242	0.465	3.177	2.729	0.016	0.016	0.000
ALTERNATIVE 3	14.630	0.070	0.012	0.012	0.012	0.733	0.733	0.733	0.705	0.473	0.473	2.250	2.239	0.462	3.174	2.713	0.000	0.000	0.000
BASELINE ALTERNATIVE	14.685	0.070	0.012	0.012	0.012	0.705	0.705	0.705	0.705	0.460	0.459	2.237	2.226	0.448	3.161	2.713	0.000	0.000	0.000
Nonrout. Maint. Mishap Risk T	63.141	0.279	0.050	0.048	0.047	2.848	2.848	2.848	3.278	2.310	2.310	9.165	9.136	2.026	12.876	11.070	0.220	0.016	0.000
Total Process Mishap Risk																			
ALTERNATIVE 1	55.897	0.149	0.041	0.048	0.046	3.852	3.852	3.852	4.347	1.856	1.834	10.028	10.017	3.240	6.030	4.702	1.912	0.000	0.000
ALTERNATIVE 2	47.191	0.149	0.041	0.048	0.046	3.852	3.852	3.852	3.852	1.361	1.339	8.116	8.145	1.368	4.158	2.830	0.040	0.040	0.000
ALTERNATIVE 3	43.381	0.149	0.041	0.048	0.046	3.889	3.889	3.889	3.852	1.416	1.394	8.171	8.160	1.383	4.173	2.790	0.000	0.000	0.000
BASELINE ALTERNATIVE	42.941	0.149	0.041	0.048	0.046	3.852	3.852	3.852	3.852	1.361	1.339	8.116	8.105	1.328	4.118	2.790	0.000	0.000	0.000
Total	189.409	0.597	0.164	0.192	0.184	15.446	15.446	15.446	15.904	5.995	5.905	34.432	34.428	7.318	18.478	13.112	1.952	0.040	0.000

(1) Totals based on original PPG scoring, not yearly values. Sum of yearly values may not equal PPG total due to rounding annual PPG values in whole year increments.
(2) No Testing Scheduled After 2011

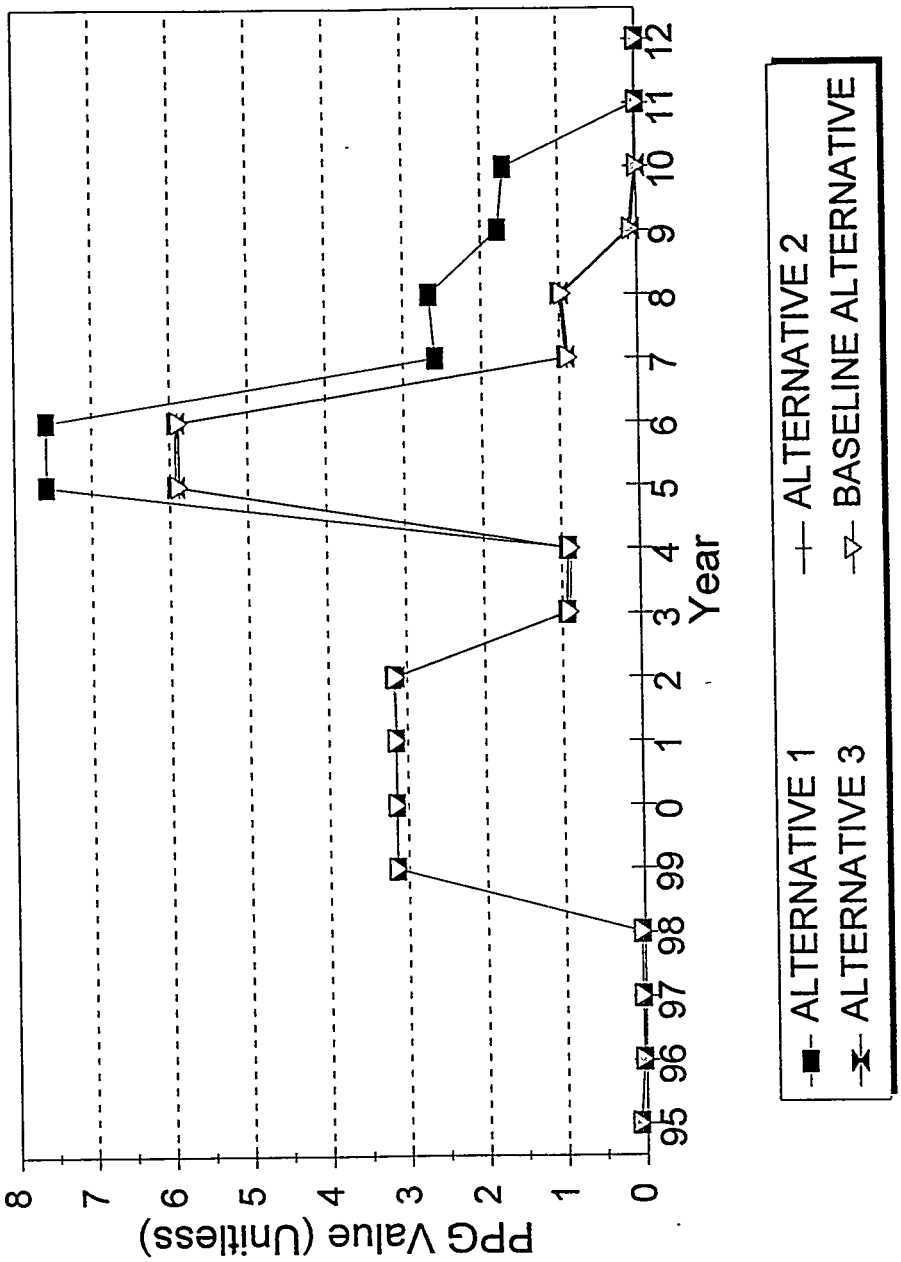

Figure 6-11. Annual Accident Mishap Risks for Testing Alternatives.

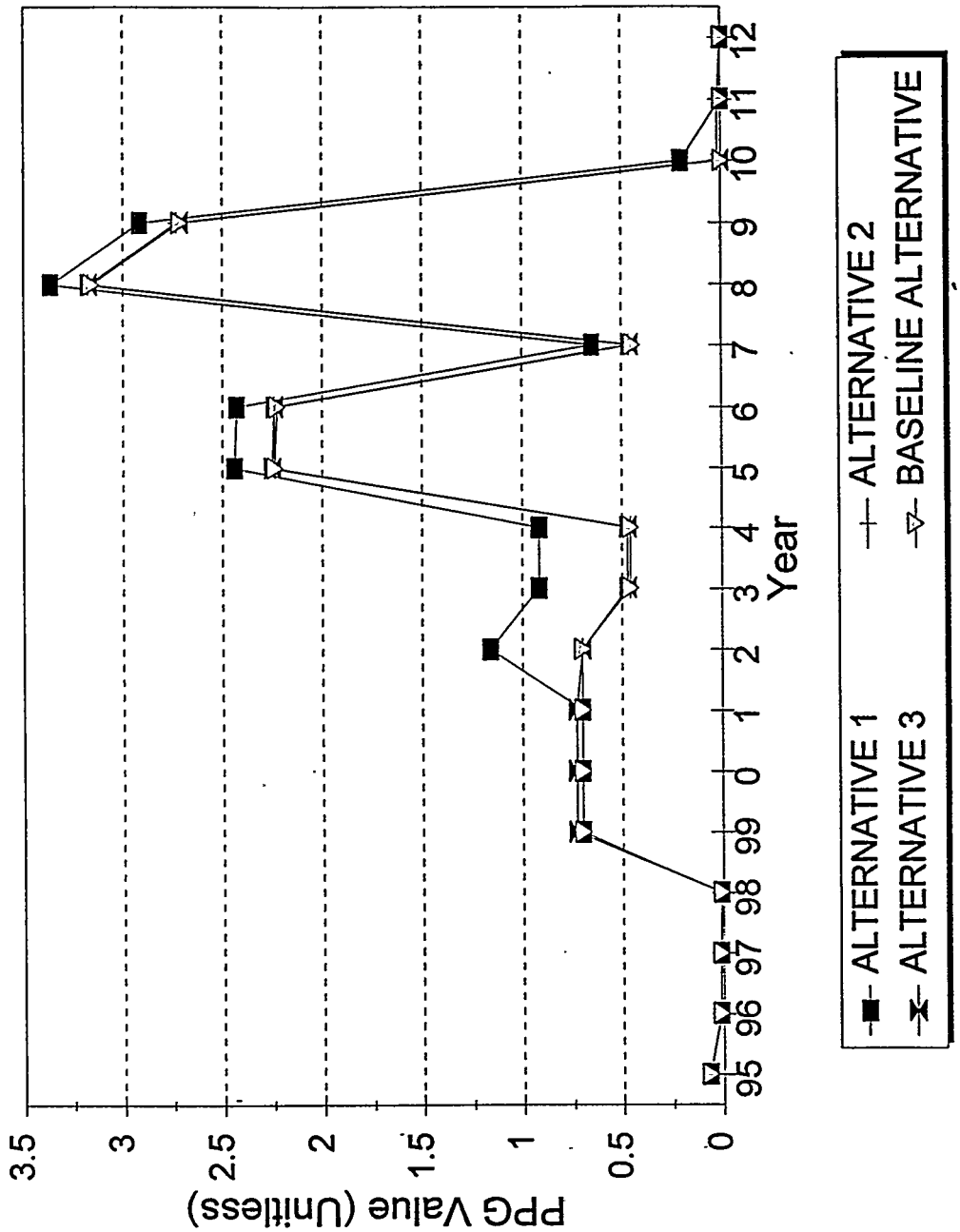

Figure 6-12. Annual Nonroutine Maintenance Risks For Testing Alternatives.

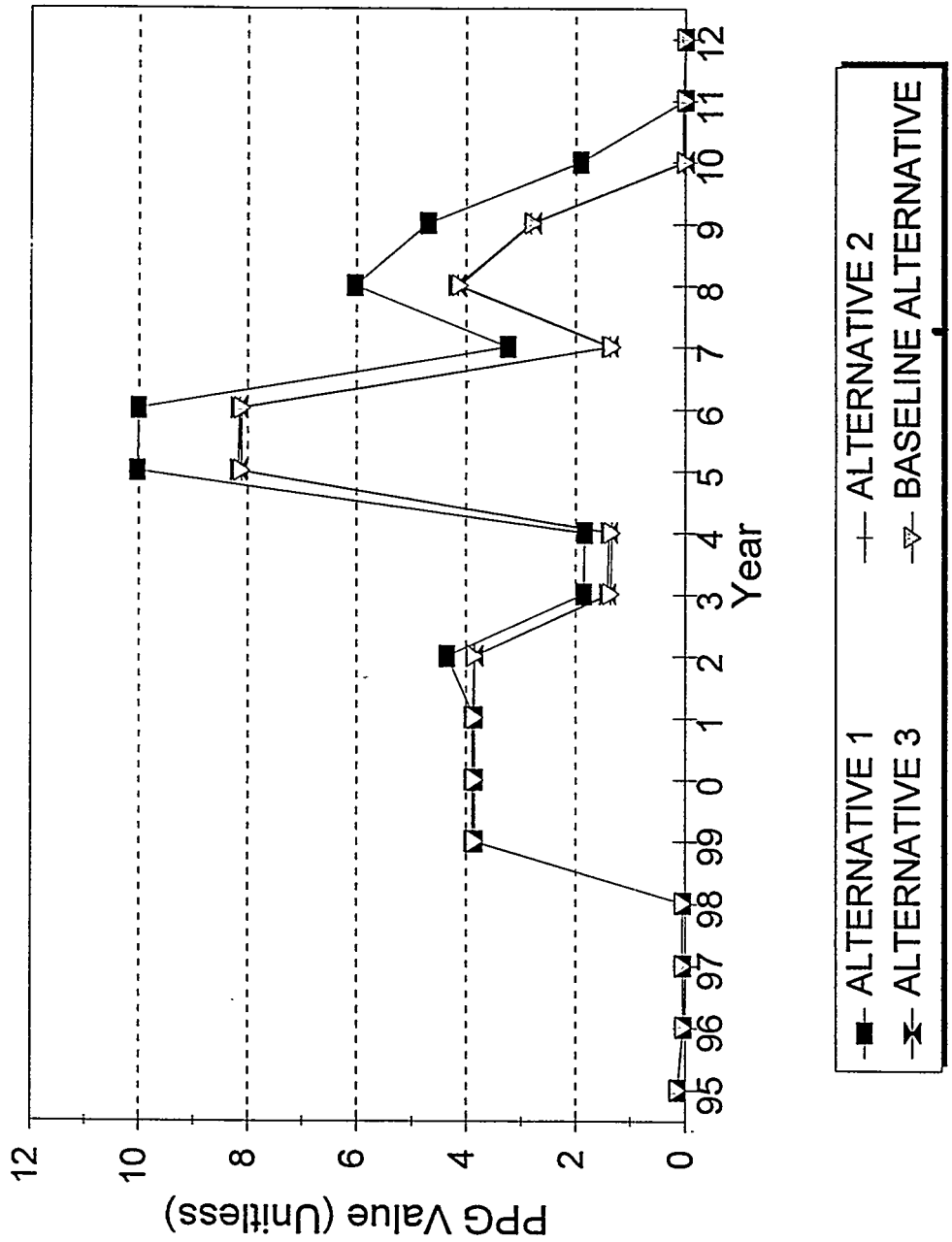

Figure 6-13. Annual Process Mishap Risks for Testing Alternatives.

plant testing using actual waste. As shown in Appendix D-4, the major risk contributor was from the more involved testing of HLW vitrification.

Alternative 3. In Alternative 3, small-scale functional pilot plant testing with actual waste was added. As shown in Table 6-12 and Figure 6-10, the total contribution to risk from this testing was considered to be relatively small, particularly when compared to larger testing.

6.4 HUMAN HEALTH RISKS

This section describes and summarizes the total worker injury and fatality risks due to industrial activities, transportation, and radiological exposures for TWRS operations and for each of the four testing alternatives. Tabulated worker risk results on a yearly basis are provided in Appendix D. This section also describes incremental public health risk resulting from new tank leakage. Appendix D provides worker module and unit fractional breakdowns, and unit radiological designations used to determine worker risk for individual operations.

6.4.1 Worker Risks

Injury and fatality risks during TWRS operations and the four alternatives are directly related to work force size. Worker risks increase during periods of high worker demand since the equations utilized in determining industrial, transportation, and cancer risks are dependent on worker FTEs. Risk assessment methodologies used to evaluate worker risk due to general industrial risk, transportation risk, and radiation are discussed in Section 4.5. A list of equations and variables used in worker risk calculations are presented in Appendix D-6. Tabulated worker risk results presented on a yearly basis are also contained in Appendix D-7.

For a more accurate estimation of worker risk, worker and work activities associated with the TWRS program operations and testing alternatives are categorized by management and engineering, construction/D&D crafts and laborers, maintenance crafts, operators, and infrastructure staff.

Total worker risks for the TWRS program operations and each of the four testing alternatives, in terms of injuries, fatalities, and cancer risk, are summarized in Tables 6-14 through 6-18. These totals are the sums of the annual risks for individual operations or tests during the TWRS operational period. Figures 6-14 through 6-25 compare total injury and fatality risks for TWRS operations and each of the four testing alternatives.

6.4.1.1 TWRS Operational Risks. A summary for the total injury and fatality risks due to retrieval, pretreatment, LLW vitrification, and HLW vitrification operations is presented in Table 6-14. Nearly all injuries can be attributed to industrial activities associated with the TWRS program. The main worker risk for the TWRS program can be attributed to LLW vitrification and HLW vitrification. Approximately 60% of all injuries and fatalities during

Table 6-14. Total Risks Summary.

OPERATIONS Total Risk Summary	Retrieval	Pretreatment	LLW Vitrification	HLW Vitrification	Total
Industrial Injury Risk (injuries)	1408	789	1866	2014	6076
Industrial Death Risk (fatalities)	3.5	1.6	4.3	4.1	13.4
Transportation Risk (injuries)	4.9	3.1	6.5	7.7	22.2
Transportation Risk (fatalities)	2.4	1.5	3.2	3.8	10.9
Radiation Exposure Risk (fatal cancers)	0.83	0.66	0.74	1.86	4.1
Total Injuries Total Fatalities	1413 6.7	792 3.8	1872 8.2	2022 9.7	6099 28.4

Table 6-15. Total Risks Summary (Baseline Alternative).

BASELINE (ALTERNATIVE 4) Total Risk Summary	Retrieval	Pretreatment	LLW Vitrification	HLW Vitrification
Industrial Injury Risk (injuries)	54	101	110	120
Industrial Death Risk (fatalities)	0.1	0.2	0.2	0.2
Transportation Risk (injuries)	0.2	0.4	0.5	0.5
Transportation Risk (fatalities)	0.1	0.2	0.2	0.2
Radiation Exposure Risk (fatal cancers)	0.03	0.06	0.03	0.08
Total Injuries Total Fatalities	54 0.3	102 0.4	110 0.4	120 0.5

Table 6-16. Total Risks Summary (Alternative 1).

ALTERNATIVE 1 Total Risk Summary	Retrieval	Pretreatment	LLW Vitrification	HLW Vitrification	Total
Industrial Injury Risk (injuries)	61	148	188	202	599
Industrial Death Risk (fatalities)	0.1	0.3	0.4	0.4	1.2
Transportation Risk (injuries)	0.3	0.6	0.7	0.8	2.3
Transportation Risk (fatalities)	0.1	0.3	0.3	0.4	1.1
Radiation Exposure Risk (fatal cancers)	0.03	0.08	0.06	0.13	0.3
Total Injuries Total Fatalities	61 0.3	149 0.7	189 0.8	202 0.9	601 2.7

Table 6-17. Total Risks Summary (Alternative 2).

ALTERNATIVE 2 Total Risk Summary	Retrieval	Pretreatment	LLW Vitrification	HLW Vitrification	Total
Industrial Injury Risk (injuries)	59	195	102	250	606
Industrial Death Risk (fatalities)	0.1	0.4	0.1	0.5	1.1
Transportation Risk (injuries)	0.3	0.7	0.5	1.0	2.4
Transportation Risk (fatalities)	0.1	0.4	0.2	0.5	1.2
Radiation Exposure Risk (fatal cancers)	0.03	0.10	0.03	0.19	0.4
Total Injuries Total Fatalities	59 0.3	196 0.9	103 0.4	251 1.1	608 2.7

Table 6-18. Total Risks Summary (Alternative 3).

ALTERNATIVE 3 Total Risk Summary	Retrieval	Pretreatment	LLW Vitrification	HLW Vitrification	Total
Industrial Injury Risk (injuries)	61	111	104	205	482
Industrial Death Risk (fatalities)	0.1	0.2	0.2	0.4	0.9
Transportation Risk (injuries)	0.3	0.5	0.5	0.8	2.0
Transportation Risk (fatalities)	0.1	0.2	0.2	0.4	1.0
Radiation Exposure Risk (fatal cancers)	0.03	0.06	0.03	0.14	0.3
Total Injuries Total Fatalities	62 0.3	111 0.5	105 0.4	206 0.9	484 2.1

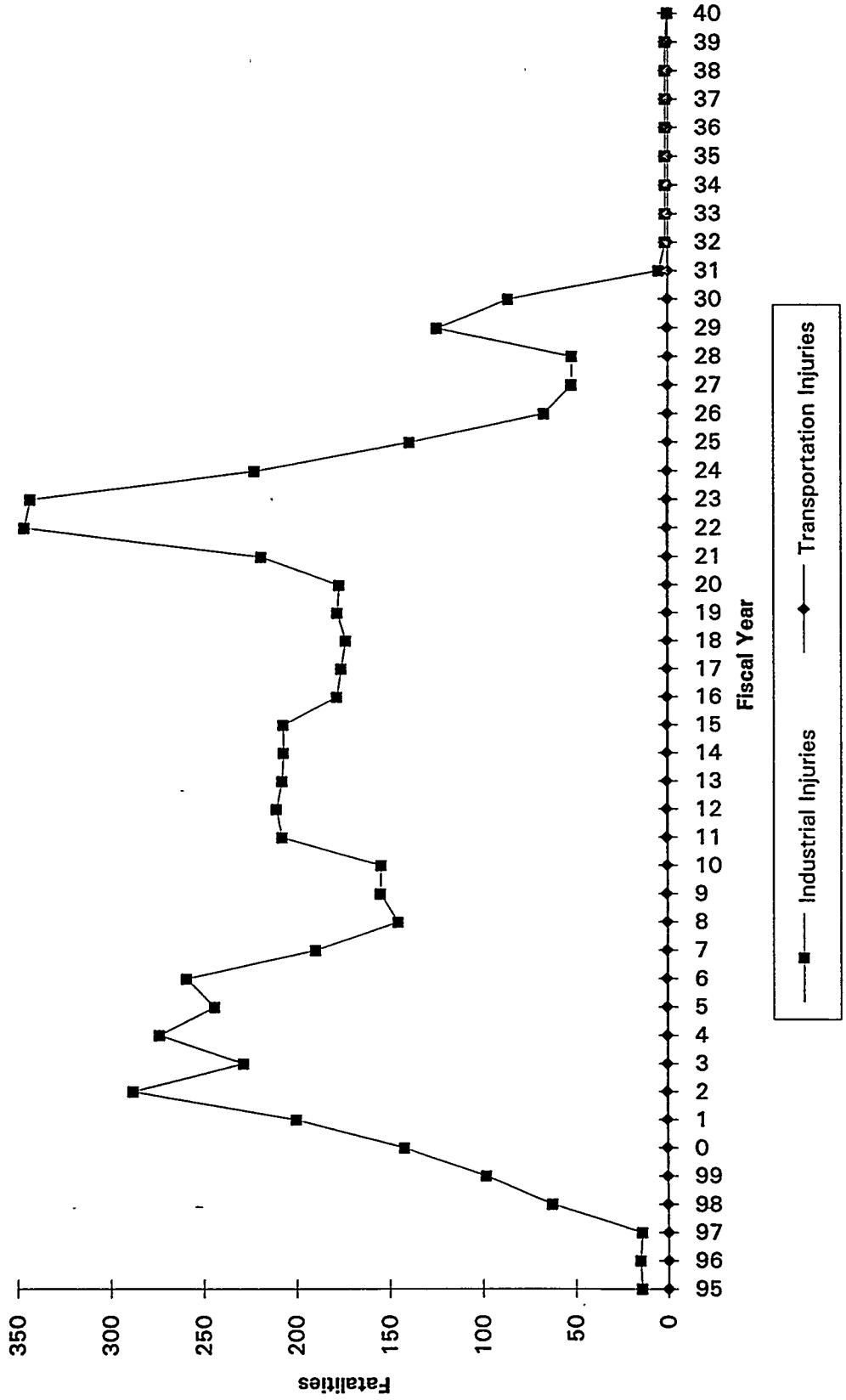

Figure 6-14. Total Injury Risks for TWRS Operations.

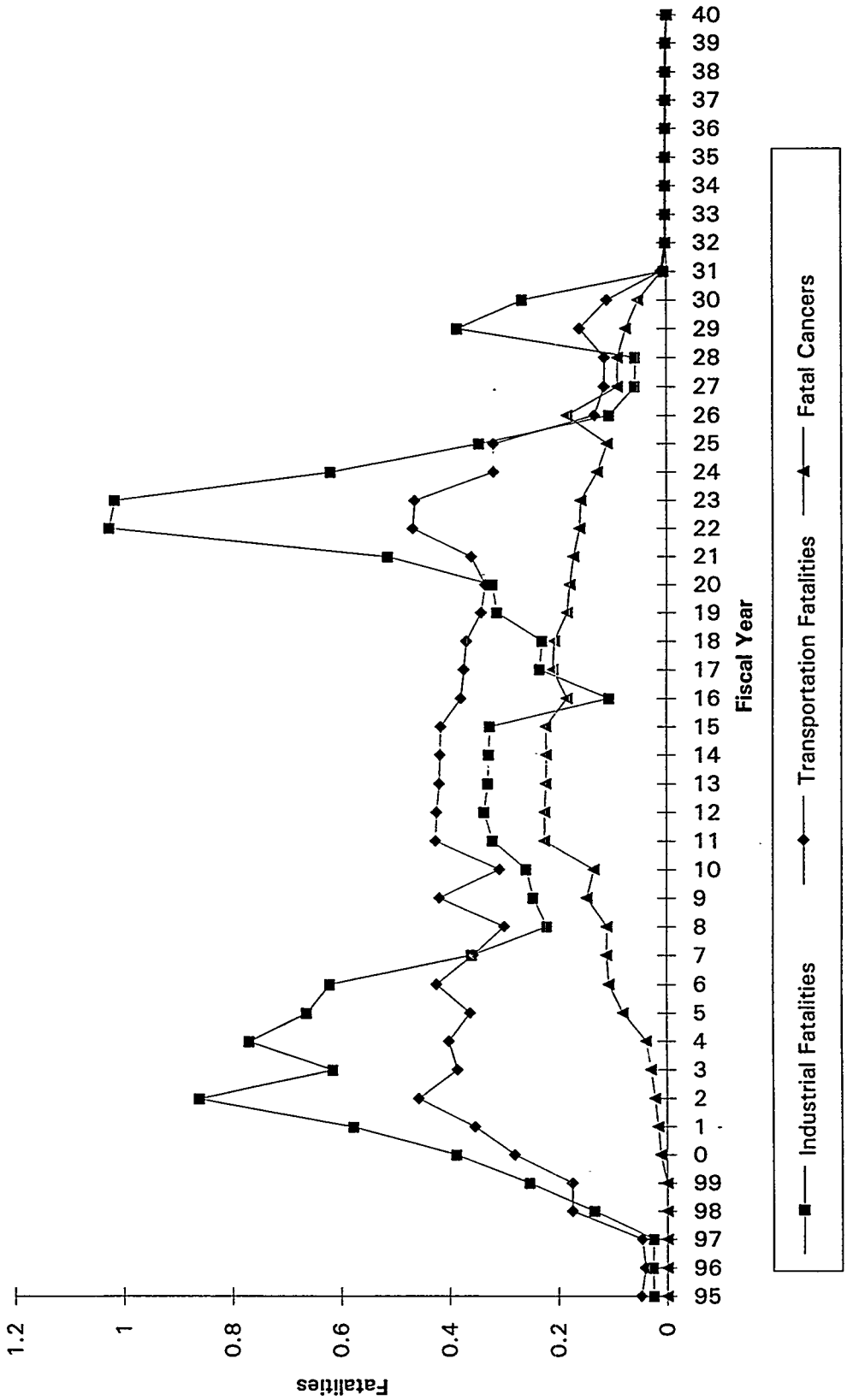

Figure 6-15. Total Fatality Risks for TWRS Operations.

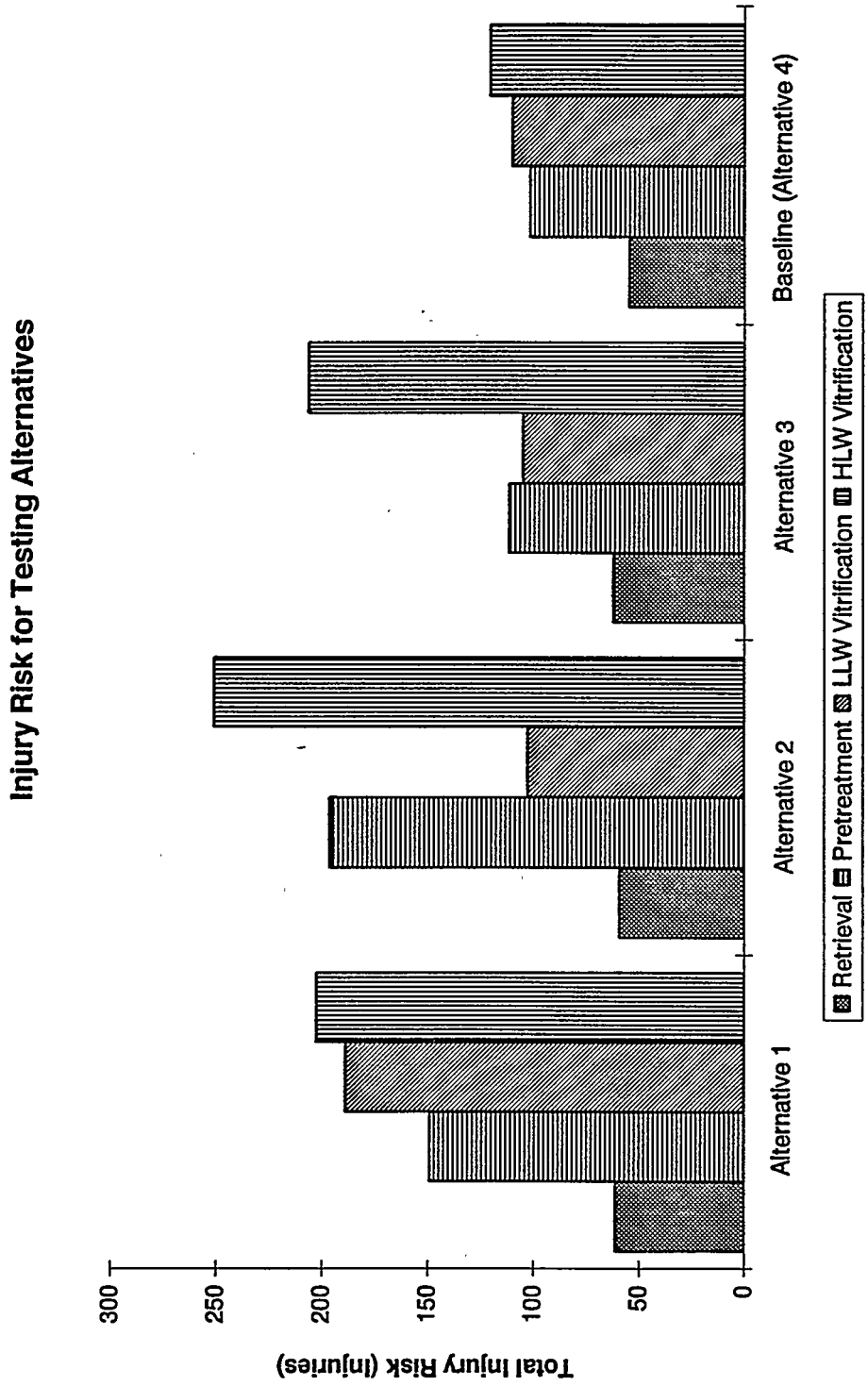

Figure 6-16. Injury Risks for Testing Alternatives.

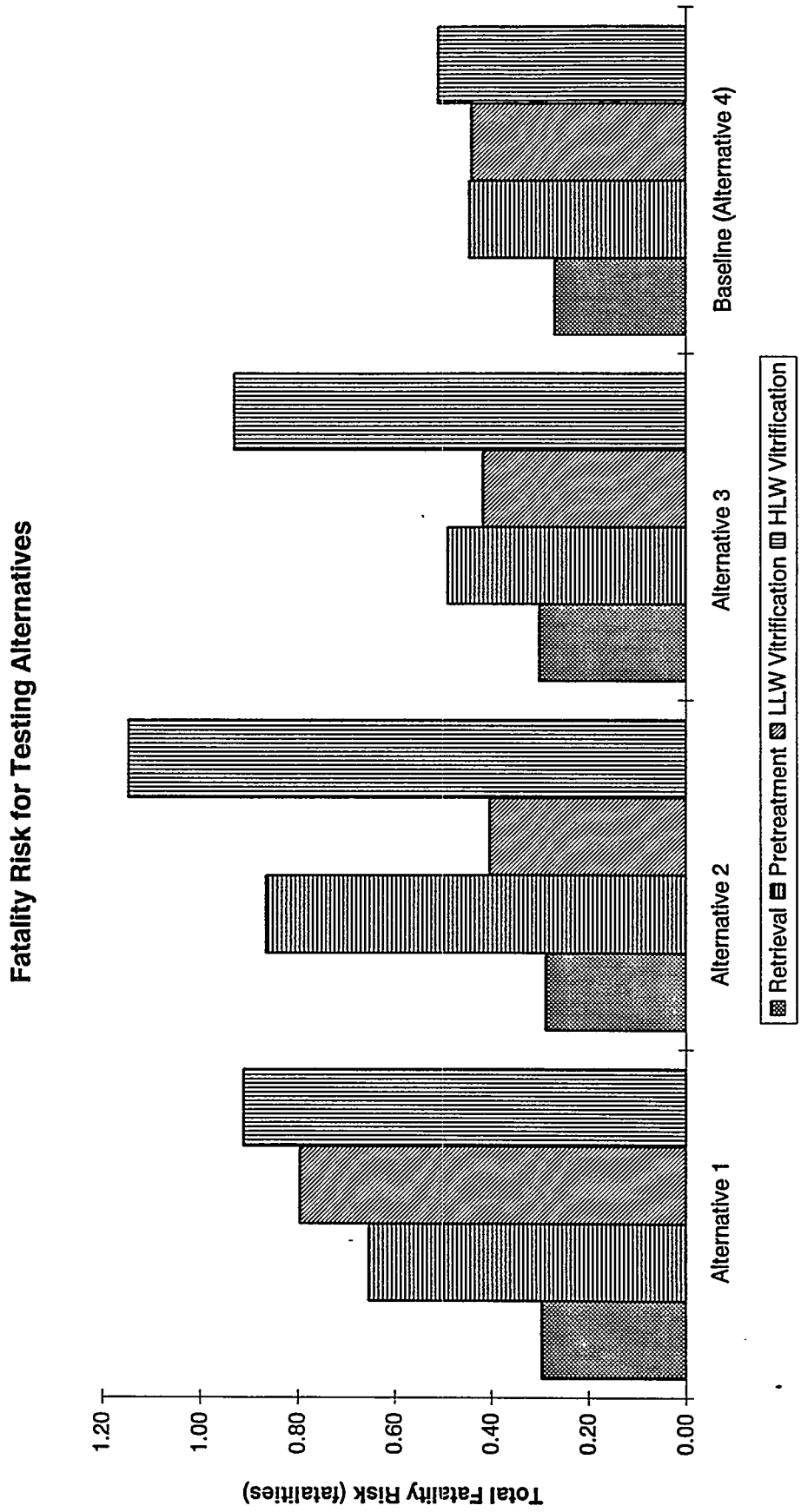

Figure 6-17. Fatality Risks for Testing Alternatives.

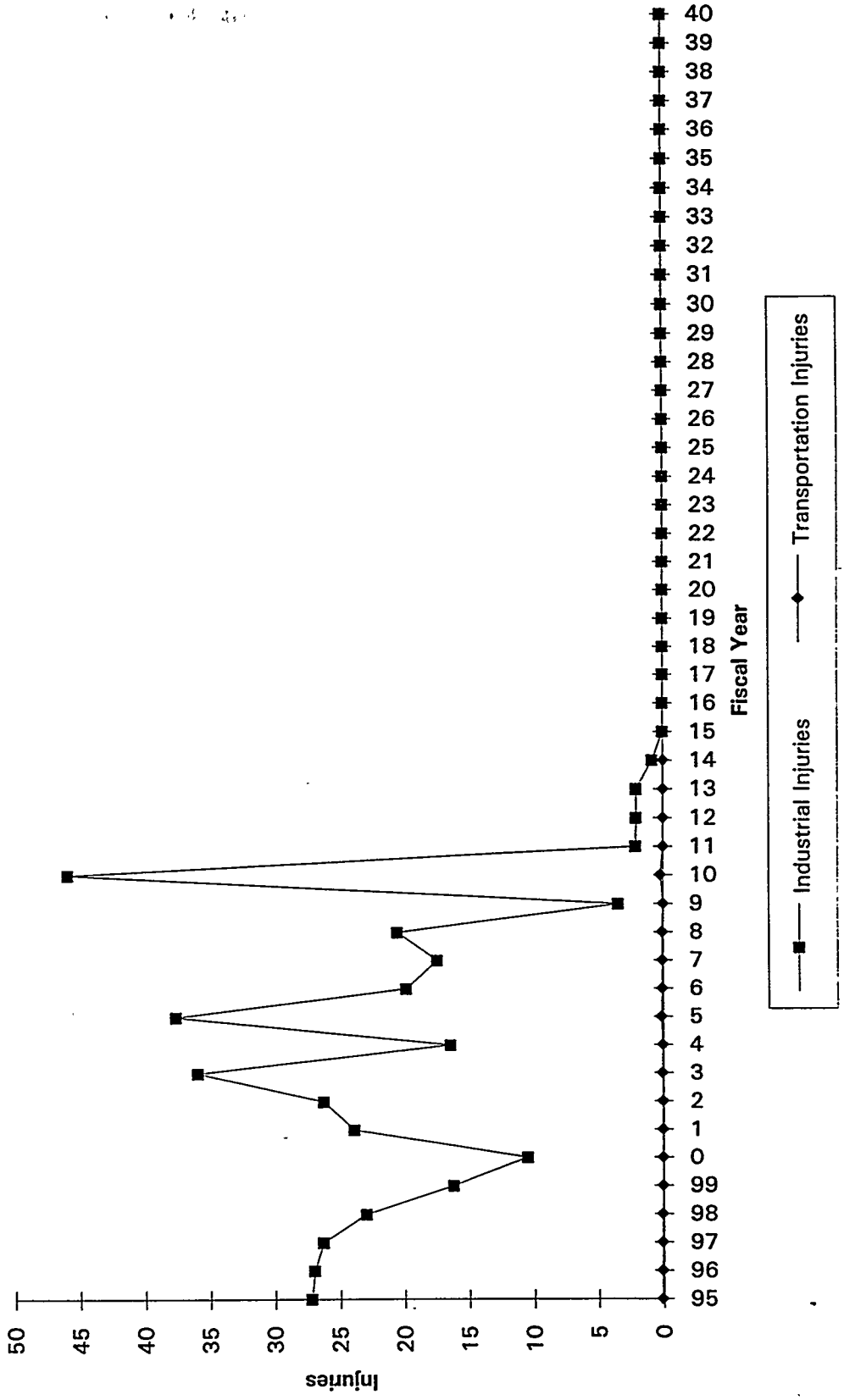

Figure 6-18. Total Injury Risks for the Baseline Alternative.

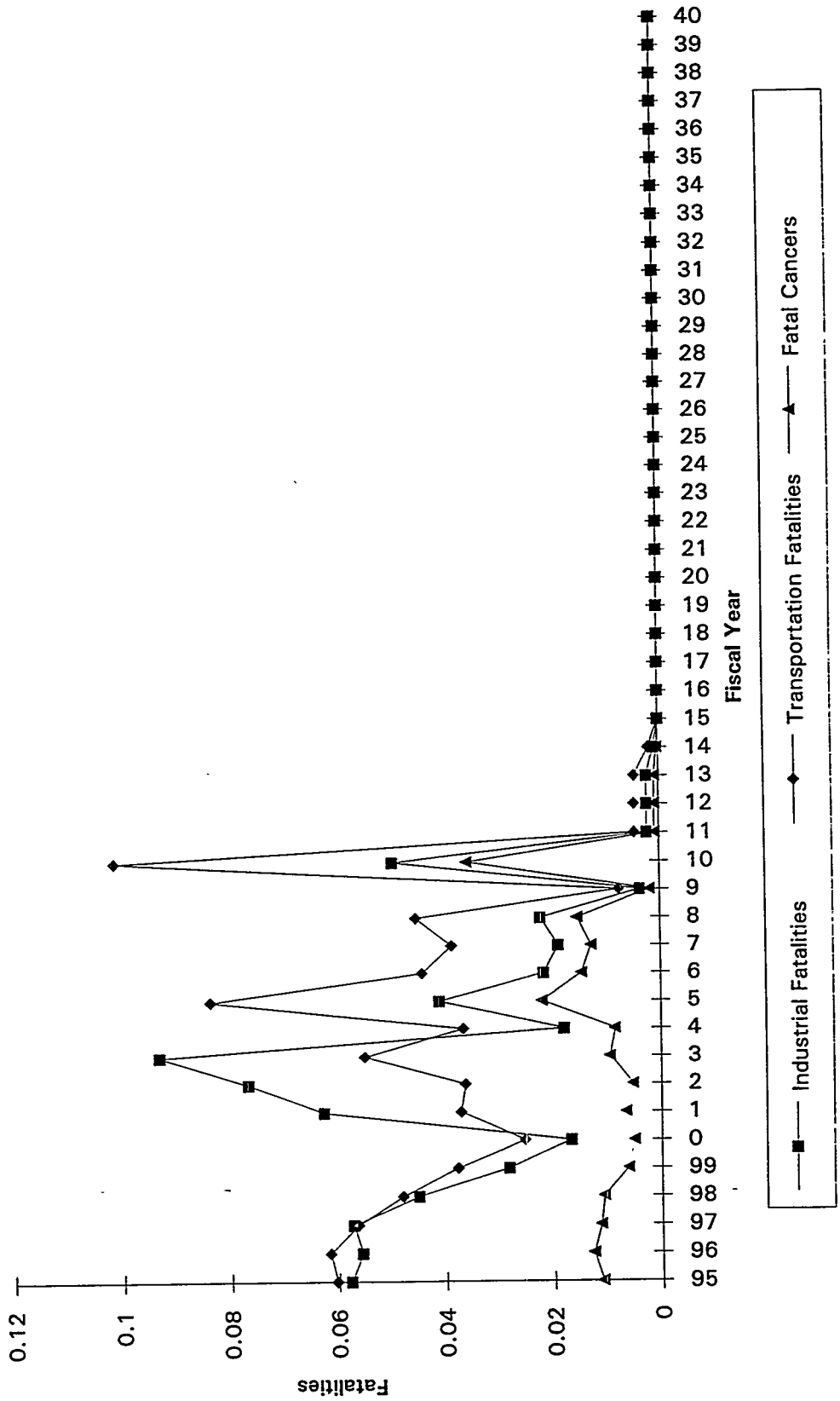

Figure 6-19. Total Fatality Risks for the Baseline Alternative.

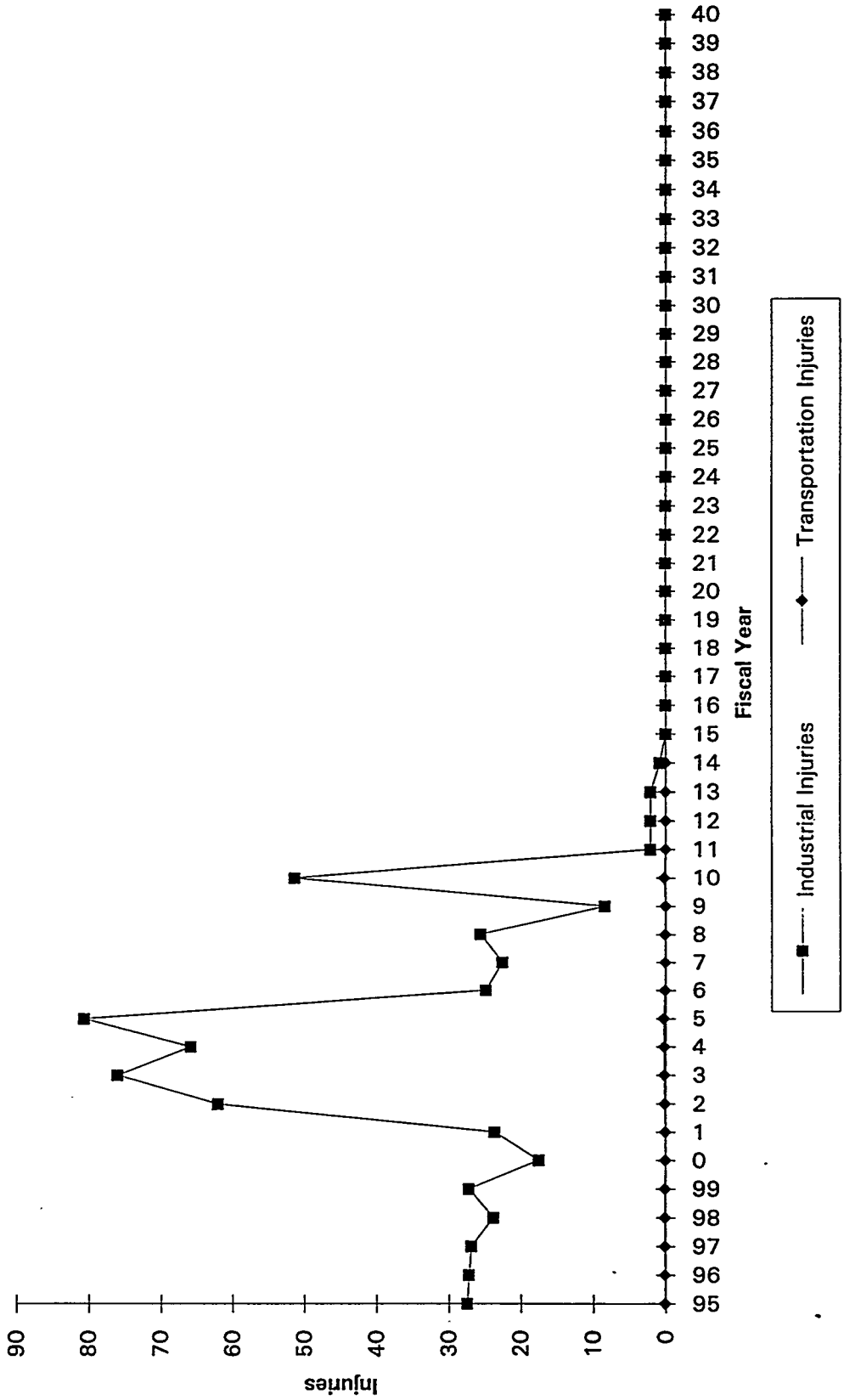

Figure 6-20. Total Injury Risks for Alternative 1.

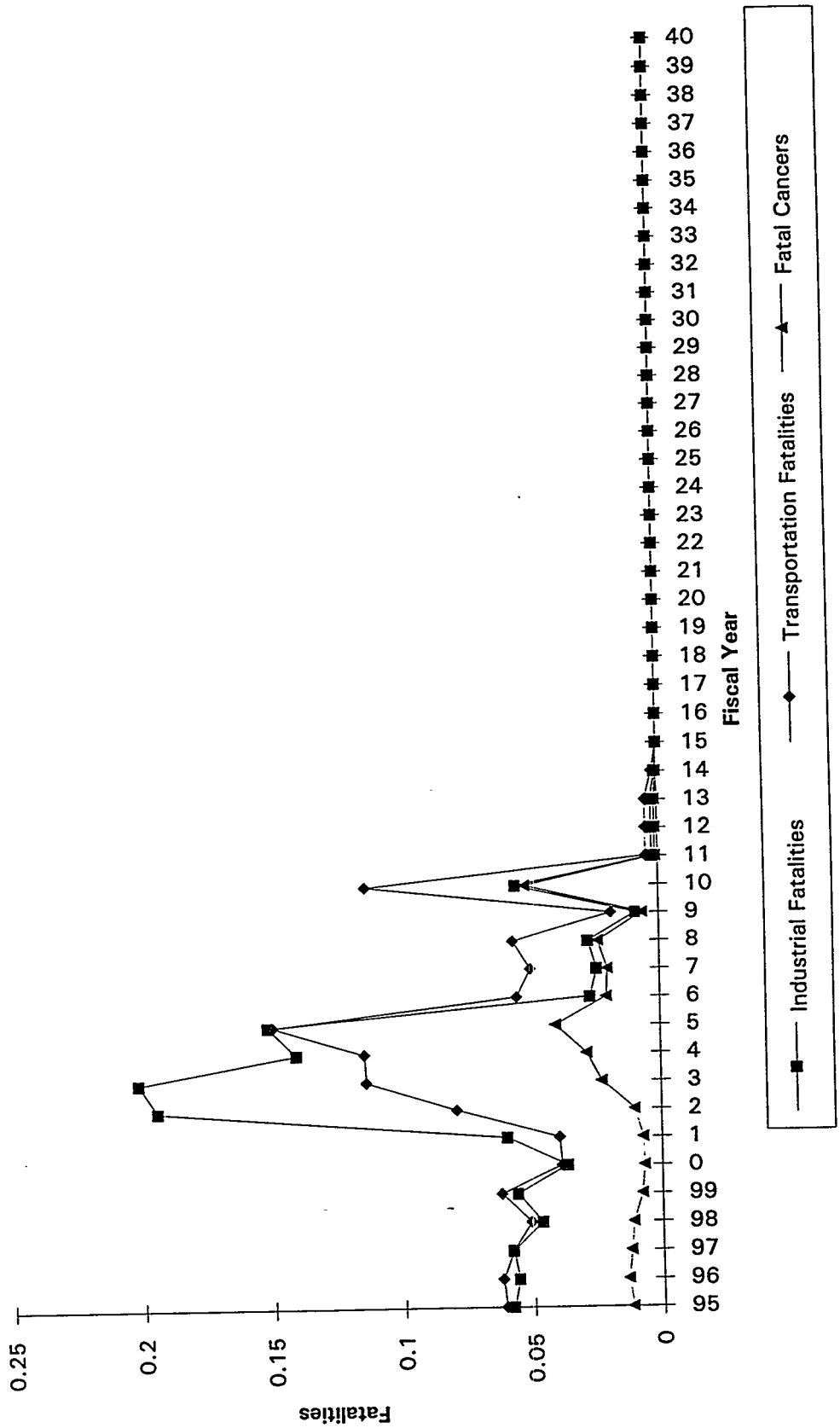

Figure 6-21. Total Fatality Risks for Alternative 1.

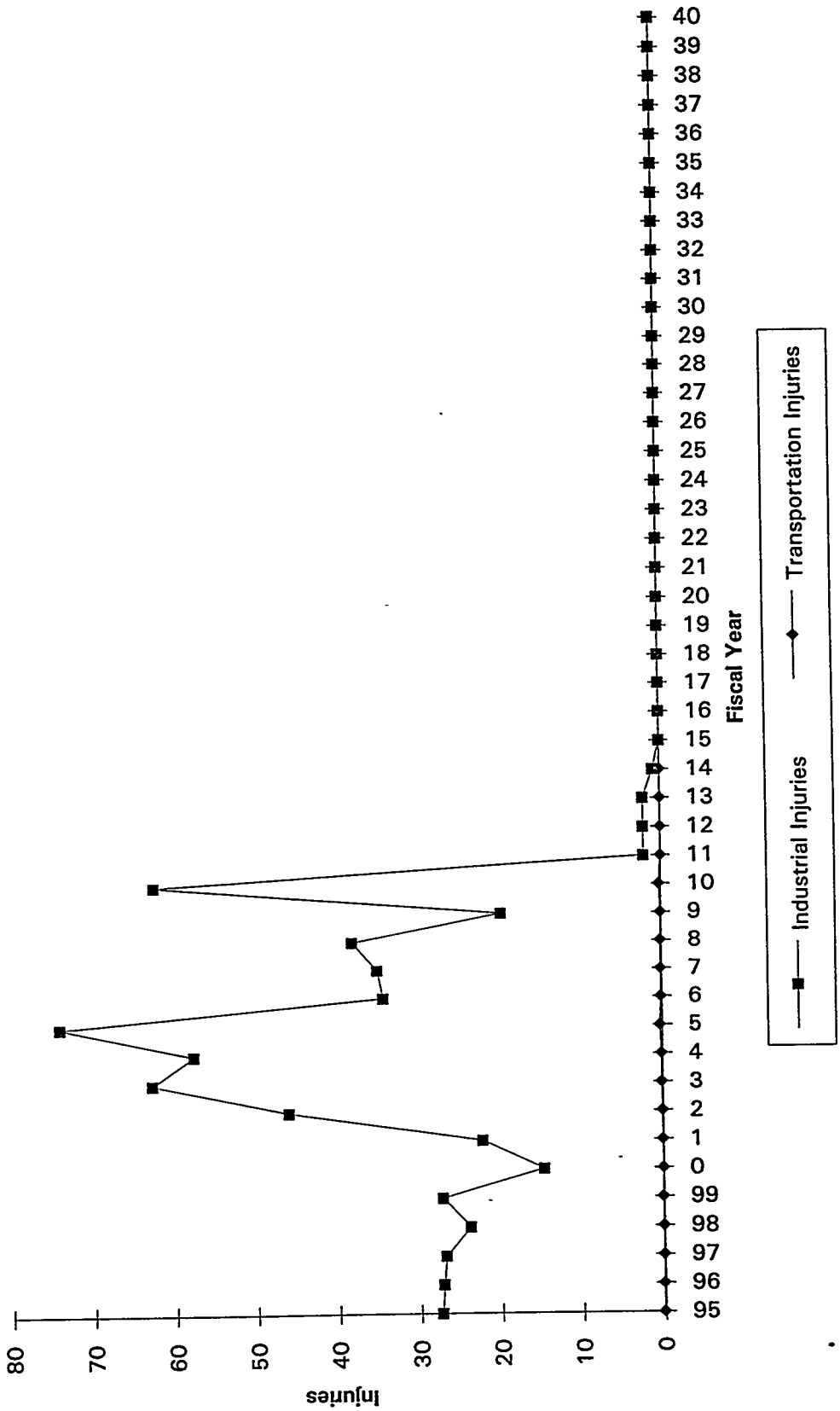

Figure 6-22. Total Injury Risks for Alternative 2.

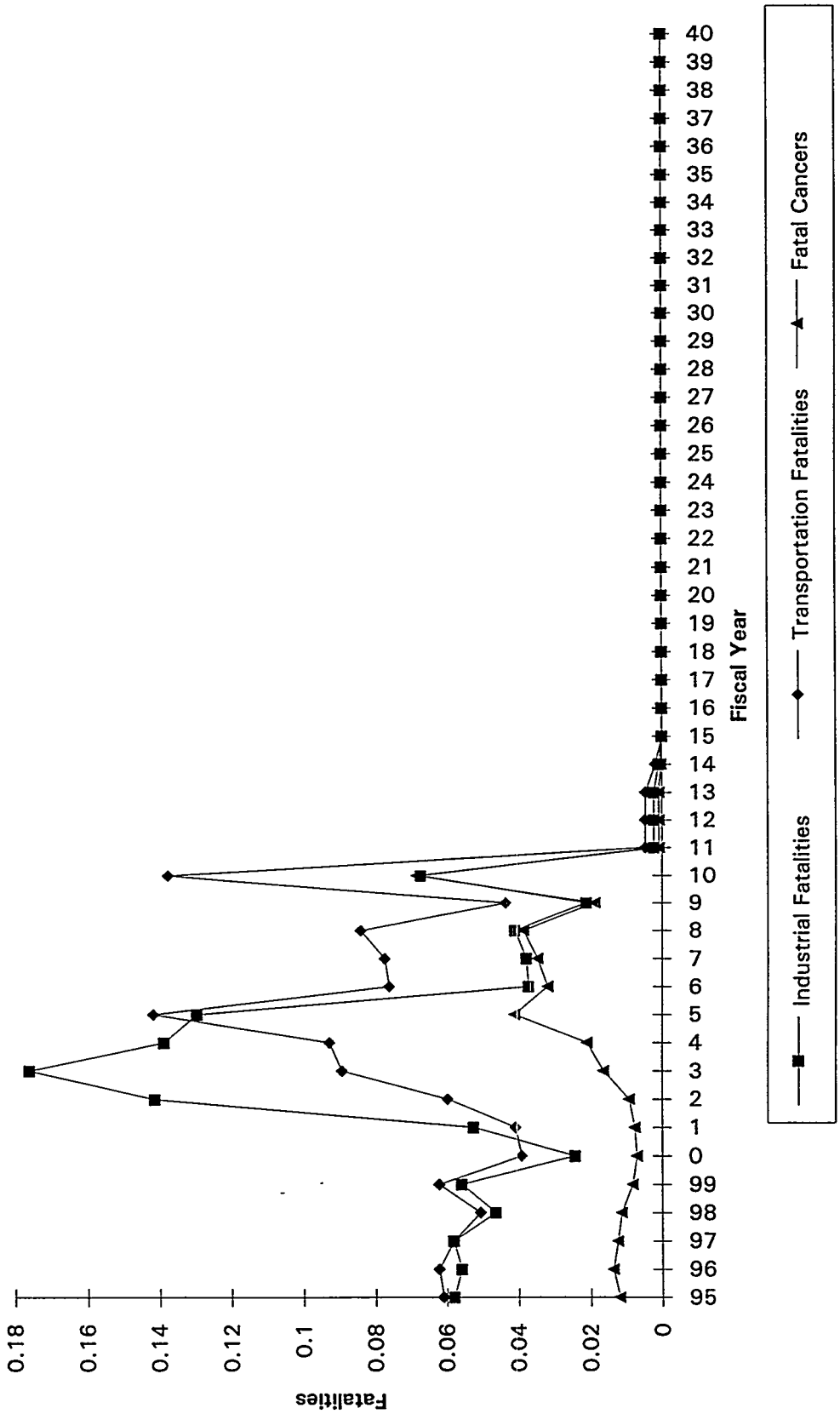

Figure 6-23. Total Fatality Risks for Alternative 2.

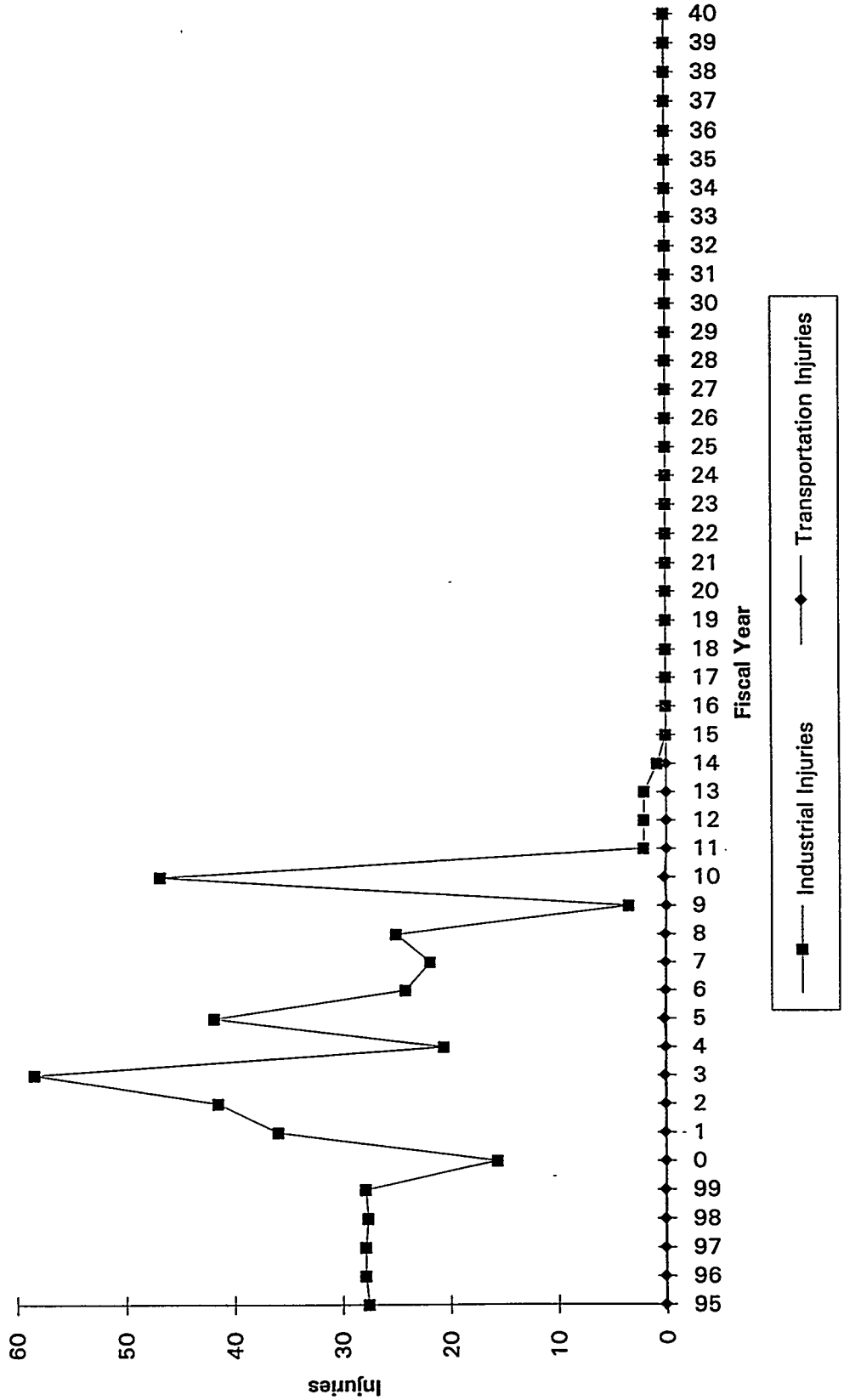

Figure 6-24. Total Injury Risks for Alternative 3.

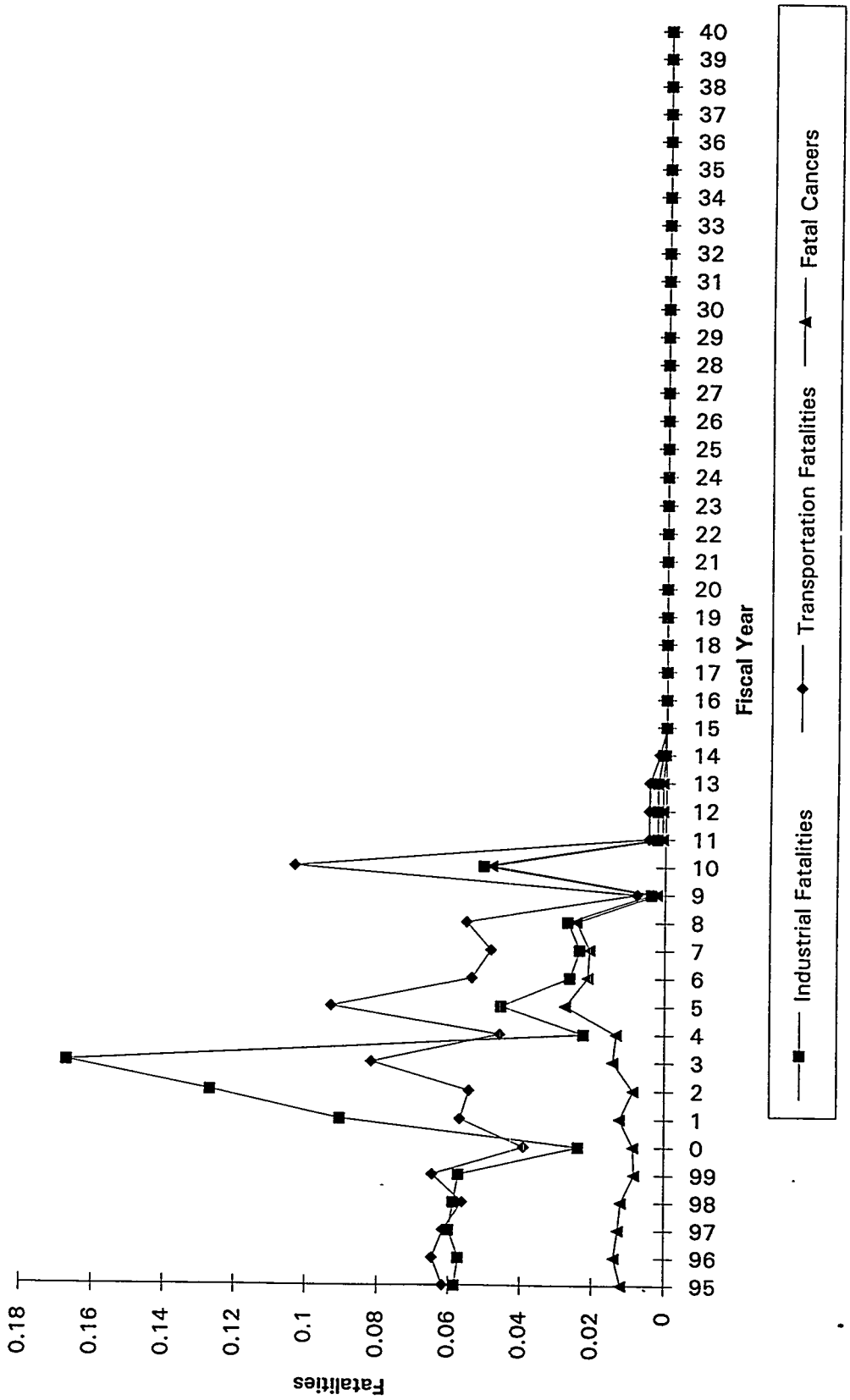

Figure 6-25. Total Fatality Risks for Alternative 3.

TWRS program are a result of the increase of work force size for LLW vitrification and HLW vitrification activities. Retrieval operations contribute to approximately 25% of all worker risks, while Pretreatment operations are considered insignificant due to a shorter operational period and lower worker demand. The LLW melter is classified as a low-level unit in accordance with Section 5.4. and is responsible for 30% of all fatal cancers due to radiological exposures. If dose rates are higher due to concentrating wastes, the fatal cancer rates for LLW vitrification operations could also be higher. Figure 6-14 compares the total industrial and transportation injury risk associated with the TWRS program. The highest two risk periods for industrial risk occur during FY 2002 and FY 2022. The first peak, which climbs from FY 1998 to FY 2002 is due to an increase in workers in all TWRS operations. The second peak at FY 2022 is a direct result of an increase in work force size due to LLW vitrification activities. Essentially, the entire risk of injury is a result of industrial worker risk since transportation risk of injury is relatively low.

Figure 6-15 is a comparison between total industrial, transportation, and cancer fatality risks associated with the TWRS program. This graph contains two distinct peaks for total industrial and transportation fatalities. The first peak begins its climb in FY 1998, and is again a result of an increase in workers for all TWRS operations. The next major increase in fatalities occurs in FY 2022, which is a result of the increase in work force for LLW vitrification activities. Fatalities due to radiological exposures remain relatively low throughout the TWRS program operations.

6.4.1.2 Testing Risks. Evaluation of worker risks for the alternatives revealed the following conclusions which hold true for each of the four testing alternatives: (1) nearly all risks of injury are attributed to industrial activities, (2) all the alternatives have a sharp increase in worker injury and fatality risks at FY 2010 due to the startup of HLW vitrification demonstrations using actual waste at this time, (3) initial worker risks for all the alternatives are due to the startup of retrieval and pretreatment testing during FY 1996 and FY 1999, (4) retrieval testing has the least worker risks due to shorter operational periods and lower worker demands, and (5) transportation risks of injury are insignificant since they remain relatively low throughout the testing period.

Figures 6-16 and 6-17 compare overall injury and fatality risks for retrieval, pretreatment, LLW vitrification, and HLW vitrification operations. Both figures indicate lower overall risk of injuries and fatalities for the Baseline Alternative. The highest risk of injury and fatality is a result of HLW vitrification testing for Alternative 2. Individual results for each of the four alternatives are provided in the following sections.

6.4.1.2.1 Baseline Alternative (Alternative 4). Table 6-15 shows that pretreatment testing is the largest overall contributor to injuries and fatalities for the Baseline Alternative. Combined, LLW vitrification and HLW vitrification testing are accountable for approximately 60% of all injuries and fatalities. A comparison between industrial and transportation injury risk for the Baseline Alternative is presented in Figure 6-18. Figure 6-19 compares total fatality risks for industrial, transportation, and fatal cancers due to activities associated with Baseline Alternative testing. Evaluation of both figures indicates the occurrence of two significant increases in risks at FY 2003 and FY 2005. The initial

peak is a result of an increase in work force size for LLW vitrification testing, and the second is the result of an increase in work force size and LLW vitrification testing.

6.4.1.2.2 Alternative 1. Table 6-16 shows an even overall distribution of total worker injury and fatality risks for Alternative 1 testing activities. All worker risks remain relatively even, the only significant difference is a high fatal cancer risk due to HLW vitrification testing. Figures 6-20 and 6-21 compare total injury and fatality risks for Alternative 1. Two peaks occur at FY 2003 and FY 2005 in each figure; the first is a result of an overall increase in workers, and the second peak is a direct result of an increase in LLW vitrification activities.

6.4.1.2.3 Alternative 2. Table 6-17 summarizes all total worker risks for retrieval, pretreatment, LLW vitrification and HLW vitrification testing. Nearly 40% of all the worker risks for injuries and fatalities can be attributed to HLW vitrification testing. Pretreatment and LLW vitrification testing account for nearly 50% of all risks associated with injuries and fatalities. The highest worker injury risk period for Alternative 2, as shown in Figure 6-22, occurs during FY 2005. This risk is attributed to pretreatment and LLW vitrification testing. Figure 6-23 shows two separate significant increases in worker fatality risks. The peaks occur in FY 2003 and 2005, and represent industrial and transportation fatalities caused by increases in work force size due to pretreatment, LLW vitrification, and LLW vitrification testing.

6.4.1.2.4 Alternative 3. Table 6-18 summarizes all total worker risks for retrieval, pretreatment, LLW vitrification, and HLW vitrification testing for Alternative 3. The HLW vitrification testing accounts for over 40% of the overall worker risks for injuries and fatalities. Figure 6-24 shows a significant increase in worker injury risk occurring in FY 2003 caused by an increase in LLW vitrification and HLW vitrification worker force size. The highest worker industrial, transportation, and cancer fatality risk is also found in FY 2003, as shown in Figure 6-25. This increase in worker risk is a result of LLW vitrification and HLW vitrification testing.

6.4.2 Public Health Risks

Incremental public health risks resulting from new tank leakage were computed using the methodology described in Section 4.6. Incremental risks for one, two, and five new leaking tanks are shown in Table 6-19. Column A in this table identifies the number of new leaks divided by the rate of new leaks per tank farm per year (0.17). These results are plotted as a function of time in Figure 6-26. This figure shows that carcinogenic risks and HI are essentially linear with time. Thus, each one-year delay in retrieving waste from the average tank farm will add 8×10^{-7} to the cancer risk and 0.005 to the HI. The additional environmental risks due to new leakage between the present and the midpoint of the TWRS baseline sluicing period (year 2011) can be inferred from this figure; i.e., a carcinogenic risk of 1.3×10^{-5} and an HI of 0.08.

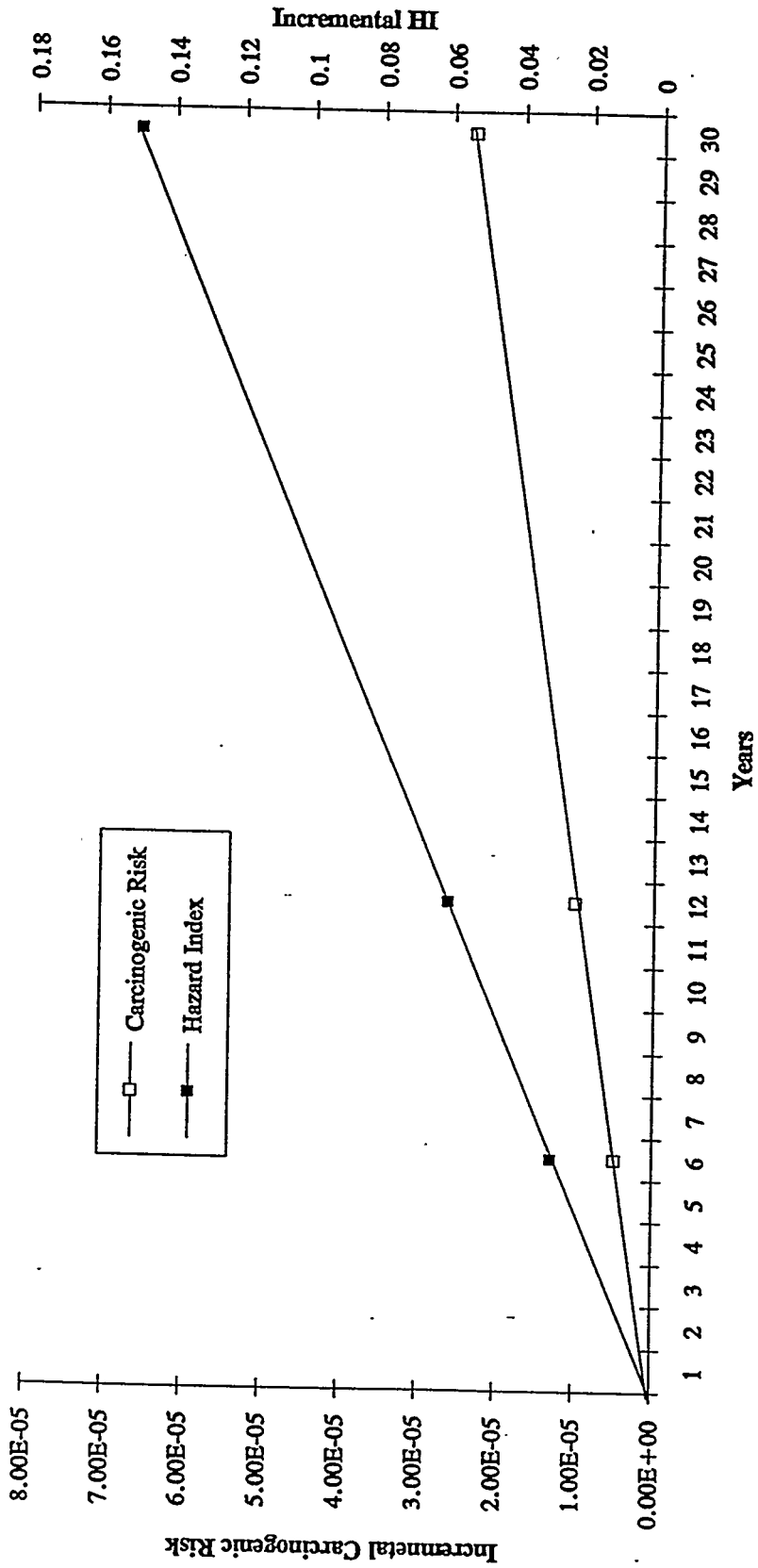

Figure 6-26. Carcinogenic Risks and HI Resulting From Leakage Versus Time.

Table 6-19. Incremental Risks of New SST Leakage.

Number of new Leaking Tanks	A. Corresponding Passage of Time (yr)	B. Carcinogenic Risk	C. Hazard Index (HI)
1	6	4.8×10^{-6}	0.029
2	12	1.0×10^{-5}	0.059
5	30	2.4×10^{-5}	0.15

The overall public health risk of TWRS retrieval is required to assess the relative importance of the risks caused by new leakage. For example, it is important to know if the leakage would cause exceedance of the 10^{-4} carcinogenic risk threshold or the HI threshold of 1. Overall public health risk of the TWRS retrieval case was based on a similar case evaluated by WHC (1995) that used the same hypothetical tank farm defined for this analysis. WHC (1995) evaluated overall risks that would result from releases of COCs in residual waste in the tanks following sluicing, between the tank steel and concrete, within the concrete, and within the soil due to past and new tank leakage. The WHC (1995) report analyzed leakage from two newly leaking tanks in the hypothetical tank farm. The delay associated with two newly leaking tanks would correspond to a sluicing period midpoint during the year 2010, which is essentially the same as the year 2011 midpoint selected for this analysis. Thus, the overall release risk estimated by WHC (1995) approximates risk represented by the TWRS baseline schedule (Alternatives 1a, 2a, 3a, and Baseline Alternative). The WHC (1995) report evaluated several sensitivity cases; results from the solubility-controlled release case were selected to represent TWRS baseline risks.

The testing associated with Alternative 1, 2, and 3 that must be performed prior to design completion will result in a delay in the retrieval schedule. This delay is 9, 12, and 2 years for Alternatives 1, 2, and 3, respectively. Because additional tanks can be expected to develop leaks during this delay period, there are incremental risks above the baseline risk level associated with this testing. These incremental risks, which are associated with added time to ensure design optimization, and were combined with public health risks associated with delays due to schedule risks and the overall TWRS baseline risk, yield delayed-case overall risks. The overall risks for the baseline schedule and delayed retrieval cases are shown in Table 6-20. This table shows that the impacts of new tank leakage on risk may be relatively small, even if the TWRS baseline retrieval schedule is delayed.

Table 6-20. Incremental and Overall Public Health Risks Associated With Tank Waste Retrieval.

Alternative	Carcinogenic Risk				HI			
	TWRS Baseline Risk	Incremental Design Optimization Impacts	Incremental Schedule-Risk Impacts	Overall	TWRS Baseline HI	Incremental Design Optimization Impacts	Incremental Schedule-Risk Impacts	Overall
TWRS Baseline Schedule (Alt. 1a, 2a, 3a and 4)	4.1 E-5	0	1.1 E-6	4.2 E-5	0.24	0	0.007	0.25
9-Year Retrieval Delay (Alt. 1b)	4.1 E-5	7.2 E-6	8.9 E-7	4.9 E-5	0.24	0.045	0.005	0.29
12-Year Retrieval Delay (Alt. 2b)	4.1 E-5	9.6 E-6	9.8 E-7	5.2 E-5	0.24	0.060	0.006	0.31
2-Year Retrieval Delay (Alt. 3b)	4.1 E-5	1.6 E-6	9.8 E-7	4.4 E-5	0.24	0.010	0.006	0.27

This page intentionally left blank.

7.0 COST BENEFIT ANALYSIS AND CONCLUSIONS

In this section the results of the cost benefit analysis are presented and conclusions are drawn. A sensitivity analysis was also performed to assess the significance of the cost benefit differences between the four testing alternatives.

7.1 COST BENEFIT ANALYSIS

The cost benefit of the four alternatives and their variations is shown in Table 7-1. Elements of Table 7-1 are defined in Table 7-2. In general, the approach for assessing the cost benefit for each alternative was as follows.

- For each of the four risk categories (schedule, process worker mishap, and public health), the baseline risks for the complete TWRS program including testing, the risks associated with a schedule delay if needed to allow time for a coordinated testing schedule, and the risks associated with schedule extension resulting from a technology failure were summarized.

- For each of the four risk categories, the lowest risk alternative was divided by each of the other alternatives to give a relative risk benefit.

- For each of the four risk categories, the relative risk benefits were multiplied by a weighting factor. This factor provides the capability to weight the four risk categories differently. For example, public health risks could be weighted higher than worker risks.

- The weighted relative risk benefits were summed for each of the four risk categories.

- The cumulative relative risk benefits were divided by the total TWRS program costs including those associated with schedule delays and extensions.

- The cost benefit for each alternative was divided by the alternative with the highest cost benefit.

As described above, the cost benefit analysis presented in Table 7-1 includes all of the costs and risks associated with the entire TWRS program. Table 7-3 presents a cost benefit analysis in which only the schedule risks are considered.

The overall results of the cost benefit analyses are summarized in Table 7-4. The cost benefits that account for only schedule risk are lower than those for when the total program risks are accounted for because the human health and process mishap risks tend to vary little across the alternatives. In both cases, however, the Baseline Alternative is the most cost-effective alternative.

Table 7-1. Summary of All Risks, Costs, and Cost Benefit Based on Overall TWRS Program.

Summary of Risks, Costs, and Cost/Benefit Based on Overall TWRS Program		Alternative 1		Alternative 2		Alternative 3		Alternative 4
		Large Scale Functional		Small Scale Integrated		Small Scale Functional		Baseline
		a	b	a	b	a	b	
RISKS/COSTS		TPA	Optimum	TPA	Optimum	TPA	Optimum	TPA
SCHEDULE RISKS (years)	1. TPA Operations Completion	24	24	24	24	24	24	24
	2. Testing/Design Optimization Schedule Delay	0	7.4	0	8.4	0	5.4	0
	3. Technology Risk Schedule Extension	1.39	1.11	1.39	1.22	1.39	1.23	1.39
	4. SUBTOTAL (lines 1+2+3)	25.39	32.51	25.39	33.62	25.39	30.63	25.39
	5. SUBTOTAL SCHEDULE RELATIVE RISK BENEFITS	1.00	0.78	1.00	0.76	1.00	0.83	1.00
	6. Weighting Factor	1	1	1	1	1	1	1
	7. WEIGHTED SCHEDULE RELATIVE RISK BENEFITS	1.00	0.78	1.00	0.76	1.00	0.83	1.00
WORKER RISKS (fatalities)	8. Industrial Baseline Risks	14.66	14.66	14.6	14.6	14.36	14.36	14.13
	9. Testing/Design Optimization Increment	0	1.09	0	1.24	0	0.8	0
	10. Schedule Risk Increment	0.65	0.48	0.65	0.56	0.65	0.56	0.65
	11. SUBTOTAL (lines 8+9+10)	15.31	16.23	15.25	16.40	15.01	15.72	14.78
	12. Relative Risk Benefit	0.97	0.91	0.97	0.90	0.98	0.94	1.00
	13. Weighting Factor	1	1	1	1	1	1	1
	14. Weighted Risk Benefit	0.965	0.911	0.969	0.901	0.985	0.940	1.000
	15. Radiation-Induced Risks	4.38	4.38	4 44	4.44	4.34	4.34	4.27
	16 Testing/Design Optimization Increment	0	0.77	0	0.87	0	0.56	0
	17. Schedule Risk Increment	0 3	0.22	0 3	0.26	0.3	0.26	0.3
	18 SUBTOTAL (lines 15+16+17)	4.68	5 37	4.74	5.57	4.64	5.16	4.57
	19 Relative Risk Benefit	0.98	0.85	0 96	0.82	0.98	0.89	1.00
	20. Weighting Factor	10	10	10	10	10	10	10
	21. Weighted Risk Benefit	9.765	8.510	9 641	8.205	9.849	8.857	10.000
	22 Transportation Risks	12.03	12.03	12.08	12.08	11.85	11.85	11.68
	23. Testing/Design Optimization Increment	0	1.43	0	1.62	0	1.05	0
	24 Schedule Risk Increment	0.51	0.37	0.51	0.44	0.51	0.44	0.51
	25. SUBTOTAL (lines 22+23+24)	12.54	13.83	12.59	14.14	12.36	13.34	12.19
	26. Relative Risk Benefit	0 97	0.88	0.97	0.86	0.99	0.91	1.00
	27 Weighting Factor	0.1	0.1	0.1	0.1	0.1	0.1	0.1
	28. Weighted Risk Benefit	0.097	0.088	0.097	0.086	0.099	0.091	0.100
	29. OVERALL SUBTOTAL (lines 14+21+28)	10.828	9.509	10 707	9.192	10.932	9.888	11.100
	30. SUBTOTAL FATALITY RELATIVE RISK BENEFITS	0.98	0.86	0.96	0.83	0.98	0.89	1.00
	31. Weighting Factor	1	1	1	1	1	1	1
	32. WEIGHTED FATALITY RELATIVE RISK BENEFITS	0.975	0.857	0.965	0.828	0.985	0.891	1.000
PUBLIC HEALTH RISKS (MEI fatal cancer risk)	33 Baseline Risks	4.1E-05	4.1E-05	4 1E-05	4.1E-05	4.1E-05	4.1E-05	4.1E-05
	34 Testing/Design Optimization Increment	0.0E+00	7.2E-06	0 0E+00	9.6E-06	0.0E+00	1.6E-06	0.0E+00
	35. Schedule Risk Increment	1.1E-06	8.9E-07	1.1E-06	9.8E-07	1.1E-06	9.8E-07	1.1E-06
	36. SUBTOTAL (lines 33+34+35)	4.2E-05	4.9E-05	4.2E-05	5.2E-05	4.2E-05	4.4E-05	4.2E-05
	37. SUBTOTAL RELATIVE PUBLIC RISK BENEFITS	1.00	0.86	1.00	0.82	1.00	0.97	1.00
	38. Weighting Factor	1	1	1	1	1	1	1
	39. WEIGHTED RELATIVE PUBLIC RISK BENEFITS	1.000	0.858	1 000	0.817	1.000	0.966	1.000
PROCESS MISHAP RISKS (PPG score)	40. Testing	55.9	55.9	47.2	47.2	43.4	43.4	42 9
	41. Retrieval	7.8	7.8	7.8	7.8	7.8	7.8	7.8
	42 Pretreatment	4.5	4.5	4.5	4.5	4.5	4.5	4 5
	43. LLW Vitrification	23.9	23.9	23.9	23.9	23.9	23.9	23.9
	44. HLW Vitrification	25.2	25.2	25 2	25.2	25.2	25.2	25.2
	45 Schedule Risk Increment	3.4	2.7	3.4	3.0	3.4	3.0	3.4
	46. SUBTOTAL (lines 40+41+42+43+44+45)	120.7	120.0	112.0	111.6	108.2	107.8	107.7
	47. SUBTOTAL MISHAP RELATIVE RISK BENEFITS	0.89	0.90	0.96	0.96	1.00	1.00	1.00
	48. Weighting Factor	1	1	1	1	1	1	1
	49. WEIGHTED MISHAP RELATIVE RISK BENEFITS	0.892	0.897	0 962	0.965	0.995	0.999	1.000
	50. SUMMED WEIGHTED RELATIVE RISK BENEFITS (lines 7+32+39+49)	3.868	3.393	3.926	3.365	3.980	3.685	4.000
COSTS (1995 billion $	51 Testing	2.25	2.25	2.40	2.40	1.93	1.93	1.64
	52 Retrieval	4.48	4.48	4.48	4.48	4.48	4.48	4.48
	53. Pretreatment	2.92	2.92	2.92	2.92	2.92	2.92	2.92
	54. LLW Vitrification	6 06	6.06	6.06	6.06	6.06	6.06	6.06
	55. HLW Vitrification	7.44	7.44	7.44	7.44	7.44	7.44	7.44
	56 Testing/Design Optimization Increment	0.00	2.96	0.00	3.36	0.00	2 16	0.00
	57. Schedule Risk Increment	1.34	0.99	1.34	1.14	1.34	1.16	1.34
	58. TOTAL COSTS (lines 51+52+53+54+55+56+57)	24.49	27.10	24.64	27.80	24.17	26.15	23 88
59	COST-BENEFITS (lines 50/58)	0.158	0.125	0.159	0.121	0.165	0.141	0.168
60	RELATIVE COST-BENEFITS	0.94	0.75	0.95	0.72	0.98	0.84	1.00

Table 7-2. Definition of Table 7-1 Elements. (Page 1 of 3)

Line	Risk/Costs	Definition
1.	Tri-Party Agreement Operations Completion	The time in years to complete all TWRS operations and meet the current Tri-Party Agreement milestone.
2.	Testing/Design Optimization Schedule Delay	The assumed time in years the Tri-Party Agreement milestone must be slipped to optimize design input from testing.
3.	Technology Risk Schedule Extension	The projected time in years the Tri-Party Agreement schedule must be extended to accommodate schedule risk.
4.	SUBTOTAL (lines 1+2+3)	The sum of lines 1, 2, and 3.
5.	SUBTOTAL SCHEDULE RELATIVE RISK BENEFITS	The ratio of the lowest value in line 4 to individual line 4 values. This line defines the relative merit or benefit of the adjusted schedules. The shortest schedule rates a score of 1.
6.	Weighting Factor	The multiplier for relating schedule risks to worker risks, public health risks, and industrial mishap risks. Arbitrarily assigned a value of 1.
7.	WEIGHTED SCHEDULE RELATIVE RISK BENEFITS	The product of lines 5 and 6. This product is added to other weighted risk benefits to yield a total risk benefit (line 50).
8.	Industrial Baseline Risks	The number of fatalities projected to result from normal industrial accidents.
9.	Testing/Design Optimization Increment	The projected incremental fatalities from normal industrial accidents that would result from delay of project start-up due to schedule risk related to optimizing testing input for design.
10.	Schedule Risk Increment	The projected incremental fatalities from normal industrial accidents that would result from extension of the project due to schedule risk related to technical inadequacies in TWRS.
11.	SUBTOTAL (lines 8+9+10)	The sum of lines 8, 9, and 10.
12.	Relative Risk Benefit	The ratio of the lowest number of fatalities in line 11 to individual line 11 fatalities.
13.	Weighting Factor	Arbitrarily assigned a value of 1.
14.	Weighted Risk Benefit	The product of lines 12 and 13.
15.	Radiation-Induced Risk	The number of fatalities projected to result from exposure to ionizing radiation.
16.	Testing/Design Optimization Increment	The projected incremental fatalities from exposure to ioning radiation that would result from delay of project start-up due to schedule risk related to optimizing testing input for design.
17.	Schedule Risk Increment	The projected incremental fatalities from exposure to ioning radiation that would result from extension of the project due to schedule risk related to technical inadequacies in TWRS.
18.	SUBTOTAL (lines 15+16+17)	The sum of lines 15, 16, and 17.
19.	Relative Risk Benefit	The ratio of the lowest number of fatalities in line 18 to individual line 18 fatalities.
20.	Weighting Factor	Assigned a value of 10, implying that a radiation-induced fatality is ten times more important to stakeholders than a standard industrial fatality.

Table 7-2. Definition of Table 7-1 Elements. (Page 2 of 3)

Line	Risk/Costs	Definition
21.	Weighted Risk Benefit	The product of lines 19 and 20.
22.	Transportation Risks	The number of fatalities resulting from driving to and from work.
23.	Testing/Design Optimization Increment	The projected incremental transportation fatalities that would result from delay of project start-up due to schedule risk related to optimizing testing input for design.
24.	Schedule Risk Increment	The projected incremental transportation fatalities that would result from extension of the project due to schedule risk related to technical inadequacies in TWRS.
25.	SUBTOTAL (lines 22+23+24)	The sum of lines 22, 23, and 24.
26.	Relative Risk Benefit	The ratio of the lowest number of fatalities in line 25 to individual line 25 fatalities.
27.	Weighting Factor	Assigned a value of 0.1, implying that a vehicular fatality is ten times less important to stakeholders than an industrial fatality.
28.	Weighted Risk Benefit	The product of lines 26 and 27.
29.	OVERALL SUBTOTAL (lines 14+21+28)	The sum of lines 14, 21 and 28.
30.	SUBTOTAL FATALITY RELATIVE RISK BENEFITS	The ratio of the lowest value in line 29 to individual values. This computation normalizes the lowest risk alternative to a score of 1.
31.	Weighting Factor	Arbitrarily assigned a value of 1.
32.	WEIGHTED FATALITY RELATIVE RISK BENEFITS	The product of lines 30 and 31.
33.	Baseline Risks	The projected cancer risk to the maximally exposed individual (MEI) based on the Tri-Party Agreement schedule. The MEI would consume well-water contaminated by residual waste in SSTs that had not been retrieved. Based on the Tri-Party Agreement schedule.
34.	Testing/Design Optimization Increment	The projected incremental cancer risk that would result from delay of project start-up due to schedule risk related to optimizing testing input for design.
35.	Schedule Risk Increment	The projected incremental cancer risk that would result from extension of the project due to schedule risk related to technical inadequacies in TWRS.
36.	SUBTOTAL (lines 33+34+35)	The sum of lines 33, 34 and 35.
37.	SUBTOTAL RELATIVE PUBLIC RISK BENEFITS	The ratio of the lowest risk subtotal in line 36 to each of the line 36 risks.
38.	Weighting Factor	Arbitrarily assigned a value of 1.
39.	WEIGHTED RELATIVE PUBLIC RISK BENEFITS	The product of lines 37 and 38.
40.	Testing	The total priority planning grid (PPG) score for the testing program.
41.	Retrieval	The total PPG score for all TWRS retrieval activities.
42.	Pretreatment	The total PPG score for all TWRS pretreatment activities.
43.	LLW vitrification	The total PPG score for all TWRS LLW vitrification activities.

Table 7-2. Definition of Table 7-1 Elements. (Page 3 of 3)

Line	Risk/Costs	Definition
44.	HLW vitrification	The total PPG score for all TWRS HLW vitrification activities.
45.	Schedule Risk Increment	The projected incremental PPG score increase that would result from extension of the project due to schedule risk related to technical inadequacies in TWRS.
46.	SUBTOTAL (lines 40+41+42+43+44+45)	The sum of lines 40 through 45.
47.	SUBTOTAL MISHAP RELATIVE RISK BENEFITS	The ratio of the lowest value in line 46 to each of the industrial mishap risk values in line 46.
48.	Weighting Factor	Arbitrarily assigned a value of 1.
49.	WEIGHTED MISHAP RELATIVE RISK BENEFITS	The product of lines 47 and 48.
50.	SUMMED WEIGHTED RELATIVE RISK BENEFITS (lines 7+32+39+49)	The sum of lines 7, 32, 39, and 49.
51.	Testing	The total cost of all testing activities.
52.	Retrieval	The total cost of all retrieval activities.
53.	Pretreatment	The total cost of all pretreatment activities.
54.	LLW vitrification	The total cost of all LLW vitrification activities.
55.	HLW vitrification	The total cost of all HLW vitrification activities.
56.	Testing/Design Optimization Increment	The projected incremental costs that would result from delay of project start-up due to schedule risk related to optimizing testing input for design.
57.	Schedule Risk Increment	The projected incremental costs that would result from extension of the project due to schedule risk related to technical inadequacies in TWRS.
58.	TOTAL COSTS (Lines 51+52+53+54+55+56+57)	The sum of lines 51 through 57.
59.	COST BENEFITS (lines 50/58)	Line 50 divided by line 58.
60.	RELATIVE COST BENEFITS	The ratio of the lowest cost-benefit scores in line 59 to each of the cost-benefit scores in line 59.

Table 7-3. Summary of Schedule Risk, Costs, and Cost Benefit.

		Alternative 1		Alternative 2		Alternative 3		Alternative 4
		Large Scale Functional		Small Scale Integrated		Small Scale Functional		Baseline
		a	b	a	b	a	b	
RISKS/COSTS		TPA	Optimum	TPA	Optimum	TPA	Optimum	TPA
SCHEDULE RISKS (years)	1. TPA Operations Completion	24	24	24	24	24	24	24
	2. Design Optimization Schedule Delay	0	7.4	0	8.4	0	5.4	0
	3. Technology Readiness Risk Schedule Extension	1.39	1.11	1.39	1.22	1.39	1.23	1.39
	4. SUBTOTAL (lines 1+2+3)	25.39	32.51	25.39	33.62	25.39	30.63	25.39
	5. SUBTOTAL SCHEDULE RELATIVE RISK BENEFIT	1.00	0.78	1.00	0.76	1.00	0.83	1.00
	6. Weighting Factor	1	1	1	1	1	1	1
	7. WEIGHTED SCHEDULE RELATIVE RISK BENEFIT	1.00	0.78	1.00	0.76	1.00	0.83	1.00
COSTS (1995 billion $	8. Testing	2.25	2.25	2.40	2.40	1.93	1.93	1.64
	9. Retrieval	4.48	4.48	4.48	4.48	4.48	4.48	4.48
	10 Pretreatment	3.30	3.30	3.30	3.30	3.30	3.30	3.30
	11. LLW Vitrification	6.06	6.06	6.06	6.06	6.06	6.06	6.06
	12. HLW Vitrification	7.48	7.48	7.48	7.48	7.48	7.48	7.48
	13. Testing Optimization Delay Increment	0.00	2.96	0.00	3.36	0.00	2.16	0.00
	14. Schedule Risk Increment	0.69	0.55	0.69	0.61	0.69	0.61	0.69
	15. TOTAL COSTS (lines 8+9+10+11+12+13+14)	24.26	27.08	24.41	27.69	23.94	26.02	23.65
16. COST-BENEFITS (lines 7/15)		0.041	0.029	0.041	0.027	0.042	0.032	0.042
17. RELATIVE COST-BENEFITS		0.97	0.68	0.97	0.65	0.99	0.75	1.00

Table 7-4. Cost Benefit Summary.

TESTING ALTERNATIVE	RELATIVE COST BENEFITS	
	Total Program Impacts	Schedule Impacts Only
1a, Large-Scale Functional, Tri-Party Agreement Schedule	0.94	0.97
1b, Large-Scale Functional, Delayed Schedule	0.75	0.68
2a, Small-Scale Integrated, Tri-Party Agreement Schedule	0.95	0.97
2b, Small-Scale Integrated, Delayed Schedule	0.72	0.65
3a, Small-Scale Functional, Tri-Party Agreement Schedule	0.98	0.99
3b. Small-Scale Functional, Delayed Schedule	0.84	0.75
4. Baseline Tri-Party Agreement Schedule	1.00	1.00

The "a" alternatives which are constrained to the current Tri-Party Agreement schedule exhibit cost benefits close to those of the Baseline Alternative because the additional costs and risks associated with them are relatively small on a percentage basis. However, there is no benefit derived from these alternatives because results from pilot-scale testing using actual waste cannot be obtained in time to provide input into the TWRS design under the current Tri-Party Agreement schedule. The one exception to this generalization may be the use of CPU for pilot testing of cesium ion-exchange and filtration at the tanks.

The "b" alternatives allow the TWRS program schedule to slip for a period of years to provide time for completion of the pilot-scale plant testing with actual waste prior to finalization of Title II design. These alternatives provide benefit to the TWRS program in terms of reduced programmatic risks associated with technology failures. The benefit derived from the schedule slippage as presented in Section 6.2 however, doesn't compensate for the additional costs and risks that are incurred by extending operations of the Hanford Site tank farms during the TWRS schedule delay. Thus the net cost benefit as presented in Table 7-4 is less than that from the Baseline Alternative. For the "b" alternatives to be cost-effective, the potential benefit to the TWRS program would have to be greater than was credited in Section 6.2. The following section describes a sensitivity analysis that was performed to assess the degree to which technology schedule risk assumptions would have to be changed to equate the cost benefit results between alternatives.

7.2 SENSITIVITY ANALYSIS

The benefit derived from the pilot-scale testing using actual waste in Alternatives 1b, 2b, and 3b results from a reduction of the risk of a technology failure. This risk is captured in the schedule extension risk. The two variables in the schedule extension risk, consequence and probability, were varied to determine the sensitivity of conclusion.

When interpreting the presented schedule extension it is important to remember that it is expressed as a risk. A risk is a consequence times a probability. The identified consequences to the TWRS program for any technology failure will be severe; requiring an estimated schedule extension of six months to four years to remedy. These consequences however, are multiplied by a probability of technology failure to determine the resulting risk. These probabilities, in general were estimated to be quite low, from 20% to 0.1%.

The probability of a technology failure is a function of two probabilities:

- Probability of a technology failure occurs if no testing is performed beyond the Baseline Alternative

- Probability that pilot-scale testing using actual waste will identify a risk reducing design change.

It was found that the schedule extension risk was fairly insensitive to the equipment replacement time because it varied from 0.5 to 4 years. The primary variable of importance was the probability of technology failure.

Based on the schedules presented in Section 5.2, a small-scale functional pilot plant utilizing existing facilities (Alternative 3) could produce test results sooner than Alternatives 1 or 2. It was found that, based on the cost-benefit methodology used in Section 7.1, Alternative 3 was cost-effective if it could reduce the Baseline Alternative's schedule extension risk by 3.3 years. Alternatives 1 and 2 required 5.7 and 6.3 year reductions in schedule extension risk, respectively to be cost-effective.

In terms of probability, Alternative 3 would be the preferred alternative if the following conditions exist

- The Baseline Alternative had an overall probability of 80% to identify all potential technology failures

- Alternative 3 had a 50% probability of resolving technology failures missed by the Baseline Alternative.

This compares with the probabilities derived in this report of 95% and 10%, respectively. The probability of pilot-scale testing using actual waste resolving technology failures missed by the Baseline Alternative is believed to be fairly low (10% to 20%). This is because technology failures will likely result from chemical and physical variations in the retrieved

wastes. These variations are believed to be so prevalent within the stored wastes that pilot-scale studies using actual waste are not likely to treat enough waste to discover them.

7.3 CONCLUSIONS

The overall conclusion is that the inclusion of pilot-scale testing beyond laboratory- and bench-scale testing using actual waste and simulants contained in the Baseline Alternative is not an effective utilization of money or resources. The primary reasons for this are listed below.

- Pilot-scale testing in new facilities using actual tank waste cannot provide data in time to support the current design schedule.

- Slippage of the schedule to accommodate this testing would extend the required period of operation of the Hanford Site tank farms. The tank waste safety and operations program would continue during this time at a cost of $400 million annually. Delay of SST retrieval would further increase the risk of leaks to the soil and increased public and worker exposure.

- The baseline testing strategy with its combination of laboratory-scale and bench-scale testing using actual and simulated waste, pilot-scale testing using simulants, and full-scale demonstration of selected unit operations adequately addresses the design concerns. This assumes that provisions are made in the pretreatment facility design to incorporate in-facility sludge washing and solid/liquid separation, should it be required.

Little additional information, beyond that to be obtained in the baseline testing, can likely be obtained by pilot-scale testing using actual waste. The Baseline Alternative includes extensive testing with simulated and actual waste at laboratory- and bench-scales. Pilot-scale testing using simulants is also planned for nearly all major process components; therefore, the primary purpose for pilot-scale testing using actual waste would be to identify problems/responses not seen with simulated waste.

The primary difficulty with the use of simulated waste is matching the large variability that is inherent in the stored tank waste. This same variability however, would require the retrieval and pilot-scale testing of relatively large volumes of radioactive waste. This would require a timeframe and operations not much different than full-scale processing.

For these reasons, it is recommended that pilot-scale testing using actual waste not be performed prior to design and construction of the TWRS facilities. The incorporation of a small pilot-scale facility within the full-scale facilities is recommended. This facility would allow for process testing of batches of each retrieved waste type prior to introducing it into the full facility. This is an approach similar to that used for vitrification operations in France.

In summary, it will cost more in terms of budget and additional risk to extent the current schedule to allow for this pilot-testing than could be recovered from the investment. The following specific conclusions can be drawn:

- The Baseline Alternative is the most cost-beneficial (lowest cost and lowest risk in each risk category evaluated - schedule, process mishap, worker, and public health.

- Pilot-scale testing with actual waste and the current Tri-Party Agreement schedule (Alternatives 1a, 2a, and 3a) add cost and offer no risk-reduction benefit, including incremental benefit, due to late delivery of test results. One possible exception to this conclusion may be the cesium CPU element of Alternative 1a.

- Delay of the schedule to complete pilot-scale testing with actual waste (Alternatives 1b, 2b, and 3b) offer incremental benefits associated with reduced technology risks, but overall costs and risks are higher.

- The Baseline Alternative must have a fairly high probability (20%) of a technology failure and the other alternatives must have a high probability (>50%) of identifying technology flaws missed by Baseline Alternative testing to be cost-beneficial.

8.0 REFERENCES

Blanchard, K.A., M.D. Freshley, C.T. Kincaid, B.G Lauzon, M.G. Piepho, K. Rhoads, J.W. Shade, J.A. Voogd, J.H. Westsik, Jr., and G.A. Whyatt, 1993, *Performance Assessment of Grouted Double-Shell Tank Waste Disposal at Hanford*, WHC-SD-WM-EE-004, Rev. 0, Westinghouse Hanford Company, Richland, Washington.

Boomer, K.D., S.K. Baker, A.L. Boldt, J.D. Galbraith, J.S. Garfield, C.E. Goldberg, B.A. Higley, L.J. Johnson, M.J. Kupfer, R.M. Marusich, R.J. Parazin, A.N. Praga, G.W. Reddick, J.A. Reddick, E.J. Slaathaug, L.M. Swanson, T.L. Waldo, and C.E. Worcester, 1993, *Tank Waste Technical Options*, WHC-EP-0616, Rev. 0, Westinghouse Hanford Company, Richland, Washington.

DOE, 1982, *Environment, Safety,and Health and DOE Facilities*, Annual Report, Calendar Year 1981, DOE/EP-0024/1, U.S. Department of Energy, Washington, D.C.

DOE, 1987, *Disposal of Hanford Defense High-Level, Transuranic and Tank Wastes (HDWEIS)*, DOE/EIS-0113, U.S. Department of Energy, Richland, Washington.

DOE, 1993, *Tank Waste Remediation system Integrated Technology Plan*, DOE/RL-92-61, Draft, U.S. Department of Energy, Richland, Washington.

Droppo, J.G., Jr., J.W. Buck, M.D. Freshley, D.L. Strenge, and J.S. Wilbur, 1991, *Single-Shell Tank Constituent Rankings for Use in Preparing Waste Characterization Plans*, PNL-7572, Battelle-Pacific Northwest Laboratory, Richland, Washington.

Ecology, EPA, and DOE, 1989, *Hanford Federal Facility Agreement and Consent Order*, as amended, Washington State Department of Ecology, U.S. Environmental Protection Agency, and U.S. Department of Energy, Olympia, Washington.

Farish, T.J., 1994, *Experimental Infrastructure and Logistics Required to Support TWRS Technology Development*, Los Alamos National Laboratory, Los Alamos, New Mexico.

Gee, G. et al., 1993, *Field Lysimeter Status Report - FY 93*, PNL-8911, Battelle-Pacific Northwest Laboratory, Richland, Washington.

Hanlon, B.M., 1994, *Waste Tank Summary for the Month Ending December 31, 1994*, WHC-EP-0182-81, Westinghouse Hanford Company, Richland, Washington.

Howden, G.F., 1994, *TWRS Tank Waste Pretreatment and Vitrification Process Development Testing Requirements Assessment*, WHC-SD-WM-TA-156, Westinghouse Hanford Company, Richland, Washington.

Lowe, S.S., 1993, *Engineering Study of Tank Leaks Related to Hydraulic Retrieval of Sludge Waste from Tank 241-C-106*, WHC-SD-WM-ES-218, Rev. 0, Westinghouse Hanford Company, Richland, Washington.

Morrissey, M.F. and L.D. Whitney, 1994, *Low-Level Waste Vitrification Pilot-Scale System Needs Report*, PVTD-C94-22.02D, prepared for the U.S. Department of Energy by Pacific Northwest Laboratory, Richland, Washington.

National Safety Council, 1987, *Accident Facts*, National Safety Council, Chicago , Illinois.

National Safety Council, 1988, *Accident Facts*, National Safety Council, Chicago , Illinois.

National Safety Council, 1989, *Accident Facts*, National Safety Council, Chicago , Illinois.

National Safety Council, 1990, *Accident Facts*, National Safety Council, Chicago , Illinois.

National Safety Council, 1991, *Accident Facts*, National Safety Council, Chicago , Illinois.

NRC, 1990, *Health Effects of Exposure to Low Levels of Ionizing Radiation*, Committee on the Biological Effects of Ionizing Radiation, National Academy of Sciences, National Research Council, Washington, D.C.

Peters, M.S. and K.D. Timmerhaus, 1980, *Plant Design and Economics for Chemical Engineers*, 3rd. ed., McGraw-Hill, New York, New York.

PNL, 1994, *Draft Hanford Tank Waste Remediation Systems (TWRS) Waste Pretreatment Program Test Requirements Strategy and Issues*, TWRSPP-94-096, prepared for Westinghouse Hanford Company by Pacific Northwest Laboratory, Richland, Washington.

Reddick, G.A., 1994, *Testing and Development Strategy for the Tank Waste Remediation System*, WHC-SD-WM-SP-006, Westinghouse Hanford Company, Richland, Washington.

Schramke, J.A., C.S. Glantz, and G.R. Holdren, 1994, *Hanford Site Environmental Setting Data Developed for the Unit Risk Factor Methodology in Support of the Programmatic Environmental Impact Statement (PEIS)*, PNL-9801, Battelle-Pacific Northwest Laboratory, Richland, Washington.

Schultz, W.W., 1978, *Removal of Radionuclides from Hanford Defense Waste Solutions*, RHO-SA-51, Rockwell Hanford Operations, Richland, Washington.

Weiss, R.L., 1986, *TY Tank Farm Waste Characterization Plan*, RHO-WM-TI-IP, Rockwell Hanford Operations, Richland, Washington.

Weiss, R.L. and K.E. Schull, 1988a, *Data Transmittal Package for 241-A-103 Waste Tank Characterization*, SD-RE-TI-198, Westinghouse Hanford Company, Richland, Washington.

Weiss, R.L. and K.E. Schull, 1988b, *Data Transmittal Package for 241-C-104 Waste Tank Characterization*, SD-RE-TI-199, Westinghouse Hanford Company, Richland, Washington.

Weiss, R.L. and K.E. Schull, 1988c, *Data Transmittal Package for 241-A-106 Waste Tank Characterization*, SD-RE-TI-200, Westinghouse Hanford Company, Richland, Washington.

Weiss, R.L. and K.E. Schull, 1988d, *Data Transmittal Package for 241-A-102 Waste Tank Characterization*, SD-RE-TI-201, Westinghouse Hanford Company, Richland, Washington.

Weiss, R.L. and K.E. Schull, 1988e, *Data Transmittal Package for 241-BX-105 Waste Tank Characterization*, SD-RE-TI-202, Westinghouse Hanford Company, Richland, Washington.

Weiss, R.L. and K.E. Schull, 1988f, *Data Transmittal Package for 241-C-103 Waste Tank Characterization*, SD-RE-TI-203, Westinghouse Hanford Company, Richland, Washington.

Weiss, R.L. and K.E. Schull, 1988g, *Data Transmittal Package for 241-C-105 Waste Tank Characterization*, SD-RE-TI-204, Westinghouse Hanford Company, Richland, Washington.

Weiss, R.L. and K.E. Schull, 1988h, *Data Transmittal Package for 241-C-106 Waste Tank Characterization*, SD-RE-TI-205, Westinghouse Hanford Company, Richland, Washington.

Weiss, R.L. and K.E. Schull, 1988i, *Data Transmittal Package for 241-BX-104 Waste Tank Characterization*, SD-RE-TI-206, Westinghouse Hanford Company, Richland, Washington.

WHC, 1993, *Corrective Action Management Manual*, WHC-CM-1-4, Westinghouse Hanford Company, Richland, Washington.

WHC, 1994, *Risk-Based Systems Analysis of Emerging High-Level Waste Tank Remediation Technologies*, WHC-EP-0782, Westinghouse Hanford Company, Richland, Washington.

WHC, 1995, *Feasibility Study of Tank Leakage Mitigation Using Subsurface Barriers*, WHC-SD-WM-ES-300, Westinghouse Hanford Company, Richland, Washington.

This page intentionally left blank.

APPENDIX A

MODULE DESCRIPTION FLOW SHEETS AND DATA SHEETS

This page intentionally left blank.

This appendix presents the module description flow sheets and data sheets. These sheets are organized according to the unit operations developed for this report and were required to perform the process accident and nonroutine maintenance mishap risk assessment. Information for the process descriptions of the unit operations has been taken from the *Tank Waste Technical Options Report* (Boomer et al. 1993)[1]. Each unit operation has been described in the following categories:

- General description
- Number of individual components (tanks, pumps, filters, etc.)
- Size/capacity of each component (m, m^2, m^3)
- Unit operation lifetime (years)
- Operating efficiency (%)
- Radiation level (high, low, cold)
- Total direct labor manhours (hours)
- Temperature (°C)
- Pressure (psi)
- pH/acidity/alkalinity
- Energetic reaction potential (seven categories from very low to very high)
- Process stability (high, medium, low)
- Waste form (solid, liquid, gas)
- Solids in waste (%)
- Organics in waste (%)
- Flammability (seven categories from very low to very high)
- Number of [high-level (HL) assumed to require remote handling), low-level (LL) assumed to allow contact handling, and cold] mechanized parts per unit
- Number of (HL, LL and cold) isolated process steps per unit
- Number of installation activities (e.g., install 20 mixer pumps)
- Number of items requiring decontamination
- Number of items requiring decommissioning and disposal

[1] Boomer, K.D., S.K. Baker, A.L. Boldt, J.D. Galbraith, J.S. Garfield, C.E. Goldberg, B.A. Higley, L.J. Johnson, M.J. Kupfer, R.M. Marusich, R.J. Parazin, A.N. Praga, G.W. Reddick, J.A. Reddick, E.J. Slaathaug, L.M. Swanson, T.L. Waldo, and C.E. Worcester, 1993, *Tank Waste Technical Options*, WHC-EP-0616, Rev. 0, Westinghouse Hanford Company, Richland, Washington.

This page intentionally left blank.

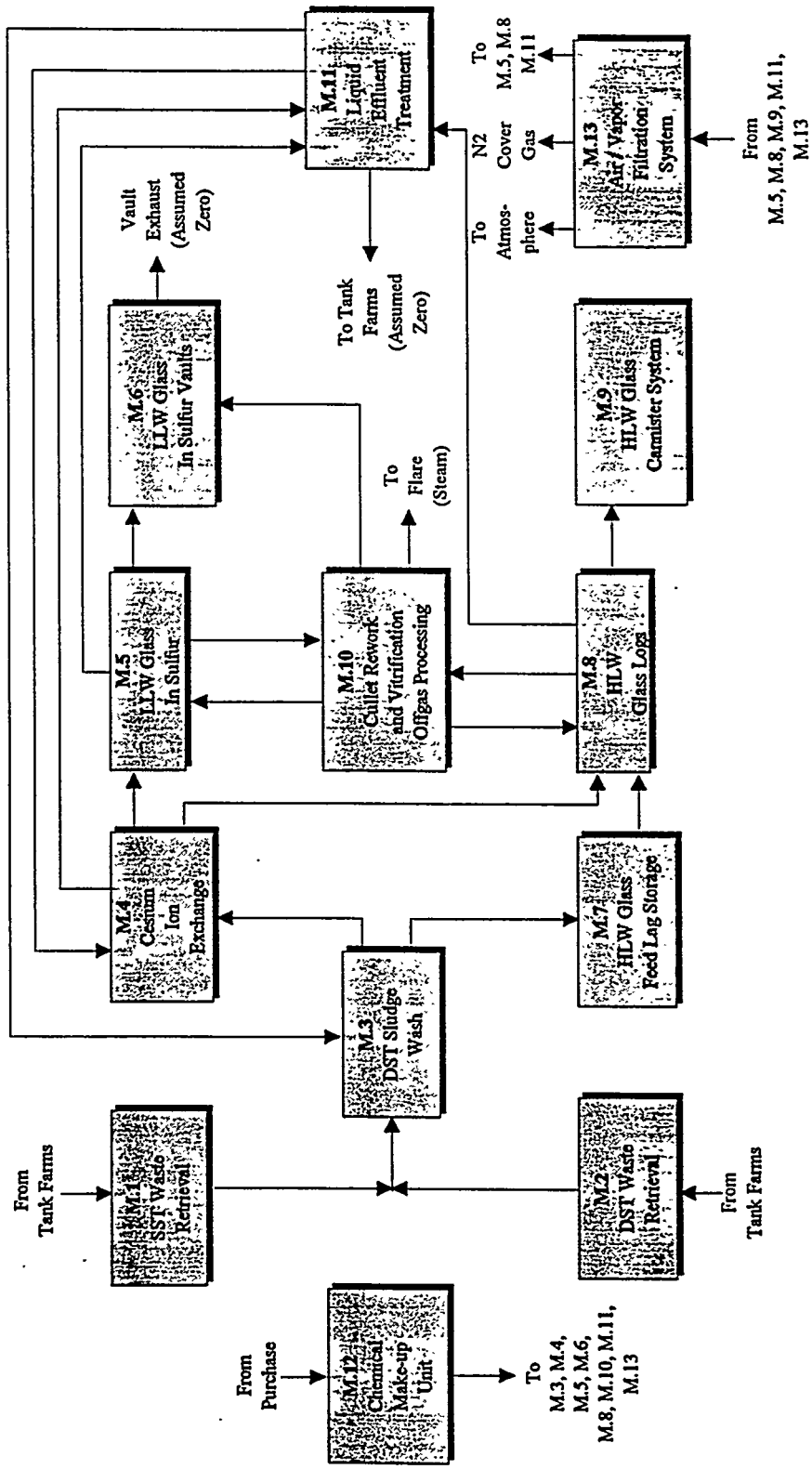

TWRS Process Diagram.

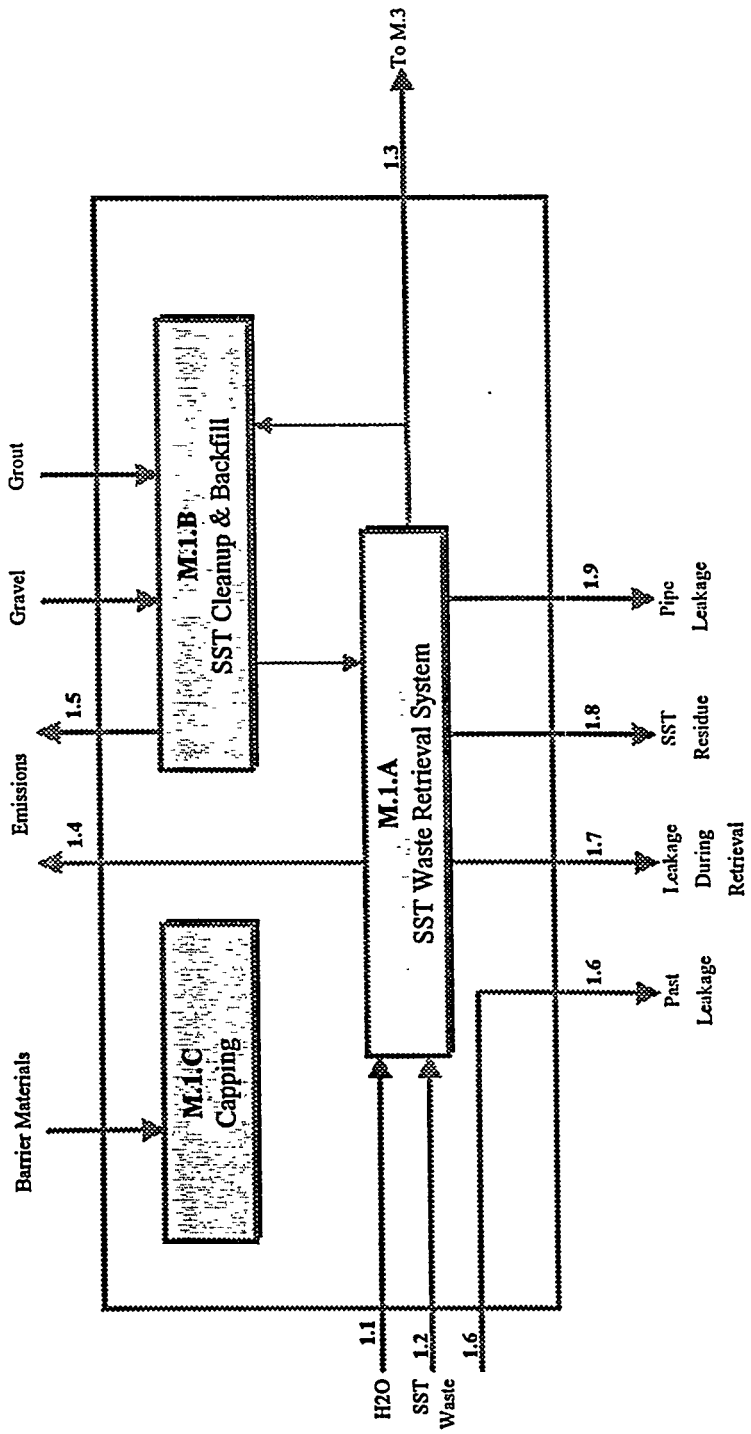

SST Waste Retrieval Flow Sheet.

Module: Base Case M.1, SST Waste Retrieval
Component / Unit Operation: M.1.A, SST Waste Retrieval System

General Description: High-level waste is contained in 149 SSTs. The typical tank contains about 40 wt% sludge and 60 wt% saltcake (Boomer 1993). The average mass of waste in each tank is about 1,500 metric tonnes (Boomer 1993). Each tank is assumed to require installation of onenew pump and one new mixer-sluicer. It is estimated that ___ of the tanks will require installation of ___ new sluice/pump pits. Recycled water is added to the tanks via the sluicer to dissolve and/or entrain tank waste, which is pumped from the tank. I is assumed that 9.6 miles of new 6: encased buried piping and associated equipment is installed to support retrieval operations. Some waste previously leaked from the tanks and more leakage during sluicing is expected to occur. Some leakage from the slurry transfer piping will also occur. Sluicing is assumed to remove 99% of the tank waste contents (Boomer 1993).

Number of Units: 149 SSTs (Boomer 1993)
Unit Size: 55,000 to 1,000,000 gal (Boomer 1993)
Operational Duration (yrs): 37
Operating Efficiency: 70%
Radiation Level: High
Temp: 25 - 90 C, decreasing to 20 C during retrieval (Boomer 1993)
Pressure: tanks, ambient: pumps/sluicers. 150 psi
pH/Acidity/Alkalinity: pH 14, decreasing to pH 8 during retrieval (BEJ)
Energetic Reaction Potential: Low
Process Stability: moderate (some plugging potential exists)
% Solids in Waste: 0.8, decreasing to <1% during sluicing (Boomer 1993)
Waste Form: Slurry
% Organics in Waste: 0.001 (Boomer 1993)
Flammability: Low

Mechanized Parts / Unit
High-level: 2 (1 pump, 1 mixer-sluicer)
Low-level: 0
Cold: 0

Isolated Process Steps / Unit
High-level: 0
Low-level: 0
Cold: 0

Combined Installation Activities: 149 pumps, 149 mixer-sluicers, ___ pits, 12 pipeline systems (one for each tank farm)

Combined Decontamination/ Decommissioning Disposal/Activities
Decontaminations: 0 (See M.1.B and M.1.C)
Decommissioning & Disposal: 0 (See M.1.B and M.1.C)

Module: Base Case M.1, SST Waste Retrieval
Component / Unit Operation: M.1.B, SST Cleanup & Backfill

General Description: Following retrieval of waste, each tank will be partially filled with exhumed SST waste transfer piping, contaminated soil and other associated stable solid waste, resulting from TWRS waste recovery operations. The tank space will then be filled with gravel to the greatest degree practical, followed by injection of grout to completely fill the tank head space. The grout is a pumpable mixture of sand, portland cement, and water. The tank filling action is intended to provide a physically stable base on which to install caps. (M.1.C).

Number of Units: 149 SSTs (Boomer 1993)
Unit Size: 630,000 gal (average)
Operational Duration (yrs): 37
Operating Efficiency: 25%
Radiation Level: High (tanks and pipe)
Temp: ambient
Pressure: ambient
pH/Acidity/Alkalinity: neutral
Energetic Reaction Potential: very low
Process Stability: high
% Solids in Waste: 100%
Waste Form: Solid
% Organics in Waste: 0%
Flammability: very low

Mechanized Parts / Unit
High-level: 0.01 Soil Excavators, 0.03 Trucks, 0.01 Pipe Cutters/Loaders, 0.03 Pipe Waste Unloading Stations
Low-level: 0
Cold: 0.03 Gravel distributors, 0.03 Portable Grout Mixing/Pumping Systems

Isolated Process Steps / Unit
High-level: 545,500 - 0.5 yd soil scoops, 10 pipe cuts, 5.070 pipe waste loadings, 20 truck pipe waste hauls
Low-level: 0
Cold: 0 - 0.5 yd soil scoops, 0 truck soil hauls, 171.000 truck gravel hauls, 3.100 SST gravel loadings. 13,000 concrete truck hauls.

Combined Installation Activities: 149 Pipe Waste Unloading Stations, 1 Gravel Washer/Crusher, 149 Gravel Distributors, 149 Grout Mixer/Pumpers
Combined Decontamination/ Decommissioning Disposal/Activities:
Decontaminations: Soil Excavator (___), Trucks (___), Pipe Cutter/Loaders (___), Gravel Distributors (___)
Decommissioning & Disposal: 2 Soil Excavators, 4 Trucks, 2 Pipe Cutters/Loaders, 4 Pipe Waste Unloading Stations.

Module: Base Case M.1, SST Waste Retrieval
Component / Unit Operation: M.1.C, Capping

General Description: Following retrieval of the waste from the tanks (M.1.A) and stabilization of the tanks (M.1.B), each of the 12 SST tank farms will be capped with a Hanford Protective Barrier. Dimensions of the barrier are assumed to be 415 ft x 530 ft with a minimum thickness of 5.67 ft. The barrier comprises the following materials: silt with pea gravel (29%), compacted silt (29%), filter sand (9%), filter gravel (9%), drainage gravel (9%), asphalt (9%), asphalt base (6%), and grading fill (variable %). The barrier is assumed to limit recharge to ___ cm/yr.

Number of Units: 12 SST Tank Farms/Barriers
Unit Size: 1,247,120 ft^3 (9,328,430 gal)
Operational Duration (yrs): N/A
Operating Efficiency: N/A
Radiation Level: cold
Temp: ambient
Pressure: ambient
pH/Acidity/Alkalinity: neutral
Energetic Reaction Potential: very low, except for blasting to produce rip rap
Process Stability: very high
% Solids in Waste: N/A
Waste Form: N/A
% Organics in Waste: N/A
Flammability: very low

Mechanized Parts / Unit
High-level: 0
Low-level: 0
Cold: ___ 20-yd trucks, (etc.)

Isolated Process Steps / Unit
High-level: 0
Low-level: 0
Cold: (TBD)

Combined Installation Activities: (TBD)

Combined Decontamination/ Decommissioning Disposal/Activities
Decontaminations: 0
Decommissioning & Disposal: Recontouring of borrow pits; disposal of failed cold equipment.

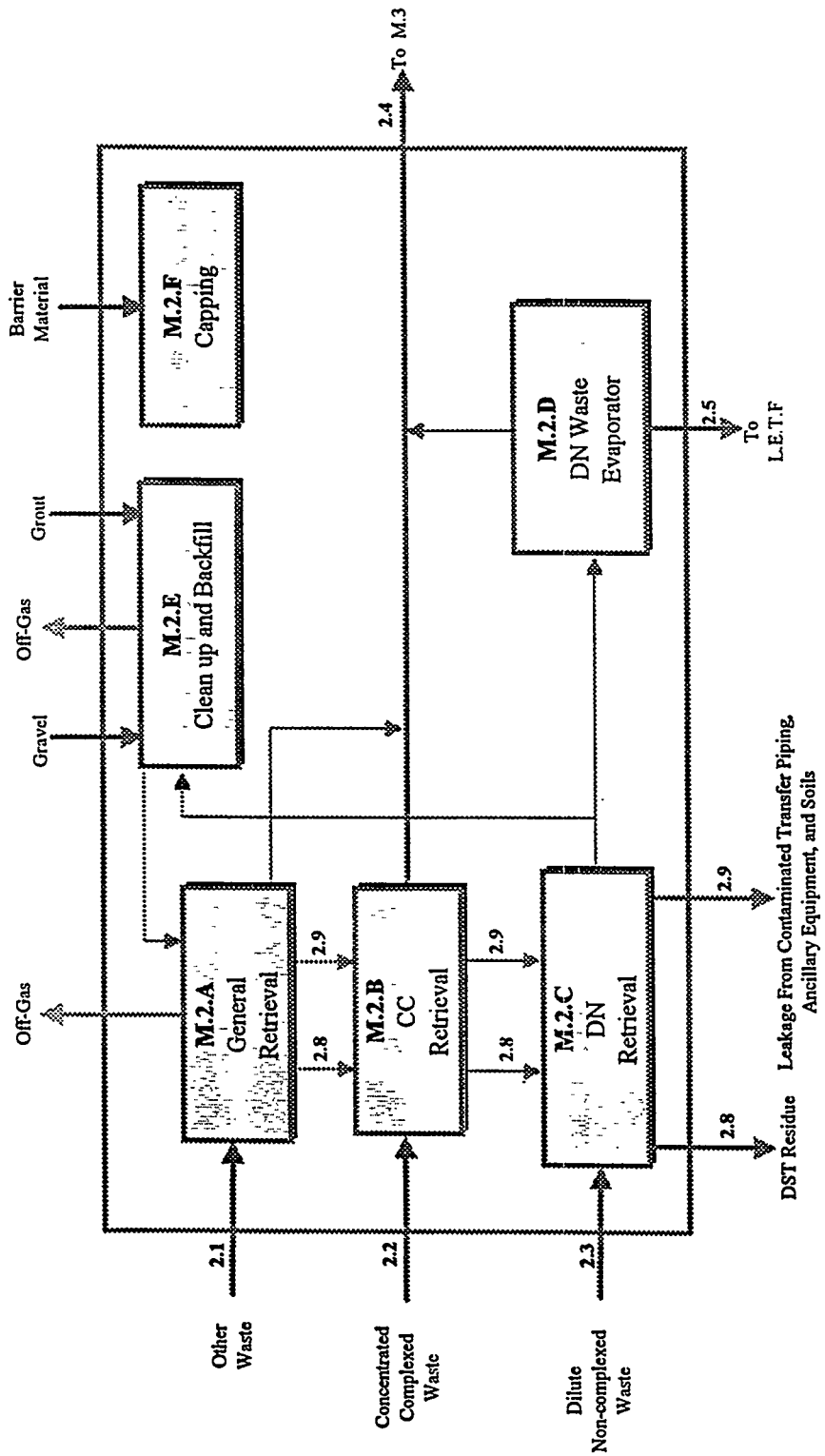

DST Waste Retrieval Flow Sheet.

Module: Base Case M.2, DST Waste Retrieval
Component / Unit Operation: M.2.A, DST Miscellaneous Waste Retrieval System

General Description: This waste stream contains concentrated phosphate waste originating from the decontamination of the N Reactor in the 100 N Area. It also includes the solids portion of the PUREX Neutralized Cladding Removal Waste (NCRW). NCRW solids are classified as transuranic (TRU) waste. This waste also includes TRU solids from Plutonium Finishing Plant (PFP) operations (Halon 1994). The waste is contained in 12 tanks located in the 241-AN, 241-AP, 241-AW, 241-AZ and 241-SY tank farm areas. Tanks 241-AW-101, 241-AN-103, 104, and 105 are identified as Watch List Tanks due to potential for hydrogen gas accumulation above the flammability limit (Halon 1994). Typical tank waste contains an average of 19% solids. Sluicing operations are expected to remove 99.97% of tank waste contents (_____). Waste inventories range from 22,000 to 1,147,000 gallons. A mixer pump system consisting of two to four mixer pumps will be installed in concrete pits above the DSTs and will extend down through riser pipes. The waste will then be pumped out of tank by a waste transfer pump (Wodrich 1993). It is assumed that 10 miles of new 6' encased buried piping and associated equipment is installed to support retrieval operations.

Number of Units: 12 DSTs (Halon 1993)
Unit Size: 1,000,000 to 1,160.000 gallons (Boomer 1993)
Operational Duration (yrs): 3
Operating Efficiency: 70%
Radiation Level: High
Temp: 25 - 90 C, decreasing to 20 C during retrieval (Boomer 1993)
Pressure: tanks, ambient: pumps/sluicers. 150 psi
pH/Acidity/Alkalinity: pH 14, decreasing to pH 8 during retrieval (BEJ)
Energetic Reaction Potential: Low
Process Stability: moderate (some plugging potential exists)
% Solids in Waste: 19% (Halon 1994)
Waste Form: Slurry
% Organics in Waste: 0.3% (Boomer 1993)
Flammability: Low, except for the 4 tanks that contain hydrogen gas

Mechanized Parts / Unit
High-level: 2 to 4 mixer pumps, 1 transfer pump (Wodrich 1993)
Low-level: 0
Cold: 0

Isolated Process Steps / Unit
High-level: 0
Low-level: 0
Cold: 0

Combined Installation Activities: 12 to24 mixer pumps, 12 transfer pumps

Combined Decontamination/ Decommissioning Disposal/Activities
Decontaminations: 0 (see M.2.E and M.2.F)
Decommissioning & Disposal: 0 (see M.2.E and M.2.F)

Module: Base Case M.2. DST Waste Retrieval
Component / Unit Operation: M.2.B Concentrated Complexant Waste Retrieval System

General Description: This waste is a concentrated waste product from the evaporation of dilute complexed waste. The dilute complexed waste is characterized bya high content oforganic carbon including organic complexants. Saltwell liquid from the SSTs is the main source of the dilute complexed waste (Halon 1994). The waste is contained in five DSTs, located in the 241-AN, 241-AY and 241-SY tank farm areas. Tanks 241-SY-101 and 241-SY-103 are identified as Watch List Tanks due to a potential for hydrogen gas accumulation above the flammability limit. Typical tank waste contains an average of 9% solids. Sluicing operations are expected to remove 99.97% of tank waste contents (_____). Waste inventories range from 748,000 to 1,115,000 gallons. A mixer pump system consisting of two to four mixer pumps will be installed in concrete pits above the DSTs and will extend down through riser pipes. The waste will then be pumped out of the tank by a waste transfer pump (Wodrich 1993). It is assumed that 10 miles of new 6" encased buried piping and associated equipment is installed to support retrieval operations.

Number of Units: 5 DST (Halon 1993)
Unit Size: 1,000,000 to 1,160,000 gallons (Boomer 1993)
Operational Duration (yrs): 1
Operating Efficiency: 70%
Radiation Level: High
Temp: 25 - 90 C, decreasing to 20 C during retrieval (Boomer 1993)
Pressure: tanks, ambient: pumps/sluicers. 150 psi
pH/Acidity/Alkalinity: pH 14, decreasing to pH 8 during retrieval (BEJ)
Energetic Reaction Potential: Low (organic phases, H2) (BEJ)
Process Stability: moderate (some plugging potential exists)
% Solids in Waste: 9% (Halon, 1994)
Wasten Form: Slurry
% Organics in Waste: 1.4% (Boomer 1993)
Flammability: Very Low, except for the 2 tanks that contain hydrogen gas

Mechanized Parts / Unit
High-level: 2 to 4 mixer pumps, 1 transfer pump (Wodrich 1993)
Low-level: 0
Cold: 0

Isolated Process Steps / Unit
High-level: 0
Low-level: 0
Cold: 0

Combined Installation Activities: 10 to 20 mixer pumps, 5 transfer pumps

Combined Decontamination/ Decommissioning Disposal/Activities
Decontaminations: 0 (see M.2.E and M.2.F)
Decommissioning & Disposal: 0 (see M.2.E and M.2.F)

Module: Base Case M.2, DST Waste Retrieval
Component / Unit Operation: M.2.C, Dilute Non-Complexed Waste Retrieval System

General Description: Low activity luquid waste originating from T and S plants, the 300 and 400 Areas, PUREX facility (decladding supernatant and miscellaneous waste), 100 N Area (sulfate waste) B Plant, saltwells. and PFP (Plutonium Finishing Plant) supernate (Halon 1994). This waste is contained in 11 tanks, located in the 241-AN, 241-AP, 241-AW and 241-AY tank farm areas. Typical tank waste contains an average of 3% solids. Sluicing operations are expected to remove 99.97% of tank waste contents. Waste inventories range from 18,000 to 1,061,000 gallons. A mixer pump system consisting of two to four mixer pumps will be installed in concrete pits above the DSTs and will extend down throug riser pipes. The waste will then be pumped out of the tank by a waste transfer pump (Wodrich 1993). It is assumed that 10 miles of new 6" encased buried piping and associated equipment is installed to support retrieval operations.

Number of Units: 11 DSTs (Halon 1994)
Unit Size: 1,000,000 to 1,160,000 gallons (Boomer 1993)
Operational Duration (yrs): 2.75
Operating Efficiency: 70%
Radiation Level: High
Temp: 25 - 90 C, decreasing to 20 C during retrieval (Boomer 1993)
Pressure: tanks, ambient: pumps/sluicers, 150 psig
pH/Acidity/Alkalinity: pH 14, decreasing to pH 8 during retrieval (BEJ)
Energetic Reaction Potential: Very Low
Process Stability: moderate (some plugging potential exists)
% Solids in Waste: 3%, (Halon 1994)
Waste Form: Slurry
% Organics in Waste: 0.1% (Boomer 1993)
Flammability: Very Low

Mechanized Parts / Unit
High-level: 2 to 4 mixer pumps, 1 transfer pump (Wodrich 1993)
Low-level: 0
Cold: 0

Isolated Process Steps / Unit
High-level: 0
Low-level: 0
Cold: 0

Combined Installation Activities: 22 to 44 mixer pumps, 11 transfer pumps

Combined Decontamination/ Decommissioning Disposal/Activities
Decontaminations: 0 (see M.2.E and M.2.F)
Decommissioning & Disposal: 0 (see M.2.E and M.2.F)

Module: Base Case M.2, DST Waste Retrieval
Component / Unit Operation: M.2.D 242-A Evaporator

General Description: This evaporator processed dilute DST non-complexed waste from a number of operations including saltwell pumping, purex Plant and N Reactor operations. The 242-A Evaporator produces six streams (primarily stream condensate) which are collected in a condensate collection tank. After filtration, the collected waste becomes the 242-A Evaporator process condensate which is subsequently treated. This process is continuous with typical flow rates of 90 to 140 gpm from the feed tank, to 20 to 60 gpm for condensate and 43 to 90 for the slurry discharge (Tripplet, 1991).

Number of Units: 1 Evaporator (242-A)
Unit Size: 1,000,000 to 1,160,000 gal.
Operational Duration (yrs): 0.25
Operating Efficiency: 70%
Radiation Level: High
Temp: ~110 degrees C
Pressure: 0.68 - 1.64 psig
pH/Acidity/Alkalinity: pH 2 to 12.5
Energetic Reaction Potential: Low
Process Stability: moderate (some plugging potential exists)
% Solids in Waste: 15% (Halon 1994)
Waste Form: Slurry
% Organics in Waste: 0.1% (Boomer 1993)
Flammability: Moderately Low

Mechanized Parts / Unit
High-level: 11 transfer pumps
Low-level: 0
Cold: 0

Isolated Process Steps / Unit
High-level: 3 (vapor-liquid separation, condensation, liquid transfer)
Low-level: 0
Cold: 0

Combined Installation Activities: 11 transfer pumps and piping systems

Combined Decontamination/ Decommissioning Disposal/Activities
Decontaminations: 1
Decommissioning & Disposal:

Module: Base Case M.2. DST Waste Retrieval
Component / Unit Operation: M.2.E, DST Cleanup & Backfill

General Description: Following retrieval of waste, each tank will be partially filled with exhumed DST waste transfer piping, contaminated soil and other associated stable solid waste, resulting from TWRS waste recovery operations. The tank space will then be filled with gravel to the greatest degree practical, followed by injection of grout to completely fill the tank head space. The grout is a pumpable mixture of sand, portland cement, and water. The tank filling action is intended to provide a physically stable base on which to install caps (M.1.F).

Number of Units: 28 DSTs (Boomer 1993)
Unit Size: 1,000,000 to 1,160,000 gallons
Operational Duration (yrs): 7
Operating Efficiency: 25%
Radiation Level: High (tanks and pipe)
Temp: Ambient
Pressure: Ambient
pH/Acidity/Alkalinity: Neutral
Energetic Reaction Potential: Very Low
Process Stability: High
% Solids in Waste: 100%
Waste Form: Solid
% Organics in Waste: 0%
Flammability: Very Low

Mechanized Parts / Unit
High-level: 0.01 Soil Excavators, 0.03 Trucks, 0.01 Pipe Cutters/Loaders, 0.03 Pipe Waste Unloading Stations
Low-level: 0
Cold: 0.03 Gravel distributors, 0.03 Portable Grout Mixing/Pumping Systems

Isolated Process Steps / Unit
High-level: _____ - 0.5 yd soil scoops, 10' pipe cuts, _____ pipe waste loadings, 20 truck pipe waste hauls.
Low-level: 0
Cold: 0 - 0.5 yd soil scoops, 0 truck soil hauls, _____ truck gravel hauls, _____ DST gravel loadings, 13,000 concrete truck hauls.

Combined Installation Activities: 28 Pipe Waste Unloading Stations, 1 Gravel Washer/Crusher, 28 Gravel Distributors, 28 Grout Mixer/Pumpers
Combined Decontamination/ Decommissioning Disposal/Activities
Decontaminations: Soil Excavator (__), Trucks (__), Pipe Cutter/Loaders (__),Gravel Distributors (__)
Decommissioning & Disposal: 2 Soil Excavators, 4 Trucks, 2 Pipe Cutters/Loaders. 4 Pipe Waste Unloading Stations.

Module: Base Case M.2, DST Waste Retrieval
Component / Unit Operation: M.2.F. Capping

General Description: Following retrieval of the waste from the tanks (M.1.A) and stabilization of the 6 DST tank farms will be capped with a Hanford Protective Barrier. Dimensions of the barrier are assumed to be ____x_____ with a minimum thickness of 5.67 ft. The barrier comprises the following materials: silt with pea gravel (29%), compacted silt (29%), filter sand (9%), filter gravel (9%), drainage gravel (9%), asphalt (9%), asphalt base (6%), and grading fill (variable %). The barrier is assumed to limit recharge to _____ cm/yr.

Number of Units: 6 DST Tank Farms/Barriers
Unit Size: 1,000,000 to 1,160,000
Operational Duration (yrs): N/A
Operating Efficiency: N/A
Radiation Level: Cold
Temp: Ambient
Pressure: Ambient
pH/Acidity/Alkalinity: Neutral
Energetic Reaction Potential: Very Low, except for blasting to produce rip rap
Process Stability: Very High
% Solids in Waste: N/A
Waste Form: N/A
% Organics in Waste: N/A
Flammability: Very Low

Mechanized Parts / Unit
High-level: 0
Low-level: 0
Cold: ___ 20-yd trucks, (etc.)

Isolated Process Steps / Unit
High-level: 0
Low-level: 0
Cold: (TBD)

Combined Installation Activities: (TBD)

Combined Decontamination/ Decommissioning Disposal/Activities
Decontaminations: 0
Decommissioning & Disposal: Recontouring of borrow pits, disposal of failed cold equipment.

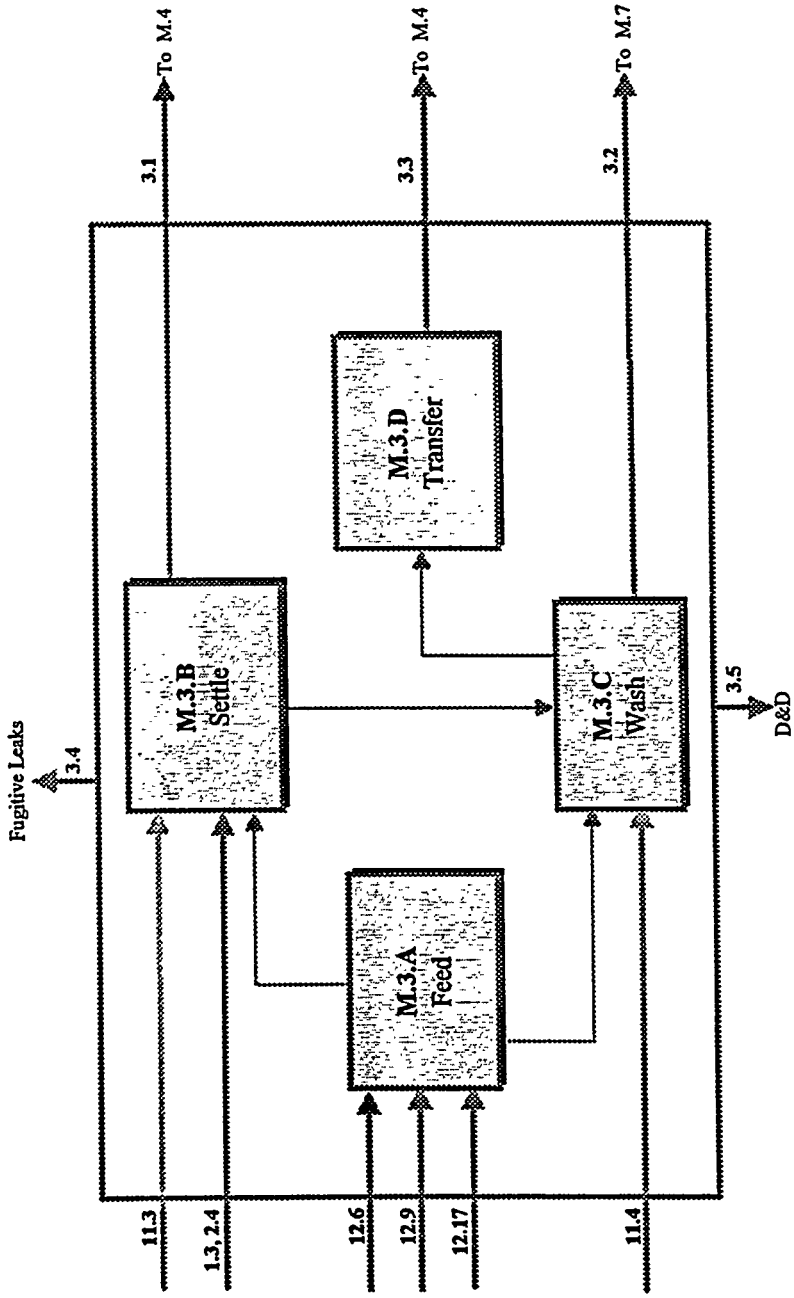

DST Sludge Wash Flow Sheet.

Module: M.3, DST Sludge Wash
Component / Unit Operation: M.3.A, Chemical Feed System

General Description: This feed stream distributes flocculant, NaOH, and NaNO2 to the settling and washing unit operations for Module 3. Chemical addition in the Sludge Washing process is used for the formation of a wash solution. Bulk flocculant is utilized to enhance the settling properties of the waste.

Number of Units: 3 tanks
Unit Size:
Operational Duration (yrs): N/A
Operating Efficiency: 60%
Radiation Level: Cold
Temp: Ambient
Pressure: - 0.04 psig
pH/Acidity/Alkalinity: ~ 7 - 8
Energetic Reaction Potential: Very Low - Low
Process Stability: High
% Solids in Waste: 0%
Waste Form: Liquid
% Organics in Waste: 0%
Flammability: Very Low

Mechanized Parts / Unit
High-level: 0
Low-level: 0
Cold: 0

Isolated Process Steps / Unit
High-level: 0
Low-level: 0
Cold: 0

Combined Installation Activities: 3 to 6" pipes

Combined Decontamination/ Decommissioning Disposal/Activities
Decontaminations:
Decommissioning & Disposal:

Module: M.3, DST Sludge Wash
Component / Unit Operation: M. 3.B, Sludge Settling Process

General Description: This multi-step operation involves the settling of sludge formed by the in-line conditioning of DST and SST waste. Conditioning is done by mixing the waste with a polyelectrolyte flocculant solution before it enters the First Stage Settling Tanks. The polyelectrolyte coagulates colloidal solids thereby increasing solids recovery (Boomer 1993). The settled material is pumped as a slurry to a wash tank. Decant from the First Stage Settling Tank is again mixed in-line with a flocculant solution and sent to the Secondary Settling Tanks. The slurry from this process is sent to a wash tank and the supernatant is routed to an accumulation tank.

Number of Units: 8 Double Shell Settling Tanks, 16 pumps
Unit Size:
Operational Duration (yrs): 13 (Boomer 1993)
Operating Efficiency: 75%
Radiation Level: High
Temp: Ambient
Pressure: - 0.04 psig
pH/Acidity/Alkalinity: 8 - 14
Energetic Reaction Potential: Very Low
Process Stability: High
% Solids in Waste: 2% (first stage), 20% (second stage, after decant)
Waste Form: Slurry
% Organics in Waste: 0% (both)
Flammability: Low

Mechanized Parts / Unit
High-level: 16 transfer pumps
Low-level: 0
Cold: 0

Isolated Process Steps / Unit
High-level: 2
Low-level: 0
Cold: 0

Combined Installation Activities: 16 pumps, piping

Combined Decontamination/ Decommissioning Disposal/Activities
Decontaminations:
Decommissioning & Disposal:

Module: M.3, DST Sludge Wash
Component / Unit Operation: M.3.C, Sludge Wash Process

General Description: The slurry from the sludge settling operation is washed with the wash solution and is mixed with the slurry from the Second Stage Settling Tanks. The mixture is allowed to settle and then is decanted. The decant is pumped to Wash Solution Accumulation Tanks. The slurry is then washed, mixed in-line with a polyelectrolyte, and pumped to a Second Wash Tank where it is allowed to settle. The decant from the Second Wash Tank is also pumped to the Wash Solution Accumulation Tank. This slurry is pumped to HLW Accumulation Tanks (Boomer 1993).

Number of Units: 4 Double Shell Tanks, 8 pumps
Unit Size:
Operational Duration (yrs): 13 (Boomer 1993)
Operating Efficiency: 75%
Radiation Level: High
Temp: Ambient
Pressure: - 0.04 psig
pH/Acidity/Alkalinity: 8 - 12
Energetic Reaction Potential: Very Low
Process Stability: High
% Solids in Waste: 0.1% (decant), 20% (slurry)
Waste Form: Decant, slurry
% Organics in Waste: 0.02% (decant), 0.07% (slurry)
Flammability: Low

Mechanized Parts / Unit
High-level: 8 transfer pumps
Low-level: 0
Cold: 0

Isolated Process Steps / Unit
High-level: 2
Low-level: 0
Cold: 0

Combined Installation Activities: 8 pumps, piping

Combined Decontamination/ Decommissioning Disposal/Activities
Decontaminations:
Decommissioning & Disposal:

Module: M.3, DST Sludge Wash
Component / Unit Operation: M.3.D, Wash Transfer Process

General Description: This processes involves pumping the decant from the wash solution accumulation tanks to the wash solution transfer tanks where they are sampled before being fed to the evaporator (Boomer 1993).

Number of Units: 2 double shell transfer tanks, 4 pumps
Unit Size:
Operational Duration (yrs): 13 (Boomer 1993)
Operating Efficiency: 75%
Radiation Level: High
Temp: Ambient
Pressure: - 0.04 psig
pH/Acidity/Alkalinity: 8 - 10
Energetic Reaction Potential: Very Low
Process Stability: High
% Solids in Waste: 0.1%
Waste Form: Liquid
% Organics in Waste: 0.02%
Flammability: Low

Mechanized Parts / Unit
High-level: 4 transfer pumps
Low-level: 0
Cold: 0

Isolated Process Steps / Unit
High-level: 1
Low-level: 0
Cold: 0

Combined Installation Activities: 4 pumps, piping

Combined Decontamination/ Decommissioning Disposal/Activities
Decontaminations:
Decommissioning & Disposal:

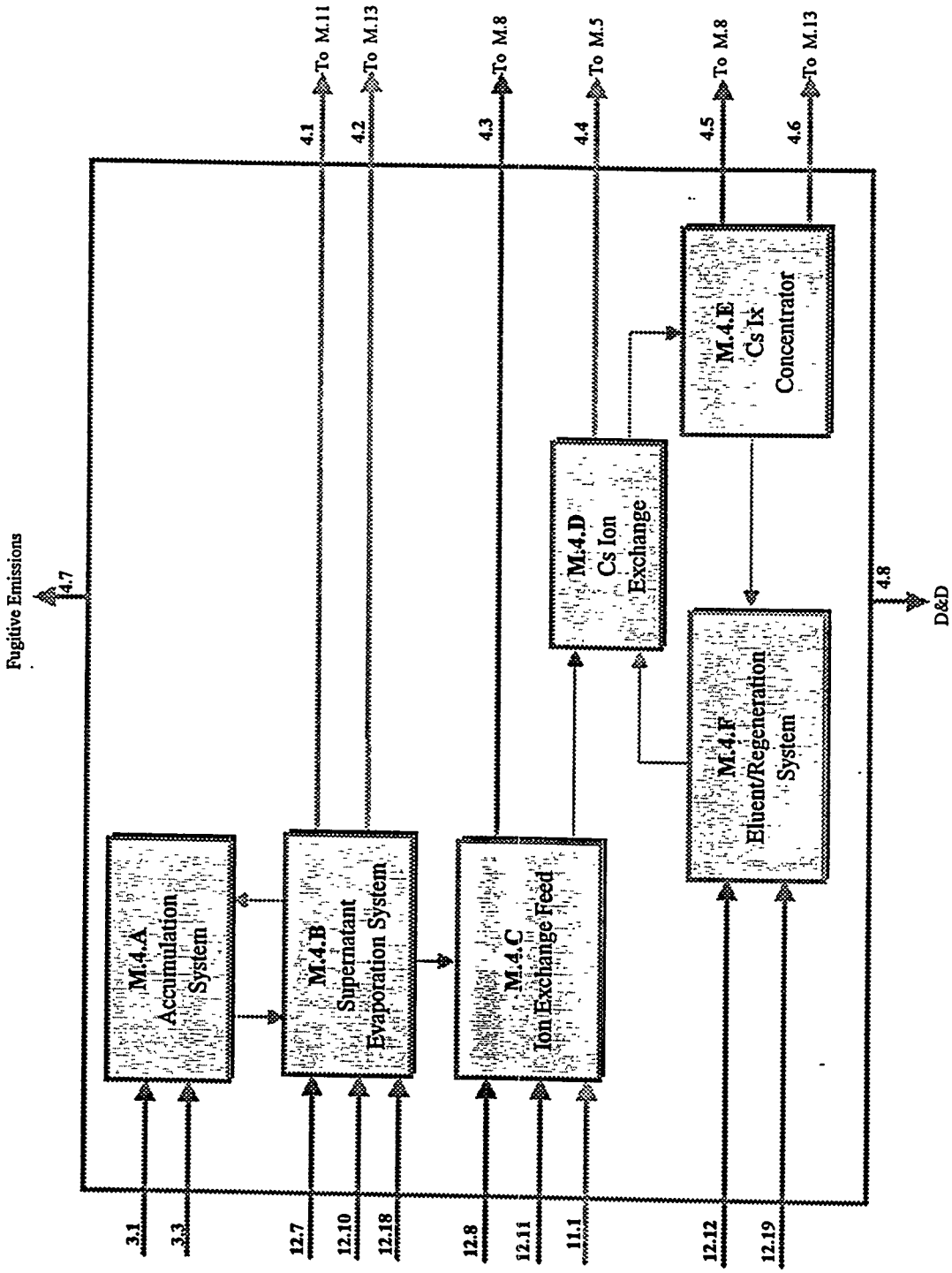

Cesium Ion Exchange Flow Sheet.

Module: Test Case 2: M.4. Cesium Ion Exchange
Component / Unit Operation: M.4.A. Accumulation System

General Description: This system accumulated decant from the sludge washing system. Decant from sludge washing operations is transferred to the Supernatant Accumulation Tanks. Then the decant stream is pumped into the Supernatant Transfer Tank where it is divided into two waste streams. The first portion of the stream is sent to a LLW Feed Accumulation Tank. The second is a liquid stream sent to a receipt/sample tank.

Number of Units: 8 accumulation tanks, 6 receipt./sample tanks. 14 pumps
Unit Size:
Operational Duration (yrs): 13 (Boomer 1993)
Operating Efficiency: 75%
Radiation Level: High
Temp: Ambient
Pressure: 0.04 psig
pH/Acidity/Alkalinity: 8 - 14
Energetic Reaction Potential: Very Low
Process Stability:
% Solids in Waste: 0.01% (accumulation stream). 0% (sample stream)
Waste Form: liquid
% Organics in Waste: 0.1% (accumulation stream). 0% (sample stream)
Flammability: Very Low

Mechanized Parts / Unit
High-level: 0
Low-level: 14 pumps
Cold: 0

Isolated Process Steps / Unit
High-level:
Low-level:
Cold:

Combined Installation Activities:

Combined Decontamination/ Decommissioning Disposal/Activities
Decontaminations:
Decommissioning & Disposal:

Module: Test Case 2: M.4, Cesium Ion Exchange
Component / Unit Operation: M.4.B, Supernatant Evaporator System

General Description: This system receives a liquid stream from the accumulation system Receipt/Sample Tank, and bulk NaNO2, bulk H2O and bulk NaOH streams. The liquid stream enters the Evaporator Feed Tank and is pumped into the Supernatant Evaporator where the supernatant is concentrated and the vapors are sent to the cooling condensor and treated. The remaining supernatant in the Supernatant Evaporator flows into a catch tank and is then pumped into a Sample Tank where the bottoms are sampled. The concentrated supernatant is then pumped out into two streams; one proceeding to the Cs IX Feed Adjust Tank and the other to the Transfer Tank. In addition, the bulk NaNO2 and bulk water streams each flow into a Concentrated Supernatant NaNO2 Makeup Tank. The liquid stream from this tank also flows into the Transfer Tank with the concentrated supernatant. A third stream of bulk NaOH flows into the Transfer Tank before all LLW is pumped back out to the LLW Feed Accumulation Tank.

Number of Units: 1 makeup tank, 1 catch tank, 1 sample tank, 1 transfer tank, 1evaporator, 1 condensor, 3 pumps
Unit Size:
Operational Duration (yrs): 13 (Boomer 1993)
Operating Efficiency: 60%
Radiation Level: High
Temp: Ambient - 110 degrees Celsius
Pressure: 0.04 psig
pH/Acidity/Alkalinity: 8 - 14
Energetic Reaction Potential: Very Low - Low
Process Stability:
% Solids in Waste: 0% (LLW stream), 0.01% (Cs IX stream)
Waste Form: Liquid solution
% Organics in Waste: 0% (LLW stream), 0.13% (Cs IX stream)
Flammability: Very Low

Mechanized Parts / Unit
High-level: 3 pumps
Low-level: 0
Cold: 0

Isolated Process Steps / Unit
High-level:
Low-level:
Cold:

Combined Installation Activities:

Combined Decontamination/ Decommissioning Disposal/Activities
Decontaminations:
Decommissioning & Disposal:

Module: Test Case 2: M.4, Cesium Ion Exchange
Component / Unit Operation: M.4.C, Ion Exchange Feed

General Description: This system takes the liquid stream from the LLW Feed Accumulation Tank into the Receipt/Sample Tanks to be sampled. Then the liquid is pumped into the Cs IX Feed Adjust Tank. Recycled water, bulk NaOH, and concentrated supernatant from the Concentrated Supernatant Tank also enter the Cs IX Feed Adjust Tank. After adjustment, the liquid stream is pumped into the Cs IX Feed Tank before being pumped through the frit filter. Recycled water and filter media are also sent through the filter, with the filtrate being sent to the Cs IX System. The filtered liquid (4.67% solids) waste stream enters the Filter Bed Catch Tank before being pumped to the HLW melter.

Number of Units: 9 pumps, 5 sample tanks, 1 feed adjust tank, 1 feed tank, 1catch tank, 1 frit filter
Unit Size:
Operational Duration (yrs): 13 (Boomer 1993)
Operating Efficiency: 60%
Radiation Level: High
Temp: Ambient
Pressure: 0.04 psig
pH/Acidity/Alkalinity: 8 - 14
Energetic Reaction Potential: Very Low - Low
Process Stability:
% Solids in Waste: 4.67% (HLW stream), 0% (filtrate stream)
Waste Form: Liquid
% Organics in Waste: 0.02% (HLW stream), 0.13% (filtrate stream)
Flammability: Very Low

Mechanized Parts / Unit
High-level: 9 pumps
Low-level: 0
Cold: 0

Isolated Process Steps / Unit
High-level:
Low-level:
Cold:

Combined Installation Activities:

Combined Decontamination/ Decommissioning Disposal/Activities
Decontaminations:
Decommissioning & Disposal:

Module: Test Case 2: M.4, Cesium Ion Exchange
Component / Unit Operation: M.4.D, Cesium Ion Exchange

General Description: The filtered stream from the Ce IX Feed System flows into the Ce IX columns, loaded with Duolite resin, where almost all of the cesium is captured. The first two columns are loaded in series while the third column is regenerated. the remainder of the solution flows into the Cesium Waste Tank and is then pumped into the Cesium Waste Sample Tank for sampling. During regeneration of the third column, a water flush stream is used to remove the remaining cesium solution. A sodium scrub stream removes a large portion of the resident sodium and Ce and flows to the Cesium Waste Tank. The cesium eluent stream removes the remaining sodium and cesium flows to the Cs IX Eluent Catch Tank, where the stream is pumped to the Cs IX Concentrator system. The eluent from the flush stream is used to rinse the column of acid, sending 25% to the Eluent Catch Tank and 75% to the Waste Tank. Two effluent regeneration streams also enter the third column, with the stream flowing into the Waste Tank (Boomer 1993).

Number of Units: 3 Cs IX columns, 3 pumps, 1 catch tank, 1 sample tank, 1 waste tank
Unit Size: 57 m3 (eluant tank), 204 m3 (waste and sample tanks), 4.88 m x 4.88 m (columns)
Operational Duration (yrs): 13 (Boomer 1993)
Operating Efficiency: 60%
Radiation Level: High
Temp: Ambient
Pressure: 0.04 to 50 psig
pH/Acidity/Alkalinity: <1 - >14
Energetic Reaction Potential: Very Low - Moderate
Process Stability: Medium
% Solids in Waste: 0% (waste stream), 0% (eluant stream)
Waste Form: Liquid
% Organics in Waste: 0.08% (waste stream), 0% (eluant stream)
Flammability: Very Low - Low

Mechanized Parts / Unit
High-level: 0
Low-level: 3 pumps
Cold: 0

Isolated Process Steps / Unit
High-level:
Low-level:
Cold:

Combined Installation Activities:

Combined Decontamination/ Decommissioning Disposal/Activities
Decontaminations:
Decommissioning & Disposal:

Module: Test Case 2: M.4, Cesium Ion Exchange
Component / Unit Operation: M.4.E, Cs IX Concentrator

General Description: The concentrator system concentrates the liquid stream pumped from the Cs IX Eluent Catch Tank. The bottoms are sent to the Concentrator Catch Tank awaiting neutralization. The vapors from the concentrator are condensed and released to their appropriate systems (Boomer 1993).

Number of Units: 1 concentrator, 1 catch tank, 1 condensor, 1 pump
Unit Size:
Operational Duration (yrs): 13 (Boomer 1993)
Operating Efficiency: 60%
Radiation Level: High
Temp: 60 - 110 degrees Celsius
Pressure: 0.04 psig
pH/Acidity/Alkalinity: Neutral - <1
Energetic Reaction Potential: Very Low - Low
Process Stability: Medium
% Solids in Waste: 0%
Waste Form: Liquid
% Organics in Waste: 0%
Flammability: Low

Mechanized Parts / Unit
High-level: 0
Low-level: 1 pump
Cold: 0

Isolated Process Steps / Unit
High-level:
Low-level:
Cold:

Combined Installation Activities:

Combined Decontamination/ Decommissioning Disposal/Activities
Decontaminations:
Decommissioning & Disposal:

Module: Test Case 2: M.4, Cesium Ion Exchange
Component / Unit Operation: M.4.F, Eluent/Regeneration System

General Description: This system receives bulk water, bulk HNO3, bulk NaOH, and liquid streams from the Cs IX Waste Tank and the Concentrator for Cs IX. The bulk water is distributed to six tanks: Cesium Nitric Acid, Cs IX Acid Regeneration Feed, Startup Nitric Acid (4.2m), NaOH Regeneration (2.0m), NaOH Regeneration (0.5m), and NaOH Neutralizing Solution. Bulk HNO3 is sent to the Cesium Nitric Acid and Startup Nitric Acid Tanks and to the Cs IX System for neutralization. The liquid stream from the Cesium Nitric Acid Tank flows into the Cs IX Regeneration Feed Tank. The Acid Recycle Tank stream, fed by the concentrator system, is pumped into the Acid Regeneration Feed Tank to mix with the cesium citric acid and bulk water streams. The combined stream is then pumped to the Cs IX regeneration column. The Startup Nitric Acid Tank is sent to the Concentrator System for concentration, while the NaOH Neutralizing Solution Tank stream is sent to the Concentrator Catch Tank for neutralization of the concentrate. The two NaOH Regeneration Tanks flow into the Cs IX Caustic Regeneration Feed Tank. The stream from this tank is also pumped into the regeneration column of the Cs IX System.

Number of Units: 3 pumps, 2 feed tanks, 2 nitric acid tanks, 2 regeneration tanks, 1 solution tank, 1 recycle tank
Unit Size:
Operational Duration (yrs): 13 (Boomer 1993)
Operating Efficiency: 60%
Radiation Level: Low
Temp: Ambient
Pressure: 0.04 psig to Ambient
pH/Acidity/Alkalinity: <1 - >14
Energetic Reaction Potential: Very Low - Low
Process Stability: Medium
% Solids in Waste: 0%
Waste Form: Liquid
% Organics in Waste: 0%
Flammability: Very Low

Mechanized Parts / Unit
High-level: 0
Low-level: 3 pumps
Cold: 0

Isolated Process Steps / Unit
High-level: 0
Low-level: 0
Cold: 0

Combined Installation Activities: 3 pumps, piping

Combined Decontamination/ Decommissioning Disposal/Activities
Decontaminations:
Decommissioning & Disposal:

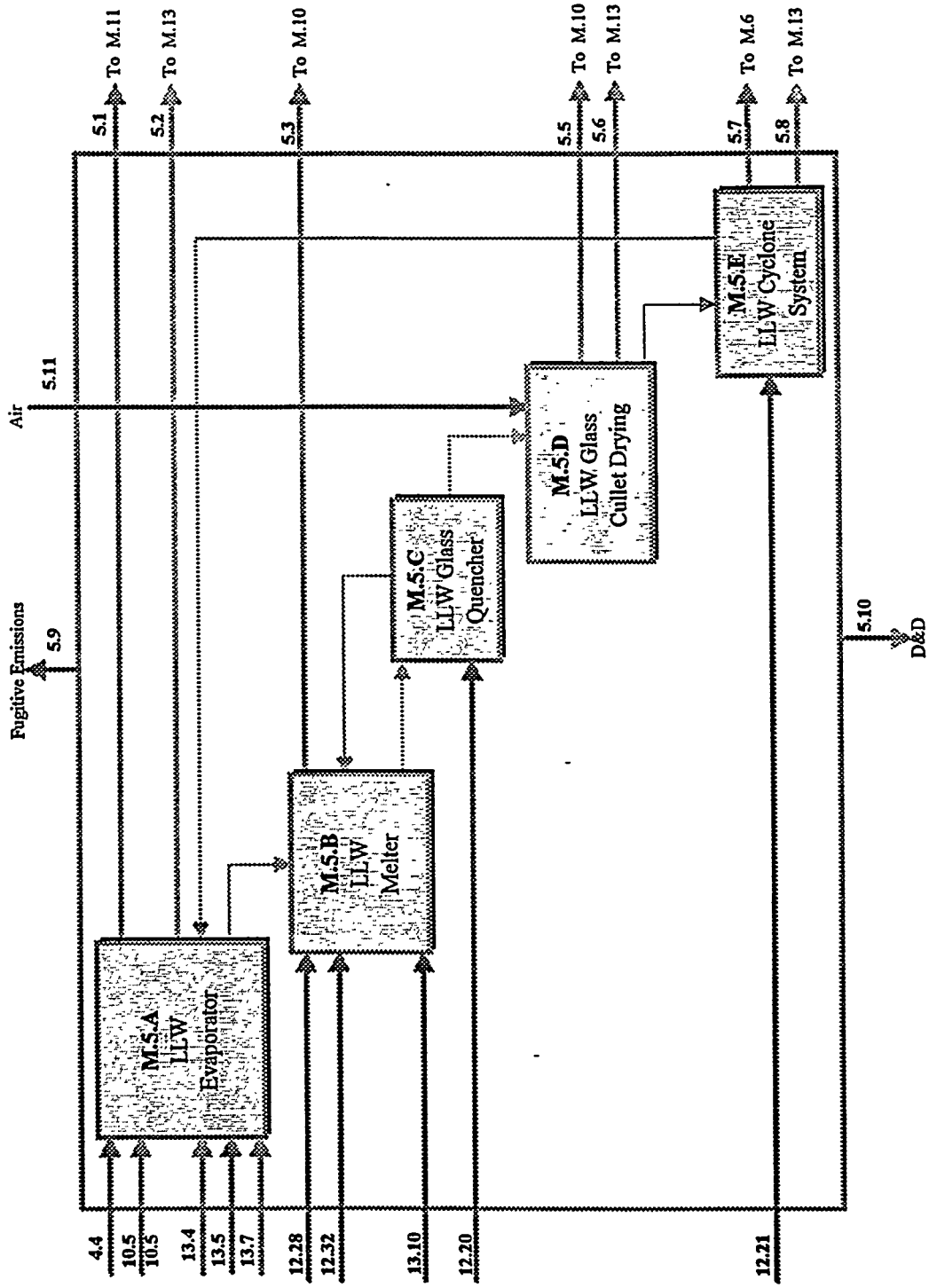

LLW Glass in Sulfur Flow Sheet.

Module: M.5. LLW Glass in Sulfur
Component / Unit Operation: M.5.A. LLW Evaporator

General Description: In this unit the LLW Evaporator Feed Tank is fed by seven streams, six of which are filter washes. The liquid stream is pumped from the tank to the LLW Feed Evaporator. The vapors from the evaporator are condensed and sent to other systems. A liquid waste stream also exits the LLW Feed Evaporator to the LLW Melter.

Number of Units: 1 feed tank, 1 evaporator, 1 condensor
Unit Size:
Operational Duration (yrs): 13 (Boomer 1993)
Operating Efficiency: 60%
Radiation Level: Low
Temp: Ambient - 110 degrees Celsius
Pressure: 0.04 psig
pH/Acidity/Alkalinity: 10 - 14
Energetic Reaction Potential: Low
Process Stability: Medium
% Solids in Waste: 0.0009%
Waste Form: Liquid
% Organics in Waste: 0.17%
Flammability: Very Low

Mechanized Parts / Unit
High-level: 0
Low-level: 0
Cold: 0

Isolated Process Steps / Unit
High-level:
Low-level:
Cold:

Combined Installation Activities:

Combined Decontamination/ Decommissioning Disposal/Activities
Decontaminations:
Decommissioning & Disposal:

Module: M.5, LLW Glass in Sulfur
Component / Unit Operation: M.5.B, LLW Melter

General Description: The LLW Melter Feed Adjustment Tanks Receive two LLW slurry streams and one LLW liquid stream. Following adjustment, the liquid stream is pumped from the tanks to the LLW Melter Feed Tanks before being pumped to the LLW Melter. Bulk glass enters the Head Bin, is fed through the Rotary Star Feeder, then the Weigh Feeder, and then another Rotary Star Feeder before entering the LLW Melter. Bulk kerosene and oxygen are the third and fourth streams to flow into the LLW melter. The final step incorporates the melted material into the glass separator with two steams (one slurry, one liquid) flowing to new locations.

Number of Units: 1 feed adjustment tank, 1 feed tank, 1 head bin, 2 Rotary Star feeders, 1 weigh feeder, 1 LLW melter, 1 glass separator
Unit Size: 102 m3 (feed adjustment and feed tanks), 3.57 kg/s (head bin and weigh feeder), 1,268 kg/s (melter)
Operational Duration (yrs): 13 (Boomer 1993)
Operating Efficiency: 60%
Radiation Level: Low
Temp: Ambient - 1300 degrees Celsius
Pressure: 0.04 psig
pH/Acidity/Alkalinity: 10 - 14
Energetic Reaction Potential: Very Low - Moderately High
Process Stability: Medium
% Solids in Waste: 100% (slurry stream), 0.5% (liquid stream)
Waste Form: Slurry, liquid
% Organics in Waste: 0% (slurry stream), 0% (liquid stream)
Flammability: Very Low - Moderately High

Mechanized Parts / Unit
High-level: 0
Low-level: 3 feeders, 1 glass separator
Cold: 0

Isolated Process Steps / Unit
High-level:
Low-level:
Cold:

Combined Installation Activities:

Combined Decontamination/ Decommissioning Disposal/Activities
Decontaminations:
Decommissioning & Disposal:

Module: M.5, LLW Glass in Sulfur
Component / Unit Operation: M.5.C, LLW Glass Quencher

General Description: The molten glass flows through the water filled Quench Flume and produces cullet stored in the LLW Cullet Catch Tank. The vapor from the Quench Flume flows through a condenser and is rerouted back into the catch tank. The glass cullet is pumped through a screen to remove fines and oversize cullet before being sent to dry. A liquid waste stream is pumped from the screen into the LLW Filter Catch Tank before returning to the LLW Quench Water Recycle Tank. The stream is pumped through a chiller for cooling and then back into the quench flume. The unusable waste stream from the LLW Filter Catch Tank flows back to the LLW Melter Feed Adjustment Tank in the LLW Melter system (Boomer 1993).

Number of Units: 5 pumps, 2 catch tanks, 1 recycle tank, 1 quench flume, 1 roll crusher, 1 screen, 1 condenser, 1 chiller
Unit Size:
Operational Duration (yrs): 13 (Boomer 1993)
Operating Efficiency: 60%
Radiation Level: Low
Temp: 40 - 100 degrees Celsius
Pressure: 0.04 psig
pH/Acidity/Alkalinity: 8 - 10
Energetic Reaction Potential: Very Low - Moderately Low
Process Stability:
% Solids in Waste: 98%
Waste Form: Solid
% Organics in Waste: 0%
Flammability: Very Low

Mechanized Parts / Unit
High-level: 5 pumps, 1 roll crusher, 1 chiller
Low-level: 0
Cold: 0

Isolated Process Steps / Unit
High-level:
Low-level:
Cold:

Combined Installation Activities:

Combined Decontamination/ Decommissioning Disposal/Activities
Decontaminations:
Decommissioning & Disposal:

Module: M.5, LLW Glass in Sulfur
Component / Unit Operation: M.5.D, LLW Glass Cullet Drying

General Description: The LLW Cullet Lag Storage Receives cullet from the LLW Glass Quencher screen and air for drying and transport purposes. The air is circulated through two prefilters, then blown through two heaters and four HEPA filters before reaching the LLW Cullet Lag Storage. The vapors from the storage are sent through a condenser, with the condensate flowing back into a LLW Condensate Catch Tank. The condensate is pumped from this tank to process condensate treatment. The product from the LLW Cullet Lag Storage is sent to the LLW Cyclone System for further processing.

Number of Units: 1 LLW cullet lag storage, 1 catch tank, 4 HEPA filters, 2 prefilters, 2 heaters, 2 blowers, 1 condenser, 1 pump
Unit Size:
Operational Duration (yrs): 13 (Boomer 1993)
Operating Efficiency: 60%
Radiation Level: Low
Temp: Ambient - 80 degrees C
Pressure: -4 to +4 psig
pH/Acidity/Alkalinity: 8 - 10
Energetic Reaction Potential: Very Low
Process Stability:
% Solids in Waste: 0.02% (condensed stream), 0% (condensate treatment stream), 19% (product stream)
Waste Form: liquid (condensed and condensate treatment streams), slurry (product stream)
% Organics in Waste: 0% (all streams)
Flammability: Very Low

Mechanized Parts / Unit
High-level: 0
Low-level: 2 blowers, 2 heaters, 1 pump
Cold: 0

Isolated Process Steps / Unit
High-level:
Low-level:
Cold:

Combined Installation Activities:

Combined Decontamination/ Decommissioning Disposal/Activities
Decontaminations:
Decommissioning & Disposal:

Module: M.5, LLW Glass in Sulfur
Component / Unit Operation: M.5.E, LLW Cyclone System

General Description: The Cyclone with sintered metal filters receives the product stream from the LLW Cullet Lag Storage. Pulse air is added to the filter with the solid product flowing out through a Rotary Star Feeder into a day bin. Another Rotary Star Feeder sends the solids to be mixed with sulfur cement. The filter wash stream also exits the Cyclone. This stream passes through two heaters, four metal HEPA filters, and two blowers. A filter wash water stream also enters the metal HEPA filter process. The liquid stream is sent to the PVOG Cell Ventilation.Filtration and Exhaust system, while the solids are sent to the Filter Wash Catch Tank. The filter wash stream is then pumped back to the LLW Evaporator Feed Tank in the LLW Evaporator system.

Number of Units: 4 metal HEPA filters, 2 heaters, 2 blowers, 2 Rotary Star Feeders, 1 cyclone (with 3 sintered metal filters), 1 day bin, 1 catch tank, 1 pump
Unit Size:
Operational Duration (yrs): 13 (Boomer 1993)
Operating Efficiency: 60%
Radiation Level: Low
Temp: Ambient to -80 degrees Celsius
Pressure: -4 to +4 psig
pH/Acidity/Alkalinity: 8 - 10
Energetic Reaction Potential: Very Low
Process Stability:
% Solids in Waste: 100% (product stream), 0% (PVOG stream)
Waste Form: Solid (product stream), liquid (PVOG stream)
% Organics in Waste: 0%
Flammability: Very Low

Mechanized Parts / Unit
High-level: 0
Low-level: 2 feeders, 2 blowers, 1 pump
Cold: 0

Isolated Process Steps / Unit
High-level:
Low-level:
Cold:

Combined Installation Activities:

Combined Decontamination/ Decommissioning Disposal/Activities
Decontaminations:
Decommissioning & Disposal:

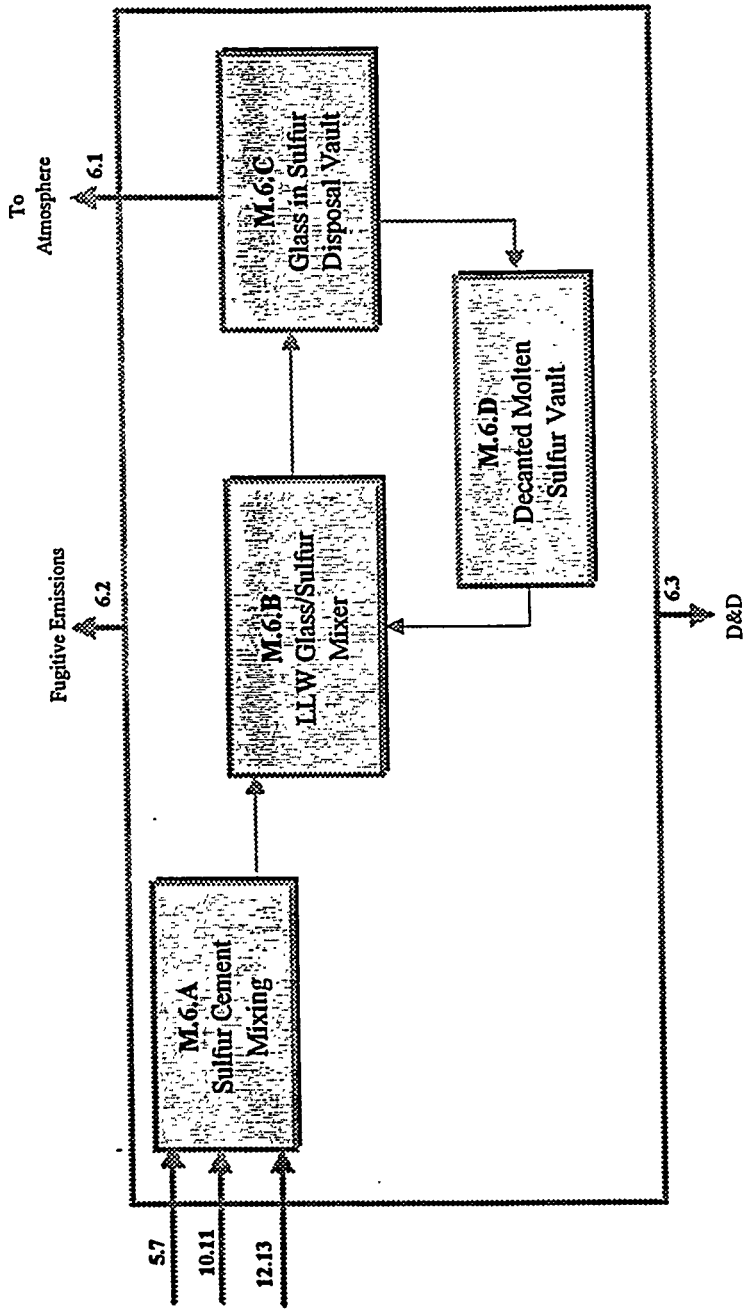

LLW Glass in Sulfur Vaults Flow Sheet.

Module: M.6. LLW Glass in Sulfur Vaults
Component / Unit Operation: M.6.A. Sulfur Cement Mixing

General Description: This system receives recovered sulfur and stores it in the Recovered Sulfur Storage Tank. This stream, along with bulk sulfur, bulk DCPD, and bulk CPD Oligomer, is pumped into two Sulfur Cement Mixing Tanks for mixing. The combined streams are then pumped through a cell wall and into the LLW Glass/Sulfur Mixer Unit to mix with the glass cullet.

Number of Units: 3 pumps, 2 mixing tanks, 1 storage tank
Unit Size:
Operational Duration (yrs): 13 (Boomer 1993)
Operating Efficiency: 60%
Radiation Level: Low
Temp: ~130 degrees Celsius
Pressure: 0.04 psig
pH/Acidity/Alkalinity: NA
Energetic Reaction Potential: Low - Moderately Low
Process Stability:
% Solids in Waste: 0.01%
Waste Form: Liquid
% Organics in Waste: 0%
Flammability: Low - Moderately Low

Mechanized Parts / Unit
High-level: 0
Low-level: 3 pumps
Cold: 0

Isolated Process Steps / Unit
High-level:
Low-level:
Cold:

Combined Installation Activities:

Combined Decontamination/ Decommissioning Disposal/Activities
Decontaminations:
Decommissioning & Disposal:

Module: M.6, LLW Glass in Sulfur Vaults
Component / Unit Operation: M.6.B, LLW Glass/Sulfur Mixer

General Description: The sulfur cement liquid stream from the Sulfur Cement Mixing System, in combination with the glass aggregate, flows into the mixer in the LLW Glass/Sulfur Mixer System. The mixing of the two forms a sulfur polymer cement that flows into the Surge Tank and then to the Sulfur Pump. From there, the cement is pumped through a heated pipeline into the disposal vault (Boomer 1993).

Number of Units: 1 mixer, 1 surge tank, 1 sulfur pump
Unit Size: 4.42E-3 m3/s (mixer), 0.26 m3 (surge tank), 4.42E-3 m3/s (sulfur pump)
Operational Duration (yrs): 13 (Boomer 1993)
Operating Efficiency: 60%
Radiation Level: Low
Temp: ~130 degrees Celsius
Pressure: 0.04 - 50 psig
pH/Acidity/Alkalinity: NA
Energetic Reaction Potential: Low
Process Stability:
% Solids in Waste: 50%
Waste Form: Slurry
% Organics in Waste: 0%
Flammability: Low

Mechanized Parts / Unit
High-level: 0
Low-level: 1 mixer, 1pump
Cold: 0

Isolated Process Steps / Unit
High-level:
Low-level:
Cold:

Combined Installation Activities:

Combined Decontamination/ Decommissioning Disposal/Activities
Decontaminations:
Decommissioning & Disposal:

Module: M.6, LLW Glass in Sulfur Vaults
Component / Unit Operation: M.6.C, Glass In Sulfur Disposal Vault

General Description: The disposal vault is filled with decanted molten sulfur polymer cement pumped from the sulfur pump. The glass in sulfur product stream also empties into this vault. Exhaust exits the vault and the decanted molten sulfur is decanted and sent to the Decanted Molten Sulfur Vault.

Number of Units: 1 disposal vault
Unit Size:
Operational Duration (yrs): 13 (Boomer 1993)
Operating Efficiency: 60%
Radiation Level: Low
Temp: ~130 degrees Celsius
Pressure: 0.04 psig
pH/Acidity/Alkalinity: N/A
Energetic Reaction Potential: Low
Process Stability:
% Solids in Waste: 0% (exhaust), 0.01% (decanted molten sulfur)
Waste Form: Gas, liquid
% Organics in Waste: 0%
Flammability: Low

Mechanized Parts / Unit
High-level: 0
Low-level: 0
Cold: 0

Isolated Process Steps / Unit
High-level:
Low-level:
Cold:

Combined Installation Activities:

Combined Decontamination/ Decommissioning Disposal/Activities
Decontaminations:
Decommissioning & Disposal:

Module: M.6. LLW Glass in Sulfur Vaults
Component / Unit Operation: M.6.D, Decanted Molten Sulfur Vault

General Description: The Decanted Molten Sulfur Vault receives the decanted molten sulfur from the disposal vault and stores it. The remaining gasses are released through heat traced piping out into the LLW Glass/Sulfur Mixer System.

Number of Units: 1 decanted molten sulfur vault
Unit Size:
Operational Duration (yrs): 13 (Boomer 1993)
Operating Efficiency: 60%
Radiation Level: Low
Temp: ~130 degrees Celsius
Pressure: 0.04 psig
pH/Acidity/Alkalinity: N/A
Energetic Reaction Potential: Low
Process Stability:
% Solids in Waste: 0.01%
Waste Form: Gas
% Organics in Waste: 0%
Flammability: Low

Mechanized Parts / Unit
High-level: 0
Low-level: 0
Cold: 0

Isolated Process Steps / Unit
High-level:
Low-level:
Cold:

Combined Installation Activities:

Combined Decontamination/ Decommissioning Disposal/Activities
Decontaminations:
Decommissioning & Disposal:

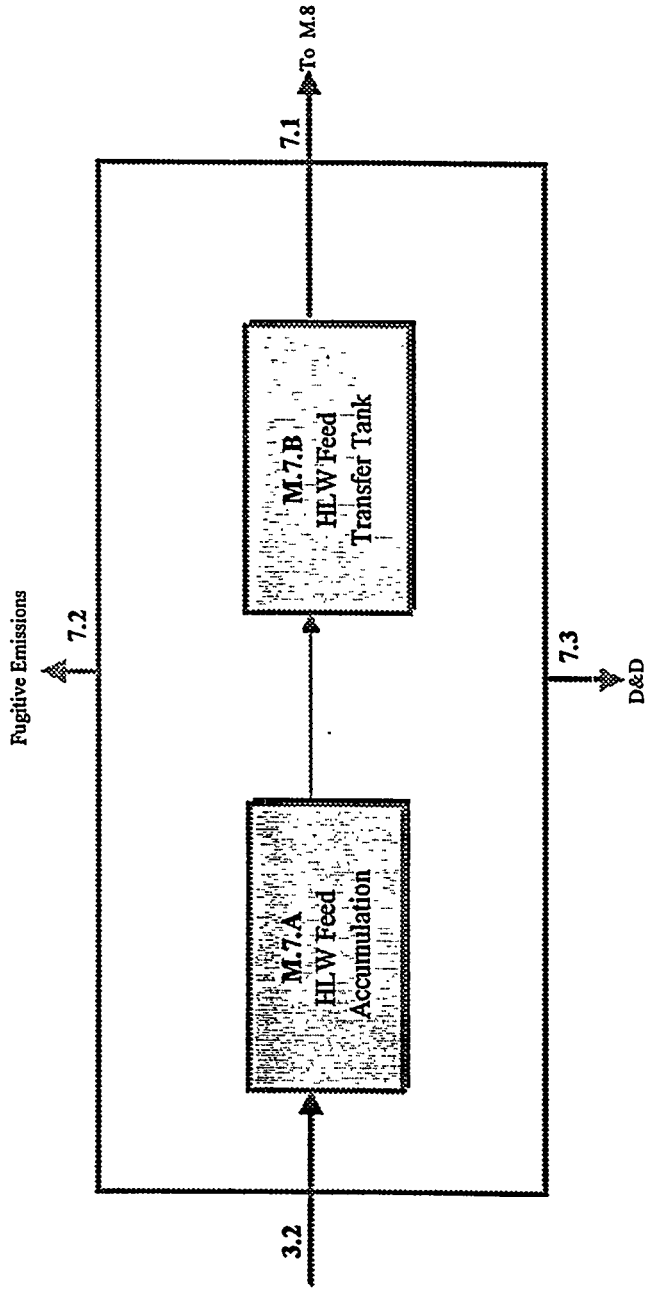

HLW Glass Feed Lag Storage Flow Sheet.

Module: M.7. HLW Glass Cullet Feed Lag Storage
Component / Unit Operation: M.7.A, HLW Feed Accumulation

General Description: This process receives HLW slurry waste from the Sludge Wash operation. This HLW is contained in a HLW Accumulation Tank until it is transferred to a HLW Feed Transfer Tank for further processing. The lag storage provides capacity when retrieval startup precedes separations or when retrieval rates exceed separation processing rates (Boomer 1993).

Number of Units: 1 accumulation tank, 2 pumps
Unit Size:
Operational Duration (yrs): 13 (Boomer 1993)
Operating Efficiency: 60%
Radiation Level: High
Temp: Ambient
Pressure: 0.04 psig
pH/Acidity/Alkalinity: 8 - 10
Energetic Reaction Potential: Very Low
Process Stability:
% Solids in Waste: 20%
Waste Form: Slurry
% Organics in Waste: 0.07%
Flammability: Low

Mechanized Parts / Unit
High-level: 2 pumps
Low-level: 0
Cold: 0

Isolated Process Steps / Unit
High-level:
Low-level:
Cold:

Combined Installation Activities: 2 pumps, piping

Combined Decontamination/ Decommissioning Disposal/Activities
Decontaminations:
Decommissioning & Disposal:

Module: M.7, HLW Glass Cullet Feed Lag Storage
Component / Unit Operation: M.7.B, HLW Feed Transfer Tank

General Description: This process receives waste from the HLW Feed Accumulation Tank. The waste is then pumped to a HLW Centrifuge System for further processing.

Number of Units: 1 transfer tank, 2 pumps
Unit Size: 56.8 m3 (feed transfer tank)
Operational Duration (yrs): 13 (Boomer 1993)
Operating Efficiency: 60%
Radiation Level: High
Temp: Ambient
Pressure: 0.04 psig
pH/Acidity/Alkalinity: 8 - 10
Energetic Reaction Potential: Very Low
Process Stability:
% Solids in Waste: 20%
Waste Form: Slurry
% Organics in Waste: 0.07%
Flammability: Low

Mechanized Parts / Unit
High-level: 2 pumps
Low-level: 0
Cold: 0

Isolated Process Steps / Unit
High-level:
Low-level:
Cold:

Combined Installation Activities:

Combined Decontamination/ Decommissioning Disposal/Activities
Decontaminations:
Decommissioning & Disposal:

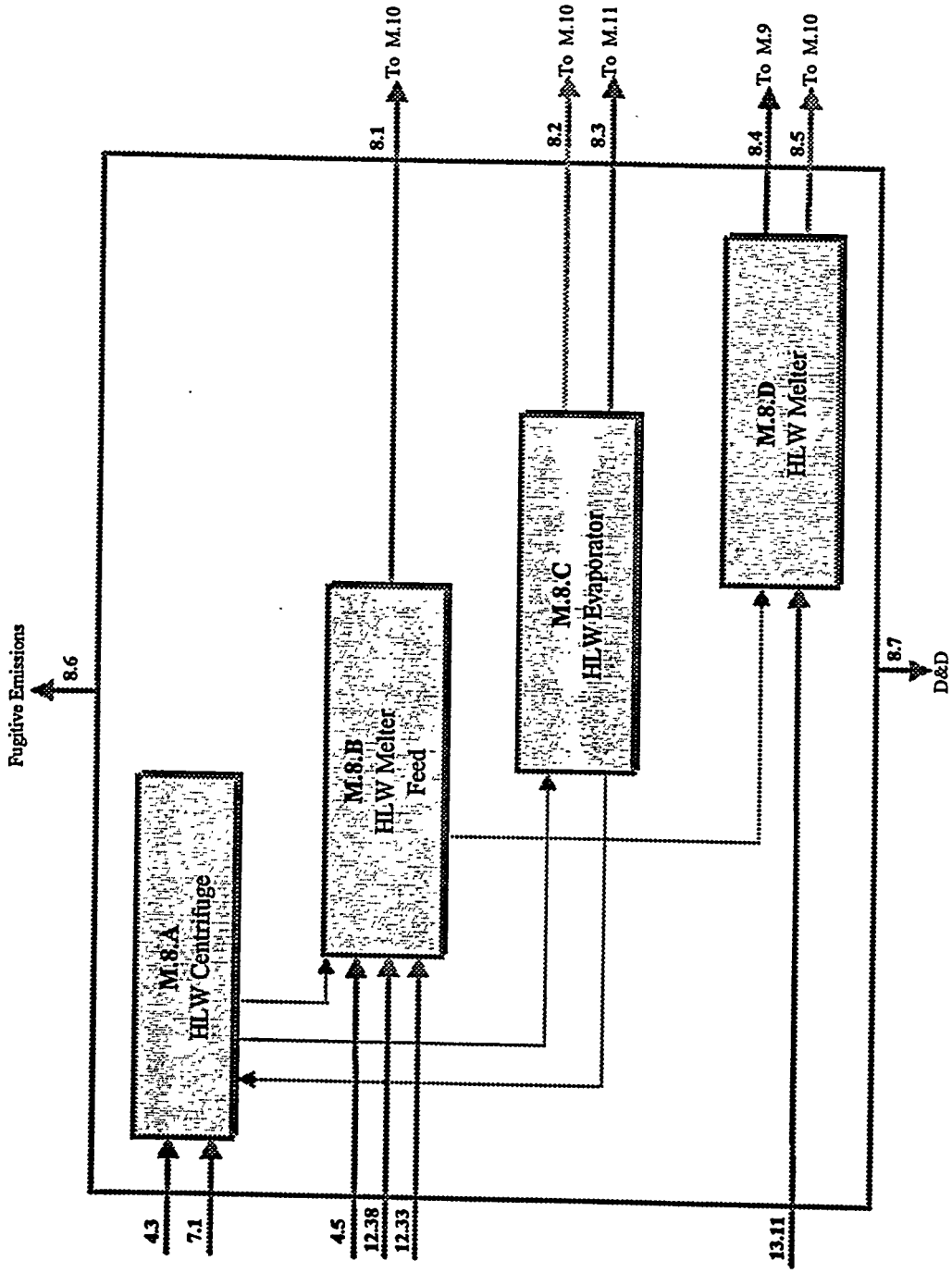

HLW Glass Logs Flow Sheet.

Module: M.8, HLW Glass Logs
Component / Unit Operation: M.8.A, HLW Centrifuge System

General Description: This process initially receives slurry waste from the HLW Feed Transfer Tank to Receipt/Sample Tanks. The slurry is then pumped to Centrifuge Feed Tanks for final processing before entering the centrifuge system. Centrate from the centrifuge is then pumped to HLW Evaporator Feed Tanks. The slurry from the Centrifuge Solids Catch Tank is pumped to HLW Melter Feed Adjustment Tanks.

Number of Units: 9 pumps, 6 receipt/sample tanks, 4 catch tanks, 2 feed tanks, 2 centrifuges
Unit Size: 56.8 m3 (feed tanks), 28.8 m3 (catch tanks)
Operational Duration (yrs): 13 (Boomer 1993)
Operating Efficiency: 60%
Radiation Level: High
Temp: Ambient
Pressure: - 0.04 psi
pH/Acidity/Alkalinity: 8 - 10
Energetic Reaction Potential: Very Low - Low
Process Stability:
% Solids in Waste: 0.1% (centrate), 23% (slurry)
Waste Form: Slurry
% Organics in Waste: 0% (centrate), 0.07% (slurry)
Flammability: Very Low - Low

Mechanized Parts / Unit
High-level: 9 pumps
Low-level: 0
Cold: 0

Isolated Process Steps / Unit
High-level:
Low-level:
Cold:

Combined Installation Activities: 9 pumps, piping

Combined Decontamination/ Decommissioning Disposal/Activities
Decontaminations:
Decommissioning & Disposal:

Module: M.8. HLW Glass Logs
Component / Unit Operation: M.8.B. HLW Melter Feed System

General Description: The HLW Melter Feed Collection Tanks receive slurries from the Centrifuge Solids Catch Tank, the Secondary Waste Evaporator Bottoms Recycle, and the Cs IX Concentration Catch Tank. The contents of the Feed Collection Tank are pumped to the Feed Sample and Accumulation Tanks and then are pumped on to the Feed Adjustment Reactors. Glycolic acid is added to the Feed Adjustment Reactor, and the Feed Adjustment Reactor has the capability to receive bulk glass formers from a weigh feeder equipped with a rotary feeder. Off gases from the Feed Adjustment Reactors are run through a condenser and both the condensate and the offgas are sent to the Cullet Rework and Vitrification Offgas Processing. The melter feed is pumped to the melter feed tank and then on to the HLW Melter.

Number of Units: 2 feed collection tanks, 6 feed sample and accumulation tanks, 3 feed adjustment reactors, 2 melter feed tanks, 1 glycolic acid tank, 1 weigh feeder, 1 head bin, 2 rotary star feeders, 1 condenser, 4 pumps.
Unit Size:
Operational Duration (yrs): 13 (Boomer 1993)
Operating Efficiency: 60%
Radiation Level: High
Temp: Ambient
Pressure: - 0.04 psi
pH/Acidity/Alkalinity: 8 - 12
Energetic Reaction Potential: Very Low - Moderately High
Process Stability:
% Solids in Waste: 100% (solid stream), 0% (vapor stream)
Waste Form: solid and vapor
% Organics in Waste: 0%
Flammability: Very Low - Moderately Low

Mechanized Parts / Unit
High-level: 4 pumps, 1 feeders
Low-level: 0
Cold: 0

Isolated Process Steps / Unit
High-level:
Low-level:
Cold:

Combined Installation Activities: 4 pumps and piping, bin and feeders

Combined Decontamination/ Decommissioning Disposal/Activities
Decontaminations:
Decommissioning & Disposal:

Module: M.8, HLW Glass Logs
Component / Unit Operation: M.8.C, HLW Evaporator

General Description: High level waste stream from the Centrate Catch Tank are contained in the HLW Evaporator Feed Tank. This stream is then pumped to the HLW evaporator where the water vapor is condensed and the HLW is transferred to a HLW Evaporator Catch Tank. The condensate is treated and the HLW portion is pumped back to the centrifuge for further treatment.

Number of Units: 2 pumps, 1 feed tank, 1 catch tank, 1 evaporator, 1 condenser
Unit Size: 204.4 m3 (feed tank), 204.4 m3 (catch tank)
Operational Duration (yrs): 13 (Boomer 1993)
Operating Efficiency: 60%
Radiation Level: High
Temp: Ambient - 110 degrees Celcius
Pressure: - 0.04 psi
pH/Acidity/Alkalinity: 8 - 10
Energetic Reaction Potential: Very Low - Low
Process Stability:
% Solids in Waste: 0%
Waste Form: Water vapor
% Organics in Waste: 0%
Flammability: Low - Moderately Low

Mechanized Parts / Unit
High-level: 2 pumps
Low-level: 0
Cold: 0

Isolated Process Steps / Unit
High-level:
Low-level:
Cold:

Combined Installation Activities:

Combined Decontamination/ Decommissioning Disposal/Activities
Decontaminations:
Decommissioning & Disposal:

Module: M.8, HLW Glass Logs
Component / Unit Operation: M.8.D, HLW Melter

General Description: The feed from the HLW Melter Feed Tank is introduced to the HLW Melter, along with oxygen, to produce HLW glass logs. The HLW glass is poured into canisters, while the offgases are processed in the Cullet Rework and Vitrification Offgas Process.

Number of Units: 1 HLW Melter
Unit Size:
Operational Duration (yrs): 13 (Boomer 1993)
Operating Efficiency: 60%
Radiation Level: High
Temp: 1300 degrees C
Pressure: - 0.04 psig
pH/Acidity/Alkalinity: 8 - 10
Energetic Reaction Potential: Very Low - Moderately Low
Process Stability:
% Solids in Waste: 98%
Waste Form: solid
% Organics in Waste: 0%
Flammability: Very Low - Low

Mechanized Parts / Unit
High-level: 0
Low-level: 0
Cold: 0

Isolated Process Steps / Unit
High-level:
Low-level:
Cold:

Combined Installation Activities: piping

Combined Decontamination/ Decommissioning Disposal/Activities
Decontaminations:
Decommissioning & Disposal:

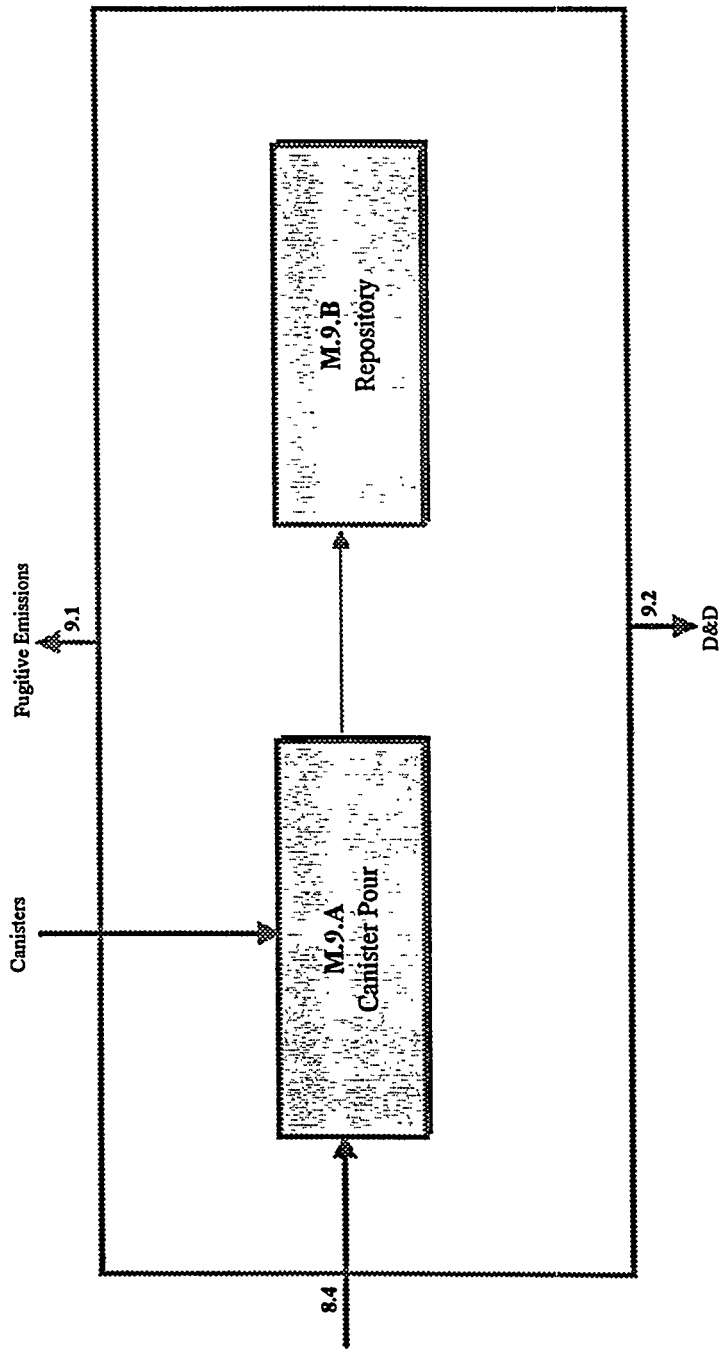

HLW Glass Canister System Flow Sheet.

Module: M.9, HLW Glass Canister System
Component / Unit Operation: M.9.A, HLW Glass Log Canisters

General Description: This unit is the HLW packaging and loadout line. The HLW Glass is poured into canisters which then are put through the following steps: Inner canister closure , canister decontamination, smear testing, final closure, and inspection. The canisters are then shipped to the repository.

Number of Units:
Unit Size:
Operational Duration (yrs): 13 (Boomer 1993)
Operating Efficiency: 60%
Radiation Level: High
Temp: 50 - 200 C
Pressure: 0.04 psi
pH/Acidity/Alkalinity: N/A
Energetic Reaction Potential: Very low
Process Stability: 100%
% Solids in Waste: Solid
% Organics in Waste: 0%
Flammability: Very low

Mechanized Parts / Unit
High-level: 0
Low-level: 0
Cold: 0

Isolated Process Steps / Unit
High-level:
Low-level:
Cold:

Combined Installation Activities:

Combined Decontamination/ Decommissioning Disposal/Activities
Decontaminations:
Decommissioning & Disposal:

Module: M.9, HLW Glass Canister System
Component / Unit Operation: M.9.B, Repository

General Description: This unit receives HLW glass, stored in canisters, from the canister fill station, and stores them.

Number of Units:
Unit Size:
Operational Duration (yrs): 13 (Boomer 1993)
Operating Efficiency: 60%
Radiation Level: High
Temp: 50 - 200 C
Pressure: - 0.04 psi
pH/Acidity/Alkalinity: N/A
Energetic Reaction Potential: Very low
Process Stability:
% Solids in Waste: 100%
Waste Form: Solid
% Organics in Waste: 0%
Flammability: Very low

Mechanized Parts / Unit
High-level:
Low-level:
Cold:

Isolated Process Steps / Unit
High-level:
Low-level:
Cold:

Combined Installation Activities:

Combined Decontamination/ Decommissioning Disposal/Activities
Decontaminations:
Decommissioning & Disposal:

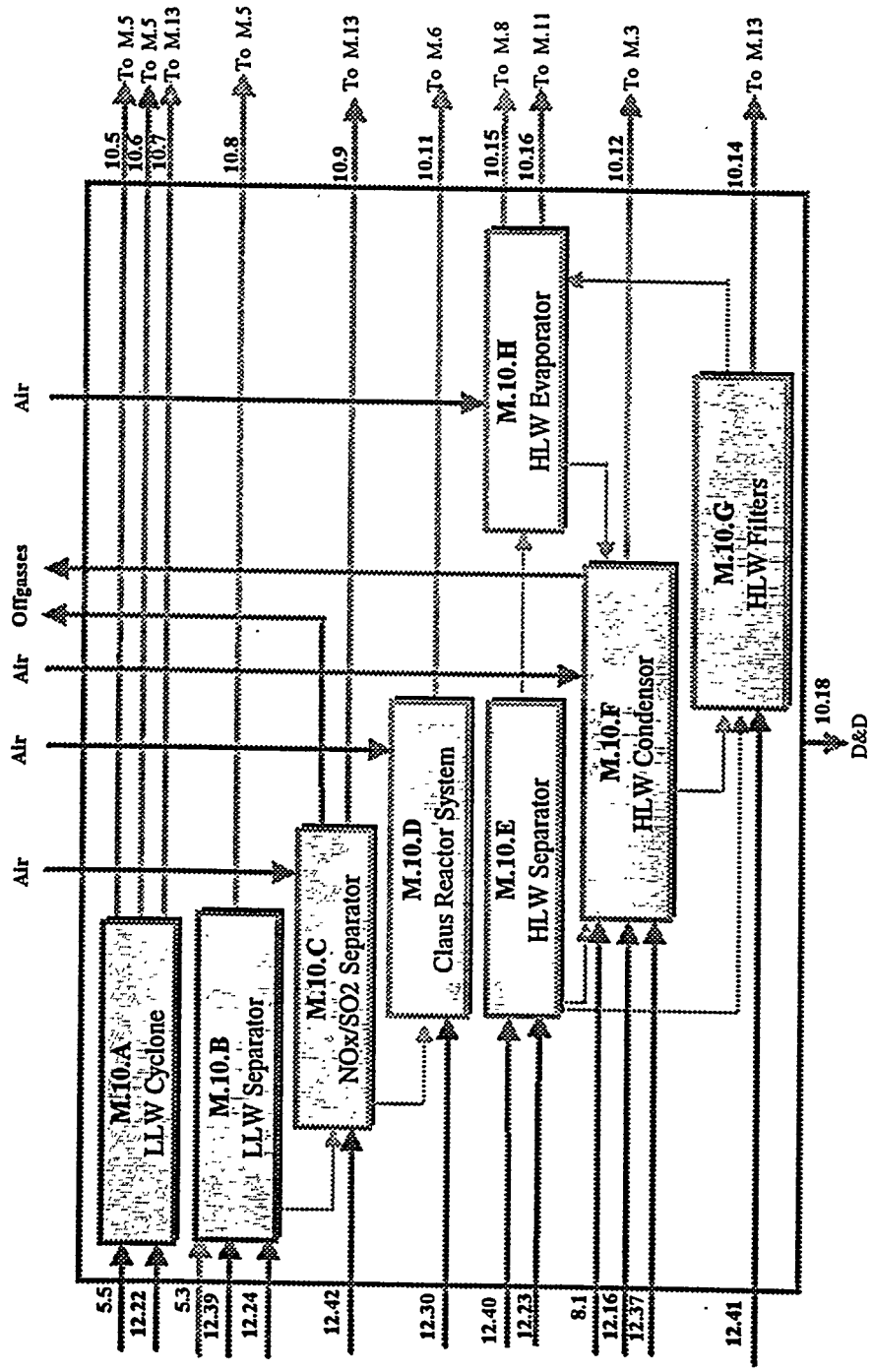

Cullet Rework and Vitrification Offgas Processing Flow Sheet.

Module: M.10, Cullet Rework and Vitrification Offgas Processing
Component / Unit Operation: M.10.A, Cyclone System

General Description: This system receives LLW glass cullet from lag storage and sends it through the cyclone with sintered metal filters. A Rotary Star Feeder sends the cullet through a roll crusher and into a Recycle Cullet Catch Tank. The LLW stream is then pumped to the LLW Melter Feed Adjustment Tank. The waste flows through a filter system consisting of two heaters, four metal HEPA filters and two blowers. A filter wash water stream flows through the filters and is collected in the filter wash catch tank before being pumped to the Filter Wash LLW Evaporator Feed Tank. The remaining waste flows to the PVOG Cell Ventilation Filtration and Exhaust system.

Number of Units: 4 metal HEPA filters, 2 heaters, 2 blowers, 2 catch tanks, 2 pumps, 1 cyclone, 1 Rotary Star Feeder, 1 roll crusher
Unit Size:
Operational Duration (yrs): 13 (Boomer 1993)
Operating Efficiency: 60%
Radiation Level: Low
Temp: ambient - 200 C
Pressure: -4 to +4 psig
pH/Acidity/Alkalinity: 8 - 10
Energetic Reaction Potential: Very low
Process Stability:
% Solids in Waste: 0% (PVOG stream), 1% (filter wash)
Waste Form: Liquid
% Organics in Waste: 0%
Flammability: Very Low - Low

Mechanized Parts / Unit
High-level: 0
Low-level: 1 pump, 1 feeder, 1 roll crusher, 2 blowers, 1 pump
Cold: 0

Isolated Process Steps / Unit
High-level:
Low-level:
Cold:

Combined Installation Activities:

Combined Decontamination/ Decommissioning Disposal/Activities
Decontaminations:
Decommissioning & Disposal:

Module: M.10, Cullet Rework and Vitrification Offgas Processing
Component / Unit Operation: M.10.B, LLW Separator

General Description The LLW quench tower receives a gas stream which is sprayed with LLW scrub solution from the LLW Scrub Solution Tank. The gas stream then is sent through the LLW Venturi Scrubber, while the scrub solution is sent back to the LLW Scrub Solution Tank. The Venturi Scrubber also uses LLW scrub solution that is pumped through a chiller. The waste stream from the LLW Venturi Scrubber is separated, with the gas stream sent through a chiller and LLW demister and the liquid sent back to the LLW Scrub Solution Tank. The LLW demister is fed from a separate wash water stream. Again, the liquid and gas streams are separated. The Scrub Solution Makeup Tank feeds the LLW Scrub Solution Tank. The LLW from the Scrub Solution Tank is pumped out and filtered, with the LLW scrub filter entering the LLW Scrub Filter Tank. The gas stream is sent through a filtration system including four metal HEPA filters. The gas flows to the next system and the filter wash slurry flows to the LLW Melter Filter Wash Catch Tank before being pumped to another system for evaporation.

Number of Units: 4 metal HEPA filters, 4 pumps, 2 heaters, 2 blowers, 2 solution tanks, 2 chillers, 1 LLW quench tower, 1 catch tank, 1 filter tank, 1 LLW Venturi Scrubber, 1 LLW separator, 1 LLW demister

Unit Size:
Operational Duration (yrs): 13 (Boomer 1993)
Operating Efficiency: 60%
Radiation Level: Low
Temp: 5 - 75 C
Pressure: - 0.04 psi
pH/Acidity/Alkalinity: 3 - 10
Energetic Reaction Potential: Very Low - Moderately Low
Process Stability:
% Solids in Waste: 0% (gas stream), 14% (slurry stream)
Waste Form: Gas, slurry, solid
% Organics in Waste: 0% (all streams)
Flammability: Very low

Mechanized Parts / Unit
High-level: 0
Low-level: 4 pumps, 2 blowers
Cold: 0

Isolated Process Steps / Unit
High-level:
Low-level:
Cold:

Combined Installation Activities:

Combined Decontamination/ Decommissioning Disposal/Activities
Decontaminations:
Decommissioning & Disposal:

Module: M.10, Cullet Rework and Vitrification Offgas Processing
Component / Unit Operation: M.10.C, NOx/SO2 Separator

General Description: The gas streams entering this unit are a stream from the LLW separator system and an oxygen stream. The stream passes through a melter offgas heat exchanger and splits into two streams. One stream flows through a heater and into an SO2 absorber (one of three CuO beds). Another gas stream exits the SO2 absorber, flows through another heater and enters the NOx catalytic reactor. The gas stream that exits this reactor flows back to the original heat exchanger. NH3 also enters the system, breaking into two streams. One of the streams flows into the NOx catalytic reactor and the other flows through the NH3 cracker. H2 is the resulting gas stream of the NH3 cracker and flows into the CuO bed for sulfate reduction. The sulfate reduced gas stream exits this CuO bed and is sent to the Claus Reactor System. The third CuO bed intakes air and regenerates SO2 absorber.

Number of Units: 3 CuO beds, 2 heaters, 1 heat exchanger, 1 catalytic reactor, 1 cracker
Unit Size:
Operational Duration (yrs): 13 (Boomer 1993)
Operating Efficiency: 60%
Radiation Level: Low (traces of nuclides exist)
Temp: 400 - 500 C
Pressure: 1 - 2 psig
pH/Acidity/Alkalinity: N/A
Energetic Reaction Potential: Moderately Low - Moderate
Process Stability:
% Solids in Waste: 0%
Waste Form: Gas
% Organics in Waste: 0%
Flammability: Very Low - Moderate

Mechanized Parts / Unit
High-level: 0
Low-level: 0
Cold: 0

Isolated Process Steps / Unit
High-level:
Low-level:
Cold:

Combined Installation Activities:

Combined Decontamination/ Decommissioning Disposal/Activities
Decontaminations:
Decommissioning & Disposal:

Module: M.10, Cullet Rework and Vitrification Offgas Processing
Component / Unit Operation: M.10.D, Claus Reactor System

General Description: This system receives air, fuel, and a gas stream from the NOx/SO2 separator into a combustion chamber at various entry points. The resulting stream flows through a heat exchanger and splits into two streams. One flows through another air heat exchanger and joins a gas stream entering one of two Claus Reactors. The gas stream may flow out of the system. The other gas stream flows into the second Claus reactor The gas exiting each of the two reactors flow through air heat exchangers for cooling. The first reactor gas stream either flows back into the original heat exchanger for further processing or out of the system. The gas stream from the second reactor either flows out of the system or flows through a sulfur trap. The stream from the sulfur trap flows out of the system.The resulting gas stream is sent to flare.

Number of Units: 3 air heat exchangers, 2 Claus Reactors, 1 combustion chamber, 1 heat exchanger, 1 sulphur trap

Unit Size:
Operational Duration (yrs): 13 (Boomer 1993)
Operating Efficiency: 60%
Radiation Level: Low (traces of nuclides exist)
Temp: 130 - 800 C
Pressure: 1 - 2 psig
pH/Acidity/Alkalinity: N/A
Energetic Reaction Potential: Low to Moderate
Process Stability:
% Solids in Waste: 0%
Waste Form: Gas
% Organics in Waste: 0%
Flammability: Low to Moderately Low

Mechanized Parts / Unit
High-level:
Low-level: 0
Cold: 0

Isolated Process Steps / Unit
High-level:
Low-level:
Cold:

Combined Installation Activities: piping

Combined Decontamination/ Decommissioning Disposal/Activities
Decontaminations:
Decommissioning & Disposal:

Module: M.10, Cullet Rework and Vitrification Offgas Processing
Component / Unit Operation: M.10.E, HLW Separator

General Description: The HLW Quench Tower receives a gas stream which is sprayed with HLW scrub solution from the HLW Scrub Solution Tank. The gas stream then is sent through the HLW Venturi Scrubber, while the scrub solution is sent back to the HLW Scrub Solution Tank. The Venturi Scrubber also uses HLW scrub solution that is pumped through a chiller. The waste stream from the HLW Venturi Scrubber is separated, with the gas stream sent through a chiller and HLW demister and the liquid sent back to the HLW Scrub Solution Tank. The HLW demister is fed from a separate wash water stream. Again, the liquid and gas streams are separated. The Scrub Solution Makeup Tank feeds the HLW Scrub Solution Tank and the LLW tank in the LLW system. The HLW from the Scrub Solution Tank is pumped out for further treatment. The gas stream is sent through two heaters, four metal HEPA filters, and two blowers. The gas flows to the next system and the filter wash flows to the HLW Melter Filter Wash Catch Tank before being pumped to another system for evaporation.

Number of Units:
4 metal HEPA filters, 3 pumps, 2 heaters, 2 blowers, 2 solution tanks, 2 chillers, 1 HLW quench tower, 1 catch tank, 1 HLW Venturi Scrubber, 1 HLW separator, 1 HLW demister
Unit Size:
Operational Duration (yrs): 13 (Boomer 1993)
Operating Efficiency: 60%
Radiation Level: High
Temp: 10 - 75 C
Pressure: - 0.04 psi
pH/Acidity/Alkalinity: <1 - 10
Energetic Reaction Potential: Very Low - Moderately Low
Process Stability:
% Solids in Waste: 0% (gas stream), 0.1% (liquid stream), 0.9% (filter wash)
Waste Form: Gas, liquid
% Organics in Waste: 0%
Flammability: Very low

Mechanized Parts / Unit
High-level: 3 pumps, 2 blowers, 1 scrubber
Low-level: 0
Cold: 0

Isolated Process Steps / Unit
High-level:
Low-level:
Cold:

Combined Installation Activities:

Combined Decontamination/ Decommissioning Disposal/Activities
Decontaminations:
Decommissioning & Disposal:

Module: M.10, Cullet Rework and Vitrification Offgas Processing
Component / Unit Operation: M.10.F, HLW Condenser

General Description: The HLW Condenser receives waste from the secondary waste evaporator, the HLW feed evaporator, and offgas from the HLW feed adjustment reactor condenser vent. Condensate is pumped to the salt waste adjustment tank, and the condenser offgas is scrubbed free of ammonia and then sent to the HLW Filter System. Condensate from the HLW feed adjustment reactor condenser enters the condensate collection tank where it is slit into two streams, one going to Hg accumulation and purification, the other going to the ammonia destruction reactor tank. Nitric acid and sodium nitrate are added to the ammonia destruction tank, and the waste is then pumped to the salt waste adjustment tank. Nitric acid and sodium nitrate are added to the salt waste adjustment tank and the waste is then pumped to the salt waste holding tank. This low level salt waste is then pumped to the wash solution accumulation tanks in the In Tank Sludge Wash Process.

Number of Units: 4 tanks, 1 HLW Offgas condenser, 2 condensers, 7 pumps.
Unit Size:
Operational Duration (yrs): 13 (Boomer 1993)
Operating Efficiency: 60%
Radiation Level: High
Temp: ambient - 75 C
Pressure: - 0.04 psi
pH/Acidity/Alkalinity: <1 - 10
Energetic Reaction Potential: Very Low - Moderately Low
Process Stability:
% Solids in Waste: 0% - 0.9%
Waste Form: Gas, liquid
% Organics in Waste: 0%
Flammability: Very low

Mechanized Parts / Unit
High-level: 7 pumps
Low-level: 0
Cold: 0

Isolated Process Steps / Unit
High-level:
Low-level:
Cold:

Combined Installation Activities:

Combined Decontamination/ Decommissioning Disposal/Activities
Decontaminations:
Decommissioning & Disposal:

Module: M.10, Cullet Rework and Vitrification Offgas Processing
Component / Unit Operation: M.10.G, HLW Filters

General Description: The HLW Filters receive gas from the HLW Separator and the HLW Condenser. After passing through a series of HEPA filter banks, the filtered gas is sent to the Air/Vapor Filtration System.

Number of Units: 8 HEPA banks, 4 heaters, 4 blowers, 1 filter wash catch tank.
Unit Size:
Operational Duration (yrs): 13 (Boomer 1993)
Operating Efficiency: 60%
Radiation Level: Low
Temp: ambient - 75 C
Pressure: - 0.04 psi
pH/Acidity/Alkalinity: <1 - 10
Energetic Reaction Potential: Very Low - Moderately Low
Process Stability:
% Solids in Waste: 0%
Waste Form: Gas
% Organics in Waste: 0%
Flammability: Very low

Mechanized Parts / Unit
High-level: 0
Low-level: 4 blowers
Cold: 0

Isolated Process Steps / Unit
High-level:
Low-level:
Cold:

Combined Installation Activities:

Combined Decontamination/ Decommissioning Disposal/Activities
Decontaminations:
Decommissioning & Disposal:

Module: M.10, Cullet Rework and Vitrification Offgas Processing
Component / Unit Operation: M.10.H, HLW Evaporator

General Description: The HLW Evaporator receives spent melter offgas scrub solution from the HLW Separator, and liquid from the canister decontamination wash. Sodium hydroxide is added to the waste. The offgas from the evaporator is run through a condenser and then on the HLW Condenser. The evaporator bottoms are recycled to the HLW Melter Feed Tank.

Number of Units: 1 Evaporator, 1 condenser, 1 pump.
Unit Size:
Operational Duration (yrs): 13 (Boomer 1993)
Operating Efficiency: 60%
Radiation Level: Low
Temp: ambient - 75 C
Pressure: -1.55 to -0.7 psig
pH/Acidity/Alkalinity: <1 - 10
Energetic Reaction Potential: Very Low - Moderately Low
Process Stability:
% Solids in Waste: 0% (gas stream), 0.9% (wash solutions)
Waste Form: Gas, liquid
% Organics in Waste: 0%
Flammability: Very low

Mechanized Parts / Unit
High-level: 0
Low-level: 1 pump
Cold: 0

Isolated Process Steps / Unit
High-level:
Low-level:
Cold:

Combined Installation Activities:

Combined Decontamination/ Decommissioning Disposal/Activities
Decontaminations:
Decommissioning & Disposal:

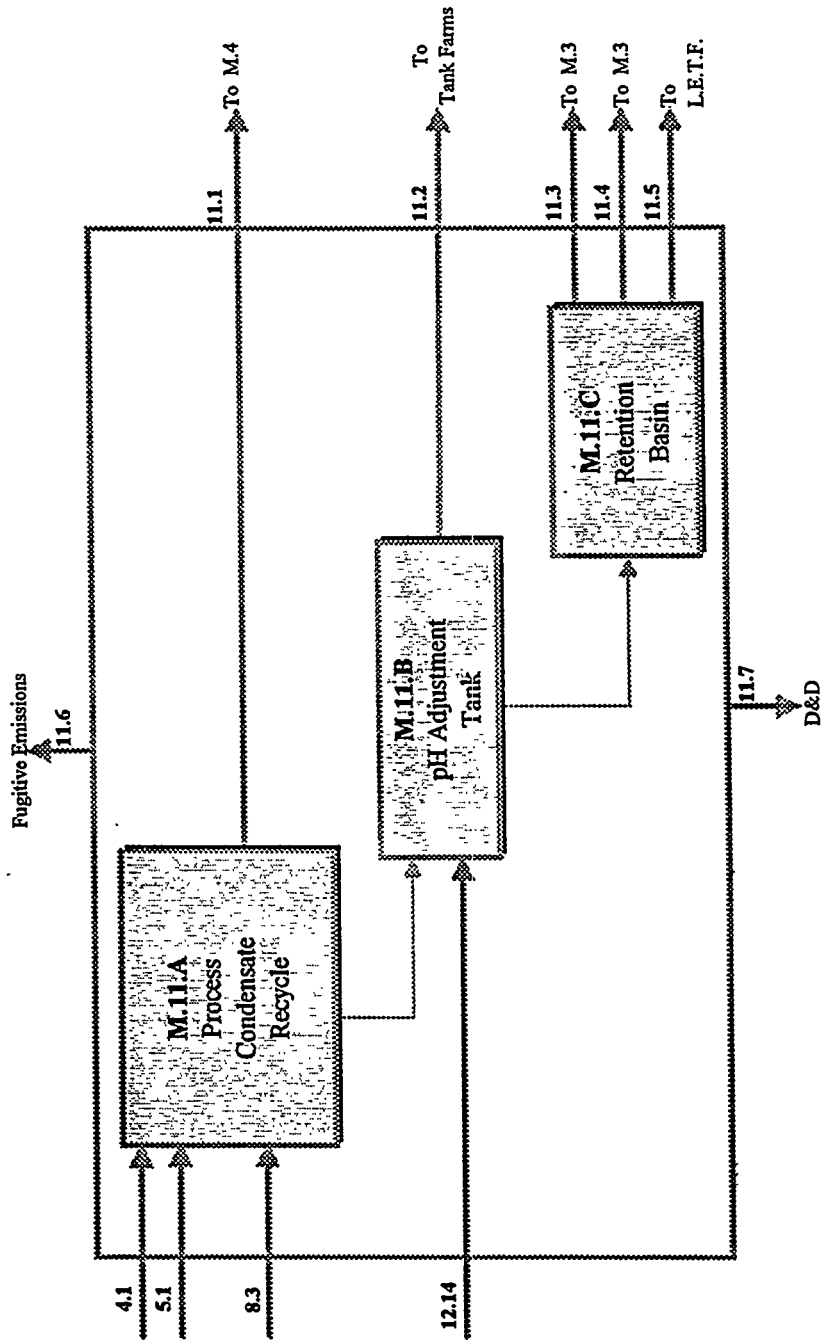

Liquid Effluent Treatment Flow Sheet.

Module: M.11, Liquid Effluent Treatment Facility
Component / Unit Operation: M.11.A. Process Condensate Recycle

General Description: The Process Condensate Recycle Tanks receive a combination stream made up of five streams: supernate evaporator, LLW feed evaporator, HLW feed evaporator, HLW cullet drying condensate, and LLW cullet drying condensate. The treatment process condensate and the recycled stream are pumped out of the tanks.

Number of Units: 3 recycle tanks, 2 pumps
Unit Size:
Operational Duration (yrs): 13 (Boomer 1993)
Operating Efficiency: 60%
Radiation Level: Low (traces of nuclides exist)
Temp: ambient - 40
Pressure: 0.04 psi
pH/Acidity/Alkalinity: 8 - 10
Energetic Reaction Potential: Very low
Process Stability:
% Solids in Waste: 0% (recycled stream), 0% (condensate stream)
Waste Form: Liquid
% Organics in Waste: 0% (recycled stream), 0% (condensate stream)
Flammability: Very low

Mechanized Parts / Unit
High-level: 0
Low-level: 0
Cold: 2 pumps

Isolated Process Steps / Unit
High-level:
Low-level:
Cold:

Combined Installation Activities: 2 pumps, piping

Combined Decontamination/ Decommissioning Disposal/Activities
Decontaminations:
Decommissioning & Disposal:

Module: M.11, Liquid Effluent Treatment Facility
Component / Unit Operation: M.11.B, pH Adjustment Tank

General Description: The treatment process condensate stream and bulk NaOH enter the pH Adjustment Tank for adjustmient. Two streams are then pumped out of the tank. One is off specification condensate going to the tank farms. The other enters the Retention Basin.

Number of Units: 2 pumps, 1 adjustment tank
Unit Size:
Operational Duration (yrs): 13 (Boomer 1993)
Operating Efficiency: 60%
Radiation Level: Low (traces of nuclides exist)
Temp: ambient
Pressure: 0.04 psi
pH/Acidity/Alkalinity: 8 - 10
Energetic Reaction Potential: Low
Process Stability:
% Solids in Waste: 0% (both streams)
Waste Form: Liquid (both streams)
% Organics in Waste: 0% (both streams)
Flammability: Very low

Mechanized Parts / Unit
High-level: 2 pumps
Low-level: 0
Cold: 0

Isolated Process Steps / Unit
High-level:
Low-level:
Cold:

Combined Installation Activities:

Combined Decontamination/ Decommissioning Disposal/Activities
Decontaminations:
Decommissioning & Disposal:

Module: M.11, Liquid Effluent Treatment Facility
Component / Unit Operation: M.11.C, Retention Basin

General Description: This unit consists of a retention basin for adjusted treatment process condensate.

Number of Units: 1 retention basin
Unit Size:
Operational Duration (yrs): 13 (Boomer 1993)
Operating Efficiency: 60%
Radiation Level: Low (traces of nuclides exist)
Temp: ambient
Pressure: 0.04 psi
pH/Acidity/Alkalinity: 8 - 10
Energetic Reaction Potential: Very low
Process Stability:
% Solids in Waste: 0%
Waste Form: Liquid
% Organics in Waste: 0%
Flammability: Very low

Mechanized Parts / Unit
High-level: 0
Low-level: 0
Cold: 0

Isolated Process Steps / Unit
High-level:
Low-level:
Cold:

Combined Installation Activities:

Combined Decontamination/ Decommissioning Disposal/Activities
Decontaminations:
Decommissioning & Disposal:

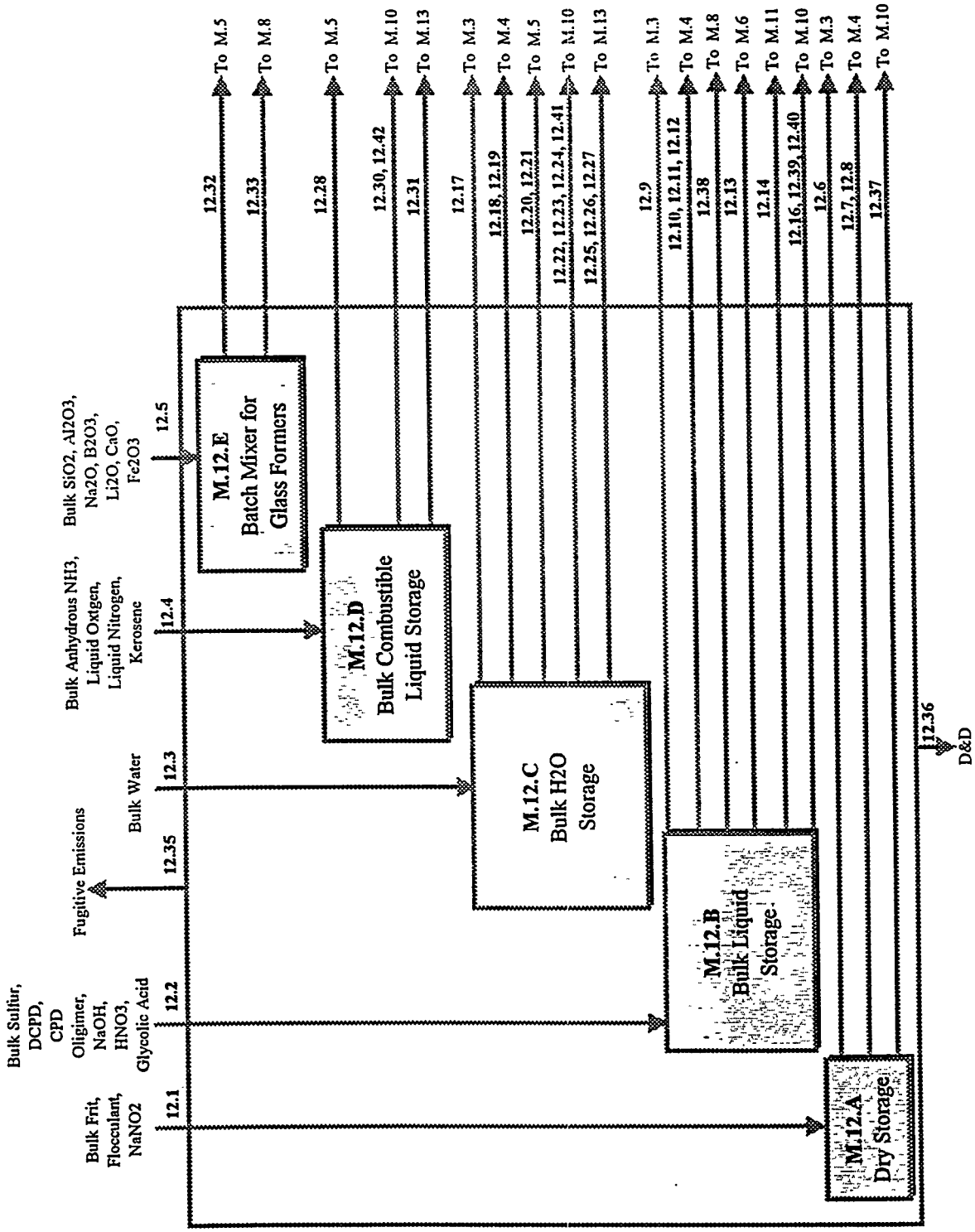

Chemical Make-up Flow Sheet.

Module: M.12, Chemical Make-up Unit
Component / Unit Operation: M.12.A, Dry Storage

General Description: This unit contains three separate dry storage areas with barrels containing bulk frit, bulk flocculent, and bulk NaNO2. From these areas the solids are sent to their appropriate tanks for use.

Number of Units: 3 storage areas
Unit Size:
Operational Duration (yrs): N/A
Operating Efficiency: 60%
Radiation Level: Cold
Temp: Ambient
Pressure: Ambient
pH/Acidity/Alkalinity: 7 - 8
Energetic Reaction Potential: Very Low
Process Stability:
% Solids in Waste: 100%
Waste Form: Solid
% Organics in Waste: 0%
Flammability: Very Low

Mechanized Parts / Unit
High-level: 0
Low-level: 0
Cold: 0

Isolated Process Steps / Unit
High-level: 0
Low-level: 0
Cold: 0

Combined Installation Activities: piping

Combined Decontamination/ Decommissioning Disposal/Activities
Decontaminations:
Decommissioning & Disposal:

Module: M.12, Chemical Make-up Unit
Component / Unit Operation: M.12.B, Bulk Liquid Storage

General Description: This unit is made up of six storage tanks containing bulk liquids to be used in various processes. The tanks are the Bulk Sulfur Storage Tank, the bulk DCPD Storage Tank, the Bulk CPD Oligomer Storage Tank, the Bulk NaOH Storage Tank, the Bulk HNO3 Storage Tank, and the Bulk Anhydrous NH3 Storage Tank.

Number of Units: 6 storage tanks, 6 pumps
Unit Size: 5.68 m3
Operational Duration (yrs): N/A
Operating Efficiency: 60%
Radiation Level: Cold
Temp: Ambient - 120 degrees C
Pressure: 0.04 - 120 psig
pH/Acidity/Alkalinity: <1 to >14
Energetic Reaction Potential: Low - Moderate
Process Stability:
% Solids in Waste: 0%
Waste Form: Liquid
% Organics in Waste: 0%
Flammability: Very Low - Moderately High

Mechanized Parts / Unit
High-level: 0
Low-level: 0
Cold: 6 pumps

Isolated Process Steps / Unit
High-level: 0
Low-level: 0
Cold: 0

Combined Installation Activities:

Combined Decontamination/ Decommissioning Disposal/Activities
Decontaminations:
Decommissioning & Disposal:

Module: M.12, Chemical Make-up Unit
Component / Unit Operation: M.12.C, Bulk H2O Storage

General Description: This unit contains one Bulk H2O Storage Tank filled by water from site services to be used in various processes.

Number of Units: 1 storage tank
Unit Size: 568 m3
Operational Duration (yrs): N/A
Operating Efficiency: 60%
Radiation Level: Cold
Temp: Ambient
Pressure: 0.04 psi
pH/Acidity/Alkalinity: Neutral
Energetic Reaction Potential: Very Low
Process Stability:
% Solids in Waste: 0%
Waste Form: Liquid
% Organics in Waste: 0%
Flammability: Very Low

Mechanized Parts / Unit
High-level: 0
Low-level: 0
Cold: 0

Isolated Process Steps / Unit
High-level: 0
Low-level: 0
Cold: 0

Combined Installation Activities:

Combined Decontamination/ Decommissioning Disposal/Activities
Decontaminations:
Decommissioning & Disposal:

Module: M.12, Chemical Make-up Unit
Component / Unit Operation: M.12.D, Bulk Combustible Liquid Storage

General Description: This unit is made up of three bulk liquid tanks containing O2, N2, and kerosene respectively. These liquids will be piped to various locations.

Number of Units: 3 storage tanks
Unit Size:
Operational Duration (yrs): N/A
Operating Efficiency: 60%
Radiation Level: Cold
Temp: Low - Ambient
Pressure: Ambient - High
pH/Acidity/Alkalinity: Neutral
Energetic Reaction Potential: Very Low - Moderate
Process Stability:
% Solids in Waste: 0%
Waste Form: Liquid
% Organics in Waste: 0%
Flammability: Very Low - Moderate

Mechanized Parts / Unit
High-level: 0
Low-level: 0
Cold: 0

Isolated Process Steps / Unit
High-level: 0
Low-level: 0
Cold: 0

Combined Installation Activities:

Combined Decontamination/ Decommissioning Disposal/Activities
Decontaminations:
Decommissioning & Disposal:

Module: M.12, Chemical Make-up Unit
Component / Unit Operation: M.12.E, Glass Melter Batch Mixers

General Description: This unit has seven storage bins containing sand, Al_2O_3, Na_2O_3, Na_2CO_3, B_2O_3, Li_2CO_3, CaO, and MgO respectively. Sand, Al_2O_3, B_2O_3, and CaO flow into one of two batch mixers and sand, Na_2CO_3, B_2O_3, Li_2CO_3, CaO, and MgO flow into the other.

Number of Units: 7 storage bins, 2 batch mixers
Unit Size:
Operational Duration (yrs): N/A
Operating Efficiency: 60%
Radiation Level: Cold
Temp: ambient
Pressure: ambient
pH/Acidity/Alkalinity: ~10 - 12
Energetic Reaction Potential: Very low
Process Stability:
% Solids in Waste: 100%
Waste Form: Solid
% Organics in Waste: 0%
Flammability: Very low

Mechanized Parts / Unit
High-level: 0
Low-level: 0
Cold: 2 batch mixers

Isolated Process Steps / Unit
High-level: 0
Low-level: 0
Cold: 0

Combined Installation Activities:

Combined Decontamination/ Decommissioning Disposal/Activities
Decontaminations:
Decommissioning & Disposal:

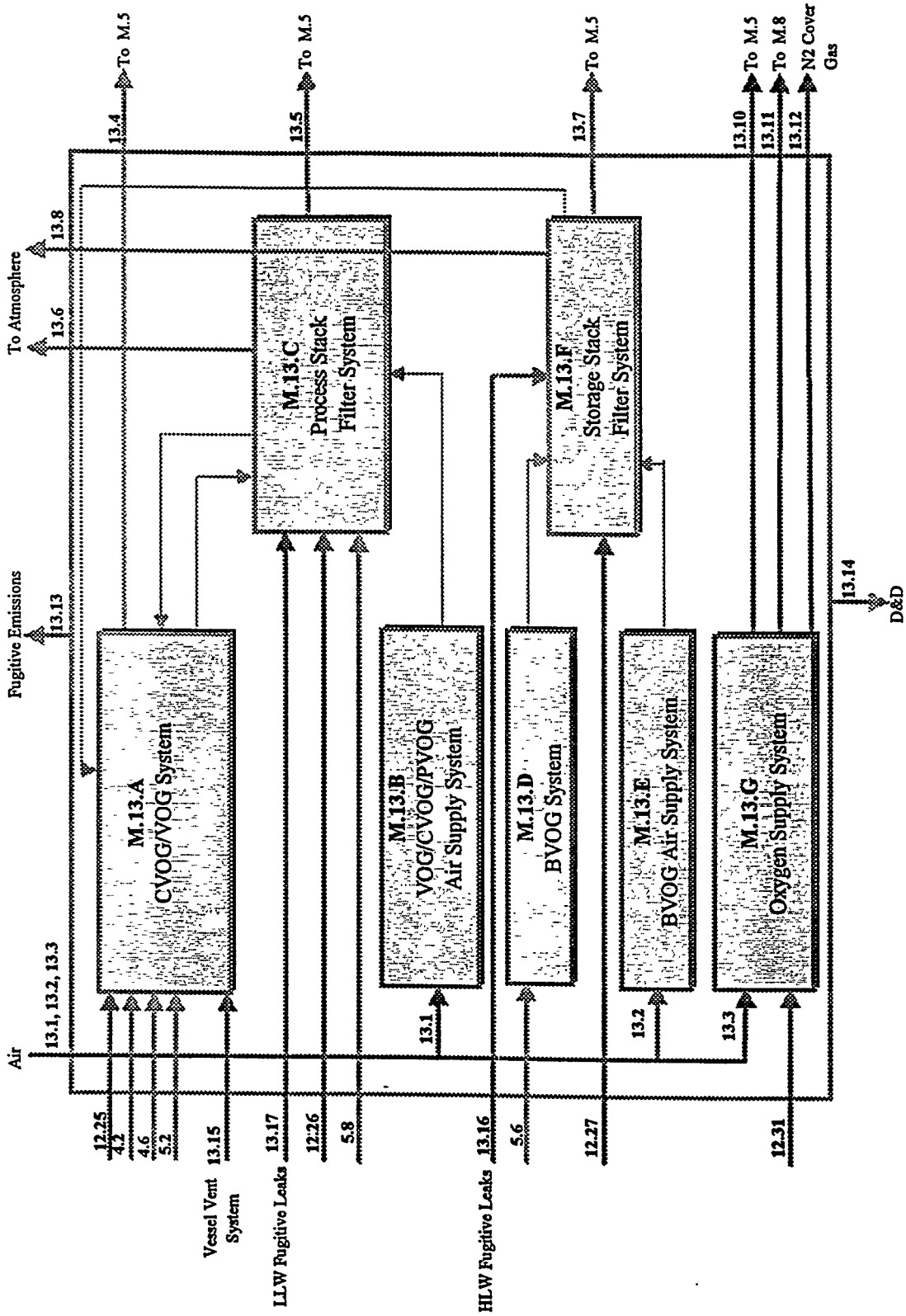

Air/Vapor Filtration System Flow Sheet.

Module: M.13, Air/Vapor Filtration System
Component / Unit Operation: M.13.A, CVOG/VOG System

General Description: This system filters CVOG and VOG using metal HEPA filters. The first stream received is a combination of streams from the supernate evaporator, first cycle Cs IX concentrator, LLW feed evaporator, and HLW feed evaporator. This stream is heated, filtered, and blown out to the Process Stack Filter system. The resulting filter wash flows into the CVOG/VOG Filter Wash Catch Tank before being pumped out of the system. The second filter system receives a stream from the Vessel Vent System. It also passes through heaters, metal HEPA filters, and blowers before exiting. The filter wash from this process flows to the catch tank.

Number of Units: 8 metal HEPA filters, 4 heaters, 4 blowers, 1 catch tank, 1 pump
Unit Size:
Operational Duration (yrs): 13 (Boomer 1993)
Operating Efficiency: 60%
Radiation Level: Low
Temp: ambient
Pressure: 0.04 psi
pH/Acidity/Alkalinity: 8 - 10
Energetic Reaction Potential: Very low
Process Stability:
% Solids in Waste: 0%
Waste Form: Gas
% Organics in Waste: 0%
Flammability: Very low

Mechanized Parts / Unit
High-level: 4 blowers
Low-level: 1 pump
Cold: 0

Isolated Process Steps / Unit
High-level: 0
Low-level: 0
Cold: 0

Combined Installation Activities: 1 pump, piping

Combined Decontamination/ Decommissioning Disposal/Activities
Decontaminations:
Decommissioning & Disposal:

Module: M.13, Air/Vapor Filtration System
Component / Unit Operation: M.13.B, VOG/CVOG/PVOG Air Supply System

General Description: Supply air is blown through two prefilters, two heaters, four HEPA filters, and a process cell. The air is filtered for use in the Process Stack Filter System.

Number of Units: 4 HEPA filters, 2 prefilters, 2 blowers, 2 heaters
Unit Size:
Operational Duration (yrs): N/A
Operating Efficiency: 60%
Radiation Level: Cold
Temp: 25 - 35 degrees C
Pressure: <1 psig
pH/Acidity/Alkalinity: NA
Energetic Reaction Potential: Very low
Process Stability:
% Solids in Waste: 0%
Waste Form: Gas
% Organics in Waste: 0%
Flammability: Very low

Mechanized Parts / Unit
High-level: 0
Low-level: 0
Cold: 2 blowers, 2 heaters

Isolated Process Steps / Unit
High-level:
Low-level:
Cold:

Combined Installation Activities: piping

Combined Decontamination/ Decommissioning Disposal/Activities
Decontaminations:
Decommissioning & Disposal:

Module: M.13. Air/Vapor Filtration System
Component / Unit Operation: M.13.C, Process Stack Filter System

General Description: A fugitive leak stream and filtered supply air combine and flow through metal prefilters and heaters before being joined by PVOG/VOG streams. The combined stream flows through metal HEPA filters and HEPA filters and is blown to the process facility stack for processing. The filter wash from the filters flows to the Filter Wash Catch Tank.

Number of Units: 2 metal prefilters, 2 metal HEPA filters, 2 HEPA filters, 2 heaters, 2 blowers, 1 catch tank, 1 process facility stack, 1 pump
Unit Size:
Operational Duration (yrs): 13 (Boomer 1993)
Operating Efficiency: 60%
Radiation Level: Low
Temp: ambient
Pressure: 0.04 psig
pH/Acidity/Alkalinity: 8 - 10
Energetic Reaction Potential: Very low
Process Stability:
% Solids in Waste: 1%
Waste Form: Liquid
% Organics in Waste: 0%
Flammability: Very low

Mechanized Parts / Unit
High-level: 2 blowers, 1 pump
Low-level: 0
Cold: 0

Isolated Process Steps / Unit
High-level:
Low-level:
Cold:

Combined Installation Activities:

Combined Decontamination/ Decommissioning Disposal/Activities
Decontaminations:
Decommissioning & Disposal:

Module: M.13, Air/Vapor Filtration System
Component / Unit Operation: M.13.D, BVOG System

General Description: One gas stream from HLW and LLW storage bin vents enters this filtration system. The stream passes through two heaters, four metal HEPA filters, and two blowers before entering the Storage Stack System.

Number of Units: 4 metal HEPA filters, 2 heaters, 2 blowers
Unit Size:
Operational Duration (yrs): 13 (Boomer 1993)
Operating Efficiency: 60%
Radiation Level: High
Temp: 25 - 35 degrees C
Pressure: 0.04 psig
pH/Acidity/Alkalinity: NA
Energetic Reaction Potential: Very low
Process Stability:
% Solids in Waste: 0.02%
Waste Form: Gas
% Organics in Waste: 0%
Flammability: Very low

Mechanized Parts / Unit
High-level: 2 blowers
Low-level: 0
Cold: 0

Isolated Process Steps / Unit
High-level:
Low-level:
Cold:

Combined Installation Activities:

Combined Decontamination/ Decommissioning Disposal/Activities
Decontaminations:
Decommissioning & Disposal:

Module: M.13, Air/Vapor Filtration System
Component / Unit Operation: M.13.E, BVOG Air Supply System

General Description: Supply air is blown through two prefilters, two heaters, four HEPA filters and the storage bin vault. The air is filtered for use in the Storage Stack System.

Number of Units: 4 HEPA filters, 2 prefilters, 2 blowers, 2 heaters
Unit Size:
Operational Duration (yrs): N/A
Operating Efficiency: 60%
Radiation Level: Cold
Temp: 25 - 35 degrees C
Pressure: <1 psig
pH/Acidity/Alkalinity: NA
Energetic Reaction Potential: Very low
Process Stability:
% Solids in Waste: 0%
Waste Form: Gas
% Organics in Waste: 0%
Flammability: Very low

Mechanized Parts / Unit
High-level: 0
Low-level: 0
Cold: 2 blowers

Isolated Process Steps / Unit
High-level:
Low-level:
Cold:

Combined Installation Activities: piping

Combined Decontamination/ Decommissioning Disposal/Activities
Decontaminations:
Decommissioning & Disposal:

Module: M.13, Air/Vapor Filtration System
Component / Unit Operation: M.13.F, Storage Stack Filter System

General Description: A fugitive leak stream and filtered supply air combine and flow through metal prefilters and heaters before being joined by the BVOG stream.. The combined stream then flows through metal HEPA filters and HEPA filters before being blown to the cullet storage facility stack. The filter wash from the filters flows to the Filter Wash Catch Tank.

Number of Units: 2 metal prefilters, 2 metal HEPA filters, 2 HEPA filters, 2 heaters, 2 blowers, 1 catch tank, 1 cullet storage facility stack
Unit Size:
Operational Duration (yrs): 13 (Boomer 1993)
Operating Efficiency: 60%
Radiation Level: Low
Temp: ambient
Pressure: 0.04 psig
pH/Acidity/Alkalinity: 8 - 10
Energetic Reaction Potential: Very low
Process Stability:
% Solids in Waste: 1%
Waste Form: Liquid
% Organics in Waste: 0%
Flammability: Very low

Mechanized Parts / Unit
High-level: 2 blowers
Low-level: 0
Cold: 0

Isolated Process Steps / Unit
High-level:
Low-level:
Cold:

Combined Installation Activities:

Combined Decontamination/ Decommissioning Disposal/Activities
Decontaminations:
Decommissioning & Disposal:

Module: M.13, Air/Vapor Filtration System
Component / Unit Operation: M.13.G, Oxygen Supply System

General Description: An air stream enters a compressor and is forced through a filter. The air then passes through a dryer and into an air receiver before flowing into one of two CMS beds for separation. The appropriate streams flow into the N2 supply or the O2 supply. Bulk N2 and bulk O2 are added to their respective streams before flowing to their destination for further use.

Number of Units: 2 air receiver tanks, 2 supply tanks, 1 air compressor, 1 filter, 1 dryer
Unit Size:
Operational Duration (yrs): N/A
Operating Efficiency: 60%
Radiation Level: Cold
Temp: ambient
Pressure: 125 psig
pH/Acidity/Alkalinity: NA
Energetic Reaction Potential: Low
Process Stability:
% Solids in Waste: 0%
Waste Form: Liquid
% Organics in Waste: 0%
Flammability: Very low

Mechanized Parts / Unit
High-level: 0
Low-level: 0
Cold: 1 air compressor

Isolated Process Steps / Unit
High-level:
Low-level:
Cold:

Combined Installation Activities: piping

Combined Decontamination/ Decommissioning Disposal/Activities
Decontaminations:
Decommissioning & Disposal:

This page intentionally left blank.

APPENDIX B

RESOURCE DISTRIBUTION WORKSHEETS

This page intentionally left blank.

TABLE OF CONTENTS

Appendix B-1: Operations Cost and FTE Resources B1-i
Appendix B-2: Baseline Alternative Cost and FTE Resources B2-i
Appendix B-3: Alternative 1 Cost and FTE Resources B3-i
Appendix B-4: Alternative 2 Cost and FTE Resources B4-i
Appendix B-5: Alternative 3 Cost and FTE Resources B5-i

This page intentionally left blank.

APPENDIX B-1: OPERATIONS COST AND FTE RESOURCES

This page intentionally left blank.

FUNCTION - RETRIEVAL	FY95	FY96	FY97	FY98	FY99
Retrieval Total Costs ($)	**61,678,400**	**59,824,972**	**60,551,672**	**1,184,498,432**	**70,302,936**
Technology Development (Test) Cost	11,184,609	22,300,346	8,897,309	133,615	0
Retrieve SY-101, SY-103	0	0	0	0	816,894
Perform Arm-based SST WR Demo C-106	0	0	0	0	0
Project W-151	11,728,347	979,456	1,111,604	257,366	0
Project W-211	5,847,000	14,913,124	26,519,114	7,227,763	0
Perform sluicing WR Demo C-106	0	0	0	7,715,732	1,936,618
Project W-340	4,000,000	8,440,000	17,431,076	168,924	0
Subtotal Test Costs	32,759,956	46,632,926	53,959,103	15,503,400	2,753,512
Test Oversight Costs	3,275,996	4,663,293	5,395,910	1,550,340	275,351
Total Test Costs	**36,035,952**	**51,296,219**	**59,355,013**	**17,053,740**	**3,028,863**
D/C SST WR System (Backout)				1,082,002,944	
D/C SST WR System (FY B/O)				60,111,275	60,111,275
Retrieval Operate Costs ($)	**25,642,448**	**8,528,753**	**1,196,659**	**145,553,023**	**127,385,348**

RETRIEVAL ACTIVITY COST BREAKDOWN	FY95	FY96	FY97	FY98	FY99
Activity % of Retrieval Actual Costs (%)					
Studies/Permitting	100	100	100	0	0
Design	0	0	0	100	100
Construction/D&D	0	0	0	0	0
Operation	0	0	0	0	0
Total Percentage	**100**	**100**	**100**	**100**	**100**
Retrieval Activity Costs($)					
Studies/Permitting	25,642,448	8,528,753	1,196,659	0	0
Design	0	0	0	145,553,023	127,385,348
Construction/D&D	0	0	0	0	0
Operation	0	0	0	0	0
Total Cost	**25,642,448**	**8,528,753**	**1,196,659**	**145,553,023**	**127,385,348**

RETRIEVAL FTE BREAKDOWN	FY95	FY96	FY97	FY98	FY99
Contractor FTE per Retrieval Activity (FTE)					
STUDIES/PERMITTING - Site Management/Operations	147.9	49.2	6.9	0.0	0.0
STUDIES/PERMITTING - Site Infrastructure	26.1	8.7	1.2	0.0	0.0
STUDIES/PERMITTING - National Laboratories	6.9	2.3	0.3	0.0	0.0
STUDIES/PERMITTING - Site Constructors	0.0	0.0	0.0	0.0	0.0
STUDIES/PERMITTING - Architecture/Engineering Contract	0.0	0.0	0.0	0.0	0.0
STUDIES/PERMITTING - Construction Contractor	0.0	0.0	0.0	0.0	0.0
DESIGN - Site Management/Operations	0.0	0.0	0.0	176.7	154.7
DESIGN - Site Infrastructure	0.0	0.0	0.0	31.2	27.3
DESIGN - National Laboratories	0.0	0.0	0.0	0.0	0.0
DESIGN - Site Constructors	0.0	0.0	0.0	52.0	45.5
DESIGN - Architecture/Engineering Contractors	0.0	0.0	0.0	606.5	530.8
DESIGN - Construction Contractor	0.0	0.0	0.0	0.0	0.0
CONSTRUCTION/D&D - Site Management/Operations	0.0	0.0	0.0	0.0	0.0
CONSTRUCTION/D&D - Site Infrastructure	0.0	0.0	0.0	0.0	0.0
CONSTRUCTION/D&D - National Laboratories	0.0	0.0	0.0	0.0	0.0
CONSTRUCTION/D&D - Site Constructors	0.0	0.0	0.0	0.0	0.0
CONSTRUCTION/D&D - Architecture/Engineering Contracto	0.0	0.0	0.0	0.0	0.0
CONSTRUCTION/D&D - Construction Contractor	0.0	0.0	0.0	0.0	0.0
OPERATIONS - Site Management/Operations	0.0	0.0	0.0	0.0	0.0
OPERATIONS - Site Infrastructure	0.0	0.0	0.0	0.0	0.0
OPERATIONS - National Laboratories	0.0	0.0	0.0	0.0	0.0
OPERATIONS - Site Constructors	0.0	0.0	0.0	0.0	0.0
OPERATIONS - Architecture/Engineering Contractors	0.0	0.0	0.0	0.0	0.0
OPERATIONS - Construction Contractor	0.0	0.0	0.0	0.0	0.0

Worker Category FTE (FTE)	FY95	FY96	FY97	FY98	FY99
Engineer/Management	154.8	51.5	7.2	835.2	730.9
Crafts	0.0	0.0	0.0	0.0	0.0
Maintenance	0.0	0.0	0.0	0.0	0.0
Operators	0.0	0.0	0.0	0.0	0.0
Infrastructure	26.1	8.7	1.2	31.2	27.3
Total	**180.9**	**60.2**	**8.4**	**866.4**	**758.2**

FUNCTION - RETRIEVAL	FY00	FY01	FY02	FY03	FY04
Retrieval Total Costs ($)	**61,420,712**	**76,337,600**	**98,323,264**	**108,581,376**	**127,796,752**
Technology Development (Test) Cost	0	0	0	0	0
Retrieve SY-101, SY-103	1,277,706	457,321	0	0	0
Perform Arm-based SST WR Demo C-106	0	0	1,760,159	9,588,926	656,776
Project W-151	0	0	0	0	0
Project W-211	0	0	0	0	0
Perform sluicing WR Demo C-106	0	0	0	0	0
Project W-340	0	0	0	0	0
Subtotal Test Costs	1,277,706	457,321	1,760,159	9,588,926	656,776
Test Oversight Costs	127,771	45,732	176,016	958,893	65,678
Total Test Costs	**1,405,477**	**503,053**	**1,936,175**	**10,547,819**	**722,454**
D/C SST WR System (Backout)					
D/C SST WR System (FY B/O)	60,111,275	60,111,275	60,111,275	60,111,275	60,111,275
Retrieval Operate Costs ($)	**120,126,510**	**135,945,822**	**156,498,364**	**158,144,832**	**187,185,573**

RETRIEVAL ACTIVITY COST BREAKDOWN	FY00	FY01	FY02	FY03	FY04
Activity % of Retrieval Actual Costs (%)					
Studies/Permitting	0	0	0	0	0
Design	100	70	50	20	10
Construction/D&D	0	30	40	40	30
Operation	0	0	10	40	60
Total Percentage	**100**	**100**	**100**	**100**	**100**
Retrieval Activity Costs($)					
Studies/Permitting	0	0	0	0	0
Design	120,126,510	95,162,075	78,249,182	31,628,966	18,718,557
Construction/D&D	0	40,783,747	62,599,346	63,257,933	56,155,672
Operation	0	0	15,649,836	63,257,933	112,311,344
Total Cost	**120,126,510**	**135,945,822**	**156,498,364**	**158,144,832**	**187,185,573**

RETRIEVAL FTE BREAKDOWN	FY00	FY01	FY02	FY03	FY04
Contractor FTE per Retrieval Activity (FTE)					
STUDIES/PERMITTING - Site Management/Operations	0.0	0.0	0.0	0.0	0.0
STUDIES/PERMITTING - Site Infrastructure	0.0	0.0	0.0	0.0	0.0
STUDIES/PERMITTING - National Laboratories	0.0	0.0	0.0	0.0	0.0
STUDIES/PERMITTING - Site Constructors	0.0	0.0	0.0	0.0	0.0
STUDIES/PERMITTING - Architecture/Engineering Contract	0.0	0.0	0.0	0.0	0.0
STUDIES/PERMITTING - Construction Contractor	0.0	0.0	0.0	0.0	0.0
DESIGN - Site Management/Operations	145.9	115.6	95.0	38.4	22.7
DESIGN - Site Infrastructure	25.7	20.4	16.8	6.8	4.0
DESIGN - National Laboratories	0.0	0.0	0.0	0.0	0.0
DESIGN - Site Constructors	42.9	34.0	27.9	11.3	6.7
DESIGN - Architecture/Engineering Contractors	500.5	396.5	326.0	131.8	78.0
DESIGN - Construction Contractor	0.0	0.0	0.0	0.0	0.0
CONSTRUCTION/D&D - Site Management/Operations	0.0	24.8	38.0	38.4	34.1
CONSTRUCTION/D&D - Site Infrastructure	0.0	4.4	6.7	6.8	6.0
CONSTRUCTION/D&D - National Laboratories	0.0	0.0	0.0	0.0	0.0
CONSTRUCTION/D&D - Site Constructors	0.0	14.6	22.4	22.6	20.1
CONSTRUCTION/D&D - Architecture/Engineering Contracto	0.0	11.3	17.4	17.6	15.6
CONSTRUCTION/D&D - Construction Contractor	0.0	239.9	368.2	372.1	330.3
OPERATIONS - Site Management/Operations	0.0	0.0	76.0	307.3	545.5
OPERATIONS - Site Infrastructure	0.0	0.0	13.4	54.2	96.3
OPERATIONS - National Laboratories	0.0	0.0	0.0	0.0	0.0
OPERATIONS - Site Constructors	0.0	0.0	0.0	0.0	0.0
OPERATIONS - Architecture/Engineering Contractors	0.0	0.0	0.0	0.0	0.0
OPERATIONS - Construction Contractor	0.0	0.0	0.0	0.0	0.0

Worker Category FTE (FTE)	FY00	FY01	FY02	FY03	FY04
Engineer/Management	689.3	641.8	611.1	391.4	348.3
Crafts	0.0	194.8	299.1	302.2	268.3
Maintenance	0.0	0.0	22.8	92.2	163.7
Operators	0.0	0.0	38.0	153.6	272.8
Infrastructure	25.7	24.8	36.9	67.8	106.3
Total	**715.0**	**861.4**	**1,007.9**	**1,007.2**	**1,159.3**

FUNCTION - RETRIEVAL	FY05	FY06	FY07	FY08	FY09
Retrieval Total Costs ($)	126,579,696	126,203,776	115,650,952	111,612,592	153,122,080
Technology Development (Test) Cost	0	0	0	0	0
Retrieve SY-101, SY-103	0	0	0	0	0
Perform Arm-based SST WR Demo C-106	0	0	0	0	0
Project W-151	0	0	0	0	0
Project W-211	0	0	0	0	0
Perform sluicing WR Demo C-106	0	0	0	0	0
Project W-340	0	0	0	0	0
Subtotal Test Costs	0	0	0	0	0
Test Oversight Costs	0	0	0	0	0
Total Test Costs	0	0	0	0	0
D/C SST WR System (Backout)					
D/C SST WR System (FY B/O)	60,111,275	60,111,275	60,111,275	60,111,275	60,111,275
Retrieval Operate Costs ($)	186,690,971	186,315,051	175,762,227	171,723,867	213,233,355

RETRIEVAL ACTIVITY COST BREAKDOWN	FY05	FY06	FY07	FY08	FY09
Activity % of Retrieval Actual Costs (%)					
Studies/Permitting	0	0	0	0	0
Design	10	10	10	10	10
Construction/D&D	30	30	30	30	30
Operation	60	60	60	60	60
Total Percentage	100	100	100	100	100
Retrieval Activity Costs($)					
Studies/Permitting	0	0	0	0	0
Design	18,669,097	18,631,505	17,576,223	17,172,387	21,323,336
Construction/D&D	56,007,291	55,894,515	52,728,668	51,517,160	63,970,007
Operation	112,014,583	111,789,031	105,457,336	103,034,320	127,940,013
Total Cost	186,690,971	186,315,051	175,762,227	171,723,867	213,233,355

RETRIEVAL FTE BREAKDOWN	FY05	FY06	FY07	FY08	FY09
Contractor FTE per Retrieval Activity (FTE)					
STUDIES/PERMITTING - Site Management/Operations	0.0	0.0	0.0	0.0	0.0
STUDIES/PERMITTING - Site Infrastructure	0.0	0.0	0.0	0.0	0.0
STUDIES/PERMITTING - National Laboratories	0.0	0.0	0.0	0.0	0.0
STUDIES/PERMITTING - Site Constructors	0.0	0.0	0.0	0.0	0.0
STUDIES/PERMITTING - Architecture/Engineering Contract	0.0	0.0	0.0	0.0	0.0
STUDIES/PERMITTING - Construction Contractor	0.0	0.0	0.0	0.0	0.0
DESIGN - Site Management/Operations	22.7	22.6	21.3	20.9	25.9
DESIGN - Site Infrastructure	4.0	4.0	3.8	3.7	4.6
DESIGN - National Laboratories	0.0	0.0	0.0	0.0	0.0
DESIGN - Site Constructors	6.7	6.7	6.3	6.1	7.6
DESIGN - Architecture/Engineering Contractors	77.8	77.6	73.2	71.6	88.8
DESIGN - Construction Contractor	0.0	0.0	0.0	0.0	0.0
CONSTRUCTION/D&D - Site Management/Operations	34.0	33.9	32.0	31.3	38.8
CONSTRUCTION/D&D - Site Infrastructure	6.0	6.0	5.6	5.5	6.9
CONSTRUCTION/D&D - National Laboratories	0.0	0.0	0.0	0.0	0.0
CONSTRUCTION/D&D - Site Constructors	20.0	20.0	18.8	18.4	22.8
CONSTRUCTION/D&D - Architecture/Engineering Contracto	15.6	15.5	14.6	14.3	17.8
CONSTRUCTION/D&D - Construction Contractor	329.5	328.8	310.2	303.0	376.3
OPERATIONS - Site Management/Operations	544.1	543.0	512.2	500.5	621.4
OPERATIONS - Site Infrastructure	96.0	95.8	90.4	88.3	109.7
OPERATIONS - National Laboratories	0.0	0.0	0.0	0.0	0.0
OPERATIONS - Site Constructors	0.0	0.0	0.0	0.0	0.0
OPERATIONS - Architecture/Engineering Contractors	0.0	0.0	0.0	0.0	0.0
OPERATIONS - Construction Contractor	0.0	0.0	0.0	0.0	0.0

Worker Category FTE (FTE)	FY05	FY06	FY07	FY08	FY09
Engineer/Management	347.4	346.7	327.1	319.5	396.8
Crafts	267.6	267.0	251.9	246.1	305.6
Maintenance	163.2	162.9	153.7	150.1	186.4
Operators	272.0	271.5	256.1	250.2	310.7
Infrastructure	106.0	105.8	99.8	97.5	121.1
Total	1,156.2	1,153.9	1,088.5	1,063.5	1,320.6

FUNCTION - RETRIEVAL	FY10	FY11	FY12	FY13	FY14
Retrieval Total Costs ($)	**188,882,528**	**200,129,952**	**195,189,248**	**186,527,312**	**184,858,640**
Technology Development (Test) Cost	0	0	0	0	0
Retrieve SY-101, SY-103	0	0	0	0	0
Perform Arm-based SST WR Demo C-106	0	0	0	0	0
Project W-151	0	0	0	0	0
Project W-211	0	0	0	0	0
Perform sluicing WR Demo C-106	0	0	0	0	0
Project W-340	0	0	0	0	0
Subtotal Test Costs	0	0	0	0	0
Test Oversight Costs	0	0	0	0	0
Total Test Costs	**0**	**0**	**0**	**0**	**0**
D/C SST WR System (Backout)					
D/C SST WR System (FY B/O)	60,111,275	60,111,275	60,111,275	60,111,275	60,111,275
Retrieval Operate Costs ($)	**248,993,803**	**260,241,227**	**255,300,523**	**246,638,587**	**244,969,915**

RETRIEVAL ACTIVITY COST BREAKDOWN	FY10	FY11	FY12	FY13	FY14
Activity % of Retrieval Actual Costs (%)					
Studies/Permitting	0	0	0	0	0
Design	10	10	5	5	5
Construction/D&D	30	30	35	35	35
Operation	60	60	60	60	60
Total Percentage	**100**	**100**	**100**	**100**	**100**
Retrieval Activity Costs($)					
Studies/Permitting	0	0	0	0	0
Design	24,899,380	26,024,123	12,765,026	12,331,929	12,248,496
Construction/D&D	74,698,141	78,072,368	89,355,183	86,323,505	85,739,470
Operation	149,396,282	156,144,736	153,180,314	147,983,152	146,981,949
Total Cost	**248,993,803**	**260,241,227**	**255,300,523**	**246,638,587**	**244,969,915**

RETRIEVAL FTE BREAKDOWN	FY10	FY11	FY12	FY13	FY14
Contractor FTE per Retrieval Activity (FTE)					
STUDIES/PERMITTING - Site Management/Operations	0.0	0.0	0.0	0.0	0.0
STUDIES/PERMITTING - Site Infrastructure	0.0	0.0	0.0	0.0	0.0
STUDIES/PERMITTING - National Laboratories	0.0	0.0	0.0	0.0	0.0
STUDIES/PERMITTING - Site Constructors	0.0	0.0	0.0	0.0	0.0
STUDIES/PERMITTING - Architecture/Engineering Contract	0.0	0.0	0.0	0.0	0.0
STUDIES/PERMITTING - Construction Contractor	0.0	0.0	0.0	0.0	0.0
DESIGN - Site Management/Operations	30.2	31.6	15.5	15.0	14.9
DESIGN - Site Infrastructure	5.3	5.6	2.7	2.6	2.6
DESIGN - National Laboratories	0.0	0.0	0.0	0.0	0.0
DESIGN - Site Constructors	8.9	9.3	4.6	4.4	4.4
DESIGN - Architecture/Engineering Contractors	103.7	108.4	53.2	51.4	51.0
DESIGN - Construction Contractor	0.0	0.0	0.0	0.0	0.0
CONSTRUCTION/D&D - Site Management/Operations	45.4	47.4	54.3	52.4	52.1
CONSTRUCTION/D&D - Site Infrastructure	8.0	8.4	9.6	9.2	9.2
CONSTRUCTION/D&D - National Laboratories	0.0	0.0	0.0	0.0	0.0
CONSTRUCTION/D&D - Site Constructors	26.7	27.9	31.9	30.8	30.6
CONSTRUCTION/D&D - Architecture/Engineering Contracto	20.7	21.7	24.8	24.0	23.8
CONSTRUCTION/D&D - Construction Contractor	439.4	459.2	525.6	507.8	504.3
OPERATIONS - Site Management/Operations	725.6	758.4	744.0	718.8	713.9
OPERATIONS - Site Infrastructure	128.1	133.8	131.3	126.8	126.0
OPERATIONS - National Laboratories	0.0	0.0	0.0	0.0	0.0
OPERATIONS - Site Constructors	0.0	0.0	0.0	0.0	0.0
OPERATIONS - Architecture/Engineering Contractors	0.0	0.0	0.0	0.0	0.0
OPERATIONS - Construction Contractor	0.0	0.0	0.0	0.0	0.0

Worker Category FTE (FTE)	FY10	FY11	FY12	FY13	FY14
Engineer/Management	463.3	484.3	431.8	417.1	414.3
Crafts	356.9	373.0	426.9	412.4	409.6
Maintenance	217.7	227.5	223.2	215.6	214.2
Operators	362.8	379.2	372.0	359.4	357.0
Infrastructure	141.4	147.8	143.6	138.7	137.8
Total	**1,542.1**	**1,611.7**	**1,597.5**	**1,543.3**	**1,532.8**

FUNCTION - RETRIEVAL	FY15	FY16	FY17	FY18	FY19
Retrieval Total Costs ($)	**183,292,960**	**184,180,880**	**184,002,032**	**177,984,112**	**101,163,336**
Technology Development (Test) Cost	0	0	0	0	0
Retrieve SY-101, SY-103	0	0	0	0	0
Perform Arm-based SST WR Demo C-106	0	0	0	0	0
Project W-151	0	0	0	0	0
Project W-211	0	0	0	0	0
Perform sluicing WR Demo C-106	0	0	0	0	0
Project W-340	0	0	0	0	0
Subtotal Test Costs	0	0	0	0	0
Test Oversight Costs	0	0	0	0	0
Total Test Costs	**0**	**0**	**0**	**0**	**0**
D/C SST WR System (Backout)					
D/C SST WR System (FY B/O)	60,111,275				
Retrieval Operate Costs ($)	**243,404,235**	**184,180,880**	**184,002,032**	**177,984,112**	**101,163,336**

RETRIEVAL ACTIVITY COST BREAKDOWN	FY15	FY16	FY17	FY18	FY19
Activity % of Retrieval Actual Costs (%)					
Studies/Permitting	0	0	0	0	0
Design	0	0	0	0	0
Construction/D&D	35	20	20	20	100
Operation	65	80	80	80	0
Total Percentage	**100**	**100**	**100**	**100**	**100**
Retrieval Activity Costs($)					
Studies/Permitting	0	0	0	0	0
Design	0	0	0	0	0
Construction/D&D	85,191,482	36,836,176	36,800,406	35,596,822	101,163,336
Operation	158,212,753	147,344,704	147,201,626	142,387,290	0
Total Cost	**243,404,235**	**184,180,880**	**184,002,032**	**177,984,112**	**101,163,336**

RETRIEVAL FTE BREAKDOWN	FY15	FY16	FY17	FY18	FY19
Contractor FTE per Retrieval Activity (FTE)					
STUDIES/PERMITTING - Site Management/Operations	0.0	0.0	0.0	0.0	0.0
STUDIES/PERMITTING - Site Infrastructure	0.0	0.0	0.0	0.0	0.0
STUDIES/PERMITTING - National Laboratories	0.0	0.0	0.0	0.0	0.0
STUDIES/PERMITTING - Site Constructors	0.0	0.0	0.0	0.0	0.0
STUDIES/PERMITTING - Architecture/Engineering Contract	0.0	0.0	0.0	0.0	0.0
STUDIES/PERMITTING - Construction Contractor	0.0	0.0	0.0	0.0	0.0
DESIGN - Site Management/Operations	0.0	0.0	0.0	0.0	0.0
DESIGN - Site Infrastructure	0.0	0.0	0.0	0.0	0.0
DESIGN - National Laboratories	0.0	0.0	0.0	0.0	0.0
DESIGN - Site Constructors	0.0	0.0	0.0	0.0	0.0
DESIGN - Architecture/Engineering Contractors	0.0	0.0	0.0	0.0	0.0
DESIGN - Construction Contractor	0.0	0.0	0.0	0.0	0.0
CONSTRUCTION/D&D - Site Management/Operations	51.7	22.4	22.3	21.6	61.4
CONSTRUCTION/D&D - Site Infrastructure	9.1	3.9	3.9	3.8	10.8
CONSTRUCTION/D&D - National Laboratories	0.0	0.0	0.0	0.0	0.0
CONSTRUCTION/D&D - Site Constructors	30.4	13.2	13.1	12.7	36.1
CONSTRUCTION/D&D - Architecture/Engineering Contracto	23.7	10.2	10.2	9.9	28.1
CONSTRUCTION/D&D - Construction Contractor	501.1	216.7	216.5	209.4	595.1
OPERATIONS - Site Management/Operations	768.5	715.7	715.0	691.6	0.0
OPERATIONS - Site Infrastructure	135.6	126.3	126.2	122.0	0.0
OPERATIONS - National Laboratories	0.0	0.0	0.0	0.0	0.0
OPERATIONS - Site Constructors	0.0	0.0	0.0	0.0	0.0
OPERATIONS - Architecture/Engineering Contractors	0.0	0.0	0.0	0.0	0.0
OPERATIONS - Construction Contractor	0.0	0.0	0.0	0.0	0.0

Worker Category FTE (FTE)	FY15	FY16	FY17	FY18	FY19
Engineer/Management	353.6	229.6	229.4	221.9	237.4
Crafts	407.0	176.0	175.8	170.1	483.3
Maintenance	230.5	214.7	214.5	207.5	0.0
Operators	384.2	357.8	357.5	345.8	0.0
Infrastructure	144.7	130.2	130.1	125.9	10.8
Total	**1,520.1**	**1,108.4**	**1,107.3**	**1,071.1**	**731.6**

FUNCTION - RETRIEVAL	FY20	FY21	FY22	FY23	FY24
Retrieval Total Costs ($)	**82,499,432**	**82,074,856**	**80,271,992**	**75,733,848**	**2,343,816**
Technology Development (Test) Cost	0	0	0	0	0
Retrieve SY-101, SY-103	0	0	0	0	0
Perform Arm-based SST WR Demo C-106	0	0	0	0	0
Project W-151	0	0	0	0	0
Project W-211	0	0	0	0	0
Perform sluicing WR Demo C-106	0	0	0	0	0
Project W-340	0	0	0	0	0
Subtotal Test Costs	0	0	0	0	0
Test Oversight Costs	0	0	0	0	0
Total Test Costs	**0**	**0**	**0**	**0**	**0**
D/C SST WR System (Backout)					
D/C SST WR System (FY B/O)					
Retrieval Operate Costs ($)	**82,499,432**	**82,074,856**	**80,271,992**	**75,733,848**	**2,343,816**

RETRIEVAL ACTIVITY COST BREAKDOWN	FY20	FY21	FY22	FY23	FY24
Activity % of Retrieval Actual Costs (%)					
Studies/Permitting	0	0	0	0	0
Design	0	0	0	0	0
Construction/D&D	100	100	100	100	100
Operation	0	0	0	0	0
Total Percentage	**100**	**100**	**100**	**100**	**100**
Retrieval Activity Costs($)					
Studies/Permitting	0	0	0	0	0
Design	0	0	0	0	0
Construction/D&D	82,499,432	82,074,856	80,271,992	75,733,848	2,343,816
Operation	0	0	0	0	0
Total Cost	**82,499,432**	**82,074,856**	**80,271,992**	**75,733,848**	**2,343,816**

RETRIEVAL FTE BREAKDOWN	FY20	FY21	FY22	FY23	FY24
Contractor FTE per Retrieval Activity (FTE)					
STUDIES/PERMITTING - Site Management/Operations	0.0	0.0	0.0	0.0	0.0
STUDIES/PERMITTING - Site Infrastructure	0.0	0.0	0.0	0.0	0.0
STUDIES/PERMITTING - National Laboratories	0.0	0.0	0.0	0.0	0.0
STUDIES/PERMITTING - Site Constructors	0.0	0.0	0.0	0.0	0.0
STUDIES/PERMITTING - Architecture/Engineering Contract	0.0	0.0	0.0	0.0	0.0
STUDIES/PERMITTING - Construction Contractor	0.0	0.0	0.0	0.0	0.0
DESIGN - Site Management/Operations	0.0	0.0	0.0	0.0	0.0
DESIGN - Site Infrastructure	0.0	0.0	0.0	0.0	0.0
DESIGN - National Laboratories	0.0	0.0	0.0	0.0	0.0
DESIGN - Site Constructors	0.0	0.0	0.0	0.0	0.0
DESIGN - Architecture/Engineering Contractors	0.0	0.0	0.0	0.0	0.0
DESIGN - Construction Contractor	0.0	0.0	0.0	0.0	0.0
CONSTRUCTION/D&D - Site Management/Operations	50.1	49.8	48.7	46.0	1.4
CONSTRUCTION/D&D - Site Infrastructure	8.8	8.8	8.6	8.1	0.3
CONSTRUCTION/D&D - National Laboratories	0.0	0.0	0.0	0.0	0.0
CONSTRUCTION/D&D - Site Constructors	29.5	29.3	28.7	27.0	0.8
CONSTRUCTION/D&D - Architecture/Engineering Contracto	22.9	22.8	22.3	21.0	0.7
CONSTRUCTION/D&D - Construction Contractor	485.3	482.8	472.2	445.5	13.8
OPERATIONS - Site Management/Operations	0.0	0.0	0.0	0.0	0.0
OPERATIONS - Site Infrastructure	0.0	0.0	0.0	0.0	0.0
OPERATIONS - National Laboratories	0.0	0.0	0.0	0.0	0.0
OPERATIONS - Site Constructors	0.0	0.0	0.0	0.0	0.0
OPERATIONS - Architecture/Engineering Contractors	0.0	0.0	0.0	0.0	0.0
OPERATIONS - Construction Contractor	0.0	0.0	0.0	0.0	0.0

Worker Category FTE (FTE)	FY20	FY21	FY22	FY23	FY24
Engineer/Management	193.6	192.6	188.4	177.8	5.5
Crafts	394.1	392.1	383.5	361.8	11.2
Maintenance	0.0	0.0	0.0	0.0	0.0
Operators	0.0	0.0	0.0	0.0	0.0
Infrastructure	8.8	8.8	8.6	8.1	0.3
Total	**596.6**	**593.5**	**580.5**	**547.7**	**16.9**

FUNCTION - RETRIEVAL	FY25	FY26	FY27	FY28	FY29
Retrieval Total Costs ($)	2,118,470	1,938,234	1,775,793	1,780,658	447,597
Technology Development (Test) Cost	0	0	0	0	0
Retrieve SY-101, SY-103	0	0	0	0	0
Perform Arm-based SST WR Demo C-106	0	0	0	0	0
Project W-151	0	0	0	0	0
Project W-211	0	0	0	0	0
Perform sluicing WR Demo C-106	0	0	0	0	0
Project W-340	0	0	0	0	0
Subtotal Test Costs	0	0	0	0	0
Test Oversight Costs	0	0	0	0	0
Total Test Costs	0	0	0	0	0
D/C SST WR System (Backout)					
D/C SST WR System (FY B/O)					
Retrieval Operate Costs ($)	2,118,470	1,938,234	1,775,793	1,780,658	447,597

RETRIEVAL ACTIVITY COST BREAKDOWN	FY25	FY26	FY27	FY28	FY29
Activity % of Retrieval Actual Costs (%)					
Studies/Permitting	0	0	0	0	0
Design	0	0	0	0	0
Construction/D&D	100	100	100	100	100
Operation	0	0	0	0	0
Total Percentage	100	100	100	100	100
Retrieval Activity Costs($)					
Studies/Permitting	0	0	0	0	0
Design	0	0	0	0	0
Construction/D&D	2,118,470	1,938,234	1,775,793	1,780,658	447,597
Operation	0	0	0	0	0
Total Cost	2,118,470	1,938,234	1,775,793	1,780,658	447,597

RETRIEVAL FTE BREAKDOWN	FY25	FY26	FY27	FY28	FY29
Contractor FTE per Retrieval Activity (FTE)					
STUDIES/PERMITTING - Site Management/Operations	0.0	0.0	0.0	0.0	0.0
STUDIES/PERMITTING - Site Infrastructure	0.0	0.0	0.0	0.0	0.0
STUDIES/PERMITTING - National Laboratories	0.0	0.0	0.0	0.0	0.0
STUDIES/PERMITTING - Site Constructors	0.0	0.0	0.0	0.0	0.0
STUDIES/PERMITTING - Architecture/Engineering Contract	0.0	0.0	0.0	0.0	0.0
STUDIES/PERMITTING - Construction Contractor	0.0	0.0	0.0	0.0	0.0
DESIGN - Site Management/Operations	0.0	0.0	0.0	0.0	0.0
DESIGN - Site Infrastructure	0.0	0.0	0.0	0.0	0.0
DESIGN - National Laboratories	0.0	0.0	0.0	0.0	0.0
DESIGN - Site Constructors	0.0	0.0	0.0	0.0	0.0
DESIGN - Architecture/Engineering Contractors	0.0	0.0	0.0	0.0	0.0
DESIGN - Construction Contractor	0.0	0.0	0.0	0.0	0.0
CONSTRUCTION/D&D - Site Management/Operations	1.3	1.2	1.1	1.1	0.3
CONSTRUCTION/D&D - Site Infrastructure	0.2	0.2	0.2	0.2	0.0
CONSTRUCTION/D&D - National Laboratories	0.0	0.0	0.0	0.0	0.0
CONSTRUCTION/D&D - Site Constructors	0.8	0.7	0.6	0.6	0.2
CONSTRUCTION/D&D - Architecture/Engineering Contracto	0.6	0.5	0.5	0.5	0.1
CONSTRUCTION/D&D - Construction Contractor	12.5	11.4	10.4	10.5	2.6
OPERATIONS - Site Management/Operations	0.0	0.0	0.0	0.0	0.0
OPERATIONS - Site Infrastructure	0.0	0.0	0.0	0.0	0.0
OPERATIONS - National Laboratories	0.0	0.0	0.0	0.0	0.0
OPERATIONS - Site Constructors	0.0	0.0	0.0	0.0	0.0
OPERATIONS - Architecture/Engineering Contractors	0.0	0.0	0.0	0.0	0.0
OPERATIONS - Construction Contractor	0.0	0.0	0.0	0.0	0.0

Worker Category FTE (FTE)	FY25	FY26	FY27	FY28	FY29
Engineer/Management	5.0	4.5	4.2	4.2	1.1
Crafts	10.1	9.3	8.5	8.5	2.1
Maintenance	0.0	0.0	0.0	0.0	0.0
Operators	0.0	0.0	0.0	0.0	0.0
Infrastructure	0.2	0.2	0.2	0.2	0.0
Total	15.3	14.0	12.8	12.9	3.2

FUNCTION - RETRIEVAL	FY30	FY31	FY32	FY33	FY34	FY35
Retrieval Total Costs ($)	0	0	0	0	0	0
Technology Development (Test) Cost	0	0	0	0	0	0
Retrieve SY-101, SY-103	0	0	0	0	0	0
Perform Arm-based SST WR Demo C-106	0	0	0	0	0	0
Project W-151	0	0	0	0	0	0
Project W-211	0	0	0	0	0	0
Perform sluicing WR Demo C-106	0	0	0	0	0	0
Project W-340	0	0	0	0	0	0
Subtotal Test Costs	0	0	0	0	0	0
Test Oversight Costs	0	0	0	0	0	0
Total Test Costs	0	0	0	0	0	0
D/C SST WR System (Backout)						
D/C SST WR System (FY B/O)						
Retrieval Operate Costs ($)	0	0	0	0	0	0

RETRIEVAL ACTIVITY COST BREAKDOWN	FY30	FY31	FY32	FY33	FY34	FY35
Activity % of Retrieval Actual Costs (%)						
Studies/Permitting	0	0	0	0	0	0
Design	0	0	0	0	0	0
Construction/D&D	100	0	0	0	0	0
Operation	0	0	0	0	0	0
Total Percentage	100	0	0	0	0	0
Retrieval Activity Costs($)						
Studies/Permitting	0	0	0	0	0	0
Design	0	0	0	0	0	0
Construction/D&D	0	0	0	0	0	0
Operation	0	0	0	0	0	0
Total Cost	0	0	0	0	0	0

RETRIEVAL FTE BREAKDOWN	FY30	FY31	FY32	FY33	FY34	FY35
Contractor FTE per Retrieval Activity (FTE)						
STUDIES/PERMITTING - Site Management/Operations	0.0	0.0	0.0	0.0	0.0	0.0
STUDIES/PERMITTING - Site Infrastructure	0.0	0.0	0.0	0.0	0.0	0.0
STUDIES/PERMITTING - National Laboratories	0.0	0.0	0.0	0.0	0.0	0.0
STUDIES/PERMITTING - Site Constructors	0.0	0.0	0.0	0.0	0.0	0.0
STUDIES/PERMITTING - Architecture/Engineering Contract	0.0	0.0	0.0	0.0	0.0	0.0
STUDIES/PERMITTING - Construction Contractor	0.0	0.0	0.0	0.0	0.0	0.0
DESIGN - Site Management/Operations	0.0	0.0	0.0	0.0	0.0	0.0
DESIGN - Site Infrastructure	0.0	0.0	0.0	0.0	0.0	0.0
DESIGN - National Laboratories	0.0	0.0	0.0	0.0	0.0	0.0
DESIGN - Site Constructors	0.0	0.0	0.0	0.0	0.0	0.0
DESIGN - Architecture/Engineering Contractors	0.0	0.0	0.0	0.0	0.0	0.0
DESIGN - Construction Contractor	0.0	0.0	0.0	0.0	0.0	0.0
CONSTRUCTION/D&D - Site Management/Operations	0.0	0.0	0.0	0.0	0.0	0.0
CONSTRUCTION/D&D - Site Infrastructure	0.0	0.0	0.0	0.0	0.0	0.0
CONSTRUCTION/D&D - National Laboratories	0.0	0.0	0.0	0.0	0.0	0.0
CONSTRUCTION/D&D - Site Constructors	0.0	0.0	0.0	0.0	0.0	0.0
CONSTRUCTION/D&D - Architecture/Engineering Contracto	0.0	0.0	0.0	0.0	0.0	0.0
CONSTRUCTION/D&D - Construction Contractor	0.0	0.0	0.0	0.0	0.0	0.0
OPERATIONS - Site Management/Operations	0.0	0.0	0.0	0.0	0.0	0.0
OPERATIONS - Site Infrastructure	0.0	0.0	0.0	0.0	0.0	0.0
OPERATIONS - National Laboratories	0.0	0.0	0.0	0.0	0.0	0.0
OPERATIONS - Site Constructors	0.0	0.0	0.0	0.0	0.0	0.0
OPERATIONS - Architecture/Engineering Contractors	0.0	0.0	0.0	0.0	0.0	0.0
OPERATIONS - Construction Contractor	0.0	0.0	0.0	0.0	0.0	0.0

Worker Category FTE (FTE)	FY30	FY31	FY32	FY33	FY34	FY35
Engineer/Management	0.0	0.0	0.0	0.0	0.0	0.0
Crafts	0.0	0.0	0.0	0.0	0.0	0.0
Maintenance	0.0	0.0	0.0	0.0	0.0	0.0
Operators	0.0	0.0	0.0	0.0	0.0	0.0
Infrastructure	0.0	0.0	0.0	0.0	0.0	0.0
Total	0.0	0.0	0.0	0.0	0.0	0.0

FUNCTION - RETRIEVAL	FY36	FY37	FY38	FY39	FY40
Retrieval Total Costs ($)	0	0	0	0	0
Technology Development (Test) Cost	0	0	0	0	0
Retrieve SY-101, SY-103	0	0	0	0	0
Perform Arm-based SST WR Demo C-106	0	0	0	0	0
Project W-151	0	0	0	0	0
Project W-211	0	0	0	0	0
Perform sluicing WR Demo C-106	0	0	0	0	0
Project W-340	0	0	0	0	0
Subtotal Test Costs	0	0	0	0	0
Test Oversight Costs	0	0	0	0	0
Total Test Costs	0	0	0	0	0
D/C SST WR System (Backout)					
D/C SST WR System (FY B/O)					
Retrieval Operate Costs ($)	0	0	0	0	0

RETRIEVAL ACTIVITY COST BREAKDOWN	FY36	FY37	FY38	FY39	FY40
Activity % of Retrieval Actual Costs (%)					
Studies/Permitting	0	0	0	0	0
Design	0	0	0	0	0
Construction/D&D	0	0	0	0	0
Operation	0	0	0	0	0
Total Percentage	0	0	0	0	0
Retrieval Activity Costs($)					
Studies/Permitting	0	0	0	0	0
Design	0	0	0	0	0
Construction/D&D	0	0	0	0	0
Operation	0	0	0	0	0
Total Cost	0	0	0	0	0

RETRIEVAL FTE BREAKDOWN	FY36	FY37	FY38	FY39	FY40
Contractor FTE per Retrieval Activity (FTE)					
STUDIES/PERMITTING - Site Management/Operations	0.0	0.0	0.0	0.0	0.0
STUDIES/PERMITTING - Site Infrastructure	0.0	0.0	0.0	0.0	0.0
STUDIES/PERMITTING - National Laboratories	0.0	0.0	0.0	0.0	0.0
STUDIES/PERMITTING - Site Constructors	0.0	0.0	0.0	0.0	0.0
STUDIES/PERMITTING - Architecture/Engineering Contract	0.0	0.0	0.0	0.0	0.0
STUDIES/PERMITTING - Construction Contractor	0.0	0.0	0.0	0.0	0.0
DESIGN - Site Management/Operations	0.0	0.0	0.0	0.0	0.0
DESIGN - Site Infrastructure	0.0	0.0	0.0	0.0	0.0
DESIGN - National Laboratories	0.0	0.0	0.0	0.0	0.0
DESIGN - Site Constructors	0.0	0.0	0.0	0.0	0.0
DESIGN - Architecture/Engineering Contractors	0.0	0.0	0.0	0.0	0.0
DESIGN - Construction Contractor	0.0	0.0	0.0	0.0	0.0
CONSTRUCTION/D&D - Site Management/Operations	0.0	0.0	0.0	0.0	0.0
CONSTRUCTION/D&D - Site Infrastructure	0.0	0.0	0.0	0.0	0.0
CONSTRUCTION/D&D - National Laboratories	0.0	0.0	0.0	0.0	0.0
CONSTRUCTION/D&D - Site Constructors	0.0	0.0	0.0	0.0	0.0
CONSTRUCTION/D&D - Architecture/Engineering Contracto	0.0	0.0	0.0	0.0	0.0
CONSTRUCTION/D&D - Construction Contractor	0.0	0.0	0.0	0.0	0.0
OPERATIONS - Site Management/Operations	0.0	0.0	0.0	0.0	0.0
OPERATIONS - Site Infrastructure	0.0	0.0	0.0	0.0	0.0
OPERATIONS - National Laboratories	0.0	0.0	0.0	0.0	0.0
OPERATIONS - Site Constructors	0.0	0.0	0.0	0.0	0.0
OPERATIONS - Architecture/Engineering Contractors	0.0	0.0	0.0	0.0	0.0
OPERATIONS - Construction Contractor	0.0	0.0	0.0	0.0	0.0

Worker Category FTE (FTE)	FY36	FY37	FY38	FY39	FY40
Engineer/Management	0.0	0.0	0.0	0.0	0.0
Crafts	0.0	0.0	0.0	0.0	0.0
Maintenance	0.0	0.0	0.0	0.0	0.0
Operators	0.0	0.0	0.0	0.0	0.0
Infrastructure	0.0	0.0	0.0	0.0	0.0
Total	0.0	0.0	0.0	0.0	0.0

FUNCTION - RETRIEVAL	Totals
Retrieval Total Costs ($)	4,659,680,908
Technology Development (Test) Cost	42,515,879
Retrieve SY-101, SY-103	2,551,921
Perform Arm-based SST WR Demo C-106	12,005,861
Project W-151	14,076,773
Project W-211	54,507,001
Perform sluicing WR Demo C-106	9,652,350
Project W-340	30,040,000
Subtotal Test Costs	165,349,785
Test Oversight Costs	16,534,979
Total Test Costs	181,884,764
D/C SST WR System (Backout)	
D/C SST WR System (FY B/O)	
Retrieval Operate Costs ($)	4,477,796,151

RETRIEVAL ACTIVITY COST BREAKDOWN

Activity % of Retrieval Actual Costs (%)	
Studies/Permitting	
Design	
Construction/D&D	
Operation	
Total Percentage	

Retrieval Activity Costs($)	Totals
Studies/Permitting	35,367,861
Design	798,465,164
Construction/D&D	1,543,675,925
Operation	2,100,287,201
Total Cost	4,477,796,151

RETRIEVAL FTE BREAKDOWN	Totals
Contractor FTE per Retrieval Activity (FTE)	
STUDIES/PERMITTING - Site Management/Operations	204.0
STUDIES/PERMITTING - Site Infrastructure	36.0
STUDIES/PERMITTING - National Laboratories	9.5
STUDIES/PERMITTING - Site Constructors	0.0
STUDIES/PERMITTING - Architecture/Engineering Contract	0.0
STUDIES/PERMITTING - Construction Contractor	0.0
DESIGN - Site Management/Operations	969.6
DESIGN - Site Infrastructure	171.1
DESIGN - National Laboratories	0.0
DESIGN - Site Constructors	285.2
DESIGN - Architecture/Engineering Contractors	3,326.9
DESIGN - Construction Contractor	0.0
CONSTRUCTION/D&D - Site Management/Operations	937.2
CONSTRUCTION/D&D - Site Infrastructure	165.4
CONSTRUCTION/D&D - National Laboratories	0.0
CONSTRUCTION/D&D - Site Constructors	551.3
CONSTRUCTION/D&D - Architecture/Engineering Contracto	428.8
CONSTRUCTION/D&D - Construction Contractor	9,080.4
OPERATIONS - Site Management/Operations	10,201.4
OPERATIONS - Site Infrastructure	1,800.2
OPERATIONS - National Laboratories	0.0
OPERATIONS - Site Constructors	0.0
OPERATIONS - Architecture/Engineering Contractors	0.0
OPERATIONS - Construction Contractor	0.0

Worker Category FTE (FTE)	Totals
Engineer/Management	10,458.6
Crafts	7,374.6
Maintenance	3,060.4
Operators	5,100.7
Infrastructure	2,172.7
Total	28,167.1

FUNCTION - PRETREATMENT	FY95	FY96	FY97	FY98	FY99	FY00
Pretreatment Total Costs ($)	63,844,216	60,703,688	82,992,715	131,919,632	124,370,192	113,879,120
Technology Development (Test) Cost	17,262,028	16,119,000	16,086,284	11,575,785	11,575,785	4,758,768
Operate LLW Pretreatment Mod 1 Facility First Year (Hot Test)	0	0	0	0	0	0
Operate LLW Pretreatment Mod 2 Facility First Year (Hot Test)	0	0	0	0	0	0
Prepare for Start Up In Tank Processing	0	0	1,063,794	12,714,867	1,114,451	0
Start-up In-Tank Processing	0	0	0	0	3,718,683	4,075,936
Start-up and Operate Pretreatment Pilot Testing	0	0	2,744,937	10,936,178	10,936,178	1,786,388
Continue Operation of Pilot Testing	0	0				11,015,598
Tank AZ-101 Sludge Test (PSW49XXX)	959,856	1,267,219	997,975	10,625,079	37,644	0
Prep LLW Pretreatment Mod 1 Facility For Start-up Phase 2 (Co	0	0	0	0	0	0
Prep LLW Pretreatment Mod 2 Facility For Start-up Phase 2 (Co	0	0	0	0	0	0
WESF Hot Cell Test (PDW211XX)	12,369,178	10,792,515	8,701,654	5,232,769	867,496	0
Operate HLW Pretreatment Facility - First Year (Hot Test)	0	0	0	0	0	0
Prepare HLW Pretreatment Facility for Start-up (Cold Test)	0	0	0	0	0	0
Subtotal Test Costs	30,591,062	28,178,734	29,594,644	51,084,678	28,250,237	21,636,690
Test Oversight Costs	3,059,106	2,817,873	2,959,464	5,108,468	2,825,024	2,163,669
Total Test Costs	33,650,168	30,996,607	32,554,108	56,193,146	31,075,261	23,800,359
Task PDW0500 order of mag B/O						
Annual Facility Cost Adjustment (04-21)						
Pretreatment Operate Costs ($)	30,194,048	29,707,081	50,438,607	75,726,486	93,294,931	90,078,761

PRETREATMENT ACTIVITY COST BREAKDOWN	FY95	FY96	FY97	FY98	FY99	FY00
			682,887,428	48,777,673		
Activity % of Pretreatment Actual Costs (%)						
Studies/Permitting	100	70	70	50	20	20
Design	0	30	30	50	50	20
Construction/D&D	0	0	0	0	30	60
Operation	0	0	0	0	0	0
Total Percentage	100	100	100	100	100	100
Pretreatment Activity Costs($)						
Studies/Permitting	30,194,048	20,794,956	35,307,025	37,863,243	18,658,986	18,015,752
Design	0	8,912,124	15,131,582	37,863,243	46,647,466	18,015,752
Construction/D&D	0	0	0	0	27,988,479	54,047,257
Operation	0	0	0	0	0	0
Total Cost	30,194,048	29,707,081	50,438,607	75,726,486	93,294,931	90,078,761

PRETREATMENT FTE BREAKDOWN	FY95	FY96	FY97	FY98	FY99	FY00
Contractor FTE per Pretreatment Activity (FTE)						
STUDIES/PERMITTING - Site Management/Operations	174.2	119.9	203.6	218.4	107.6	103.9
STUDIES/PERMITTING - Site Infrastructure	30.7	21.2	35.9	38.5	19.0	18.3
STUDIES/PERMITTING - National Laboratories	8.1	5.6	9.5	10.2	5.0	4.8
STUDIES/PERMITTING - Site Constructors	0.0	0.0	0.0	0.0	0.0	0.0
STUDIES/PERMITTING - Architecture/Engineering Contractors	0.0	0.0	0.0	0.0	0.0	0.0
STUDIES/PERMITTING - Construction Contractor	0.0	0.0	0.0	0.0	0.0	0.0
DESIGN - Site Management/Operations	0.0	10.8	18.4	46.0	56.6	21.9
DESIGN - Site Infrastructure	0.0	1.9	3.2	8.1	10.0	3.9
DESIGN - National Laboratories	0.0	0.0	0.0	0.0	0.0	0.0
DESIGN - Site Constructors	0.0	3.2	5.4	13.5	16.7	6.4
DESIGN - Architecture/Engineering Contractors	0.0	37.1	63.0	157.8	194.4	75.1
DESIGN - Construction Contractor	0.0	0.0	0.0	0.0	0.0	0.0
CONSTRUCTION/D&D - Site Management/Operations	0.0	0.0	0.0	0.0	17.0	32.8
CONSTRUCTION/D&D - Site Infrastructure	0.0	0.0	0.0	0.0	3.0	5.8
CONSTRUCTION/D&D - National Laboratories	0.0	0.0	0.0	0.0	0.0	0.0
CONSTRUCTION/D&D - Site Constructors	0.0	0.0	0.0	0.0	10.0	19.3
CONSTRUCTION/D&D - Architecture/Engineering Contractors	0.0	0.0	0.0	0.0	7.8	15.0
CONSTRUCTION/D&D - Construction Contractor	0.0	0.0	0.0	0.0	164.6	317.9
OPERATIONS - Site Management/Operations	0.0	0.0	0.0	0.0	0.0	0.0
OPERATIONS - Site Infrastructure	0.0	0.0	0.0	0.0	0.0	0.0
OPERATIONS - National Laboratories	0.0	0.0	0.0	0.0	0.0	0.0
OPERATIONS - Site Constructors	0.0	0.0	0.0	0.0	0.0	0.0
OPERATIONS - Architecture/Engineering Contractors	0.0	0.0	0.0	0.0	0.0	0.0
OPERATIONS - Construction Contractor	0.0	0.0	0.0	0.0	0.0	0.0

Worker Category FTE (FTE)	FY95	FY96	FY97	FY98	FY99	FY00
Engineer/Management	182.3	176.7	299.9	445.8	446.0	339.0
Crafts	0.0	0.0	0.0	0.0	133.7	258.2
Maintenance	0.0	0.0	0.0	0.0	0.0	0.0
Operators	0.0	0.0	0.0	0.0	0.0	0.0
Infrastructure	30.7	23.1	39.2	46.7	32.0	28.0
Total	213.0	199.7	339.1	492.5	611.7	625.2

FUNCTION - PRETREATMENT	FY01	FY02	FY03	FY04	FY05	FY06
Pretreatment Total Costs ($)	112,328,416	65,312,516	62,136,764	39,876,580	73,613,792	62,391,382
Technology Development (Test) Cost	4,739,809	800,285	500,285	0	0	0
Operate LLW Pretreatment Mod 1 Facility First Year (Hot Test)	0	0	0	0	38,794,388	12,520,940
Operate LLW Pretreatment Mod 2 Facility First Year (Hot Test)	0	0	0	0		20,418,986
Prepare for Start Up In Tank Processing	0	0	0	0	0	0
Start-up In-Tank Processing	4,059,698	4,075,936	4,075,936	4,092,175	341,015	0
Start-up and Operate Pretreatment Pilot Testing	0	0	0	0	0	0
Continue Operation of Pilot Testing	13,113,807	2,255,575	0	0	0	0
Tank AZ-101 Sludge Test (PSW49XXX)	0	0	0	0	0	0
Prep LLW Pretreatment Mod 1 Facility For Start-up Phase 2 (Co	0	0	0	11,059,206	3,608,794	0
Prep LLW Pretreatment Mod 2 Facility For Start-up Phase 2 (Co	0	0	0		17,903,592	5,778,408
WESF Hot Cell Test (PDW211XX)	0	0	0	0	0	0
Operate HLW Pretreatment Facility - First Year (Hot Test)	0	0	0	0	0	0
Prepare HLW Pretreatment Facility for Start-up (Cold Test)	0	0	0	0	0	0
Subtotal Test Costs	21,913,314	7,131,796	4,576,221	15,151,381	60,647,789	38,718,334
Test Oversight Costs	2,191,331	713,180	457,622	1,515,138	6,064,779	3,871,833
Total Test Costs	24,104,645	7,844,976	5,033,843	16,666,519	66,712,568	42,590,167
Task PDW0500 order of mag B/O						876,000
Annual Facility Cost Adjustment (04-21)				114,533,333	114,533,333	114,533,333
Pretreatment Operate Costs ($)	88,223,771	57,467,540	57,102,921	137,743,394	121,434,557	123,458,548

PRETREATMENT ACTIVITY COST BREAKDOWN	FY01	FY02	FY03	FY04	FY05	FY06
Activity % of Pretreatment Actual Costs (%)						
Studies/Permitting	10	10	15	20	0	0
Design	10	0	0	0	0	0
Construction/D&D	80	90	85	40	50	30
Operation	0	0	0	40	50	70
Total Percentage	100	100	100	100	100	100
Pretreatment Activity Costs($)						
Studies/Permitting	8,822,377	5,746,754	8,565,438	27,548,679	0	0
Design	8,822,377	0	0	0	0	0
Construction/D&D	70,579,016	51,720,786	48,537,483	55,097,358	60,717,279	37,037,564
Operation	0	0	0	55,097,358	60,717,279	86,420,984
Total Cost	88,223,771	57,467,540	57,102,921	137,743,394	121,434,557	123,458,548

PRETREATMENT FTE BREAKDOWN	FY01	FY02	FY03	FY04	FY05	FY06
Contractor FTE per Pretreatment Activity (FTE)						
STUDIES/PERMITTING - Site Management/Operations	50.9	33.1	49.4	158.9	0.0	0.0
STUDIES/PERMITTING - Site Infrastructure	9.0	5.8	8.7	28.0	0.0	0.0
STUDIES/PERMITTING - National Laboratories	2.4	1.5	2.3	7.4	0.0	0.0
STUDIES/PERMITTING - Site Constructors	0.0	0.0	0.0	0.0	0.0	0.0
STUDIES/PERMITTING - Architecture/Engineering Contractors	0.0	0.0	0.0	0.0	0.0	0.0
STUDIES/PERMITTING - Construction Contractor	0.0	0.0	0.0	0.0	0.0	0.0
DESIGN - Site Management/Operations	10.7	0.0	0.0	0.0	0.0	0.0
DESIGN - Site Infrastructure	1.9	0.0	0.0	0.0	0.0	0.0
DESIGN - National Laboratories	0.0	0.0	0.0	0.0	0.0	0.0
DESIGN - Site Constructors	3.2	0.0	0.0	0.0	0.0	0.0
DESIGN - Architecture/Engineering Contractors	36.8	0.0	0.0	0.0	0.0	0.0
DESIGN - Construction Contractor	0.0	0.0	0.0	0.0	0.0	0.0
CONSTRUCTION/D&D - Site Management/Operations	42.9	31.4	29.5	33.5	36.9	22.5
CONSTRUCTION/D&D - Site Infrastructure	7.6	5.5	5.2	5.9	6.5	4.0
CONSTRUCTION/D&D - National Laboratories	0.0	0.0	0.0	0.0	0.0	0.0
CONSTRUCTION/D&D - Site Constructors	25.2	18.5	17.3	19.7	21.7	13.2
CONSTRUCTION/D&D - Architecture/Engineering Contractors	19.6	14.4	13.5	15.3	16.9	10.3
CONSTRUCTION/D&D - Construction Contractor	415.2	304.2	285.5	324.1	357.2	217.9
OPERATIONS - Site Management/Operations	0.0	0.0	0.0	267.6	294.9	419.8
OPERATIONS - Site Infrastructure	0.0	0.0	0.0	47.2	52.0	74.1
OPERATIONS - National Laboratories	0.0	0.0	0.0	0.0	0.0	0.0
OPERATIONS - Site Constructors	0.0	0.0	0.0	0.0	0.0	0.0
OPERATIONS - Architecture/Engineering Contractors	0.0	0.0	0.0	0.0	0.0	0.0
OPERATIONS - Construction Contractor	0.0	0.0	0.0	0.0	0.0	0.0

Worker Category FTE (FTE)	FY01	FY02	FY03	FY04	FY05	FY06
Engineer/Management	269.5	156.1	165.6	349.1	201.5	170.9
Crafts	337.2	247.1	231.9	263.2	290.1	176.9
Maintenance	0.0	0.0	0.0	80.3	88.5	125.9
Operators	0.0	0.0	0.0	133.8	147.5	209.9
Infrastructure	18.4	11.4	13.9	81.2	58.5	78.0
Total	625.1	414.6	411.4	907.6	786.0	761.7

FUNCTION - PRETREATMENT	FY07	FY08	FY09	FY10	FY11	FY12
Pretreatment Total Costs ($)	34,585,724	27,246,602	14,546,960	14,269,083	14,269,083	14,269,083
Technology Development (Test) Cost	0	0	0	0	0	0
Operate LLW Pretreatment Mod 1 Facility First Year (Hot Test)	0	0	0	0	0	0
Operate LLW Pretreatment Mod 2 Facility First Year (Hot Test)	6,590,255	0	0	0	0	0
Prepare for Start Up In Tank Processing	0	0	0	0	0	0
Start-up In-Tank Processing	0	0	0	0	0	0
Start-up and Operate Pretreatment Pilot Testing	0	0	0	0	0	0
Continue Operation of Pilot Testing	0	0	0	0	0	0
Tank AZ-101 Sludge Test (PSW49XXX)	0	0	0	0	0	0
Prep LLW Pretreatment Mod 1 Facility For Start-up Phase 2 (Co	0	0	0	0	0	0
Prep LLW Pretreatment Mod 2 Facility For Start-up Phase 2 (Co	0	0	0	0	0	0
WESF Hot Cell Test (PDW211XX)	0	0	0	0	0	0
Operate HLW Pretreatment Facility - First Year (Hot Test)	0	965,396	0	0	0	0
Prepare HLW Pretreatment Facility for Start-up (Cold Test)	1,061,420	2,122,840	0	0	0	0
Subtotal Test Costs	7,651,675	3,088,236	0	0	0	0
Test Oversight Costs	765,168	308,824	0	0	0	0
Total Test Costs	8,416,843	3,397,060	0	0	0	0
Task PDW0500 order of mag B/O	11,037,426	8,322,174				
Annual Facility Cost Adjustment (04-21)	114,533,333	114,533,333	114,533,333	114,533,333	114,533,333	114,533,333
Pretreatment Operate Costs ($)	129,664,789	130,060,702	129,080,293	128,802,416	128,802,416	128,802,416

PRETREATMENT ACTIVITY COST BREAKDOWN	FY07	FY08	FY09	FY10	FY11	FY12
Activity % of Pretreatment Actual Costs (%)						
Studies/Permitting	0	0	0	0	0	0
Design	0	0	0	0	0	0
Construction/D&D	0	0	0	0	0	0
Operation	100	100	100	100	100	100
Total Percentage	100	100	100	100	100	100
Pretreatment Activity Costs($)						
Studies/Permitting	0	0	0	0	0	0
Design	0	0	0	0	0	0
Construction/D&D	0	0	0	0	0	0
Operation	129,664,789	130,060,702	129,080,293	128,802,416	128,802,416	128,802,416
Total Cost	129,664,789	130,060,702	129,080,293	128,802,416	128,802,416	128,802,416

PRETREATMENT FTE BREAKDOWN	FY07	FY08	FY09	FY10	FY11	FY12
Contractor FTE per Pretreatment Activity (FTE)						
STUDIES/PERMITTING - Site Management/Operations	0.0	0.0	0.0	0.0	0.0	0.0
STUDIES/PERMITTING - Site Infrastructure	0.0	0.0	0.0	0.0	0.0	0.0
STUDIES/PERMITTING - National Laboratories	0.0	0.0	0.0	0.0	0.0	0.0
STUDIES/PERMITTING - Site Constructors	0.0	0.0	0.0	0.0	0.0	0.0
STUDIES/PERMITTING - Architecture/Engineering Contractors	0.0	0.0	0.0	0.0	0.0	0.0
STUDIES/PERMITTING - Construction Contractor	0.0	0.0	0.0	0.0	0.0	0.0
DESIGN - Site Management/Operations	0.0	0.0	0.0	0.0	0.0	0.0
DESIGN - Site Infrastructure	0.0	0.0	0.0	0.0	0.0	0.0
DESIGN - National Laboratories	0.0	0.0	0.0	0.0	0.0	0.0
DESIGN - Site Constructors	0.0	0.0	0.0	0.0	0.0	0.0
DESIGN - Architecture/Engineering Contractors	0.0	0.0	0.0	0.0	0.0	0.0
DESIGN - Construction Contractor	0.0	0.0	0.0	0.0	0.0	0.0
CONSTRUCTION/D&D - Site Management/Operations	0.0	0.0	0.0	0.0	0.0	0.0
CONSTRUCTION/D&D - Site Infrastructure	0.0	0.0	0.0	0.0	0.0	0.0
CONSTRUCTION/D&D - National Laboratories	0.0	0.0	0.0	0.0	0.0	0.0
CONSTRUCTION/D&D - Site Constructors	0.0	0.0	0.0	0.0	0.0	0.0
CONSTRUCTION/D&D - Architecture/Engineering Contractors	0.0	0.0	0.0	0.0	0.0	0.0
CONSTRUCTION/D&D - Construction Contractor	0.0	0.0	0.0	0.0	0.0	0.0
OPERATIONS - Site Management/Operations	629.8	631.7	627.0	625.6	625.6	625.6
OPERATIONS - Site Infrastructure	111.1	111.5	110.6	110.4	110.4	110.4
OPERATIONS - National Laboratories	0.0	0.0	0.0	0.0	0.0	0.0
OPERATIONS - Site Constructors	0.0	0.0	0.0	0.0	0.0	0.0
OPERATIONS - Architecture/Engineering Contractors	0.0	0.0	0.0	0.0	0.0	0.0
OPERATIONS - Construction Contractor	0.0	0.0	0.0	0.0	0.0	0.0

Worker Category FTE (FTE)	FY07	FY08	FY09	FY10	FY11	FY12
Engineer/Management	126.0	126.3	125.4	125.1	125.1	125.1
Crafts	0.0	0.0	0.0	0.0	0.0	0.0
Maintenance	188.9	189.5	188.1	187.7	187.7	187.7
Operators	314.9	315.9	313.5	312.8	312.8	312.8
Infrastructure	111.1	111.5	110.6	110.4	110.4	110.4
Total	740.9	743.2	737.6	736.0	736.0	736.0

FUNCTION - PRETREATMENT	FY13	FY14	FY15	FY16	FY17	FY18
Pretreatment Total Costs ($)	14,212,234	14,269,083	14,600,177	14,894,422	14,780,724	14,780,724
Technology Development (Test) Cost	0	0	0	0	0	0
Operate LLW Pretreatment Mod 1 Facility First Year (Hot Test)	0	0	0	0	0	0
Operate LLW Pretreatment Mod 2 Facility First Year (Hot Test)	0	0	0	0	0	0
Prepare for Start Up In Tank Processing	0	0	0	0	0	0
Start-up In-Tank Processing	0	0	0	0	0	0
Start-up and Operate Pretreatment Pilot Testing	0	0	0	0	0	0
Continue Operation of Pilot Testing	0	0	0	0	0	0
Tank AZ-101 Sludge Test (PSW49XXX)	0	0	0	0	0	0
Prep LLW Pretreatment Mod 1 Facility For Start-up Phase 2 (Co	0	0	0	0	0	0
Prep LLW Pretreatment Mod 2 Facility For Start-up Phase 2 (Co	0	0	0	0	0	0
WESF Hot Cell Test (PDW211XX)	0	0	0	0	0	0
Operate HLW Pretreatment Facility - First Year (Hot Test)	0	0	0	0	0	0
Prepare HLW Pretreatment Facility for Start-up (Cold Test)	0	0	0	0	0	0
Subtotal Test Costs	0	0	0	0	0	0
Test Oversight Costs	0	0	0	0	0	0
Total Test Costs	0	0	0	0	0	0
Task PDW0500 order of mag B/O Annual Facility Cost Adjustment (04-21)	114,533,333	114,533,333	114,533,333	114,533,333	114,533,333	114,533,333
Pretreatment Operate Costs ($)	128,745,567	128,802,416	129,133,510	129,427,755	129,314,057	129,314,057

PRETREATMENT ACTIVITY COST BREAKDOWN	FY13	FY14	FY15	FY16	FY17	FY18
Activity % of Pretreatment Actual Costs (%)						
Studies/Permitting	0	0	0	0	0	0
Design	0	0	0	0	0	0
Construction/D&D	0	0	0	0	0	0
Operation	100	100	100	100	100	100
Total Percentage	100	100	100	100	100	100
Pretreatment Activity Costs($)						
Studies/Permitting	0	0	0	0	0	0
Design	0	0	0	0	0	0
Construction/D&D	0	0	0	0	0	0
Operation	128,745,567	128,802,416	129,133,510	129,427,755	129,314,057	129,314,057
Total Cost	128,745,567	128,802,416	129,133,510	129,427,755	129,314,057	129,314,057

PRETREATMENT FTE BREAKDOWN	FY13	FY14	FY15	FY16	FY17	FY18
Contractor FTE per Pretreatment Activity (FTE)						
STUDIES/PERMITTING - Site Management/Operations	0.0	0.0	0.0	0.0	0.0	0.0
STUDIES/PERMITTING - Site Infrastructure	0.0	0.0	0.0	0.0	0.0	0.0
STUDIES/PERMITTING - National Laboratories	0.0	0.0	0.0	0.0	0.0	0.0
STUDIES/PERMITTING - Site Constructors	0.0	0.0	0.0	0.0	0.0	0.0
STUDIES/PERMITTING - Architecture/Engineering Contractors	0.0	0.0	0.0	0.0	0.0	0.0
STUDIES/PERMITTING - Construction Contractor	0.0	0.0	0.0	0.0	0.0	0.0
DESIGN - Site Management/Operations	0.0	0.0	0.0	0.0	0.0	0.0
DESIGN - Site Infrastructure	0.0	0.0	0.0	0.0	0.0	0.0
DESIGN - National Laboratories	0.0	0.0	0.0	0.0	0.0	0.0
DESIGN - Site Constructors	0.0	0.0	0.0	0.0	0.0	0.0
DESIGN - Architecture/Engineering Contractors	0.0	0.0	0.0	0.0	0.0	0.0
DESIGN - Construction Contractor	0.0	0.0	0.0	0.0	0.0	0.0
CONSTRUCTION/D&D - Site Management/Operations	0.0	0.0	0.0	0.0	0.0	0.0
CONSTRUCTION/D&D - Site Infrastructure	0.0	0.0	0.0	0.0	0.0	0.0
CONSTRUCTION/D&D - National Laboratories	0.0	0.0	0.0	0.0	0.0	0.0
CONSTRUCTION/D&D - Site Constructors	0.0	0.0	0.0	0.0	0.0	0.0
CONSTRUCTION/D&D - Architecture/Engineering Contractors	0.0	0.0	0.0	0.0	0.0	0.0
CONSTRUCTION/D&D - Construction Contractor	0.0	0.0	0.0	0.0	0.0	0.0
OPERATIONS - Site Management/Operations	625.3	625.6	627.2	628.6	628.1	628.1
OPERATIONS - Site Infrastructure	110.4	110.4	110.7	110.9	110.8	110.8
OPERATIONS - National Laboratories	0.0	0.0	0.0	0.0	0.0	0.0
OPERATIONS - Site Constructors	0.0	0.0	0.0	0.0	0.0	0.0
OPERATIONS - Architecture/Engineering Contractors	0.0	0.0	0.0	0.0	0.0	0.0
OPERATIONS - Construction Contractor	0.0	0.0	0.0	0.0	0.0	0.0

Worker Category FTE (FTE)	FY13	FY14	FY15	FY16	FY17	FY18
Engineer/Management	125.1	125.1	125.4	125.7	125.6	125.6
Crafts	0.0	0.0	0.0	0.0	0.0	0.0
Maintenance	187.6	187.7	188.2	188.6	188.4	188.4
Operators	312.7	312.8	313.6	314.3	314.0	314.0
Infrastructure	110.4	110.4	110.7	110.9	110.8	110.8
Total	735.7	736.0	737.9	739.6	738.9	738.9

FUNCTION - PRETREATMENT	FY19	FY20	FY21	FY22	FY23	FY24
Pretreatment Total Costs ($)	14,837,573	18,513,006	34,420,972	7,846,803	0	0
Technology Development (Test) Cost	0	0	0	0	0	0
Operate LLW Pretreatment Mod 1 Facility First Year (Hot Test)	0	0	0	0	0	0
Operate LLW Pretreatment Mod 2 Facility First Year (Hot Test)	0	0	0	0	0	0
Prepare for Start Up In Tank Processing	0	0	0	0	0	0
Start-up In-Tank Processing	0	0	0	0	0	0
Start-up and Operate Pretreatment Pilot Testing	0	0	0	0	0	0
Continue Operation of Pilot Testing	0	0	0	0	0	0
Tank AZ-101 Sludge Test (PSW49XXX)	0	0	0	0	0	0
Prep LLW Pretreatment Mod 1 Facility For Start-up Phase 2 (Co	0	0	0	0	0	0
Prep LLW Pretreatment Mod 2 Facility For Start-up Phase 2 (Co	0	0	0	0	0	0
WESF Hot Cell Test (PDW211XX)	0	0	0	0	0	0
Operate HLW Pretreatment Facility - First Year (Hot Test)	0	0	0	0	0	0
Prepare HLW Pretreatment Facility for Start-up (Cold Test)	0	0	0	0	0	0
Subtotal Test Costs	0	0	0	0	0	0
Test Oversight Costs	0	0	0	0	0	0
Total Test Costs	0	0	0	0	0	0
Task PDW0500 order of mag B/O Annual Facility Cost Adjustment (04-21)	114,533,333	114,533,333	114,533,333			
Pretreatment Operate Costs ($)	129,370,906	133,046,339	148,954,305	7,846,803	0	0

PRETREATMENT ACTIVITY COST BREAKDOWN	FY19	FY20	FY21	FY22	FY23	FY24
Activity % of Pretreatment Actual Costs (%)						
Studies/Permitting	0	0	0	0	0	0
Design	0	0	0	0	0	0
Construction/D&D	0	20	100	100	0	0
Operation	100	80	0	0	0	0
Total Percentage	100	100	100	100	0	0
Pretreatment Activity Costs($)						
Studies/Permitting	0	0	0	0	0	0
Design	0	0	0	0	0	0
Construction/D&D	0	26,609,268	148,954,305	7,846,803	0	0
Operation	129,370,906	106,437,071	0	0	0	0
Total Cost	129,370,906	133,046,339	148,954,305	7,846,803	0	0

PRETREATMENT FTE BREAKDOWN	FY19	FY20	FY21	FY22	FY23	FY24
Contractor FTE per Pretreatment Activity (FTE)						
STUDIES/PERMITTING - Site Management/Operations	0.0	0.0	0.0	0.0	0.0	0.0
STUDIES/PERMITTING - Site Infrastructure	0.0	0.0	0.0	0.0	0.0	0.0
STUDIES/PERMITTING - National Laboratories	0.0	0.0	0.0	0.0	0.0	0.0
STUDIES/PERMITTING - Site Constructors	0.0	0.0	0.0	0.0	0.0	0.0
STUDIES/PERMITTING - Architecture/Engineering Contractors	0.0	0.0	0.0	0.0	0.0	0.0
STUDIES/PERMITTING - Construction Contractor	0.0	0.0	0.0	0.0	0.0	0.0
DESIGN - Site Management/Operations	0.0	0.0	0.0	0.0	0.0	0.0
DESIGN - Site Infrastructure	0.0	0.0	0.0	0.0	0.0	0.0
DESIGN - National Laboratories	0.0	0.0	0.0	0.0	0.0	0.0
DESIGN - Site Constructors	0.0	0.0	0.0	0.0	0.0	0.0
DESIGN - Architecture/Engineering Contractors	0.0	0.0	0.0	0.0	0.0	0.0
DESIGN - Construction Contractor	0.0	0.0	0.0	0.0	0.0	0.0
CONSTRUCTION/D&D - Site Management/Operations	0.0	16.2	90.4	4.8	0.0	0.0
CONSTRUCTION/D&D - Site Infrastructure	0.0	2.9	16.0	0.8	0.0	0.0
CONSTRUCTION/D&D - National Laboratories	0.0	0.0	0.0	0.0	0.0	0.0
CONSTRUCTION/D&D - Site Constructors	0.0	9.5	53.2	2.8	0.0	0.0
CONSTRUCTION/D&D - Architecture/Engineering Contractors	0.0	7.4	41.4	2.2	0.0	0.0
CONSTRUCTION/D&D - Construction Contractor	0.0	156.5	876.2	46.2	0.0	0.0
OPERATIONS - Site Management/Operations	628.4	517.0	0.0	0.0	0.0	0.0
OPERATIONS - Site Infrastructure	110.9	91.2	0.0	0.0	0.0	0.0
OPERATIONS - National Laboratories	0.0	0.0	0.0	0.0	0.0	0.0
OPERATIONS - Site Constructors	0.0	0.0	0.0	0.0	0.0	0.0
OPERATIONS - Architecture/Engineering Contractors	0.0	0.0	0.0	0.0	0.0	0.0
OPERATIONS - Construction Contractor	0.0	0.0	0.0	0.0	0.0	0.0

Worker Category FTE (FTE)	FY19	FY20	FY21	FY22	FY23	FY24
Engineer/Management	125.7	165.9	349.6	18.4	0.0	0.0
Crafts	0.0	127.1	711.6	37.5	0.0	0.0
Maintenance	188.5	155.1	0.0	0.0	0.0	0.0
Operators	314.2	258.5	0.0	0.0	0.0	0.0
Infrastructure	110.9	94.1	16.0	0.8	0.0	0.0
Total	739.3	800.6	1,077.2	56.7	0.0	0.0

FUNCTION - PRETREATMENT	FY25	FY26	FY27	FY28	FY29	FY30
Pretreatment Total Costs ($)	0	0	0	0	0	0
Technology Development (Test) Cost	0	0	0	0	0	0
Operate LLW Pretreatment Mod 1 Facility First Year (Hot Test)	0	0	0	0	0	0
Operate LLW Pretreatment Mod 2 Facility First Year (Hot Test)	0	0	0	0	0	0
Prepare for Start Up In Tank Processing	0	0	0	0	0	0
Start-up In-Tank Processing	0	0	0	0	0	0
Start-up and Operate Pretreatment Pilot Testing	0	0	0	0	0	0
Continue Operation of Pilot Testing	0	0	0	0	0	0
Tank AZ-101 Sludge Test (PSW49XXX)	0	0	0	0	0	0
Prep LLW Pretreatment Mod 1 Facility For Start-up Phase 2 (Co	0	0	0	0	0	0
Prep LLW Pretreatment Mod 2 Facility For Start-up Phase 2 (Co	0	0	0	0	0	0
WESF Hot Cell Test (PDW211XX)	0	0	0	0	0	0
Operate HLW Pretreatment Facility - First Year (Hot Test)	0	0	0	0	0	0
Prepare HLW Pretreatment Facility for Start-up (Cold Test)	0	0	0	0	0	0
Subtotal Test Costs	0	0	0	0	0	0
Test Oversight Costs	0	0	0	0	0	0
Total Test Costs	0	0	0	0	0	0
Task PDW0500 order of mag B/O Annual Facility Cost Adjustment (04-21)						
Pretreatment Operate Costs ($)	0	0	0	0	0	0

PRETREATMENT ACTIVITY COST BREAKDOWN	FY25	FY26	FY27	FY28	FY29	FY30
Activity % of Pretreatment Actual Costs (%)						
Studies/Permitting	0	0	0	0	0	0
Design	0	0	0	0	0	0
Construction/D&D	0	0	0	0	0	0
Operation	0	0	0	0	0	0
Total Percentage	0	0	0	0	0	0
Pretreatment Activity Costs($)						
Studies/Permitting	0	0	0	0	0	0
Design	0	0	0	0	0	0
Construction/D&D	0	0	0	0	0	0
Operation	0	0	0	0	0	0
Total Cost	0	0	0	0	0	0

PRETREATMENT FTE BREAKDOWN	FY25	FY26	FY27	FY28	FY29	FY30
Contractor FTE per Pretreatment Activity (FTE)						
STUDIES/PERMITTING - Site Management/Operations	0.0	0.0	0.0	0.0	0.0	0.0
STUDIES/PERMITTING - Site Infrastructure	0.0	0.0	0.0	0.0	0.0	0.0
STUDIES/PERMITTING - National Laboratories	0.0	0.0	0.0	0.0	0.0	0.0
STUDIES/PERMITTING - Site Constructors	0.0	0.0	0.0	0.0	0.0	0.0
STUDIES/PERMITTING - Architecture/Engineering Contractors	0.0	0.0	0.0	0.0	0.0	0.0
STUDIES/PERMITTING - Construction Contractor	0.0	0.0	0.0	0.0	0.0	0.0
DESIGN - Site Management/Operations	0.0	0.0	0.0	0.0	0.0	0.0
DESIGN - Site Infrastructure	0.0	0.0	0.0	0.0	0.0	0.0
DESIGN - National Laboratories	0.0	0.0	0.0	0.0	0.0	0.0
DESIGN - Site Constructors	0.0	0.0	0.0	0.0	0.0	0.0
DESIGN - Architecture/Engineering Contractors	0.0	0.0	0.0	0.0	0.0	0.0
DESIGN - Construction Contractor	0.0	0.0	0.0	0.0	0.0	0.0
CONSTRUCTION/D&D - Site Management/Operations	0.0	0.0	0.0	0.0	0.0	0.0
CONSTRUCTION/D&D - Site Infrastructure	0.0	0.0	0.0	0.0	0.0	0.0
CONSTRUCTION/D&D - National Laboratories	0.0	0.0	0.0	0.0	0.0	0.0
CONSTRUCTION/D&D - Site Constructors	0.0	0.0	0.0	0.0	0.0	0.0
CONSTRUCTION/D&D - Architecture/Engineering Contractors	0.0	0.0	0.0	0.0	0.0	0.0
CONSTRUCTION/D&D - Construction Contractor	0.0	0.0	0.0	0.0	0.0	0.0
OPERATIONS - Site Management/Operations	0.0	0.0	0.0	0.0	0.0	0.0
OPERATIONS - Site Infrastructure	0.0	0.0	0.0	0.0	0.0	0.0
OPERATIONS - National Laboratories	0.0	0.0	0.0	0.0	0.0	0.0
OPERATIONS - Site Constructors	0.0	0.0	0.0	0.0	0.0	0.0
OPERATIONS - Architecture/Engineering Contractors	0.0	0.0	0.0	0.0	0.0	0.0
OPERATIONS - Construction Contractor	0.0	0.0	0.0	0.0	0.0	0.0

Worker Category FTE (FTE)	FY25	FY26	FY27	FY28	FY29	FY30
Engineer/Management	0.0	0.0	0.0	0.0	0.0	0.0
Crafts	0.0	0.0	0.0	0.0	0.0	0.0
Maintenance	0.0	0.0	0.0	0.0	0.0	0.0
Operators	0.0	0.0	0.0	0.0	0.0	0.0
Infrastructure	0.0	0.0	0.0	0.0	0.0	0.0
Total	0.0	0.0	0.0	0.0	0.0	0.0

FUNCTION - PRETREATMENT	FY31	FY32	FY33	FY34	FY35	FY36
Pretreatment Total Costs ($)	0	0	0	0	0	0
Technology Development (Test) Cost	0	0	0	0	0	0
Operate LLW Pretreatment Mod 1 Facility First Year (Hot Test)	0	0	0	0	0	0
Operate LLW Pretreatment Mod 2 Facility First Year (Hot Test)	0	0	0	0	0	0
Prepare for Start Up In Tank Processing	0	0	0	0	0	0
Start-up In-Tank Processing	0	0	0	0	0	0
Start-up and Operate Pretreatment Pilot Testing	0	0	0	0	0	0
Continue Operation of Pilot Testing	0	0	0	0	0	0
Tank AZ-101 Sludge Test (PSW49XXX)	0	0	0	0	0	0
Prep LLW Pretreatment Mod 1 Facility For Start-up Phase 2 (Co	0	0	0	0	0	0
Prep LLW Pretreatment Mod 2 Facility For Start-up Phase 2 (Co	0	0	0	0	0	0
WESF Hot Cell Test (PDW211XX)	0	0	0	0	0	0
Operate HLW Pretreatment Facility - First Year (Hot Test)	0	0	0	0	0	0
Prepare HLW Pretreatment Facility for Start-up (Cold Test)	0	0	0	0	0	0
Subtotal Test Costs	0	0	0	0	0	0
Test Oversight Costs	0	0	0	0	0	0
Total Test Costs	0	0	0	0	0	0
Task PDW0500 order of mag B/O Annual Facility Cost Adjustment (04-21)						
Pretreatment Operate Costs ($)	0	0	0	0	0	0

PRETREATMENT ACTIVITY COST BREAKDOWN	FY31	FY32	FY33	FY34	FY35	FY36
Activity % of Pretreatment Actual Costs (%)						
Studies/Permitting	0	0	0	0	0	0
Design	0	0	0	0	0	0
Construction/D&D	0	0	0	0	0	0
Operation	0	0	0	0	0	0
Total Percentage	0	0	0	0	0	0
Pretreatment Activity Costs($)						
Studies/Permitting	0	0	0	0	0	0
Design	0	0	0	0	0	0
Construction/D&D	0	0	0	0	0	0
Operation	0	0	0	0	0	0
Total Cost	0	0	0	0	0	0

PRETREATMENT FTE BREAKDOWN	FY31	FY32	FY33	FY34	FY35	FY36
Contractor FTE per Pretreatment Activity (FTE)						
STUDIES/PERMITTING - Site Management/Operations	0.0	0.0	0.0	0.0	0.0	0.0
STUDIES/PERMITTING - Site Infrastructure	0.0	0.0	0.0	0.0	0.0	0.0
STUDIES/PERMITTING - National Laboratories	0.0	0.0	0.0	0.0	0.0	0.0
STUDIES/PERMITTING - Site Constructors	0.0	0.0	0.0	0.0	0.0	0.0
STUDIES/PERMITTING - Architecture/Engineering Contractors	0.0	0.0	0.0	0.0	0.0	0.0
STUDIES/PERMITTING - Construction Contractor	0.0	0.0	0.0	0.0	0.0	0.0
DESIGN - Site Management/Operations	0.0	0.0	0.0	0.0	0.0	0.0
DESIGN - Site Infrastructure	0.0	0.0	0.0	0.0	0.0	0.0
DESIGN - National Laboratories	0.0	0.0	0.0	0.0	0.0	0.0
DESIGN - Site Constructors	0.0	0.0	0.0	0.0	0.0	0.0
DESIGN - Architecture/Engineering Contractors	0.0	0.0	0.0	0.0	0.0	0.0
DESIGN - Construction Contractor	0.0	0.0	0.0	0.0	0.0	0.0
CONSTRUCTION/D&D - Site Management/Operations	0.0	0.0	0.0	0.0	0.0	0.0
CONSTRUCTION/D&D - Site Infrastructure	0.0	0.0	0.0	0.0	0.0	0.0
CONSTRUCTION/D&D - National Laboratories	0.0	0.0	0.0	0.0	0.0	0.0
CONSTRUCTION/D&D - Site Constructors	0.0	0.0	0.0	0.0	0.0	0.0
CONSTRUCTION/D&D - Architecture/Engineering Contractors	0.0	0.0	0.0	0.0	0.0	0.0
CONSTRUCTION/D&D - Construction Contractor	0.0	0.0	0.0	0.0	0.0	0.0
OPERATIONS - Site Management/Operations	0.0	0.0	0.0	0.0	0.0	0.0
OPERATIONS - Site Infrastructure	0.0	0.0	0.0	0.0	0.0	0.0
OPERATIONS - National Laboratories	0.0	0.0	0.0	0.0	0.0	0.0
OPERATIONS - Site Constructors	0.0	0.0	0.0	0.0	0.0	0.0
OPERATIONS - Architecture/Engineering Contractors	0.0	0.0	0.0	0.0	0.0	0.0
OPERATIONS - Construction Contractor	0.0	0.0	0.0	0.0	0.0	0.0

Worker Category FTE (FTE)	FY31	FY32	FY33	FY34	FY35	FY36
Engineer/Management	0.0	0.0	0.0	0.0	0.0	0.0
Crafts	0.0	0.0	0.0	0.0	0.0	0.0
Maintenance	0.0	0.0	0.0	0.0	0.0	0.0
Operators	0.0	0.0	0.0	0.0	0.0	0.0
Infrastructure	0.0	0.0	0.0	0.0	0.0	0.0
Total	0.0	0.0	0.0	0.0	0.0	0.0

FUNCTION - PRETREATMENT	FY37	FY38	FY39	FY40	Totals
Pretreatment Total Costs ($)	0	0	0	0	1,265,711,266
Technology Development (Test) Cost	0	0	0	0	83,418,029
Operate LLW Pretreatment Mod 1 Facility First Year (Hot Test)	0	0	0	0	51,315,328
Operate LLW Pretreatment Mod 2 Facility First Year (Hot Test)	0	0	0	0	27,009,241
Prepare for Start Up In Tank Processing	0	0	0	0	14,893,112
Start-up In-Tank Processing	0	0	0	0	24,439,379
Start-up and Operate Pretreatment Pilot Testing	0	0	0	0	26,403,681
Continue Operation of Pilot Testing	0	0	0	0	26,384,980
Tank AZ-101 Sludge Test (PSW49XXX)	0	0	0	0	13,887,773
Prep LLW Pretreatment Mod 1 Facility For Start-up Phase 2 (Co	0	0	0	0	14,668,000
Prep LLW Pretreatment Mod 2 Facility For Start-up Phase 2 (Co	0	0	0	0	23,682,000
WESF Hot Cell Test (PDW211XX)	0	0	0	0	37,963,612
Operate HLW Pretreatment Facility - First Year (Hot Test)	0	0	0	0	965,396
Prepare HLW Pretreatment Facility for Start-up (Cold Test)	0	0	0	0	3,184,260
Subtotal Test Costs	0	0	0	0	348,214,791
Test Oversight Costs	0	0	0	0	34,821,479
Total Test Costs	0	0	0	0	383,036,270
Task PDW0500 order of mag B/O					0
Annual Facility Cost Adjustment (04-21)					20,235,600
					2,061,600,000
					0
Pretreatment Operate Costs ($)	0	0	0	0	2,924,039,396

PRETREATMENT ACTIVITY COST BREAKDOWN	FY37	FY38	FY39	FY40	
Activity % of Pretreatment Actual Costs (%)					
Studies/Permitting	0	0	0	0	
Design	0	0	0	0	
Construction/D&D	0	0	0	0	
Operation	0	0	0	0	
Total Percentage	0	0	0	0	
Pretreatment Activity Costs($)					Totals
Studies/Permitting	0	0	0	0	211,517,258
Design	0	0	0	0	135,392,544
Construction/D&D	0	0	0	0	589,135,599
Operation	0	0	0	0	1,987,993,995
Total Cost	0	0	0	0	2,924,039,396

PRETREATMENT FTE BREAKDOWN	FY37	FY38	FY39	FY40	Totals
Contractor FTE per Pretreatment Activity (FTE)					
STUDIES/PERMITTING - Site Management/Operations	0.0	0.0	0.0	0.0	1,220.0
STUDIES/PERMITTING - Site Infrastructure	0.0	0.0	0.0	0.0	215.3
STUDIES/PERMITTING - National Laboratories	0.0	0.0	0.0	0.0	56.8
STUDIES/PERMITTING - Site Constructors	0.0	0.0	0.0	0.0	0.0
STUDIES/PERMITTING - Architecture/Engineering Contractors	0.0	0.0	0.0	0.0	0.0
STUDIES/PERMITTING - Construction Contractor	0.0	0.0	0.0	0.0	0.0
DESIGN - Site Management/Operations	0.0	0.0	0.0	0.0	164.4
DESIGN - Site Infrastructure	0.0	0.0	0.0	0.0	29.0
DESIGN - National Laboratories	0.0	0.0	0.0	0.0	0.0
DESIGN - Site Constructors	0.0	0.0	0.0	0.0	48.4
DESIGN - Architecture/Engineering Contractors	0.0	0.0	0.0	0.0	564.1
DESIGN - Construction Contractor	0.0	0.0	0.0	0.0	0.0
CONSTRUCTION/D&D - Site Management/Operations	0.0	0.0	0.0	0.0	357.7
CONSTRUCTION/D&D - Site Infrastructure	0.0	0.0	0.0	0.0	63.1
CONSTRUCTION/D&D - National Laboratories	0.0	0.0	0.0	0.0	0.0
CONSTRUCTION/D&D - Site Constructors	0.0	0.0	0.0	0.0	210.4
CONSTRUCTION/D&D - Architecture/Engineering Contractors	0.0	0.0	0.0	0.0	163.6
CONSTRUCTION/D&D - Construction Contractor	0.0	0.0	0.0	0.0	3,465.5
OPERATIONS - Site Management/Operations	0.0	0.0	0.0	0.0	9,656.0
OPERATIONS - Site Infrastructure	0.0	0.0	0.0	0.0	1,704.0
OPERATIONS - National Laboratories	0.0	0.0	0.0	0.0	0.0
OPERATIONS - Site Constructors	0.0	0.0	0.0	0.0	0.0
OPERATIONS - Architecture/Engineering Contractors	0.0	0.0	0.0	0.0	0.0
OPERATIONS - Construction Contractor	0.0	0.0	0.0	0.0	0.0

Worker Category FTE (FTE)	FY37	FY38	FY39	FY40	Totals
Engineer/Management	0.0	0.0	0.0	0.0	5,367.6
Crafts	0.0	0.0	0.0	0.0	2,814.5
Maintenance	0.0	0.0	0.0	0.0	2,896.8
Operators	0.0	0.0	0.0	0.0	4,828.0
Infrastructure	0.0	0.0	0.0	0.0	2,011.4
Total	0.0	0.0	0.0	0.0	17,918.3

FUNCTION - LLWV	FY95	FY96	FY97	FY98	FY99
LLWV Total Costs ($)	56,877,000	48,148,000	38,775,000	73,028,000	129,580,000
Technology Development (Test) Cost	27,787,000	15,886,000	14,506,000	15,514,000	14,756,000
Perform LLW Cold Operations	0	0	0	0	0
Perform LLW Hot Operations First Year (Hot Test)	0	0	0	0	0
Subtotal Test Costs	27,787,000	15,886,000	14,506,000	15,514,000	14,756,000
Test Oversight Costs	2,778,700	1,588,600	1,450,600	1,551,400	1,475,600
Total Test Costs	30,565,700	17,474,600	15,956,600	17,065,400	16,231,600
Grout Cold Standby Costs	4,914,000	2,661,000	1,488,000	227,000	
LLWV Operate Costs ($)	21,397,300	28,012,400	21,330,400	55,735,600	113,348,400

LLWV ACTIVITY COST BREAKDOWN	FY95	FY96	FY97	FY98	FY99
Activity % of LLWV Actual Costs (%)					
Studies/Permitting	100	100	0	0	0
Design	0	0	100	50	40
Construction/D&D	0	0	0	50	60
Operation	0	0	0	0	0
Total Percentage	100	100	100	100	100
LLWV Activity Costs($)					
Studies/Permitting	21,397,300	28,012,400	0	0	0
Design	0	0	21,330,400	27,867,800	45,339,360
Construction/D&D	0	0	0	27,867,800	68,009,040
Operation	0	0	0	0	0
Total Cost	21,397,300	28,012,400	21,330,400	55,735,600	113,348,400

LLWV FTE BREAKDOWN	FY95	FY96	FY97	FY98	FY99
Contractor FTE per LLWV Activity (FTE)					
STUDIES/PERMITTING - Site Management/Operations	123.4	161.6	0.0	0.0	0.0
STUDIES/PERMITTING - Site Infrastructure	21.8	28.5	0.0	0.0	0.0
STUDIES/PERMITTING - National Laboratories	5.7	7.5	0.0	0.0	0.0
STUDIES/PERMITTING - Site Constructors	0.0	0.0	0.0	0.0	0.0
STUDIES/PERMITTING - Architecture/Engineering Contract	0.0	0.0	0.0	0.0	0.0
STUDIES/PERMITTING - Construction Contractor	0.0	0.0	0.0	0.0	0.0
DESIGN - Site Management/Operations	0.0	0.0	25.9	33.8	55.1
DESIGN - Site Infrastructure	0.0	0.0	4.6	6.0	9.7
DESIGN - National Laboratories	0.0	0.0	0.0	0.0	0.0
DESIGN - Site Constructors	0.0	0.0	7.6	10.0	16.2
DESIGN - Architecture/Engineering Contractors	0.0	0.0	88.9	116.1	188.9
DESIGN - Construction Contractor	0.0	0.0	0.0	0.0	0.0
CONSTRUCTION/D&D - Site Management/Operations	0.0	0.0	0.0	16.9	41.3
CONSTRUCTION/D&D - Site Infrastructure	0.0	0.0	0.0	3.0	7.3
CONSTRUCTION/D&D - National Laboratories	0.0	0.0	0.0	0.0	0.0
CONSTRUCTION/D&D - Site Constructors	0.0	0.0	0.0	10.0	24.3
CONSTRUCTION/D&D - Architecture/Engineering Contracto	0.0	0.0	0.0	7.7	18.9
CONSTRUCTION/D&D - Construction Contractor	0.0	0.0	0.0	163.9	400.1
OPERATIONS - Site Management/Operations	0.0	0.0	0.0	0.0	0.0
OPERATIONS - Site Infrastructure	0.0	0.0	0.0	0.0	0.0
OPERATIONS - National Laboratories	0.0	0.0	0.0	0.0	0.0
OPERATIONS - Site Constructors	0.0	0.0	0.0	0.0	0.0
OPERATIONS - Architecture/Engineering Contractors	0.0	0.0	0.0	0.0	0.0
OPERATIONS - Construction Contractor	0.0	0.0	0.0	0.0	0.0

Worker Category FTE (FTE)	FY95	FY96	FY97	FY98	FY99
Engineer/Management	129.2	169.1	122.4	225.3	419.8
Crafts	0.0	0.0	0.0	133.1	324.9
Maintenance	0.0	0.0	0.0	0.0	0.0
Operators	0.0	0.0	0.0	0.0	0.0
Infrastructure	21.8	28.5	4.6	9.0	17.0
Total	150.9	197.6	127.0	367.4	761.7

FUNCTION - LLWV	FY00	FY01	FY02	FY03	FY04
LLWV Total Costs ($)	**171,204,000**	**174,408,000**	**183,955,000**	**164,414,000**	**152,182,000**
Technology Development (Test) Cost	13,757,000	12,939,000	12,026,000	11,461,000	10,127,000
Perform LLW Cold Operations	0	0	0	27,083,000	39,328,000
Perform LLW Hot Operations First Year (Hot Test)	0	0	0	0	0
Subtotal Test Costs	13,757,000	12,939,000	12,026,000	38,544,000	49,455,000
Test Oversight Costs	1,375,700	1,293,900	1,202,600	3,854,400	4,945,500
Total Test Costs	**15,132,700**	**14,232,900**	**13,228,600**	**42,398,400**	**54,400,500**
Grout Cold Standby Costs					
LLWV Operate Costs ($)	**156,071,300**	**160,175,100**	**170,726,400**	**122,015,600**	**97,781,500**

LLWV ACTIVITY COST BREAKDOWN	FY00	FY01	FY02	FY03	FY04
Activity % of LLWV Actual Costs (%)					
Studies/Permitting	0	0	0	0	0
Design	30	30	30	0	0
Construction/D&D	70	70	70	0	0
Operation	0	0	0	100	100
Total Percentage	**100**	**100**	**100**	**100**	**100**
LLWV Activity Costs($)					
Studies/Permitting	0	0	0	0	0
Design	46,821,390	48,052,530	51,217,920	0	0
Construction/D&D	109,249,910	112,122,570	119,508,480	0	0
Operation	0	0	0	122,015,600	97,781,500
Total Cost	**156,071,300**	**160,175,100**	**170,726,400**	**122,015,600**	**97,781,500**

LLWV FTE BREAKDOWN	FY00	FY01	FY02	FY03	FY04
Contractor FTE per LLWV Activity (FTE)					
STUDIES/PERMITTING - Site Management/Operations	0.0	0.0	0.0	0.0	0.0
STUDIES/PERMITTING - Site Infrastructure	0.0	0.0	0.0	0.0	0.0
STUDIES/PERMITTING - National Laboratories	0.0	0.0	0.0	0.0	0.0
STUDIES/PERMITTING - Site Constructors	0.0	0.0	0.0	0.0	0.0
STUDIES/PERMITTING - Architecture/Engineering Contract	0.0	0.0	0.0	0.0	0.0
STUDIES/PERMITTING - Construction Contractor	0.0	0.0	0.0	0.0	0.0
DESIGN - Site Management/Operations	56.9	58.3	62.2	0.0	0.0
DESIGN - Site Infrastructure	10.0	10.3	11.0	0.0	0.0
DESIGN - National Laboratories	0.0	0.0	0.0	0.0	0.0
DESIGN - Site Constructors	16.7	17.2	18.3	0.0	0.0
DESIGN - Architecture/Engineering Contractors	195.1	200.2	213.4	0.0	0.0
DESIGN - Construction Contractor	0.0	0.0	0.0	0.0	0.0
CONSTRUCTION/D&D - Site Management/Operations	66.3	68.1	72.6	0.0	0.0
CONSTRUCTION/D&D - Site Infrastructure	11.7	12.0	12.8	0.0	0.0
CONSTRUCTION/D&D - National Laboratories	0.0	0.0	0.0	0.0	0.0
CONSTRUCTION/D&D - Site Constructors	39.0	40.0	42.7	0.0	0.0
CONSTRUCTION/D&D - Architecture/Engineering Contracto	30.3	31.1	33.2	0.0	0.0
CONSTRUCTION/D&D - Construction Contractor	642.6	659.5	703.0	0.0	0.0
OPERATIONS - Site Management/Operations	0.0	0.0	0.0	592.6	474.9
OPERATIONS - Site Infrastructure	0.0	0.0	0.0	104.6	83.8
OPERATIONS - National Laboratories	0.0	0.0	0.0	0.0	0.0
OPERATIONS - Site Constructors	0.0	0.0	0.0	0.0	0.0
OPERATIONS - Architecture/Engineering Contractors	0.0	0.0	0.0	0.0	0.0
OPERATIONS - Construction Contractor	0.0	0.0	0.0	0.0	0.0

Worker Category FTE (FTE)	FY00	FY01	FY02	FY03	FY04
Engineer/Management	525.1	538.9	574.4	118.5	95.0
Crafts	521.9	535.6	570.9	0.0	0.0
Maintenance	0.0	0.0	0.0	177.8	142.5
Operators	0.0	0.0	0.0	296.3	237.5
Infrastructure	21.7	22.3	23.8	104.6	83.8
Total	**1,068.7**	**1,096.8**	**1,169.1**	**697.2**	**558.8**

FUNCTION - LLWV	FY05	FY06	FY07	FY08	FY09
LLWV Total Costs ($)	164,494,000	228,963,000	236,288,000	239,155,000	246,531,000
Technology Development (Test) Cost	9,810,000	9,810,000	9,810,000	9,760,000	9,711,000
Perform LLW Cold Operations	32,662,000	0	0	0	0
Perform LLW Hot Operations First Year (Hot Test)	44,803,000	0	0	0	0
Subtotal Test Costs	87,275,000	9,810,000	9,810,000	9,760,000	9,711,000
Test Oversight Costs	8,727,500	981,000	981,000	976,000	971,100
Total Test Costs	96,002,500	10,791,000	10,791,000	10,736,000	10,682,100
Grout Cold Standby Costs					
LLWV Operate Costs ($)	68,491,500	218,172,000	225,497,000	228,419,000	235,848,900

LLWV ACTIVITY COST BREAKDOWN	FY05	FY06	FY07	FY08	FY09
Activity % of LLWV Actual Costs (%)					
Studies/Permitting	0	0	0	0	0
Design	0	0	0	0	0
Construction/D&D	0	0	0	0	0
Operation	100	100	100	100	100
Total Percentage	100	100	100	100	100
LLWV Activity Costs($)					
Studies/Permitting	0	0	0	0	0
Design	0	0	0	0	0
Construction/D&D	0	0	0	0	0
Operation	68,491,500	218,172,000	225,497,000	228,419,000	235,848,900
Total Cost	68,491,500	218,172,000	225,497,000	228,419,000	235,848,900

LLWV FTE BREAKDOWN	FY05	FY06	FY07	FY08	FY09
Contractor FTE per LLWV Activity (FTE)					
STUDIES/PERMITTING - Site Management/Operations	0.0	0.0	0.0	0.0	0.0
STUDIES/PERMITTING - Site Infrastructure	0.0	0.0	0.0	0.0	0.0
STUDIES/PERMITTING - National Laboratories	0.0	0.0	0.0	0.0	0.0
STUDIES/PERMITTING - Site Constructors	0.0	0.0	0.0	0.0	0.0
STUDIES/PERMITTING - Architecture/Engineering Contract	0.0	0.0	0.0	0.0	0.0
STUDIES/PERMITTING - Construction Contractor	0.0	0.0	0.0	0.0	0.0
DESIGN - Site Management/Operations	0.0	0.0	0.0	0.0	0.0
DESIGN - Site Infrastructure	0.0	0.0	0.0	0.0	0.0
DESIGN - National Laboratories	0.0	0.0	0.0	0.0	0.0
DESIGN - Site Constructors	0.0	0.0	0.0	0.0	0.0
DESIGN - Architecture/Engineering Contractors	0.0	0.0	0.0	0.0	0.0
DESIGN - Construction Contractor	0.0	0.0	0.0	0.0	0.0
CONSTRUCTION/D&D - Site Management/Operations	0.0	0.0	0.0	0.0	0.0
CONSTRUCTION/D&D - Site Infrastructure	0.0	0.0	0.0	0.0	0.0
CONSTRUCTION/D&D - National Laboratories	0.0	0.0	0.0	0.0	0.0
CONSTRUCTION/D&D - Site Constructors	0.0	0.0	0.0	0.0	0.0
CONSTRUCTION/D&D - Architecture/Engineering Contracto	0.0	0.0	0.0	0.0	0.0
CONSTRUCTION/D&D - Construction Contractor	0.0	0.0	0.0	0.0	0.0
OPERATIONS - Site Management/Operations	332.7	1,059.7	1,095.3	1,109.5	1,145.6
OPERATIONS - Site Infrastructure	58.7	187.0	193.3	195.8	202.2
OPERATIONS - National Laboratories	0.0	0.0	0.0	0.0	0.0
OPERATIONS - Site Constructors	0.0	0.0	0.0	0.0	0.0
OPERATIONS - Architecture/Engineering Contractors	0.0	0.0	0.0	0.0	0.0
OPERATIONS - Construction Contractor	0.0	0.0	0.0	0.0	0.0

Worker Category FTE (FTE)	FY05	FY06	FY07	FY08	FY09
Engineer/Management	66.5	211.9	219.1	221.9	229.1
Crafts	0.0	0.0	0.0	0.0	0.0
Maintenance	99.8	317.9	328.6	332.8	343.7
Operators	166.3	529.8	547.6	554.7	572.8
Infrastructure	58.7	187.0	193.3	195.8	202.2
Total	391.4	1,246.7	1,288.6	1,305.3	1,347.7

FUNCTION - LLWV	FY10	FY11	FY12	FY13	FY14
LLWV Total Costs ($)	246,480,000	246,416,000	246,231,000	246,076,000	240,050,000
Technology Development (Test) Cost	9,660,000	9,596,000	9,486,000	9,427,000	3,730,000
Perform LLW Cold Operations	0	0	0	0	0
Perform LLW Hot Operations First Year (Hot Test)	0	0	0	0	0
Subtotal Test Costs	9,660,000	9,596,000	9,486,000	9,427,000	3,730,000
Test Oversight Costs	966,000	959,600	948,600	942,700	373,000
Total Test Costs	10,626,000	10,555,600	10,434,600	10,369,700	4,103,000
Grout Cold Standby Costs					
LLWV Operate Costs ($)	235,854,000	235,860,400	235,796,400	235,706,300	235,947,000

LLWV ACTIVITY COST BREAKDOWN	FY10	FY11	FY12	FY13	FY14
Activity % of LLWV Actual Costs (%)					
Studies/Permitting	0	0	0	0	0
Design	0	0	0	0	0
Construction/D&D	0	0	0	0	0
Operation	100	100	100	100	100
Total Percentage	100	100	100	100	100
LLWV Activity Costs($)					
Studies/Permitting	0	0	0	0	0
Design	0	0	0	0	0
Construction/D&D	0	0	0	0	0
Operation	235,854,000	235,860,400	235,796,400	235,706,300	235,947,000
Total Cost	235,854,000	235,860,400	235,796,400	235,706,300	235,947,000

LLWV FTE BREAKDOWN	FY10	FY11	FY12	FY13	FY14
Contractor FTE per LLWV Activity (FTE)					
STUDIES/PERMITTING - Site Management/Operations	0.0	0.0	0.0	0.0	0.0
STUDIES/PERMITTING - Site Infrastructure	0.0	0.0	0.0	0.0	0.0
STUDIES/PERMITTING - National Laboratories	0.0	0.0	0.0	0.0	0.0
STUDIES/PERMITTING - Site Constructors	0.0	0.0	0.0	0.0	0.0
STUDIES/PERMITTING - Architecture/Engineering Contract	0.0	0.0	0.0	0.0	0.0
STUDIES/PERMITTING - Construction Contractor	0.0	0.0	0.0	0.0	0.0
DESIGN - Site Management/Operations	0.0	0.0	0.0	0.0	0.0
DESIGN - Site Infrastructure	0.0	0.0	0.0	0.0	0.0
DESIGN - National Laboratories	0.0	0.0	0.0	0.0	0.0
DESIGN - Site Constructors	0.0	0.0	0.0	0.0	0.0
DESIGN - Architecture/Engineering Contractors	0.0	0.0	0.0	0.0	0.0
DESIGN - Construction Contractor	0.0	0.0	0.0	0.0	0.0
CONSTRUCTION/D&D - Site Management/Operations	0.0	0.0	0.0	0.0	0.0
CONSTRUCTION/D&D - Site Infrastructure	0.0	0.0	0.0	0.0	0.0
CONSTRUCTION/D&D - National Laboratories	0.0	0.0	0.0	0.0	0.0
CONSTRUCTION/D&D - Site Constructors	0.0	0.0	0.0	0.0	0.0
CONSTRUCTION/D&D - Architecture/Engineering Contracto	0.0	0.0	0.0	0.0	0.0
CONSTRUCTION/D&D - Construction Contractor	0.0	0.0	0.0	0.0	0.0
OPERATIONS - Site Management/Operations	1,145.6	1,145.6	1,145.3	1,144.9	1,146.0
OPERATIONS - Site Infrastructure	202.2	202.2	202.1	202.0	202.2
OPERATIONS - National Laboratories	0.0	0.0	0.0	0.0	0.0
OPERATIONS - Site Constructors	0.0	0.0	0.0	0.0	0.0
OPERATIONS - Architecture/Engineering Contractors	0.0	0.0	0.0	0.0	0.0
OPERATIONS - Construction Contractor	0.0	0.0	0.0	0.0	0.0

Worker Category FTE (FTE)	FY10	FY11	FY12	FY13	FY14
Engineer/Management	229.1	229.1	229.1	229.0	229.2
Crafts	0.0	0.0	0.0	0.0	0.0
Maintenance	343.7	343.7	343.6	343.5	343.8
Operators	572.8	572.8	572.6	572.4	573.0
Infrastructure	202.2	202.2	202.1	202.0	202.2
Total	1,347.7	1,347.8	1,347.4	1,346.9	1,348.3

FUNCTION - LLWV	FY15	FY16	FY17	FY18	FY19
LLWV Total Costs ($)	236,112,000	233,169,000	225,233,000	222,435,000	214,620,000
Technology Development (Test) Cost	107,000	88,000	30,000	0	0
Perform LLW Cold Operations	0	0	0	0	0
Perform LLW Hot Operations First Year (Hot Test)	0	0	0	0	0
Subtotal Test Costs	107,000	88,000	30,000	0	0
Test Oversight Costs	10,700	8,800	3,000	0	0
Total Test Costs	117,700	96,800	33,000	0	0
Grout Cold Standby Costs					
LLWV Operate Costs ($)	235,994,300	233,072,200	225,200,000	222,435,000	214,620,000

LLWV ACTIVITY COST BREAKDOWN	FY15	FY16	FY17	FY18	FY19
Activity % of LLWV Actual Costs (%)					
Studies/Permitting	0	0	0	0	0
Design	0	0	0	0	0
Construction/D&D	0	0	0	0	0
Operation	100	100	100	100	100
Total Percentage	100	100	100	100	100
LLWV Activity Costs($)					
Studies/Permitting	0	0	0	0	0
Design	0	0	0	0	0
Construction/D&D	0	0	0	0	0
Operation	235,994,300	233,072,200	225,200,000	222,435,000	214,620,000
Total Cost	235,994,300	233,072,200	225,200,000	222,435,000	214,620,000

LLWV FTE BREAKDOWN	FY15	FY16	FY17	FY18	FY19
Contractor FTE per LLWV Activity (FTE)					
STUDIES/PERMITTING - Site Management/Operations	0.0	0.0	0.0	0.0	0.0
STUDIES/PERMITTING - Site Infrastructure	0.0	0.0	0.0	0.0	0.0
STUDIES/PERMITTING - National Laboratories	0.0	0.0	0.0	0.0	0.0
STUDIES/PERMITTING - Site Constructors	0.0	0.0	0.0	0.0	0.0
STUDIES/PERMITTING - Architecture/Engineering Contract	0.0	0.0	0.0	0.0	0.0
STUDIES/PERMITTING - Construction Contractor	0.0	0.0	0.0	0.0	0.0
DESIGN - Site Management/Operations	0.0	0.0	0.0	0.0	0.0
DESIGN - Site Infrastructure	0.0	0.0	0.0	0.0	0.0
DESIGN - National Laboratories	0.0	0.0	0.0	0.0	0.0
DESIGN - Site Constructors	0.0	0.0	0.0	0.0	0.0
DESIGN - Architecture/Engineering Contractors	0.0	0.0	0.0	0.0	0.0
DESIGN - Construction Contractor	0.0	0.0	0.0	0.0	0.0
CONSTRUCTION/D&D - Site Management/Operations	0.0	0.0	0.0	0.0	0.0
CONSTRUCTION/D&D - Site Infrastructure	0.0	0.0	0.0	0.0	0.0
CONSTRUCTION/D&D - National Laboratories	0.0	0.0	0.0	0.0	0.0
CONSTRUCTION/D&D - Site Constructors	0.0	0.0	0.0	0.0	0.0
CONSTRUCTION/D&D - Architecture/Engineering Contracto	0.0	0.0	0.0	0.0	0.0
CONSTRUCTION/D&D - Construction Contractor	0.0	0.0	0.0	0.0	0.0
OPERATIONS - Site Management/Operations	1,146.3	1,132.1	1,093.8	1,080.4	1,042.4
OPERATIONS - Site Infrastructure	202.3	199.8	193.0	190.7	184.0
OPERATIONS - National Laboratories	0.0	0.0	0.0	0.0	0.0
OPERATIONS - Site Constructors	0.0	0.0	0.0	0.0	0.0
OPERATIONS - Architecture/Engineering Contractors	0.0	0.0	0.0	0.0	0.0
OPERATIONS - Construction Contractor	0.0	0.0	0.0	0.0	0.0

Worker Category FTE (FTE)	FY15	FY16	FY17	FY18	FY19
Engineer/Management	229.3	226.4	218.8	216.1	208.5
Crafts	0.0	0.0	0.0	0.0	0.0
Maintenance	343.9	339.6	328.1	324.1	312.7
Operators	573.1	566.0	546.9	540.2	521.2
Infrastructure	202.3	199.8	193.0	190.7	184.0
Total	1,348.5	1,331.8	1,286.9	1,271.1	1,226.4

FUNCTION - LLWV	FY20	FY21	FY22	FY23	FY24
LLWV Total Costs ($)	**211,467,000**	**202,185,000**	**455,098,000**	**461,714,000**	**312,466,000**
Technology Development (Test) Cost	0	0	0	0	0
Perform LLW Cold Operations	0	0	0	0	0
Perform LLW Hot Operations First Year (Hot Test)	0	0	0	0	0
Subtotal Test Costs	0	0	0	0	0
Test Oversight Costs	0	0	0	0	0
Total Test Costs	**0**	**0**	**0**	**0**	**0**
Grout Cold Standby Costs					
LLWV Operate Costs ($)	**211,467,000**	**202,185,000**	**455,098,000**	**461,714,000**	**312,466,000**

LLWV ACTIVITY COST BREAKDOWN	FY20	FY21	FY22	FY23	FY24
Activity % of LLWV Actual Costs (%)					
Studies/Permitting	0	0	0	0	0
Design	0	0	0	0	0
Construction/D&D	0	0	100	100	100
Operation	100	100	0	0	0
Total Percentage	**100**	**100**	**100**	**100**	**100**
LLWV Activity Costs($)					
Studies/Permitting	0	0	0	0	0
Design	0	0	0	0	0
Construction/D&D	0	0	455,098,000	461,714,000	312,466,000
Operation	211,467,000	202,185,000	0	0	0
Total Cost	**211,467,000**	**202,185,000**	**455,098,000**	**461,714,000**	**312,466,000**

LLWV FTE BREAKDOWN	FY20	FY21	FY22	FY23	FY24
Contractor FTE per LLWV Activity (FTE)					
STUDIES/PERMITTING - Site Management/Operations	0.0	0.0	0.0	0.0	0.0
STUDIES/PERMITTING - Site Infrastructure	0.0	0.0	0.0	0.0	0.0
STUDIES/PERMITTING - National Laboratories	0.0	0.0	0.0	0.0	0.0
STUDIES/PERMITTING - Site Constructors	0.0	0.0	0.0	0.0	0.0
STUDIES/PERMITTING - Architecture/Engineering Contract	0.0	0.0	0.0	0.0	0.0
STUDIES/PERMITTING - Construction Contractor	0.0	0.0	0.0	0.0	0.0
DESIGN - Site Management/Operations	0.0	0.0	0.0	0.0	0.0
DESIGN - Site Infrastructure	0.0	0.0	0.0	0.0	0.0
DESIGN - National Laboratories	0.0	0.0	0.0	0.0	0.0
DESIGN - Site Constructors	0.0	0.0	0.0	0.0	0.0
DESIGN - Architecture/Engineering Contractors	0.0	0.0	0.0	0.0	0.0
DESIGN - Construction Contractor	0.0	0.0	0.0	0.0	0.0
CONSTRUCTION/D&D - Site Management/Operations	0.0	0.0	276.3	280.3	189.7
CONSTRUCTION/D&D - Site Infrastructure	0.0	0.0	48.8	49.5	33.5
CONSTRUCTION/D&D - National Laboratories	0.0	0.0	0.0	0.0	0.0
CONSTRUCTION/D&D - Site Constructors	0.0	0.0	162.5	164.9	111.6
CONSTRUCTION/D&D - Architecture/Engineering Contracto	0.0	0.0	126.4	128.3	86.8
CONSTRUCTION/D&D - Construction Contractor	0.0	0.0	2,677.0	2,716.0	1,838.0
OPERATIONS - Site Management/Operations	1,027.1	982.0	0.0	0.0	0.0
OPERATIONS - Site Infrastructure	181.3	173.3	0.0	0.0	0.0
OPERATIONS - National Laboratories	0.0	0.0	0.0	0.0	0.0
OPERATIONS - Site Constructors	0.0	0.0	0.0	0.0	0.0
OPERATIONS - Architecture/Engineering Contractors	0.0	0.0	0.0	0.0	0.0
OPERATIONS - Construction Contractor	0.0	0.0	0.0	0.0	0.0

Worker Category FTE (FTE)	FY20	FY21	FY22	FY23	FY24
Engineer/Management	205.4	196.4	1,068.2	1,083.7	733.4
Crafts	0.0	0.0	2,174.1	2,205.8	1,492.7
Maintenance	308.1	294.6	0.0	0.0	0.0
Operators	513.6	491.0	0.0	0.0	0.0
Infrastructure	181.3	173.3	48.8	49.5	33.5
Total	**1,208.4**	**1,155.3**	**3,291.1**	**3,338.9**	**2,259.6**

FUNCTION - LLWV	FY25	FY26	FY27	FY28	FY29
LLWV Total Costs ($)	**160,092,000**	**27,063,000**	**607,000**	**64,000**	**0**
Technology Development (Test) Cost	0	0	0	0	0
Perform LLW Cold Operations	0	0	0	0	0
Perform LLW Hot Operations First Year (Hot Test)	0	0	0	0	0
Subtotal Test Costs	0	0	0	0	0
Test Oversight Costs	0	0	0	0	0
Total Test Costs	**0**	**0**	**0**	**0**	**0**
Grout Cold Standby Costs					
LLWV Operate Costs ($)	**160,092,000**	**27,063,000**	**607,000**	**64,000**	**0**

LLWV ACTIVITY COST BREAKDOWN	FY25	FY26	FY27	FY28	FY29
Activity % of LLWV Actual Costs (%)					
Studies/Permitting	0	0	0	0	0
Design	0	0	0	0	0
Construction/D&D	100	100	100	100	0
Operation	0	0	0	0	0
Total Percentage	**100**	**100**	**100**	**100**	**0**
LLWV Activity Costs($)					
Studies/Permitting	0	0	0	0	0
Design	0	0	0	0	0
Construction/D&D	160,092,000	27,063,000	607,000	64,000	0
Operation	0	0	0	0	0
Total Cost	**160,092,000**	**27,063,000**	**607,000**	**64,000**	**0**

LLWV FTE BREAKDOWN	FY25	FY26	FY27	FY28	FY29
Contractor FTE per LLWV Activity (FTE)					
STUDIES/PERMITTING - Site Management/Operations	0.0	0.0	0.0	0.0	0.0
STUDIES/PERMITTING - Site Infrastructure	0.0	0.0	0.0	0.0	0.0
STUDIES/PERMITTING - National Laboratories	0.0	0.0	0.0	0.0	0.0
STUDIES/PERMITTING - Site Constructors	0.0	0.0	0.0	0.0	0.0
STUDIES/PERMITTING - Architecture/Engineering Contract	0.0	0.0	0.0	0.0	0.0
STUDIES/PERMITTING - Construction Contractor	0.0	0.0	0.0	0.0	0.0
DESIGN - Site Management/Operations	0.0	0.0	0.0	0.0	0.0
DESIGN - Site Infrastructure	0.0	0.0	0.0	0.0	0.0
DESIGN - National Laboratories	0.0	0.0	0.0	0.0	0.0
DESIGN - Site Constructors	0.0	0.0	0.0	0.0	0.0
DESIGN - Architecture/Engineering Contractors	0.0	0.0	0.0	0.0	0.0
DESIGN - Construction Contractor	0.0	0.0	0.0	0.0	0.0
CONSTRUCTION/D&D - Site Management/Operations	97.2	16.4	0.4	0.0	0.0
CONSTRUCTION/D&D - Site Infrastructure	17.2	2.9	0.1	0.0	0.0
CONSTRUCTION/D&D - National Laboratories	0.0	0.0	0.0	0.0	0.0
CONSTRUCTION/D&D - Site Constructors	57.2	9.7	0.2	0.0	0.0
CONSTRUCTION/D&D - Architecture/Engineering Contracto	44.5	7.5	0.2	0.0	0.0
CONSTRUCTION/D&D - Construction Contractor	941.7	159.2	3.6	0.4	0.0
OPERATIONS - Site Management/Operations	0.0	0.0	0.0	0.0	0.0
OPERATIONS - Site Infrastructure	0.0	0.0	0.0	0.0	0.0
OPERATIONS - National Laboratories	0.0	0.0	0.0	0.0	0.0
OPERATIONS - Site Constructors	0.0	0.0	0.0	0.0	0.0
OPERATIONS - Architecture/Engineering Contractors	0.0	0.0	0.0	0.0	0.0
OPERATIONS - Construction Contractor	0.0	0.0	0.0	0.0	0.0

Worker Category FTE (FTE)	FY25	FY26	FY27	FY28	FY29
Engineer/Management	375.8	63.5	1.4	0.2	0.0
Crafts	764.8	129.3	2.9	0.3	0.0
Maintenance	0.0	0.0	0.0	0.0	0.0
Operators	0.0	0.0	0.0	0.0	0.0
Infrastructure	17.2	2.9	0.1	0.0	0.0
Total	**1,157.7**	**195.7**	**4.4**	**0.5**	**0.0**

FUNCTION - LLWV	FY30	FY31	FY32	FY33	FY34	FY35
LLWV Total Costs ($)	0	0	0	0	0	0
Technology Development (Test) Cost	0	0	0	0	0	0
Perform LLW Cold Operations	0	0	0	0	0	0
Perform LLW Hot Operations First Year (Hot Test)	0	0	0	0	0	0
Subtotal Test Costs	0	0	0	0	0	0
Test Oversight Costs	0	0	0	0	0	0
Total Test Costs	0	0	0	0	0	0
Grout Cold Standby Costs						
LLWV Operate Costs ($)	0	0	0	0	0	0

LLWV ACTIVITY COST BREAKDOWN	FY30	FY31	FY32	FY33	FY34	FY35
Activity % of LLWV Actual Costs (%)						
Studies/Permitting	0	0	0	0	0	0
Design	0	0	0	0	0	0
Construction/D&D	0	0	0	0	0	0
Operation	0	0	0	0	0	0
Total Percentage	0	0	0	0	0	0
LLWV Activity Costs($)						
Studies/Permitting	0	0	0	0	0	0
Design	0	0	0	0	0	0
Construction/D&D	0	0	0	0	0	0
Operation	0	0	0	0	0	0
Total Cost	0	0	0	0	0	0

LLWV FTE BREAKDOWN	FY30	FY31	FY32	FY33	FY34	FY35
Contractor FTE per LLWV Activity (FTE)						
STUDIES/PERMITTING - Site Management/Operations	0.0	0.0	0.0	0.0	0.0	0.0
STUDIES/PERMITTING - Site Infrastructure	0.0	0.0	0.0	0.0	0.0	0.0
STUDIES/PERMITTING - National Laboratories	0.0	0.0	0.0	0.0	0.0	0.0
STUDIES/PERMITTING - Site Constructors	0.0	0.0	0.0	0.0	0.0	0.0
STUDIES/PERMITTING - Architecture/Engineering Contract	0.0	0.0	0.0	0.0	0.0	0.0
STUDIES/PERMITTING - Construction Contractor	0.0	0.0	0.0	0.0	0.0	0.0
DESIGN - Site Management/Operations	0.0	0.0	0.0	0.0	0.0	0.0
DESIGN - Site Infrastructure	0.0	0.0	0.0	0.0	0.0	0.0
DESIGN - National Laboratories	0.0	0.0	0.0	0.0	0.0	0.0
DESIGN - Site Constructors	0.0	0.0	0.0	0.0	0.0	0.0
DESIGN - Architecture/Engineering Contractors	0.0	0.0	0.0	0.0	0.0	0.0
DESIGN - Construction Contractor	0.0	0.0	0.0	0.0	0.0	0.0
CONSTRUCTION/D&D - Site Management/Operations	0.0	0.0	0.0	0.0	0.0	0.0
CONSTRUCTION/D&D - Site Infrastructure	0.0	0.0	0.0	0.0	0.0	0.0
CONSTRUCTION/D&D - National Laboratories	0.0	0.0	0.0	0.0	0.0	0.0
CONSTRUCTION/D&D - Site Constructors	0.0	0.0	0.0	0.0	0.0	0.0
CONSTRUCTION/D&D - Architecture/Engineering Contracto	0.0	0.0	0.0	0.0	0.0	0.0
CONSTRUCTION/D&D - Construction Contractor	0.0	0.0	0.0	0.0	0.0	0.0
OPERATIONS - Site Management/Operations	0.0	0.0	0.0	0.0	0.0	0.0
OPERATIONS - Site Infrastructure	0.0	0.0	0.0	0.0	0.0	0.0
OPERATIONS - National Laboratories	0.0	0.0	0.0	0.0	0.0	0.0
OPERATIONS - Site Constructors	0.0	0.0	0.0	0.0	0.0	0.0
OPERATIONS - Architecture/Engineering Contractors	0.0	0.0	0.0	0.0	0.0	0.0
OPERATIONS - Construction Contractor	0.0	0.0	0.0	0.0	0.0	0.0

Worker Category FTE (FTE)	FY30	FY31	FY32	FY33	FY34	FY35
Engineer/Management	0.0	0.0	0.0	0.0	0.0	0.0
Crafts	0.0	0.0	0.0	0.0	0.0	0.0
Maintenance	0.0	0.0	0.0	0.0	0.0	0.0
Operators	0.0	0.0	0.0	0.0	0.0	0.0
Infrastructure	0.0	0.0	0.0	0.0	0.0	0.0
Total	0.0	0.0	0.0	0.0	0.0	0.0

FUNCTION - LLWV	FY36	FY37	FY38	FY39	FY40
LLWV Total Costs ($)	0	0	0	0	0
Technology Development (Test) Cost	0	0	0	0	0
Perform LLW Cold Operations	0	0	0	0	0
Perform LLW Hot Operations First Year (Hot Test)	0	0	0	0	0
Subtotal Test Costs	0	0	0	0	0
Test Oversight Costs	0	0	0	0	0
Total Test Costs	0	0	0	0	0
Grout Cold Standby Costs					
LLWV Operate Costs ($)	0	0	0	0	0

LLWV ACTIVITY COST BREAKDOWN	FY36	FY37	FY38	FY39	FY40
Activity % of LLWV Actual Costs (%)					
Studies/Permitting	0	0	0	0	0
Design	0	0	0	0	0
Construction/D&D	0	0	0	0	0
Operation	0	0	0	0	0
Total Percentage	0	0	0	0	0
LLWV Activity Costs($)					
Studies/Permitting	0	0	0	0	0
Design	0	0	0	0	0
Construction/D&D	0	0	0	0	0
Operation	0	0	0	0	0
Total Cost	0	0	0	0	0

LLWV FTE BREAKDOWN	FY36	FY37	FY38	FY39	FY40
Contractor FTE per LLWV Activity (FTE)					
STUDIES/PERMITTING - Site Management/Operations	0.0	0.0	0.0	0.0	0.0
STUDIES/PERMITTING - Site Infrastructure	0.0	0.0	0.0	0.0	0.0
STUDIES/PERMITTING - National Laboratories	0.0	0.0	0.0	0.0	0.0
STUDIES/PERMITTING - Site Constructors	0.0	0.0	0.0	0.0	0.0
STUDIES/PERMITTING - Architecture/Engineering Contract	0.0	0.0	0.0	0.0	0.0
STUDIES/PERMITTING - Construction Contractor	0.0	0.0	0.0	0.0	0.0
DESIGN - Site Management/Operations	0.0	0.0	0.0	0.0	0.0
DESIGN - Site Infrastructure	0.0	0.0	0.0	0.0	0.0
DESIGN - National Laboratories	0.0	0.0	0.0	0.0	0.0
DESIGN - Site Constructors	0.0	0.0	0.0	0.0	0.0
DESIGN - Architecture/Engineering Contractors	0.0	0.0	0.0	0.0	0.0
DESIGN - Construction Contractor	0.0	0.0	0.0	0.0	0.0
CONSTRUCTION/D&D - Site Management/Operations	0.0	0.0	0.0	0.0	0.0
CONSTRUCTION/D&D - Site Infrastructure	0.0	0.0	0.0	0.0	0.0
CONSTRUCTION/D&D - National Laboratories	0.0	0.0	0.0	0.0	0.0
CONSTRUCTION/D&D - Site Constructors	0.0	0.0	0.0	0.0	0.0
CONSTRUCTION/D&D - Architecture/Engineering Contracto	0.0	0.0	0.0	0.0	0.0
CONSTRUCTION/D&D - Construction Contractor	0.0	0.0	0.0	0.0	0.0
OPERATIONS - Site Management/Operations	0.0	0.0	0.0	0.0	0.0
OPERATIONS - Site Infrastructure	0.0	0.0	0.0	0.0	0.0
OPERATIONS - National Laboratories	0.0	0.0	0.0	0.0	0.0
OPERATIONS - Site Constructors	0.0	0.0	0.0	0.0	0.0
OPERATIONS - Architecture/Engineering Contractors	0.0	0.0	0.0	0.0	0.0
OPERATIONS - Construction Contractor	0.0	0.0	0.0	0.0	0.0

Worker Category FTE (FTE)	FY36	FY37	FY38	FY39	FY40
Engineer/Management	0.0	0.0	0.0	0.0	0.0
Crafts	0.0	0.0	0.0	0.0	0.0
Maintenance	0.0	0.0	0.0	0.0	0.0
Operators	0.0	0.0	0.0	0.0	0.0
Infrastructure	0.0	0.0	0.0	0.0	0.0
Total	0.0	0.0	0.0	0.0	0.0

FUNCTION - LLWV	Totals
LLWV Total Costs ($)	6,495,580,000
Technology Development (Test) Cost	239,784,000
Perform LLW Cold Operations	99,073,000
Perform LLW Hot Operations First Year (Hot Test)	44,803,000
Subtotal Test Costs	383,660,000
Test Oversight Costs	38,366,000
Total Test Costs	422,026,000
Grout Cold Standby Costs	
LLWV Operate Costs ($)	6,064,264,000

LLWV ACTIVITY COST BREAKDOWN

Activity % of LLWV Actual Costs (%)	
Studies/Permitting	
Design	
Construction/D&D	
Operation	
Total Percentage	

LLWV Activity Costs($)	Totals
Studies/Permitting	49,409,700
Design	240,629,400
Construction/D&D	1,853,861,800
Operation	3,920,363,100
Total Cost	6,064,264,000

LLWV FTE BREAKDOWN	Totals
Contractor FTE per LLWV Activity (FTE)	
STUDIES/PERMITTING - Site Management/Operations	285.0
STUDIES/PERMITTING - Site Infrastructure	50.3
STUDIES/PERMITTING - National Laboratories	13.3
STUDIES/PERMITTING - Site Constructors	0.0
STUDIES/PERMITTING - Architecture/Engineering Contract	0.0
STUDIES/PERMITTING - Construction Contractor	0.0
DESIGN - Site Management/Operations	292.2
DESIGN - Site Infrastructure	51.6
DESIGN - National Laboratories	0.0
DESIGN - Site Constructors	85.9
DESIGN - Architecture/Engineering Contractors	1,002.6
DESIGN - Construction Contractor	0.0
CONSTRUCTION/D&D - Site Management/Operations	1,125.6
CONSTRUCTION/D&D - Site Infrastructure	198.6
CONSTRUCTION/D&D - National Laboratories	0.0
CONSTRUCTION/D&D - Site Constructors	662.1
CONSTRUCTION/D&D - Architecture/Engineering Contracto	515.0
CONSTRUCTION/D&D - Construction Contractor	10,905.1
OPERATIONS - Site Management/Operations	19,041.8
OPERATIONS - Site Infrastructure	3,360.3
OPERATIONS - National Laboratories	0.0
OPERATIONS - Site Constructors	0.0
OPERATIONS - Architecture/Engineering Contractors	0.0
OPERATIONS - Construction Contractor	0.0

Worker Category FTE (FTE)	Totals
Engineer/Management	9,838.6
Crafts	8,856.5
Maintenance	5,712.5
Operators	9,520.9
Infrastructure	3,660.8
Total	37,589.2

FUNCTION - HLWV	FY95	FY96	FY97	FY98	FY99
HLWV Total Costs ($)	**25,405,738**	**23,238,012**	**27,889,166**	**41,967,640**	**67,576,624**
Technology Development (Test) Cost	13,582,327	17,101,894	15,321,558	1,124,209	0
Perform HLW Hot Operations First Year (Hot Test)	0	0	0	0	0
Perform HLW Cold Operations	0	0	0	0	0
Subtotal Test Costs	13,582,327	17,101,894	15,321,558	1,124,209	0
Test Oversight Costs	0	0	0	0	0
Total Test Costs	**13,582,327**	**17,101,894**	**15,321,558**	**1,124,209**	**0**
HWVP B/O	**4,749,240**				
Canister Disposal B/O					
HLWV Operate Costs ($)	**7,074,171**	**6,136,118**	**12,567,608**	**40,843,431**	**67,576,624**

HLWV ACTIVITY COST BREAKDOWN	FY95	FY96	FY97	FY98	FY99
Activity % of HLWV Actual Costs (%)					
Studies/Permitting	100	100	100	100	0
Design	0	0	0	0	100
Construction/D&D	0	0	0	0	0
Operation	0	0	0	0	0
Total Percentage	**100**	**100**	**100**	**100**	**100**
HLWV Activity Costs($)					
Studies/Permitting	7,074,171	6,136,118	12,567,608	40,843,431	0
Design	0	0	0	0	67,576,624
Construction/D&D	0	0	0	0	0
Operation	0	0	0	0	0
Total Cost	**7,074,171**	**6,136,118**	**12,567,608**	**40,843,431**	**67,576,624**

HLWV FTE BREAKDOWN	FY95	FY96	FY97	FY98	FY99
Contractor FTE per HLWV Activity (FTE)					
STUDIES/PERMITTING - Site Management/Operations	40.8	35.4	72.5	235.6	0.0
STUDIES/PERMITTING - Site Infrastructure	7.2	6.2	12.8	41.6	0.0
STUDIES/PERMITTING - National Laboratories	1.9	1.6	3.4	11.0	0.0
STUDIES/PERMITTING - Site Constructors	0.0	0.0	0.0	0.0	0.0
STUDIES/PERMITTING - Architecture/Engineering Contract	0.0	0.0	0.0	0.0	0.0
STUDIES/PERMITTING - Construction Contractor	0.0	0.0	0.0	0.0	0.0
DESIGN - Site Management/Operations	0.0	0.0	0.0	0.0	82.1
DESIGN - Site Infrastructure	0.0	0.0	0.0	0.0	14.5
DESIGN - National Laboratories	0.0	0.0	0.0	0.0	0.0
DESIGN - Site Constructors	0.0	0.0	0.0	0.0	24.1
DESIGN - Architecture/Engineering Contractors	0.0	0.0	0.0	0.0	281.6
DESIGN - Construction Contractor	0.0	0.0	0.0	0.0	0.0
CONSTRUCTION/D&D - Site Management/Operations	0.0	0.0	0.0	0.0	0.0
CONSTRUCTION/D&D - Site Infrastructure	0.0	0.0	0.0	0.0	0.0
CONSTRUCTION/D&D - National Laboratories	0.0	0.0	0.0	0.0	0.0
CONSTRUCTION/D&D - Site Constructors	0.0	0.0	0.0	0.0	0.0
CONSTRUCTION/D&D - Architecture/Engineering Contracto	0.0	0.0	0.0	0.0	0.0
CONSTRUCTION/D&D - Construction Contractor	0.0	0.0	0.0	0.0	0.0
OPERATIONS - Site Management/Operations	0.0	0.0	0.0	0.0	0.0
OPERATIONS - Site Infrastructure	0.0	0.0	0.0	0.0	0.0
OPERATIONS - National Laboratories	0.0	0.0	0.0	0.0	0.0
OPERATIONS - Site Constructors	0.0	0.0	0.0	0.0	0.0
OPERATIONS - Architecture/Engineering Contractors	0.0	0.0	0.0	0.0	0.0
OPERATIONS - Construction Contractor	0.0	0.0	0.0	0.0	0.0

Worker Category FTE (FTE)	FY95	FY96	FY97	FY98	FY99
Engineer/Management	42.7	37.0	75.9	246.5	387.8
Crafts	0.0	0.0	0.0	0.0	0.0
Maintenance	0.0	0.0	0.0	0.0	0.0
Operators	0.0	0.0	0.0	0.0	0.0
Infrastructure	7.2	6.2	12.8	41.6	14.5
Total	**49.9**	**43.3**	**88.7**	**288.1**	**402.2**

FUNCTION - HLWV	FY00	FY01	FY02	FY03	FY04
HLWV Total Costs ($)	128,637,568	222,985,760	386,248,512	349,126,368	278,753,856
Technology Development (Test) Cost	0	0	0	0	0
Perform HLW Hot Operations First Year (Hot Test)	0	0	0	0	0
Perform HLW Cold Operations	0	0	0	0	857,272
Subtotal Test Costs	0	0	0	0	857,272
Test Oversight Costs	0	0	0	0	0
Total Test Costs	0	0	0	0	857,272
HWVP B/O					
Canister Disposal B/O					
HLWV Operate Costs ($)	128,637,568	222,985,760	386,248,512	349,126,368	277,896,584

HLWV ACTIVITY COST BREAKDOWN	FY00	FY01	FY02	FY03	FY04
Activity % of HLWV Actual Costs (%)					
Studies/Permitting	0	0	0	0	0
Design	100	80	50	50	0
Construction/D&D	0	20	50	50	100
Operation	0	0	0	0	0
Total Percentage	100	100	100	100	100
HLWV Activity Costs($)					
Studies/Permitting	0	0	0	0	0
Design	128,637,568	178,388,608	193,124,256	174,563,184	0
Construction/D&D	0	44,597,152	193,124,256	174,563,184	277,896,584
Operation	0	0	0	0	0
Total Cost	128,637,568	222,985,760	386,248,512	349,126,368	277,896,584

HLWV FTE BREAKDOWN	FY00	FY01	FY02	FY03	FY04
Contractor FTE per HLWV Activity (FTE)					
STUDIES/PERMITTING - Site Management/Operations	0.0	0.0	0.0	0.0	0.0
STUDIES/PERMITTING - Site Infrastructure	0.0	0.0	0.0	0.0	0.0
STUDIES/PERMITTING - National Laboratories	0.0	0.0	0.0	0.0	0.0
STUDIES/PERMITTING - Site Constructors	0.0	0.0	0.0	0.0	0.0
STUDIES/PERMITTING - Architecture/Engineering Contract	0.0	0.0	0.0	0.0	0.0
STUDIES/PERMITTING - Construction Contractor	0.0	0.0	0.0	0.0	0.0
DESIGN - Site Management/Operations	156.2	216.6	234.5	212.0	0.0
DESIGN - Site Infrastructure	27.6	38.2	41.4	37.4	0.0
DESIGN - National Laboratories	0.0	0.0	0.0	0.0	0.0
DESIGN - Site Constructors	45.9	63.7	69.0	62.3	0.0
DESIGN - Architecture/Engineering Contractors	536.0	743.3	804.7	727.3	0.0
DESIGN - Construction Contractor	0.0	0.0	0.0	0.0	0.0
CONSTRUCTION/D&D - Site Management/Operations	0.0	27.1	117.3	106.0	168.7
CONSTRUCTION/D&D - Site Infrastructure	0.0	4.8	20.7	18.7	29.8
CONSTRUCTION/D&D - National Laboratories	0.0	0.0	0.0	0.0	0.0
CONSTRUCTION/D&D - Site Constructors	0.0	15.9	69.0	62.3	99.2
CONSTRUCTION/D&D - Architecture/Engineering Contracto	0.0	12.4	53.6	48.5	77.2
CONSTRUCTION/D&D - Construction Contractor	0.0	262.3	1,136.0	1,026.8	1,634.7
OPERATIONS - Site Management/Operations	0.0	0.0	0.0	0.0	0.0
OPERATIONS - Site Infrastructure	0.0	0.0	0.0	0.0	0.0
OPERATIONS - National Laboratories	0.0	0.0	0.0	0.0	0.0
OPERATIONS - Site Constructors	0.0	0.0	0.0	0.0	0.0
OPERATIONS - Architecture/Engineering Contractors	0.0	0.0	0.0	0.0	0.0
OPERATIONS - Construction Contractor	0.0	0.0	0.0	0.0	0.0

Worker Category FTE (FTE)	FY00	FY01	FY02	FY03	FY04
Engineer/Management	738.1	1,128.3	1,561.4	1,411.4	652.3
Crafts	0.0	213.1	922.6	833.9	1,327.6
Maintenance	0.0	0.0	0.0	0.0	0.0
Operators	0.0	0.0	0.0	0.0	0.0
Infrastructure	27.6	43.0	62.1	56.1	29.8
Total	765.7	1,384.3	2,546.1	2,301.4	2,009.6

FUNCTION - HLWV	FY05	FY06	FY07	FY08	FY09
HLWV Total Costs ($)	284,698,656	306,689,920	242,762,816	171,718,656	78,623,656
Technology Development (Test) Cost	0	0	0	0	0
Perform HLW Hot Operations First Year (Hot Test)	0	0	0	0	0
Perform HLW Cold Operations	16,282,120	36,334,800	58,298,612	78,584,160	6,753,131
Subtotal Test Costs	16,282,120	36,334,800	58,298,612	78,584,160	6,753,131
Test Oversight Costs	0	0	0	0	0
Total Test Costs	16,282,120	36,334,800	58,298,612	78,584,160	6,753,131
HWVP B/O					
Canister Disposal B/O					
HLWV Operate Costs ($)	268,416,536	270,355,120	184,464,204	93,134,496	71,870,525

HLWV ACTIVITY COST BREAKDOWN	FY05	FY06	FY07	FY08	FY09
Activity % of HLWV Actual Costs (%)					
Studies/Permitting	0	0	0	0	0
Design	0	0	0	0	0
Construction/D&D	80	70	40	0	0
Operation	20	30	60	100	100
Total Percentage	100	100	100	100	100
HLWV Activity Costs($)					
Studies/Permitting	0	0	0	0	0
Design	0	0	0	0	0
Construction/D&D	214,733,229	189,248,584	73,785,682	0	0
Operation	53,683,307	81,106,536	110,678,522	93,134,496	71,870,525
Total Cost	268,416,536	270,355,120	184,464,204	93,134,496	71,870,525

HLWV FTE BREAKDOWN	FY05	FY06	FY07	FY08	FY09
Contractor FTE per HLWV Activity (FTE)					
STUDIES/PERMITTING - Site Management/Operations	0.0	0.0	0.0	0.0	0.0
STUDIES/PERMITTING - Site Infrastructure	0.0	0.0	0.0	0.0	0.0
STUDIES/PERMITTING - National Laboratories	0.0	0.0	0.0	0.0	0.0
STUDIES/PERMITTING - Site Constructors	0.0	0.0	0.0	0.0	0.0
STUDIES/PERMITTING - Architecture/Engineering Contract	0.0	0.0	0.0	0.0	0.0
STUDIES/PERMITTING - Construction Contractor	0.0	0.0	0.0	0.0	0.0
DESIGN - Site Management/Operations	0.0	0.0	0.0	0.0	0.0
DESIGN - Site Infrastructure	0.0	0.0	0.0	0.0	0.0
DESIGN - National Laboratories	0.0	0.0	0.0	0.0	0.0
DESIGN - Site Constructors	0.0	0.0	0.0	0.0	0.0
DESIGN - Architecture/Engineering Contractors	0.0	0.0	0.0	0.0	0.0
DESIGN - Construction Contractor	0.0	0.0	0.0	0.0	0.0
CONSTRUCTION/D&D - Site Management/Operations	130.4	114.9	44.8	0.0	0.0
CONSTRUCTION/D&D - Site Infrastructure	23.0	20.3	7.9	0.0	0.0
CONSTRUCTION/D&D - National Laboratories	0.0	0.0	0.0	0.0	0.0
CONSTRUCTION/D&D - Site Constructors	76.7	67.6	26.4	0.0	0.0
CONSTRUCTION/D&D - Architecture/Engineering Contracto	59.6	52.6	20.5	0.0	0.0
CONSTRUCTION/D&D - Construction Contractor	1,263.1	1,113.2	434.0	0.0	0.0
OPERATIONS - Site Management/Operations	260.7	393.9	537.6	452.4	349.1
OPERATIONS - Site Infrastructure	46.0	69.5	94.9	79.8	61.6
OPERATIONS - National Laboratories	0.0	0.0	0.0	0.0	0.0
OPERATIONS - Site Constructors	0.0	0.0	0.0	0.0	0.0
OPERATIONS - Architecture/Engineering Contractors	0.0	0.0	0.0	0.0	0.0
OPERATIONS - Construction Contractor	0.0	0.0	0.0	0.0	0.0

Worker Category FTE (FTE)	FY05	FY06	FY07	FY08	FY09
Engineer/Management	556.2	523.0	280.7	90.5	69.8
Crafts	1,025.8	904.1	352.5	0.0	0.0
Maintenance	78.2	118.2	161.3	135.7	104.7
Operators	130.4	197.0	268.8	226.2	174.5
Infrastructure	69.0	89.8	102.8	79.8	61.6
Total	1,859.6	1,832.0	1,166.0	532.2	410.7

FUNCTION - HLWV	FY10	FY11	FY12	FY13	FY14
HLWV Total Costs ($)	**237,062,928**	**258,307,376**	**256,645,664**	**255,781,728**	**254,340,240**
Technology Development (Test) Cost	0	0	0	0	0
Perform HLW Hot Operations First Year (Hot Test)	219,742,768	0	0	0	0
Perform HLW Cold Operations	0	0	0	0	0
Subtotal Test Costs	219,742,768	0	0	0	0
Test Oversight Costs	0	0	0	0	0
Total Test Costs	**219,742,768**	**0**	**0**	**0**	**0**
HWVP B/O					
Canister Disposal B/O					
HLWV Operate Costs ($)	**17,320,160**	**258,307,376**	**256,645,664**	**255,781,728**	**254,340,240**

HLWV ACTIVITY COST BREAKDOWN	FY10	FY11	FY12	FY13	FY14
Activity % of HLWV Actual Costs (%)					
Studies/Permitting	0	0	0	0	0
Design	0	0	0	0	0
Construction/D&D	0	0	0	0	0
Operation	100	100	100	100	100
Total Percentage	**100**	**100**	**100**	**100**	**100**
HLWV Activity Costs($)					
Studies/Permitting	0	0	0	0	0
Design	0	0	0	0	0
Construction/D&D	0	0	0	0	0
Operation	17,320,160	258,307,376	256,645,664	255,781,728	254,340,240
Total Cost	**17,320,160**	**258,307,376**	**256,645,664**	**255,781,728**	**254,340,240**

HLWV FTE BREAKDOWN	FY10	FY11	FY12	FY13	FY14
Contractor FTE per HLWV Activity (FTE)					
STUDIES/PERMITTING - Site Management/Operations	0.0	0.0	0.0	0.0	0.0
STUDIES/PERMITTING - Site Infrastructure	0.0	0.0	0.0	0.0	0.0
STUDIES/PERMITTING - National Laboratories	0.0	0.0	0.0	0.0	0.0
STUDIES/PERMITTING - Site Constructors	0.0	0.0	0.0	0.0	0.0
STUDIES/PERMITTING - Architecture/Engineering Contract	0.0	0.0	0.0	0.0	0.0
STUDIES/PERMITTING - Construction Contractor	0.0	0.0	0.0	0.0	0.0
DESIGN - Site Management/Operations	0.0	0.0	0.0	0.0	0.0
DESIGN - Site Infrastructure	0.0	0.0	0.0	0.0	0.0
DESIGN - National Laboratories	0.0	0.0	0.0	0.0	0.0
DESIGN - Site Constructors	0.0	0.0	0.0	0.0	0.0
DESIGN - Architecture/Engineering Contractors	0.0	0.0	0.0	0.0	0.0
DESIGN - Construction Contractor	0.0	0.0	0.0	0.0	0.0
CONSTRUCTION/D&D - Site Management/Operations	0.0	0.0	0.0	0.0	0.0
CONSTRUCTION/D&D - Site Infrastructure	0.0	0.0	0.0	0.0	0.0
CONSTRUCTION/D&D - National Laboratories	0.0	0.0	0.0	0.0	0.0
CONSTRUCTION/D&D - Site Constructors	0.0	0.0	0.0	0.0	0.0
CONSTRUCTION/D&D - Architecture/Engineering Contracto	0.0	0.0	0.0	0.0	0.0
CONSTRUCTION/D&D - Construction Contractor	0.0	0.0	0.0	0.0	0.0
OPERATIONS - Site Management/Operations	84.1	1,254.6	1,246.6	1,242.4	1,235.4
OPERATIONS - Site Infrastructure	14.8	221.4	220.0	219.2	218.0
OPERATIONS - National Laboratories	0.0	0.0	0.0	0.0	0.0
OPERATIONS - Site Constructors	0.0	0.0	0.0	0.0	0.0
OPERATIONS - Architecture/Engineering Contractors	0.0	0.0	0.0	0.0	0.0
OPERATIONS - Construction Contractor	0.0	0.0	0.0	0.0	0.0

Worker Category FTE (FTE)	FY10	FY11	FY12	FY13	FY14
Engineer/Management	16.8	250.9	249.3	248.5	247.1
Crafts	0.0	0.0	0.0	0.0	0.0
Maintenance	25.2	376.4	374.0	372.7	370.6
Operators	42.1	627.3	623.3	621.2	617.7
Infrastructure	14.8	221.4	220.0	219.2	218.0
Total	**99.0**	**1,476.0**	**1,466.5**	**1,461.6**	**1,453.4**

FUNCTION - HLWV	FY15	FY16	FY17	FY18	FY19
HLWV Total Costs ($)	254,243,584	254,509,904	251,246,496	250,443,264	250,041,424
Technology Development (Test) Cost	0	0	0	0	0
Perform HLW Hot Operations First Year (Hot Test)	0	0	0	0	0
Perform HLW Cold Operations	0	0	0	0	0
Subtotal Test Costs	0	0	0	0	0
Test Oversight Costs	0	0	0	0	0
Total Test Costs	0	0	0	0	0
HWVP B/O					
Canister Disposal B/O					
HLWV Operate Costs ($)	254,243,584	254,509,904	251,246,496	250,443,264	250,041,424

HLWV ACTIVITY COST BREAKDOWN	FY15	FY16	FY17	FY18	FY19
Activity % of HLWV Actual Costs (%)					
Studies/Permitting	0	0	0	0	0
Design	0	0	0	0	0
Construction/D&D	0	0	0	0	0
Operation	100	100	100	100	100
Total Percentage	100	100	100	100	100
HLWV Activity Costs($)					
Studies/Permitting	0	0	0	0	0
Design	0	0	0	0	0
Construction/D&D	0	0	0	0	0
Operation	254,243,584	254,509,904	251,246,496	250,443,264	250,041,424
Total Cost	254,243,584	254,509,904	251,246,496	250,443,264	250,041,424

HLWV FTE BREAKDOWN	FY15	FY16	FY17	FY18	FY19
Contractor FTE per HLWV Activity (FTE)					
STUDIES/PERMITTING - Site Management/Operations	0.0	0.0	0.0	0.0	0.0
STUDIES/PERMITTING - Site Infrastructure	0.0	0.0	0.0	0.0	0.0
STUDIES/PERMITTING - National Laboratories	0.0	0.0	0.0	0.0	0.0
STUDIES/PERMITTING - Site Constructors	0.0	0.0	0.0	0.0	0.0
STUDIES/PERMITTING - Architecture/Engineering Contract	0.0	0.0	0.0	0.0	0.0
STUDIES/PERMITTING - Construction Contractor	0.0	0.0	0.0	0.0	0.0
DESIGN - Site Management/Operations	0.0	0.0	0.0	0.0	0.0
DESIGN - Site Infrastructure	0.0	0.0	0.0	0.0	0.0
DESIGN - National Laboratories	0.0	0.0	0.0	0.0	0.0
DESIGN - Site Constructors	0.0	0.0	0.0	0.0	0.0
DESIGN - Architecture/Engineering Contractors	0.0	0.0	0.0	0.0	0.0
DESIGN - Construction Contractor	0.0	0.0	0.0	0.0	0.0
CONSTRUCTION/D&D - Site Management/Operations	0.0	0.0	0.0	0.0	0.0
CONSTRUCTION/D&D - Site Infrastructure	0.0	0.0	0.0	0.0	0.0
CONSTRUCTION/D&D - National Laboratories	0.0	0.0	0.0	0.0	0.0
CONSTRUCTION/D&D - Site Constructors	0.0	0.0	0.0	0.0	0.0
CONSTRUCTION/D&D - Architecture/Engineering Contracto	0.0	0.0	0.0	0.0	0.0
CONSTRUCTION/D&D - Construction Contractor	0.0	0.0	0.0	0.0	0.0
OPERATIONS - Site Management/Operations	1,234.9	1,236.2	1,220.3	1,216.4	1,214.5
OPERATIONS - Site Infrastructure	217.9	218.2	215.4	214.7	214.3
OPERATIONS - National Laboratories	0.0	0.0	0.0	0.0	0.0
OPERATIONS - Site Constructors	0.0	0.0	0.0	0.0	0.0
OPERATIONS - Architecture/Engineering Contractors	0.0	0.0	0.0	0.0	0.0
OPERATIONS - Construction Contractor	0.0	0.0	0.0	0.0	0.0

Worker Category FTE (FTE)	FY15	FY16	FY17	FY18	FY19
Engineer/Management	247.0	247.2	244.1	243.3	242.9
Crafts	0.0	0.0	0.0	0.0	0.0
Maintenance	370.5	370.9	366.1	364.9	364.3
Operators	617.4	618.1	610.2	608.2	607.2
Infrastructure	217.9	218.2	215.4	214.7	214.3
Total	1,452.8	1,454.3	1,435.7	1,431.1	1,428.8

FUNCTION - HLWV	FY20	FY21	FY22	FY23	FY24
HLWV Total Costs ($)	250,075,104	248,884,256	248,340,384	248,035,200	248,493,648
Technology Development (Test) Cost	0	0	0	0	0
Perform HLW Hot Operations First Year (Hot Test)	0	0	0	0	0
Perform HLW Cold Operations	0	0	0	0	0
Subtotal Test Costs	0	0	0	0	0
Test Oversight Costs	0	0	0	0	0
Total Test Costs	0	0	0	0	0
HWVP B/O					
Canister Disposal B/O					
HLWV Operate Costs ($)	250,075,104	248,884,256	248,340,384	248,035,200	248,493,648

HLWV ACTIVITY COST BREAKDOWN	FY20	FY21	FY22	FY23	FY24
Activity % of HLWV Actual Costs (%)					
Studies/Permitting	0	0	0	0	0
Design	0	0	0	0	0
Construction/D&D	0	0	0	0	0
Operation	100	100	100	100	100
Total Percentage	100	100	100	100	100
HLWV Activity Costs($)					
Studies/Permitting	0	0	0	0	0
Design	0	0	0	0	0
Construction/D&D	0	0	0	0	0
Operation	250,075,104	248,884,256	248,340,384	248,035,200	248,493,648
Total Cost	250,075,104	248,884,256	248,340,384	248,035,200	248,493,648

HLWV FTE BREAKDOWN	FY20	FY21	FY22	FY23	FY24
Contractor FTE per HLWV Activity (FTE)					
STUDIES/PERMITTING - Site Management/Operations	0.0	0.0	0.0	0.0	0.0
STUDIES/PERMITTING - Site Infrastructure	0.0	0.0	0.0	0.0	0.0
STUDIES/PERMITTING - National Laboratories	0.0	0.0	0.0	0.0	0.0
STUDIES/PERMITTING - Site Constructors	0.0	0.0	0.0	0.0	0.0
STUDIES/PERMITTING - Architecture/Engineering Contract	0.0	0.0	0.0	0.0	0.0
STUDIES/PERMITTING - Construction Contractor	0.0	0.0	0.0	0.0	0.0
DESIGN - Site Management/Operations	0.0	0.0	0.0	0.0	0.0
DESIGN - Site Infrastructure	0.0	0.0	0.0	0.0	0.0
DESIGN - National Laboratories	0.0	0.0	0.0	0.0	0.0
DESIGN - Site Constructors	0.0	0.0	0.0	0.0	0.0
DESIGN - Architecture/Engineering Contractors	0.0	0.0	0.0	0.0	0.0
DESIGN - Construction Contractor	0.0	0.0	0.0	0.0	0.0
CONSTRUCTION/D&D - Site Management/Operations	0.0	0.0	0.0	0.0	0.0
CONSTRUCTION/D&D - Site Infrastructure	0.0	0.0	0.0	0.0	0.0
CONSTRUCTION/D&D - National Laboratories	0.0	0.0	0.0	0.0	0.0
CONSTRUCTION/D&D - Site Constructors	0.0	0.0	0.0	0.0	0.0
CONSTRUCTION/D&D - Architecture/Engineering Contracto	0.0	0.0	0.0	0.0	0.0
CONSTRUCTION/D&D - Construction Contractor	0.0	0.0	0.0	0.0	0.0
OPERATIONS - Site Management/Operations	1,214.7	1,208.9	1,206.2	1,204.7	1,207.0
OPERATIONS - Site Infrastructure	214.4	213.3	212.9	212.6	213.0
OPERATIONS - National Laboratories	0.0	0.0	0.0	0.0	0.0
OPERATIONS - Site Constructors	0.0	0.0	0.0	0.0	0.0
OPERATIONS - Architecture/Engineering Contractors	0.0	0.0	0.0	0.0	0.0
OPERATIONS - Construction Contractor	0.0	0.0	0.0	0.0	0.0

Worker Category FTE (FTE)	FY20	FY21	FY22	FY23	FY24
Engineer/Management	242.9	241.8	241.2	240.9	241.4
Crafts	0.0	0.0	0.0	0.0	0.0
Maintenance	364.4	362.7	361.9	361.4	362.1
Operators	607.3	604.4	603.1	602.4	603.5
Infrastructure	214.4	213.3	212.9	212.6	213.0
Total	1,429.0	1,422.2	1,419.1	1,417.3	1,420.0

FUNCTION - HLWV	FY25	FY26	FY27	FY28	FY29
HLWV Total Costs ($)	246,741,568	246,238,736	245,829,248	246,386,192	260,613,328
Technology Development (Test) Cost	0	0	0	0	0
Perform HLW Hot Operations First Year (Hot Test)	0	0	0	0	0
Perform HLW Cold Operations	0	0	0	0	0
Subtotal Test Costs	0	0	0	0	0
Test Oversight Costs	0	0	0	0	0
Total Test Costs	0	0	0	0	0
HWVP B/O					
Canister Disposal B/O					
HLWV Operate Costs ($)	246,741,568	246,238,736	245,829,248	246,386,192	260,613,328

HLWV ACTIVITY COST BREAKDOWN	FY25	FY26	FY27	FY28	FY29
Activity % of HLWV Actual Costs (%)					
Studies/Permitting	0	0	0	0	0
Design	0	0	0	0	0
Construction/D&D	0	0	0	0	80
Operation	100	100	100	100	20
Total Percentage	100	100	100	100	100
HLWV Activity Costs($)					
Studies/Permitting	0	0	0	0	0
Design	0	0	0	0	0
Construction/D&D	0	0	0	0	208,490,662
Operation	246,741,568	246,238,736	245,829,248	246,386,192	52,122,666
Total Cost	246,741,568	246,238,736	245,829,248	246,386,192	260,613,328

HLWV FTE BREAKDOWN	FY25	FY26	FY27	FY28	FY29
Contractor FTE per HLWV Activity (FTE)					
STUDIES/PERMITTING - Site Management/Operations	0.0	0.0	0.0	0.0	0.0
STUDIES/PERMITTING - Site Infrastructure	0.0	0.0	0.0	0.0	0.0
STUDIES/PERMITTING - National Laboratories	0.0	0.0	0.0	0.0	0.0
STUDIES/PERMITTING - Site Constructors	0.0	0.0	0.0	0.0	0.0
STUDIES/PERMITTING - Architecture/Engineering Contract	0.0	0.0	0.0	0.0	0.0
STUDIES/PERMITTING - Construction Contractor	0.0	0.0	0.0	0.0	0.0
DESIGN - Site Management/Operations	0.0	0.0	0.0	0.0	0.0
DESIGN - Site Infrastructure	0.0	0.0	0.0	0.0	0.0
DESIGN - National Laboratories	0.0	0.0	0.0	0.0	0.0
DESIGN - Site Constructors	0.0	0.0	0.0	0.0	0.0
DESIGN - Architecture/Engineering Contractors	0.0	0.0	0.0	0.0	0.0
DESIGN - Construction Contractor	0.0	0.0	0.0	0.0	0.0
CONSTRUCTION/D&D - Site Management/Operations	0.0	0.0	0.0	0.0	126.6
CONSTRUCTION/D&D - Site Infrastructure	0.0	0.0	0.0	0.0	22.3
CONSTRUCTION/D&D - National Laboratories	0.0	0.0	0.0	0.0	0.0
CONSTRUCTION/D&D - Site Constructors	0.0	0.0	0.0	0.0	74.5
CONSTRUCTION/D&D - Architecture/Engineering Contracto	0.0	0.0	0.0	0.0	57.9
CONSTRUCTION/D&D - Construction Contractor	0.0	0.0	0.0	0.0	1,226.4
OPERATIONS - Site Management/Operations	1,198.5	1,196.0	1,194.0	1,196.7	253.2
OPERATIONS - Site Infrastructure	211.5	211.1	210.7	211.2	44.7
OPERATIONS - National Laboratories	0.0	0.0	0.0	0.0	0.0
OPERATIONS - Site Constructors	0.0	0.0	0.0	0.0	0.0
OPERATIONS - Architecture/Engineering Contractors	0.0	0.0	0.0	0.0	0.0
OPERATIONS - Construction Contractor	0.0	0.0	0.0	0.0	0.0

Worker Category FTE (FTE)	FY25	FY26	FY27	FY28	FY29
Engineer/Management	239.7	239.2	238.8	239.3	540.0
Crafts	0.0	0.0	0.0	0.0	996.0
Maintenance	359.5	358.8	358.2	359.0	76.0
Operators	599.2	598.0	597.0	598.4	126.6
Infrastructure	211.5	211.1	210.7	211.2	67.0
Total	1,410.0	1,407.1	1,404.7	1,407.9	1,805.6

FUNCTION - HLWV	FY30	FY31	FY32	FY33	FY34	FY35
HLWV Total Costs ($)	180,834,064	22,790,768	6,592,730	6,574,717	6,574,717	492,378,208
Technology Development (Test) Cost	0	0	0	0	0	0
Perform HLW Hot Operations First Year (Hot Test)	0	0	0	0	0	0
Perform HLW Cold Operations	0	0	0	0	0	0
Subtotal Test Costs	0	0	0	0	0	0
Test Oversight Costs	0	0	0	0	0	0
Total Test Costs	0	0	0	0	0	0
HWVP B/O						
Canister Disposal B/O						485,803,488
HLWV Operate Costs ($)	180,834,064	22,790,768	6,592,730	6,574,717	6,574,717	6,574,720

HLWV ACTIVITY COST BREAKDOWN	FY30	FY31	FY32	FY33	FY34	FY35
Activity % of HLWV Actual Costs (%)						
Studies/Permitting	0	0	0	0	0	0
Design	0	0	0	0	0	0
Construction/D&D	80	0	0	0	0	0
Operation	20	100	100	100	100	100
Total Percentage	100	100	100	100	100	100
HLWV Activity Costs($)						
Studies/Permitting	0	0	0	0	0	0
Design	0	0	0	0	0	0
Construction/D&D	144,667,251	0	0	0	0	0
Operation	36,166,813	22,790,768	6,592,730	6,574,717	6,574,717	6,574,720
Total Cost	180,834,064	22,790,768	6,592,730	6,574,717	6,574,717	6,574,720

HLWV FTE BREAKDOWN	FY30	FY31	FY32	FY33	FY34	FY35
Contractor FTE per HLWV Activity (FTE)						
STUDIES/PERMITTING - Site Management/Operations	0.0	0.0	0.0	0.0	0.0	0.0
STUDIES/PERMITTING - Site Infrastructure	0.0	0.0	0.0	0.0	0.0	0.0
STUDIES/PERMITTING - National Laboratories	0.0	0.0	0.0	0.0	0.0	0.0
STUDIES/PERMITTING - Site Constructors	0.0	0.0	0.0	0.0	0.0	0.0
STUDIES/PERMITTING - Architecture/Engineering Contract	0.0	0.0	0.0	0.0	0.0	0.0
STUDIES/PERMITTING - Construction Contractor	0.0	0.0	0.0	0.0	0.0	0.0
DESIGN - Site Management/Operations	0.0	0.0	0.0	0.0	0.0	0.0
DESIGN - Site Infrastructure	0.0	0.0	0.0	0.0	0.0	0.0
DESIGN - National Laboratories	0.0	0.0	0.0	0.0	0.0	0.0
DESIGN - Site Constructors	0.0	0.0	0.0	0.0	0.0	0.0
DESIGN - Architecture/Engineering Contractors	0.0	0.0	0.0	0.0	0.0	0.0
DESIGN - Construction Contractor	0.0	0.0	0.0	0.0	0.0	0.0
CONSTRUCTION/D&D - Site Management/Operations	87.8	0.0	0.0	0.0	0.0	0.0
CONSTRUCTION/D&D - Site Infrastructure	15.5	0.0	0.0	0.0	0.0	0.0
CONSTRUCTION/D&D - National Laboratories	0.0	0.0	0.0	0.0	0.0	0.0
CONSTRUCTION/D&D - Site Constructors	51.7	0.0	0.0	0.0	0.0	0.0
CONSTRUCTION/D&D - Architecture/Engineering Contracto	40.2	0.0	0.0	0.0	0.0	0.0
CONSTRUCTION/D&D - Construction Contractor	851.0	0.0	0.0	0.0	0.0	0.0
OPERATIONS - Site Management/Operations	175.7	110.7	32.0	31.9	31.9	31.9
OPERATIONS - Site Infrastructure	31.0	19.5	5.7	5.6	5.6	5.6
OPERATIONS - National Laboratories	0.0	0.0	0.0	0.0	0.0	0.0
OPERATIONS - Site Constructors	0.0	0.0	0.0	0.0	0.0	0.0
OPERATIONS - Architecture/Engineering Contractors	0.0	0.0	0.0	0.0	0.0	0.0
OPERATIONS - Construction Contractor	0.0	0.0	0.0	0.0	0.0	0.0

Worker Category FTE (FTE)	FY30	FY31	FY32	FY33	FY34	FY35
Engineer/Management	374.7	22.1	6.4	6.4	6.4	6.4
Crafts	691.1	0.0	0.0	0.0	0.0	0.0
Maintenance	52.7	33.2	9.6	9.6	9.6	9.6
Operators	87.8	55.3	16.0	16.0	16.0	16.0
Infrastructure	46.5	19.5	5.7	5.6	5.6	5.6
Total	1,252.8	130.2	37.7	37.6	37.6	37.6

FUNCTION - HLWV	FY36	FY37	FY38	FY39	FY40
HLWV Total Costs ($)	555,370,752	553,853,312	553,853,312	553,853,312	62,213,660
Technology Development (Test) Cost	0	0	0	0	0
Perform HLW Hot Operations First Year (Hot Test)	0	0	0	0	0
Perform HLW Cold Operations	0	0	0	0	0
Subtotal Test Costs	0	0	0	0	0
Test Oversight Costs	0	0	0	0	0
Total Test Costs	0	0	0	0	0
HWVP B/O					
Canister Disposal B/O	548,778,048	547,278,656	547,278,656	547,278,656	61,475,132
HLWV Operate Costs ($)	6,592,704	6,574,656	6,574,656	6,574,656	738,528

HLWV ACTIVITY COST BREAKDOWN	FY36	FY37	FY38	FY39	FY40
Activity % of HLWV Actual Costs (%)					
Studies/Permitting	0	0	0	0	0
Design	0	0	0	0	0
Construction/D&D	0	0	0	0	0
Operation	100	100	100	100	100
Total Percentage	100	100	100	100	100
HLWV Activity Costs($)					
Studies/Permitting	0	0	0	0	0
Design	0	0	0	0	0
Construction/D&D	0	0	0	0	0
Operation	6,592,704	6,574,656	6,574,656	6,574,656	738,528
Total Cost	6,592,704	6,574,656	6,574,656	6,574,656	738,528

HLWV FTE BREAKDOWN	FY36	FY37	FY38	FY39	FY40
Contractor FTE per HLWV Activity (FTE)					
STUDIES/PERMITTING - Site Management/Operations	0.0	0.0	0.0	0.0	0.0
STUDIES/PERMITTING - Site Infrastructure	0.0	0.0	0.0	0.0	0.0
STUDIES/PERMITTING - National Laboratories	0.0	0.0	0.0	0.0	0.0
STUDIES/PERMITTING - Site Constructors	0.0	0.0	0.0	0.0	0.0
STUDIES/PERMITTING - Architecture/Engineering Contract	0.0	0.0	0.0	0.0	0.0
STUDIES/PERMITTING - Construction Contractor	0.0	0.0	0.0	0.0	0.0
DESIGN - Site Management/Operations	0.0	0.0	0.0	0.0	0.0
DESIGN - Site Infrastructure	0.0	0.0	0.0	0.0	0.0
DESIGN - National Laboratories	0.0	0.0	0.0	0.0	0.0
DESIGN - Site Constructors	0.0	0.0	0.0	0.0	0.0
DESIGN - Architecture/Engineering Contractors	0.0	0.0	0.0	0.0	0.0
DESIGN - Construction Contractor	0.0	0.0	0.0	0.0	0.0
CONSTRUCTION/D&D - Site Management/Operations	0.0	0.0	0.0	0.0	0.0
CONSTRUCTION/D&D - Site Infrastructure	0.0	0.0	0.0	0.0	0.0
CONSTRUCTION/D&D - National Laboratories	0.0	0.0	0.0	0.0	0.0
CONSTRUCTION/D&D - Site Constructors	0.0	0.0	0.0	0.0	0.0
CONSTRUCTION/D&D - Architecture/Engineering Contracto	0.0	0.0	0.0	0.0	0.0
CONSTRUCTION/D&D - Construction Contractor	0.0	0.0	0.0	0.0	0.0
OPERATIONS - Site Management/Operations	32.0	31.9	31.9	31.9	3.6
OPERATIONS - Site Infrastructure	5.7	5.6	5.6	5.6	0.6
OPERATIONS - National Laboratories	0.0	0.0	0.0	0.0	0.0
OPERATIONS - Site Constructors	0.0	0.0	0.0	0.0	0.0
OPERATIONS - Architecture/Engineering Contractors	0.0	0.0	0.0	0.0	0.0
OPERATIONS - Construction Contractor	0.0	0.0	0.0	0.0	0.0

Worker Category FTE (FTE)	FY36	FY37	FY38	FY39	FY40
Engineer/Management	6.4	6.4	6.4	6.4	0.7
Crafts	0.0	0.0	0.0	0.0	0.0
Maintenance	9.6	9.6	9.6	9.6	1.1
Operators	16.0	16.0	16.0	16.0	1.8
Infrastructure	5.7	5.6	5.6	5.6	0.6
Total	37.7	37.6	37.6	37.6	4.2

FUNCTION - HLWV	Totals
HLWV Total Costs ($)	10,643,472,772
Technology Development (Test) Cost	47,129,988
Perform HLW Hot Operations First Year (Hot Test)	219,742,768
Perform HLW Cold Operations	197,110,095
Subtotal Test Costs	463,982,851
Test Oversight Costs	0
Total Test Costs	463,982,851
	0
HWVP B/O	4,749,240
Canister Disposal B/O	2,737,892,636
HLWV Operate Costs ($)	7,436,848,045

HLWV ACTIVITY COST BREAKDOWN

Activity % of HLWV Actual Costs (%)	
Studies/Permitting	
Design	
Construction/D&D	
Operation	
Total Percentage	

HLWV Activity Costs($)	**Totals**
Studies/Permitting	66,621,328
Design	742,290,240
Construction/D&D	1,521,106,584
Operation	5,106,829,893
Total Cost	7,436,848,045

HLWV FTE BREAKDOWN	Totals
Contractor FTE per HLWV Activity (FTE)	
STUDIES/PERMITTING - Site Management/Operations	384.3
STUDIES/PERMITTING - Site Infrastructure	67.8
STUDIES/PERMITTING - National Laboratories	17.9
STUDIES/PERMITTING - Site Constructors	0.0
STUDIES/PERMITTING - Architecture/Engineering Contract	0.0
STUDIES/PERMITTING - Construction Contractor	0.0
DESIGN - Site Management/Operations	901.4
DESIGN - Site Infrastructure	159.1
DESIGN - National Laboratories	0.0
DESIGN - Site Constructors	265.1
DESIGN - Architecture/Engineering Contractors	3,092.9
DESIGN - Construction Contractor	0.0
CONSTRUCTION/D&D - Site Management/Operations	923.5
CONSTRUCTION/D&D - Site Infrastructure	163.0
CONSTRUCTION/D&D - National Laboratories	0.0
CONSTRUCTION/D&D - Site Constructors	543.3
CONSTRUCTION/D&D - Architecture/Engineering Contracto	422.5
CONSTRUCTION/D&D - Construction Contractor	8,947.7
OPERATIONS - Site Management/Operations	24,804.6
OPERATIONS - Site Infrastructure	4,377.3
OPERATIONS - National Laboratories	0.0
OPERATIONS - Site Constructors	0.0
OPERATIONS - Architecture/Engineering Contractors	0.0
OPERATIONS - Construction Contractor	0.0

Worker Category FTE (FTE)	Totals
Engineer/Management	13,192.6
Crafts	7,266.8
Maintenance	7,441.4
Operators	12,402.3
Infrastructure	4,767.1
Total	45,070.2

APPENDIX B-2: BASELINE ATLERNATIVE COST AND FTE RESOURCES

This page intentionally left blank.

FUNCTION - ALTERNATIVE 4 RETRIEVAL	FY95	FY96	FY97	FY98	FY99	FY00
Technology Development (Test) Cost	11,184,609	22,300,346	8,897,309	133,615	0	0
Retrieve SY-101, SY-103	0	0	0	0	816,894	1,277,706
Perform Arm-based SST WR Demo C-106	0	0	0	0	0	0
Project W-151	11,728,347	979,456	1,111,604	257,366	0	0
Project W-211	5,847,000	14,913,124	26,519,114	7,227,763	0	0
Perform sluicing WR Demo C-106	0	0	0	7,715,732	1,936,618	0
Project W-340	4,000,000	8,440,000	168,924		0	0
Subtotal Test Costs	32,759,956	46,632,926	36,696,951	15,334,476	2,753,512	1,277,706
Test Oversight Costs	3,275,996	4,663,293	3,669,695	1,533,448	275,351	127,771
Total Retrieval Base Costs	**36,035,952**	**51,296,219**	**40,366,646**	**16,867,924**	**3,028,863**	**1,405,477**
Total Alt 4 Reddick Costs	1,000,000	1,000,000	3,000,000	5,000,000	12,000,000	12,000,000
Retrieval % of Total Alt 4 Reddick Costs	20	20	20	20	20	20
Alt 4 Retrieval Reddick Costs	**200,000**	**200,000**	**600,000**	**1,000,000**	**2,400,000**	**2,400,000**
Alt 4 Retrieval Actual Costs ($)	**36,235,952**	**51,496,219**	**40,966,646**	**17,867,924**	**5,428,863**	**3,805,477**

ALTERNATIVE 4 RETRIEVAL BASE COST BREAKDOWN	FY95	FY96	FY97	FY98	FY99	FY00
Activity % of Alt 4 Retrieval Base Costs (%)						
Studies/Permitting	55	45	40	20	15	10
Design	10	20	20	30	15	0
Construction/D&D	15	10	20	40	45	45
Operation	20	25	20	10	25	45
Total Percentage	**100**	**100**	**100**	**100**	**100**	**100**
Alt 4 Retrieval Activity Base Costs($)						
Studies/Permitting	19,819,773	23,083,298	16,146,658	3,373,585	454,329	140,548
Design	3,603,595	10,259,244	8,073,329	5,060,377	454,329	0
Construction/D&D	5,405,393	5,129,622	8,073,329	6,747,169	1,362,988	632,464
Operation	7,207,190	12,824,055	8,073,329	1,686,792	757,216	632,464
Total Cost	**36,035,952**	**51,296,219**	**40,366,646**	**16,867,924**	**3,028,863**	**1,405,477**

ALTERNATIVE 4 RETRIEVAL BASE FTE BREAKDOWN	FY95	FY96	FY97	FY98	FY99	FY00
Contractor Base FTE per Alt 4 Retrieval Activity (FTE)						
STUDIES/PERMITTING - Site Management/Operations	90.3	105.1	73.5	15.4	2.1	0.6
STUDIES/PERMITTING - Site Infrastructure	15.9	18.5	13.0	2.7	0.4	0.1
STUDIES/PERMITTING - National Laboratories	26.6	31.0	21.7	4.5	0.6	0.2
STUDIES/PERMITTING - Site Constructors	0.0	0.0	0.0	0.0	0.0	0.0
STUDIES/PERMITTING - Architecture/Engineering Contract	0.0	0.0	0.0	0.0	0.0	0.0
STUDIES/PERMITTING - Construction Contractor	0.0	0.0	0.0	0.0	0.0	0.0
DESIGN - Site Management/Operations	2.2	6.2	4.9	3.1	0.3	0.0
DESIGN - Site Infrastructure	0.4	1.1	0.9	0.5	0.0	0.0
DESIGN - National Laboratories	1.9	5.5	4.3	2.7	0.2	0.0
DESIGN - Site Constructors	1.3	3.7	2.9	1.8	0.2	0.0
DESIGN - Architecture/Engineering Contractors	15.0	42.7	33.6	21.1	1.9	0.0
DESIGN - Construction Contractor	0.0	0.0	0.0	0.0	0.0	0.0
CONSTRUCTION/D&D - Site Management/Operations	1.6	1.6	2.5	2.0	0.4	0.2
CONSTRUCTION/D&D - Site Infrastructure	0.3	0.3	0.4	0.4	0.1	0.0
CONSTRUCTION/D&D - National Laboratories	1.5	1.4	2.2	1.8	0.4	0.2
CONSTRUCTION/D&D - Site Constructors	1.9	1.8	2.9	2.4	0.5	0.2
CONSTRUCTION/D&D - Architecture/Engineering Contracto	1.5	1.4	2.2	1.9	0.4	0.2
CONSTRUCTION/D&D - Construction Contractor	31.8	30.2	47.5	39.7	8.0	3.7
OPERATIONS - Site Management/Operations	24.1	42.8	27.0	5.6	2.5	2.1
OPERATIONS - Site Infrastructure	4.2	7.6	4.8	1.0	0.4	0.4
OPERATIONS - National Laboratories	9.7	17.2	10.8	2.3	1.0	0.8
OPERATIONS - Site Constructors	0.0	0.0	0.0	0.0	0.0	0.0
OPERATIONS - Architecture/Engineering Contractors	0.0	0.0	0.0	0.0	0.0	0.0
OPERATIONS - Construction Contractor	0.0	0.0	0.0	0.0	0.0	0.0

Worker Category Base FTE (FTE)	FY95	FY96	FY97	FY98	FY99	FY00
Engineer/Management	156.5	218.1	167.2	65.7	9.1	2.9
Crafts	25.8	24.5	38.6	32.2	6.5	3.0
Maintenance	10.1	18.0	11.3	2.4	1.1	0.9
Operators	16.9	30.0	18.9	3.9	1.8	1.5
Infrastructure	20.8	27.5	19.0	4.6	0.9	0.5
Total	**230.2**	**318.1**	**255.0**	**108.9**	**19.4**	**8.8**

FUNCTION - ALTERNATIVE 4 RETRIEVAL	FY01	FY02	FY03	FY04	FY05	FY06
Technology Development (Test) Cost	0	0	0	0	0	0
Retrieve SY-101, SY-103	457,321	0	0	0	0	0
Perform Arm-based SST WR Demo C-106	0	1,760,159	9,588,926	656,776	0	0
Project W-151	0	0	0	0	0	0
Project W-211	0	0	0	0	0	0
Perform sluicing WR Demo C-106	0	0	0	0	0	0
Project W-340	0	0	0	0	0	0
Subtotal Test Costs	457,321	1,760,159	9,588,926	656,776	0	0
Test Oversight Costs	45,732	176,016	958,893	65,678	0	0
Total Retrieval Base Costs	**503,053**	**1,936,175**	**10,547,819**	**722,454**	**0**	**0**
Total Alt 4 Reddick Costs	30,000,000	40,000,000	45,000,000	10,000,000	10,000,000	10,000,000
Retrieval % of Total Alt 4 Reddick Costs	20	20	20	20	20	20
Alt 4 Retrieval Reddick Costs	**6,000,000**	**8,000,000**	**9,000,000**	**2,000,000**	**2,000,000**	**2,000,000**
Alt 4 Retrieval Actual Costs ($)	**6,503,053**	**9,936,175**	**19,547,819**	**2,722,454**	**2,000,000**	**2,000,000**

ALTERNATIVE 4 RETRIEVAL BASE COST BREAKDOWN	FY01	FY02	FY03	FY04	FY05	FY06
Activity % of Alt 4 Retrieval Base Costs (%)						
Studies/Permitting	20	30	10	10	0	0
Design	0	0	0	0	0	0
Construction/D&D	20	0	0	0	0	0
Operation	60	70	90	90	0	0
Total Percentage	**100**	**100**	**100**	**100**	**0**	**0**
Alt 4 Retrieval Activity Base Costs($)						
Studies/Permitting	100,611	580,852	1,054,782	72,245	0	0
Design	0	0	0	0	0	0
Construction/D&D	100,611	0	0	0	0	0
Operation	301,832	1,355,322	9,493,037	650,208	0	0
Total Cost	**503,053**	**1,936,175**	**10,547,819**	**722,454**	**0**	**0**

ALTERNATIVE 4 RETRIEVAL BASE FTE BREAKDOWN	FY01	FY02	FY03	FY04	FY05	FY06
Contractor Base FTE per Alt 4 Retrieval Activity (FTE)						
STUDIES/PERMITTING - Site Management/Operations	0.5	2.6	4.8	0.3	0.0	0.0
STUDIES/PERMITTING - Site Infrastructure	0.1	0.5	0.8	0.1	0.0	0.0
STUDIES/PERMITTING - National Laboratories	0.1	0.8	1.4	0.1	0.0	0.0
STUDIES/PERMITTING - Site Constructors	0.0	0.0	0.0	0.0	0.0	0.0
STUDIES/PERMITTING - Architecture/Engineering Contract	0.0	0.0	0.0	0.0	0.0	0.0
STUDIES/PERMITTING - Construction Contractor	0.0	0.0	0.0	0.0	0.0	0.0
DESIGN - Site Management/Operations	0.0	0.0	0.0	0.0	0.0	0.0
DESIGN - Site Infrastructure	0.0	0.0	0.0	0.0	0.0	0.0
DESIGN - National Laboratories	0.0	0.0	0.0	0.0	0.0	0.0
DESIGN - Site Constructors	0.0	0.0	0.0	0.0	0.0	0.0
DESIGN - Architecture/Engineering Contractors	0.0	0.0	0.0	0.0	0.0	0.0
DESIGN - Construction Contractor	0.0	0.0	0.0	0.0	0.0	0.0
CONSTRUCTION/D&D - Site Management/Operations	0.0	0.0	0.0	0.0	0.0	0.0
CONSTRUCTION/D&D - Site Infrastructure	0.0	0.0	0.0	0.0	0.0	0.0
CONSTRUCTION/D&D - National Laboratories	0.0	0.0	0.0	0.0	0.0	0.0
CONSTRUCTION/D&D - Site Constructors	0.0	0.0	0.0	0.0	0.0	0.0
CONSTRUCTION/D&D - Architecture/Engineering Contracto	0.0	0.0	0.0	0.0	0.0	0.0
CONSTRUCTION/D&D - Construction Contractor	0.6	0.0	0.0	0.0	0.0	0.0
OPERATIONS - Site Management/Operations	1.0	4.5	31.7	2.2	0.0	0.0
OPERATIONS - Site Infrastructure	0.2	0.8	5.6	0.4	0.0	0.0
OPERATIONS - National Laboratories	0.4	1.8	12.7	0.9	0.0	0.0
OPERATIONS - Site Constructors	0.0	0.0	0.0	0.0	0.0	0.0
OPERATIONS - Architecture/Engineering Contractors	0.0	0.0	0.0	0.0	0.0	0.0
OPERATIONS - Construction Contractor	0.0	0.0	0.0	0.0	0.0	0.0

Worker Category Base FTE (FTE)	FY01	FY02	FY03	FY04	FY05	FY06
Engineer/Management	1.1	4.7	15.1	1.0	0.0	0.0
Crafts	0.5	0.0	0.0	0.0	0.0	0.0
Maintenance	0.4	1.9	13.3	0.9	0.0	0.0
Operators	0.7	3.2	22.2	1.5	0.0	0.0
Infrastructure	0.3	1.3	6.4	0.4	0.0	0.0
Total	3.0	11.0	57.1	3.9	0.0	0.0

FUNCTION - ALTERNATIVE 4 RETRIEVAL	FY07	FY08	FY09	FY10	FY11	FY12
Technology Development (Test) Cost	0	0	0	0	0	0
Retrieve SY-101, SY-103	0	0	0	0	0	0
Perform Arm-based SST WR Demo C-106	0	0	0	0	0	0
Project W-151	0	0	0	0	0	0
Project W-211	0	0	0	0	0	0
Perform sluicing WR Demo C-106	0	0	0	0	0	0
Project W-340	0	0	0	0	0	0
Subtotal Test Costs	0	0	0	0	0	0
Test Oversight Costs	0	0	0	0	0	0
Total Retrieval Base Costs	0	0	0	0	0	0
Total Alt 4 Reddick Costs	10,000,000	10,000,000	0	0		
Retrieval % of Total Alt 4 Reddick Costs	20	20	0	0		
Alt 4 Retrieval Reddick Costs	2,000,000	2,000,000	0	0	0	0
Alt 4 Retrieval Actual Costs ($)	2,000,000	2,000,000	0	0	0	0

ALTERNATIVE 4 RETRIEVAL BASE COST BREAKDOWN	FY07	FY08	FY09	FY10	FY11	FY12
Activity % of Alt 4 Retrieval Base Costs (%)						
Studies/Permitting	0	0	0	0	0	0
Design	0	0	0	0	0	0
Construction/D&D	0	0	0	0	0	0
Operation	0	0	0	0	0	0
Total Percentage	0	0	0	0	0	0
Alt 4 Retrieval Activity Base Costs($)						
Studies/Permitting	0	0	0	0	0	0
Design	0	0	0	0	0	0
Construction/D&D	0	0	0	0	0	0
Operation	0	0	0	0	0	0
Total Cost	0	0	0	0	0	0

ALTERNATIVE 4 RETRIEVAL BASE FTE BREAKDOWN	FY07	FY08	FY09	FY10	FY11	FY12
Contractor Base FTE per Alt 4 Retrieval Activity (FTE)						
STUDIES/PERMITTING - Site Management/Operations	0.0	0.0	0.0	0.0	0.0	0.0
STUDIES/PERMITTING - Site Infrastructure	0.0	0.0	0.0	0.0	0.0	0.0
STUDIES/PERMITTING - National Laboratories	0.0	0.0	0.0	0.0	0.0	0.0
STUDIES/PERMITTING - Site Constructors	0.0	0.0	0.0	0.0	0.0	0.0
STUDIES/PERMITTING - Architecture/Engineering Contract	0.0	0.0	0.0	0.0	0.0	0.0
STUDIES/PERMITTING - Construction Contractor	0.0	0.0	0.0	0.0	0.0	0.0
DESIGN - Site Management/Operations	0.0	0.0	0.0	0.0	0.0	0.0
DESIGN - Site Infrastructure	0.0	0.0	0.0	0.0	0.0	0.0
DESIGN - National Laboratories	0.0	0.0	0.0	0.0	0.0	0.0
DESIGN - Site Constructors	0.0	0.0	0.0	0.0	0.0	0.0
DESIGN - Architecture/Engineering Contractors	0.0	0.0	0.0	0.0	0.0	0.0
DESIGN - Construction Contractor	0.0	0.0	0.0	0.0	0.0	0.0
CONSTRUCTION/D&D - Site Management/Operations	0.0	0.0	0.0	0.0	0.0	0.0
CONSTRUCTION/D&D - Site Infrastructure	0.0	0.0	0.0	0.0	0.0	0.0
CONSTRUCTION/D&D - National Laboratories	0.0	0.0	0.0	0.0	0.0	0.0
CONSTRUCTION/D&D - Site Constructors	0.0	0.0	0.0	0.0	0.0	0.0
CONSTRUCTION/D&D - Architecture/Engineering Contracto	0.0	0.0	0.0	0.0	0.0	0.0
CONSTRUCTION/D&D - Construction Contractor	0.0	0.0	0.0	0.0	0.0	0.0
OPERATIONS - Site Management/Operations	0.0	0.0	0.0	0.0	0.0	0.0
OPERATIONS - Site Infrastructure	0.0	0.0	0.0	0.0	0.0	0.0
OPERATIONS - National Laboratories	0.0	0.0	0.0	0.0	0.0	0.0
OPERATIONS - Site Constructors	0.0	0.0	0.0	0.0	0.0	0.0
OPERATIONS - Architecture/Engineering Contractors	0.0	0.0	0.0	0.0	0.0	0.0
OPERATIONS - Construction Contractor	0.0	0.0	0.0	0.0	0.0	0.0

Worker Category Base FTE (FTE)	FY07	FY08	FY09	FY10	FY11	FY12
Engineer/Management	0.0	0.0	0.0	0.0	0.0	0.0
Crafts	0.0	0.0	0.0	0.0	0.0	0.0
Maintenance	0.0	0.0	0.0	0.0	0.0	0.0
Operators	0.0	0.0	0.0	0.0	0.0	0.0
Infrastructure	0.0	0.0	0.0	0.0	0.0	0.0
Total	0.0	0.0	0.0	0.0	0.0	0.0

FUNCTION - ALTERNATIVE 4 RETRIEVAL	FY13	FY14	FY15	FY16	FY17	FY18	FY19	FY20	FY21
Technology Development (Test) Cost	0	0	0	0	0	0	0	0	0
Retrieve SY-101, SY-103	0	0	0	0	0	0	0	0	0
Perform Arm-based SST WR Demo C-106	0	0	0	0	0	0	0	0	0
Project W-151	0	0	0	0	0	0	0	0	0
Project W-211	0	0	0	0	0	0	0	0	0
Perform sluicing WR Demo C-106	0	0	0	0	0	0	0	0	0
Project W-340	0	0	0	0	0	0	0	0	0
Subtotal Test Costs	0	0	0	0	0	0	0	0	0
Test Oversight Costs	0	0	0	0	0	0	0	0	0
Total Retrieval Base Costs	0	0	0	0	0	0	0	0	0
Total Alt 4 Reddick Costs									
Retrieval % of Total Alt 4 Reddick Costs									
Alt 4 Retrieval Reddick Costs	0	0	0	0	0	0	0	0	0
Alt 4 Retrieval Actual Costs ($)	0	0	0	0	0	0	0	0	0

ALTERNATIVE 4 RETRIEVAL BASE COST BREAKDOWN	FY13	FY14	FY15	FY16	FY17	FY18	FY19	FY20	FY21
Activity % of Alt 4 Retrieval Base Costs (%)									
Studies/Permitting	0	0	0	0	0	0	0	0	0
Design	0	0	0	0	0	0	0	0	0
Construction/D&D	0	0	0	0	0	0	0	0	0
Operation	0	0	0	0	0	0	0	0	0
Total Percentage	0	0	0	0	0	0	0	0	0
Alt 4 Retrieval Activity Base Costs($)									
Studies/Permitting	0	0	0	0	0	0	0	0	0
Design	0	0	0	0	0	0	0	0	0
Construction/D&D	0	0	0	0	0	0	0	0	0
Operation	0	0	0	0	0	0	0	0	0
Total Cost	0	0	0	0	0	0	0	0	0

ALTERNATIVE 4 RETRIEVAL BASE FTE BREAKDOWN	FY13	FY14	FY15	FY16	FY17	FY18	FY19	FY20	FY21
Contractor Base FTE per Alt 4 Retrieval Activity (FTE)									
STUDIES/PERMITTING - Site Management/Operations	0.0	0.0	0.0	0.0	0.0	0.0	0.0	0.0	0.0
STUDIES/PERMITTING - Site Infrastructure	0.0	0.0	0.0	0.0	0.0	0.0	0.0	0.0	0.0
STUDIES/PERMITTING - National Laboratories	0.0	0.0	0.0	0.0	0.0	0.0	0.0	0.0	0.0
STUDIES/PERMITTING - Site Constructors	0.0	0.0	0.0	0.0	0.0	0.0	0.0	0.0	0.0
STUDIES/PERMITTING - Architecture/Engineering Contract	0.0	0.0	0.0	0.0	0.0	0.0	0.0	0.0	0.0
STUDIES/PERMITTING - Construction Contractor	0.0	0.0	0.0	0.0	0.0	0.0	0.0	0.0	0.0
DESIGN - Site Management/Operations	0.0	0.0	0.0	0.0	0.0	0.0	0.0	0.0	0.0
DESIGN - Site Infrastructure	0.0	0.0	0.0	0.0	0.0	0.0	0.0	0.0	0.0
DESIGN - National Laboratories	0.0	0.0	0.0	0.0	0.0	0.0	0.0	0.0	0.0
DESIGN - Site Constructors	0.0	0.0	0.0	0.0	0.0	0.0	0.0	0.0	0.0
DESIGN - Architecture/Engineering Contractors	0.0	0.0	0.0	0.0	0.0	0.0	0.0	0.0	0.0
DESIGN - Construction Contractor	0.0	0.0	0.0	0.0	0.0	0.0	0.0	0.0	0.0
CONSTRUCTION/D&D - Site Management/Operations	0.0	0.0	0.0	0.0	0.0	0.0	0.0	0.0	0.0
CONSTRUCTION/D&D - Site Infrastructure	0.0	0.0	0.0	0.0	0.0	0.0	0.0	0.0	0.0
CONSTRUCTION/D&D - National Laboratories	0.0	0.0	0.0	0.0	0.0	0.0	0.0	0.0	0.0
CONSTRUCTION/D&D - Site Constructors	0.0	0.0	0.0	0.0	0.0	0.0	0.0	0.0	0.0
CONSTRUCTION/D&D - Architecture/Engineering Contracto	0.0	0.0	0.0	0.0	0.0	0.0	0.0	0.0	0.0
CONSTRUCTION/D&D - Construction Contractor	0.0	0.0	0.0	0.0	0.0	0.0	0.0	0.0	0.0
OPERATIONS - Site Management/Operations	0.0	0.0	0.0	0.0	0.0	0.0	0.0	0.0	0.0
OPERATIONS - Site Infrastructure	0.0	0.0	0.0	0.0	0.0	0.0	0.0	0.0	0.0
OPERATIONS - National Laboratories	0.0	0.0	0.0	0.0	0.0	0.0	0.0	0.0	0.0
OPERATIONS - Site Constructors	0.0	0.0	0.0	0.0	0.0	0.0	0.0	0.0	0.0
OPERATIONS - Architecture/Engineering Contractors	0.0	0.0	0.0	0.0	0.0	0.0	0.0	0.0	0.0
OPERATIONS - Construction Contractor	0.0	0.0	0.0	0.0	0.0	0.0	0.0	0.0	0.0

Worker Category Base FTE (FTE)	FY13	FY14	FY15	FY16	FY17	FY18	FY19	FY20	FY21
Engineer/Management	0.0	0.0	0.0	0.0	0.0	0.0	0.0	0.0	0.0
Crafts	0.0	0.0	0.0	0.0	0.0	0.0	0.0	0.0	0.0
Maintenance	0.0	0.0	0.0	0.0	0.0	0.0	0.0	0.0	0.0
Operators	0.0	0.0	0.0	0.0	0.0	0.0	0.0	0.0	0.0
Infrastructure	0.0	0.0	0.0	0.0	0.0	0.0	0.0	0.0	0.0
Total	0.0	0.0	0.0	0.0	0.0	0.0	0.0	0.0	0.0

FUNCTION - ALTERNATIVE 4 RETRIEVAL	FY22	FY23	FY24	FY25	FY26	FY27	FY28	FY29	FY30	FY31	FY32
Technology Development (Test) Cost	0	0	0	0	0	0	0	0	0	0	0
Retrieve SY-101, SY-103	0	0	0	0	0	0	0	0	0	0	0
Perform Arm-based SST WR Demo C-106	0	0	0	0	0	0	0	0	0	0	0
Project W-151	0	0	0	0	0	0	0	0	0	0	0
Project W-211	0	0	0	0	0	0	0	0	0	0	0
Perform sluicing WR Demo C-106	0	0	0	0	0	0	0	0	0	0	0
Project W-340	0	0	0	0	0	0	0	0	0	0	0
Subtotal Test Costs	0	0	0	0	0	0	0	0	0	0	0
Test Oversight Costs	0	0	0	0	0	0	0	0	0	0	0
Total Retrieval Base Costs	0	0	0	0	0	0	0	0	0	0	0
Total Alt 4 Reddick Costs											
Retrieval % of Total Alt 4 Reddick Costs											
Alt 4 Retrieval Reddick Costs	0	0	0	0	0	0	0	0	0	0	0
Alt 4 Retrieval Actual Costs ($)	0	0	0	0	0	0	0	0	0	0	0

ALTERNATIVE 4 RETRIEVAL BASE COST BREAKDOWN	FY22	FY23	FY24	FY25	FY26	FY27	FY28	FY29	FY30	FY31	FY32
Activity % of Alt 4 Retrieval Base Costs (%)											
Studies/Permitting	0	0	0	0	0	0	0	0	0	0	0
Design	0	0	0	0	0	0	0	0	0	0	0
Construction/D&D	0	0	0	0	0	0	0	0	0	0	0
Operation	0	0	0	0	0	0	0	0	0	0	0
Total Percentage	0	0	0	0	0	0	0	0	0	0	0
Alt 4 Retrieval Activity Base Costs($)											
Studies/Permitting	0	0	0	0	0	0	0	0	0	0	0
Design	0	0	0	0	0	0	0	0	0	0	0
Construction/D&D	0	0	0	0	0	0	0	0	0	0	0
Operation	0	0	0	0	0	0	0	0	0	0	0
Total Cost	0	0	0	0	0	0	0	0	0	0	0

ALTERNATIVE 4 RETRIEVAL BASE FTE BREAKDOWN	FY22	FY23	FY24	FY25	FY26	FY27	FY28	FY29	FY30	FY31	FY32
Contractor Base FTE per Alt 4 Retrieval Activity (FTE)											
STUDIES/PERMITTING - Site Management/Operations	0.0	0.0	0.0	0.0	0.0	0.0	0.0	0.0	0.0	0.0	0.0
STUDIES/PERMITTING - Site Infrastructure	0.0	0.0	0.0	0.0	0.0	0.0	0.0	0.0	0.0	0.0	0.0
STUDIES/PERMITTING - National Laboratories	0.0	0.0	0.0	0.0	0.0	0.0	0.0	0.0	0.0	0.0	0.0
STUDIES/PERMITTING - Site Constructors	0.0	0.0	0.0	0.0	0.0	0.0	0.0	0.0	0.0	0.0	0.0
STUDIES/PERMITTING - Architecture/Engineering Contract	0.0	0.0	0.0	0.0	0.0	0.0	0.0	0.0	0.0	0.0	0.0
STUDIES/PERMITTING - Construction Contractor	0.0	0.0	0.0	0.0	0.0	0.0	0.0	0.0	0.0	0.0	0.0
DESIGN - Site Management/Operations	0.0	0.0	0.0	0.0	0.0	0.0	0.0	0.0	0.0	0.0	0.0
DESIGN - Site Infrastructure	0.0	0.0	0.0	0.0	0.0	0.0	0.0	0.0	0.0	0.0	0.0
DESIGN - National Laboratories	0.0	0.0	0.0	0.0	0.0	0.0	0.0	0.0	0.0	0.0	0.0
DESIGN - Site Constructors	0.0	0.0	0.0	0.0	0.0	0.0	0.0	0.0	0.0	0.0	0.0
DESIGN - Architecture/Engineering Contractors	0.0	0.0	0.0	0.0	0.0	0.0	0.0	0.0	0.0	0.0	0.0
DESIGN - Construction Contractor	0.0	0.0	0.0	0.0	0.0	0.0	0.0	0.0	0.0	0.0	0.0
CONSTRUCTION/D&D - Site Management/Operations	0.0	0.0	0.0	0.0	0.0	0.0	0.0	0.0	0.0	0.0	0.0
CONSTRUCTION/D&D - Site Infrastructure	0.0	0.0	0.0	0.0	0.0	0.0	0.0	0.0	0.0	0.0	0.0
CONSTRUCTION/D&D - National Laboratories	0.0	0.0	0.0	0.0	0.0	0.0	0.0	0.0	0.0	0.0	0.0
CONSTRUCTION/D&D - Site Constructors	0.0	0.0	0.0	0.0	0.0	0.0	0.0	0.0	0.0	0.0	0.0
CONSTRUCTION/D&D - Architecture/Engineering Contracto	0.0	0.0	0.0	0.0	0.0	0.0	0.0	0.0	0.0	0.0	0.0
CONSTRUCTION/D&D - Construction Contractor	0.0	0.0	0.0	0.0	0.0	0.0	0.0	0.0	0.0	0.0	0.0
OPERATIONS - Site Management/Operations	0.0	0.0	0.0	0.0	0.0	0.0	0.0	0.0	0.0	0.0	0.0
OPERATIONS - Site Infrastructure	0.0	0.0	0.0	0.0	0.0	0.0	0.0	0.0	0.0	0.0	0.0
OPERATIONS - National Laboratories	0.0	0.0	0.0	0.0	0.0	0.0	0.0	0.0	0.0	0.0	0.0
OPERATIONS - Site Constructors	0.0	0.0	0.0	0.0	0.0	0.0	0.0	0.0	0.0	0.0	0.0
OPERATIONS - Architecture/Engineering Contractors	0.0	0.0	0.0	0.0	0.0	0.0	0.0	0.0	0.0	0.0	0.0
OPERATIONS - Construction Contractor	0.0	0.0	0.0	0.0	0.0	0.0	0.0	0.0	0.0	0.0	0.0

Worker Category Base FTE (FTE)	FY22	FY23	FY24	FY25	FY26	FY27	FY28	FY29	FY30	FY31	FY32
Engineer/Management	0.0	0.0	0.0	0.0	0.0	0.0	0.0	0.0	0.0	0.0	0.0
Crafts	0.0	0.0	0.0	0.0	0.0	0.0	0.0	0.0	0.0	0.0	0.0
Maintenance	0.0	0.0	0.0	0.0	0.0	0.0	0.0	0.0	0.0	0.0	0.0
Operators	0.0	0.0	0.0	0.0	0.0	0.0	0.0	0.0	0.0	0.0	0.0
Infrastructure	0.0	0.0	0.0	0.0	0.0	0.0	0.0	0.0	0.0	0.0	0.0
Total	0.0	0.0	0.0	0.0	0.0	0.0	0.0	0.0	0.0	0.0	0.0

FUNCTION - ALTERNATIVE 4 RETRIEVAL	FY33	FY34	FY35	FY36	FY37	FY38	FY39	FY40	Totals
Technology Development (Test) Cost	0	0	0	0	0	0	0	0	42,515,879
Retrieve SY-101, SY-103	0	0	0	0	0	0	0	0	2,551,921
Perform Arm-based SST WR Demo C-106	0	0	0	0	0	0	0	0	12,005,861
Project W-151	0	0	0	0	0	0	0	0	14,076,773
Project W-211	0	0	0	0	0	0	0	0	54,507,001
Perform sluicing WR Demo C-106	0	0	0	0	0	0	0	0	9,652,350
Project W-340	0	0	0	0	0	0	0	0	12,608,924
Subtotal Test Costs	0	0	0	0	0	0	0	0	147,918,709
Test Oversight Costs	0	0	0	0	0	0	0	0	14,791,871
Total Retrieval Base Costs	0	0	0	0	0	0	0	0	162,710,580
Total Alt 4 Reddick Costs									199,000,000
Retrieval % of Total Alt 4 Reddick Costs									280
Alt 4 Retrieval Reddick Costs	0	0	0	0	0	0	0	0	39,800,000
Alt 4 Retrieval Actual Costs ($)	0	0	0	0	0	0	0	0	202,510,580

ALTERNATIVE 4 RETRIEVAL BASE COST BREAKDOWN	FY33	FY34	FY35	FY36	FY37	FY38	FY39	FY40	
Activity % of Alt 4 Retrieval Base Costs (%)									
Studies/Permitting	0	0	0	0	0	0	0	0	
Design	0	0	0	0	0	0	0	0	
Construction/D&D	0	0	0	0	0	0	0	0	
Operation	0	0	0	0	0	0	0	0	
Total Percentage	0	0	0	0	0	0	0	0	
Alt 4 Retrieval Activity Base Costs($)									**Totals**
Studies/Permitting	0	0	0	0	0	0	0	0	64,826,682
Design	0	0	0	0	0	0	0	0	27,450,875
Construction/D&D	0	0	0	0	0	0	0	0	27,451,577
Operation	0	0	0	0	0	0	0	0	42,981,446
Total Cost	0	0	0	0	0	0	0	0	162,710,580

ALTERNATIVE 4 RETRIEVAL BASE FTE BREAKDOWN	FY33	FY34	FY35	FY36	FY37	FY38	FY39	FY40	Totals
Contractor Base FTE per Alt 4 Retrieval Activity (FTE)									
STUDIES/PERMITTING - Site Management/Operations	0.0	0.0	0.0	0.0	0.0	0.0	0.0	0.0	295.2
STUDIES/PERMITTING - Site Infrastructure	0.0	0.0	0.0	0.0	0.0	0.0	0.0	0.0	52.1
STUDIES/PERMITTING - National Laboratories	0.0	0.0	0.0	0.0	0.0	0.0	0.0	0.0	87.0
STUDIES/PERMITTING - Site Constructors	0.0	0.0	0.0	0.0	0.0	0.0	0.0	0.0	0.0
STUDIES/PERMITTING - Architecture/Engineering Contract	0.0	0.0	0.0	0.0	0.0	0.0	0.0	0.0	0.0
STUDIES/PERMITTING - Construction Contractor	0.0	0.0	0.0	0.0	0.0	0.0	0.0	0.0	0.0
DESIGN - Site Management/Operations	0.0	0.0	0.0	0.0	0.0	0.0	0.0	0.0	16.7
DESIGN - Site Infrastructure	0.0	0.0	0.0	0.0	0.0	0.0	0.0	0.0	2.9
DESIGN - National Laboratories	0.0	0.0	0.0	0.0	0.0	0.0	0.0	0.0	14.7
DESIGN - Site Constructors	0.0	0.0	0.0	0.0	0.0	0.0	0.0	0.0	9.8
DESIGN - Architecture/Engineering Contractors	0.0	0.0	0.0	0.0	0.0	0.0	0.0	0.0	114.4
DESIGN - Construction Contractor	0.0	0.0	0.0	0.0	0.0	0.0	0.0	0.0	0.0
CONSTRUCTION/D&D - Site Management/Operations	0.0	0.0	0.0	0.0	0.0	0.0	0.0	0.0	8.3
CONSTRUCTION/D&D - Site Infrastructure	0.0	0.0	0.0	0.0	0.0	0.0	0.0	0.0	1.5
CONSTRUCTION/D&D - National Laboratories	0.0	0.0	0.0	0.0	0.0	0.0	0.0	0.0	7.4
CONSTRUCTION/D&D - Site Constructors	0.0	0.0	0.0	0.0	0.0	0.0	0.0	0.0	9.8
CONSTRUCTION/D&D - Architecture/Engineering Contracto	0.0	0.0	0.0	0.0	0.0	0.0	0.0	0.0	7.6
CONSTRUCTION/D&D - Construction Contractor	0.0	0.0	0.0	0.0	0.0	0.0	0.0	0.0	161.5
OPERATIONS - Site Management/Operations	0.0	0.0	0.0	0.0	0.0	0.0	0.0	0.0	143.5
OPERATIONS - Site Infrastructure	0.0	0.0	0.0	0.0	0.0	0.0	0.0	0.0	25.3
OPERATIONS - National Laboratories	0.0	0.0	0.0	0.0	0.0	0.0	0.0	0.0	57.7
OPERATIONS - Site Constructors	0.0	0.0	0.0	0.0	0.0	0.0	0.0	0.0	0.0
OPERATIONS - Architecture/Engineering Contractors	0.0	0.0	0.0	0.0	0.0	0.0	0.0	0.0	0.0
OPERATIONS - Construction Contractor	0.0	0.0	0.0	0.0	0.0	0.0	0.0	0.0	0.0

Worker Category Base FTE (FTE)	FY33	FY34	FY35	FY36	FY37	FY38	FY39	FY40	Totals
Engineer/Management	0.0	0.0	0.0	0.0	0.0	0.0	0.0	0.0	641.4
Crafts	0.0	0.0	0.0	0.0	0.0	0.0	0.0	0.0	131.1
Maintenance	0.0	0.0	0.0	0.0	0.0	0.0	0.0	0.0	60.4
Operators	0.0	0.0	0.0	0.0	0.0	0.0	0.0	0.0	100.6
Infrastructure	0.0	0.0	0.0	0.0	0.0	0.0	0.0	0.0	81.8
Total	0.0	0.0	0.0	0.0	0.0	0.0	0.0	0.0	1,015.4

ALTERNATIVE 4 RETRIEVAL REDDICK COST BREAKDOWN	FY95	FY96	FY97	FY98	FY99	FY00
Activity % of Alt 4 Retrieval Reddick Costs (%)						
Studies/Permitting	100	100	100	0	0	0
Design	0	0	0	100	100	100
Construction/D&D	0	0	0	0	0	0
Operation	0	0	0	0	0	0
Total Percentage	**100**	**100**	**100**	**100**	**100**	**100**
Alt 4 Retrieval Activity Reddick Costs($)						
Studies/Permitting	200,000	200,000	600,000	0	0	0
Design	0	0	0	1,000,000	2,400,000	2,400,000
Construction/D&D	0	0	0	0	0	0
Operation	0	0	0	0	0	0
Total Cost	**200,000**	**200,000**	**600,000**	**1,000,000**	**2,400,000**	**2,400,000**

ALTERNATIVE 4 RETRIEVAL REDDICK FTE BREAKDOWN	FY95	FY96	FY97	FY98	FY99	FY00
Contractor Reddick FTE per Alt 4 Retrieval Activity (FTE)						
STUDIES/PERMITTING - Site Management/Operations	1.2	1.2	3.5	0.0	0.0	0.0
STUDIES/PERMITTING - Site Infrastructure	0.2	0.2	0.6	0.0	0.0	0.0
STUDIES/PERMITTING - National Laboratories	0.1	0.1	0.2	0.0	0.0	0.0
STUDIES/PERMITTING - Site Constructors	0.0	0.0	0.0	0.0	0.0	0.0
STUDIES/PERMITTING - Architecture/Engineering Contract	0.0	0.0	0.0	0.0	0.0	0.0
STUDIES/PERMITTING - Construction Contractor	0.0	0.0	0.0	0.0	0.0	0.0
DESIGN - Site Management/Operations	0.0	0.0	0.0	0.6	1.5	1.5
DESIGN - Site Infrastructure	0.0	0.0	0.0	0.1	0.3	0.3
DESIGN - National Laboratories	0.0	0.0	0.0	0.5	1.3	1.3
DESIGN - Site Constructors	0.0	0.0	0.0	0.4	0.9	0.9
DESIGN - Architecture/Engineering Contractors	0.0	0.0	0.0	4.2	10.0	10.0
DESIGN - Construction Contractor	0.0	0.0	0.0	0.0	0.0	0.0
CONSTRUCTION/D&D - Site Management/Operations	0.0	0.0	0.0	0.0	0.0	0.0
CONSTRUCTION/D&D - Site Infrastructure	0.0	0.0	0.0	0.0	0.0	0.0
CONSTRUCTION/D&D - National Laboratories	0.0	0.0	0.0	0.0	0.0	0.0
CONSTRUCTION/D&D - Site Constructors	0.0	0.0	0.0	0.0	0.0	0.0
CONSTRUCTION/D&D - Architecture/Engineering Contracto	0.0	0.0	0.0	0.0	0.0	0.0
CONSTRUCTION/D&D - Construction Contractor	0.0	0.0	0.0	0.0	0.0	0.0
OPERATIONS - Site Management/Operations	0.0	0.0	0.0	0.0	0.0	0.0
OPERATIONS - Site Infrastructure	0.0	0.0	0.0	0.0	0.0	0.0
OPERATIONS - National Laboratories	0.0	0.0	0.0	0.0	0.0	0.0
OPERATIONS - Site Constructors	0.0	0.0	0.0	0.0	0.0	0.0
OPERATIONS - Architecture/Engineering Contractors	0.0	0.0	0.0	0.0	0.0	0.0
OPERATIONS - Construction Contractor	0.0	0.0	0.0	0.0	0.0	0.0
Worker Category Reddick FTE (FTE)						
Engineer/Management	1.2	1.2	3.6	5.7	13.6	13.6
Crafts	0.0	0.0	0.0	0.0	0.0	0.0
Maintenance	0.0	0.0	0.0	0.0	0.0	0.0
Operators	0.0	0.0	0.0	0.0	0.0	0.0
Infrastructure	0.2	0.2	0.6	0.1	0.3	0.3
Total	**1.4**	**1.4**	**4.2**	**5.8**	**13.9**	**13.9**

ALTERNATIVE 4 RETRIEVAL COST SUMMARY	FY95	FY96	FY97	FY98	FY99	FY00
Studies/Permitting	**20,019,773**	**23,283,298**	**16,746,658**	**3,373,585**	**454,329**	**140,548**
Design	**3,603,595**	**10,259,244**	**8,073,329**	**6,060,377**	**2,854,329**	**2,400,000**
Construction/D&D	**5,405,393**	**5,129,622**	**8,073,329**	**6,747,169**	**1,362,988**	**632,464**
Operation	**7,207,190**	**12,824,055**	**8,073,329**	**1,686,792**	**757,216**	**632,464**
Total	**36,235,952**	**51,496,219**	**40,966,646**	**17,867,924**	**5,428,863**	**3,805,477**

ALTERNATIVE 4 RETRIEVAL FTE.SUMMARY	FY95	FY96	FY97	FY98	FY99	FY00
Engineer/Management	**157.7**	**219.3**	**170.8**	**71.4**	**22.7**	**16.5**
Crafts	**25.8**	**24.5**	**38.6**	**32.2**	**6.5**	**3.0**
Maintenance	**10.1**	**18.0**	**11.3**	**2.4**	**1.1**	**0.9**
Operators	**16.9**	**30.0**	**18.9**	**3.9**	**1.8**	**1.5**
Infrastructure	**21.1**	**27.7**	**19.6**	**4.7**	**1.2**	**0.8**
Total	**231.6**	**319.5**	**259.2**	**114.7**	**33.3**	**22.7**

ALTERNATIVE 4 RETRIEVAL REDDICK COST BREAKDOWN	FY01	FY02	FY03	FY04	FY05	FY06
Activity % of Alt 4 Retrieval Reddick Costs (%)						
Studies/Permitting	0	0	0	0	0	0
Design	0	0	0	0	0	0
Construction/D&D	100	100	100	0	0	0
Operation	0	0	0	100	100	100
Total Percentage	**100**	**100**	**100**	**100**	**100**	**100**
Alt 4 Retrieval Activity Reddick Costs($)						
Studies/Permitting	0	0	0	0	0	0
Design	0	0	0	0	0	0
Construction/D&D	6,000,000	8,000,000	9,000,000	0	0	0
Operation	0	0	0	2,000,000	2,000,000	2,000,000
Total Cost	**6,000,000**	**8,000,000**	**9,000,000**	**2,000,000**	**2,000,000**	**2,000,000**

ALTERNATIVE 4 RETRIEVAL REDDICK FTE BREAKDOWN	FY01	FY02	FY03	FY04	FY05	FY06
Contractor Reddick FTE per Alt 4 Retrieval Activity (FTE)						
STUDIES/PERMITTING - Site Management/Operations	0.0	0.0	0.0	0.0	0.0	0.0
STUDIES/PERMITTING - Site Infrastructure	0.0	0.0	0.0	0.0	0.0	0.0
STUDIES/PERMITTING - National Laboratories	0.0	0.0	0.0	0.0	0.0	0.0
STUDIES/PERMITTING - Site Constructors	0.0	0.0	0.0	0.0	0.0	0.0
STUDIES/PERMITTING - Architecture/Engineering Contract	0.0	0.0	0.0	0.0	0.0	0.0
STUDIES/PERMITTING - Construction Contractor	0.0	0.0	0.0	0.0	0.0	0.0
DESIGN - Site Management/Operations	0.0	0.0	0.0	0.0	0.0	0.0
DESIGN - Site Infrastructure	0.0	0.0	0.0	0.0	0.0	0.0
DESIGN - National Laboratories	0.0	0.0	0.0	0.0	0.0	0.0
DESIGN - Site Constructors	0.0	0.0	0.0	0.0	0.0	0.0
DESIGN - Architecture/Engineering Contractors	0.0	0.0	0.0	0.0	0.0	0.0
DESIGN - Construction Contractor	0.0	0.0	0.0	0.0	0.0	0.0
CONSTRUCTION/D&D - Site Management/Operations	3.6	4.9	5.5	0.0	0.0	0.0
CONSTRUCTION/D&D - Site Infrastructure	0.6	0.9	1.0	0.0	0.0	0.0
CONSTRUCTION/D&D - National Laboratories	0.0	0.0	0.0	0.0	0.0	0.0
CONSTRUCTION/D&D - Site Constructors	2.1	2.9	3.2	0.0	0.0	0.0
CONSTRUCTION/D&D - Architecture/Engineering Contracto	1.7	2.2	2.5	0.0	0.0	0.0
CONSTRUCTION/D&D - Construction Contractor	35.3	47.1	52.9	0.0	0.0	0.0
OPERATIONS - Site Management/Operations	0.0	0.0	0.0	8.5	8.5	8.5
OPERATIONS - Site Infrastructure	0.0	0.0	0.0	1.5	1.5	1.5
OPERATIONS - National Laboratories	0.0	0.0	0.0	1.1	1.1	1.1
OPERATIONS - Site Constructors	0.0	0.0	0.0	0.0	0.0	0.0
OPERATIONS - Architecture/Engineering Contractors	0.0	0.0	0.0	0.0	0.0	0.0
OPERATIONS - Construction Contractor	0.0	0.0	0.0	0.0	0.0	0.0
Worker Category Reddick FTE (FTE)						
Engineer/Management	14.1	18.8	21.1	1.9	1.9	1.9
Crafts	28.7	38.2	43.0	0.0	0.0	0.0
Maintenance	0.0	0.0	0.0	2.9	2.9	2.9
Operators	0.0	0.0	0.0	4.8	4.8	4.8
Infrastructure	0.6	0.9	1.0	1.5	1.5	1.5
Total	**43.4**	**57.9**	**65.1**	**11.1**	**11.1**	**11.1**

ALTERNATIVE 4 RETRIEVAL COST SUMMARY	FY01	FY02	FY03	FY04	FY05	FY06
Studies/Permitting	100,611	580,852	1,054,782	72,245	0	0
Design	0	0	0	0	0	0
Construction/D&D	6,100,611	8,000,000	9,000,000	0	0	0
Operation	301,832	1,355,322	9,493,037	2,650,208	2,000,000	2,000,000
Total	6,503,053	9,936,175	19,547,819	2,722,454	2,000,000	2,000,000

ALTERNATIVE 4 RETRIEVAL FTE SUMMARY	FY01	FY02	FY03	FY04	FY05	FY06
Engineer/Management	15.2	23.5	36.2	2.9	1.9	1.9
Crafts	29.1	38.2	43.0	0.0	0.0	0.0
Maintenance	0.4	1.9	13.3	3.8	2.9	2.9
Operators	0.7	3.2	22.2	6.3	4.8	4.8
Infrastructure	0.9	2.1	7.4	1.9	1.5	1.5
Total	46.4	68.9	122.2	15.0	11.1	11.1

ALTERNATIVE 4 RETRIEVAL REDDICK COST BREAKDOWN	FY07	FY08	FY09	FY10	FY11	FY12
Activity % of Alt 4 Retrieval Reddick Costs (%)						
Studies/Permitting	0	0	0	0	0	0
Design	0	0	0	0	0	0
Construction/D&D	0	0	0	0	0	0
Operation	100	100	0	0	0	0
Total Percentage	**100**	**100**	**0**	**0**	**0**	**0**
Alt 4 Retrieval Activity Reddick Costs($)						
Studies/Permitting	0	0	0	0	0	0
Design	0	0	0	0	0	0
Construction/D&D	0	0	0	0	0	0
Operation	2,000,000	2,000,000	0	0	0	0
Total Cost	**2,000,000**	**2,000,000**	**0**	**0**	**0**	**0**

ALTERNATIVE 4 RETRIEVAL REDDICK FTE BREAKDOWN	FY07	FY08	FY09	FY10	FY11	FY12
Contractor Reddick FTE per Alt 4 Retrieval Activity (FTE)						
STUDIES/PERMITTING - Site Management/Operations	0.0	0.0	0.0	0.0	0.0	0.0
STUDIES/PERMITTING - Site Infrastructure	0.0	0.0	0.0	0.0	0.0	0.0
STUDIES/PERMITTING - National Laboratories	0.0	0.0	0.0	0.0	0.0	0.0
STUDIES/PERMITTING - Site Constructors	0.0	0.0	0.0	0.0	0.0	0.0
STUDIES/PERMITTING - Architecture/Engineering Contract	0.0	0.0	0.0	0.0	0.0	0.0
STUDIES/PERMITTING - Construction Contractor	0.0	0.0	0.0	0.0	0.0	0.0
DESIGN - Site Management/Operations	0.0	0.0	0.0	0.0	0.0	0.0
DESIGN - Site Infrastructure	0.0	0.0	0.0	0.0	0.0	0.0
DESIGN - National Laboratories	0.0	0.0	0.0	0.0	0.0	0.0
DESIGN - Site Constructors	0.0	0.0	0.0	0.0	0.0	0.0
DESIGN - Architecture/Engineering Contractors	0.0	0.0	0.0	0.0	0.0	0.0
DESIGN - Construction Contractor	0.0	0.0	0.0	0.0	0.0	0.0
CONSTRUCTION/D&D - Site Management/Operations	0.0	0.0	0.0	0.0	0.0	0.0
CONSTRUCTION/D&D - Site Infrastructure	0.0	0.0	0.0	0.0	0.0	0.0
CONSTRUCTION/D&D - National Laboratories	0.0	0.0	0.0	0.0	0.0	0.0
CONSTRUCTION/D&D - Site Constructors	0.0	0.0	0.0	0.0	0.0	0.0
CONSTRUCTION/D&D - Architecture/Engineering Contracto	0.0	0.0	0.0	0.0	0.0	0.0
CONSTRUCTION/D&D - Construction Contractor	0.0	0.0	0.0	0.0	0.0	0.0
OPERATIONS - Site Management/Operations	8.5	8.5	0.0	0.0	0.0	0.0
OPERATIONS - Site Infrastructure	1.5	1.5	0.0	0.0	0.0	0.0
OPERATIONS - National Laboratories	1.1	1.1	0.0	0.0	0.0	0.0
OPERATIONS - Site Constructors	0.0	0.0	0.0	0.0	0.0	0.0
OPERATIONS - Architecture/Engineering Contractors	0.0	0.0	0.0	0.0	0.0	0.0
OPERATIONS - Construction Contractor	0.0	0.0	0.0	0.0	0.0	0.0
Worker Category Reddick FTE (FTE)						
Engineer/Management	1.9	1.9	0.0	0.0	0.0	0.0
Crafts	0.0	0.0	0.0	0.0	0.0	0.0
Maintenance	2.9	2.9	0.0	0.0	0.0	0.0
Operators	4.8	4.8	0.0	0.0	0.0	0.0
Infrastructure	1.5	1.5	0.0	0.0	0.0	0.0
Total	**11.1**	**11.1**	**0.0**	**0.0**	**0.0**	**0.0**

ALTERNATIVE 4 RETRIEVAL COST SUMMARY	FY07	FY08	FY09	FY10	FY11	FY12
Studies/Permitting	**0**	**0**	**0**	**0**	**0**	**0**
Design	**0**	**0**	**0**	**0**	**0**	**0**
Construction/D&D	**0**	**0**	**0**	**0**	**0**	**0**
Operation	**2,000,000**	**2,000,000**	**0**	**0**	**0**	**0**
Total	**2,000,000**	**2,000,000**	**0**	**0**	**0**	**0**

ALTERNATIVE 4 RETRIEVAL FTE SUMMARY	FY07	FY08	FY09	FY10	FY11	FY12
Engineer/Management	**1.9**	**1.9**	**0.0**	**0.0**	**0.0**	**0.0**
Crafts	**0.0**	**0.0**	**0.0**	**0.0**	**0.0**	**0.0**
Maintenance	**2.9**	**2.9**	**0.0**	**0.0**	**0.0**	**0.0**
Operators	**4.8**	**4.8**	**0.0**	**0.0**	**0.0**	**0.0**
Infrastructure	**1.5**	**1.5**	**0.0**	**0.0**	**0.0**	**0.0**
Total	**11.1**	**11.1**	**0.0**	**0.0**	**0.0**	**0.0**

ALTERNATIVE 4 RETRIEVAL REDDICK COST BREAKDOWN	FY13	FY14	FY15	FY16	FY17	FY18	FY19	FY20	FY21
Activity % of Alt 4 Retrieval Reddick Costs (%)									
Studies/Permitting	0	0	0	0	0	0	0	0	0
Design	0	0	0	0	0	0	0	0	0
Construction/D&D	0	0	0	0	0	0	0	0	0
Operation	0	0	0	0	0	0	0	0	0
Total Percentage	0	0	0	0	0	0	0	0	0
Alt 4 Retrieval Activity Reddick Costs($)									
Studies/Permitting	0	0	0	0	0	0	0	0	0
Design	0	0	0	0	0	0	0	0	0
Construction/D&D	0	0	0	0	0	0	0	0	0
Operation	0	0	0	0	0	0	0	0	0
Total Cost	0	0	0	0	0	0	0	0	0

ALTERNATIVE 4 RETRIEVAL REDDICK FTE BREAKDOWN	FY13	FY14	FY15	FY16	FY17	FY18	FY19	FY20	FY21
Contractor Reddick FTE per Alt 4 Retrieval Activity (FTE)									
STUDIES/PERMITTING - Site Management/Operations	0.0	0.0	0.0	0.0	0.0	0.0	0.0	0.0	0.0
STUDIES/PERMITTING - Site Infrastructure	0.0	0.0	0.0	0.0	0.0	0.0	0.0	0.0	0.0
STUDIES/PERMITTING - National Laboratories	0.0	0.0	0.0	0.0	0.0	0.0	0.0	0.0	0.0
STUDIES/PERMITTING - Site Constructors	0.0	0.0	0.0	0.0	0.0	0.0	0.0	0.0	0.0
STUDIES/PERMITTING - Architecture/Engineering Contract	0.0	0.0	0.0	0.0	0.0	0.0	0.0	0.0	0.0
STUDIES/PERMITTING - Construction Contractor	0.0	0.0	0.0	0.0	0.0	0.0	0.0	0.0	0.0
DESIGN - Site Management/Operations	0.0	0.0	0.0	0.0	0.0	0.0	0.0	0.0	0.0
DESIGN - Site Infrastructure	0.0	0.0	0.0	0.0	0.0	0.0	0.0	0.0	0.0
DESIGN - National Laboratories	0.0	0.0	0.0	0.0	0.0	0.0	0.0	0.0	0.0
DESIGN - Site Constructors	0.0	0.0	0.0	0.0	0.0	0.0	0.0	0.0	0.0
DESIGN - Architecture/Engineering Contractors	0.0	0.0	0.0	0.0	0.0	0.0	0.0	0.0	0.0
DESIGN - Construction Contractor	0.0	0.0	0.0	0.0	0.0	0.0	0.0	0.0	0.0
CONSTRUCTION/D&D - Site Management/Operations	0.0	0.0	0.0	0.0	0.0	0.0	0.0	0.0	0.0
CONSTRUCTION/D&D - Site Infrastructure	0.0	0.0	0.0	0.0	0.0	0.0	0.0	0.0	0.0
CONSTRUCTION/D&D - National Laboratories	0.0	0.0	0.0	0.0	0.0	0.0	0.0	0.0	0.0
CONSTRUCTION/D&D - Site Constructors	0.0	0.0	0.0	0.0	0.0	0.0	0.0	0.0	0.0
CONSTRUCTION/D&D - Architecture/Engineering Contracto	0.0	0.0	0.0	0.0	0.0	0.0	0.0	0.0	0.0
CONSTRUCTION/D&D - Construction Contractor	0.0	0.0	0.0	0.0	0.0	0.0	0.0	0.0	0.0
OPERATIONS - Site Management/Operations	0.0	0.0	0.0	0.0	0.0	0.0	0.0	0.0	0.0
OPERATIONS - Site Infrastructure	0.0	0.0	0.0	0.0	0.0	0.0	0.0	0.0	0.0
OPERATIONS - National Laboratories	0.0	0.0	0.0	0.0	0.0	0.0	0.0	0.0	0.0
OPERATIONS - Site Constructors	0.0	0.0	0.0	0.0	0.0	0.0	0.0	0.0	0.0
OPERATIONS - Architecture/Engineering Contractors	0.0	0.0	0.0	0.0	0.0	0.0	0.0	0.0	0.0
OPERATIONS - Construction Contractor	0.0	0.0	0.0	0.0	0.0	0.0	0.0	0.0	0.0
Worker Category Reddick FTE (FTE)									
Engineer/Management	0.0	0.0	0.0	0.0	0.0	0.0	0.0	0.0	0.0
Crafts	0.0	0.0	0.0	0.0	0.0	0.0	0.0	0.0	0.0
Maintenance	0.0	0.0	0.0	0.0	0.0	0.0	0.0	0.0	0.0
Operators	0.0	0.0	0.0	0.0	0.0	0.0	0.0	0.0	0.0
Infrastructure	0.0	0.0	0.0	0.0	0.0	0.0	0.0	0.0	0.0
Total	0.0	0.0	0.0	0.0	0.0	0.0	0.0	0.0	0.0

ALTERNATIVE 4 RETRIEVAL COST SUMMARY	FY13	FY14	FY15	FY16	FY17	FY18	FY19	FY20	FY21
Studies/Permitting	0	0	0	0	0	0	0	0	0
Design	0	0	0	0	0	0	0	0	0
Construction/D&D	0	0	0	0	0	0	0	0	0
Operation	0	0	0	0	0	0	0	0	0
Total	0	0	0	0	0	0	0	0	0

ALTERNATIVE 4 RETRIEVAL FTE SUMMARY	FY13	FY14	FY15	FY16	FY17	FY18	FY19	FY20	FY21
Engineer/Management	0.0	0.0	0.0	0.0	0.0	0.0	0.0	0.0	0.0
Crafts	0.0	0.0	0.0	0.0	0.0	0.0	0.0	0.0	0.0
Maintenance	0.0	0.0	0.0	0.0	0.0	0.0	0.0	0.0	0.0
Operators	0.0	0.0	0.0	0.0	0.0	0.0	0.0	0.0	0.0
Infrastructure	0.0	0.0	0.0	0.0	0.0	0.0	0.0	0.0	0.0
Total	0.0	0.0	0.0	0.0	0.0	0.0	0.0	0.0	0.0

ALTERNATIVE 4 RETRIEVAL REDDICK COST BREAKDOWN	FY22	FY23	FY24	FY25	FY26	FY27	FY28	FY29	FY30	FY31	FY32
Activity % of Alt 4 Retrieval Reddick Costs (%)											
Studies/Permitting	0	0	0	0	0	0	0	0	0	0	0
Design	0	0	0	0	0	0	0	0	0	0	0
Construction/D&D	0	0	0	0	0	0	0	0	0	0	0
Operation	0	0	0	0	0	0	0	0	0	0	0
Total Percentage	0	0	0	0	0	0	0	0	0	0	0
Alt 4 Retrieval Activity Reddick Costs($)											
Studies/Permitting	0	0	0	0	0	0	0	0	0	0	0
Design	0	0	0	0	0	0	0	0	0	0	0
Construction/D&D	0	0	0	0	0	0	0	0	0	0	0
Operation	0	0	0	0	0	0	0	0	0	0	0
Total Cost	0	0	0	0	0	0	0	0	0	0	0

ALTERNATIVE 4 RETRIEVAL REDDICK FTE BREAKDOWN	FY22	FY23	FY24	FY25	FY26	FY27	FY28	FY29	FY30	FY31	FY32
Contractor Reddick FTE per Alt 4 Retrieval Activity (FTE)											
STUDIES/PERMITTING - Site Management/Operations	0.0	0.0	0.0	0.0	0.0	0.0	0.0	0.0	0.0	0.0	0.0
STUDIES/PERMITTING - Site Infrastructure	0.0	0.0	0.0	0.0	0.0	0.0	0.0	0.0	0.0	0.0	0.0
STUDIES/PERMITTING - National Laboratories	0.0	0.0	0.0	0.0	0.0	0.0	0.0	0.0	0.0	0.0	0.0
STUDIES/PERMITTING - Site Constructors	0.0	0.0	0.0	0.0	0.0	0.0	0.0	0.0	0.0	0.0	0.0
STUDIES/PERMITTING - Architecture/Engineering Contract	0.0	0.0	0.0	0.0	0.0	0.0	0.0	0.0	0.0	0.0	0.0
STUDIES/PERMITTING - Construction Contractor	0.0	0.0	0.0	0.0	0.0	0.0	0.0	0.0	0.0	0.0	0.0
DESIGN - Site Management/Operations	0.0	0.0	0.0	0.0	0.0	0.0	0.0	0.0	0.0	0.0	0.0
DESIGN - Site Infrastructure	0.0	0.0	0.0	0.0	0.0	0.0	0.0	0.0	0.0	0.0	0.0
DESIGN - National Laboratories	0.0	0.0	0.0	0.0	0.0	0.0	0.0	0.0	0.0	0.0	0.0
DESIGN - Site Constructors	0.0	0.0	0.0	0.0	0.0	0.0	0.0	0.0	0.0	0.0	0.0
DESIGN - Architecture/Engineering Contractors	0.0	0.0	0.0	0.0	0.0	0.0	0.0	0.0	0.0	0.0	0.0
DESIGN - Construction Contractor	0.0	0.0	0.0	0.0	0.0	0.0	0.0	0.0	0.0	0.0	0.0
CONSTRUCTION/D&D - Site Management/Operations	0.0	0.0	0.0	0.0	0.0	0.0	0.0	0.0	0.0	0.0	0.0
CONSTRUCTION/D&D - Site Infrastructure	0.0	0.0	0.0	0.0	0.0	0.0	0.0	0.0	0.0	0.0	0.0
CONSTRUCTION/D&D - National Laboratories	0.0	0.0	0.0	0.0	0.0	0.0	0.0	0.0	0.0	0.0	0.0
CONSTRUCTION/D&D - Site Constructors	0.0	0.0	0.0	0.0	0.0	0.0	0.0	0.0	0.0	0.0	0.0
CONSTRUCTION/D&D - Architecture/Engineering Contracto	0.0	0.0	0.0	0.0	0.0	0.0	0.0	0.0	0.0	0.0	0.0
CONSTRUCTION/D&D - Construction Contractor	0.0	0.0	0.0	0.0	0.0	0.0	0.0	0.0	0.0	0.0	0.0
OPERATIONS - Site Management/Operations	0.0	0.0	0.0	0.0	0.0	0.0	0.0	0.0	0.0	0.0	0.0
OPERATIONS - Site Infrastructure	0.0	0.0	0.0	0.0	0.0	0.0	0.0	0.0	0.0	0.0	0.0
OPERATIONS - National Laboratories	0.0	0.0	0.0	0.0	0.0	0.0	0.0	0.0	0.0	0.0	0.0
OPERATIONS - Site Constructors	0.0	0.0	0.0	0.0	0.0	0.0	0.0	0.0	0.0	0.0	0.0
OPERATIONS - Architecture/Engineering Contractors	0.0	0.0	0.0	0.0	0.0	0.0	0.0	0.0	0.0	0.0	0.0
OPERATIONS - Construction Contractor	0.0	0.0	0.0	0.0	0.0	0.0	0.0	0.0	0.0	0.0	0.0
Worker Category Reddick FTE (FTE)											
Engineer/Management	0.0	0.0	0.0	0.0	0.0	0.0	0.0	0.0	0.0	0.0	0.0
Crafts	0.0	0.0	0.0	0.0	0.0	0.0	0.0	0.0	0.0	0.0	0.0
Maintenance	0.0	0.0	0.0	0.0	0.0	0.0	0.0	0.0	0.0	0.0	0.0
Operators	0.0	0.0	0.0	0.0	0.0	0.0	0.0	0.0	0.0	0.0	0.0
Infrastructure	0.0	0.0	0.0	0.0	0.0	0.0	0.0	0.0	0.0	0.0	0.0
Total	0.0	0.0	0.0	0.0	0.0	0.0	0.0	0.0	0.0	0.0	0.0

ALTERNATIVE 4 RETRIEVAL COST SUMMARY	FY22	FY23	FY24	FY25	FY26	FY27	FY28	FY29	FY30	FY31	FY32
Studies/Permitting	0	0	0	0	0	0	0	0	0	0	0
Design	0	0	0	0	0	0	0	0	0	0	0
Construction/D&D	0	0	0	0	0	0	0	0	0	0	0
Operation	0	0	0	0	0	0	0	0	0	0	0
Total	0	0	0	0	0	0	0	0	0	0	0

ALTERNATIVE 4 RETRIEVAL FTE SUMMARY	FY22	FY23	FY24	FY25	FY26	FY27	FY28	FY29	FY30	FY31	FY32
Engineer/Management	0.0	0.0	0.0	0.0	0.0	0.0	0.0	0.0	0.0	0.0	0.0
Crafts	0.0	0.0	0.0	0.0	0.0	0.0	0.0	0.0	0.0	0.0	0.0
Maintenance	0.0	0.0	0.0	0.0	0.0	0.0	0.0	0.0	0.0	0.0	0.0
Operators	0.0	0.0	0.0	0.0	0.0	0.0	0.0	0.0	0.0	0.0	0.0
Infrastructure	0.0	0.0	0.0	0.0	0.0	0.0	0.0	0.0	0.0	0.0	0.0
Total	0.0	0.0	0.0	0.0	0.0	0.0	0.0	0.0	0.0	0.0	0.0

ALTERNATIVE 4 RETRIEVAL REDDICK COST BREAKDOWN	FY33	FY34	FY35	FY36	FY37	FY38	FY39	FY40	
Activity % of Alt 4 Retrieval Reddick Costs (%)									
Studies/Permitting	0	0	0	0	0	0	0	0	
Design	0	0	0	0	0	0	0	0	
Construction/D&D	0	0	0	0	0	0	0	0	
Operation	0	0	0	0	0	0	0	0	
Total Percentage	0	0	0	0	0	0	0	0	
Alt 4 Retrieval Activity Reddick Costs($)									**Totals**
Studies/Permitting	0	0	0	0	0	0	0	0	1,000,000
Design	0	0	0	0	0	0	0	0	5,800,000
Construction/D&D	0	0	0	0	0	0	0	0	23,000,000
Operation	0	0	0	0	0	0	0	0	10,000,000
Total Cost	0	0	0	0	0	0	0	0	39,800,000

ALTERNATIVE 4 RETRIEVAL REDDICK FTE BREAKDOWN	FY33	FY34	FY35	FY36	FY37	FY38	FY39	FY40	Totals
Contractor Reddick FTE per Alt 4 Retrieval Activity (FTE)									
STUDIES/PERMITTING - Site Management/Operations	0.0	0.0	0.0	0.0	0.0	0.0	0.0	0.0	5.8
STUDIES/PERMITTING - Site Infrastructure	0.0	0.0	0.0	0.0	0.0	0.0	0.0	0.0	1.0
STUDIES/PERMITTING - National Laboratories	0.0	0.0	0.0	0.0	0.0	0.0	0.0	0.0	0.3
STUDIES/PERMITTING - Site Constructors	0.0	0.0	0.0	0.0	0.0	0.0	0.0	0.0	0.0
STUDIES/PERMITTING - Architecture/Engineering Contract	0.0	0.0	0.0	0.0	0.0	0.0	0.0	0.0	0.0
STUDIES/PERMITTING - Construction Contractor	0.0	0.0	0.0	0.0	0.0	0.0	0.0	0.0	0.0
DESIGN - Site Management/Operations	0.0	0.0	0.0	0.0	0.0	0.0	0.0	0.0	3.5
DESIGN - Site Infrastructure	0.0	0.0	0.0	0.0	0.0	0.0	0.0	0.0	0.6
DESIGN - National Laboratories	0.0	0.0	0.0	0.0	0.0	0.0	0.0	0.0	3.1
DESIGN - Site Constructors	0.0	0.0	0.0	0.0	0.0	0.0	0.0	0.0	2.1
DESIGN - Architecture/Engineering Contractors	0.0	0.0	0.0	0.0	0.0	0.0	0.0	0.0	24.2
DESIGN - Construction Contractor	0.0	0.0	0.0	0.0	0.0	0.0	0.0	0.0	0.0
CONSTRUCTION/D&D - Site Management/Operations	0.0	0.0	0.0	0.0	0.0	0.0	0.0	0.0	14.0
CONSTRUCTION/D&D - Site Infrastructure	0.0	0.0	0.0	0.0	0.0	0.0	0.0	0.0	2.5
CONSTRUCTION/D&D - National Laboratories	0.0	0.0	0.0	0.0	0.0	0.0	0.0	0.0	0.0
CONSTRUCTION/D&D - Site Constructors	0.0	0.0	0.0	0.0	0.0	0.0	0.0	0.0	8.2
CONSTRUCTION/D&D - Architecture/Engineering Contracto	0.0	0.0	0.0	0.0	0.0	0.0	0.0	0.0	6.4
CONSTRUCTION/D&D - Construction Contractor	0.0	0.0	0.0	0.0	0.0	0.0	0.0	0.0	135.3
OPERATIONS - Site Management/Operations	0.0	0.0	0.0	0.0	0.0	0.0	0.0	0.0	42.5
OPERATIONS - Site Infrastructure	0.0	0.0	0.0	0.0	0.0	0.0	0.0	0.0	7.5
OPERATIONS - National Laboratories	0.0	0.0	0.0	0.0	0.0	0.0	0.0	0.0	5.4
OPERATIONS - Site Constructors	0.0	0.0	0.0	0.0	0.0	0.0	0.0	0.0	0.0
OPERATIONS - Architecture/Engineering Contractors	0.0	0.0	0.0	0.0	0.0	0.0	0.0	0.0	0.0
OPERATIONS - Construction Contractor	0.0	0.0	0.0	0.0	0.0	0.0	0.0	0.0	0.0
Worker Category Reddick FTE (FTE)									
Engineer/Management	0.0	0.0	0.0	0.0	0.0	0.0	0.0	0.0	102.5
Crafts	0.0	0.0	0.0	0.0	0.0	0.0	0.0	0.0	109.9
Maintenance	0.0	0.0	0.0	0.0	0.0	0.0	0.0	0.0	14.4
Operators	0.0	0.0	0.0	0.0	0.0	0.0	0.0	0.0	23.9
Infrastructure	0.0	0.0	0.0	0.0	0.0	0.0	0.0	0.0	11.6
Total	0.0	0.0	0.0	0.0	0.0	0.0	0.0	0.0	262.2

ALTERNATIVE 4 RETRIEVAL COST SUMMARY	FY33	FY34	FY35	FY36	FY37	FY38	FY39	FY40	Totals
Studies/Permitting	0	0	0	0	0	0	0	0	65,826,682
Design	0	0	0	0	0	0	0	0	33,250,875
Construction/D&D	0	0	0	0	0	0	0	0	50,451,577
Operation	0	0	0	0	0	0	0	0	52,981,446
Total	0	0	0	0	0	0	0	0	202,510,580

ALTERNATIVE 4 RETRIEVAL FTE SUMMARY	FY33	FY34	FY35	FY36	FY37	FY38	FY39	FY40	Totals
Engineer/Management	0.0	0.0	0.0	0.0	0.0	0.0	0.0	0.0	743.9
Crafts	0.0	0.0	0.0	0.0	0.0	0.0	0.0	0.0	241.0
Maintenance	0.0	0.0	0.0	0.0	0.0	0.0	0.0	0.0	74.7
Operators	0.0	0.0	0.0	0.0	0.0	0.0	0.0	0.0	124.5
Infrastructure	0.0	0.0	0.0	0.0	0.0	0.0	0.0	0.0	93.4
Total	0.0	0.0	0.0	0.0	0.0	0.0	0.0	0.0	1,277.6

FUNCTION - ALTERNATIVE 4 PRETREATMENT	FY95	FY96	FY97	FY98	FY99	FY00
Technology Development (Test) Cost	17,262,028	16,119,000	16,086,284	11,575,785	11,575,785	4,758,768
Operate LLW Pretreatment Mod 1 Facility First Year (Hot Test)	0	0	0	0	0	0
Operate LLW Pretreatment Mod 2 Facility First Year (Hot Test)	0	0	0	0	0	0
Prepare for Start Up In Tank Processing	0	0	1,063,794	12,714,867	1,114,451	0
Start-up In-Tank Processing	0	0	0	0	3,718,683	4,075,936
Start-up and Operate Pretreatment Pilot Testing	0	0	2,744,937	10,936,178	10,936,178	1,786,388
Continue Operation of Pilot Testing	0	0				11,015,598
Tank AZ-101 Sludge Test (PSW49XXX)	959,856	1,267,219	997,975	10,625,079	37,644	0
Prep LLW Pretreatment Mod 1 Facility For Start-up Phase 2 (Co	0	0	0	0	0	0
Prep LLW Pretreatment Mod 2 Facility For Start-up Phase 2 (Co	0	0	0	0	0	0
WESF Hot Cell Test (PDW211XX)	12,369,178	10,792,515	8,701,654	5,232,769	867,496	0
Operate HLW Pretreatment Facility - First Year (Hot Test)	0	0	0	0	0	0
Prepare HLW Pretreatment Facility for Start-up (Cold Test)	0	0	0	0	0	0
Subtotal Test Costs	30,591,062	28,178,734	29,594,644	51,084,678	28,250,237	21,636,690
Test Oversight Costs	3,059,106	2,817,873	2,959,464	5,108,468	2,825,024	2,163,669
Total Pretreatment Base Costs	33,650,168	30,996,607	32,554,108	56,193,146	31,075,261	23,800,359
Total Alt 4 Reddick Costs	1,000,000	1,000,000	3,000,000	5,000,000	12,000,000	12,000,000
Pretreatment % of Total Alt 4 Reddick Costs	20	20	20	20	20	20
Alt 4 Pretreatment Reddick Costs	200,000	200,000	600,000	1,000,000	2,400,000	2,400,000
Alt 4 Pretreatment Actual Costs ($)	33,850,168	31,196,607	33,154,108	57,193,146	33,475,261	26,200,359

ALTERNATIVE 4 PRETREATMENT BASE COST BREAKDOWN	FY95	FY96	FY97	FY98	FY99	FY00
Activity % of Alt 4 Pretreatment Base Costs (%)						
Studies/Permitting	20	20	20	10	15	15
Design	5	5	5	5	5	5
Construction/D&D	25	25	25	10	5	5
Operation	50	50	50	75	75	75
Total Percentage	100	100	100	100	100	100
Alt 4 Pretreatment Activity Base Costs($)						
Studies/Permitting	6,730,034	6,199,321	6,510,822	5,619,315	4,661,289	3,570,054
Design	1,682,508	1,549,830	1,627,705	2,809,657	1,553,763	1,190,018
Construction/D&D	8,412,542	7,749,152	8,138,527	5,619,315	1,553,763	1,190,018
Operation	16,825,084	15,498,304	16,277,054	42,144,859	23,308,446	17,850,269
Total Cost	33,650,168	30,996,607	32,554,108	56,193,146	31,075,261	23,800,359

ALTERNATIVE 4 PRETREATMENT BASE FTE BREAKDOWN	FY95	FY96	FY97	FY98	FY99	FY00
Contractor Base FTE per Alt 4 Pretreatment Activity (FTE)						
STUDIES/PERMITTING - Site Management/Operations	30.6	28.2	29.6	25.6	21.2	16.3
STUDIES/PERMITTING - Site Infrastructure	5.4	5.0	5.2	4.5	3.7	2.9
STUDIES/PERMITTING - National Laboratories	9.0	8.3	8.7	7.5	6.3	4.8
STUDIES/PERMITTING - Site Constructors	0.0	0.0	0.0	0.0	0.0	0.0
STUDIES/PERMITTING - Architecture/Engineering Contractors	0.0	0.0	0.0	0.0	0.0	0.0
STUDIES/PERMITTING - Construction Contractor	0.0	0.0	0.0	0.0	0.0	0.0
DESIGN - Site Management/Operations	1.0	0.9	1.0	1.7	0.9	0.7
DESIGN - Site Infrastructure	0.2	0.2	0.2	0.3	0.2	0.1
DESIGN - National Laboratories	0.9	0.8	0.9	1.5	0.8	0.6
DESIGN - Site Constructors	0.6	0.6	0.6	1.0	0.6	0.4
DESIGN - Architecture/Engineering Contractors	7.0	6.5	6.8	11.7	6.5	5.0
DESIGN - Construction Contractor	0.0	0.0	0.0	0.0	0.0	0.0
CONSTRUCTION/D&D - Site Management/Operations	2.6	2.4	2.5	1.7	0.5	0.4
CONSTRUCTION/D&D - Site Infrastructure	0.5	0.4	0.4	0.3	0.1	0.1
CONSTRUCTION/D&D - National Laboratories	2.3	2.1	2.2	1.5	0.4	0.3
CONSTRUCTION/D&D - Site Constructors	3.0	2.8	2.9	2.0	0.6	0.4
CONSTRUCTION/D&D - Architecture/Engineering Contractors	2.3	2.2	2.3	1.6	0.4	0.3
CONSTRUCTION/D&D - Construction Contractor	49.5	45.6	47.9	33.1	9.1	7.0
OPERATIONS - Site Management/Operations	56.2	51.8	54.4	140.7	77.8	59.6
OPERATIONS - Site Infrastructure	9.9	9.1	9.6	24.8	13.7	10.5
OPERATIONS - National Laboratories	22.6	20.8	21.8	56.5	31.3	23.9
OPERATIONS - Site Constructors	0.0	0.0	0.0	0.0	0.0	0.0
OPERATIONS - Architecture/Engineering Contractors	0.0	0.0	0.0	0.0	0.0	0.0
OPERATIONS - Construction Contractor	0.0	0.0	0.0	0.0	0.0	0.0

Worker Category Base FTE (FTE)	FY95	FY96	FY97	FY98	FY99	FY00
Engineer/Management	84.4	77.8	81.7	101.5	81.7	47.3
Crafts	40.2	37.0	38.9	26.8	7.4	5.7
Maintenance	23.6	21.8	22.9	59.2	32.7	25.1
Operators	39.4	36.3	38.1	98.6	54.5	41.8
Infrastructure	16.0	14.7	15.4	30.0	17.7	13.6
Total	203.6	187.5	196.9	316.1	174.1	133.4

FUNCTION - ALTERNATIVE 4 PRETREATMENT	FY01	FY02	FY03	FY04	FY05	FY06
Technology Development (Test) Cost	4,739,809	800,285	500,285	0	0	0
Operate LLW Pretreatment Mod 1 Facility First Year (Hot Test)	0	0	0	0	38,794,388	12,520,940
Operate LLW Pretreatment Mod 2 Facility First Year (Hot Test)	0	0	0	0		20,418,986
Prepare for Start Up In Tank Processing	0	0	0	0	0	0
Start-up In-Tank Processing	4,059,698	4,075,936	4,075,936	4,092,175	341,015	0
Start-up and Operate Pretreatment Pilot Testing	0	0	0	0	0	0
Continue Operation of Pilot Testing	13,113,807	2,255,575	0	0	0	0
Tank AZ-101 Sludge Test (PSW49XXX)	0	0	0	0	0	0
Prep LLW Pretreatment Mod 1 Facility For Start-up Phase 2 (Co	0	0	0	11,059,206	3,608,794	0
Prep LLW Pretreatment Mod 2 Facility For Start-up Phase 2 (Co	0	0	0		17,903,592	5,778,408
WESF Hot Cell Test (PDW211XX)	0	0	0	0	0	0
Operate HLW Pretreatment Facility - First Year (Hot Test)	0	0	0	0	0	0
Prepare HLW Pretreatment Facility for Start-up (Cold Test)	0	0	0	0	0	0
Subtotal Test Costs	21,913,314	7,131,796	4,576,221	15,151,381	60,647,789	38,718,334
Test Oversight Costs	2,191,331	713,180	457,622	1,515,138	6,064,779	3,871,833
Total Pretreatment Base Costs	24,104,645	7,844,976	5,033,843	16,666,519	66,712,568	42,590,167
Total Alt 4 Reddick Costs	30,000,000	40,000,000	45,000,000	10,000,000	10,000,000	10,000,000
Pretreatment % of Total Alt 4 Reddick Costs	20	20	20	20	20	20
Alt 4 Pretreatment Reddick Costs	6,000,000	8,000,000	9,000,000	2,000,000	2,000,000	2,000,000
Alt 4 Pretreatment Actual Costs ($)	30,104,645	15,844,976	14,033,843	18,666,519	68,712,568	44,590,167

ALTERNATIVE 4 PRETREATMENT BASE COST BREAKDOWN	FY01	FY02	FY03	FY04	FY05	FY06
Activity % of Alt 4 Pretreatment Base Costs (%)						
Studies/Permitting	15	10	10	10	5	5
Design	5	0	0	0	0	0
Construction/D&D	0	0	0	0	0	0
Operation	80	90	90	90	95	95
Total Percentage	100	100	100	100	100	100
Alt 4 Pretreatment Activity Base Costs($)						
Studies/Permitting	3,615,697	784,498	503,384	1,666,652	3,335,628	2,129,508
Design	1,205,232	0	0	0	0	0
Construction/D&D	0	0	0	0	0	0
Operation	19,283,716	7,060,478	4,530,459	14,999,867	63,376,940	40,460,659
Total Cost	24,104,645	7,844,976	5,033,843	16,666,519	66,712,568	42,590,167

ALTERNATIVE 4 PRETREATMENT BASE FTE BREAKDOWN	FY01	FY02	FY03	FY04	FY05	FY06
Contractor Base FTE per Alt 4 Pretreatment Activity (FTE)						
STUDIES/PERMITTING - Site Management/Operations	16.5	3.6	2.3	7.6	15.2	9.7
STUDIES/PERMITTING - Site Infrastructure	2.9	0.6	0.4	1.3	2.7	1.7
STUDIES/PERMITTING - National Laboratories	4.9	1.1	0.7	2.2	4.5	2.9
STUDIES/PERMITTING - Site Constructors	0.0	0.0	0.0	0.0	0.0	0.0
STUDIES/PERMITTING - Architecture/Engineering Contractors	0.0	0.0	0.0	0.0	0.0	0.0
STUDIES/PERMITTING - Construction Contractor	0.0	0.0	0.0	0.0	0.0	0.0
DESIGN - Site Management/Operations	0.7	0.0	0.0	0.0	0.0	0.0
DESIGN - Site Infrastructure	0.1	0.0	0.0	0.0	0.0	0.0
DESIGN - National Laboratories	0.6	0.0	0.0	0.0	0.0	0.0
DESIGN - Site Constructors	0.4	0.0	0.0	0.0	0.0	0.0
DESIGN - Architecture/Engineering Contractors	5.0	0.0	0.0	0.0	0.0	0.0
DESIGN - Construction Contractor	0.0	0.0	0.0	0.0	0.0	0.0
CONSTRUCTION/D&D - Site Management/Operations	0.0	0.0	0.0	0.0	0.0	0.0
CONSTRUCTION/D&D - Site Infrastructure	0.0	0.0	0.0	0.0	0.0	0.0
CONSTRUCTION/D&D - National Laboratories	0.0	0.0	0.0	0.0	0.0	0.0
CONSTRUCTION/D&D - Site Constructors	0.0	0.0	0.0	0.0	0.0	0.0
CONSTRUCTION/D&D - Architecture/Engineering Contractors	0.0	0.0	0.0	0.0	0.0	0.0
CONSTRUCTION/D&D - Construction Contractor	0.0	0.0	0.0	0.0	0.0	0.0
OPERATIONS - Site Management/Operations	64.4	23.6	15.1	50.1	211.6	135.1
OPERATIONS - Site Infrastructure	11.4	4.2	2.7	8.8	37.3	23.8
OPERATIONS - National Laboratories	25.9	9.5	6.1	20.1	85.0	54.3
OPERATIONS - Site Constructors	0.0	0.0	0.0	0.0	0.0	0.0
OPERATIONS - Architecture/Engineering Contractors	0.0	0.0	0.0	0.0	0.0	0.0
OPERATIONS - Construction Contractor	0.0	0.0	0.0	0.0	0.0	0.0

Worker Category Base FTE (FTE)	FY01	FY02	FY03	FY04	FY05	FY06
Engineer/Management	46.2	11.2	7.2	23.9	79.0	50.4
Crafts	0.0	0.0	0.0	0.0	0.0	0.0
Maintenance	27.1	9.9	6.4	21.1	89.0	56.8
Operators	45.1	16.5	10.6	35.1	148.3	94.7
Infrastructure	14.4	4.8	3.1	10.2	40.0	25.6
Total	132.8	42.5	27.2	90.2	356.3	227.5

FUNCTION - ALTERNATIVE 4 PRETREATMENT	FY07	FY08	FY09	FY10	FY11	FY12
Technology Development (Test) Cost	0	0	0	0	0	0
Operate LLW Pretreatment Mod 1 Facility First Year (Hot Test)	0	0	0	0	0	0
Operate LLW Pretreatment Mod 2 Facility First Year (Hot Test)	6,590,255	0	0	0	0	0
Prepare for Start Up In Tank Processing	0	0	0	0	0	0
Start-up In-Tank Processing	0	0	0	0	0	0
Start-up and Operate Pretreatment Pilot Testing	0	0	0	0	0	0
Continue Operation of Pilot Testing	0	0	0	0	0	0
Tank AZ-101 Sludge Test (PSW49XXX)	0	0	0	0	0	0
Prep LLW Pretreatment Mod 1 Facility For Start-up Phase 2 (Co	0	0	0	0	0	0
Prep LLW Pretreatment Mod 2 Facility For Start-up Phase 2 (Co	0	0	0	0	0	0
WESF Hot Cell Test (PDW211XX)	0	0	0	0	0	0
Operate HLW Pretreatment Facility - First Year (Hot Test)	0	965,396	0	0	0	0
Prepare HLW Pretreatment Facility for Start-up (Cold Test)	1,061,420	2,122,840	0	0	0	0
Subtotal Test Costs	7,651,675	3,088,236	0	0	0	0
Test Oversight Costs	765,168	308,824	0	0	0	0
Total Pretreatment Base Costs	8,416,843	3,397,060	0	0	0	0
Total Alt 4 Reddick Costs	10,000,000	10,000,000	0	0		
Pretreatment % of Total Alt 4 Reddick Costs	20	20	0	0		
Alt 4 Pretreatment Reddick Costs	2,000,000	2,000,000	0	0	0	0
Alt 4 Pretreatment Actual Costs ($)	10,416,843	5,397,060	0	0	0	0

ALTERNATIVE 4 PRETREATMENT BASE COST BREAKDOWN	FY07	FY08	FY09	FY10	FY11	FY12
Activity % of Alt 4 Pretreatment Base Costs (%)						
Studies/Permitting	5	5	0	0	0	0
Design	0	0	0	0	0	0
Construction/D&D	0	0	0	0	0	0
Operation	95	95	0	0	0	0
Total Percentage	100	100	0	0	0	0
Alt 4 Pretreatment Activity Base Costs($)						
Studies/Permitting	420,842	169,853	0	0	0	0
Design	0	0	0	0	0	0
Construction/D&D	0	0	0	0	0	0
Operation	7,996,000	3,227,207	0	0	0	0
Total Cost	8,416,843	3,397,060	0	0	0	0

ALTERNATIVE 4 PRETREATMENT BASE FTE BREAKDOWN	FY07	FY08	FY09	FY10	FY11	FY12
Contractor Base FTE per Alt 4 Pretreatment Activity (FTE)						
STUDIES/PERMITTING - Site Management/Operations	1.9	0.8	0.0	0.0	0.0	0.0
STUDIES/PERMITTING - Site Infrastructure	0.3	0.1	0.0	0.0	0.0	0.0
STUDIES/PERMITTING - National Laboratories	0.6	0.2	0.0	0.0	0.0	0.0
STUDIES/PERMITTING - Site Constructors	0.0	0.0	0.0	0.0	0.0	0.0
STUDIES/PERMITTING - Architecture/Engineering Contractors	0.0	0.0	0.0	0.0	0.0	0.0
STUDIES/PERMITTING - Construction Contractor	0.0	0.0	0.0	0.0	0.0	0.0
DESIGN - Site Management/Operations	0.0	0.0	0.0	0.0	0.0	0.0
DESIGN - Site Infrastructure	0.0	0.0	0.0	0.0	0.0	0.0
DESIGN - National Laboratories	0.0	0.0	0.0	0.0	0.0	0.0
DESIGN - Site Constructors	0.0	0.0	0.0	0.0	0.0	0.0
DESIGN - Architecture/Engineering Contractors	0.0	0.0	0.0	0.0	0.0	0.0
DESIGN - Construction Contractor	0.0	0.0	0.0	0.0	0.0	0.0
CONSTRUCTION/D&D - Site Management/Operations	0.0	0.0	0.0	0.0	0.0	0.0
CONSTRUCTION/D&D - Site Infrastructure	0.0	0.0	0.0	0.0	0.0	0.0
CONSTRUCTION/D&D - National Laboratories	0.0	0.0	0.0	0.0	0.0	0.0
CONSTRUCTION/D&D - Site Constructors	0.0	0.0	0.0	0.0	0.0	0.0
CONSTRUCTION/D&D - Architecture/Engineering Contractors	0.0	0.0	0.0	0.0	0.0	0.0
CONSTRUCTION/D&D - Construction Contractor	0.0	0.0	0.0	0.0	0.0	0.0
OPERATIONS - Site Management/Operations	26.7	10.8	0.0	0.0	0.0	0.0
OPERATIONS - Site Infrastructure	4.7	1.9	0.0	0.0	0.0	0.0
OPERATIONS - National Laboratories	10.7	4.3	0.0	0.0	0.0	0.0
OPERATIONS - Site Constructors	0.0	0.0	0.0	0.0	0.0	0.0
OPERATIONS - Architecture/Engineering Contractors	0.0	0.0	0.0	0.0	0.0	0.0
OPERATIONS - Construction Contractor	0.0	0.0	0.0	0.0	0.0	0.0

Worker Category Base FTE (FTE)	FY07	FY08	FY09	FY10	FY11	FY12
Engineer/Management	10.0	4.0	0.0	0.0	0.0	0.0
Crafts	0.0	0.0	0.0	0.0	0.0	0.0
Maintenance	11.2	4.5	0.0	0.0	0.0	0.0
Operators	18.7	7.6	0.0	0.0	0.0	0.0
Infrastructure	5.1	2.0	0.0	0.0	0.0	0.0
Total	45.0	18.1	0.0	0.0	0.0	0.0

FUNCTION - ALTERNATIVE 4 PRETREATMENT	FY13	FY14	FY15	FY16	FY17	FY18	FY19	FY20	FY21	FY22
Technology Development (Test) Cost	0	0	0	0	0	0	0	0	0	0
Operate LLW Pretreatment Mod 1 Facility First Year (Hot Test)	0	0	0	0	0	0	0	0	0	0
Operate LLW Pretreatment Mod 2 Facility First Year (Hot Test)	0	0	0	0	0	0	0	0	0	0
Prepare for Start Up In Tank Processing	0	0	0	0	0	0	0	0	0	0
Start-up In-Tank Processing	0	0	0	0	0	0	0	0	0	0
Start-up and Operate Pretreatment Pilot Testing	0	0	0	0	0	0	0	0	0	0
Continue Operation of Pilot Testing	0	0	0	0	0	0	0	0	0	0
Tank AZ-101 Sludge Test (PSW49XXX)	0	0	0	0	0	0	0	0	0	0
Prep LLW Pretreatment Mod 1 Facility For Start-up Phase 2 (Co	0	0	0	0	0	0	0	0	0	0
Prep LLW Pretreatment Mod 2 Facility For Start-up Phase 2 (Co	0	0	0	0	0	0	0	0	0	0
WESF Hot Cell Test (PDW211XX)	0	0	0	0	0	0	0	0	0	0
Operate HLW Pretreatment Facility - First Year (Hot Test)	0	0	0	0	0	0	0	0	0	0
Prepare HLW Pretreatment Facility for Start-up (Cold Test)	0	0	0	0	0	0	0	0	0	0
Subtotal Test Costs	0	0	0	0	0	0	0	0	0	0
Test Oversight Costs	0	0	0	0	0	0	0	0	0	0
Total Pretreatment Base Costs	0	0	0	0	0	0	0	0	0	0
Total Alt 4 Reddick Costs										
Pretreatment % of Total Alt 4 Reddick Costs										
Alt 4 Pretreatment Reddick Costs	0	0	0	0	0	0	0	0	0	0
Alt 4 Pretreatment Actual Costs ($)	0	0	0	0	0	0	0	0	0	0

ALTERNATIVE 4 PRETREATMENT BASE COST BREAKDOWN	FY13	FY14	FY15	FY16	FY17	FY18	FY19	FY20	FY21	FY22
Activity % of Alt 4 Pretreatment Base Costs (%)										
Studies/Permitting	0	0	0	0	0	0	0	0	0	0
Design	0	0	0	0	0	0	0	0	0	0
Construction/D&D	0	0	0	0	0	0	0	0	0	0
Operation	0	0	0	0	0	0	0	0	0	0
Total Percentage	0	0	0	0	0	0	0	0	0	0
Alt 4 Pretreatment Activity Base Costs($)										
Studies/Permitting	0	0	0	0	0	0	0	0	0	0
Design	0	0	0	0	0	0	0	0	0	0
Construction/D&D	0	0	0	0	0	0	0	0	0	0
Operation	0	0	0	0	0	0	0	0	0	0
Total Cost	0	0	0	0	0	0	0	0	0	0

ALTERNATIVE 4 PRETREATMENT BASE FTE BREAKDOWN	FY13	FY14	FY15	FY16	FY17	FY18	FY19	FY20	FY21	FY22
Contractor Base FTE per Alt 4 Pretreatment Activity (FTE)										
STUDIES/PERMITTING - Site Management/Operations	0.0	0.0	0.0	0.0	0.0	0.0	0.0	0.0	0.0	0.0
STUDIES/PERMITTING - Site Infrastructure	0.0	0.0	0.0	0.0	0.0	0.0	0.0	0.0	0.0	0.0
STUDIES/PERMITTING - National Laboratories	0.0	0.0	0.0	0.0	0.0	0.0	0.0	0.0	0.0	0.0
STUDIES/PERMITTING - Site Constructors	0.0	0.0	0.0	0.0	0.0	0.0	0.0	0.0	0.0	0.0
STUDIES/PERMITTING - Architecture/Engineering Contractors	0.0	0.0	0.0	0.0	0.0	0.0	0.0	0.0	0.0	0.0
STUDIES/PERMITTING - Construction Contractor	0.0	0.0	0.0	0.0	0.0	0.0	0.0	0.0	0.0	0.0
DESIGN - Site Management/Operations	0.0	0.0	0.0	0.0	0.0	0.0	0.0	0.0	0.0	0.0
DESIGN - Site Infrastructure	0.0	0.0	0.0	0.0	0.0	0.0	0.0	0.0	0.0	0.0
DESIGN - National Laboratories	0.0	0.0	0.0	0.0	0.0	0.0	0.0	0.0	0.0	0.0
DESIGN - Site Constructors	0.0	0.0	0.0	0.0	0.0	0.0	0.0	0.0	0.0	0.0
DESIGN - Architecture/Engineering Contractors	0.0	0.0	0.0	0.0	0.0	0.0	0.0	0.0	0.0	0.0
DESIGN - Construction Contractor	0.0	0.0	0.0	0.0	0.0	0.0	0.0	0.0	0.0	0.0
CONSTRUCTION/D&D - Site Management/Operations	0.0	0.0	0.0	0.0	0.0	0.0	0.0	0.0	0.0	0.0
CONSTRUCTION/D&D - Site Infrastructure	0.0	0.0	0.0	0.0	0.0	0.0	0.0	0.0	0.0	0.0
CONSTRUCTION/D&D - National Laboratories	0.0	0.0	0.0	0.0	0.0	0.0	0.0	0.0	0.0	0.0
CONSTRUCTION/D&D - Site Constructors	0.0	0.0	0.0	0.0	0.0	0.0	0.0	0.0	0.0	0.0
CONSTRUCTION/D&D - Architecture/Engineering Contractors	0.0	0.0	0.0	0.0	0.0	0.0	0.0	0.0	0.0	0.0
CONSTRUCTION/D&D - Construction Contractor	0.0	0.0	0.0	0.0	0.0	0.0	0.0	0.0	0.0	0.0
OPERATIONS - Site Management/Operations	0.0	0.0	0.0	0.0	0.0	0.0	0.0	0.0	0.0	0.0
OPERATIONS - Site Infrastructure	0.0	0.0	0.0	0.0	0.0	0.0	0.0	0.0	0.0	0.0
OPERATIONS - National Laboratories	0.0	0.0	0.0	0.0	0.0	0.0	0.0	0.0	0.0	0.0
OPERATIONS - Site Constructors	0.0	0.0	0.0	0.0	0.0	0.0	0.0	0.0	0.0	0.0
OPERATIONS - Architecture/Engineering Contractors	0.0	0.0	0.0	0.0	0.0	0.0	0.0	0.0	0.0	0.0
OPERATIONS - Construction Contractor	0.0	0.0	0.0	0.0	0.0	0.0	0.0	0.0	0.0	0.0

Worker Category Base FTE (FTE)	FY13	FY14	FY15	FY16	FY17	FY18	FY19	FY20	FY21	FY22
Engineer/Management	0.0	0.0	0.0	0.0	0.0	0.0	0.0	0.0	0.0	0.0
Crafts	0.0	0.0	0.0	0.0	0.0	0.0	0.0	0.0	0.0	0.0
Maintenance	0.0	0.0	0.0	0.0	0.0	0.0	0.0	0.0	0.0	0.0
Operators	0.0	0.0	0.0	0.0	0.0	0.0	0.0	0.0	0.0	0.0
Infrastructure	0.0	0.0	0.0	0.0	0.0	0.0	0.0	0.0	0.0	0.0
Total	0.0	0.0	0.0	0.0	0.0	0.0	0.0	0.0	0.0	0.0

FUNCTION - ALTERNATIVE 4 PRETREATMENT	FY23	FY24	FY25	FY26	FY27	FY28	FY29	FY30	FY31	FY32	FY33	FY34	FY35
Technology Development (Test) Cost	0	0	0	0	0	0	0	0	0	0	0	0	0
Operate LLW Pretreatment Mod 1 Facility First Year (Hot Test)	0	0	0	0	0	0	0	0	0	0	0	0	0
Operate LLW Pretreatment Mod 2 Facility First Year (Hot Test)	0	0	0	0	0	0	0	0	0	0	0	0	0
Prepare for Start Up In Tank Processing	0	0	0	0	0	0	0	0	0	0	0	0	0
Start-up In-Tank Processing	0	0	0	0	0	0	0	0	0	0	0	0	0
Start-up and Operate Pretreatment Pilot Testing	0	0	0	0	0	0	0	0	0	0	0	0	0
Continue Operation of Pilot Testing	0	0	0	0	0	0	0	0	0	0	0	0	0
Tank AZ-101 Sludge Test (PSW49XXX)	0	0	0	0	0	0	0	0	0	0	0	0	0
Prep LLW Pretreatment Mod 1 Facility For Start-up Phase 2 (Co	0	0	0	0	0	0	0	0	0	0	0	0	0
Prep LLW Pretreatment Mod 2 Facility For Start-up Phase 2 (Co	0	0	0	0	0	0	0	0	0	0	0	0	0
WESF Hot Cell Test (PDW211XX)	0	0	0	0	0	0	0	0	0	0	0	0	0
Operate HLW Pretreatment Facility - First Year (Hot Test)	0	0	0	0	0	0	0	0	0	0	0	0	0
Prepare HLW Pretreatment Facility for Start-up (Cold Test)	0	0	0	0	0	0	0	0	0	0	0	0	0
Subtotal Test Costs	0	0	0	0	0	0	0	0	0	0	0	0	0
Test Oversight Costs	0	0	0	0	0	0	0	0	0	0	0	0	0
Total Pretreatment Base Costs	0	0	0	0	0	0	0	0	0	0	0	0	0
Total Alt 4 Reddick Costs													
Pretreatment % of Total Alt 4 Reddick Costs													
Alt 4 Pretreatment Reddick Costs	0	0	0	0	0	0	0	0	0	0	0	0	0
Alt 4 Pretreatment Actual Costs ($)	0	0	0	0	0	0	0	0	0	0	0	0	0

ALTERNATIVE 4 PRETREATMENT BASE COST BREAKDOWN	FY23	FY24	FY25	FY26	FY27	FY28	FY29	FY30	FY31	FY32	FY33	FY34	FY35
Activity % of Alt 4 Pretreatment Base Costs (%)													
Studies/Permitting	0	0	0	0	0	0	0	0	0	0	0	0	0
Design	0	0	0	0	0	0	0	0	0	0	0	0	0
Construction/D&D	0	0	0	0	0	0	0	0	0	0	0	0	0
Operation	0	0	0	0	0	0	0	0	0	0	0	0	0
Total Percentage	0	0	0	0	0	0	0	0	0	0	0	0	0
Alt 4 Pretreatment Activity Base Costs($)													
Studies/Permitting	0	0	0	0	0	0	0	0	0	0	0	0	0
Design	0	0	0	0	0	0	0	0	0	0	0	0	0
Construction/D&D	0	0	0	0	0	0	0	0	0	0	0	0	0
Operation	0	0	0	0	0	0	0	0	0	0	0	0	0
Total Cost	0	0	0	0	0	0	0	0	0	0	0	0	0

ALTERNATIVE 4 PRETREATMENT BASE FTE BREAKDOWN	FY23	FY24	FY25	FY26	FY27	FY28	FY29	FY30	FY31	FY32	FY33	FY34	FY35
Contractor Base FTE per Alt 4 Pretreatment Activity (FTE)													
STUDIES/PERMITTING - Site Management/Operations	0.0	0.0	0.0	0.0	0.0	0.0	0.0	0.0	0.0	0.0	0.0	0.0	0.0
STUDIES/PERMITTING - Site Infrastructure	0.0	0.0	0.0	0.0	0.0	0.0	0.0	0.0	0.0	0.0	0.0	0.0	0.0
STUDIES/PERMITTING - National Laboratories	0.0	0.0	0.0	0.0	0.0	0.0	0.0	0.0	0.0	0.0	0.0	0.0	0.0
STUDIES/PERMITTING - Site Constructors	0.0	0.0	0.0	0.0	0.0	0.0	0.0	0.0	0.0	0.0	0.0	0.0	0.0
STUDIES/PERMITTING - Architecture/Engineering Contractors	0.0	0.0	0.0	0.0	0.0	0.0	0.0	0.0	0.0	0.0	0.0	0.0	0.0
STUDIES/PERMITTING - Construction Contractor	0.0	0.0	0.0	0.0	0.0	0.0	0.0	0.0	0.0	0.0	0.0	0.0	0.0
DESIGN - Site Management/Operations	0.0	0.0	0.0	0.0	0.0	0.0	0.0	0.0	0.0	0.0	0.0	0.0	0.0
DESIGN - Site Infrastructure	0.0	0.0	0.0	0.0	0.0	0.0	0.0	0.0	0.0	0.0	0.0	0.0	0.0
DESIGN - National Laboratories	0.0	0.0	0.0	0.0	0.0	0.0	0.0	0.0	0.0	0.0	0.0	0.0	0.0
DESIGN - Site Constructors	0.0	0.0	0.0	0.0	0.0	0.0	0.0	0.0	0.0	0.0	0.0	0.0	0.0
DESIGN - Architecture/Engineering Contractors	0.0	0.0	0.0	0.0	0.0	0.0	0.0	0.0	0.0	0.0	0.0	0.0	0.0
DESIGN - Construction Contractor	0.0	0.0	0.0	0.0	0.0	0.0	0.0	0.0	0.0	0.0	0.0	0.0	0.0
CONSTRUCTION/D&D - Site Management/Operations	0.0	0.0	0.0	0.0	0.0	0.0	0.0	0.0	0.0	0.0	0.0	0.0	0.0
CONSTRUCTION/D&D - Site Infrastructure	0.0	0.0	0.0	0.0	0.0	0.0	0.0	0.0	0.0	0.0	0.0	0.0	0.0
CONSTRUCTION/D&D - National Laboratories	0.0	0.0	0.0	0.0	0.0	0.0	0.0	0.0	0.0	0.0	0.0	0.0	0.0
CONSTRUCTION/D&D - Site Constructors	0.0	0.0	0.0	0.0	0.0	0.0	0.0	0.0	0.0	0.0	0.0	0.0	0.0
CONSTRUCTION/D&D - Architecture/Engineering Contractors	0.0	0.0	0.0	0.0	0.0	0.0	0.0	0.0	0.0	0.0	0.0	0.0	0.0
CONSTRUCTION/D&D - Construction Contractor	0.0	0.0	0.0	0.0	0.0	0.0	0.0	0.0	0.0	0.0	0.0	0.0	0.0
OPERATIONS - Site Management/Operations	0.0	0.0	0.0	0.0	0.0	0.0	0.0	0.0	0.0	0.0	0.0	0.0	0.0
OPERATIONS - Site Infrastructure	0.0	0.0	0.0	0.0	0.0	0.0	0.0	0.0	0.0	0.0	0.0	0.0	0.0
OPERATIONS - National Laboratories	0.0	0.0	0.0	0.0	0.0	0.0	0.0	0.0	0.0	0.0	0.0	0.0	0.0
OPERATIONS - Site Constructors	0.0	0.0	0.0	0.0	0.0	0.0	0.0	0.0	0.0	0.0	0.0	0.0	0.0
OPERATIONS - Architecture/Engineering Contractors	0.0	0.0	0.0	0.0	0.0	0.0	0.0	0.0	0.0	0.0	0.0	0.0	0.0
OPERATIONS - Construction Contractor	0.0	0.0	0.0	0.0	0.0	0.0	0.0	0.0	0.0	0.0	0.0	0.0	0.0

Worker Category Base FTE (FTE)	FY23	FY24	FY25	FY26	FY27	FY28	FY29	FY30	FY31	FY32	FY33	FY34	FY35
Engineer/Management	0.0	0.0	0.0	0.0	0.0	0.0	0.0	0.0	0.0	0.0	0.0	0.0	0.0
Crafts	0.0	0.0	0.0	0.0	0.0	0.0	0.0	0.0	0.0	0.0	0.0	0.0	0.0
Maintenance	0.0	0.0	0.0	0.0	0.0	0.0	0.0	0.0	0.0	0.0	0.0	0.0	0.0
Operators	0.0	0.0	0.0	0.0	0.0	0.0	0.0	0.0	0.0	0.0	0.0	0.0	0.0
Infrastructure	0.0	0.0	0.0	0.0	0.0	0.0	0.0	0.0	0.0	0.0	0.0	0.0	0.0
Total	0.0	0.0	0.0	0.0	0.0	0.0	0.0	0.0	0.0	0.0	0.0	0.0	0.0

FUNCTION - ALTERNATIVE 4 PRETREATMENT	FY36	FY37	FY38	FY39	FY40	Totals
Technology Development (Test) Cost	0	0	0	0	0	83,418,029
Operate LLW Pretreatment Mod 1 Facility First Year (Hot Test)	0	0	0	0	0	51,315,328
Operate LLW Pretreatment Mod 2 Facility First Year (Hot Test)	0	0	0	0	0	27,009,241
Prepare for Start Up In Tank Processing	0	0	0	0	0	14,893,112
Start-up In-Tank Processing	0	0	0	0	0	24,439,379
Start-up and Operate Pretreatment Pilot Testing	0	0	0	0	0	26,403,681
Continue Operation of Pilot Testing	0	0	0	0	0	26,384,980
Tank AZ-101 Sludge Test (PSW49XXX)	0	0	0	0	0	
Prep LLW Pretreatment Mod 1 Facility For Start-up Phase 2 (Co	0	0	0	0	0	
Prep LLW Pretreatment Mod 2 Facility For Start-up Phase 2 (Co	0	0	0	0	0	
WESF Hot Cell Test (PDW211XX)	0	0	0	0	0	
Operate HLW Pretreatment Facility - First Year (Hot Test)	0	0	0	0	0	
Prepare HLW Pretreatment Facility for Start-up (Cold Test)	0	0	0	0	0	
Subtotal Test Costs	0	0	0	0	0	348,214,791
Test Oversight Costs	0	0	0	0	0	34,821,479
Total Pretreatment Base Costs	0	0	0	0	0	383,036,270
Total Alt 4 Reddick Costs						199,000,000
Pretreatment % of Total Alt 4 Reddick Costs						280
Alt 4 Pretreatment Reddick Costs	0	0	0	0	0	39,800,000
Alt 4 Pretreatment Actual Costs ($)	0	0	0	0	0	422,836,270

ALTERNATIVE 4 PRETREATMENT BASE COST BREAKDOWN	FY36	FY37	FY38	FY39	FY40	
Activity % of Alt 4 Pretreatment Base Costs (%)						
Studies/Permitting	0	0	0	0	0	
Design	0	0	0	0	0	
Construction/D&D	0	0	0	0	0	
Operation	0	0	0	0	0	
Total Percentage	0	0	0	0	0	
Alt 4 Pretreatment Activity Base Costs($)						Totals
Studies/Permitting	0	0	0	0	0	45,916,897
Design	0	0	0	0	0	11,618,715
Construction/D&D	0	0	0	0	0	32,663,317
Operation	0	0	0	0	0	292,837,342
Total Cost	0	0	0	0	0	383,036,270

ALTERNATIVE 4 PRETREATMENT BASE FTE BREAKDOWN	FY36	FY37	FY38	FY39	FY40	Totals
Contractor Base FTE per Alt 4 Pretreatment Activity (FTE)						
STUDIES/PERMITTING - Site Management/Operations	0.0	0.0	0.0	0.0	0.0	209.1
STUDIES/PERMITTING - Site Infrastructure	0.0	0.0	0.0	0.0	0.0	36.9
STUDIES/PERMITTING - National Laboratories	0.0	0.0	0.0	0.0	0.0	61.6
STUDIES/PERMITTING - Site Constructors	0.0	0.0	0.0	0.0	0.0	0.0
STUDIES/PERMITTING - Architecture/Engineering Contractors	0.0	0.0	0.0	0.0	0.0	0.0
STUDIES/PERMITTING - Construction Contractor	0.0	0.0	0.0	0.0	0.0	0.0
DESIGN - Site Management/Operations	0.0	0.0	0.0	0.0	0.0	7.1
DESIGN - Site Infrastructure	0.0	0.0	0.0	0.0	0.0	1.2
DESIGN - National Laboratories	0.0	0.0	0.0	0.0	0.0	6.2
DESIGN - Site Constructors	0.0	0.0	0.0	0.0	0.0	4.1
DESIGN - Architecture/Engineering Contractors	0.0	0.0	0.0	0.0	0.0	48.4
DESIGN - Construction Contractor	0.0	0.0	0.0	0.0	0.0	0.0
CONSTRUCTION/D&D - Site Management/Operations	0.0	0.0	0.0	0.0	0.0	9.9
CONSTRUCTION/D&D - Site Infrastructure	0.0	0.0	0.0	0.0	0.0	1.7
CONSTRUCTION/D&D - National Laboratories	0.0	0.0	0.0	0.0	0.0	8.8
CONSTRUCTION/D&D - Site Constructors	0.0	0.0	0.0	0.0	0.0	11.7
CONSTRUCTION/D&D - Architecture/Engineering Contractors	0.0	0.0	0.0	0.0	0.0	9.1
CONSTRUCTION/D&D - Construction Contractor	0.0	0.0	0.0	0.0	0.0	192.1
OPERATIONS - Site Management/Operations	0.0	0.0	0.0	0.0	0.0	977.9
OPERATIONS - Site Infrastructure	0.0	0.0	0.0	0.0	0.0	172.6
OPERATIONS - National Laboratories	0.0	0.0	0.0	0.0	0.0	392.9
OPERATIONS - Site Constructors	0.0	0.0	0.0	0.0	0.0	0.0
OPERATIONS - Architecture/Engineering Contractors	0.0	0.0	0.0	0.0	0.0	0.0
OPERATIONS - Construction Contractor	0.0	0.0	0.0	0.0	0.0	0.0

Worker Category Base FTE (FTE)	FY36	FY37	FY38	FY39	FY40	Totals
Engineer/Management	0.0	0.0	0.0	0.0	0.0	686.2
Crafts	0.0	0.0	0.0	0.0	0.0	156.0
Maintenance	0.0	0.0	0.0	0.0	0.0	411.2
Operators	0.0	0.0	0.0	0.0	0.0	685.4
Infrastructure	0.0	0.0	0.0	0.0	0.0	212.5
Total	0.0	0.0	0.0	0.0	0.0	2,151.3

ALTERNATIVE 4 PRETREATMENT REDDICK COST BREAKDOWN	FY95	FY96	FY97	FY98	FY99	FY00
Activity % of Alt 4 Pretreatment Reddick Costs (%)						
Studies/Permitting	100	100	100	0	0	0
Design	0	0	0	100	100	100
Construction/D&D	0	0	0	0	0	0
Operation	0	0	0	0	0	0
Total Percentage	100	100	100	100	100	100
Alt 4 Pretreatment Activity Reddick Costs($)						
Studies/Permitting	200,000	200,000	600,000	0	0	0
Design	0	0	0	1,000,000	2,400,000	2,400,000
Construction/D&D	0	0	0	0	0	0
Operation	0	0	0	0	0	0
Total Cost	200,000	200,000	600,000	1,000,000	2,400,000	2,400,000

ALTERNATIVE 4 PRETREATMENT REDDICK FTE BREAKDOWN	FY95	FY96	FY97	FY98	FY99	FY00
Contractor Reddick FTE per Alt 4 Pretreatment Activity (FTE)						
STUDIES/PERMITTING - Site Management/Operations	1.2	1.2	3.5	0.0	0.0	0.0
STUDIES/PERMITTING - Site Infrastructure	0.2	0.2	0.6	0.0	0.0	0.0
STUDIES/PERMITTING - National Laboratories	0.1	0.1	0.2	0.0	0.0	0.0
STUDIES/PERMITTING - Site Constructors	0.0	0.0	0.0	0.0	0.0	0.0
STUDIES/PERMITTING - Architecture/Engineering Contract	0.0	0.0	0.0	0.0	0.0	0.0
STUDIES/PERMITTING - Construction Contractor	0.0	0.0	0.0	0.0	0.0	0.0
DESIGN - Site Management/Operations	0.0	0.0	0.0	0.6	1.5	1.5
DESIGN - Site Infrastructure	0.0	0.0	0.0	0.1	0.3	0.3
DESIGN - National Laboratories	0.0	0.0	0.0	0.5	1.3	1.3
DESIGN - Site Constructors	0.0	0.0	0.0	0.4	0.9	0.9
DESIGN - Architecture/Engineering Contractors	0.0	0.0	0.0	4.2	10.0	10.0
DESIGN - Construction Contractor	0.0	0.0	0.0	0.0	0.0	0.0
CONSTRUCTION/D&D - Site Management/Operations	0.0	0.0	0.0	0.0	0.0	0.0
CONSTRUCTION/D&D - Site Infrastructure	0.0	0.0	0.0	0.0	0.0	0.0
CONSTRUCTION/D&D - National Laboratories	0.0	0.0	0.0	0.0	0.0	0.0
CONSTRUCTION/D&D - Site Constructors	0.0	0.0	0.0	0.0	0.0	0.0
CONSTRUCTION/D&D - Architecture/Engineering Contracto	0.0	0.0	0.0	0.0	0.0	0.0
CONSTRUCTION/D&D - Construction Contractor	0.0	0.0	0.0	0.0	0.0	0.0
OPERATIONS - Site Management/Operations	0.0	0.0	0.0	0.0	0.0	0.0
OPERATIONS - Site Infrastructure	0.0	0.0	0.0	0.0	0.0	0.0
OPERATIONS - National Laboratories	0.0	0.0	0.0	0.0	0.0	0.0
OPERATIONS - Site Constructors	0.0	0.0	0.0	0.0	0.0	0.0
OPERATIONS - Architecture/Engineering Contractors	0.0	0.0	0.0	0.0	0.0	0.0
OPERATIONS - Construction Contractor	0.0	0.0	0.0	0.0	0.0	0.0
Worker Category Reddick FTE (FTE)						
Engineer/Management	1.2	1.2	3.6	5.7	13.6	13.6
Crafts	0.0	0.0	0.0	0.0	0.0	0.0
Maintenance	0.0	0.0	0.0	0.0	0.0	0.0
Operators	0.0	0.0	0.0	0.0	0.0	0.0
Infrastructure	0.2	0.2	0.6	0.1	0.3	0.3
Total	1.4	1.4	4.2	5.8	13.9	13.9

ALTERNATIVE 4 PRETREATMENT COST SUMMARY	FY95	FY96	FY97	FY98	FY99	FY00
Studies/Permitting	6,930,034	6,399,321	7,110,822	5,619,315	4,681,289	3,570,054
Design	1,682,508	1,549,830	1,627,705	3,809,657	3,953,763	3,590,018
Construction/D&D	8,412,542	7,749,152	8,138,527	5,619,315	1,553,763	1,190,018
Operation	16,825,084	15,498,304	16,277,054	42,144,859	23,306,446	17,850,269
Total	33,850,168	31,196,607	33,154,108	57,193,146	33,475,261	26,200,359

ALTERNATIVE 4 PRETREATMENT FTE SUMMARY	FY95	FY96	FY97	FY98	FY99	FY00
Engineer/Management	85.6	79.0	85.3	107.2	75.3	60.9
Crafts	40.2	37.0	38.9	26.8	7.4	5.7
Maintenance	23.6	21.8	22.9	59.2	32.7	25.1
Operators	39.4	36.3	38.1	98.6	54.5	41.8
Infrastructure	16.2	14.9	16.0	30.1	18.0	13.8
Total	205.0	188.9	201.2	321.9	188.0	147.2

ALTERNATIVE 4 PRETREATMENT REDDICK COST BREAKDOWN	FY01	FY02	FY03	FY04	FY05	FY06
Activity % of Alt 4 Pretreatment Reddick Costs (%)						
Studies/Permitting	0	0	0	0	0	0
Design	0	0	0	0	0	0
Construction/D&D	100	100	100	0	0	0
Operation	0	0	0	100	100	100
Total Percentage	100	100	100	100	100	100
Alt 4 Pretreatment Activity Reddick Costs($)						
Studies/Permitting	0	0	0	0	0	0
Design	0	0	0	0	0	0
Construction/D&D	6,000,000	8,000,000	9,000,000	0	0	0
Operation	0	0	0	2,000,000	2,000,000	2,000,000
Total Cost	6,000,000	8,000,000	9,000,000	2,000,000	2,000,000	2,000,000

ALTERNATIVE 4 PRETREATMENT REDDICK FTE BREAKDOWN	FY01	FY02	FY03	FY04	FY05	FY06
Contractor Reddick FTE per Alt 4 Pretreatment Activity (FTE)						
STUDIES/PERMITTING - Site Management/Operations	0.0	0.0	0.0	0.0	0.0	0.0
STUDIES/PERMITTING - Site Infrastructure	0.0	0.0	0.0	0.0	0.0	0.0
STUDIES/PERMITTING - National Laboratories	0.0	0.0	0.0	0.0	0.0	0.0
STUDIES/PERMITTING - Site Constructors	0.0	0.0	0.0	0.0	0.0	0.0
STUDIES/PERMITTING - Architecture/Engineering Contract	0.0	0.0	0.0	0.0	0.0	0.0
STUDIES/PERMITTING - Construction Contractor	0.0	0.0	0.0	0.0	0.0	0.0
DESIGN - Site Management/Operations	0.0	0.0	0.0	0.0	0.0	0.0
DESIGN - Site Infrastructure	0.0	0.0	0.0	0.0	0.0	0.0
DESIGN - National Laboratories	0.0	0.0	0.0	0.0	0.0	0.0
DESIGN - Site Constructors	0.0	0.0	0.0	0.0	0.0	0.0
DESIGN - Architecture/Engineering Contractors	0.0	0.0	0.0	0.0	0.0	0.0
DESIGN - Construction Contractor	0.0	0.0	0.0	0.0	0.0	0.0
CONSTRUCTION/D&D - Site Management/Operations	3.6	4.9	5.5	0.0	0.0	0.0
CONSTRUCTION/D&D - Site Infrastructure	0.6	0.9	1.0	0.0	0.0	0.0
CONSTRUCTION/D&D - National Laboratories	0.0	0.0	0.0	0.0	0.0	0.0
CONSTRUCTION/D&D - Site Constructors	2.1	2.9	3.2	0.0	0.0	0.0
CONSTRUCTION/D&D - Architecture/Engineering Contracto	1.7	2.2	2.5	0.0	0.0	0.0
CONSTRUCTION/D&D - Construction Contractor	35.3	47.1	52.9	0.0	0.0	0.0
OPERATIONS - Site Management/Operations	0.0	0.0	0.0	8.5	8.5	8.5
OPERATIONS - Site Infrastructure	0.0	0.0	0.0	1.5	1.5	1.5
OPERATIONS - National Laboratories	0.0	0.0	0.0	1.1	1.1	1.1
OPERATIONS - Site Constructors	0.0	0.0	0.0	0.0	0.0	0.0
OPERATIONS - Architecture/Engineering Contractors	0.0	0.0	0.0	0.0	0.0	0.0
OPERATIONS - Construction Contractor	0.0	0.0	0.0	0.0	0.0	0.0
Worker Category Reddick FTE (FTE)						
Engineer/Management	14.1	18.8	21.1	1.9	1.9	1.9
Crafts	28.7	38.2	43.0	0.0	0.0	0.0
Maintenance	0.0	0.0	0.0	2.9	2.9	2.9
Operators	0.0	0.0	0.0	4.8	4.8	4.8
Infrastructure	0.6	0.9	1.0	1.5	1.5	1.5
Total	43.4	57.9	65.1	11.1	11.1	11.1

ALTERNATIVE 4 PRETREATMENT COST SUMMARY	FY01	FY02	FY03	FY04	FY05	FY06
Studies/Permitting	3,615,697	784,498	503,384	1,666,652	3,335,628	2,129,508
Design	1,205,232	0	0	0	0	0
Construction/D&D	6,000,000	8,000,000	9,000,000	0	0	0
Operation	19,283,716	7,060,478	4,530,459	16,999,867	65,376,940	42,460,659
Total	30,104,645	15,844,976	14,033,843	18,666,519	68,712,568	44,590,167

ALTERNATIVE 4 PRETREATMENT FTE SUMMARY	FY01	FY02	FY03	FY04	FY05	FY06
Engineer/Management	60.3	30.0	28.3	25.8	80.9	52.3
Crafts	28.7	38.2	43.0	0.0	0.0	0.0
Maintenance	27.1	9.9	6.4	23.9	91.9	59.7
Operators	45.1	16.5	10.6	39.9	153.1	99.5
Infrastructure	15.0	5.6	4.0	11.7	41.5	27.1
Total	176.2	100.3	92.3	101.3	367.4	238.6

ALTERNATIVE 4 PRETREATMENT REDDICK COST BREAKDOWN	FY07	FY08	FY09	FY10	FY11	FY12
Activity % of Alt 4 Pretreatment Reddick Costs (%)						
Studies/Permitting	0	0	0	0	0	0
Design	0	0	0	0	0	0
Construction/D&D	0	0	0	0	0	0
Operation	100	100	0	0	0	0
Total Percentage	100	100	0	0	0	0
Alt 4 Pretreatment Activity Reddick Costs($)						
Studies/Permitting	0	0	0	0	0	0
Design	0	0	0	0	0	0
Construction/D&D	0	0	0	0	0	0
Operation	2,000,000	2,000,000	0	0	0	0
Total Cost	2,000,000	2,000,000	0	0	0	0

ALTERNATIVE 4 PRETREATMENT REDDICK FTE BREAKDOWN	FY07	FY08	FY09	FY10	FY11	FY12
Contractor Reddick FTE per Alt 4 Pretreatment Activity (FTE)						
STUDIES/PERMITTING - Site Management/Operations	0.0	0.0	0.0	0.0	0.0	0.0
STUDIES/PERMITTING - Site Infrastructure	0.0	0.0	0.0	0.0	0.0	0.0
STUDIES/PERMITTING - National Laboratories	0.0	0.0	0.0	0.0	0.0	0.0
STUDIES/PERMITTING - Site Constructors	0.0	0.0	0.0	0.0	0.0	0.0
STUDIES/PERMITTING - Architecture/Engineering Contract	0.0	0.0	0.0	0.0	0.0	0.0
STUDIES/PERMITTING - Construction Contractor	0.0	0.0	0.0	0.0	0.0	0.0
DESIGN - Site Management/Operations	0.0	0.0	0.0	0.0	0.0	0.0
DESIGN - Site Infrastructure	0.0	0.0	0.0	0.0	0.0	0.0
DESIGN - National Laboratories	0.0	0.0	0.0	0.0	0.0	0.0
DESIGN - Site Constructors	0.0	0.0	0.0	0.0	0.0	0.0
DESIGN - Architecture/Engineering Contractors	0.0	0.0	0.0	0.0	0.0	0.0
DESIGN - Construction Contractor	0.0	0.0	0.0	0.0	0.0	0.0
CONSTRUCTION/D&D - Site Management/Operations	0.0	0.0	0.0	0.0	0.0	0.0
CONSTRUCTION/D&D - Site Infrastructure	0.0	0.0	0.0	0.0	0.0	0.0
CONSTRUCTION/D&D - National Laboratories	0.0	0.0	0.0	0.0	0.0	0.0
CONSTRUCTION/D&D - Site Constructors	0.0	0.0	0.0	0.0	0.0	0.0
CONSTRUCTION/D&D - Architecture/Engineering Contracto	0.0	0.0	0.0	0.0	0.0	0.0
CONSTRUCTION/D&D - Construction Contractor	0.0	0.0	0.0	0.0	0.0	0.0
OPERATIONS - Site Management/Operations	8.5	8.5	0.0	0.0	0.0	0.0
OPERATIONS - Site Infrastructure	1.5	1.5	0.0	0.0	0.0	0.0
OPERATIONS - National Laboratories	1.1	1.1	0.0	0.0	0.0	0.0
OPERATIONS - Site Constructors	0.0	0.0	0.0	0.0	0.0	0.0
OPERATIONS - Architecture/Engineering Contractors	0.0	0.0	0.0	0.0	0.0	0.0
OPERATIONS - Construction Contractor	0.0	0.0	0.0	0.0	0.0	0.0
Worker Category Reddick FTE (FTE)						
Engineer/Management	1.9	1.9	0.0	0.0	0.0	0.0
Crafts	0.0	0.0	0.0	0.0	0.0	0.0
Maintenance	2.9	2.9	0.0	0.0	0.0	0.0
Operators	4.8	4.8	0.0	0.0	0.0	0.0
Infrastructure	1.5	1.5	0.0	0.0	0.0	0.0
Total	11.1	11.1	0.0	0.0	0.0	0.0

ALTERNATIVE 4 PRETREATMENT COST SUMMARY	FY07	FY08	FY09	FY10	FY11	FY12
Studies/Permitting	420,842	169,853	0	0	0	0
Design	0	0	0	0	0	0
Construction/D&D	0	0	0	0	0	0
Operation	9,996,000	5,227,207	0	0	0	0
Total	10,416,843	5,397,060	0	0	0	0

ALTERNATIVE 4 PRETREATMENT FTE SUMMARY	FY07	FY08	FY09	FY10	FY11	FY12
Engineer/Management	11.9	5.9	0.0	0.0	0.0	0.0
Crafts	0.0	0.0	0.0	0.0	0.0	0.0
Maintenance	14.1	7.4	0.0	0.0	0.0	0.0
Operators	23.5	12.3	0.0	0.0	0.0	0.0
Infrastructure	6.6	3.5	0.0	0.0	0.0	0.0
Total	56.0	29.2	0.0	0.0	0.0	0.0

ALTERNATIVE 4 PRETREATMENT REDDICK COST BREAKDOWN	FY13	FY14	FY15	FY16	FY17	FY18	FY19	FY20	FY21
Activity % of Alt 4 Pretreatment Reddick Costs (%)									
Studies/Permitting	0	0	0	0	0	0	0	0	0
Design	0	0	0	0	0	0	0	0	0
Construction/D&D	0	0	0	0	0	0	0	0	0
Operation	0	0	0	0	0	0	0	0	0
Total Percentage	0	0	0	0	0	0	0	0	0
Alt 4 Pretreatment Activity Reddick Costs($)									
Studies/Permitting	0	0	0	0	0	0	0	0	0
Design	0	0	0	0	0	0	0	0	0
Construction/D&D	0	0	0	0	0	0	0	0	0
Operation	0	0	0	0	0	0	0	0	0
Total Cost	0	0	0	0	0	0	0	0	0

ALTERNATIVE 4 PRETREATMENT REDDICK FTE BREAKDOWN	FY13	FY14	FY15	FY16	FY17	FY18	FY19	FY20	FY21
Contractor Reddick FTE per Alt 4 Pretreatment Activity (FTE)									
STUDIES/PERMITTING - Site Management/Operations	0.0	0.0	0.0	0.0	0.0	0.0	0.0	0.0	0.0
STUDIES/PERMITTING - Site Infrastructure	0.0	0.0	0.0	0.0	0.0	0.0	0.0	0.0	0.0
STUDIES/PERMITTING - National Laboratories	0.0	0.0	0.0	0.0	0.0	0.0	0.0	0.0	0.0
STUDIES/PERMITTING - Site Constructors	0.0	0.0	0.0	0.0	0.0	0.0	0.0	0.0	0.0
STUDIES/PERMITTING - Architecture/Engineering Contract	0.0	0.0	0.0	0.0	0.0	0.0	0.0	0.0	0.0
STUDIES/PERMITTING - Construction Contractor	0.0	0.0	0.0	0.0	0.0	0.0	0.0	0.0	0.0
DESIGN - Site Management/Operations	0.0	0.0	0.0	0.0	0.0	0.0	0.0	0.0	0.0
DESIGN - Site Infrastructure	0.0	0.0	0.0	0.0	0.0	0.0	0.0	0.0	0.0
DESIGN - National Laboratories	0.0	0.0	0.0	0.0	0.0	0.0	0.0	0.0	0.0
DESIGN - Site Constructors	0.0	0.0	0.0	0.0	0.0	0.0	0.0	0.0	0.0
DESIGN - Architecture/Engineering Contractors	0.0	0.0	0.0	0.0	0.0	0.0	0.0	0.0	0.0
DESIGN - Construction Contractor	0.0	0.0	0.0	0.0	0.0	0.0	0.0	0.0	0.0
CONSTRUCTION/D&D - Site Management/Operations	0.0	0.0	0.0	0.0	0.0	0.0	0.0	0.0	0.0
CONSTRUCTION/D&D - Site Infrastructure	0.0	0.0	0.0	0.0	0.0	0.0	0.0	0.0	0.0
CONSTRUCTION/D&D - National Laboratories	0.0	0.0	0.0	0.0	0.0	0.0	0.0	0.0	0.0
CONSTRUCTION/D&D - Site Constructors	0.0	0.0	0.0	0.0	0.0	0.0	0.0	0.0	0.0
CONSTRUCTION/D&D - Architecture/Engineering Contracto	0.0	0.0	0.0	0.0	0.0	0.0	0.0	0.0	0.0
CONSTRUCTION/D&D - Construction Contractor	0.0	0.0	0.0	0.0	0.0	0.0	0.0	0.0	0.0
OPERATIONS - Site Management/Operations	0.0	0.0	0.0	0.0	0.0	0.0	0.0	0.0	0.0
OPERATIONS - Site Infrastructure	0.0	0.0	0.0	0.0	0.0	0.0	0.0	0.0	0.0
OPERATIONS - National Laboratories	0.0	0.0	0.0	0.0	0.0	0.0	0.0	0.0	0.0
OPERATIONS - Site Constructors	0.0	0.0	0.0	0.0	0.0	0.0	0.0	0.0	0.0
OPERATIONS - Architecture/Engineering Contractors	0.0	0.0	0.0	0.0	0.0	0.0	0.0	0.0	0.0
OPERATIONS - Construction Contractor	0.0	0.0	0.0	0.0	0.0	0.0	0.0	0.0	0.0
Worker Category Reddick FTE (FTE)									
Engineer/Management	0.0	0.0	0.0	0.0	0.0	0.0	0.0	0.0	0.0
Crafts	0.0	0.0	0.0	0.0	0.0	0.0	0.0	0.0	0.0
Maintenance	0.0	0.0	0.0	0.0	0.0	0.0	0.0	0.0	0.0
Operators	0.0	0.0	0.0	0.0	0.0	0.0	0.0	0.0	0.0
Infrastructure	0.0	0.0	0.0	0.0	0.0	0.0	0.0	0.0	0.0
Total	0.0	0.0	0.0	0.0	0.0	0.0	0.0	0.0	0.0

ALTERNATIVE 4 PRETREATMENT COST SUMMARY	FY13	FY14	FY15	FY16	FY17	FY18	FY19	FY20	FY21
Studies/Permitting	0	0	0	0	0	0	0	0	0
Design	0	0	0	0	0	0	0	0	0
Construction/D&D	0	0	0	0	0	0	0	0	0
Operation	0	0	0	0	0	0	0	0	0
Total	0	0	0	0	0	0	0	0	0

ALTERNATIVE 4 PRETREATMENT FTE SUMMARY	FY13	FY14	FY15	FY16	FY17	FY18	FY19	FY20	FY21
Engineer/Management	0.0	0.0	0.0	0.0	0.0	0.0	0.0	0.0	0.0
Crafts	0.0	0.0	0.0	0.0	0.0	0.0	0.0	0.0	0.0
Maintenance	0.0	0.0	0.0	0.0	0.0	0.0	0.0	0.0	0.0
Operators	0.0	0.0	0.0	0.0	0.0	0.0	0.0	0.0	0.0
Infrastructure	0.0	0.0	0.0	0.0	0.0	0.0	0.0	0.0	0.0
Total	0.0	0.0	0.0	0.0	0.0	0.0	0.0	0.0	0.0

ALTERNATIVE 4 PRETREATMENT REDDICK COST BREAKDOWN	FY22	FY23	FY24	FY25	FY26	FY27	FY28	FY29	FY30	FY31	FY32
Activity % of Alt 4 Pretreatment Reddick Costs (%)											
Studies/Permitting	0	0	0	0	0	0	0	0	0	0	0
Design	0	0	0	0	0	0	0	0	0	0	0
Construction/D&D	0	0	0	0	0	0	0	0	0	0	0
Operation	0	0	0	0	0	0	0	0	0	0	0
Total Percentage	0	0	0	0	0	0	0	0	0	0	0
Alt 4 Pretreatment Activity Reddick Costs($)											
Studies/Permitting	0	0	0	0	0	0	0	0	0	0	0
Design	0	0	0	0	0	0	0	0	0	0	0
Construction/D&D	0	0	0	0	0	0	0	0	0	0	0
Operation	0	0	0	0	0	0	0	0	0	0	0
Total Cost	0	0	0	0	0	0	0	0	0	0	0

ALTERNATIVE 4 PRETREATMENT REDDICK FTE BREAKDOWN	FY22	FY23	FY24	FY25	FY26	FY27	FY28	FY29	FY30	FY31	FY32
Contractor Reddick FTE per Alt 4 Pretreatment Activity (FTE)											
STUDIES/PERMITTING - Site Management/Operations	0.0	0.0	0.0	0.0	0.0	0.0	0.0	0.0	0.0	0.0	0.0
STUDIES/PERMITTING - Site Infrastructure	0.0	0.0	0.0	0.0	0.0	0.0	0.0	0.0	0.0	0.0	0.0
STUDIES/PERMITTING - National Laboratories	0.0	0.0	0.0	0.0	0.0	0.0	0.0	0.0	0.0	0.0	0.0
STUDIES/PERMITTING - Site Constructors	0.0	0.0	0.0	0.0	0.0	0.0	0.0	0.0	0.0	0.0	0.0
STUDIES/PERMITTING - Architecture/Engineering Contract	0.0	0.0	0.0	0.0	0.0	0.0	0.0	0.0	0.0	0.0	0.0
STUDIES/PERMITTING - Construction Contractor	0.0	0.0	0.0	0.0	0.0	0.0	0.0	0.0	0.0	0.0	0.0
DESIGN - Site Management/Operations	0.0	0.0	0.0	0.0	0.0	0.0	0.0	0.0	0.0	0.0	0.0
DESIGN - Site Infrastructure	0.0	0.0	0.0	0.0	0.0	0.0	0.0	0.0	0.0	0.0	0.0
DESIGN - National Laboratories	0.0	0.0	0.0	0.0	0.0	0.0	0.0	0.0	0.0	0.0	0.0
DESIGN - Site Constructors	0.0	0.0	0.0	0.0	0.0	0.0	0.0	0.0	0.0	0.0	0.0
DESIGN - Architecture/Engineering Contractors	0.0	0.0	0.0	0.0	0.0	0.0	0.0	0.0	0.0	0.0	0.0
DESIGN - Construction Contractor	0.0	0.0	0.0	0.0	0.0	0.0	0.0	0.0	0.0	0.0	0.0
CONSTRUCTION/D&D - Site Management/Operations	0.0	0.0	0.0	0.0	0.0	0.0	0.0	0.0	0.0	0.0	0.0
CONSTRUCTION/D&D - Site Infrastructure	0.0	0.0	0.0	0.0	0.0	0.0	0.0	0.0	0.0	0.0	0.0
CONSTRUCTION/D&D - National Laboratories	0.0	0.0	0.0	0.0	0.0	0.0	0.0	0.0	0.0	0.0	0.0
CONSTRUCTION/D&D - Site Constructors	0.0	0.0	0.0	0.0	0.0	0.0	0.0	0.0	0.0	0.0	0.0
CONSTRUCTION/D&D - Architecture/Engineering Contracto	0.0	0.0	0.0	0.0	0.0	0.0	0.0	0.0	0.0	0.0	0.0
CONSTRUCTION/D&D - Construction Contractor	0.0	0.0	0.0	0.0	0.0	0.0	0.0	0.0	0.0	0.0	0.0
OPERATIONS - Site Management/Operations	0.0	0.0	0.0	0.0	0.0	0.0	0.0	0.0	0.0	0.0	0.0
OPERATIONS - Site Infrastructure	0.0	0.0	0.0	0.0	0.0	0.0	0.0	0.0	0.0	0.0	0.0
OPERATIONS - National Laboratories	0.0	0.0	0.0	0.0	0.0	0.0	0.0	0.0	0.0	0.0	0.0
OPERATIONS - Site Constructors	0.0	0.0	0.0	0.0	0.0	0.0	0.0	0.0	0.0	0.0	0.0
OPERATIONS - Architecture/Engineering Contractors	0.0	0.0	0.0	0.0	0.0	0.0	0.0	0.0	0.0	0.0	0.0
OPERATIONS - Construction Contractor	0.0	0.0	0.0	0.0	0.0	0.0	0.0	0.0	0.0	0.0	0.0
Worker Category Reddick FTE (FTE)											
Engineer/Management	0.0	0.0	0.0	0.0	0.0	0.0	0.0	0.0	0.0	0.0	0.0
Crafts	0.0	0.0	0.0	0.0	0.0	0.0	0.0	0.0	0.0	0.0	0.0
Maintenance	0.0	0.0	0.0	0.0	0.0	0.0	0.0	0.0	0.0	0.0	0.0
Operators	0.0	0.0	0.0	0.0	0.0	0.0	0.0	0.0	0.0	0.0	0.0
Infrastructure	0.0	0.0	0.0	0.0	0.0	0.0	0.0	0.0	0.0	0.0	0.0
Total	0.0	0.0	0.0	0.0	0.0	0.0	0.0	0.0	0.0	0.0	0.0

ALTERNATIVE 4 PRETREATMENT COST SUMMARY	FY22	FY23	FY24	FY25	FY26	FY27	FY28	FY29	FY30	FY31	FY32
Studies/Permitting	0	0	0	0	0	0	0	0	0	0	0
Design	0	0	0	0	0	0	0	0	0	0	0
Construction/D&D	0	0	0	0	0	0	0	0	0	0	0
Operation	0	0	0	0	0	0	0	0	0	0	0
Total	0	0	0	0	0	0	0	0	0	0	0

ALTERNATIVE 4 PRETREATMENT FTE SUMMARY	FY22	FY23	FY24	FY25	FY26	FY27	FY28	FY29	FY30	FY31	FY32
Engineer/Management	0.0	0.0	0.0	0.0	0.0	0.0	0.0	0.0	0.0	0.0	0.0
Crafts	0.0	0.0	0.0	0.0	0.0	0.0	0.0	0.0	0.0	0.0	0.0
Maintenance	0.0	0.0	0.0	0.0	0.0	0.0	0.0	0.0	0.0	0.0	0.0
Operators	0.0	0.0	0.0	0.0	0.0	0.0	0.0	0.0	0.0	0.0	0.0
Infrastructure	0.0	0.0	0.0	0.0	0.0	0.0	0.0	0.0	0.0	0.0	0.0
Total	0.0	0.0	0.0	0.0	0.0	0.0	0.0	0.0	0.0	0.0	0.0

ALTERNATIVE 4 PRETREATMENT REDDICK COST BREAKDOWN	FY33	FY34	FY35	FY36	FY37	FY38	FY39	FY40	
Activity % of Alt 4 Pretreatment Reddick Costs (%)									
Studies/Permitting	0	0	0	0	0	0	0	0	
Design	0	0	0	0	0	0	0	0	
Construction/D&D	0	0	0	0	0	0	0	0	
Operation	0	0	0	0	0	0	0	0	
Total Percentage	0	0	0	0	0	0	0	0	
Alt 4 Pretreatment Activity Reddick Costs($)									**Totals**
Studies/Permitting	0	0	0	0	0	0	0	0	1,000,000
Design	0	0	0	0	0	0	0	0	5,800,000
Construction/D&D	0	0	0	0	0	0	0	0	23,000,000
Operation	0	0	0	0	0	0	0	0	10,000,000
Total Cost	0	0	0	0	0	0	0	0	39,800,000

ALTERNATIVE 4 PRETREATMENT REDDICK FTE BREAKDOWN	FY33	FY34	FY35	FY36	FY37	FY38	FY39	FY40	Totals
Contractor Reddick FTE per Alt 4 Pretreatment Activity (FTE)									
STUDIES/PERMITTING - Site Management/Operations	0.0	0.0	0.0	0.0	0.0	0.0	0.0	0.0	5.8
STUDIES/PERMITTING - Site Infrastructure	0.0	0.0	0.0	0.0	0.0	0.0	0.0	0.0	1.0
STUDIES/PERMITTING - National Laboratories	0.0	0.0	0.0	0.0	0.0	0.0	0.0	0.0	0.3
STUDIES/PERMITTING - Site Constructors	0.0	0.0	0.0	0.0	0.0	0.0	0.0	0.0	0.0
STUDIES/PERMITTING - Architecture/Engineering Contract	0.0	0.0	0.0	0.0	0.0	0.0	0.0	0.0	0.0
STUDIES/PERMITTING - Construction Contractor	0.0	0.0	0.0	0.0	0.0	0.0	0.0	0.0	0.0
DESIGN - Site Management/Operations	0.0	0.0	0.0	0.0	0.0	0.0	0.0	0.0	3.5
DESIGN - Site Infrastructure	0.0	0.0	0.0	0.0	0.0	0.0	0.0	0.0	0.6
DESIGN - National Laboratories	0.0	0.0	0.0	0.0	0.0	0.0	0.0	0.0	3.1
DESIGN - Site Constructors	0.0	0.0	0.0	0.0	0.0	0.0	0.0	0.0	2.1
DESIGN - Architecture/Engineering Contractors	0.0	0.0	0.0	0.0	0.0	0.0	0.0	0.0	24.2
DESIGN - Construction Contractor	0.0	0.0	0.0	0.0	0.0	0.0	0.0	0.0	0.0
CONSTRUCTION/D&D - Site Management/Operations	0.0	0.0	0.0	0.0	0.0	0.0	0.0	0.0	14.0
CONSTRUCTION/D&D - Site Infrastructure	0.0	0.0	0.0	0.0	0.0	0.0	0.0	0.0	2.5
CONSTRUCTION/D&D - National Laboratories	0.0	0.0	0.0	0.0	0.0	0.0	0.0	0.0	0.0
CONSTRUCTION/D&D - Site Constructors	0.0	0.0	0.0	0.0	0.0	0.0	0.0	0.0	8.2
CONSTRUCTION/D&D - Architecture/Engineering Contracto	0.0	0.0	0.0	0.0	0.0	0.0	0.0	0.0	6.4
CONSTRUCTION/D&D - Construction Contractor	0.0	0.0	0.0	0.0	0.0	0.0	0.0	0.0	135.3
OPERATIONS - Site Management/Operations	0.0	0.0	0.0	0.0	0.0	0.0	0.0	0.0	42.5
OPERATIONS - Site Infrastructure	0.0	0.0	0.0	0.0	0.0	0.0	0.0	0.0	7.5
OPERATIONS - National Laboratories	0.0	0.0	0.0	0.0	0.0	0.0	0.0	0.0	5.4
OPERATIONS - Site Constructors	0.0	0.0	0.0	0.0	0.0	0.0	0.0	0.0	0.0
OPERATIONS - Architecture/Engineering Contractors	0.0	0.0	0.0	0.0	0.0	0.0	0.0	0.0	0.0
OPERATIONS - Construction Contractor	0.0	0.0	0.0	0.0	0.0	0.0	0.0	0.0	0.0
Worker Category Reddick FTE (FTE)									
Engineer/Management	0.0	0.0	0.0	0.0	0.0	0.0	0.0	0.0	102.5
Crafts	0.0	0.0	0.0	0.0	0.0	0.0	0.0	0.0	109.9
Maintenance	0.0	0.0	0.0	0.0	0.0	0.0	0.0	0.0	14.4
Operators	0.0	0.0	0.0	0.0	0.0	0.0	0.0	0.0	23.9
Infrastructure	0.0	0.0	0.0	0.0	0.0	0.0	0.0	0.0	11.6
Total	0.0	0.0	0.0	0.0	0.0	0.0	0.0	0.0	262.2

ALTERNATIVE 4 PRETREATMENT COST SUMMARY	FY33	FY34	FY35	FY36	FY37	FY38	FY39	FY40	Totals
Studies/Permitting	0	0	0	0	0	0	0	0	46,916,897
Design	0	0	0	0	0	0	0	0	17,418,715
Construction/D&D	0	0	0	0	0	0	0	0	55,663,317
Operation	0	0	0	0	0	0	0	0	302,837,342
Total	0	0	0	0	0	0	0	0	422,836,270

ALTERNATIVE 4 PRETREATMENT FTE SUMMARY	FY33	FY34	FY35	FY36	FY37	FY38	FY39	FY40	Totals
Engineer/Management	0.0	0.0	0.0	0.0	0.0	0.0	0.0	0.0	788.7
Crafts	0.0	0.0	0.0	0.0	0.0	0.0	0.0	0.0	265.9
Maintenance	0.0	0.0	0.0	0.0	0.0	0.0	0.0	0.0	425.6
Operators	0.0	0.0	0.0	0.0	0.0	0.0	0.0	0.0	709.3
Infrastructure	0.0	0.0	0.0	0.0	0.0	0.0	0.0	0.0	224.1
Total	0.0	0.0	0.0	0.0	0.0	0.0	0.0	0.0	2,413.5

FUNCTION - ALTERNATIVE 4 LLWV	FY95	FY96	FY97	FY98	FY99	FY00
Technology Development (Test) Cost	27,787,000	15,886,000	14,506,000	15,514,000	14,756,000	13,757,000
Perform LLW Cold Operations	0	0	0	0	0	0
Perform LLW Hot Operations First Year (Hot Test)	0	0	0	0	0	0
Subtotal Test Costs	27,787,000	15,886,000	14,506,000	15,514,000	14,756,000	13,757,000
Test Oversight Costs	2,778,700	1,588,600	1,450,600	1,551,400	1,475,600	1,375,700
Total LLWV Base Costs	**30,565,700**	**17,474,600**	**15,956,600**	**17,065,400**	**16,231,600**	**15,132,700**
Total Alt 4 Reddick Costs	1,000,000	1,000,000	3,000,000	5,000,000	12,000,000	12,000,000
LLWV % of Total Alt 4 Reddick Costs	*30*	*30*	*30*	*30*	*30*	*30*
Alt 4 LLWV Reddick Costs	**300,000**	**300,000**	**900,000**	**1,500,000**	**3,600,000**	**3,600,000**
Alt 4 LLWV Actual Costs ($)	**30,865,700**	**17,774,600**	**16,856,600**	**18,565,400**	**19,831,600**	**18,732,700**

ALTERNATIVE 4 LLWV BASE COST BREAKDOWN	FY95	FY96	FY97	FY98	FY99	FY00
Activity % of Alt 4 LLWV Base Costs (%)						
Studies/Permitting	50	50	40	40	30	25
Design	0	0	0	0	0	0
Construction/D&D	10	10	10	10	10	5
Operation	40	40	50	50	60	70
Total Percentage	**100**	**100**	**100**	**100**	**100**	**100**
Alt 4 LLWV Base Costs($)						
Studies/Permitting	15,282,850	8,737,300	6,382,640	6,826,160	4,869,480	3,783,175
Design	0	0	0	0	0	0
Construction/D&D	3,056,570	1,747,460	1,595,660	1,706,540	1,623,160	756,635
Operation	12,226,280	6,989,840	7,978,300	8,532,700	9,738,960	10,592,890
Total Cost	**30,565,700**	**17,474,600**	**15,956,600**	**17,065,400**	**16,231,600**	**15,132,700**

ALTERNATIVE 4 LLWV BASE FTE BREAKDOWN	FY95	FY96	FY97	FY98	FY99	FY00
Contractor FTE per Alt 4 LLWV Activity (FTE)						
STUDIES/PERMITTING - Site Management/Operations	69.6	39.8	29.1	31.1	22.2	17.2
STUDIES/PERMITTING - Site Infrastructure	12.3	7.0	5.1	5.5	3.9	3.0
STUDIES/PERMITTING - National Laboratories	20.5	11.7	8.6	9.2	6.5	5.1
STUDIES/PERMITTING - Site Constructors	0.0	0.0	0.0	0.0	0.0	0.0
STUDIES/PERMITTING - Architecture/Engineering Contract	0.0	0.0	0.0	0.0	0.0	0.0
STUDIES/PERMITTING - Construction Contractor	0.0	0.0	0.0	0.0	0.0	0.0
DESIGN - Site Management/Operations	0.0	0.0	0.0	0.0	0.0	0.0
DESIGN - Site Infrastructure	0.0	0.0	0.0	0.0	0.0	0.0
DESIGN - National Laboratories	0.0	0.0	0.0	0.0	0.0	0.0
DESIGN - Site Constructors	0.0	0.0	0.0	0.0	0.0	0.0
DESIGN - Architecture/Engineering Contractors	0.0	0.0	0.0	0.0	0.0	0.0
DESIGN - Construction Contractor	0.0	0.0	0.0	0.0	0.0	0.0
CONSTRUCTION/D&D - Site Management/Operations	0.9	0.5	0.5	0.5	0.5	0.2
CONSTRUCTION/D&D - Site Infrastructure	0.2	0.1	0.1	0.1	0.1	0.0
CONSTRUCTION/D&D - National Laboratories	0.8	0.5	0.4	0.5	0.4	0.2
CONSTRUCTION/D&D - Site Constructors	1.1	0.6	0.6	0.6	0.6	0.3
CONSTRUCTION/D&D - Architecture/Engineering Contracto	0.8	0.5	0.4	0.5	0.5	0.2
CONSTRUCTION/D&D - Construction Contractor	18.0	10.3	9.4	10.0	9.5	4.5
OPERATIONS - Site Management/Operations	40.8	23.3	26.6	28.5	32.5	35.4
OPERATIONS - Site Infrastructure	7.2	4.1	4.7	5.0	5.7	6.2
OPERATIONS - National Laboratories	16.4	9.4	10.7	11.4	13.1	14.2
OPERATIONS - Site Constructors	0.0	0.0	0.0	0.0	0.0	0.0
OPERATIONS - Architecture/Engineering Contractors	0.0	0.0	0.0	0.0	0.0	0.0
OPERATIONS - Construction Contractor	0.0	0.0	0.0	0.0	0.0	0.0

Worker Category Base FTE (FTE)	FY95	FY96	FY97	FY98	FY99	FY00
Engineer/Management	108.6	62.1	48.8	52.2	41.6	34.0
Crafts	14.6	8.3	7.6	8.2	7.8	3.6
Maintenance	17.2	9.8	11.2	12.0	13.7	14.9
Operators	28.6	16.4	18.7	20.0	22.8	24.8
Infrastructure	19.6	11.2	9.9	10.6	9.7	9.3
Total	**188.6**	**107.8**	**96.2**	**102.9**	**95.5**	**86.6**

FUNCTION - ALTERNATIVE 4 LLWV	FY01	FY02	FY03	FY04	FY05	FY06
Technology Development (Test) Cost	12,939,000	12,026,000	11,461,000	10,127,000	9,810,000	9,810,000
Perform LLW Cold Operations	0	0	27,083,000	39,328,000	32,662,000	0
Perform LLW Hot Operations First Year (Hot Test)	0	0	0	0	44,803,000	0
Subtotal Test Costs	12,939,000	12,026,000	38,544,000	49,455,000	87,275,000	9,810,000
Test Oversight Costs	1,293,900	1,202,600	3,854,400	4,945,500	8,727,500	981,000
Total LLWV Base Costs	**14,232,900**	**13,228,600**	**42,398,400**	**54,400,500**	**96,002,500**	**10,791,000**
Total Alt 4 Reddick Costs	30,000,000	40,000,000	45,000,000	10,000,000	10,000,000	10,000,000
LLWV % of Total Alt 4 Reddick Costs	*30*	*30*	*30*	*30*	*30*	*30*
Alt 4 LLWV Reddick Costs	**9,000,000**	**12,000,000**	**13,500,000**	**3,000,000**	**3,000,000**	**3,000,000**
Alt 4 LLWV Actual Costs ($)	**23,232,900**	**25,228,600**	**55,898,400**	**57,400,500**	**99,002,500**	**13,791,000**

ALTERNATIVE 4 LLWV BASE COST BREAKDOWN	FY01	FY02	FY03	FY04	FY05	FY06
Activity % of Alt 4 LLWV Base Costs (%)						
Studies/Permitting	0	0	0	0	0	0
Design	0	0	0	0	0	0
Construction/D&D	0	0	0	0	0	0
Operation	100	100	100	100	100	100
Total Percentage	**100**	**100**	**100**	**100**	**100**	**100**
Alt 4 LLWV Base Costs($)						
Studies/Permitting	0	0	0	0	0	0
Design	0	0	0	0	0	0
Construction/D&D	0	0	0	0	0	0
Operation	14,232,900	13,228,600	42,398,400	54,400,500	96,002,500	10,791,000
Total Cost	**14,232,900**	**13,228,600**	**42,398,400**	**54,400,500**	**96,002,500**	**10,791,000**

ALTERNATIVE 4 LLWV BASE FTE BREAKDOWN	FY01	FY02	FY03	FY04	FY05	FY06
Contractor FTE per Alt 4 LLWV Activity (FTE)						
STUDIES/PERMITTING - Site Management/Operations	0.0	0.0	0.0	0.0	0.0	0.0
STUDIES/PERMITTING - Site Infrastructure	0.0	0.0	0.0	0.0	0.0	0.0
STUDIES/PERMITTING - National Laboratories	0.0	0.0	0.0	0.0	0.0	0.0
STUDIES/PERMITTING - Site Constructors	0.0	0.0	0.0	0.0	0.0	0.0
STUDIES/PERMITTING - Architecture/Engineering Contract	0.0	0.0	0.0	0.0	0.0	0.0
STUDIES/PERMITTING - Construction Contractor	0.0	0.0	0.0	0.0	0.0	0.0
DESIGN - Site Management/Operations	0.0	0.0	0.0	0.0	0.0	0.0
DESIGN - Site Infrastructure	0.0	0.0	0.0	0.0	0.0	0.0
DESIGN - National Laboratories	0.0	0.0	0.0	0.0	0.0	0.0
DESIGN - Site Constructors	0.0	0.0	0.0	0.0	0.0	0.0
DESIGN - Architecture/Engineering Contractors	0.0	0.0	0.0	0.0	0.0	0.0
DESIGN - Construction Contractor	0.0	0.0	0.0	0.0	0.0	0.0
CONSTRUCTION/D&D - Site Management/Operations	0.0	0.0	0.0	0.0	0.0	0.0
CONSTRUCTION/D&D - Site Infrastructure	0.0	0.0	0.0	0.0	0.0	0.0
CONSTRUCTION/D&D - National Laboratories	0.0	0.0	0.0	0.0	0.0	0.0
CONSTRUCTION/D&D - Site Constructors	0.0	0.0	0.0	0.0	0.0	0.0
CONSTRUCTION/D&D - Architecture/Engineering Contracto	0.0	0.0	0.0	0.0	0.0	0.0
CONSTRUCTION/D&D - Construction Contractor	0.0	0.0	0.0	0.0	0.0	0.0
OPERATIONS - Site Management/Operations	47.5	44.2	141.6	181.7	320.6	36.0
OPERATIONS - Site Infrastructure	8.4	7.8	25.0	32.1	56.6	6.4
OPERATIONS - National Laboratories	19.1	17.7	56.9	73.0	128.8	14.5
OPERATIONS - Site Constructors	0.0	0.0	0.0	0.0	0.0	0.0
OPERATIONS - Architecture/Engineering Contractors	0.0	0.0	0.0	0.0	0.0	0.0
OPERATIONS - Construction Contractor	0.0	0.0	0.0	0.0	0.0	0.0

Worker Category Base FTE (FTE)	FY01	FY02	FY03	FY04	FY05	FY06
Engineer/Management	13.3	12.4	39.7	50.9	89.9	10.1
Crafts	0.0	0.0	0.0	0.0	0.0	0.0
Maintenance	20.0	18.6	59.5	76.4	134.8	15.2
Operators	33.3	31.0	99.2	127.3	224.7	25.3
Infrastructure	8.4	7.8	25.0	32.1	56.6	6.4
Total	**75.0**	**69.7**	**223.4**	**286.7**	**505.9**	**56.9**

FUNCTION - ALTERNATIVE 4 LLWV	FY07	FY08	FY09	FY10	FY11	FY12
Technology Development (Test) Cost	9,810,000	9,760,000	9,711,000	9,660,000	9,596,000	9,486,000
Perform LLW Cold Operations	0	0	0	0	0	0
Perform LLW Hot Operations First Year (Hot Test)	0	0	0	0	0	0
Subtotal Test Costs	9,810,000	9,760,000	9,711,000	9,660,000	9,596,000	9,486,000
Test Oversight Costs	981,000	976,000	971,100	966,000	959,600	948,600
Total LLWV Base Costs	**10,791,000**	**10,736,000**	**10,682,100**	**10,626,000**	**10,555,600**	**10,434,600**
Total Alt 4 Reddick Costs	10,000,000	10,000,000	0	0		
LLWV % of Total Alt 4 Reddick Costs	*30*	*30*	*0*	*0*		
Alt 4 LLWV Reddick Costs	**3,000,000**	**3,000,000**	**0**	**0**	**0**	**0**
Alt 4 LLWV Actual Costs ($)	**13,791,000**	**13,736,000**	**10,682,100**	**10,626,000**	**10,555,600**	**10,434,600**

ALTERNATIVE 4 LLWV BASE COST BREAKDOWN	FY07	FY08	FY09	FY10	FY11	FY12
Activity % of Alt 4 LLWV Base Costs (%)						
Studies/Permitting	0	0	0	0	0	0
Design	0	0	0	0	0	0
Construction/D&D	0	0	0	0	0	0
Operation	100	100	100	100	100	100
Total Percentage	**100**	**100**	**100**	**100**	**100**	**100**
Alt 4 LLWV Base Costs($)						
Studies/Permitting	0	0	0	0	0	0
Design	0	0	0	0	0	0
Construction/D&D	0	0	0	0	0	0
Operation	10,791,000	10,736,000	10,682,100	10,626,000	10,555,600	10,434,600
Total Cost	**10,791,000**	**10,736,000**	**10,682,100**	**10,626,000**	**10,555,600**	**10,434,600**

ALTERNATIVE 4 LLWV BASE FTE BREAKDOWN	FY07	FY08	FY09	FY10	FY11	FY12
Contractor FTE per Alt 4 LLWV Activity (FTE)						
STUDIES/PERMITTING - Site Management/Operations	0.0	0.0	0.0	0.0	0.0	0.0
STUDIES/PERMITTING - Site Infrastructure	0.0	0.0	0.0	0.0	0.0	0.0
STUDIES/PERMITTING - National Laboratories	0.0	0.0	0.0	0.0	0.0	0.0
STUDIES/PERMITTING - Site Constructors	0.0	0.0	0.0	0.0	0.0	0.0
STUDIES/PERMITTING - Architecture/Engineering Contract	0.0	0.0	0.0	0.0	0.0	0.0
STUDIES/PERMITTING - Construction Contractor	0.0	0.0	0.0	0.0	0.0	0.0
DESIGN - Site Management/Operations	0.0	0.0	0.0	0.0	0.0	0.0
DESIGN - Site Infrastructure	0.0	0.0	0.0	0.0	0.0	0.0
DESIGN - National Laboratories	0.0	0.0	0.0	0.0	0.0	0.0
DESIGN - Site Constructors	0.0	0.0	0.0	0.0	0.0	0.0
DESIGN - Architecture/Engineering Contractors	0.0	0.0	0.0	0.0	0.0	0.0
DESIGN - Construction Contractor	0.0	0.0	0.0	0.0	0.0	0.0
CONSTRUCTION/D&D - Site Management/Operations	0.0	0.0	0.0	0.0	0.0	0.0
CONSTRUCTION/D&D - Site Infrastructure	0.0	0.0	0.0	0.0	0.0	0.0
CONSTRUCTION/D&D - National Laboratories	0.0	0.0	0.0	0.0	0.0	0.0
CONSTRUCTION/D&D - Site Constructors	0.0	0.0	0.0	0.0	0.0	0.0
CONSTRUCTION/D&D - Architecture/Engineering Contracto	0.0	0.0	0.0	0.0	0.0	0.0
CONSTRUCTION/D&D - Construction Contractor	0.0	0.0	0.0	0.0	0.0	0.0
OPERATIONS - Site Management/Operations	36.0	35.9	35.7	35.5	35.2	34.8
OPERATIONS - Site Infrastructure	6.4	6.3	6.3	6.3	6.2	6.1
OPERATIONS - National Laboratories	14.5	14.4	14.3	14.3	14.2	14.0
OPERATIONS - Site Constructors	0.0	0.0	0.0	0.0	0.0	0.0
OPERATIONS - Architecture/Engineering Contractors	0.0	0.0	0.0	0.0	0.0	0.0
OPERATIONS - Construction Contractor	0.0	0.0	0.0	0.0	0.0	0.0

Worker Category Base FTE (FTE)	FY07	FY08	FY09	FY10	FY11	FY12
Engineer/Management	10.1	10.1	10.0	9.9	9.9	9.8
Crafts	0.0	0.0	0.0	0.0	0.0	0.0
Maintenance	15.2	15.1	15.0	14.9	14.8	14.7
Operators	25.3	25.1	25.0	24.9	24.7	24.4
Infrastructure	6.4	6.3	6.3	6.3	6.2	6.1
Total	**56.9**	**56.6**	**56.3**	**56.0**	**55.6**	**55.0**

FUNCTION - ALTERNATIVE 4 LLWV	FY13	FY14	FY15	FY16	FY17	FY18	FY19	FY20	FY21
Technology Development (Test) Cost	9,427,000	3,730,000	107,000	88,000	30,000	0	0	0	0
Perform LLW Cold Operations	0	0	0	0	0	0	0	0	0
Perform LLW Hot Operations First Year (Hot Test)	0	0	0	0	0	0	0	0	0
Subtotal Test Costs	9,427,000	3,730,000	107,000	88,000	30,000	0	0	0	0
Test Oversight Costs	942,700	373,000	10,700	8,800	3,000	0	0	0	0
Total LLWV Base Costs	**10,369,700**	**4,103,000**	**117,700**	**96,800**	**33,000**	**0**	**0**	**0**	**0**
Total Alt 4 Reddick Costs									
LLWV % of Total Alt 4 Reddick Costs									
Alt 4 LLWV Reddick Costs	**0**	**0**	**0**	**0**	**0**	**0**	**0**	**0**	**0**
Alt 4 LLWV Actual Costs ($)	**10,369,700**	**4,103,000**	**117,700**	**96,800**	**33,000**	**0**	**0**	**0**	**0**

ALTERNATIVE 4 LLWV BASE COST BREAKDOWN	FY13	FY14	FY15	FY16	FY17	FY18	FY19	FY20	FY21
Activity % of Alt 4 LLWV Base Costs (%)									
Studies/Permitting	0	0	0	0	0	0	0	0	0
Design	0	0	0	0	0	0	0	0	0
Construction/D&D	0	0	0	0	0	0	0	0	0
Operation	100	100	100	100	100	0	0	0	0
Total Percentage	**100**	**100**	**100**	**100**	**100**	**0**	**0**	**0**	**0**
Alt 4 LLWV Base Costs($)									
Studies/Permitting	0	0	0	0	0	0	0	0	0
Design	0	0	0	0	0	0	0	0	0
Construction/D&D	0	0	0	0	0	0	0	0	0
Operation	10,369,700	4,103,000	117,700	96,800	33,000	0	0	0	0
Total Cost	**10,369,700**	**4,103,000**	**117,700**	**96,800**	**33,000**	**0**	**0**	**0**	**0**

ALTERNATIVE 4 LLWV BASE FTE BREAKDOWN	FY13	FY14	FY15	FY16	FY17	FY18	FY19	FY20	FY21
Contractor FTE per Alt 4 LLWV Activity (FTE)									
STUDIES/PERMITTING - Site Management/Operations	0.0	0.0	0.0	0.0	0.0	0.0	0.0	0.0	0.0
STUDIES/PERMITTING - Site Infrastructure	0.0	0.0	0.0	0.0	0.0	0.0	0.0	0.0	0.0
STUDIES/PERMITTING - National Laboratories	0.0	0.0	0.0	0.0	0.0	0.0	0.0	0.0	0.0
STUDIES/PERMITTING - Site Constructors	0.0	0.0	0.0	0.0	0.0	0.0	0.0	0.0	0.0
STUDIES/PERMITTING - Architecture/Engineering Contract	0.0	0.0	0.0	0.0	0.0	0.0	0.0	0.0	0.0
STUDIES/PERMITTING - Construction Contractor	0.0	0.0	0.0	0.0	0.0	0.0	0.0	0.0	0.0
DESIGN - Site Management/Operations	0.0	0.0	0.0	0.0	0.0	0.0	0.0	0.0	0.0
DESIGN - Site Infrastructure	0.0	0.0	0.0	0.0	0.0	0.0	0.0	0.0	0.0
DESIGN - National Laboratories	0.0	0.0	0.0	0.0	0.0	0.0	0.0	0.0	0.0
DESIGN - Site Constructors	0.0	0.0	0.0	0.0	0.0	0.0	0.0	0.0	0.0
DESIGN - Architecture/Engineering Contractors	0.0	0.0	0.0	0.0	0.0	0.0	0.0	0.0	0.0
DESIGN - Construction Contractor	0.0	0.0	0.0	0.0	0.0	0.0	0.0	0.0	0.0
CONSTRUCTION/D&D - Site Management/Operations	0.0	0.0	0.0	0.0	0.0	0.0	0.0	0.0	0.0
CONSTRUCTION/D&D - Site Infrastructure	0.0	0.0	0.0	0.0	0.0	0.0	0.0	0.0	0.0
CONSTRUCTION/D&D - National Laboratories	0.0	0.0	0.0	0.0	0.0	0.0	0.0	0.0	0.0
CONSTRUCTION/D&D - Site Constructors	0.0	0.0	0.0	0.0	0.0	0.0	0.0	0.0	0.0
CONSTRUCTION/D&D - Architecture/Engineering Contracto	0.0	0.0	0.0	0.0	0.0	0.0	0.0	0.0	0.0
CONSTRUCTION/D&D - Construction Contractor	0.0	0.0	0.0	0.0	0.0	0.0	0.0	0.0	0.0
OPERATIONS - Site Management/Operations	34.6	13.7	0.4	0.3	0.1	0.0	0.0	0.0	0.0
OPERATIONS - Site Infrastructure	6.1	2.4	0.1	0.1	0.0	0.0	0.0	0.0	0.0
OPERATIONS - National Laboratories	13.9	5.5	0.2	0.1	0.0	0.0	0.0	0.0	0.0
OPERATIONS - Site Constructors	0.0	0.0	0.0	0.0	0.0	0.0	0.0	0.0	0.0
OPERATIONS - Architecture/Engineering Contractors	0.0	0.0	0.0	0.0	0.0	0.0	0.0	0.0	0.0
OPERATIONS - Construction Contractor	0.0	0.0	0.0	0.0	0.0	0.0	0.0	0.0	0.0

Worker Category Base FTE (FTE)	FY13	FY14	FY15	FY16	FY17	FY18	FY19	FY20	FY21
Engineer/Management	9.7	3.8	0.1	0.1	0.0	0.0	0.0	0.0	0.0
Crafts	0.0	0.0	0.0	0.0	0.0	0.0	0.0	0.0	0.0
Maintenance	14.6	5.8	0.2	0.1	0.0	0.0	0.0	0.0	0.0
Operators	24.3	9.6	0.3	0.2	0.1	0.0	0.0	0.0	0.0
Infrastructure	6.1	2.4	0.1	0.1	0.0	0.0	0.0	0.0	0.0
Total	**54.6**	**21.6**	**0.6**	**0.5**	**0.2**	**0.0**	**0.0**	**0.0**	**0.0**

FUNCTION - ALTERNATIVE 4 LLWV	FY22	FY23	FY24	FY25	FY26	FY27	FY28	FY29	FY30	FY31	FY32
Technology Development (Test) Cost	0	0	0	0	0	0	0	0	0	0	0
Perform LLW Cold Operations	0	0	0	0	0	0	0	0	0	0	0
Perform LLW Hot Operations First Year (Hot Test)	0	0	0	0	0	0	0	0	0	0	0
Subtotal Test Costs	0	0	0	0	0	0	0	0	0	0	0
Test Oversight Costs	0	0	0	0	0	0	0	0	0	0	0
Total LLWV Base Costs	0	0	0	0	0	0	0	0	0	0	0
Total Alt 4 Reddick Costs											
LLWV % of Total Alt 4 Reddick Costs											
Alt 4 LLWV Reddick Costs	0	0	0	0	0	0	0	0	0	0	0
Alt 4 LLWV Actual Costs ($)	0	0	0	0	0	0	0	0	0	0	0

ALTERNATIVE 4 LLWV BASE COST BREAKDOWN	FY22	FY23	FY24	FY25	FY26	FY27	FY28	FY29	FY30	FY31	FY32
Activity % of Alt 4 LLWV Base Costs (%)											
Studies/Permitting	0	0	0	0	0	0	0	0	0	0	0
Design	0	0	0	0	0	0	0	0	0	0	0
Construction/D&D	0	0	0	0	0	0	0	0	0	0	0
Operation	0	0	0	0	0	0	0	0	0	0	0
Total Percentage	0	0	0	0	0	0	0	0	0	0	0
Alt 4 LLWV Base Costs($)											
Studies/Permitting	0	0	0	0	0	0	0	0	0	0	0
Design	0	0	0	0	0	0	0	0	0	0	0
Construction/D&D	0	0	0	0	0	0	0	0	0	0	0
Operation	0	0	0	0	0	0	0	0	0	0	0
Total Cost	0	0	0	0	0	0	0	0	0	0	0

ALTERNATIVE 4 LLWV BASE FTE BREAKDOWN	FY22	FY23	FY24	FY25	FY26	FY27	FY28	FY29	FY30	FY31	FY32
Contractor FTE per Alt 4 LLWV Activity (FTE)											
STUDIES/PERMITTING - Site Management/Operations	0.0	0.0	0.0	0.0	0.0	0.0	0.0	0.0	0.0	0.0	0.0
STUDIES/PERMITTING - Site Infrastructure	0.0	0.0	0.0	0.0	0.0	0.0	0.0	0.0	0.0	0.0	0.0
STUDIES/PERMITTING - National Laboratories	0.0	0.0	0.0	0.0	0.0	0.0	0.0	0.0	0.0	0.0	0.0
STUDIES/PERMITTING - Site Constructors	0.0	0.0	0.0	0.0	0.0	0.0	0.0	0.0	0.0	0.0	0.0
STUDIES/PERMITTING - Architecture/Engineering Contract	0.0	0.0	0.0	0.0	0.0	0.0	0.0	0.0	0.0	0.0	0.0
STUDIES/PERMITTING - Construction Contractor	0.0	0.0	0.0	0.0	0.0	0.0	0.0	0.0	0.0	0.0	0.0
DESIGN - Site Management/Operations	0.0	0.0	0.0	0.0	0.0	0.0	0.0	0.0	0.0	0.0	0.0
DESIGN - Site Infrastructure	0.0	0.0	0.0	0.0	0.0	0.0	0.0	0.0	0.0	0.0	0.0
DESIGN - National Laboratories	0.0	0.0	0.0	0.0	0.0	0.0	0.0	0.0	0.0	0.0	0.0
DESIGN - Site Constructors	0.0	0.0	0.0	0.0	0.0	0.0	0.0	0.0	0.0	0.0	0.0
DESIGN - Architecture/Engineering Contractors	0.0	0.0	0.0	0.0	0.0	0.0	0.0	0.0	0.0	0.0	0.0
DESIGN - Construction Contractor	0.0	0.0	0.0	0.0	0.0	0.0	0.0	0.0	0.0	0.0	0.0
CONSTRUCTION/D&D - Site Management/Operations	0.0	0.0	0.0	0.0	0.0	0.0	0.0	0.0	0.0	0.0	0.0
CONSTRUCTION/D&D - Site Infrastructure	0.0	0.0	0.0	0.0	0.0	0.0	0.0	0.0	0.0	0.0	0.0
CONSTRUCTION/D&D - National Laboratories	0.0	0.0	0.0	0.0	0.0	0.0	0.0	0.0	0.0	0.0	0.0
CONSTRUCTION/D&D - Site Constructors	0.0	0.0	0.0	0.0	0.0	0.0	0.0	0.0	0.0	0.0	0.0
CONSTRUCTION/D&D - Architecture/Engineering Contracto	0.0	0.0	0.0	0.0	0.0	0.0	0.0	0.0	0.0	0.0	0.0
CONSTRUCTION/D&D - Construction Contractor	0.0	0.0	0.0	0.0	0.0	0.0	0.0	0.0	0.0	0.0	0.0
OPERATIONS - Site Management/Operations	0.0	0.0	0.0	0.0	0.0	0.0	0.0	0.0	0.0	0.0	0.0
OPERATIONS - Site Infrastructure	0.0	0.0	0.0	0.0	0.0	0.0	0.0	0.0	0.0	0.0	0.0
OPERATIONS - National Laboratories	0.0	0.0	0.0	0.0	0.0	0.0	0.0	0.0	0.0	0.0	0.0
OPERATIONS - Site Constructors	0.0	0.0	0.0	0.0	0.0	0.0	0.0	0.0	0.0	0.0	0.0
OPERATIONS - Architecture/Engineering Contractors	0.0	0.0	0.0	0.0	0.0	0.0	0.0	0.0	0.0	0.0	0.0
OPERATIONS - Construction Contractor	0.0	0.0	0.0	0.0	0.0	0.0	0.0	0.0	0.0	0.0	0.0

Worker Category Base FTE (FTE)	FY22	FY23	FY24	FY25	FY26	FY27	FY28	FY29	FY30	FY31	FY32
Engineer/Management	0.0	0.0	0.0	0.0	0.0	0.0	0.0	0.0	0.0	0.0	0.0
Crafts	0.0	0.0	0.0	0.0	0.0	0.0	0.0	0.0	0.0	0.0	0.0
Maintenance	0.0	0.0	0.0	0.0	0.0	0.0	0.0	0.0	0.0	0.0	0.0
Operators	0.0	0.0	0.0	0.0	0.0	0.0	0.0	0.0	0.0	0.0	0.0
Infrastructure	0.0	0.0	0.0	0.0	0.0	0.0	0.0	0.0	0.0	0.0	0.0
Total	0.0	0.0	0.0	0.0	0.0	0.0	0.0	0.0	0.0	0.0	0.0

FUNCTION - ALTERNATIVE 4 LLWV	FY33	FY34	FY35	FY36	FY37	FY38	FY39	FY40	Totals
Technology Development (Test) Cost	0	0	0	0	0	0	0	0	239,784,000
Perform LLW Cold Operations	0	0	0	0	0	0	0	0	
Perform LLW Hot Operations First Year (Hot Test)	0	0	0	0	0	0	0	0	44,803,000
Subtotal Test Costs	0	0	0	0	0	0	0	0	383,660,000
Test Oversight Costs	0	0	0	0	0	0	0	0	38,366,000
Total LLWV Base Costs	0	0	0	0	0	0	0	0	422,026,000
Total Alt 4 Reddick Costs									199,000,000
LLWV % of Total Alt 4 Reddick Costs									420
Alt 4 LLWV Reddick Costs	0	0	0	0	0	0	0	0	59,700,000
Alt 4 LLWV Actual Costs ($)	0	0	0	0	0	0	0	0	481,726,000

ALTERNATIVE 4 LLWV BASE COST BREAKDOWN	FY33	FY34	FY35	FY36	FY37	FY38	FY39	FY40	
Activity % of Alt 4 LLWV Base Costs (%)									
Studies/Permitting	0	0	0	0	0	0	0	0	
Design	0	0	0	0	0	0	0	0	
Construction/D&D	0	0	0	0	0	0	0	0	
Operation	0	0	0	0	0	0	0	0	
Total Percentage	0	0	0	0	0	0	0	0	
Alt 4 LLWV Base Costs($)									**Totals**
Studies/Permitting	0	0	0	0	0	0	0	0	45,881,605
Design	0	0	0	0	0	0	0	0	0
Construction/D&D	0	0	0	0	0	0	0	0	10,486,025
Operation	0	0	0	0	0	0	0	0	365,658,370
Total Cost	0	0	0	0	0	0	0	0	422,026,000

ALTERNATIVE 4 LLWV BASE FTE BREAKDOWN	FY33	FY34	FY35	FY36	FY37	FY38	FY39	FY40	Totals
Contractor FTE per Alt 4 LLWV Activity (FTE)									
STUDIES/PERMITTING - Site Management/Operations	0.0	0.0	0.0	0.0	0.0	0.0	0.0	0.0	208.9
STUDIES/PERMITTING - Site Infrastructure	0.0	0.0	0.0	0.0	0.0	0.0	0.0	0.0	36.9
STUDIES/PERMITTING - National Laboratories	0.0	0.0	0.0	0.0	0.0	0.0	0.0	0.0	61.6
STUDIES/PERMITTING - Site Constructors	0.0	0.0	0.0	0.0	0.0	0.0	0.0	0.0	0.0
STUDIES/PERMITTING - Architecture/Engineering Contract	0.0	0.0	0.0	0.0	0.0	0.0	0.0	0.0	0.0
STUDIES/PERMITTING - Construction Contractor	0.0	0.0	0.0	0.0	0.0	0.0	0.0	0.0	0.0
DESIGN - Site Management/Operations	0.0	0.0	0.0	0.0	0.0	0.0	0.0	0.0	0.0
DESIGN - Site Infrastructure	0.0	0.0	0.0	0.0	0.0	0.0	0.0	0.0	0.0
DESIGN - National Laboratories	0.0	0.0	0.0	0.0	0.0	0.0	0.0	0.0	0.0
DESIGN - Site Constructors	0.0	0.0	0.0	0.0	0.0	0.0	0.0	0.0	0.0
DESIGN - Architecture/Engineering Contractors	0.0	0.0	0.0	0.0	0.0	0.0	0.0	0.0	0.0
DESIGN - Construction Contractor	0.0	0.0	0.0	0.0	0.0	0.0	0.0	0.0	0.0
CONSTRUCTION/D&D - Site Management/Operations	0.0	0.0	0.0	0.0	0.0	0.0	0.0	0.0	3.2
CONSTRUCTION/D&D - Site Infrastructure	0.0	0.0	0.0	0.0	0.0	0.0	0.0	0.0	0.6
CONSTRUCTION/D&D - National Laboratories	0.0	0.0	0.0	0.0	0.0	0.0	0.0	0.0	2.8
CONSTRUCTION/D&D - Site Constructors	0.0	0.0	0.0	0.0	0.0	0.0	0.0	0.0	3.7
CONSTRUCTION/D&D - Architecture/Engineering Contracto	0.0	0.0	0.0	0.0	0.0	0.0	0.0	0.0	2.9
CONSTRUCTION/D&D - Construction Contractor	0.0	0.0	0.0	0.0	0.0	0.0	0.0	0.0	61.7
OPERATIONS - Site Management/Operations	0.0	0.0	0.0	0.0	0.0	0.0	0.0	0.0	1,221.0
OPERATIONS - Site Infrastructure	0.0	0.0	0.0	0.0	0.0	0.0	0.0	0.0	215.5
OPERATIONS - National Laboratories	0.0	0.0	0.0	0.0	0.0	0.0	0.0	0.0	490.5
OPERATIONS - Site Constructors	0.0	0.0	0.0	0.0	0.0	0.0	0.0	0.0	0.0
OPERATIONS - Architecture/Engineering Contractors	0.0	0.0	0.0	0.0	0.0	0.0	0.0	0.0	0.0
OPERATIONS - Construction Contractor	0.0	0.0	0.0	0.0	0.0	0.0	0.0	0.0	0.0

Worker Category Base FTE (FTE)	FY33	FY34	FY35	FY36	FY37	FY38	FY39	FY40	Totals
Engineer/Management	0.0	0.0	0.0	0.0	0.0	0.0	0.0	0.0	637.0
Crafts	0.0	0.0	0.0	0.0	0.0	0.0	0.0	0.0	50.1
Maintenance	0.0	0.0	0.0	0.0	0.0	0.0	0.0	0.0	513.5
Operators	0.0	0.0	0.0	0.0	0.0	0.0	0.0	0.0	855.8
Infrastructure	0.0	0.0	0.0	0.0	0.0	0.0	0.0	0.0	252.9
Total	0.0	0.0	0.0	0.0	0.0	0.0	0.0	0.0	2,309.3

ALTERNATIVE 4 LLWV REDDICK COST BREAKDOWN	FY95	FY96	FY97	FY98	FY99	FY00
Activity % of Alt 4 LLWV Reddick Costs (%)						
Studies/Permitting	100	100	100	0	0	0
Design	0	0	0	100	100	100
Construction/D&D	0	0	0	0	0	0
Operation	0	0	0	0	0	0
Total Percentage	100	100	100	100	100	100
Alt 4 LLWV Reddick Costs($)						
Studies/Permitting	300,000	300,000	900,000	0	0	0
Design	0	0	0	1,500,000	3,600,000	3,600,000
Construction/D&D	0	0	0	0	0	0
Operation	0	0	0	0	0	0
Total Cost	300,000	300,000	900,000	1,500,000	3,600,000	3,600,000

ALTERNATIVE 4 LLWV REDDICK FTE BREAKDOWN	FY95	FY96	FY97	FY98	FY99	FY00
Contractor FTE per Alt 4 LLWV Activity (FTE)						
STUDIES/PERMITTING - Site Management/Operations	1.7	1.7	5.2	0.0	0.0	0.0
STUDIES/PERMITTING - Site Infrastructure	0.3	0.3	0.9	0.0	0.0	0.0
STUDIES/PERMITTING - National Laboratories	0.1	0.1	0.2	0.0	0.0	0.0
STUDIES/PERMITTING - Site Constructors	0.0	0.0	0.0	0.0	0.0	0.0
STUDIES/PERMITTING - Architecture/Engineering Contract	0.0	0.0	0.0	0.0	0.0	0.0
STUDIES/PERMITTING - Construction Contractor	0.0	0.0	0.0	0.0	0.0	0.0
DESIGN - Site Management/Operations	0.0	0.0	0.0	0.9	2.2	2.2
DESIGN - Site Infrastructure	0.0	0.0	0.0	0.2	0.4	0.4
DESIGN - National Laboratories	0.0	0.0	0.0	0.8	1.9	1.9
DESIGN - Site Constructors	0.0	0.0	0.0	0.5	1.3	1.3
DESIGN - Architecture/Engineering Contractors	0.0	0.0	0.0	6.3	15.0	15.0
DESIGN - Construction Contractor	0.0	0.0	0.0	0.0	0.0	0.0
CONSTRUCTION/D&D - Site Management/Operations	0.0	0.0	0.0	0.0	0.0	0.0
CONSTRUCTION/D&D - Site Infrastructure	0.0	0.0	0.0	0.0	0.0	0.0
CONSTRUCTION/D&D - National Laboratories	0.0	0.0	0.0	0.0	0.0	0.0
CONSTRUCTION/D&D - Site Constructors	0.0	0.0	0.0	0.0	0.0	0.0
CONSTRUCTION/D&D - Architecture/Engineering Contracto	0.0	0.0	0.0	0.0	0.0	0.0
CONSTRUCTION/D&D - Construction Contractor	0.0	0.0	0.0	0.0	0.0	0.0
OPERATIONS - Site Management/Operations	0.0	0.0	0.0	0.0	0.0	0.0
OPERATIONS - Site Infrastructure	0.0	0.0	0.0	0.0	0.0	0.0
OPERATIONS - National Laboratories	0.0	0.0	0.0	0.0	0.0	0.0
OPERATIONS - Site Constructors	0.0	0.0	0.0	0.0	0.0	0.0
OPERATIONS - Architecture/Engineering Contractors	0.0	0.0	0.0	0.0	0.0	0.0
OPERATIONS - Construction Contractor	0.0	0.0	0.0	0.0	0.0	0.0
Worker Category Reddick FTE (FTE)						
Engineer/Management	1.8	1.8	5.4	8.5	20.4	20.4
Crafts	0.0	0.0	0.0	0.0	0.0	0.0
Maintenance	0.0	0.0	0.0	0.0	0.0	0.0
Operators	0.0	0.0	0.0	0.0	0.0	0.0
Infrastructure	0.3	0.3	0.9	0.2	0.4	0.4
Total	2.1	2.1	6.3	8.7	20.8	20.8

ALTERNATIVE 4 LLWV COST SUMMARY	FY95	FY96	FY97	FY98	FY99	FY00
Studies/Permitting	15,582,850	9,037,300	7,282,640	6,826,160	4,869,480	3,783,175
Design	0	0	0	1,500,000	3,600,000	3,600,000
Construction/D&D	3,056,570	1,747,460	1,595,660	1,706,540	1,623,160	756,635
Operation	12,226,280	6,989,840	7,978,300	8,532,700	9,738,960	10,592,890
Total	30,865,700	17,774,600	16,856,600	18,565,400	19,831,600	18,732,700

ALTERNATIVE 4 LLWV FTE SUMMARY	FY95	FY96	FY97	FY98	FY99	FY00
Engineer/Management	110.4	63.9	54.2	60.7	62.0	54.4
Crafts	14.6	8.3	7.6	8.2	7.8	3.6
Maintenance	17.2	9.8	11.2	12.0	13.7	14.9
Operators	28.6	16.4	18.7	20.0	22.8	24.8
Infrastructure	20.0	11.5	10.8	10.8	10.1	9.7
Total	190.8	110.0	102.5	111.5	116.3	107.4

ALTERNATIVE 4 LLWV REDDICK COST BREAKDOWN	FY01	FY02	FY03	FY04	FY05	FY06
Activity % of Alt 4 LLWV Reddick Costs (%)						
Studies/Permitting	0	0	0	0	0	0
Design	0	0	0	0	0	0
Construction/D&D	100	100	100	0	0	0
Operation	0	0	0	100	100	100
Total Percentage	**100**	**100**	**100**	**100**	**100**	**100**
Alt 4 LLWV Reddick Costs($)						
Studies/Permitting	0	0	0	0	0	0
Design	0	0	0	0	0	0
Construction/D&D	9,000,000	12,000,000	13,500,000	0	0	0
Operation	0	0	0	3,000,000	3,000,000	3,000,000
Total Cost	**9,000,000**	**12,000,000**	**13,500,000**	**3,000,000**	**3,000,000**	**3,000,000**

ALTERNATIVE 4 LLWV REDDICK FTE BREAKDOWN	FY01	FY02	FY03	FY04	FY05	FY06
Contractor FTE per Alt 4 LLWV Activity (FTE)						
STUDIES/PERMITTING - Site Management/Operations	0.0	0.0	0.0	0.0	0.0	0.0
STUDIES/PERMITTING - Site Infrastructure	0.0	0.0	0.0	0.0	0.0	0.0
STUDIES/PERMITTING - National Laboratories	0.0	0.0	0.0	0.0	0.0	0.0
STUDIES/PERMITTING - Site Constructors	0.0	0.0	0.0	0.0	0.0	0.0
STUDIES/PERMITTING - Architecture/Engineering Contract	0.0	0.0	0.0	0.0	0.0	0.0
STUDIES/PERMITTING - Construction Contractor	0.0	0.0	0.0	0.0	0.0	0.0
DESIGN - Site Management/Operations	0.0	0.0	0.0	0.0	0.0	0.0
DESIGN - Site Infrastructure	0.0	0.0	0.0	0.0	0.0	0.0
DESIGN - National Laboratories	0.0	0.0	0.0	0.0	0.0	0.0
DESIGN - Site Constructors	0.0	0.0	0.0	0.0	0.0	0.0
DESIGN - Architecture/Engineering Contractors	0.0	0.0	0.0	0.0	0.0	0.0
DESIGN - Construction Contractor	0.0	0.0	0.0	0.0	0.0	0.0
CONSTRUCTION/D&D - Site Management/Operations	5.5	7.3	8.2	0.0	0.0	0.0
CONSTRUCTION/D&D - Site Infrastructure	1.0	1.3	1.4	0.0	0.0	0.0
CONSTRUCTION/D&D - National Laboratories	0.0	0.0	0.0	0.0	0.0	0.0
CONSTRUCTION/D&D - Site Constructors	3.2	4.3	4.8	0.0	0.0	0.0
CONSTRUCTION/D&D - Architecture/Engineering Contracto	2.5	3.3	3.8	0.0	0.0	0.0
CONSTRUCTION/D&D - Construction Contractor	52.9	70.6	79.4	0.0	0.0	0.0
OPERATIONS - Site Management/Operations	0.0	0.0	0.0	12.8	12.8	12.8
OPERATIONS - Site Infrastructure	0.0	0.0	0.0	2.3	2.3	2.3
OPERATIONS - National Laboratories	0.0	0.0	0.0	1.6	1.6	1.6
OPERATIONS - Site Constructors	0.0	0.0	0.0	0.0	0.0	0.0
OPERATIONS - Architecture/Engineering Contractors	0.0	0.0	0.0	0.0	0.0	0.0
OPERATIONS - Construction Contractor	0.0	0.0	0.0	0.0	0.0	0.0
Worker Category Reddick FTE (FTE)						
Engineer/Management	21.1	28.2	31.7	2.9	2.9	2.9
Crafts	43.0	57.3	64.5	0.0	0.0	0.0
Maintenance	0.0	0.0	0.0	4.3	4.3	4.3
Operators	0.0	0.0	0.0	7.2	7.2	7.2
Infrastructure	1.0	1.3	1.4	2.3	2.3	2.3
Total	**65.1**	**86.8**	**97.6**	**16.6**	**16.6**	**16.6**

ALTERNATIVE 4 LLWV COST SUMMARY	FY01	FY02	FY03	FY04	FY05	FY06
Studies/Permitting	**0**	**0**	**0**	**0**	**0**	**0**
Design	**0**	**0**	**0**	**0**	**0**	**0**
Construction/D&D	**9,000,000**	**12,000,000**	**13,500,000**	**0**	**0**	**0**
Operation	**14,232,900**	**13,228,600**	**42,398,400**	**57,400,500**	**99,002,500**	**13,791,000**
Total	**23,232,900**	**25,228,600**	**55,898,400**	**57,400,500**	**99,002,500**	**13,791,000**

ALTERNATIVE 4 LLWV FTE SUMMARY	FY01	FY02	FY03	FY04	FY05	FY06
Engineer/Management	34.4	40.5	71.4	53.8	92.7	13.0
Crafts	43.0	57.3	64.5	0.0	0.0	0.0
Maintenance	20.0	18.6	59.5	80.7	139.1	19.5
Operators	33.3	31.0	99.2	134.5	231.9	32.4
Infrastructure	9.4	9.1	26.4	34.3	58.8	8.6
Total	**140.1**	**156.5**	**321.1**	**303.3**	**522.6**	**73.5**

ALTERNATIVE 4 LLWV REDDICK COST BREAKDOWN	FY07	FY08	FY09	FY10	FY11	FY12
Activity % of Alt 4 LLWV Reddick Costs (%)						
Studies/Permitting	0	0	0	0	0	0
Design	0	0	0	0	0	0
Construction/D&D	0	0	0	0	0	0
Operation	100	100	0	0	0	0
Total Percentage	100	100	0	0	0	0
Alt 4 LLWV Reddick Costs($)						
Studies/Permitting	0	0	0	0	0	0
Design	0	0	0	0	0	0
Construction/D&D	0	0	0	0	0	0
Operation	3,000,000	3,000,000	0	0	0	0
Total Cost	3,000,000	3,000,000	0	0	0	0

ALTERNATIVE 4 LLWV REDDICK FTE BREAKDOWN	FY07	FY08	FY09	FY10	FY11	FY12
Contractor FTE per Alt 4 LLWV Activity (FTE)						
STUDIES/PERMITTING - Site Management/Operations	0.0	0.0	0.0	0.0	0.0	0.0
STUDIES/PERMITTING - Site Infrastructure	0.0	0.0	0.0	0.0	0.0	0.0
STUDIES/PERMITTING - National Laboratories	0.0	0.0	0.0	0.0	0.0	0.0
STUDIES/PERMITTING - Site Constructors	0.0	0.0	0.0	0.0	0.0	0.0
STUDIES/PERMITTING - Architecture/Engineering Contract	0.0	0.0	0.0	0.0	0.0	0.0
STUDIES/PERMITTING - Construction Contractor	0.0	0.0	0.0	0.0	0.0	0.0
DESIGN - Site Management/Operations	0.0	0.0	0.0	0.0	0.0	0.0
DESIGN - Site Infrastructure	0.0	0.0	0.0	0.0	0.0	0.0
DESIGN - National Laboratories	0.0	0.0	0.0	0.0	0.0	0.0
DESIGN - Site Constructors	0.0	0.0	0.0	0.0	0.0	0.0
DESIGN - Architecture/Engineering Contractors	0.0	0.0	0.0	0.0	0.0	0.0
DESIGN - Construction Contractor	0.0	0.0	0.0	0.0	0.0	0.0
CONSTRUCTION/D&D - Site Management/Operations	0.0	0.0	0.0	0.0	0.0	0.0
CONSTRUCTION/D&D - Site Infrastructure	0.0	0.0	0.0	0.0	0.0	0.0
CONSTRUCTION/D&D - National Laboratories	0.0	0.0	0.0	0.0	0.0	0.0
CONSTRUCTION/D&D - Site Constructors	0.0	0.0	0.0	0.0	0.0	0.0
CONSTRUCTION/D&D - Architecture/Engineering Contracto	0.0	0.0	0.0	0.0	0.0	0.0
CONSTRUCTION/D&D - Construction Contractor	0.0	0.0	0.0	0.0	0.0	0.0
OPERATIONS - Site Management/Operations	12.8	12.8	0.0	0.0	0.0	0.0
OPERATIONS - Site Infrastructure	2.3	2.3	0.0	0.0	0.0	0.0
OPERATIONS - National Laboratories	1.6	1.6	0.0	0.0	0.0	0.0
OPERATIONS - Site Constructors	0.0	0.0	0.0	0.0	0.0	0.0
OPERATIONS - Architecture/Engineering Contractors	0.0	0.0	0.0	0.0	0.0	0.0
OPERATIONS - Construction Contractor	0.0	0.0	0.0	0.0	0.0	0.0
Worker Category Reddick FTE (FTE)						
Engineer/Management	2.9	2.9	0.0	0.0	0.0	0.0
Crafts	0.0	0.0	0.0	0.0	0.0	0.0
Maintenance	4.3	4.3	0.0	0.0	0.0	0.0
Operators	7.2	7.2	0.0	0.0	0.0	0.0
Infrastructure	2.3	2.3	0.0	0.0	0.0	0.0
Total	16.6	16.6	0.0	0.0	0.0	0.0

ALTERNATIVE 4 LLWV COST SUMMARY	FY07	FY08	FY09	FY10	FY11	FY12
Studies/Permitting	0	0	0	0	0	0
Design	0	0	0	0	0	0
Construction/D&D	0	0	0	0	0	0
Operation	13,791,000	13,736,000	10,682,100	10,626,000	10,555,600	10,434,600
Total	13,791,000	13,736,000	10,682,100	10,626,000	10,555,600	10,434,600

ALTERNATIVE 4 LLWV FTE SUMMARY	FY07	FY08	FY09	FY10	FY11	FY12
Engineer/Management	13.0	12.9	10.0	9.9	9.9	9.8
Crafts	0.0	0.0	0.0	0.0	0.0	0.0
Maintenance	19.5	19.4	15.0	14.9	14.8	14.7
Operators	32.4	32.3	25.0	24.9	24.7	24.4
Infrastructure	8.6	8.6	6.3	6.3	6.2	6.1
Total	73.5	73.2	56.3	56.0	55.6	55.0

ALTERNATIVE 4 LLWV REDDICK COST BREAKDOWN	FY13	FY14	FY15	FY16	FY17	FY18	FY19	FY20	FY21
Activity % of Alt 4 LLWV Reddick Costs (%)									
Studies/Permitting	0	0	0	0	0	0	0	0	0
Design	0	0	0	0	0	0	0	0	0
Construction/D&D	0	0	0	0	0	0	0	0	0
Operation	0	0	0	0	0	0	0	0	0
Total Percentage	0	0	0	0	0	0	0	0	0
Alt 4 LLWV Reddick Costs($)									
Studies/Permitting	0	0	0	0	0	0	0	0	0
Design	0	0	0	0	0	0	0	0	0
Construction/D&D	0	0	0	0	0	0	0	0	0
Operation	0	0	0	0	0	0	0	0	0
Total Cost	0	0	0	0	0	0	0	0	0

ALTERNATIVE 4 LLWV REDDICK FTE BREAKDOWN	FY13	FY14	FY15	FY16	FY17	FY18	FY19	FY20	FY21
Contractor FTE per Alt 4 LLWV Activity (FTE)									
STUDIES/PERMITTING - Site Management/Operations	0.0	0.0	0.0	0.0	0.0	0.0	0.0	0.0	0.0
STUDIES/PERMITTING - Site Infrastructure	0.0	0.0	0.0	0.0	0.0	0.0	0.0	0.0	0.0
STUDIES/PERMITTING - National Laboratories	0.0	0.0	0.0	0.0	0.0	0.0	0.0	0.0	0.0
STUDIES/PERMITTING - Site Constructors	0.0	0.0	0.0	0.0	0.0	0.0	0.0	0.0	0.0
STUDIES/PERMITTING - Architecture/Engineering Contract	0.0	0.0	0.0	0.0	0.0	0.0	0.0	0.0	0.0
STUDIES/PERMITTING - Construction Contractor	0.0	0.0	0.0	0.0	0.0	0.0	0.0	0.0	0.0
DESIGN - Site Management/Operations	0.0	0.0	0.0	0.0	0.0	0.0	0.0	0.0	0.0
DESIGN - Site Infrastructure	0.0	0.0	0.0	0.0	0.0	0.0	0.0	0.0	0.0
DESIGN - National Laboratories	0.0	0.0	0.0	0.0	0.0	0.0	0.0	0.0	0.0
DESIGN - Site Constructors	0.0	0.0	0.0	0.0	0.0	0.0	0.0	0.0	0.0
DESIGN - Architecture/Engineering Contractors	0.0	0.0	0.0	0.0	0.0	0.0	0.0	0.0	0.0
DESIGN - Construction Contractor	0.0	0.0	0.0	0.0	0.0	0.0	0.0	0.0	0.0
CONSTRUCTION/D&D - Site Management/Operations	0.0	0.0	0.0	0.0	0.0	0.0	0.0	0.0	0.0
CONSTRUCTION/D&D - Site Infrastructure	0.0	0.0	0.0	0.0	0.0	0.0	0.0	0.0	0.0
CONSTRUCTION/D&D - National Laboratories	0.0	0.0	0.0	0.0	0.0	0.0	0.0	0.0	0.0
CONSTRUCTION/D&D - Site Constructors	0.0	0.0	0.0	0.0	0.0	0.0	0.0	0.0	0.0
CONSTRUCTION/D&D - Architecture/Engineering Contracto	0.0	0.0	0.0	0.0	0.0	0.0	0.0	0.0	0.0
CONSTRUCTION/D&D - Construction Contractor	0.0	0.0	0.0	0.0	0.0	0.0	0.0	0.0	0.0
OPERATIONS - Site Management/Operations	0.0	0.0	0.0	0.0	0.0	0.0	0.0	0.0	0.0
OPERATIONS - Site Infrastructure	0.0	0.0	0.0	0.0	0.0	0.0	0.0	0.0	0.0
OPERATIONS - National Laboratories	0.0	0.0	0.0	0.0	0.0	0.0	0.0	0.0	0.0
OPERATIONS - Site Constructors	0.0	0.0	0.0	0.0	0.0	0.0	0.0	0.0	0.0
OPERATIONS - Architecture/Engineering Contractors	0.0	0.0	0.0	0.0	0.0	0.0	0.0	0.0	0.0
OPERATIONS - Construction Contractor	0.0	0.0	0.0	0.0	0.0	0.0	0.0	0.0	0.0
Worker Category Reddick FTE (FTE)									
Engineer/Management	0.0	0.0	0.0	0.0	0.0	0.0	0.0	0.0	0.0
Crafts	0.0	0.0	0.0	0.0	0.0	0.0	0.0	0.0	0.0
Maintenance	0.0	0.0	0.0	0.0	0.0	0.0	0.0	0.0	0.0
Operators	0.0	0.0	0.0	0.0	0.0	0.0	0.0	0.0	0.0
Infrastructure	0.0	0.0	0.0	0.0	0.0	0.0	0.0	0.0	0.0
Total	0.0	0.0	0.0	0.0	0.0	0.0	0.0	0.0	0.0

ALTERNATIVE 4 LLWV COST SUMMARY	FY13	FY14	FY15	FY16	FY17	FY18	FY19	FY20	FY21
Studies/Permitting	0	0	0	0	0	0	0	0	0
Design	0	0	0	0	0	0	0	0	0
Construction/D&D	0	0	0	0	0	0	0	0	0
Operation	10,369,700	4,103,000	117,700	96,800	33,000	0	0	0	0
Total	10,369,700	4,103,000	117,700	96,800	33,000	0	0	0	0

ALTERNATIVE 4 LLWV FTE SUMMARY	FY13	FY14	FY15	FY16	FY17	FY18	FY19	FY20	FY21
Engineer/Management	9.7	3.8	0.1	0.1	0.0	0.0	0.0	0.0	0.0
Crafts	0.0	0.0	0.0	0.0	0.0	0.0	0.0	0.0	0.0
Maintenance	14.6	5.8	0.2	0.1	0.0	0.0	0.0	0.0	0.0
Operators	24.3	9.6	0.3	0.2	0.1	0.0	0.0	0.0	0.0
Infrastructure	6.1	2.4	0.1	0.1	0.0	0.0	0.0	0.0	0.0
Total	54.6	21.6	0.6	0.5	0.2	0.0	0.0	0.0	0.0

ALTERNATIVE 4 LLWV REDDICK COST BREAKDOWN	FY22	FY23	FY24	FY25	FY26	FY27	FY28	FY29	FY30	FY31	FY32
Activity % of Alt 4 LLWV Reddick Costs (%)											
Studies/Permitting	0	0	0	0	0	0	0	0	0	0	0
Design	0	0	0	0	0	0	0	0	0	0	0
Construction/D&D	0	0	0	0	0	0	0	0	0	0	0
Operation	0	0	0	0	0	0	0	0	0	0	0
Total Percentage	0	0	0	0	0	0	0	0	0	0	0
Alt 4 LLWV Reddick Costs($)											
Studies/Permitting	0	0	0	0	0	0	0	0	0	0	0
Design	0	0	0	0	0	0	0	0	0	0	0
Construction/D&D	0	0	0	0	0	0	0	0	0	0	0
Operation	0	0	0	0	0	0	0	0	0	0	0
Total Cost	0	0	0	0	0	0	0	0	0	0	0

ALTERNATIVE 4 LLWV REDDICK FTE BREAKDOWN	FY22	FY23	FY24	FY25	FY26	FY27	FY28	FY29	FY30	FY31	FY32
Contractor FTE per Alt 4 LLWV Activity (FTE)											
STUDIES/PERMITTING - Site Management/Operations	0.0	0.0	0.0	0.0	0.0	0.0	0.0	0.0	0.0	0.0	0.0
STUDIES/PERMITTING - Site Infrastructure	0.0	0.0	0.0	0.0	0.0	0.0	0.0	0.0	0.0	0.0	0.0
STUDIES/PERMITTING - National Laboratories	0.0	0.0	0.0	0.0	0.0	0.0	0.0	0.0	0.0	0.0	0.0
STUDIES/PERMITTING - Site Constructors	0.0	0.0	0.0	0.0	0.0	0.0	0.0	0.0	0.0	0.0	0.0
STUDIES/PERMITTING - Architecture/Engineering Contract	0.0	0.0	0.0	0.0	0.0	0.0	0.0	0.0	0.0	0.0	0.0
STUDIES/PERMITTING - Construction Contractor	0.0	0.0	0.0	0.0	0.0	0.0	0.0	0.0	0.0	0.0	0.0
DESIGN - Site Management/Operations	0.0	0.0	0.0	0.0	0.0	0.0	0.0	0.0	0.0	0.0	0.0
DESIGN - Site Infrastructure	0.0	0.0	0.0	0.0	0.0	0.0	0.0	0.0	0.0	0.0	0.0
DESIGN - National Laboratories	0.0	0.0	0.0	0.0	0.0	0.0	0.0	0.0	0.0	0.0	0.0
DESIGN - Site Constructors	0.0	0.0	0.0	0.0	0.0	0.0	0.0	0.0	0.0	0.0	0.0
DESIGN - Architecture/Engineering Contractors	0.0	0.0	0.0	0.0	0.0	0.0	0.0	0.0	0.0	0.0	0.0
DESIGN - Construction Contractor	0.0	0.0	0.0	0.0	0.0	0.0	0.0	0.0	0.0	0.0	0.0
CONSTRUCTION/D&D - Site Management/Operations	0.0	0.0	0.0	0.0	0.0	0.0	0.0	0.0	0.0	0.0	0.0
CONSTRUCTION/D&D - Site Infrastructure	0.0	0.0	0.0	0.0	0.0	0.0	0.0	0.0	0.0	0.0	0.0
CONSTRUCTION/D&D - National Laboratories	0.0	0.0	0.0	0.0	0.0	0.0	0.0	0.0	0.0	0.0	0.0
CONSTRUCTION/D&D - Site Constructors	0.0	0.0	0.0	0.0	0.0	0.0	0.0	0.0	0.0	0.0	0.0
CONSTRUCTION/D&D - Architecture/Engineering Contracto	0.0	0.0	0.0	0.0	0.0	0.0	0.0	0.0	0.0	0.0	0.0
CONSTRUCTION/D&D - Construction Contractor	0.0	0.0	0.0	0.0	0.0	0.0	0.0	0.0	0.0	0.0	0.0
OPERATIONS - Site Management/Operations	0.0	0.0	0.0	0.0	0.0	0.0	0.0	0.0	0.0	0.0	0.0
OPERATIONS - Site Infrastructure	0.0	0.0	0.0	0.0	0.0	0.0	0.0	0.0	0.0	0.0	0.0
OPERATIONS - National Laboratories	0.0	0.0	0.0	0.0	0.0	0.0	0.0	0.0	0.0	0.0	0.0
OPERATIONS - Site Constructors	0.0	0.0	0.0	0.0	0.0	0.0	0.0	0.0	0.0	0.0	0.0
OPERATIONS - Architecture/Engineering Contractors	0.0	0.0	0.0	0.0	0.0	0.0	0.0	0.0	0.0	0.0	0.0
OPERATIONS - Construction Contractor	0.0	0.0	0.0	0.0	0.0	0.0	0.0	0.0	0.0	0.0	0.0
Worker Category Reddick FTE (FTE)											
Engineer/Management	0.0	0.0	0.0	0.0	0.0	0.0	0.0	0.0	0.0	0.0	0.0
Crafts	0.0	0.0	0.0	0.0	0.0	0.0	0.0	0.0	0.0	0.0	0.0
Maintenance	0.0	0.0	0.0	0.0	0.0	0.0	0.0	0.0	0.0	0.0	0.0
Operators	0.0	0.0	0.0	0.0	0.0	0.0	0.0	0.0	0.0	0.0	0.0
Infrastructure	0.0	0.0	0.0	0.0	0.0	0.0	0.0	0.0	0.0	0.0	0.0
Total	0.0	0.0	0.0	0.0	0.0	0.0	0.0	0.0	0.0	0.0	0.0

ALTERNATIVE 4 LLWV COST SUMMARY	FY22	FY23	FY24	FY25	FY26	FY27	FY28	FY29	FY30	FY31	FY32
Studies/Permitting	0	0	0	0	0	0	0	0	0	0	0
Design	0	0	0	0	0	0	0	0	0	0	0
Construction/D&D	0	0	0	0	0	0	0	0	0	0	0
Operation	0	0	0	0	0	0	0	0	0	0	0
Total	0	0	0	0	0	0	0	0	0	0	0

ALTERNATIVE 4 LLWV FTE SUMMARY	FY22	FY23	FY24	FY25	FY26	FY27	FY28	FY29	FY30	FY31	FY32
Engineer/Management	0.0	0.0	0.0	0.0	0.0	0.0	0.0	0.0	0.0	0.0	0.0
Crafts	0.0	0.0	0.0	0.0	0.0	0.0	0.0	0.0	0.0	0.0	0.0
Maintenance	0.0	0.0	0.0	0.0	0.0	0.0	0.0	0.0	0.0	0.0	0.0
Operators	0.0	0.0	0.0	0.0	0.0	0.0	0.0	0.0	0.0	0.0	0.0
Infrastructure	0.0	0.0	0.0	0.0	0.0	0.0	0.0	0.0	0.0	0.0	0.0
Total	0.0	0.0	0.0	0.0	0.0	0.0	0.0	0.0	0.0	0.0	0.0

ALTERNATIVE 4 LLWV REDDICK COST BREAKDOWN	FY33	FY34	FY35	FY36	FY37	FY38	FY39	FY40	
Activity % of Alt 4 LLWV Reddick Costs (%)									
Studies/Permitting	0	0	0	0	0	0	0	0	
Design	0	0	0	0	0	0	0	0	
Construction/D&D	0	0	0	0	0	0	0	0	
Operation	0	0	0	0	0	0	0	0	
Total Percentage	0	0	0	0	0	0	0	0	
Alt 4 LLWV Reddick Costs($)									**Totals**
Studies/Permitting	0	0	0	0	0	0	0	0	1,500,000
Design	0	0	0	0	0	0	0	0	8,700,000
Construction/D&D	0	0	0	0	0	0	0	0	34,500,000
Operation	0	0	0	0	0	0	0	0	15,000,000
Total Cost	0	0	0	0	0	0	0	0	59,700,000

ALTERNATIVE 4 LLWV REDDICK FTE BREAKDOWN	FY33	FY34	FY35	FY36	FY37	FY38	FY39	FY40	Totals
Contractor FTE per Alt 4 LLWV Activity (FTE)									
STUDIES/PERMITTING - Site Management/Operations	0.0	0.0	0.0	0.0	0.0	0.0	0.0	0.0	8.7
STUDIES/PERMITTING - Site Infrastructure	0.0	0.0	0.0	0.0	0.0	0.0	0.0	0.0	1.5
STUDIES/PERMITTING - National Laboratories	0.0	0.0	0.0	0.0	0.0	0.0	0.0	0.0	0.4
STUDIES/PERMITTING - Site Constructors	0.0	0.0	0.0	0.0	0.0	0.0	0.0	0.0	0.0
STUDIES/PERMITTING - Architecture/Engineering Contract	0.0	0.0	0.0	0.0	0.0	0.0	0.0	0.0	0.0
STUDIES/PERMITTING - Construction Contractor	0.0	0.0	0.0	0.0	0.0	0.0	0.0	0.0	0.0
DESIGN - Site Management/Operations	0.0	0.0	0.0	0.0	0.0	0.0	0.0	0.0	5.3
DESIGN - Site Infrastructure	0.0	0.0	0.0	0.0	0.0	0.0	0.0	0.0	0.9
DESIGN - National Laboratories	0.0	0.0	0.0	0.0	0.0	0.0	0.0	0.0	4.7
DESIGN - Site Constructors	0.0	0.0	0.0	0.0	0.0	0.0	0.0	0.0	3.1
DESIGN - Architecture/Engineering Contractors	0.0	0.0	0.0	0.0	0.0	0.0	0.0	0.0	36.3
DESIGN - Construction Contractor	0.0	0.0	0.0	0.0	0.0	0.0	0.0	0.0	0.0
CONSTRUCTION/D&D - Site Management/Operations	0.0	0.0	0.0	0.0	0.0	0.0	0.0	0.0	20.9
CONSTRUCTION/D&D - Site Infrastructure	0.0	0.0	0.0	0.0	0.0	0.0	0.0	0.0	3.7
CONSTRUCTION/D&D - National Laboratories	0.0	0.0	0.0	0.0	0.0	0.0	0.0	0.0	0.0
CONSTRUCTION/D&D - Site Constructors	0.0	0.0	0.0	0.0	0.0	0.0	0.0	0.0	12.3
CONSTRUCTION/D&D - Architecture/Engineering Contracto	0.0	0.0	0.0	0.0	0.0	0.0	0.0	0.0	9.6
CONSTRUCTION/D&D - Construction Contractor	0.0	0.0	0.0	0.0	0.0	0.0	0.0	0.0	202.9
OPERATIONS - Site Management/Operations	0.0	0.0	0.0	0.0	0.0	0.0	0.0	0.0	63.8
OPERATIONS - Site Infrastructure	0.0	0.0	0.0	0.0	0.0	0.0	0.0	0.0	11.3
OPERATIONS - National Laboratories	0.0	0.0	0.0	0.0	0.0	0.0	0.0	0.0	8.0
OPERATIONS - Site Constructors	0.0	0.0	0.0	0.0	0.0	0.0	0.0	0.0	0.0
OPERATIONS - Architecture/Engineering Contractors	0.0	0.0	0.0	0.0	0.0	0.0	0.0	0.0	0.0
OPERATIONS - Construction Contractor	0.0	0.0	0.0	0.0	0.0	0.0	0.0	0.0	0.0
Worker Category Reddick FTE (FTE)									
Engineer/Management	0.0	0.0	0.0	0.0	0.0	0.0	0.0	0.0	153.7
Crafts	0.0	0.0	0.0	0.0	0.0	0.0	0.0	0.0	164.8
Maintenance	0.0	0.0	0.0	0.0	0.0	0.0	0.0	0.0	21.5
Operators	0.0	0.0	0.0	0.0	0.0	0.0	0.0	0.0	35.9
Infrastructure	0.0	0.0	0.0	0.0	0.0	0.0	0.0	0.0	17.4
Total	0.0	0.0	0.0	0.0	0.0	0.0	0.0	0.0	393.4

ALTERNATIVE 4 LLWV COST SUMMARY	FY33	FY34	FY35	FY36	FY37	FY38	FY39	FY40	Totals
Studies/Permitting	0	0	0	0	0	0	0	0	47,381,605
Design	0	0	0	0	0	0	0	0	8,700,000
Construction/D&D	0	0	0	0	0	0	0	0	44,986,025
Operation	0	0	0	0	0	0	0	0	380,658,370
Total	0	0	0	0	0	0	0	0	481,726,000

ALTERNATIVE 4 LLWV FTE SUMMARY	FY33	FY34	FY35	FY36	FY37	FY38	FY39	FY40	Totals
Engineer/Management	0.0	0.0	0.0	0.0	0.0	0.0	0.0	0.0	790.7
Crafts	0.0	0.0	0.0	0.0	0.0	0.0	0.0	0.0	214.9
Maintenance	0.0	0.0	0.0	0.0	0.0	0.0	0.0	0.0	535.0
Operators	0.0	0.0	0.0	0.0	0.0	0.0	0.0	0.0	891.7
Infrastructure	0.0	0.0	0.0	0.0	0.0	0.0	0.0	0.0	270.3
Total	0.0	0.0	0.0	0.0	0.0	0.0	0.0	0.0	2,702.7

FUNCTION - ALTERNATIVE 4 HLWV	FY95	FY96	FY97	FY98	FY99	FY00
Technology Development (Test) Cost	13,582,327	17,101,894	15,321,558	1,124,209	0	0
Perform HLW Hot Operations First Year (Hot Test)	0	0	0	0	0	0
Perform HLW Cold Operations	0	0	0	0	0	0
Subtotal Test Costs	13,582,327	17,101,894	15,321,558	1,124,209	0	0
Test Oversight Costs	0	0	0	0	0	0
Total HLWV Base Costs	**13,582,327**	**17,101,894**	**15,321,558**	**1,124,209**	**0**	**0**
Total Alt 4 Reddick Costs	1,000,000	1,000,000	3,000,000	5,000,000	12,000,000	12,000,000
LLWV % of Total Alt 4 Reddick Costs	*30*	*30*	*30*	*30*	*30*	*30*
Alt 4 LLWV Reddick Costs	**300,000**	**300,000**	**900,000**	**1,500,000**	**3,600,000**	**3,600,000**
Alternative 4 HLWV Actual Costs ($)	**13,882,327**	**17,401,894**	**16,221,558**	**2,624,209**	**3,600,000**	**3,600,000**

ALTERNATIVE 4 HLWV BASE COST BREAKDOWN	FY95	FY96	FY97	FY98	FY99	FY00
Activity % of Alternative 4 HLWV Base Costs (%)						
Studies/Permitting	45	45	40	25	0	0
Design	5	5	0	0	0	0
Construction/D&D	10	10	10	5	0	0
Operation	40	40	50	70	0	0
Total Percentage	**100**	**100**	**100**	**100**	**0**	**0**
Alternative 4 HLWV Base Costs($)						
Studies/Permitting	6,112,047	7,695,852	6,128,623	281,052	0	0
Design	679,116	855,095	0	0	0	0
Construction/D&D	1,358,233	1,710,189	1,532,156	56,210	0	0
Operation	5,432,931	6,840,758	7,660,779	786,946	0	0
Total Cost	**13,582,327**	**17,101,894**	**15,321,558**	**1,124,209**	**0**	**0**

ALTERNATIVE 4 HLWV BASE FTE BREAKDOWN	FY95	FY96	FY97	FY98	FY99	FY00
Contractor FTE per Alternative 4 HLWV Activity (FTE)						
STUDIES/PERMITTING - Site Management/Operations	27.8	35.0	27.9	1.3	0.0	0.0
STUDIES/PERMITTING - Site Infrastructure	4.9	6.2	4.9	0.2	0.0	0.0
STUDIES/PERMITTING - National Laboratories	8.2	10.3	8.2	0.4	0.0	0.0
STUDIES/PERMITTING - Site Constructors	0.0	0.0	0.0	0.0	0.0	0.0
STUDIES/PERMITTING - Architecture/Engineering Contract	0.0	0.0	0.0	0.0	0.0	0.0
STUDIES/PERMITTING - Construction Contractor	0.0	0.0	0.0	0.0	0.0	0.0
DESIGN - Site Management/Operations	0.4	0.5	0.0	0.0	0.0	0.0
DESIGN - Site Infrastructure	0.1	0.1	0.0	0.0	0.0	0.0
DESIGN - National Laboratories	0.4	0.5	0.0	0.0	0.0	0.0
DESIGN - Site Constructors	0.2	0.3	0.0	0.0	0.0	0.0
DESIGN - Architecture/Engineering Contractors	2.8	3.6	0.0	0.0	0.0	0.0
DESIGN - Construction Contractor	0.0	0.0	0.0	0.0	0.0	0.0
CONSTRUCTION/D&D - Site Management/Operations	0.4	0.5	0.5	0.0	0.0	0.0
CONSTRUCTION/D&D - Site Infrastructure	0.1	0.1	0.1	0.0	0.0	0.0
CONSTRUCTION/D&D - National Laboratories	0.4	0.5	0.4	0.0	0.0	0.0
CONSTRUCTION/D&D - Site Constructors	0.5	0.6	0.5	0.0	0.0	0.0
CONSTRUCTION/D&D - Architecture/Engineering Contracto	0.4	0.5	0.4	0.0	0.0	0.0
CONSTRUCTION/D&D - Construction Contractor	8.0	10.1	9.0	0.3	0.0	0.0
OPERATIONS - Site Management/Operations	18.1	22.8	25.6	2.6	0.0	0.0
OPERATIONS - Site Infrastructure	3.2	4.0	4.5	0.5	0.0	0.0
OPERATIONS - National Laboratories	7.3	9.2	10.3	1.1	0.0	0.0
OPERATIONS - Site Constructors	0.0	0.0	0.0	0.0	0.0	0.0
OPERATIONS - Architecture/Engineering Contractors	0.0	0.0	0.0	0.0	0.0	0.0
OPERATIONS - Construction Contractor	0.0	0.0	0.0	0.0	0.0	0.0

Worker Category Base FTE (FTE)	FY95	FY96	FY97	FY98	FY99	FY00
Engineer/Management	48.1	60.6	46.8	2.5	0.0	0.0
Crafts	6.5	8.2	7.3	0.3	0.0	0.0
Maintenance	7.6	9.6	10.8	1.1	0.0	0.0
Operators	12.7	16.0	17.9	1.8	0.0	0.0
Infrastructure	8.3	10.4	9.5	0.7	0.0	0.0
Total	**83.2**	**104.8**	**92.4**	**6.4**	**0.0**	**0.0**

FUNCTION - ALTERNATIVE 4 HLWV	FY01	FY02	FY03	FY04	FY05	FY06
Technology Development (Test) Cost	0	0	0	0	0	0
Perform HLW Hot Operations First Year (Hot Test)	0	0	0	0	0	0
Perform HLW Cold Operations	0	0	0	857,272	16,282,120	36,334,800
Subtotal Test Costs	0	0	0	857,272	16,282,120	36,334,800
Test Oversight Costs	0	0	0	0	0	0
Total HLWV Base Costs	**0**	**0**	**0**	**857,272**	**16,282,120**	**36,334,800**
Total Alt 4 Reddick Costs	30,000,000	40,000,000	45,000,000	10,000,000	10,000,000	10,000,000
LLWV % of Total Alt 4 Reddick Costs	*30*	*30*	*30*	*30*	*30*	*30*
Alt 4 LLWV Reddick Costs	**9,000,000**	**12,000,000**	**13,500,000**	**3,000,000**	**3,000,000**	**3,000,000**
Alternative 4 HLWV Actual Costs ($)	**9,000,000**	**12,000,000**	**13,500,000**	**3,857,272**	**19,282,120**	**39,334,800**

ALTERNATIVE 4 HLWV BASE COST BREAKDOWN	FY01	FY02	FY03	FY04	FY05	FY06
Activity % of Alternative 4 HLWV Base Costs (%)						
Studies/Permitting	0	0	0	0	0	0
Design	0	0	0	0	0	0
Construction/D&D	0	0	0	0	0	0
Operation	0	0	0	100	100	100
Total Percentage	**0**	**0**	**0**	**100**	**100**	**100**
Alternative 4 HLWV Base Costs($)						
Studies/Permitting	0	0	0	0	0	0
Design	0	0	0	0	0	0
Construction/D&D	0	0	0	0	0	0
Operation	0	0	0	857,272	16,282,120	36,334,800
Total Cost	**0**	**0**	**0**	**857,272**	**16,282,120**	**36,334,800**

ALTERNATIVE 4 HLWV BASE FTE BREAKDOWN	FY01	FY02	FY03	FY04	FY05	FY06
Contractor FTE per Alternative 4 HLWV Activity (FTE)						
STUDIES/PERMITTING - Site Management/Operations	0.0	0.0	0.0	0.0	0.0	0.0
STUDIES/PERMITTING - Site Infrastructure	0.0	0.0	0.0	0.0	0.0	0.0
STUDIES/PERMITTING - National Laboratories	0.0	0.0	0.0	0.0	0.0	0.0
STUDIES/PERMITTING - Site Constructors	0.0	0.0	0.0	0.0	0.0	0.0
STUDIES/PERMITTING - Architecture/Engineering Contract	0.0	0.0	0.0	0.0	0.0	0.0
STUDIES/PERMITTING - Construction Contractor	0.0	0.0	0.0	0.0	0.0	0.0
DESIGN - Site Management/Operations	0.0	0.0	0.0	0.0	0.0	0.0
DESIGN - Site Infrastructure	0.0	0.0	0.0	0.0	0.0	0.0
DESIGN - National Laboratories	0.0	0.0	0.0	0.0	0.0	0.0
DESIGN - Site Constructors	0.0	0.0	0.0	0.0	0.0	0.0
DESIGN - Architecture/Engineering Contractors	0.0	0.0	0.0	0.0	0.0	0.0
DESIGN - Construction Contractor	0.0	0.0	0.0	0.0	0.0	0.0
CONSTRUCTION/D&D - Site Management/Operations	0.0	0.0	0.0	0.0	0.0	0.0
CONSTRUCTION/D&D - Site Infrastructure	0.0	0.0	0.0	0.0	0.0	0.0
CONSTRUCTION/D&D - National Laboratories	0.0	0.0	0.0	0.0	0.0	0.0
CONSTRUCTION/D&D - Site Constructors	0.0	0.0	0.0	0.0	0.0	0.0
CONSTRUCTION/D&D - Architecture/Engineering Contracto	0.0	0.0	0.0	0.0	0.0	0.0
CONSTRUCTION/D&D - Construction Contractor	0.0	0.0	0.0	0.0	0.0	0.0
OPERATIONS - Site Management/Operations	0.0	0.0	0.0	2.9	54.4	121.3
OPERATIONS - Site Infrastructure	0.0	0.0	0.0	0.5	9.6	21.4
OPERATIONS - National Laboratories	0.0	0.0	0.0	1.2	21.8	48.7
OPERATIONS - Site Constructors	0.0	0.0	0.0	0.0	0.0	0.0
OPERATIONS - Architecture/Engineering Contractors	0.0	0.0	0.0	0.0	0.0	0.0
OPERATIONS - Construction Contractor	0.0	0.0	0.0	0.0	0.0	0.0

Worker Category Base FTE (FTE)	FY01	FY02	FY03	FY04	FY05	FY06
Engineer/Management	0.0	0.0	0.0	0.8	15.2	34.0
Crafts	0.0	0.0	0.0	0.0	0.0	0.0
Maintenance	0.0	0.0	0.0	1.2	22.9	51.0
Operators	0.0	0.0	0.0	2.0	38.1	85.0
Infrastructure	0.0	0.0	0.0	0.5	9.6	21.4
Total	**0.0**	**0.0**	**0.0**	**4.5**	**85.8**	**191.5**

FUNCTION - ALTERNATIVE 4 HLWV	FY07	FY08	FY09	FY10	FY11	FY12
Technology Development (Test) Cost	0	0	0	0	0	0
Perform HLW Hot Operations First Year (Hot Test)	0	0	0	219,742,768	0	0
Perform HLW Cold Operations	58,298,612	78,584,160	6,753,131	0	0	0
Subtotal Test Costs	58,298,612	78,584,160	6,753,131	219,742,768	0	0
Test Oversight Costs	0	0	0	0	0	0
Total HLWV Base Costs	**58,298,612**	**78,584,160**	**6,753,131**	**219,742,768**	**0**	**0**
Total Alt 4 Reddick Costs	10,000,000	10,000,000	0	0		
LLWV % of Total Alt 4 Reddick Costs	*30*	*30*	*0*	*0*		
Alt 4 LLWV Reddick Costs	**3,000,000**	**3,000,000**	**0**	**0**	**0**	**0**
Alternative 4 HLWV Actual Costs ($)	**61,298,612**	**81,584,160**	**6,753,131**	**219,742,768**	**0**	**0**

ALTERNATIVE 4 HLWV BASE COST BREAKDOWN	FY07	FY08	FY09	FY10	FY11	FY12
Activity % of Alternative 4 HLWV Base Costs (%)						
Studies/Permitting	0	0	0	0	0	0
Design	0	0	0	0	0	0
Construction/D&D	0	0	0	0	0	0
Operation	100	100	100	100	0	0
Total Percentage	**100**	**100**	**100**	**100**	**0**	**0**
Alternative 4 HLWV Base Costs($)						
Studies/Permitting	0	0	0	0	0	0
Design	0	0	0	0	0	0
Construction/D&D	0	0	0	0	0	0
Operation	58,298,612	78,584,160	6,753,131	219,742,768	0	0
Total Cost	**58,298,612**	**78,584,160**	**6,753,131**	**219,742,768**	**0**	**0**

ALTERNATIVE 4 HLWV BASE FTE BREAKDOWN	FY07	FY08	FY09	FY10	FY11	FY12
Contractor FTE per Alternative 4 HLWV Activity (FTE)						
STUDIES/PERMITTING - Site Management/Operations	0.0	0.0	0.0	0.0	0.0	0.0
STUDIES/PERMITTING - Site Infrastructure	0.0	0.0	0.0	0.0	0.0	0.0
STUDIES/PERMITTING - National Laboratories	0.0	0.0	0.0	0.0	0.0	0.0
STUDIES/PERMITTING - Site Constructors	0.0	0.0	0.0	0.0	0.0	0.0
STUDIES/PERMITTING - Architecture/Engineering Contract	0.0	0.0	0.0	0.0	0.0	0.0
STUDIES/PERMITTING - Construction Contractor	0.0	0.0	0.0	0.0	0.0	0.0
DESIGN - Site Management/Operations	0.0	0.0	0.0	0.0	0.0	0.0
DESIGN - Site Infrastructure	0.0	0.0	0.0	0.0	0.0	0.0
DESIGN - National Laboratories	0.0	0.0	0.0	0.0	0.0	0.0
DESIGN - Site Constructors	0.0	0.0	0.0	0.0	0.0	0.0
DESIGN - Architecture/Engineering Contractors	0.0	0.0	0.0	0.0	0.0	0.0
DESIGN - Construction Contractor	0.0	0.0	0.0	0.0	0.0	0.0
CONSTRUCTION/D&D - Site Management/Operations	0.0	0.0	0.0	0.0	0.0	0.0
CONSTRUCTION/D&D - Site Infrastructure	0.0	0.0	0.0	0.0	0.0	0.0
CONSTRUCTION/D&D - National Laboratories	0.0	0.0	0.0	0.0	0.0	0.0
CONSTRUCTION/D&D - Site Constructors	0.0	0.0	0.0	0.0	0.0	0.0
CONSTRUCTION/D&D - Architecture/Engineering Contracto	0.0	0.0	0.0	0.0	0.0	0.0
CONSTRUCTION/D&D - Construction Contractor	0.0	0.0	0.0	0.0	0.0	0.0
OPERATIONS - Site Management/Operations	194.7	262.4	22.6	733.8	0.0	0.0
OPERATIONS - Site Infrastructure	34.4	46.3	4.0	129.5	0.0	0.0
OPERATIONS - National Laboratories	78.2	105.4	9.1	294.8	0.0	0.0
OPERATIONS - Site Constructors	0.0	0.0	0.0	0.0	0.0	0.0
OPERATIONS - Architecture/Engineering Contractors	0.0	0.0	0.0	0.0	0.0	0.0
OPERATIONS - Construction Contractor	0.0	0.0	0.0	0.0	0.0	0.0

Worker Category Base FTE (FTE)	FY07	FY08	FY09	FY10	FY11	FY12
Engineer/Management	54.6	73.6	6.3	205.7	0.0	0.0
Crafts	0.0	0.0	0.0	0.0	0.0	0.0
Maintenance	81.9	110.4	9.5	308.6	0.0	0.0
Operators	136.4	183.9	15.8	514.3	0.0	0.0
Infrastructure	34.4	46.3	4.0	129.5	0.0	0.0
Total	**307.2**	**414.1**	**35.6**	**1,158.1**	**0.0**	**0.0**

FUNCTION - ALTERNATIVE 4 HLWV	FY13	FY14	FY15	FY16	FY17	FY18	FY19	FY20	FY21
Technology Development (Test) Cost	0	0	0	0	0	0	0	0	0
Perform HLW Hot Operations First Year (Hot Test)	0	0	0	0	0	0	0	0	0
Perform HLW Cold Operations	0	0	0	0	0	0	0	0	0
Subtotal Test Costs	0	0	0	0	0	0	0	0	0
Test Oversight Costs	0	0	0	0	0	0	0	0	0
Total HLWV Base Costs	0	0	0	0	0	0	0	0	0
Total Alt 4 Reddick Costs									
LLWV % of Total Alt 4 Reddick Costs									
Alt 4 LLWV Reddick Costs	0	0	0	0	0	0	0	0	0
Alternative 4 HLWV Actual Costs ($)	0	0	0	0	0	0	0	0	0

ALTERNATIVE 4 HLWV BASE COST BREAKDOWN	FY13	FY14	FY15	FY16	FY17	FY18	FY19	FY20	FY21
Activity % of Alternative 4 HLWV Base Costs (%)									
Studies/Permitting	0	0	0	0	0	0	0	0	0
Design	0	0	0	0	0	0	0	0	0
Construction/D&D	0	0	0	0	0	0	0	0	0
Operation	0	0	0	0	0	0	0	0	0
Total Percentage	0	0	0	0	0	0	0	0	0
Alternative 4 HLWV Base Costs($)									
Studies/Permitting	0	0	0	0	0	0	0	0	0
Design	0	0	0	0	0	0	0	0	0
Construction/D&D	0	0	0	0	0	0	0	0	0
Operation	0	0	0	0	0	0	0	0	0
Total Cost	0	0	0	0	0	0	0	0	0

ALTERNATIVE 4 HLWV BASE FTE BREAKDOWN	FY13	FY14	FY15	FY16	FY17	FY18	FY19	FY20	FY21
Contractor FTE per Alternative 4 HLWV Activity (FTE)									
STUDIES/PERMITTING - Site Management/Operations	0.0	0.0	0.0	0.0	0.0	0.0	0.0	0.0	0.0
STUDIES/PERMITTING - Site Infrastructure	0.0	0.0	0.0	0.0	0.0	0.0	0.0	0.0	0.0
STUDIES/PERMITTING - National Laboratories	0.0	0.0	0.0	0.0	0.0	0.0	0.0	0.0	0.0
STUDIES/PERMITTING - Site Constructors	0.0	0.0	0.0	0.0	0.0	0.0	0.0	0.0	0.0
STUDIES/PERMITTING - Architecture/Engineering Contract	0.0	0.0	0.0	0.0	0.0	0.0	0.0	0.0	0.0
STUDIES/PERMITTING - Construction Contractor	0.0	0.0	0.0	0.0	0.0	0.0	0.0	0.0	0.0
DESIGN - Site Management/Operations	0.0	0.0	0.0	0.0	0.0	0.0	0.0	0.0	0.0
DESIGN - Site Infrastructure	0.0	0.0	0.0	0.0	0.0	0.0	0.0	0.0	0.0
DESIGN - National Laboratories	0.0	0.0	0.0	0.0	0.0	0.0	0.0	0.0	0.0
DESIGN - Site Constructors	0.0	0.0	0.0	0.0	0.0	0.0	0.0	0.0	0.0
DESIGN - Architecture/Engineering Contractors	0.0	0.0	0.0	0.0	0.0	0.0	0.0	0.0	0.0
DESIGN - Construction Contractor	0.0	0.0	0.0	0.0	0.0	0.0	0.0	0.0	0.0
CONSTRUCTION/D&D - Site Management/Operations	0.0	0.0	0.0	0.0	0.0	0.0	0.0	0.0	0.0
CONSTRUCTION/D&D - Site Infrastructure	0.0	0.0	0.0	0.0	0.0	0.0	0.0	0.0	0.0
CONSTRUCTION/D&D - National Laboratories	0.0	0.0	0.0	0.0	0.0	0.0	0.0	0.0	0.0
CONSTRUCTION/D&D - Site Constructors	0.0	0.0	0.0	0.0	0.0	0.0	0.0	0.0	0.0
CONSTRUCTION/D&D - Architecture/Engineering Contracto	0.0	0.0	0.0	0.0	0.0	0.0	0.0	0.0	0.0
CONSTRUCTION/D&D - Construction Contractor	0.0	0.0	0.0	0.0	0.0	0.0	0.0	0.0	0.0
OPERATIONS - Site Management/Operations	0.0	0.0	0.0	0.0	0.0	0.0	0.0	0.0	0.0
OPERATIONS - Site Infrastructure	0.0	0.0	0.0	0.0	0.0	0.0	0.0	0.0	0.0
OPERATIONS - National Laboratories	0.0	0.0	0.0	0.0	0.0	0.0	0.0	0.0	0.0
OPERATIONS - Site Constructors	0.0	0.0	0.0	0.0	0.0	0.0	0.0	0.0	0.0
OPERATIONS - Architecture/Engineering Contractors	0.0	0.0	0.0	0.0	0.0	0.0	0.0	0.0	0.0
OPERATIONS - Construction Contractor	0.0	0.0	0.0	0.0	0.0	0.0	0.0	0.0	0.0

Worker Category Base FTE (FTE)	FY13	FY14	FY15	FY16	FY17	FY18	FY19	FY20	FY21
Engineer/Management	0.0	0.0	0.0	0.0	0.0	0.0	0.0	0.0	0.0
Crafts	0.0	0.0	0.0	0.0	0.0	0.0	0.0	0.0	0.0
Maintenance	0.0	0.0	0.0	0.0	0.0	0.0	0.0	0.0	0.0
Operators	0.0	0.0	0.0	0.0	0.0	0.0	0.0	0.0	0.0
Infrastructure	0.0	0.0	0.0	0.0	0.0	0.0	0.0	0.0	0.0
Total	0.0	0.0	0.0	0.0	0.0	0.0	0.0	0.0	0.0

FUNCTION - ALTERNATIVE 4 HLWV	FY22	FY23	FY24	FY25	FY26	FY27	FY28	FY29	FY30	FY31	FY32
Technology Development (Test) Cost	0	0	0	0	0	0	0	0	0	0	0
Perform HLW Hot Operations First Year (Hot Test)	0	0	0	0	0	0	0	0	0	0	0
Perform HLW Cold Operations	0	0	0	0	0	0	0	0	0	0	0
Subtotal Test Costs	0	0	0	0	0	0	0	0	0	0	0
Test Oversight Costs	0	0	0	0	0	0	0	0	0	0	0
Total HLWV Base Costs	0	0	0	0	0	0	0	0	0	0	0
Total Alt 4 Reddick Costs											
LLWV % of Total Alt 4 Reddick Costs											
Alt 4 LLWV Reddick Costs	0	0	0	0	0	0	0	0	0	0	0
Alternative 4 HLWV Actual Costs ($)	0	0	0	0	0	0	0	0	0	0	0

ALTERNATIVE 4 HLWV BASE COST BREAKDOWN	FY22	FY23	FY24	FY25	FY26	FY27	FY28	FY29	FY30	FY31	FY32
Activity % of Alternative 4 HLWV Base Costs (%)											
Studies/Permitting	0	0	0	0	0	0	0	0	0	0	0
Design	0	0	0	0	0	0	0	0	0	0	0
Construction/D&D	0	0	0	0	0	0	0	0	0	0	0
Operation	0	0	0	0	0	0	0	0	0	0	0
Total Percentage	0	0	0	0	0	0	0	0	0	0	0
Alternative 4 HLWV Base Costs($)											
Studies/Permitting	0	0	0	0	0	0	0	0	0	0	0
Design	0	0	0	0	0	0	0	0	0	0	0
Construction/D&D	0	0	0	0	0	0	0	0	0	0	0
Operation	0	0	0	0	0	0	0	0	0	0	0
Total Cost	0	0	0	0	0	0	0	0	0	0	0

ALTERNATIVE 4 HLWV BASE FTE BREAKDOWN	FY22	FY23	FY24	FY25	FY26	FY27	FY28	FY29	FY30	FY31	FY32
Contractor FTE per Alternative 4 HLWV Activity (FTE)											
STUDIES/PERMITTING - Site Management/Operations	0.0	0.0	0.0	0.0	0.0	0.0	0.0	0.0	0.0	0.0	0.0
STUDIES/PERMITTING - Site Infrastructure	0.0	0.0	0.0	0.0	0.0	0.0	0.0	0.0	0.0	0.0	0.0
STUDIES/PERMITTING - National Laboratories	0.0	0.0	0.0	0.0	0.0	0.0	0.0	0.0	0.0	0.0	0.0
STUDIES/PERMITTING - Site Constructors	0.0	0.0	0.0	0.0	0.0	0.0	0.0	0.0	0.0	0.0	0.0
STUDIES/PERMITTING - Architecture/Engineering Contract	0.0	0.0	0.0	0.0	0.0	0.0	0.0	0.0	0.0	0.0	0.0
STUDIES/PERMITTING - Construction Contractor	0.0	0.0	0.0	0.0	0.0	0.0	0.0	0.0	0.0	0.0	0.0
DESIGN - Site Management/Operations	0.0	0.0	0.0	0.0	0.0	0.0	0.0	0.0	0.0	0.0	0.0
DESIGN - Site Infrastructure	0.0	0.0	0.0	0.0	0.0	0.0	0.0	0.0	0.0	0.0	0.0
DESIGN - National Laboratories	0.0	0.0	0.0	0.0	0.0	0.0	0.0	0.0	0.0	0.0	0.0
DESIGN - Site Constructors	0.0	0.0	0.0	0.0	0.0	0.0	0.0	0.0	0.0	0.0	0.0
DESIGN - Architecture/Engineering Contractors	0.0	0.0	0.0	0.0	0.0	0.0	0.0	0.0	0.0	0.0	0.0
DESIGN - Construction Contractor	0.0	0.0	0.0	0.0	0.0	0.0	0.0	0.0	0.0	0.0	0.0
CONSTRUCTION/D&D - Site Management/Operations	0.0	0.0	0.0	0.0	0.0	0.0	0.0	0.0	0.0	0.0	0.0
CONSTRUCTION/D&D - Site Infrastructure	0.0	0.0	0.0	0.0	0.0	0.0	0.0	0.0	0.0	0.0	0.0
CONSTRUCTION/D&D - National Laboratories	0.0	0.0	0.0	0.0	0.0	0.0	0.0	0.0	0.0	0.0	0.0
CONSTRUCTION/D&D - Site Constructors	0.0	0.0	0.0	0.0	0.0	0.0	0.0	0.0	0.0	0.0	0.0
CONSTRUCTION/D&D - Architecture/Engineering Contracto	0.0	0.0	0.0	0.0	0.0	0.0	0.0	0.0	0.0	0.0	0.0
CONSTRUCTION/D&D - Construction Contractor	0.0	0.0	0.0	0.0	0.0	0.0	0.0	0.0	0.0	0.0	0.0
OPERATIONS - Site Management/Operations	0.0	0.0	0.0	0.0	0.0	0.0	0.0	0.0	0.0	0.0	0.0
OPERATIONS - Site Infrastructure	0.0	0.0	0.0	0.0	0.0	0.0	0.0	0.0	0.0	0.0	0.0
OPERATIONS - National Laboratories	0.0	0.0	0.0	0.0	0.0	0.0	0.0	0.0	0.0	0.0	0.0
OPERATIONS - Site Constructors	0.0	0.0	0.0	0.0	0.0	0.0	0.0	0.0	0.0	0.0	0.0
OPERATIONS - Architecture/Engineering Contractors	0.0	0.0	0.0	0.0	0.0	0.0	0.0	0.0	0.0	0.0	0.0
OPERATIONS - Construction Contractor	0.0	0.0	0.0	0.0	0.0	0.0	0.0	0.0	0.0	0.0	0.0

Worker Category Base FTE (FTE)	FY22	FY23	FY24	FY25	FY26	FY27	FY28	FY29	FY30	FY31	FY32
Engineer/Management	0.0	0.0	0.0	0.0	0.0	0.0	0.0	0.0	0.0	0.0	0.0
Crafts	0.0	0.0	0.0	0.0	0.0	0.0	0.0	0.0	0.0	0.0	0.0
Maintenance	0.0	0.0	0.0	0.0	0.0	0.0	0.0	0.0	0.0	0.0	0.0
Operators	0.0	0.0	0.0	0.0	0.0	0.0	0.0	0.0	0.0	0.0	0.0
Infrastructure	0.0	0.0	0.0	0.0	0.0	0.0	0.0	0.0	0.0	0.0	0.0
Total	0.0	0.0	0.0	0.0	0.0	0.0	0.0	0.0	0.0	0.0	0.0

FUNCTION - ALTERNATIVE 4 HLWV	FY33	FY34	FY35	FY36	FY37	FY38	FY39	FY40	Totals
Technology Development (Test) Cost	0	0	0	0	0	0	0	0	47,129,888
Perform HLW Hot Operations First Year (Hot Test)	0	0	0	0	0	0	0	0	219,742,768
Perform HLW Cold Operations	0	0	0	0	0	0	0	0	197,110,095
Subtotal Test Costs	0	0	0	0	0	0	0	0	463,982,851
Test Oversight Costs	0	0	0	0	0	0	0	0	0
Total HLWV Base Costs	0	0	0	0	0	0	0	0	463,982,851
Total Alt 4 Reddick Costs									199,000,000
LLWV % of Total Alt 4 Reddick Costs									420
Alt 4 LLWV Reddick Costs	0	0	0	0	0	0	0	0	59,700,000
Alternative 4 HLWV Actual Costs ($)	0	0	0	0	0	0	0	0	523,682,851

ALTERNATIVE 4 HLWV BASE COST BREAKDOWN	FY33	FY34	FY35	FY36	FY37	FY38	FY39	FY40	
Activity % of Alternative 4 HLWV Base Costs (%)									
Studies/Permitting	0	0	0	0	0	0	0	0	
Design	0	0	0	0	0	0	0	0	
Construction/D&D	0	0	0	0	0	0	0	0	
Operation	0	0	0	0	0	0	0	0	
Total Percentage	0	0	0	0	0	0	0	0	
Alternative 4 HLWV Base Costs($)									**Totals**
Studies/Permitting	0	0	0	0	0	0	0	0	20,217,575
Design	0	0	0	0	0	0	0	0	1,534,211
Construction/D&D	0	0	0	0	0	0	0	0	4,656,788
Operation	0	0	0	0	0	0	0	0	437,574,277
Total Cost	0	0	0	0	0	0	0	0	463,982,851

ALTERNATIVE 4 HLWV BASE FTE BREAKDOWN	FY33	FY34	FY35	FY36	FY37	FY38	FY39	FY40	Totals
Contractor FTE per Alternative 4 HLWV Activity (FTE)									
STUDIES/PERMITTING - Site Management/Operations	0.0	0.0	0.0	0.0	0.0	0.0	0.0	0.0	92.1
STUDIES/PERMITTING - Site Infrastructure	0.0	0.0	0.0	0.0	0.0	0.0	0.0	0.0	16.2
STUDIES/PERMITTING - National Laboratories	0.0	0.0	0.0	0.0	0.0	0.0	0.0	0.0	27.1
STUDIES/PERMITTING - Site Constructors	0.0	0.0	0.0	0.0	0.0	0.0	0.0	0.0	0.0
STUDIES/PERMITTING - Architecture/Engineering Contract	0.0	0.0	0.0	0.0	0.0	0.0	0.0	0.0	0.0
STUDIES/PERMITTING - Construction Contractor	0.0	0.0	0.0	0.0	0.0	0.0	0.0	0.0	0.0
DESIGN - Site Management/Operations	0.0	0.0	0.0	0.0	0.0	0.0	0.0	0.0	0.9
DESIGN - Site Infrastructure	0.0	0.0	0.0	0.0	0.0	0.0	0.0	0.0	0.2
DESIGN - National Laboratories	0.0	0.0	0.0	0.0	0.0	0.0	0.0	0.0	0.8
DESIGN - Site Constructors	0.0	0.0	0.0	0.0	0.0	0.0	0.0	0.0	0.5
DESIGN - Architecture/Engineering Contractors	0.0	0.0	0.0	0.0	0.0	0.0	0.0	0.0	6.4
DESIGN - Construction Contractor	0.0	0.0	0.0	0.0	0.0	0.0	0.0	0.0	0.0
CONSTRUCTION/D&D - Site Management/Operations	0.0	0.0	0.0	0.0	0.0	0.0	0.0	0.0	1.4
CONSTRUCTION/D&D - Site Infrastructure	0.0	0.0	0.0	0.0	0.0	0.0	0.0	0.0	0.2
CONSTRUCTION/D&D - National Laboratories	0.0	0.0	0.0	0.0	0.0	0.0	0.0	0.0	1.2
CONSTRUCTION/D&D - Site Constructors	0.0	0.0	0.0	0.0	0.0	0.0	0.0	0.0	1.7
CONSTRUCTION/D&D - Architecture/Engineering Contracto	0.0	0.0	0.0	0.0	0.0	0.0	0.0	0.0	1.3
CONSTRUCTION/D&D - Construction Contractor	0.0	0.0	0.0	0.0	0.0	0.0	0.0	0.0	27.4
OPERATIONS - Site Management/Operations	0.0	0.0	0.0	0.0	0.0	0.0	0.0	0.0	1,461.2
OPERATIONS - Site Infrastructure	0.0	0.0	0.0	0.0	0.0	0.0	0.0	0.0	257.9
OPERATIONS - National Laboratories	0.0	0.0	0.0	0.0	0.0	0.0	0.0	0.0	587.0
OPERATIONS - Site Constructors	0.0	0.0	0.0	0.0	0.0	0.0	0.0	0.0	0.0
OPERATIONS - Architecture/Engineering Contractors	0.0	0.0	0.0	0.0	0.0	0.0	0.0	0.0	0.0
OPERATIONS - Construction Contractor	0.0	0.0	0.0	0.0	0.0	0.0	0.0	0.0	0.0

Worker Category Base FTE (FTE)	FY33	FY34	FY35	FY36	FY37	FY38	FY39	FY40	Totals
Engineer/Management	0.0	0.0	0.0	0.0	0.0	0.0	0.0	0.0	548.3
Crafts	0.0	0.0	0.0	0.0	0.0	0.0	0.0	0.0	22.2
Maintenance	0.0	0.0	0.0	0.0	0.0	0.0	0.0	0.0	614.5
Operators	0.0	0.0	0.0	0.0	0.0	0.0	0.0	0.0	1,024.1
Infrastructure	0.0	0.0	0.0	0.0	0.0	0.0	0.0	0.0	274.5
Total	0.0	0.0	0.0	0.0	0.0	0.0	0.0	0.0	2,483.6

ALTERNATIVE 4 HLWV REDDICK COST BREAKDOWN	FY95	FY96	FY97	FY98	FY99	FY00
Activity % of Alternative 4 HLWV Reddick Costs (%)						
Studies/Permitting	100	100	100	0	0	0
Design	0	0	0	100	100	100
Construction/D&D	0	0	0	0	0	0
Operation	0	0	0	0	0	0
Total Percentage	**100**	**100**	**100**	**100**	**100**	**100**
Alternative 4 HLWV Reddick Costs($)						
Studies/Permitting	300,000	300,000	900,000	0	0	0
Design	0	0	0	1,500,000	3,600,000	3,600,000
Construction/D&D	0	0	0	0	0	0
Operation	0	0	0	0	0	0
Total Cost	**300,000**	**300,000**	**900,000**	**1,500,000**	**3,600,000**	**3,600,000**

ALTERNATIVE 4 HLWV REDDICK FTE BREAKDOWN	FY95	FY96	FY97	FY98	FY99	FY00
Contractor FTE per Alternative 4 HLWV Activity (FTE)						
STUDIES/PERMITTING - Site Management/Operations	1.7	1.7	5.2	0.0	0.0	0.0
STUDIES/PERMITTING - Site Infrastructure	0.3	0.3	0.9	0.0	0.0	0.0
STUDIES/PERMITTING - National Laboratories	0.1	0.1	0.2	0.0	0.0	0.0
STUDIES/PERMITTING - Site Constructors	0.0	0.0	0.0	0.0	0.0	0.0
STUDIES/PERMITTING - Architecture/Engineering Contract	0.0	0.0	0.0	0.0	0.0	0.0
STUDIES/PERMITTING - Construction Contractor	0.0	0.0	0.0	0.0	0.0	0.0
DESIGN - Site Management/Operations	0.0	0.0	0.0	0.9	2.2	2.2
DESIGN - Site Infrastructure	0.0	0.0	0.0	0.2	0.4	0.4
DESIGN - National Laboratories	0.0	0.0	0.0	0.8	1.9	1.9
DESIGN - Site Constructors	0.0	0.0	0.0	0.5	1.3	1.3
DESIGN - Architecture/Engineering Contractors	0.0	0.0	0.0	6.3	15.0	15.0
DESIGN - Construction Contractor	0.0	0.0	0.0	0.0	0.0	0.0
CONSTRUCTION/D&D - Site Management/Operations	0.0	0.0	0.0	0.0	0.0	0.0
CONSTRUCTION/D&D - Site Infrastructure	0.0	0.0	0.0	0.0	0.0	0.0
CONSTRUCTION/D&D - National Laboratories	0.0	0.0	0.0	0.0	0.0	0.0
CONSTRUCTION/D&D - Site Constructors	0.0	0.0	0.0	0.0	0.0	0.0
CONSTRUCTION/D&D - Architecture/Engineering Contracto	0.0	0.0	0.0	0.0	0.0	0.0
CONSTRUCTION/D&D - Construction Contractor	0.0	0.0	0.0	0.0	0.0	0.0
OPERATIONS - Site Management/Operations	0.0	0.0	0.0	0.0	0.0	0.0
OPERATIONS - Site Infrastructure	0.0	0.0	0.0	0.0	0.0	0.0
OPERATIONS - National Laboratories	0.0	0.0	0.0	0.0	0.0	0.0
OPERATIONS - Site Constructors	0.0	0.0	0.0	0.0	0.0	0.0
OPERATIONS - Architecture/Engineering Contractors	0.0	0.0	0.0	0.0	0.0	0.0
OPERATIONS - Construction Contractor	0.0	0.0	0.0	0.0	0.0	0.0
Worker Category Reddick FTE (FTE)						
Engineer/Management	1.8	1.8	5.4	8.5	20.4	20.4
Crafts	0.0	0.0	0.0	0.0	0.0	0.0
Maintenance	0.0	0.0	0.0	0.0	0.0	0.0
Operators	0.0	0.0	0.0	0.0	0.0	0.0
Infrastructure	0.3	0.3	0.9	0.2	0.4	0.4
Total	**2.1**	**2.1**	**6.3**	**8.7**	**20.8**	**20.8**

ALTERNATIVE 4 HLWV COST SUMMARY	FY95	FY96	FY97	FY98	FY99	FY00
Studies/Permitting	**6,412,047**	**7,995,852**	**7,028,623**	**281,052**	**0**	**0**
Design	**679,116**	**855,095**	**0**	**1,500,000**	**3,600,000**	**3,600,000**
Construction/D&D	**1,358,233**	**1,710,189**	**1,532,156**	**56,210**	**0**	**0**
Operation	**5,432,931**	**6,840,758**	**7,660,779**	**786,946**	**0**	**0**
Total	**13,882,327**	**17,401,894**	**16,221,558**	**2,624,209**	**3,600,000**	**3,600,000**

ALTERNATIVE 4 HLWV FTE SUMMARY	FY95	FY96	FY97	FY98	FY99	FY00
Engineer/Management	**49.9**	**62.4**	**52.3**	**11.0**	**20.4**	**20.4**
Crafts	**6.5**	**8.2**	**7.3**	**0.3**	**0.0**	**0.0**
Maintenance	**7.6**	**9.6**	**10.8**	**1.1**	**0.0**	**0.0**
Operators	**12.7**	**16.0**	**17.9**	**1.8**	**0.0**	**0.0**
Infrastructure	**8.6**	**10.7**	**10.4**	**0.9**	**0.4**	**0.4**
Total	**85.3**	**106.9**	**98.7**	**15.1**	**20.8**	**20.8**

ALTERNATIVE 4 HLWV REDDICK COST BREAKDOWN	FY01	FY02	FY03	FY04	FY05	FY06
Activity % of Alternative 4 HLWV Reddick Costs (%)						
Studies/Permitting	0	0	0	0	0	0
Design	0	0	0	0	0	0
Construction/D&D	100	100	100	0	0	0
Operation	0	0	0	100	100	100
Total Percentage	**100**	**100**	**100**	**100**	**100**	**100**
Alternative 4 HLWV Reddick Costs($)						
Studies/Permitting	0	0	0	0	0	0
Design	0	0	0	0	0	0
Construction/D&D	9,000,000	12,000,000	13,500,000	0	0	0
Operation	0	0	0	3,000,000	3,000,000	3,000,000
Total Cost	**9,000,000**	**12,000,000**	**13,500,000**	**3,000,000**	**3,000,000**	**3,000,000**

ALTERNATIVE 4 HLWV REDDICK FTE BREAKDOWN	FY01	FY02	FY03	FY04	FY05	FY06
Contractor FTE per Alternative 4 HLWV Activity (FTE)						
STUDIES/PERMITTING - Site Management/Operations	0.0	0.0	0.0	0.0	0.0	0.0
STUDIES/PERMITTING - Site Infrastructure	0.0	0.0	0.0	0.0	0.0	0.0
STUDIES/PERMITTING - National Laboratories	0.0	0.0	0.0	0.0	0.0	0.0
STUDIES/PERMITTING - Site Constructors	0.0	0.0	0.0	0.0	0.0	0.0
STUDIES/PERMITTING - Architecture/Engineering Contract	0.0	0.0	0.0	0.0	0.0	0.0
STUDIES/PERMITTING - Construction Contractor	0.0	0.0	0.0	0.0	0.0	0.0
DESIGN - Site Management/Operations	0.0	0.0	0.0	0.0	0.0	0.0
DESIGN - Site Infrastructure	0.0	0.0	0.0	0.0	0.0	0.0
DESIGN - National Laboratories	0.0	0.0	0.0	0.0	0.0	0.0
DESIGN - Site Constructors	0.0	0.0	0.0	0.0	0.0	0.0
DESIGN - Architecture/Engineering Contractors	0.0	0.0	0.0	0.0	0.0	0.0
DESIGN - Construction Contractor	0.0	0.0	0.0	0.0	0.0	0.0
CONSTRUCTION/D&D - Site Management/Operations	5.5	7.3	8.2	0.0	0.0	0.0
CONSTRUCTION/D&D - Site Infrastructure	1.0	1.3	1.4	0.0	0.0	0.0
CONSTRUCTION/D&D - National Laboratories	0.0	0.0	0.0	0.0	0.0	0.0
CONSTRUCTION/D&D - Site Constructors	3.2	4.3	4.8	0.0	0.0	0.0
CONSTRUCTION/D&D - Architecture/Engineering Contracto	2.5	3.3	3.8	0.0	0.0	0.0
CONSTRUCTION/D&D - Construction Contractor	52.9	70.6	79.4	0.0	0.0	0.0
OPERATIONS - Site Management/Operations	0.0	0.0	0.0	12.8	12.8	12.8
OPERATIONS - Site Infrastructure	0.0	0.0	0.0	2.3	2.3	2.3
OPERATIONS - National Laboratories	0.0	0.0	0.0	1.6	1.6	1.6
OPERATIONS - Site Constructors	0.0	0.0	0.0	0.0	0.0	0.0
OPERATIONS - Architecture/Engineering Contractors	0.0	0.0	0.0	0.0	0.0	0.0
OPERATIONS - Construction Contractor	0.0	0.0	0.0	0.0	0.0	0.0
Worker Category Reddick FTE (FTE)						
Engineer/Management	21.1	28.2	31.7	2.9	2.9	2.9
Crafts	43.0	57.3	64.5	0.0	0.0	0.0
Maintenance	0.0	0.0	0.0	4.3	4.3	4.3
Operators	0.0	0.0	0.0	7.2	7.2	7.2
Infrastructure	1.0	1.3	1.4	2.3	2.3	2.3
Total	**65.1**	**86.8**	**97.6**	**16.6**	**16.6**	**16.6**

ALTERNATIVE 4 HLWV COST SUMMARY	FY01	FY02	FY03	FY04	FY05	FY06
Studies/Permitting	**0**	**0**	**0**	**0**	**0**	**0**
Design	**0**	**0**	**0**	**0**	**0**	**0**
Construction/D&D	**9,000,000**	**12,000,000**	**13,500,000**	**0**	**0**	**0**
Operation	**0**	**0**	**0**	**3,857,272**	**19,282,120**	**39,334,800**
Total	**9,000,000**	**12,000,000**	**13,500,000**	**3,857,272**	**19,282,120**	**39,334,800**

ALTERNATIVE 4 HLWV FTE SUMMARY	FY01	FY02	FY03	FY04	FY05	FY06
Engineer/Management	**21.1**	**28.2**	**31.7**	**3.7**	**18.1**	**36.9**
Crafts	**43.0**	**57.3**	**64.5**	**0.0**	**0.0**	**0.0**
Maintenance	**0.0**	**0.0**	**0.0**	**5.5**	**27.2**	**55.3**
Operators	**0.0**	**0.0**	**0.0**	**9.2**	**45.3**	**92.2**
Infrastructure	**1.0**	**1.3**	**1.4**	**2.8**	**11.8**	**23.7**
Total	**65.1**	**86.8**	**97.6**	**21.1**	**102.4**	**208.1**

ALTERNATIVE 4 HLWV REDDICK COST BREAKDOWN	FY07	FY08	FY09	FY10	FY11	FY12
Activity % of Alternative 4 HLWV Reddick Costs (%)						
Studies/Permitting	0	0	0	0	0	0
Design	0	0	0	0	0	0
Construction/D&D	0	0	0	0	0	0
Operation	100	100	0	0	0	0
Total Percentage	100	100	0	0	0	0
Alternative 4 HLWV Reddick Costs($)						
Studies/Permitting	0	0	0	0	0	0
Design	0	0	0	0	0	0
Construction/D&D	0	0	0	0	0	0
Operation	3,000,000	3,000,000	0	0	0	0
Total Cost	3,000,000	3,000,000	0	0	0	0

ALTERNATIVE 4 HLWV REDDICK FTE BREAKDOWN	FY07	FY08	FY09	FY10	FY11	FY12
Contractor FTE per Alternative 4 HLWV Activity (FTE)						
STUDIES/PERMITTING - Site Management/Operations	0.0	0.0	0.0	0.0	0.0	0.0
STUDIES/PERMITTING - Site Infrastructure	0.0	0.0	0.0	0.0	0.0	0.0
STUDIES/PERMITTING - National Laboratories	0.0	0.0	0.0	0.0	0.0	0.0
STUDIES/PERMITTING - Site Constructors	0.0	0.0	0.0	0.0	0.0	0.0
STUDIES/PERMITTING - Architecture/Engineering Contract	0.0	0.0	0.0	0.0	0.0	0.0
STUDIES/PERMITTING - Construction Contractor	0.0	0.0	0.0	0.0	0.0	0.0
DESIGN - Site Management/Operations	0.0	0.0	0.0	0.0	0.0	0.0
DESIGN - Site Infrastructure	0.0	0.0	0.0	0.0	0.0	0.0
DESIGN - National Laboratories	0.0	0.0	0.0	0.0	0.0	0.0
DESIGN - Site Constructors	0.0	0.0	0.0	0.0	0.0	0.0
DESIGN - Architecture/Engineering Contractors	0.0	0.0	0.0	0.0	0.0	0.0
DESIGN - Construction Contractor	0.0	0.0	0.0	0.0	0.0	0.0
CONSTRUCTION/D&D - Site Management/Operations	0.0	0.0	0.0	0.0	0.0	0.0
CONSTRUCTION/D&D - Site Infrastructure	0.0	0.0	0.0	0.0	0.0	0.0
CONSTRUCTION/D&D - National Laboratories	0.0	0.0	0.0	0.0	0.0	0.0
CONSTRUCTION/D&D - Site Constructors	0.0	0.0	0.0	0.0	0.0	0.0
CONSTRUCTION/D&D - Architecture/Engineering Contracto	0.0	0.0	0.0	0.0	0.0	0.0
CONSTRUCTION/D&D - Construction Contractor	0.0	0.0	0.0	0.0	0.0	0.0
OPERATIONS - Site Management/Operations	12.8	12.8	0.0	0.0	0.0	0.0
OPERATIONS - Site Infrastructure	2.3	2.3	0.0	0.0	0.0	0.0
OPERATIONS - National Laboratories	1.6	1.6	0.0	0.0	0.0	0.0
OPERATIONS - Site Constructors	0.0	0.0	0.0	0.0	0.0	0.0
OPERATIONS - Architecture/Engineering Contractors	0.0	0.0	0.0	0.0	0.0	0.0
OPERATIONS - Construction Contractor	0.0	0.0	0.0	0.0	0.0	0.0
Worker Category Reddick FTE (FTE)						
Engineer/Management	2.9	2.9	0.0	0.0	0.0	0.0
Crafts	0.0	0.0	0.0	0.0	0.0	0.0
Maintenance	4.3	4.3	0.0	0.0	0.0	0.0
Operators	7.2	7.2	0.0	0.0	0.0	0.0
Infrastructure	2.3	2.3	0.0	0.0	0.0	0.0
Total	16.6	16.6	0.0	0.0	0.0	0.0

ALTERNATIVE 4 HLWV COST SUMMARY	FY07	FY08	FY09	FY10	FY11	FY12
Studies/Permitting	0	0	0	0	0	0
Design	0	0	0	0	0	0
Construction/D&D	0	0	0	0	0	0
Operation	61,298,612	81,584,160	6,753,131	219,742,768	0	0
Total	61,298,612	81,584,160	6,753,131	219,742,768	0	0

ALTERNATIVE 4 HLWV FTE SUMMARY	FY07	FY08	FY09	FY10	FY11	FY12
Engineer/Management	57.4	76.4	6.3	205.7	0.0	0.0
Crafts	0.0	0.0	0.0	0.0	0.0	0.0
Maintenance	86.2	114.7	9.5	308.6	0.0	0.0
Operators	143.6	191.1	15.8	514.3	0.0	0.0
Infrastructure	36.6	48.6	4.0	129.5	0.0	0.0
Total	323.8	430.8	35.6	1,158.1	0.0	0.0

ALTERNATIVE 4 HLWV REDDICK COST BREAKDOWN	FY13	FY14	FY15	FY16	FY17	FY18	FY19	FY20	FY21
Activity % of Alternative 4 HLWV Reddick Costs (%)									
Studies/Permitting	0	0	0	0	0	0	0	0	0
Design	0	0	0	0	0	0	0	0	0
Construction/D&D	0	0	0	0	0	0	0	0	0
Operation	0	0	0	0	0	0	0	0	0
Total Percentage	0	0	0	0	0	0	0	0	0
Alternative 4 HLWV Reddick Costs($)									
Studies/Permitting	0	0	0	0	0	0	0	0	0
Design	0	0	0	0	0	0	0	0	0
Construction/D&D	0	0	0	0	0	0	0	0	0
Operation	0	0	0	0	0	0	0	0	0
Total Cost	0	0	0	0	0	0	0	0	0

ALTERNATIVE 4 HLWV REDDICK FTE BREAKDOWN	FY13	FY14	FY15	FY16	FY17	FY18	FY19	FY20	FY21
Contractor FTE per Alternative 4 HLWV Activity (FTE)									
STUDIES/PERMITTING - Site Management/Operations	0.0	0.0	0.0	0.0	0.0	0.0	0.0	0.0	0.0
STUDIES/PERMITTING - Site Infrastructure	0.0	0.0	0.0	0.0	0.0	0.0	0.0	0.0	0.0
STUDIES/PERMITTING - National Laboratories	0.0	0.0	0.0	0.0	0.0	0.0	0.0	0.0	0.0
STUDIES/PERMITTING - Site Constructors	0.0	0.0	0.0	0.0	0.0	0.0	0.0	0.0	0.0
STUDIES/PERMITTING - Architecture/Engineering Contract	0.0	0.0	0.0	0.0	0.0	0.0	0.0	0.0	0.0
STUDIES/PERMITTING - Construction Contractor	0.0	0.0	0.0	0.0	0.0	0.0	0.0	0.0	0.0
DESIGN - Site Management/Operations	0.0	0.0	0.0	0.0	0.0	0.0	0.0	0.0	0.0
DESIGN - Site Infrastructure	0.0	0.0	0.0	0.0	0.0	0.0	0.0	0.0	0.0
DESIGN - National Laboratories	0.0	0.0	0.0	0.0	0.0	0.0	0.0	0.0	0.0
DESIGN - Site Constructors	0.0	0.0	0.0	0.0	0.0	0.0	0.0	0.0	0.0
DESIGN - Architecture/Engineering Contractors	0.0	0.0	0.0	0.0	0.0	0.0	0.0	0.0	0.0
DESIGN - Construction Contractor	0.0	0.0	0.0	0.0	0.0	0.0	0.0	0.0	0.0
CONSTRUCTION/D&D - Site Management/Operations	0.0	0.0	0.0	0.0	0.0	0.0	0.0	0.0	0.0
CONSTRUCTION/D&D - Site Infrastructure	0.0	0.0	0.0	0.0	0.0	0.0	0.0	0.0	0.0
CONSTRUCTION/D&D - National Laboratories	0.0	0.0	0.0	0.0	0.0	0.0	0.0	0.0	0.0
CONSTRUCTION/D&D - Site Constructors	0.0	0.0	0.0	0.0	0.0	0.0	0.0	0.0	0.0
CONSTRUCTION/D&D - Architecture/Engineering Contracto	0.0	0.0	0.0	0.0	0.0	0.0	0.0	0.0	0.0
CONSTRUCTION/D&D - Construction Contractor	0.0	0.0	0.0	0.0	0.0	0.0	0.0	0.0	0.0
OPERATIONS - Site Management/Operations	0.0	0.0	0.0	0.0	0.0	0.0	0.0	0.0	0.0
OPERATIONS - Site Infrastructure	0.0	0.0	0.0	0.0	0.0	0.0	0.0	0.0	0.0
OPERATIONS - National Laboratories	0.0	0.0	0.0	0.0	0.0	0.0	0.0	0.0	0.0
OPERATIONS - Site Constructors	0.0	0.0	0.0	0.0	0.0	0.0	0.0	0.0	0.0
OPERATIONS - Architecture/Engineering Contractors	0.0	0.0	0.0	0.0	0.0	0.0	0.0	0.0	0.0
OPERATIONS - Construction Contractor	0.0	0.0	0.0	0.0	0.0	0.0	0.0	0.0	0.0
Worker Category Reddick FTE (FTE)									
Engineer/Management	0.0	0.0	0.0	0.0	0.0	0.0	0.0	0.0	0.0
Crafts	0.0	0.0	0.0	0.0	0.0	0.0	0.0	0.0	0.0
Maintenance	0.0	0.0	0.0	0.0	0.0	0.0	0.0	0.0	0.0
Operators	0.0	0.0	0.0	0.0	0.0	0.0	0.0	0.0	0.0
Infrastructure	0.0	0.0	0.0	0.0	0.0	0.0	0.0	0.0	0.0
Total	0.0	0.0	0.0	0.0	0.0	0.0	0.0	0.0	0.0

ALTERNATIVE 4 HLWV COST SUMMARY	FY13	FY14	FY15	FY16	FY17	FY18	FY19	FY20	FY21
Studies/Permitting	0	0	0	0	0	0	0	0	0
Design	0	0	0	0	0	0	0	0	0
Construction/D&D	0	0	0	0	0	0	0	0	0
Operation	0	0	0	0	0	0	0	0	0
Total	0	0	0	0	0	0	0	0	0

ALTERNATIVE 4 HLWV FTE SUMMARY	FY13	FY14	FY15	FY16	FY17	FY18	FY19	FY20	FY21
Engineer/Management	0.0	0.0	0.0	0.0	0.0	0.0	0.0	0.0	0.0
Crafts	0.0	0.0	0.0	0.0	0.0	0.0	0.0	0.0	0.0
Maintenance	0.0	0.0	0.0	0.0	0.0	0.0	0.0	0.0	0.0
Operators	0.0	0.0	0.0	0.0	0.0	0.0	0.0	0.0	0.0
Infrastructure	0.0	0.0	0.0	0.0	0.0	0.0	0.0	0.0	0.0
Total	0.0	0.0	0.0	0.0	0.0	0.0	0.0	0.0	0.0

ALTERNATIVE 4 HLWV REDDICK COST BREAKDOWN	FY22	FY23	FY24	FY25	FY26	FY27	FY28	FY29	FY30	FY31	FY32
Activity % of Alternative 4 HLWV Reddick Costs (%)											
Studies/Permitting	0	0	0	0	0	0	0	0	0	0	0
Design	0	0	0	0	0	0	0	0	0	0	0
Construction/D&D	0	0	0	0	0	0	0	0	0	0	0
Operation	0	0	0	0	0	0	0	0	0	0	0
Total Percentage	0	0	0	0	0	0	0	0	0	0	0
Alternative 4 HLWV Reddick Costs($)											
Studies/Permitting	0	0	0	0	0	0	0	0	0	0	0
Design	0	0	0	0	0	0	0	0	0	0	0
Construction/D&D	0	0	0	0	0	0	0	0	0	0	0
Operation	0	0	0	0	0	0	0	0	0	0	0
Total Cost	0	0	0	0	0	0	0	0	0	0	0

ALTERNATIVE 4 HLWV REDDICK FTE BREAKDOWN	FY22	FY23	FY24	FY25	FY26	FY27	FY28	FY29	FY30	FY31	FY32
Contractor FTE per Alternative 4 HLWV Activity (FTE)											
STUDIES/PERMITTING - Site Management/Operations	0.0	0.0	0.0	0.0	0.0	0.0	0.0	0.0	0.0	0.0	0.0
STUDIES/PERMITTING - Site Infrastructure	0.0	0.0	0.0	0.0	0.0	0.0	0.0	0.0	0.0	0.0	0.0
STUDIES/PERMITTING - National Laboratories	0.0	0.0	0.0	0.0	0.0	0.0	0.0	0.0	0.0	0.0	0.0
STUDIES/PERMITTING - Site Constructors	0.0	0.0	0.0	0.0	0.0	0.0	0.0	0.0	0.0	0.0	0.0
STUDIES/PERMITTING - Architecture/Engineering Contract	0.0	0.0	0.0	0.0	0.0	0.0	0.0	0.0	0.0	0.0	0.0
STUDIES/PERMITTING - Construction Contractor	0.0	0.0	0.0	0.0	0.0	0.0	0.0	0.0	0.0	0.0	0.0
DESIGN - Site Management/Operations	0.0	0.0	0.0	0.0	0.0	0.0	0.0	0.0	0.0	0.0	0.0
DESIGN - Site Infrastructure	0.0	0.0	0.0	0.0	0.0	0.0	0.0	0.0	0.0	0.0	0.0
DESIGN - National Laboratories	0.0	0.0	0.0	0.0	0.0	0.0	0.0	0.0	0.0	0.0	0.0
DESIGN - Site Constructors	0.0	0.0	0.0	0.0	0.0	0.0	0.0	0.0	0.0	0.0	0.0
DESIGN - Architecture/Engineering Contractors	0.0	0.0	0.0	0.0	0.0	0.0	0.0	0.0	0.0	0.0	0.0
DESIGN - Construction Contractor	0.0	0.0	0.0	0.0	0.0	0.0	0.0	0.0	0.0	0.0	0.0
CONSTRUCTION/D&D - Site Management/Operations	0.0	0.0	0.0	0.0	0.0	0.0	0.0	0.0	0.0	0.0	0.0
CONSTRUCTION/D&D - Site Infrastructure	0.0	0.0	0.0	0.0	0.0	0.0	0.0	0.0	0.0	0.0	0.0
CONSTRUCTION/D&D - National Laboratories	0.0	0.0	0.0	0.0	0.0	0.0	0.0	0.0	0.0	0.0	0.0
CONSTRUCTION/D&D - Site Constructors	0.0	0.0	0.0	0.0	0.0	0.0	0.0	0.0	0.0	0.0	0.0
CONSTRUCTION/D&D - Architecture/Engineering Contracto	0.0	0.0	0.0	0.0	0.0	0.0	0.0	0.0	0.0	0.0	0.0
CONSTRUCTION/D&D - Construction Contractor	0.0	0.0	0.0	0.0	0.0	0.0	0.0	0.0	0.0	0.0	0.0
OPERATIONS - Site Management/Operations	0.0	0.0	0.0	0.0	0.0	0.0	0.0	0.0	0.0	0.0	0.0
OPERATIONS - Site Infrastructure	0.0	0.0	0.0	0.0	0.0	0.0	0.0	0.0	0.0	0.0	0.0
OPERATIONS - National Laboratories	0.0	0.0	0.0	0.0	0.0	0.0	0.0	0.0	0.0	0.0	0.0
OPERATIONS - Site Constructors	0.0	0.0	0.0	0.0	0.0	0.0	0.0	0.0	0.0	0.0	0.0
OPERATIONS - Architecture/Engineering Contractors	0.0	0.0	0.0	0.0	0.0	0.0	0.0	0.0	0.0	0.0	0.0
OPERATIONS - Construction Contractor	0.0	0.0	0.0	0.0	0.0	0.0	0.0	0.0	0.0	0.0	0.0
Worker Category Reddick FTE (FTE)											
Engineer/Management	0.0	0.0	0.0	0.0	0.0	0.0	0.0	0.0	0.0	0.0	0.0
Crafts	0.0	0.0	0.0	0.0	0.0	0.0	0.0	0.0	0.0	0.0	0.0
Maintenance	0.0	0.0	0.0	0.0	0.0	0.0	0.0	0.0	0.0	0.0	0.0
Operators	0.0	0.0	0.0	0.0	0.0	0.0	0.0	0.0	0.0	0.0	0.0
Infrastructure	0.0	0.0	0.0	0.0	0.0	0.0	0.0	0.0	0.0	0.0	0.0
Total	0.0	0.0	0.0	0.0	0.0	0.0	0.0	0.0	0.0	0.0	0.0

ALTERNATIVE 4 HLWV COST SUMMARY	FY22	FY23	FY24	FY25	FY26	FY27	FY28	FY29	FY30	FY31	FY32
Studies/Permitting	0	0	0	0	0	0	0	0	0	0	0
Design	0	0	0	0	0	0	0	0	0	0	0
Construction/D&D	0	0	0	0	0	0	0	0	0	0	0
Operation	0	0	0	0	0	0	0	0	0	0	0
Total	0	0	0	0	0	0	0	0	0	0	0

ALTERNATIVE 4 HLWV FTE SUMMARY	FY22	FY23	FY24	FY25	FY26	FY27	FY28	FY29	FY30	FY31	FY32
Engineer/Management	0.0	0.0	0.0	0.0	0.0	0.0	0.0	0.0	0.0	0.0	0.0
Crafts	0.0	0.0	0.0	0.0	0.0	0.0	0.0	0.0	0.0	0.0	0.0
Maintenance	0.0	0.0	0.0	0.0	0.0	0.0	0.0	0.0	0.0	0.0	0.0
Operators	0.0	0.0	0.0	0.0	0.0	0.0	0.0	0.0	0.0	0.0	0.0
Infrastructure	0.0	0.0	0.0	0.0	0.0	0.0	0.0	0.0	0.0	0.0	0.0
Total	0.0	0.0	0.0	0.0	0.0	0.0	0.0	0.0	0.0	0.0	0.0

ALTERNATIVE 4 HLWV REDDICK COST BREAKDOWN	FY33	FY34	FY35	FY36	FY37	FY38	FY39	FY40	
Activity % of Alternative 4 HLWV Reddick Costs (%)									
Studies/Permitting	0	0	0	0	0	0	0	0	
Design	0	0	0	0	0	0	0	0	
Construction/D&D	0	0	0	0	0	0	0	0	
Operation	0	0	0	0	0	0	0	0	
Total Percentage	0	0	0	0	0	0	0	0	
Alternative 4 HLWV Reddick Costs($)									**Totals**
Studies/Permitting	0	0	0	0	0	0	0	0	1,500,000
Design	0	0	0	0	0	0	0	0	8,700,000
Construction/D&D	0	0	0	0	0	0	0	0	34,500,000
Operation	0	0	0	0	0	0	0	0	15,000,000
Total Cost	0	0	0	0	0	0	0	0	59,700,000

ALTERNATIVE 4 HLWV REDDICK FTE BREAKDOWN	FY33	FY34	FY35	FY36	FY37	FY38	FY39	FY40	Totals
Contractor FTE per Alternative 4 HLWV Activity (FTE)									
STUDIES/PERMITTING - Site Management/Operations	0.0	0.0	0.0	0.0	0.0	0.0	0.0	0.0	8.7
STUDIES/PERMITTING - Site Infrastructure	0.0	0.0	0.0	0.0	0.0	0.0	0.0	0.0	1.5
STUDIES/PERMITTING - National Laboratories	0.0	0.0	0.0	0.0	0.0	0.0	0.0	0.0	0.4
STUDIES/PERMITTING - Site Constructors	0.0	0.0	0.0	0.0	0.0	0.0	0.0	0.0	0.0
STUDIES/PERMITTING - Architecture/Engineering Contract	0.0	0.0	0.0	0.0	0.0	0.0	0.0	0.0	0.0
STUDIES/PERMITTING - Construction Contractor	0.0	0.0	0.0	0.0	0.0	0.0	0.0	0.0	0.0
DESIGN - Site Management/Operations	0.0	0.0	0.0	0.0	0.0	0.0	0.0	0.0	5.3
DESIGN - Site Infrastructure	0.0	0.0	0.0	0.0	0.0	0.0	0.0	0.0	0.9
DESIGN - National Laboratories	0.0	0.0	0.0	0.0	0.0	0.0	0.0	0.0	4.7
DESIGN - Site Constructors	0.0	0.0	0.0	0.0	0.0	0.0	0.0	0.0	3.1
DESIGN - Architecture/Engineering Contractors	0.0	0.0	0.0	0.0	0.0	0.0	0.0	0.0	36.3
DESIGN - Construction Contractor	0.0	0.0	0.0	0.0	0.0	0.0	0.0	0.0	0.0
CONSTRUCTION/D&D - Site Management/Operations	0.0	0.0	0.0	0.0	0.0	0.0	0.0	0.0	20.9
CONSTRUCTION/D&D - Site Infrastructure	0.0	0.0	0.0	0.0	0.0	0.0	0.0	0.0	3.7
CONSTRUCTION/D&D - National Laboratories	0.0	0.0	0.0	0.0	0.0	0.0	0.0	0.0	0.0
CONSTRUCTION/D&D - Site Constructors	0.0	0.0	0.0	0.0	0.0	0.0	0.0	0.0	12.3
CONSTRUCTION/D&D - Architecture/Engineering Contracto	0.0	0.0	0.0	0.0	0.0	0.0	0.0	0.0	9.6
CONSTRUCTION/D&D - Construction Contractor	0.0	0.0	0.0	0.0	0.0	0.0	0.0	0.0	202.9
OPERATIONS - Site Management/Operations	0.0	0.0	0.0	0.0	0.0	0.0	0.0	0.0	63.8
OPERATIONS - Site Infrastructure	0.0	0.0	0.0	0.0	0.0	0.0	0.0	0.0	11.3
OPERATIONS - National Laboratories	0.0	0.0	0.0	0.0	0.0	0.0	0.0	0.0	8.0
OPERATIONS - Site Constructors	0.0	0.0	0.0	0.0	0.0	0.0	0.0	0.0	0.0
OPERATIONS - Architecture/Engineering Contractors	0.0	0.0	0.0	0.0	0.0	0.0	0.0	0.0	0.0
OPERATIONS - Construction Contractor	0.0	0.0	0.0	0.0	0.0	0.0	0.0	0.0	0.0
Worker Category Reddick FTE (FTE)									
Engineer/Management	0.0	0.0	0.0	0.0	0.0	0.0	0.0	0.0	153.7
Crafts	0.0	0.0	0.0	0.0	0.0	0.0	0.0	0.0	164.8
Maintenance	0.0	0.0	0.0	0.0	0.0	0.0	0.0	0.0	21.5
Operators	0.0	0.0	0.0	0.0	0.0	0.0	0.0	0.0	35.9
Infrastructure	0.0	0.0	0.0	0.0	0.0	0.0	0.0	0.0	17.4
Total	0.0	0.0	0.0	0.0	0.0	0.0	0.0	0.0	393.4

ALTERNATIVE 4 HLWV COST SUMMARY	FY33	FY34	FY35	FY36	FY37	FY38	FY39	FY40	Totals
Studies/Permitting	0	0	0	0	0	0	0	0	21,717,575
Design	0	0	0	0	0	0	0	0	10,234,211
Construction/D&D	0	0	0	0	0	0	0	0	39,156,788
Operation	0	0	0	0	0	0	0	0	452,574,277
Total	0	0	0	0	0	0	0	0	523,682,851

ALTERNATIVE 4 HLWV FTE SUMMARY	FY33	FY34	FY35	FY36	FY37	FY38	FY39	FY40	Totals
Engineer/Management	0.0	0.0	0.0	0.0	0.0	0.0	0.0	0.0	702.0
Crafts	0.0	0.0	0.0	0.0	0.0	0.0	0.0	0.0	187.1
Maintenance	0.0	0.0	0.0	0.0	0.0	0.0	0.0	0.0	636.0
Operators	0.0	0.0	0.0	0.0	0.0	0.0	0.0	0.0	1,060.0
Infrastructure	0.0	0.0	0.0	0.0	0.0	0.0	0.0	0.0	291.9
Total	0.0	0.0	0.0	0.0	0.0	0.0	0.0	0.0	2,877.0

APPENDIX B-3: ALTERNATIVE 1 COST AND FTE RESOURCES

This page intentionally left blank.

FUNCTION - ALTERNATIVE 1 RETRIEVAL	FY95	FY96	FY97	FY98	FY99	FY00
Technology Development (Test) Cost	11,184,609	22,300,346	8,897,309	133,615	0	0
Retrieve SY-101, SY-103	0	0	0	0	816,894	1,277,706
Perform Arm-based SST WR Demo C-106	0	0	0	0	0	0
Project W-151	11,728,347	979,456	1,111,604	257,366	0	0
Project W-211	5,847,000	14,913,124	26,519,114	7,227,763	0	0
Perform sluicing WR Demo C-106	0	0	0	7,715,732	1,936,618	0
Project W-340	4,000,000	8,440,000	168,924		0	0
Subtotal Test Costs	32,759,956	46,632,926	36,696,951	15,334,476	2,753,512	1,277,706
Test Oversight Costs	3,275,996	4,663,293	3,669,695	1,533,448	275,351	127,771
Total Retrieval Base Costs	**36,035,952**	**51,296,219**	**40,366,646**	**16,867,924**	**3,028,863**	**1,405,477**
Total Alt 1 Reddick Costs	2,000,000	2,000,000	6,000,000	10,000,000	35,000,000	35,000,000
Retrieval % of Total Alt 1 Reddick Costs	5	5	5	5	5	5
Alt 1 Retrieval Reddick Costs	**100,000**	**100,000**	**300,000**	**500,000**	**1,750,000**	**1,750,000**
Alt 1 Retrieval Actual Costs ($)	**36,135,952**	**51,396,219**	**40,666,646**	**17,367,924**	**4,778,863**	**3,155,477**

ALTERNATIVE 1 RETRIEVAL BASE COST BREAKDOWN	FY95	FY96	FY97	FY98	FY99	FY00
Activity % of Alt 1 Retrieval Base Costs (%)						
Studies/Permitting	55	45	40	20	15	10
Design	10	20	20	30	15	0
Construction/D&D	15	10	20	40	45	45
Operation	20	25	20	10	25	45
Total Percentage	**100**	**100**	**100**	**100**	**100**	**100**
Alt 1 Retrieval Activity Base Costs($)						
Studies/Permitting	19,819,773	23,083,298	16,146,658	3,373,585	454,329	140,548
Design	3,603,595	10,259,244	8,073,329	5,060,377	454,329	0
Construction/D&D	5,405,393	5,129,622	8,073,329	6,747,169	1,362,988	632,464
Operation	7,207,190	12,824,055	8,073,329	1,686,792	757,216	632,464
Total Cost	**36,035,952**	**51,296,219**	**40,366,646**	**16,867,924**	**3,028,863**	**1,405,477**

ALTERNATIVE 1 RETRIEVAL BASE FTE BREAKDOWN	FY95	FY96	FY97	FY98	FY99	FY00
Contractor Base FTE per Alt 1 Retrieval Activity (FTE)						
STUDIES/PERMITTING - Site Management/Operations	90.3	105.1	73.5	15.4	2.1	0.6
STUDIES/PERMITTING - Site Infrastructure	15.9	18.5	13.0	2.7	0.4	0.1
STUDIES/PERMITTING - National Laboratories	26.6	31.0	21.7	4.5	0.6	0.2
STUDIES/PERMITTING - Site Constructors	0.0	0.0	0.0	0.0	0.0	0.0
STUDIES/PERMITTING - Architecture/Engineering Contract	0.0	0.0	0.0	0.0	0.0	0.0
STUDIES/PERMITTING - Construction Contractor	0.0	0.0	0.0	0.0	0.0	0.0
DESIGN - Site Management/Operations	2.2	6.2	4.9	3.1	0.3	0.0
DESIGN - Site Infrastructure	0.4	1.1	0.9	0.5	0.0	0.0
DESIGN - National Laboratories	1.9	5.5	4.3	2.7	0.2	0.0
DESIGN - Site Constructors	1.3	3.7	2.9	1.8	0.2	0.0
DESIGN - Architecture/Engineering Contractors	15.0	42.7	33.6	21.1	1.9	0.0
DESIGN - Construction Contractor	0.0	0.0	0.0	0.0	0.0	0.0
CONSTRUCTION/D&D - Site Management/Operations	1.6	1.6	2.5	2.0	0.4	0.2
CONSTRUCTION/D&D - Site Infrastructure	0.3	0.3	0.4	0.4	0.1	0.0
CONSTRUCTION/D&D - National Laboratories	1.5	1.4	2.2	1.8	0.4	0.2
CONSTRUCTION/D&D - Site Constructors	1.9	1.8	2.9	2.4	0.5	0.2
CONSTRUCTION/D&D - Architecture/Engineering Contracto	1.5	1.4	2.2	1.9	0.4	0.2
CONSTRUCTION/D&D - Construction Contractor	31.8	30.2	47.5	39.7	8.0	3.7
OPERATIONS - Site Management/Operations	24.1	42.8	27.0	5.6	2.5	2.1
OPERATIONS - Site Infrastructure	4.2	7.6	4.8	1.0	0.4	0.4
OPERATIONS - National Laboratories	9.7	17.2	10.8	2.3	1.0	0.8
OPERATIONS - Site Constructors	0.0	0.0	0.0	0.0	0.0	0.0
OPERATIONS - Architecture/Engineering Contractors	0.0	0.0	0.0	0.0	0.0	0.0
OPERATIONS - Construction Contractor	0.0	0.0	0.0	0.0	0.0	0.0

Worker Category Base FTE (FTE)	FY95	FY96	FY97	FY98	FY99	FY00
Engineer/Management	156.5	218.1	167.2	65.7	9.1	2.9
Crafts	25.8	24.5	38.6	32.2	6.5	3.0
Maintenance	10.1	18.0	11.3	2.4	1.1	0.9
Operators	16.9	30.0	18.9	3.9	1.8	1.5
Infrastructure	20.8	27.5	19.0	4.6	0.9	0.5
Total	**230.2**	**318.1**	**255.0**	**108.9**	**19.4**	**8.8**

FUNCTION - ALTERNATIVE 1 RETRIEVAL	FY01	FY02	FY03	FY04	FY05
Technology Development (Test) Cost	0	0	0	0	0
Retrieve SY-101, SY-103	457,321	0	0	0	0
Perform Arm-based SST WR Demo C-106	0	1,760,159	9,588,926	656,776	0
Project W-151	0	0	0	0	0
Project W-211	0	0	0	0	0
Perform sluicing WR Demo C-106	0	0	0	0	0
Project W-340	0	0	0	0	0
Subtotal Test Costs	457,321	1,760,159	9,588,926	656,776	0
Test Oversight Costs	45,732	176,016	958,893	65,678	0
Total Retrieval Base Costs	**503,053**	**1,936,175**	**10,547,819**	**722,454**	**0**
Total Alt 1 Reddick Costs	35,000,000	105,000,000	150,000,000	155,000,000	130,000,000
Retrieval % of Total Alt 1 Reddick Costs	5	5	5	4	5
Alt 1 Retrieval Reddick Costs	**1,750,000**	**5,250,000**	**7,500,000**	**6,200,000**	**6,500,000**
Alt 1 Retrieval Actual Costs ($)	**2,253,053**	**7,186,175**	**18,047,819**	**6,922,454**	**6,500,000**

ALTERNATIVE 1 RETRIEVAL BASE COST BREAKDOWN	FY01	FY02	FY03	FY04	FY05
Activity % of Alt 1 Retrieval Base Costs (%)					
Studies/Permitting	20	30	10	10	0
Design	0	0	0	0	0
Construction/D&D	20	0	0	0	0
Operation	60	70	90	90	0
Total Percentage	**100**	**100**	**100**	**100**	**0**
Alt 1 Retrieval Activity Base Costs($)					
Studies/Permitting	100,611	580,852	1,054,782	72,245	0
Design	0	0	0	0	0
Construction/D&D	100,611	0	0	0	0
Operation	301,832	1,355,322	9,493,037	650,208	0
Total Cost	**503,053**	**1,936,175**	**10,547,819**	**722,454**	**0**

ALTERNATIVE 1 RETRIEVAL BASE FTE BREAKDOWN	FY01	FY02	FY03	FY04	FY05
Contractor Base FTE per Alt 1 Retrieval Activity (FTE)					
STUDIES/PERMITTING - Site Management/Operations	0.5	2.6	4.8	0.3	0.0
STUDIES/PERMITTING - Site Infrastructure	0.1	0.5	0.8	0.1	0.0
STUDIES/PERMITTING - National Laboratories	0.1	0.8	1.4	0.1	0.0
STUDIES/PERMITTING - Site Constructors	0.0	0.0	0.0	0.0	0.0
STUDIES/PERMITTING - Architecture/Engineering Contract	0.0	0.0	0.0	0.0	0.0
STUDIES/PERMITTING - Construction Contractor	0.0	0.0	0.0	0.0	0.0
DESIGN - Site Management/Operations	0.0	0.0	0.0	0.0	0.0
DESIGN - Site Infrastructure	0.0	0.0	0.0	0.0	0.0
DESIGN - National Laboratories	0.0	0.0	0.0	0.0	0.0
DESIGN - Site Constructors	0.0	0.0	0.0	0.0	0.0
DESIGN - Architecture/Engineering Contractors	0.0	0.0	0.0	0.0	0.0
DESIGN - Construction Contractor	0.0	0.0	0.0	0.0	0.0
CONSTRUCTION/D&D - Site Management/Operations	0.0	0.0	0.0	0.0	0.0
CONSTRUCTION/D&D - Site Infrastructure	0.0	0.0	0.0	0.0	0.0
CONSTRUCTION/D&D - National Laboratories	0.0	0.0	0.0	0.0	0.0
CONSTRUCTION/D&D - Site Constructors	0.0	0.0	0.0	0.0	0.0
CONSTRUCTION/D&D - Architecture/Engineering Contracto	0.0	0.0	0.0	0.0	0.0
CONSTRUCTION/D&D - Construction Contractor	0.6	0.0	0.0	0.0	0.0
OPERATIONS - Site Management/Operations	1.0	4.5	31.7	2.2	0.0
OPERATIONS - Site Infrastructure	0.2	0.8	5.6	0.4	0.0
OPERATIONS - National Laboratories	0.4	1.8	12.7	0.9	0.0
OPERATIONS - Site Constructors	0.0	0.0	0.0	0.0	0.0
OPERATIONS - Architecture/Engineering Contractors	0.0	0.0	0.0	0.0	0.0
OPERATIONS - Construction Contractor	0.0	0.0	0.0	0.0	0.0

Worker Category Base FTE (FTE)	FY01	FY02	FY03	FY04	FY05
Engineer/Management	1.1	4.7	15.1	1.0	0.0
Crafts	0.5	0.0	0.0	0.0	0.0
Maintenance	0.4	1.9	13.3	0.9	0.0
Operators	0.7	3.2	22.2	1.5	0.0
Infrastructure	0.3	1.3	6.4	0.4	0.0
Total	**3.0**	**11.0**	**57.1**	**3.9**	**0.0**

FUNCTION - ALTERNATIVE 1 RETRIEVAL	FY06	FY07	FY08	FY09	FY10	FY11
Technology Development (Test) Cost	0	0	0	0	0	0
Retrieve SY-101, SY-103	0	0	0	0	0	0
Perform Arm-based SST WR Demo C-106	0	0	0	0	0	0
Project W-151	0	0	0	0	0	0
Project W-211	0	0	0	0	0	0
Perform sluicing WR Demo C-106	0	0	0	0	0	0
Project W-340	0	0	0	0	0	0
Subtotal Test Costs	0	0	0	0	0	0
Test Oversight Costs	0	0	0	0	0	0
Total Retrieval Base Costs	0	0	0	0	0	0
Total Alt 1 Reddick Costs	34,000,000	34,000,000	34,000,000	24,000,000	24,000,000	
Retrieval % of Total Alt 1 Reddick Costs	5	5	5	5	5	
Alt 1 Retrieval Reddick Costs	1,700,000	1,700,000	1,700,000	1,200,000	1,200,000	0
Alt 1 Retrieval Actual Costs ($)	1,700,000	1,700,000	1,700,000	1,200,000	1,200,000	0

ALTERNATIVE 1 RETRIEVAL BASE COST BREAKDOWN	FY06	FY07	FY08	FY09	FY10	FY11
Activity % of Alt 1 Retrieval Base Costs (%)						
Studies/Permitting	0	0	0	0	0	0
Design	0	0	0	0	0	0
Construction/D&D	0	0	0	0	0	0
Operation	0	0	0	0	0	0
Total Percentage	0	0	0	0	0	0
Alt 1 Retrieval Activity Base Costs($)						
Studies/Permitting	0	0	0	0	0	0
Design	0	0	0	0	0	0
Construction/D&D	0	0	0	0	0	0
Operation	0	0	0	0	0	0
Total Cost	0	0	0	0	0	0

ALTERNATIVE 1 RETRIEVAL BASE FTE BREAKDOWN	FY06	FY07	FY08	FY09	FY10	FY11
Contractor Base FTE per Alt 1 Retrieval Activity (FTE)						
STUDIES/PERMITTING - Site Management/Operations	0.0	0.0	0.0	0.0	0.0	0.0
STUDIES/PERMITTING - Site Infrastructure	0.0	0.0	0.0	0.0	0.0	0.0
STUDIES/PERMITTING - National Laboratories	0.0	0.0	0.0	0.0	0.0	0.0
STUDIES/PERMITTING - Site Constructors	0.0	0.0	0.0	0.0	0.0	0.0
STUDIES/PERMITTING - Architecture/Engineering Contract	0.0	0.0	0.0	0.0	0.0	0.0
STUDIES/PERMITTING - Construction Contractor	0.0	0.0	0.0	0.0	0.0	0.0
DESIGN - Site Management/Operations	0.0	0.0	0.0	0.0	0.0	0.0
DESIGN - Site Infrastructure	0.0	0.0	0.0	0.0	0.0	0.0
DESIGN - National Laboratories	0.0	0.0	0.0	0.0	0.0	0.0
DESIGN - Site Constructors	0.0	0.0	0.0	0.0	0.0	0.0
DESIGN - Architecture/Engineering Contractors	0.0	0.0	0.0	0.0	0.0	0.0
DESIGN - Construction Contractor	0.0	0.0	0.0	0.0	0.0	0.0
CONSTRUCTION/D&D - Site Management/Operations	0.0	0.0	0.0	0.0	0.0	0.0
CONSTRUCTION/D&D - Site Infrastructure	0.0	0.0	0.0	0.0	0.0	0.0
CONSTRUCTION/D&D - National Laboratories	0.0	0.0	0.0	0.0	0.0	0.0
CONSTRUCTION/D&D - Site Constructors	0.0	0.0	0.0	0.0	0.0	0.0
CONSTRUCTION/D&D - Architecture/Engineering Contracto	0.0	0.0	0.0	0.0	0.0	0.0
CONSTRUCTION/D&D - Construction Contractor	0.0	0.0	0.0	0.0	0.0	0.0
OPERATIONS - Site Management/Operations	0.0	0.0	0.0	0.0	0.0	0.0
OPERATIONS - Site Infrastructure	0.0	0.0	0.0	0.0	0.0	0.0
OPERATIONS - National Laboratories	0.0	0.0	0.0	0.0	0.0	0.0
OPERATIONS - Site Constructors	0.0	0.0	0.0	0.0	0.0	0.0
OPERATIONS - Architecture/Engineering Contractors	0.0	0.0	0.0	0.0	0.0	0.0
OPERATIONS - Construction Contractor	0.0	0.0	0.0	0.0	0.0	0.0

Worker Category Base FTE (FTE)	FY06	FY07	FY08	FY09	FY10	FY11
Engineer/Management	0.0	0.0	0.0	0.0	0.0	0.0
Crafts	0.0	0.0	0.0	0.0	0.0	0.0
Maintenance	0.0	0.0	0.0	0.0	0.0	0.0
Operators	0.0	0.0	0.0	0.0	0.0	0.0
Infrastructure	0.0	0.0	0.0	0.0	0.0	0.0
Total	0.0	0.0	0.0	0.0	0.0	0.0

FUNCTION - ALTERNATIVE 1 RETRIEVAL	FY12	FY13	FY14	FY15	FY16	FY17	FY18	FY19
Technology Development (Test) Cost	0	0	0	0	0	0	0	0
Retrieve SY-101, SY-103	0	0	0	0	0	0	0	0
Perform Arm-based SST WR Demo C-106	0	0	0	0	0	0	0	0
Project W-151	0	0	0	0	0	0	0	0
Project W-211	0	0	0	0	0	0	0	0
Perform sluicing WR Demo C-106	0	0	0	0	0	0	0	0
Project W-340	0	0	0	0	0	0	0	0
Subtotal Test Costs	0	0	0	0	0	0	0	0
Test Oversight Costs	0	0	0	0	0	0	0	0
Total Retrieval Base Costs	0	0	0	0	0	0	0	0
Total Alt 1 Reddick Costs								
Retrieval % of Total Alt 1 Reddick Costs								
Alt 1 Retrieval Reddick Costs	0	0	0	0	0	0	0	0
Alt 1 Retrieval Actual Costs ($)	0	0	0	0	0	0	0	0

ALTERNATIVE 1 RETRIEVAL BASE COST BREAKDOWN	FY12	FY13	FY14	FY15	FY16	FY17	FY18	FY19
Activity % of Alt 1 Retrieval Base Costs (%)								
Studies/Permitting	0	0	0	0	0	0	0	0
Design	0	0	0	0	0	0	0	0
Construction/D&D	0	0	0	0	0	0	0	0
Operation	0	0	0	0	0	0	0	0
Total Percentage	0	0	0	0	0	0	0	0
Alt 1 Retrieval Activity Base Costs($)								
Studies/Permitting	0	0	0	0	0	0	0	0
Design	0	0	0	0	0	0	0	0
Construction/D&D	0	0	0	0	0	0	0	0
Operation	0	0	0	0	0	0	0	0
Total Cost	0	0	0	0	0	0	0	0

ALTERNATIVE 1 RETRIEVAL BASE FTE BREAKDOWN	FY12	FY13	FY14	FY15	FY16	FY17	FY18	FY19
Contractor Base FTE per Alt 1 Retrieval Activity (FTE)								
STUDIES/PERMITTING - Site Management/Operations	0.0	0.0	0.0	0.0	0.0	0.0	0.0	0.0
STUDIES/PERMITTING - Site Infrastructure	0.0	0.0	0.0	0.0	0.0	0.0	0.0	0.0
STUDIES/PERMITTING - National Laboratories	0.0	0.0	0.0	0.0	0.0	0.0	0.0	0.0
STUDIES/PERMITTING - Site Constructors	0.0	0.0	0.0	0.0	0.0	0.0	0.0	0.0
STUDIES/PERMITTING - Architecture/Engineering Contract	0.0	0.0	0.0	0.0	0.0	0.0	0.0	0.0
STUDIES/PERMITTING - Construction Contractor	0.0	0.0	0.0	0.0	0.0	0.0	0.0	0.0
DESIGN - Site Management/Operations	0.0	0.0	0.0	0.0	0.0	0.0	0.0	0.0
DESIGN - Site Infrastructure	0.0	0.0	0.0	0.0	0.0	0.0	0.0	0.0
DESIGN - National Laboratories	0.0	0.0	0.0	0.0	0.0	0.0	0.0	0.0
DESIGN - Site Constructors	0.0	0.0	0.0	0.0	0.0	0.0	0.0	0.0
DESIGN - Architecture/Engineering Contractors	0.0	0.0	0.0	0.0	0.0	0.0	0.0	0.0
DESIGN - Construction Contractor	0.0	0.0	0.0	0.0	0.0	0.0	0.0	0.0
CONSTRUCTION/D&D - Site Management/Operations	0.0	0.0	0.0	0.0	0.0	0.0	0.0	0.0
CONSTRUCTION/D&D - Site Infrastructure	0.0	0.0	0.0	0.0	0.0	0.0	0.0	0.0
CONSTRUCTION/D&D - National Laboratories	0.0	0.0	0.0	0.0	0.0	0.0	0.0	0.0
CONSTRUCTION/D&D - Site Constructors	0.0	0.0	0.0	0.0	0.0	0.0	0.0	0.0
CONSTRUCTION/D&D - Architecture/Engineering Contracto	0.0	0.0	0.0	0.0	0.0	0.0	0.0	0.0
CONSTRUCTION/D&D - Construction Contractor	0.0	0.0	0.0	0.0	0.0	0.0	0.0	0.0
OPERATIONS - Site Management/Operations	0.0	0.0	0.0	0.0	0.0	0.0	0.0	0.0
OPERATIONS - Site Infrastructure	0.0	0.0	0.0	0.0	0.0	0.0	0.0	0.0
OPERATIONS - National Laboratories	0.0	0.0	0.0	0.0	0.0	0.0	0.0	0.0
OPERATIONS - Site Constructors	0.0	0.0	0.0	0.0	0.0	0.0	0.0	0.0
OPERATIONS - Architecture/Engineering Contractors	0.0	0.0	0.0	0.0	0.0	0.0	0.0	0.0
OPERATIONS - Construction Contractor	0.0	0.0	0.0	0.0	0.0	0.0	0.0	0.0

Worker Category Base FTE (FTE)	FY12	FY13	FY14	FY15	FY16	FY17	FY18	FY19
Engineer/Management	0.0	0.0	0.0	0.0	0.0	0.0	0.0	0.0
Crafts	0.0	0.0	0.0	0.0	0.0	0.0	0.0	0.0
Maintenance	0.0	0.0	0.0	0.0	0.0	0.0	0.0	0.0
Operators	0.0	0.0	0.0	0.0	0.0	0.0	0.0	0.0
Infrastructure	0.0	0.0	0.0	0.0	0.0	0.0	0.0	0.0
Total	0.0	0.0	0.0	0.0	0.0	0.0	0.0	0.0

FUNCTION - ALTERNATIVE 1 RETRIEVAL	FY20	FY21	FY22	FY23	FY24	FY25	FY26	FY27	FY28	FY29	FY30
Technology Development (Test) Cost	0	0	0	0	0	0	0	0	0	0	0
Retrieve SY-101, SY-103	0	0	0	0	0	0	0	0	0	0	0
Perform Arm-based SST WR Demo C-106	0	0	0	0	0	0	0	0	0	0	0
Project W-151	0	0	0	0	0	0	0	0	0	0	0
Project W-211	0	0	0	0	0	0	0	0	0	0	0
Perform sluicing WR Demo C-106	0	0	0	0	0	0	0	0	0	0	0
Project W-340	0	0	0	0	0	0	0	0	0	0	0
Subtotal Test Costs	0	0	0	0	0	0	0	0	0	0	0
Test Oversight Costs	0	0	0	0	0	0	0	0	0	0	0
Total Retrieval Base Costs	0	0	0	0	0	0	0	0	0	0	0
Total Alt 1 Reddick Costs											
Retrieval % of Total Alt 1 Reddick Costs											
Alt 1 Retrieval Reddick Costs	0	0	0	0	0	0	0	0	0	0	0
Alt 1 Retrieval Actual Costs ($)	0	0	0	0	0	0	0	0	0	0	0

ALTERNATIVE 1 RETRIEVAL BASE COST BREAKDOWN	FY20	FY21	FY22	FY23	FY24	FY25	FY26	FY27	FY28	FY29	FY30
Activity % of Alt 1 Retrieval Base Costs (%)											
Studies/Permitting	0	0	0	0	0	0	0	0	0	0	0
Design	0	0	0	0	0	0	0	0	0	0	0
Construction/D&D	0	0	0	0	0	0	0	0	0	0	0
Operation	0	0	0	0	0	0	0	0	0	0	0
Total Percentage	0	0	0	0	0	0	0	0	0	0	0
Alt 1 Retrieval Activity Base Costs($)											
Studies/Permitting	0	0	0	0	0	0	0	0	0	0	0
Design	0	0	0	0	0	0	0	0	0	0	0
Construction/D&D	0	0	0	0	0	0	0	0	0	0	0
Operation	0	0	0	0	0	0	0	0	0	0	0
Total Cost	0	0	0	0	0	0	0	0	0	0	0

ALTERNATIVE 1 RETRIEVAL BASE FTE BREAKDOWN	FY20	FY21	FY22	FY23	FY24	FY25	FY26	FY27	FY28	FY29	FY30
Contractor Base FTE per Alt 1 Retrieval Activity (FTE)											
STUDIES/PERMITTING - Site Management/Operations	0.0	0.0	0.0	0.0	0.0	0.0	0.0	0.0	0.0	0.0	0.0
STUDIES/PERMITTING - Site Infrastructure	0.0	0.0	0.0	0.0	0.0	0.0	0.0	0.0	0.0	0.0	0.0
STUDIES/PERMITTING - National Laboratories	0.0	0.0	0.0	0.0	0.0	0.0	0.0	0.0	0.0	0.0	0.0
STUDIES/PERMITTING - Site Constructors	0.0	0.0	0.0	0.0	0.0	0.0	0.0	0.0	0.0	0.0	0.0
STUDIES/PERMITTING - Architecture/Engineering Contract	0.0	0.0	0.0	0.0	0.0	0.0	0.0	0.0	0.0	0.0	0.0
STUDIES/PERMITTING - Construction Contractor	0.0	0.0	0.0	0.0	0.0	0.0	0.0	0.0	0.0	0.0	0.0
DESIGN - Site Management/Operations	0.0	0.0	0.0	0.0	0.0	0.0	0.0	0.0	0.0	0.0	0.0
DESIGN - Site Infrastructure	0.0	0.0	0.0	0.0	0.0	0.0	0.0	0.0	0.0	0.0	0.0
DESIGN - National Laboratories	0.0	0.0	0.0	0.0	0.0	0.0	0.0	0.0	0.0	0.0	0.0
DESIGN - Site Constructors	0.0	0.0	0.0	0.0	0.0	0.0	0.0	0.0	0.0	0.0	0.0
DESIGN - Architecture/Engineering Contractors	0.0	0.0	0.0	0.0	0.0	0.0	0.0	0.0	0.0	0.0	0.0
DESIGN - Construction Contractor	0.0	0.0	0.0	0.0	0.0	0.0	0.0	0.0	0.0	0.0	0.0
CONSTRUCTION/D&D - Site Management/Operations	0.0	0.0	0.0	0.0	0.0	0.0	0.0	0.0	0.0	0.0	0.0
CONSTRUCTION/D&D - Site Infrastructure	0.0	0.0	0.0	0.0	0.0	0.0	0.0	0.0	0.0	0.0	0.0
CONSTRUCTION/D&D - National Laboratories	0.0	0.0	0.0	0.0	0.0	0.0	0.0	0.0	0.0	0.0	0.0
CONSTRUCTION/D&D - Site Constructors	0.0	0.0	0.0	0.0	0.0	0.0	0.0	0.0	0.0	0.0	0.0
CONSTRUCTION/D&D - Architecture/Engineering Contracto	0.0	0.0	0.0	0.0	0.0	0.0	0.0	0.0	0.0	0.0	0.0
CONSTRUCTION/D&D - Construction Contractor	0.0	0.0	0.0	0.0	0.0	0.0	0.0	0.0	0.0	0.0	0.0
OPERATIONS - Site Management/Operations	0.0	0.0	0.0	0.0	0.0	0.0	0.0	0.0	0.0	0.0	0.0
OPERATIONS - Site Infrastructure	0.0	0.0	0.0	0.0	0.0	0.0	0.0	0.0	0.0	0.0	0.0
OPERATIONS - National Laboratories	0.0	0.0	0.0	0.0	0.0	0.0	0.0	0.0	0.0	0.0	0.0
OPERATIONS - Site Constructors	0.0	0.0	0.0	0.0	0.0	0.0	0.0	0.0	0.0	0.0	0.0
OPERATIONS - Architecture/Engineering Contractors	0.0	0.0	0.0	0.0	0.0	0.0	0.0	0.0	0.0	0.0	0.0
OPERATIONS - Construction Contractor	0.0	0.0	0.0	0.0	0.0	0.0	0.0	0.0	0.0	0.0	0.0

Worker Category Base FTE (FTE)	FY20	FY21	FY22	FY23	FY24	FY25	FY26	FY27	FY28	FY29	FY30
Engineer/Management	0.0	0.0	0.0	0.0	0.0	0.0	0.0	0.0	0.0	0.0	0.0
Crafts	0.0	0.0	0.0	0.0	0.0	0.0	0.0	0.0	0.0	0.0	0.0
Maintenance	0.0	0.0	0.0	0.0	0.0	0.0	0.0	0.0	0.0	0.0	0.0
Operators	0.0	0.0	0.0	0.0	0.0	0.0	0.0	0.0	0.0	0.0	0.0
Infrastructure	0.0	0.0	0.0	0.0	0.0	0.0	0.0	0.0	0.0	0.0	0.0
Total	0.0	0.0	0.0	0.0	0.0	0.0	0.0	0.0	0.0	0.0	0.0

FUNCTION - ALTERNATIVE 1 RETRIEVAL	FY31	FY32	FY33	FY34	FY35	FY36	FY37	FY38	FY39	FY40
Technology Development (Test) Cost	0	0	0	0	0	0	0	0	0	0
Retrieve SY-101, SY-103	0	0	0	0	0	0	0	0	0	0
Perform Arm-based SST WR Demo C-106	0	0	0	0	0	0	0	0	0	0
Project W-151	0	0	0	0	0	0	0	0	0	0
Project W-211	0	0	0	0	0	0	0	0	0	0
Perform sluicing WR Demo C-106	0	0	0	0	0	0	0	0	0	0
Project W-340	0	0	0	0	0	0	0	0	0	0
Subtotal Test Costs	0	0	0	0	0	0	0	0	0	0
Test Oversight Costs	0	0	0	0	0	0	0	0	0	0
Total Retrieval Base Costs	0	0	0	0	0	0	0	0	0	0
Total Alt 1 Reddick Costs										
Retrieval % of Total Alt 1 Reddick Costs										
Alt 1 Retrieval Reddick Costs	0	0	0	0	0	0	0	0	0	0
Alt 1 Retrieval Actual Costs ($)	0	0	0	0	0	0	0	0	0	0

ALTERNATIVE 1 RETRIEVAL BASE COST BREAKDOWN	FY31	FY32	FY33	FY34	FY35	FY36	FY37	FY38	FY39	FY40
Activity % of Alt 1 Retrieval Base Costs (%)										
Studies/Permitting	0	0	0	0	0	0	0	0	0	0
Design	0	0	0	0	0	0	0	0	0	0
Construction/D&D	0	0	0	0	0	0	0	0	0	0
Operation	0	0	0	0	0	0	0	0	0	0
Total Percentage	0	0	0	0	0	0	0	0	0	0
Alt 1 Retrieval Activity Base Costs($)										
Studies/Permitting	0	0	0	0	0	0	0	0	0	0
Design	0	0	0	0	0	0	0	0	0	0
Construction/D&D	0	0	0	0	0	0	0	0	0	0
Operation	0	0	0	0	0	0	0	0	0	0
Total Cost	0	0	0	0	0	0	0	0	0	0

ALTERNATIVE 1 RETRIEVAL BASE FTE BREAKDOWN	FY31	FY32	FY33	FY34	FY35	FY36	FY37	FY38	FY39	FY40
Contractor Base FTE per Alt 1 Retrieval Activity (FTE)										
STUDIES/PERMITTING - Site Management/Operations	0.0	0.0	0.0	0.0	0.0	0.0	0.0	0.0	0.0	0.0
STUDIES/PERMITTING - Site Infrastructure	0.0	0.0	0.0	0.0	0.0	0.0	0.0	0.0	0.0	0.0
STUDIES/PERMITTING - National Laboratories	0.0	0.0	0.0	0.0	0.0	0.0	0.0	0.0	0.0	0.0
STUDIES/PERMITTING - Site Constructors	0.0	0.0	0.0	0.0	0.0	0.0	0.0	0.0	0.0	0.0
STUDIES/PERMITTING - Architecture/Engineering Contract	0.0	0.0	0.0	0.0	0.0	0.0	0.0	0.0	0.0	0.0
STUDIES/PERMITTING - Construction Contractor	0.0	0.0	0.0	0.0	0.0	0.0	0.0	0.0	0.0	0.0
DESIGN - Site Management/Operations	0.0	0.0	0.0	0.0	0.0	0.0	0.0	0.0	0.0	0.0
DESIGN - Site Infrastructure	0.0	0.0	0.0	0.0	0.0	0.0	0.0	0.0	0.0	0.0
DESIGN - National Laboratories	0.0	0.0	0.0	0.0	0.0	0.0	0.0	0.0	0.0	0.0
DESIGN - Site Constructors	0.0	0.0	0.0	0.0	0.0	0.0	0.0	0.0	0.0	0.0
DESIGN - Architecture/Engineering Contractors	0.0	0.0	0.0	0.0	0.0	0.0	0.0	0.0	0.0	0.0
DESIGN - Construction Contractor	0.0	0.0	0.0	0.0	0.0	0.0	0.0	0.0	0.0	0.0
CONSTRUCTION/D&D - Site Management/Operations	0.0	0.0	0.0	0.0	0.0	0.0	0.0	0.0	0.0	0.0
CONSTRUCTION/D&D - Site Infrastructure	0.0	0.0	0.0	0.0	0.0	0.0	0.0	0.0	0.0	0.0
CONSTRUCTION/D&D - National Laboratories	0.0	0.0	0.0	0.0	0.0	0.0	0.0	0.0	0.0	0.0
CONSTRUCTION/D&D - Site Constructors	0.0	0.0	0.0	0.0	0.0	0.0	0.0	0.0	0.0	0.0
CONSTRUCTION/D&D - Architecture/Engineering Contracto	0.0	0.0	0.0	0.0	0.0	0.0	0.0	0.0	0.0	0.0
CONSTRUCTION/D&D - Construction Contractor	0.0	0.0	0.0	0.0	0.0	0.0	0.0	0.0	0.0	0.0
OPERATIONS - Site Management/Operations	0.0	0.0	0.0	0.0	0.0	0.0	0.0	0.0	0.0	0.0
OPERATIONS - Site Infrastructure	0.0	0.0	0.0	0.0	0.0	0.0	0.0	0.0	0.0	0.0
OPERATIONS - National Laboratories	0.0	0.0	0.0	0.0	0.0	0.0	0.0	0.0	0.0	0.0
OPERATIONS - Site Constructors	0.0	0.0	0.0	0.0	0.0	0.0	0.0	0.0	0.0	0.0
OPERATIONS - Architecture/Engineering Contractors	0.0	0.0	0.0	0.0	0.0	0.0	0.0	0.0	0.0	0.0
OPERATIONS - Construction Contractor	0.0	0.0	0.0	0.0	0.0	0.0	0.0	0.0	0.0	0.0

Worker Category Base FTE (FTE)	FY31	FY32	FY33	FY34	FY35	FY36	FY37	FY38	FY39	FY40
Engineer/Management	0.0	0.0	0.0	0.0	0.0	0.0	0.0	0.0	0.0	0.0
Crafts	0.0	0.0	0.0	0.0	0.0	0.0	0.0	0.0	0.0	0.0
Maintenance	0.0	0.0	0.0	0.0	0.0	0.0	0.0	0.0	0.0	0.0
Operators	0.0	0.0	0.0	0.0	0.0	0.0	0.0	0.0	0.0	0.0
Infrastructure	0.0	0.0	0.0	0.0	0.0	0.0	0.0	0.0	0.0	0.0
Total	0.0	0.0	0.0	0.0	0.0	0.0	0.0	0.0	0.0	0.0

FUNCTION - ALTERNATIVE 1 RETRIEVAL	Totals
Technology Development (Test) Cost	42,515,879
Retrieve SY-101, SY-103	2,551,921
Perform Arm-based SST WR Demo C-106	12,005,861
Project W-151	14,076,773
Project W-211	54,507,001
Perform sluicing WR Demo C-106	9,652,350
Project W-340	12,608,924
Subtotal Test Costs	147,918,709
Test Oversight Costs	14,791,871
Total Retrieval Base Costs	162,710,580
Total Alt 1 Reddick Costs	815,000,000
Retrieval % of Total Alt 1 Reddick Costs	79
Alt 1 Retrieval Reddick Costs	39,200,000
Alt 1 Retrieval Actual Costs ($)	201,910,580

ALTERNATIVE 1 RETRIEVAL BASE COST BREAKDOWN

Activity % of Alt 1 Retrieval Base Costs (%)	
Studies/Permitting	
Design	
Construction/D&D	
Operation	
Total Percentage	

Alt 1 Retrieval Activity Base Costs($)	Totals
Studies/Permitting	64,826,682
Design	27,450,875
Construction/D&D	27,451,577
Operation	42,981,446
Total Cost	162,710,580

ALTERNATIVE 1 RETRIEVAL BASE FTE BREAKDOWN	Totals
Contractor Base FTE per Alt 1 Retrieval Activity (FTE)	
STUDIES/PERMITTING - Site Management/Operations	295.2
STUDIES/PERMITTING - Site Infrastructure	52.1
STUDIES/PERMITTING - National Laboratories	87.0
STUDIES/PERMITTING - Site Constructors	0.0
STUDIES/PERMITTING - Architecture/Engineering Contract	0.0
STUDIES/PERMITTING - Construction Contractor	0.0
DESIGN - Site Management/Operations	16.7
DESIGN - Site Infrastructure	2.9
DESIGN - National Laboratories	14.7
DESIGN - Site Constructors	9.8
DESIGN - Architecture/Engineering Contractors	114.4
DESIGN - Construction Contractor	0.0
CONSTRUCTION/D&D - Site Management/Operations	8.3
CONSTRUCTION/D&D - Site Infrastructure	1.5
CONSTRUCTION/D&D - National Laboratories	7.4
CONSTRUCTION/D&D - Site Constructors	9.8
CONSTRUCTION/D&D - Architecture/Engineering Contracto	7.6
CONSTRUCTION/D&D - Construction Contractor	161.5
OPERATIONS - Site Management/Operations	143.5
OPERATIONS - Site Infrastructure	25.3
OPERATIONS - National Laboratories	57.7
OPERATIONS - Site Constructors	0.0
OPERATIONS - Architecture/Engineering Contractors	0.0
OPERATIONS - Construction Contractor	0.0

Worker Category Base FTE (FTE)	Totals
Engineer/Management	641.4
Crafts	131.1
Maintenance	60.4
Operators	100.6
Infrastructure	81.8
Total	1,015.4

ALTERNATIVE 1 RETRIEVAL REDDICK COST BREAKDOWN	FY95	FY96	FY97	FY98	FY99	FY00
Activity % of Alt 1 Retrieval Reddick Costs (%)						
Studies/Permitting	100	100	100	0	0	0
Design	0	0	0	100	100	100
Construction/D&D	0	0	0	0	0	0
Operation	0	0	0	0	0	0
Total Percentage	100	100	100	100	100	100
Alt 1 Retrieval Activity Reddick Costs($)						
Studies/Permitting	100,000	100,000	300,000	0	0	0
Design	0	0	0	500,000	1,750,000	1,750,000
Construction/D&D	0	0	0	0	0	0
Operation	0	0	0	0	0	0
Total Cost	100,000	100,000	300,000	500,000	1,750,000	1,750,000

ALTERNATIVE 1 RETRIEVAL REDDICK FTE BREAKDOWN	FY95	FY96	FY97	FY98	FY99	FY00
Contractor Reddick FTE per Alt 1 Retrieval Activity (FTE)						
STUDIES/PERMITTING - Site Management/Operations	0.6	0.6	1.7	0.0	0.0	0.0
STUDIES/PERMITTING - Site Infrastructure	0.1	0.1	0.3	0.0	0.0	0.0
STUDIES/PERMITTING - National Laboratories	0.0	0.0	0.1	0.0	0.0	0.0
STUDIES/PERMITTING - Site Constructors	0.0	0.0	0.0	0.0	0.0	0.0
STUDIES/PERMITTING - Architecture/Engineering Contract	0.0	0.0	0.0	0.0	0.0	0.0
STUDIES/PERMITTING - Construction Contractor	0.0	0.0	0.0	0.0	0.0	0.0
DESIGN - Site Management/Operations	0.0	0.0	0.0	0.3	1.1	1.1
DESIGN - Site Infrastructure	0.0	0.0	0.0	0.1	0.2	0.2
DESIGN - National Laboratories	0.0	0.0	0.0	0.3	0.9	0.9
DESIGN - Site Constructors	0.0	0.0	0.0	0.2	0.6	0.6
DESIGN - Architecture/Engineering Contractors	0.0	0.0	0.0	2.1	7.3	7.3
DESIGN - Construction Contractor	0.0	0.0	0.0	0.0	0.0	0.0
CONSTRUCTION/D&D - Site Management/Operations	0.0	0.0	0.0	0.0	0.0	0.0
CONSTRUCTION/D&D - Site Infrastructure	0.0	0.0	0.0	0.0	0.0	0.0
CONSTRUCTION/D&D - National Laboratories	0.0	0.0	0.0	0.0	0.0	0.0
CONSTRUCTION/D&D - Site Constructors	0.0	0.0	0.0	0.0	0.0	0.0
CONSTRUCTION/D&D - Architecture/Engineering Contracto	0.0	0.0	0.0	0.0	0.0	0.0
CONSTRUCTION/D&D - Construction Contractor	0.0	0.0	0.0	0.0	0.0	0.0
OPERATIONS - Site Management/Operations	0.0	0.0	0.0	0.0	0.0	0.0
OPERATIONS - Site Infrastructure	0.0	0.0	0.0	0.0	0.0	0.0
OPERATIONS - National Laboratories	0.0	0.0	0.0	0.0	0.0	0.0
OPERATIONS - Site Constructors	0.0	0.0	0.0	0.0	0.0	0.0
OPERATIONS - Architecture/Engineering Contractors	0.0	0.0	0.0	0.0	0.0	0.0
OPERATIONS - Construction Contractor	0.0	0.0	0.0	0.0	0.0	0.0
Worker Category Reddick FTE (FTE)						
Engineer/Management	0.6	0.6	1.8	2.8	9.9	9.9
Crafts	0.0	0.0	0.0	0.0	0.0	0.0
Maintenance	0.0	0.0	0.0	0.0	0.0	0.0
Operators	0.0	0.0	0.0	0.0	0.0	0.0
Infrastructure	0.1	0.1	0.3	0.1	0.2	0.2
Total	0.7	0.7	2.1	2.9	10.1	10.1

ALTERNATIVE 1 RETRIEVAL COST SUMMARY	FY95	FY96	FY97	FY98	FY99	FY00
Studies/Permitting	19,919,773	23,183,298	16,446,658	3,373,595	454,329	140,548
Design	3,603,595	10,259,244	8,073,329	5,560,377	2,204,329	1,750,000
Construction/D&D	5,405,393	5,129,622	8,073,329	6,747,169	1,382,988	632,464
Operation	7,207,190	12,824,055	8,073,329	1,686,792	757,216	632,464
Total	36,135,952	51,396,219	40,666,646	17,367,924	4,778,863	3,155,477

ALTERNATIVE 1 RETRIEVAL FTE SUMMARY	FY95	FY96	FY97	FY98	FY99	FY00
Engineer/Management	157.1	219.7	169.0	68.6	19.0	12.8
Crafts	25.8	24.5	38.6	32.2	6.5	3.0
Maintenance	10.1	18.0	11.3	2.4	1.1	0.9
Operators	16.9	30.0	18.9	3.9	1.8	1.5
Infrastructure	21.0	27.6	19.3	4.7	1.1	0.7
Total	230.9	318.8	257.1	111.8	29.5	18.9

ALTERNATIVE 1 RETRIEVAL REDDICK COST BREAKDOWN	FY01	FY02	FY03	FY04	FY05
Activity % of Alt 1 Retrieval Reddick Costs (%)					
Studies/Permitting	0	0	0	0	0
Design	0	0	0	0	0
Construction/D&D	100	100	100	0	0
Operation	0	0	0	100	100
Total Percentage	100	100	100	100	100
Alt 1 Retrieval Activity Reddick Costs($)					
Studies/Permitting	0	0	0	0	0
Design	0	0	0	0	0
Construction/D&D	1,750,000	5,250,000	7,500,000	0	0
Operation	0	0	0	6,200,000	6,500,000
Total Cost	1,750,000	5,250,000	7,500,000	6,200,000	6,500,000

ALTERNATIVE 1 RETRIEVAL REDDICK FTE BREAKDOWN	FY01	FY02	FY03	FY04	FY05
Contractor Reddick FTE per Alt 1 Retrieval Activity (FTE)					
STUDIES/PERMITTING - Site Management/Operations	0.0	0.0	0.0	0.0	0.0
STUDIES/PERMITTING - Site Infrastructure	0.0	0.0	0.0	0.0	0.0
STUDIES/PERMITTING - National Laboratories	0.0	0.0	0.0	0.0	0.0
STUDIES/PERMITTING - Site Constructors	0.0	0.0	0.0	0.0	0.0
STUDIES/PERMITTING - Architecture/Engineering Contract	0.0	0.0	0.0	0.0	0.0
STUDIES/PERMITTING - Construction Contractor	0.0	0.0	0.0	0.0	0.0
DESIGN - Site Management/Operations	0.0	0.0	0.0	0.0	0.0
DESIGN - Site Infrastructure	0.0	0.0	0.0	0.0	0.0
DESIGN - National Laboratories	0.0	0.0	0.0	0.0	0.0
DESIGN - Site Constructors	0.0	0.0	0.0	0.0	0.0
DESIGN - Architecture/Engineering Contractors	0.0	0.0	0.0	0.0	0.0
DESIGN - Construction Contractor	0.0	0.0	0.0	0.0	0.0
CONSTRUCTION/D&D - Site Management/Operations	1.1	3.2	4.6	0.0	0.0
CONSTRUCTION/D&D - Site Infrastructure	0.2	0.6	0.8	0.0	0.0
CONSTRUCTION/D&D - National Laboratories	0.0	0.0	0.0	0.0	0.0
CONSTRUCTION/D&D - Site Constructors	0.6	1.9	2.7	0.0	0.0
CONSTRUCTION/D&D - Architecture/Engineering Contracto	0.5	1.5	2.1	0.0	0.0
CONSTRUCTION/D&D - Construction Contractor	10.3	30.9	44.1	0.0	0.0
OPERATIONS - Site Management/Operations	0.0	0.0	0.0	26.4	27.6
OPERATIONS - Site Infrastructure	0.0	0.0	0.0	4.7	4.9
OPERATIONS - National Laboratories	0.0	0.0	0.0	3.3	3.5
OPERATIONS - Site Constructors	0.0	0.0	0.0	0.0	0.0
OPERATIONS - Architecture/Engineering Contractors	0.0	0.0	0.0	0.0	0.0
OPERATIONS - Construction Contractor	0.0	0.0	0.0	0.0	0.0
Worker Category Reddick FTE (FTE)					
Engineer/Management	4.1	12.3	17.6	5.9	6.2
Crafts	8.4	25.1	35.8	0.0	0.0
Maintenance	0.0	0.0	0.0	8.9	9.3
Operators	0.0	0.0	0.0	14.8	15.6
Infrastructure	0.2	0.6	0.8	4.7	4.9
Total	12.7	38.0	54.2	34.3	36.0

ALTERNATIVE 1 RETRIEVAL COST SUMMARY	FY01	FY02	FY03	FY04	FY05
Studies/Permitting	100,611	580,852	1,054,782	72,245	0
Design	0	0	0	0	0
Construction/D&D	1,850,611	5,250,000	7,500,000	0	0
Operation	301,832	1,355,322	9,493,037	6,850,208	6,500,000
Total	2,253,053	7,186,175	18,047,819	6,922,454	6,500,000

ALTERNATIVE 1 RETRIEVAL FTE SUMMARY	FY01	FY02	FY03	FY04	FY05
Engineer/Management	5.2	17.0	32.7	7.0	6.2
Crafts	8.8	25.1	35.8	0.0	0.0
Maintenance	0.4	1.9	13.3	9.8	9.3
Operators	0.7	3.2	22.2	16.4	15.6
Infrastructure	0.5	1.8	7.2	5.1	4.9
Total	15.6	49.0	111.3	38.2	36.0

ALTERNATIVE 1 RETRIEVAL REDDICK COST BREAKDOWN	FY06	FY07	FY08	FY09	FY10	FY11
Activity % of Alt 1 Retrieval Reddick Costs (%)						
Studies/Permitting	0	0	0	0	0	0
Design	0	0	0	0	0	0
Construction/D&D	0	0	0	0	0	0
Operation	100	100	100	100	100	0
Total Percentage	100	100	100	100	100	0
Alt 1 Retrieval Activity Reddick Costs($)						
Studies/Permitting	0	0	0	0	0	0
Design	0	0	0	0	0	0
Construction/D&D	0	0	0	0	0	0
Operation	1,700,000	1,700,000	1,700,000	1,200,000	1,200,000	0
Total Cost	1,700,000	1,700,000	1,700,000	1,200,000	1,200,000	0

ALTERNATIVE 1 RETRIEVAL REDDICK FTE BREAKDOWN	FY06	FY07	FY08	FY09	FY10	FY11
Contractor Reddick FTE per Alt 1 Retrieval Activity (FTE)						
STUDIES/PERMITTING - Site Management/Operations	0.0	0.0	0.0	0.0	0.0	0.0
STUDIES/PERMITTING - Site Infrastructure	0.0	0.0	0.0	0.0	0.0	0.0
STUDIES/PERMITTING - National Laboratories	0.0	0.0	0.0	0.0	0.0	0.0
STUDIES/PERMITTING - Site Constructors	0.0	0.0	0.0	0.0	0.0	0.0
STUDIES/PERMITTING - Architecture/Engineering Contract	0.0	0.0	0.0	0.0	0.0	0.0
STUDIES/PERMITTING - Construction Contractor	0.0	0.0	0.0	0.0	0.0	0.0
DESIGN - Site Management/Operations	0.0	0.0	0.0	0.0	0.0	0.0
DESIGN - Site Infrastructure	0.0	0.0	0.0	0.0	0.0	0.0
DESIGN - National Laboratories	0.0	0.0	0.0	0.0	0.0	0.0
DESIGN - Site Constructors	0.0	0.0	0.0	0.0	0.0	0.0
DESIGN - Architecture/Engineering Contractors	0.0	0.0	0.0	0.0	0.0	0.0
DESIGN - Construction Contractor	0.0	0.0	0.0	0.0	0.0	0.0
CONSTRUCTION/D&D - Site Management/Operations	0.0	0.0	0.0	0.0	0.0	0.0
CONSTRUCTION/D&D - Site Infrastructure	0.0	0.0	0.0	0.0	0.0	0.0
CONSTRUCTION/D&D - National Laboratories	0.0	0.0	0.0	0.0	0.0	0.0
CONSTRUCTION/D&D - Site Constructors	0.0	0.0	0.0	0.0	0.0	0.0
CONSTRUCTION/D&D - Architecture/Engineering Contracto	0.0	0.0	0.0	0.0	0.0	0.0
CONSTRUCTION/D&D - Construction Contractor	0.0	0.0	0.0	0.0	0.0	0.0
OPERATIONS - Site Management/Operations	7.2	7.2	7.2	5.1	5.1	0.0
OPERATIONS - Site Infrastructure	1.3	1.3	1.3	0.9	0.9	0.0
OPERATIONS - National Laboratories	0.9	0.9	0.9	0.6	0.6	0.0
OPERATIONS - Site Constructors	0.0	0.0	0.0	0.0	0.0	0.0
OPERATIONS - Architecture/Engineering Contractors	0.0	0.0	0.0	0.0	0.0	0.0
OPERATIONS - Construction Contractor	0.0	0.0	0.0	0.0	0.0	0.0
Worker Category Reddick FTE (FTE)						
Engineer/Management	1.6	1.6	1.6	1.1	1.1	0.0
Crafts	0.0	0.0	0.0	0.0	0.0	0.0
Maintenance	2.4	2.4	2.4	1.7	1.7	0.0
Operators	4.1	4.1	4.1	2.9	2.9	0.0
Infrastructure	1.3	1.3	1.3	0.9	0.9	0.0
Total	9.4	9.4	9.4	6.6	6.6	0.0

ALTERNATIVE 1 RETRIEVAL COST SUMMARY	FY06	FY07	FY08	FY09	FY10	FY11
Studies/Permitting	0	0	0	0	0	0
Design	0	0	0	0	0	0
Construction/D&D	0	0	0	0	0	0
Operation	1,700,000	1,700,000	1,700,000	1,200,000	1,200,000	0
Total	1,700,000	1,700,000	1,700,000	1,200,000	1,200,000	0

ALTERNATIVE 1 RETRIEVAL FTE SUMMARY	FY06	FY07	FY08	FY09	FY10	FY11
Engineer/Management	1.6	1.6	1.6	1.1	1.1	0.0
Crafts	0.0	0.0	0.0	0.0	0.0	0.0
Maintenance	2.4	2.4	2.4	1.7	1.7	0.0
Operators	4.1	4.1	4.1	2.9	2.9	0.0
Infrastructure	1.3	1.3	1.3	0.9	0.9	0.0
Total	9.4	9.4	9.4	6.6	6.6	0.0

ALTERNATIVE 1 RETRIEVAL REDDICK COST BREAKDOWN	FY12	FY13	FY14	FY15	FY16	FY17	FY18	FY19
Activity % of Alt 1 Retrieval Reddick Costs (%)								
Studies/Permitting	0	0	0	0	0	0	0	0
Design	0	0	0	0	0	0	0	0
Construction/D&D	0	0	0	0	0	0	0	0
Operation	0	0	0	0	0	0	0	0
Total Percentage	0	0	0	0	0	0	0	0
Alt 1 Retrieval Activity Reddick Costs($)								
Studies/Permitting	0	0	0	0	0	0	0	0
Design	0	0	0	0	0	0	0	0
Construction/D&D	0	0	0	0	0	0	0	0
Operation	0	0	0	0	0	0	0	0
Total Cost	0	0	0	0	0	0	0	0

ALTERNATIVE 1 RETRIEVAL REDDICK FTE BREAKDOWN	FY12	FY13	FY14	FY15	FY16	FY17	FY18	FY19
Contractor Reddick FTE per Alt 1 Retrieval Activity (FTE)								
STUDIES/PERMITTING - Site Management/Operations	0.0	0.0	0.0	0.0	0.0	0.0	0.0	0.0
STUDIES/PERMITTING - Site Infrastructure	0.0	0.0	0.0	0.0	0.0	0.0	0.0	0.0
STUDIES/PERMITTING - National Laboratories	0.0	0.0	0.0	0.0	0.0	0.0	0.0	0.0
STUDIES/PERMITTING - Site Constructors	0.0	0.0	0.0	0.0	0.0	0.0	0.0	0.0
STUDIES/PERMITTING - Architecture/Engineering Contract	0.0	0.0	0.0	0.0	0.0	0.0	0.0	0.0
STUDIES/PERMITTING - Construction Contractor	0.0	0.0	0.0	0.0	0.0	0.0	0.0	0.0
DESIGN - Site Management/Operations	0.0	0.0	0.0	0.0	0.0	0.0	0.0	0.0
DESIGN - Site Infrastructure	0.0	0.0	0.0	0.0	0.0	0.0	0.0	0.0
DESIGN - National Laboratories	0.0	0.0	0.0	0.0	0.0	0.0	0.0	0.0
DESIGN - Site Constructors	0.0	0.0	0.0	0.0	0.0	0.0	0.0	0.0
DESIGN - Architecture/Engineering Contractors	0.0	0.0	0.0	0.0	0.0	0.0	0.0	0.0
DESIGN - Construction Contractor	0.0	0.0	0.0	0.0	0.0	0.0	0.0	0.0
CONSTRUCTION/D&D - Site Management/Operations	0.0	0.0	0.0	0.0	0.0	0.0	0.0	0.0
CONSTRUCTION/D&D - Site Infrastructure	0.0	0.0	0.0	0.0	0.0	0.0	0.0	0.0
CONSTRUCTION/D&D - National Laboratories	0.0	0.0	0.0	0.0	0.0	0.0	0.0	0.0
CONSTRUCTION/D&D - Site Constructors	0.0	0.0	0.0	0.0	0.0	0.0	0.0	0.0
CONSTRUCTION/D&D - Architecture/Engineering Contracto	0.0	0.0	0.0	0.0	0.0	0.0	0.0	0.0
CONSTRUCTION/D&D - Construction Contractor	0.0	0.0	0.0	0.0	0.0	0.0	0.0	0.0
OPERATIONS - Site Management/Operations	0.0	0.0	0.0	0.0	0.0	0.0	0.0	0.0
OPERATIONS - Site Infrastructure	0.0	0.0	0.0	0.0	0.0	0.0	0.0	0.0
OPERATIONS - National Laboratories	0.0	0.0	0.0	0.0	0.0	0.0	0.0	0.0
OPERATIONS - Site Constructors	0.0	0.0	0.0	0.0	0.0	0.0	0.0	0.0
OPERATIONS - Architecture/Engineering Contractors	0.0	0.0	0.0	0.0	0.0	0.0	0.0	0.0
OPERATIONS - Construction Contractor	0.0	0.0	0.0	0.0	0.0	0.0	0.0	0.0
Worker Category Reddick FTE (FTE)								
Engineer/Management	0.0	0.0	0.0	0.0	0.0	0.0	0.0	0.0
Crafts	0.0	0.0	0.0	0.0	0.0	0.0	0.0	0.0
Maintenance	0.0	0.0	0.0	0.0	0.0	0.0	0.0	0.0
Operators	0.0	0.0	0.0	0.0	0.0	0.0	0.0	0.0
Infrastructure	0.0	0.0	0.0	0.0	0.0	0.0	0.0	0.0
Total	0.0	0.0	0.0	0.0	0.0	0.0	0.0	0.0

ALTERNATIVE 1 RETRIEVAL COST SUMMARY	FY12	FY13	FY14	FY15	FY16	FY17	FY18	FY19
Studies/Permitting	0	0	0	0	0	0	0	0
Design	0	0	0	0	0	0	0	0
Construction/D&D	0	0	0	0	0	0	0	0
Operation	0	0	0	0	0	0	0	0
Total	0	0	0	0	0	0	0	0

ALTERNATIVE 1 RETRIEVAL FTE SUMMARY	FY12	FY13	FY14	FY15	FY16	FY17	FY18	FY19
Engineer/Management	0.0	0.0	0.0	0.0	0.0	0.0	0.0	0.0
Crafts	0.0	0.0	0.0	0.0	0.0	0.0	0.0	0.0
Maintenance	0.0	0.0	0.0	0.0	0.0	0.0	0.0	0.0
Operators	0.0	0.0	0.0	0.0	0.0	0.0	0.0	0.0
Infrastructure	0.0	0.0	0.0	0.0	0.0	0.0	0.0	0.0
Total	0.0	0.0	0.0	0.0	0.0	0.0	0.0	0.0

ALTERNATIVE 1 RETRIEVAL REDDICK COST BREAKDOWN	FY20	FY21	FY22	FY23	FY24	FY25	FY26	FY27	FY28	FY29	FY30
Activity % of Alt 1 Retrieval Reddick Costs (%)											
Studies/Permitting	0	0	0	0	0	0	0	0	0	0	0
Design	0	0	0	0	0	0	0	0	0	0	0
Construction/D&D	0	0	0	0	0	0	0	0	0	0	0
Operation	0	0	0	0	0	0	0	0	0	0	0
Total Percentage	0	0	0	0	0	0	0	0	0	0	0
Alt 1 Retrieval Activity Reddick Costs($)											
Studies/Permitting	0	0	0	0	0	0	0	0	0	0	0
Design	0	0	0	0	0	0	0	0	0	0	0
Construction/D&D	0	0	0	0	0	0	0	0	0	0	0
Operation	0	0	0	0	0	0	0	0	0	0	0
Total Cost	0	0	0	0	0	0	0	0	0	0	0

ALTERNATIVE 1 RETRIEVAL REDDICK FTE BREAKDOWN	FY20	FY21	FY22	FY23	FY24	FY25	FY26	FY27	FY28	FY29	FY30
Contractor Reddick FTE per Alt 1 Retrieval Activity (FTE)											
STUDIES/PERMITTING - Site Management/Operations	0.0	0.0	0.0	0.0	0.0	0.0	0.0	0.0	0.0	0.0	0.0
STUDIES/PERMITTING - Site Infrastructure	0.0	0.0	0.0	0.0	0.0	0.0	0.0	0.0	0.0	0.0	0.0
STUDIES/PERMITTING - National Laboratories	0.0	0.0	0.0	0.0	0.0	0.0	0.0	0.0	0.0	0.0	0.0
STUDIES/PERMITTING - Site Constructors	0.0	0.0	0.0	0.0	0.0	0.0	0.0	0.0	0.0	0.0	0.0
STUDIES/PERMITTING - Architecture/Engineering Contract	0.0	0.0	0.0	0.0	0.0	0.0	0.0	0.0	0.0	0.0	0.0
STUDIES/PERMITTING - Construction Contractor	0.0	0.0	0.0	0.0	0.0	0.0	0.0	0.0	0.0	0.0	0.0
DESIGN - Site Management/Operations	0.0	0.0	0.0	0.0	0.0	0.0	0.0	0.0	0.0	0.0	0.0
DESIGN - Site Infrastructure	0.0	0.0	0.0	0.0	0.0	0.0	0.0	0.0	0.0	0.0	0.0
DESIGN - National Laboratories	0.0	0.0	0.0	0.0	0.0	0.0	0.0	0.0	0.0	0.0	0.0
DESIGN - Site Constructors	0.0	0.0	0.0	0.0	0.0	0.0	0.0	0.0	0.0	0.0	0.0
DESIGN - Architecture/Engineering Contractors	0.0	0.0	0.0	0.0	0.0	0.0	0.0	0.0	0.0	0.0	0.0
DESIGN - Construction Contractor	0.0	0.0	0.0	0.0	0.0	0.0	0.0	0.0	0.0	0.0	0.0
CONSTRUCTION/D&D - Site Management/Operations	0.0	0.0	0.0	0.0	0.0	0.0	0.0	0.0	0.0	0.0	0.0
CONSTRUCTION/D&D - Site Infrastructure	0.0	0.0	0.0	0.0	0.0	0.0	0.0	0.0	0.0	0.0	0.0
CONSTRUCTION/D&D - National Laboratories	0.0	0.0	0.0	0.0	0.0	0.0	0.0	0.0	0.0	0.0	0.0
CONSTRUCTION/D&D - Site Constructors	0.0	0.0	0.0	0.0	0.0	0.0	0.0	0.0	0.0	0.0	0.0
CONSTRUCTION/D&D - Architecture/Engineering Contracto	0.0	0.0	0.0	0.0	0.0	0.0	0.0	0.0	0.0	0.0	0.0
CONSTRUCTION/D&D - Construction Contractor	0.0	0.0	0.0	0.0	0.0	0.0	0.0	0.0	0.0	0.0	0.0
OPERATIONS - Site Management/Operations	0.0	0.0	0.0	0.0	0.0	0.0	0.0	0.0	0.0	0.0	0.0
OPERATIONS - Site Infrastructure	0.0	0.0	0.0	0.0	0.0	0.0	0.0	0.0	0.0	0.0	0.0
OPERATIONS - National Laboratories	0.0	0.0	0.0	0.0	0.0	0.0	0.0	0.0	0.0	0.0	0.0
OPERATIONS - Site Constructors	0.0	0.0	0.0	0.0	0.0	0.0	0.0	0.0	0.0	0.0	0.0
OPERATIONS - Architecture/Engineering Contractors	0.0	0.0	0.0	0.0	0.0	0.0	0.0	0.0	0.0	0.0	0.0
OPERATIONS - Construction Contractor	0.0	0.0	0.0	0.0	0.0	0.0	0.0	0.0	0.0	0.0	0.0
Worker Category Reddick FTE (FTE)											
Engineer/Management	0.0	0.0	0.0	0.0	0.0	0.0	0.0	0.0	0.0	0.0	0.0
Crafts	0.0	0.0	0.0	0.0	0.0	0.0	0.0	0.0	0.0	0.0	0.0
Maintenance	0.0	0.0	0.0	0.0	0.0	0.0	0.0	0.0	0.0	0.0	0.0
Operators	0.0	0.0	0.0	0.0	0.0	0.0	0.0	0.0	0.0	0.0	0.0
Infrastructure	0.0	0.0	0.0	0.0	0.0	0.0	0.0	0.0	0.0	0.0	0.0
Total	0.0	0.0	0.0	0.0	0.0	0.0	0.0	0.0	0.0	0.0	0.0

ALTERNATIVE 1 RETRIEVAL COST SUMMARY	FY20	FY21	FY22	FY23	FY24	FY25	FY26	FY27	FY28	FY29	FY30
Studies/Permitting	0	0	0	0	0	0	0	0	0	0	0
Design	0	0	0	0	0	0	0	0	0	0	0
Construction/D&D	0	0	0	0	0	0	0	0	0	0	0
Operation	0	0	0	0	0	0	0	0	0	0	0
Total	0	0	0	0	0	0	0	0	0	0	0

ALTERNATIVE 1 RETRIEVAL FTE SUMMARY	FY20	FY21	FY22	FY23	FY24	FY25	FY26	FY27	FY28	FY29	FY30
Engineer/Management	0.0	0.0	0.0	0.0	0.0	0.0	0.0	0.0	0.0	0.0	0.0
Crafts	0.0	0.0	0.0	0.0	0.0	0.0	0.0	0.0	0.0	0.0	0.0
Maintenance	0.0	0.0	0.0	0.0	0.0	0.0	0.0	0.0	0.0	0.0	0.0
Operators	0.0	0.0	0.0	0.0	0.0	0.0	0.0	0.0	0.0	0.0	0.0
Infrastructure	0.0	0.0	0.0	0.0	0.0	0.0	0.0	0.0	0.0	0.0	0.0
Total	0.0	0.0	0.0	0.0	0.0	0.0	0.0	0.0	0.0	0.0	0.0

ALTERNATIVE 1 RETRIEVAL REDDICK COST BREAKDOWN	FY31	FY32	FY33	FY34	FY35	FY36	FY37	FY38	FY39	FY40
Activity % of Alt 1 Retrieval Reddick Costs (%)										
Studies/Permitting	0	0	0	0	0	0	0	0	0	0
Design	0	0	0	0	0	0	0	0	0	0
Construction/D&D	0	0	0	0	0	0	0	0	0	0
Operation	0	0	0	0	0	0	0	0	0	0
Total Percentage	0	0	0	0	0	0	0	0	0	0
Alt 1 Retrieval Activity Reddick Costs($)										
Studies/Permitting	0	0	0	0	0	0	0	0	0	0
Design	0	0	0	0	0	0	0	0	0	0
Construction/D&D	0	0	0	0	0	0	0	0	0	0
Operation	0	0	0	0	0	0	0	0	0	0
Total Cost	0	0	0	0	0	0	0	0	0	0

ALTERNATIVE 1 RETRIEVAL REDDICK FTE BREAKDOWN	FY31	FY32	FY33	FY34	FY35	FY36	FY37	FY38	FY39	FY40
Contractor Reddick FTE per Alt 1 Retrieval Activity (FTE)										
STUDIES/PERMITTING - Site Management/Operations	0.0	0.0	0.0	0.0	0.0	0.0	0.0	0.0	0.0	0.0
STUDIES/PERMITTING - Site Infrastructure	0.0	0.0	0.0	0.0	0.0	0.0	0.0	0.0	0.0	0.0
STUDIES/PERMITTING - National Laboratories	0.0	0.0	0.0	0.0	0.0	0.0	0.0	0.0	0.0	0.0
STUDIES/PERMITTING - Site Constructors	0.0	0.0	0.0	0.0	0.0	0.0	0.0	0.0	0.0	0.0
STUDIES/PERMITTING - Architecture/Engineering Contract	0.0	0.0	0.0	0.0	0.0	0.0	0.0	0.0	0.0	0.0
STUDIES/PERMITTING - Construction Contractor	0.0	0.0	0.0	0.0	0.0	0.0	0.0	0.0	0.0	0.0
DESIGN - Site Management/Operations	0.0	0.0	0.0	0.0	0.0	0.0	0.0	0.0	0.0	0.0
DESIGN - Site Infrastructure	0.0	0.0	0.0	0.0	0.0	0.0	0.0	0.0	0.0	0.0
DESIGN - National Laboratories	0.0	0.0	0.0	0.0	0.0	0.0	0.0	0.0	0.0	0.0
DESIGN - Site Constructors	0.0	0.0	0.0	0.0	0.0	0.0	0.0	0.0	0.0	0.0
DESIGN - Architecture/Engineering Contractors	0.0	0.0	0.0	0.0	0.0	0.0	0.0	0.0	0.0	0.0
DESIGN - Construction Contractor	0.0	0.0	0.0	0.0	0.0	0.0	0.0	0.0	0.0	0.0
CONSTRUCTION/D&D - Site Management/Operations	0.0	0.0	0.0	0.0	0.0	0.0	0.0	0.0	0.0	0.0
CONSTRUCTION/D&D - Site Infrastructure	0.0	0.0	0.0	0.0	0.0	0.0	0.0	0.0	0.0	0.0
CONSTRUCTION/D&D - National Laboratories	0.0	0.0	0.0	0.0	0.0	0.0	0.0	0.0	0.0	0.0
CONSTRUCTION/D&D - Site Constructors	0.0	0.0	0.0	0.0	0.0	0.0	0.0	0.0	0.0	0.0
CONSTRUCTION/D&D - Architecture/Engineering Contracto	0.0	0.0	0.0	0.0	0.0	0.0	0.0	0.0	0.0	0.0
CONSTRUCTION/D&D - Construction Contractor	0.0	0.0	0.0	0.0	0.0	0.0	0.0	0.0	0.0	0.0
OPERATIONS - Site Management/Operations	0.0	0.0	0.0	0.0	0.0	0.0	0.0	0.0	0.0	0.0
OPERATIONS - Site Infrastructure	0.0	0.0	0.0	0.0	0.0	0.0	0.0	0.0	0.0	0.0
OPERATIONS - National Laboratories	0.0	0.0	0.0	0.0	0.0	0.0	0.0	0.0	0.0	0.0
OPERATIONS - Site Constructors	0.0	0.0	0.0	0.0	0.0	0.0	0.0	0.0	0.0	0.0
OPERATIONS - Architecture/Engineering Contractors	0.0	0.0	0.0	0.0	0.0	0.0	0.0	0.0	0.0	0.0
OPERATIONS - Construction Contractor	0.0	0.0	0.0	0.0	0.0	0.0	0.0	0.0	0.0	0.0
Worker Category Reddick FTE (FTE)										
Engineer/Management	0.0	0.0	0.0	0.0	0.0	0.0	0.0	0.0	0.0	0.0
Crafts	0.0	0.0	0.0	0.0	0.0	0.0	0.0	0.0	0.0	0.0
Maintenance	0.0	0.0	0.0	0.0	0.0	0.0	0.0	0.0	0.0	0.0
Operators	0.0	0.0	0.0	0.0	0.0	0.0	0.0	0.0	0.0	0.0
Infrastructure	0.0	0.0	0.0	0.0	0.0	0.0	0.0	0.0	0.0	0.0
Total	0.0	0.0	0.0	0.0	0.0	0.0	0.0	0.0	0.0	0.0

ALTERNATIVE 1 RETRIEVAL COST SUMMARY	FY31	FY32	FY33	FY34	FY35	FY36	FY37	FY38	FY39	FY40
Studies/Permitting	0	0	0	0	0	0	0	0	0	0
Design	0	0	0	0	0	0	0	0	0	0
Construction/D&D	0	0	0	0	0	0	0	0	0	0
Operation	0	0	0	0	0	0	0	0	0	0
Total	0	0	0	0	0	0	0	0	0	0

ALTERNATIVE 1 RETRIEVAL FTE SUMMARY	FY31	FY32	FY33	FY34	FY35	FY36	FY37	FY38	FY39	FY40
Engineer/Management	0.0	0.0	0.0	0.0	0.0	0.0	0.0	0.0	0.0	0.0
Crafts	0.0	0.0	0.0	0.0	0.0	0.0	0.0	0.0	0.0	0.0
Maintenance	0.0	0.0	0.0	0.0	0.0	0.0	0.0	0.0	0.0	0.0
Operators	0.0	0.0	0.0	0.0	0.0	0.0	0.0	0.0	0.0	0.0
Infrastructure	0.0	0.0	0.0	0.0	0.0	0.0	0.0	0.0	0.0	0.0
Total	0.0	0.0	0.0	0.0	0.0	0.0	0.0	0.0	0.0	0.0

ALTERNATIVE 1 RETRIEVAL REDDICK COST BREAKDOWN

Activity % of Alt 1 Retrieval Reddick Costs (%)	
Studies/Permitting	
Design	
Construction/D&D	
Operation	
Total Percentage	

Alt 1 Retrieval Activity Reddick Costs($)	Totals
Studies/Permitting	500,000
Design	4,000,000
Construction/D&D	14,500,000
Operation	20,200,000
Total Cost	39,200,000

ALTERNATIVE 1 RETRIEVAL REDDICK FTE BREAKDOWN	Totals
Contractor Reddick FTE per Alt 1 Retrieval Activity (FTE)	
STUDIES/PERMITTING - Site Management/Operations	2.9
STUDIES/PERMITTING - Site Infrastructure	0.5
STUDIES/PERMITTING - National Laboratories	0.1
STUDIES/PERMITTING - Site Constructors	0.0
STUDIES/PERMITTING - Architecture/Engineering Contract	0.0
STUDIES/PERMITTING - Construction Contractor	0.0
DESIGN - Site Management/Operations	2.4
DESIGN - Site Infrastructure	0.4
DESIGN - National Laboratories	2.1
DESIGN - Site Constructors	1.4
DESIGN - Architecture/Engineering Contractors	16.7
DESIGN - Construction Contractor	0.0
CONSTRUCTION/D&D - Site Management/Operations	8.8
CONSTRUCTION/D&D - Site Infrastructure	1.6
CONSTRUCTION/D&D - National Laboratories	0.0
CONSTRUCTION/D&D - Site Constructors	5.2
CONSTRUCTION/D&D - Architecture/Engineering Contracto	4.0
CONSTRUCTION/D&D - Construction Contractor	85.3
OPERATIONS - Site Management/Operations	85.9
OPERATIONS - Site Infrastructure	15.2
OPERATIONS - National Laboratories	10.8
OPERATIONS - Site Constructors	0.0
OPERATIONS - Architecture/Engineering Contractors	0.0
OPERATIONS - Construction Contractor	0.0
Worker Category Reddick FTE (FTE)	
Engineer/Management	79.1
Crafts	69.3
Maintenance	29.0
Operators	48.3
Infrastructure	17.6
Total	243.3

ALTERNATIVE 1 RETRIEVAL COST SUMMARY	Totals
Studies/Permitting	65,326,682
Design	31,450,875
Construction/D&D	41,951,577
Operation	63,181,446
Total	201,910,580

ALTERNATIVE 1 RETRIEVAL FTE SUMMARY	Totals
Engineer/Management	720.5
Crafts	200.4
Maintenance	89.4
Operators	148.9
Infrastructure	99.5
Total	1,258.7

FUNCTION - ALTERNATIVE 1 PRETREATMENT	FY95	FY96	FY97	FY98	FY99	FY00
Technology Development (Test) Cost	17,262,028	16,119,000	16,086,284	11,575,785	11,575,785	4,758,768
Operate LLW Pretreatment Mod 1 Facility First Year (Hot Test)	0	0	0	0	0	0
Operate LLW Pretreatment Mod 2 Facility First Year (Hot Test)	0	0	0	0	0	0
Prepare for Start Up In Tank Processing	0	0	1,063,794	12,714,867	1,114,451	0
Start-up In-Tank Processing	0	0	0	0	3,718,683	4,075,936
Start-up and Operate Pretreatment Pilot Testing	0	0	2,744,937	10,936,178	10,936,178	1,786,388
Continue Operation of Pilot Testing	0	0				11,015,598
Tank AZ-101 Sludge Test (PSW49XXX)	959,856	1,267,219	997,975	10,625,079	37,644	0
Prep LLW Pretreatment Mod 1 Facility For Start-up Phase 2 (Co	0	0	0	0	0	0
Prep LLW Pretreatment Mod 2 Facility For Start-up Phase 2 (Co	0	0	0	0	0	0
WESF Hot Cell Test (PDW211XX)	12,369,178	10,792,515	8,701,654	5,232,769	867,496	0
Operate HLW Pretreatment Facility - First Year (Hot Test)	0	0	0	0	0	0
Prepare HLW Pretreatment Facility for Start-up (Cold Test)	0	0	0	0	0	0
Subtotal Test Costs	30,591,062	28,178,734	29,594,644	51,084,678	28,250,237	21,636,690
Test Oversight Costs	3,059,106	2,817,873	2,959,464	5,108,468	2,825,024	2,163,669
Total Pretreatment Base Costs	33,650,168	30,996,607	32,554,108	56,193,146	31,075,261	23,800,359
Total Alt 1 Reddick Costs	*2,000,000*	*2,000,000*	*6,000,000*	*10,000,000*	*35,000,000*	*35,000,000*
Pretreatment % of Total Alt 1 Reddick Costs	*25*	*25*	*25*	*25*	*25*	*25*
Alt 1 Pretreatment Reddick Costs	500,000	500,000	1,500,000	2,500,000	8,750,000	8,750,000
Alt 1 Pretreatment Actual Costs ($)	34,150,168	31,496,607	34,054,108	58,693,146	39,825,261	32,550,359

ALTERNATIVE 1 PRETREATMENT BASE COST BREAKDOWN	FY95	FY96	FY97	FY98	FY99	FY00
Activity % of Alt 1 Pretreatment Base Costs (%)						
Studies/Permitting	20	20	20	10	15	15
Design	5	5	5	5	5	5
Construction/D&D	25	25	25	10	5	5
Operation	50	50	50	75	75	75
Total Percentage	100	100	100	100	100	100
Alt 1 Pretreatment Activity Base Costs($)						
Studies/Permitting	6,730,034	6,199,321	6,510,822	5,619,315	4,661,289	3,570,054
Design	1,682,508	1,549,830	1,627,705	2,809,657	1,553,763	1,190,018
Construction/D&D	8,412,542	7,749,152	8,138,527	5,619,315	1,553,763	1,190,018
Operation	16,825,084	15,498,304	16,277,054	42,144,859	23,306,446	17,850,269
Total Cost	33,650,168	30,996,607	32,554,108	56,193,146	31,075,261	23,800,359

ALTERNATIVE 1 PRETREATMENT BASE FTE BREAKDOWN	FY95	FY96	FY97	FY98	FY99	FY00
Contractor Base FTE per Alt 1 Pretreatment Activity (FTE)						
STUDIES/PERMITTING - Site Management/Operations	30.6	28.2	29.6	25.6	21.2	16.3
STUDIES/PERMITTING - Site Infrastructure	5.4	5.0	5.2	4.5	3.7	2.9
STUDIES/PERMITTING - National Laboratories	9.0	8.3	8.7	7.5	6.3	4.8
STUDIES/PERMITTING - Site Constructors	0.0	0.0	0.0	0.0	0.0	0.0
STUDIES/PERMITTING - Architecture/Engineering Contractors	0.0	0.0	0.0	0.0	0.0	0.0
STUDIES/PERMITTING - Construction Contractor	0.0	0.0	0.0	0.0	0.0	0.0
DESIGN - Site Management/Operations	1.0	0.9	1.0	1.7	0.9	0.7
DESIGN - Site Infrastructure	0.2	0.2	0.2	0.3	0.2	0.1
DESIGN - National Laboratories	0.9	0.8	0.9	1.5	0.8	0.6
DESIGN - Site Constructors	0.6	0.6	0.6	1.0	0.6	0.4
DESIGN - Architecture/Engineering Contractors	7.0	6.5	6.8	11.7	6.5	5.0
DESIGN - Construction Contractor	0.0	0.0	0.0	0.0	0.0	0.0
CONSTRUCTION/D&D - Site Management/Operations	2.6	2.4	2.5	1.7	0.5	0.4
CONSTRUCTION/D&D - Site Infrastructure	0.5	0.4	0.4	0.3	0.1	0.1
CONSTRUCTION/D&D - National Laboratories	2.3	2.1	2.2	1.5	0.4	0.3
CONSTRUCTION/D&D - Site Constructors	3.0	2.8	2.9	2.0	0.6	0.4
CONSTRUCTION/D&D - Architecture/Engineering Contractors	2.3	2.2	2.3	1.6	0.4	0.3
CONSTRUCTION/D&D - Construction Contractor	49.5	45.6	47.9	33.1	9.1	7.0
OPERATIONS - Site Management/Operations	56.2	51.8	54.4	140.7	77.8	59.6
OPERATIONS - Site Infrastructure	9.9	9.1	9.6	24.8	13.7	10.5
OPERATIONS - National Laboratories	22.6	20.8	21.8	56.5	31.3	23.9
OPERATIONS - Site Constructors	0.0	0.0	0.0	0.0	0.0	0.0
OPERATIONS - Architecture/Engineering Contractors	0.0	0.0	0.0	0.0	0.0	0.0
OPERATIONS - Construction Contractor	0.0	0.0	0.0	0.0	0.0	0.0

Worker Category Base FTE (FTE)	FY95	FY96	FY97	FY98	FY99	FY00
Engineer/Management	84.4	77.8	81.7	101.5	61.7	47.3
Crafts	40.2	37.0	38.9	26.8	7.4	5.7
Maintenance	23.6	21.8	22.9	59.2	32.7	25.1
Operators	39.4	36.3	38.1	98.6	54.5	41.8
Infrastructure	16.0	14.7	15.4	30.0	17.7	13.6
Total	203.6	187.5	196.9	316.1	174.1	133.4

FUNCTION - ALTERNATIVE 1 PRETREATMENT	FY01	FY02	FY03	FY04	FY05	FY06
Technology Development (Test) Cost	4,739,809	800,285	500,285	0	0	0
Operate LLW Pretreatment Mod 1 Facility First Year (Hot Test)	0	0	0	0	38,794,388	12,520,940
Operate LLW Pretreatment Mod 2 Facility First Year (Hot Test)	0	0	0	0		20,418,988
Prepare for Start Up In Tank Processing	0	0	0	0	0	0
Start-up In-Tank Processing	4,059,698	4,075,936	4,075,936	4,092,175	341,015	0
Start-up and Operate Pretreatment Pilot Testing	0	0	0	0	0	0
Continue Operation of Pilot Testing	13,113,807	2,255,575	0	0	0	0
Tank AZ-101 Sludge Test (PSW49XXX)	0	0	0	0	0	0
Prep LLW Pretreatment Mod 1 Facility For Start-up Phase 2 (Co	0	0	0	11,059,208	3,608,794	0
Prep LLW Pretreatment Mod 2 Facility For Start-up Phase 2 (Co	0	0	0		17,903,592	5,778,408
WESF Hot Cell Test (PDW211XX)	0	0	0	0	0	0
Operate HLW Pretreatment Facility - First Year (Hot Test)	0	0	0	0	0	0
Prepare HLW Pretreatment Facility for Start-up (Cold Test)	0	0	0	0	0	0
Subtotal Test Costs	21,913,314	7,131,796	4,576,221	15,151,381	60,647,789	38,718,334
Test Oversight Costs	2,191,331	713,180	457,622	1,515,138	6,064,779	3,871,833
Total Pretreatment Base Costs	24,104,645	7,844,976	5,033,843	16,666,519	66,712,568	42,590,167
Total Alt 1 Reddick Costs	*35,000,000*	*105,000,000*	*150,000,000*	*155,000,000*	*130,000,000*	*34,000,000*
Pretreatment % of Total Alt 1 Reddick Costs	*25*	*25*	*49*	*50*	*5*	*5*
Alt 1 Pretreatment Reddick Costs	8,750,000	26,250,000	73,500,000	77,500,000	6,500,000	1,700,000
Alt 1 Pretreatment Actual Costs ($)	32,854,645	34,094,976	78,533,843	94,166,519	73,212,568	44,290,167

ALTERNATIVE 1 PRETREATMENT BASE COST BREAKDOWN	FY01	FY02	FY03	FY04	FY05	FY06
Activity % of Alt 1 Pretreatment Base Costs (%)						
Studies/Permitting	15	10	10	10	5	5
Design	5	0	0	0	0	0
Construction/D&D	0	0	0	0	0	0
Operation	80	90	90	90	95	95
Total Percentage	100	100	100	100	100	100
Alt 1 Pretreatment Activity Base Costs($)						
Studies/Permitting	3,615,697	784,498	503,384	1,666,652	3,335,628	2,129,508
Design	1,205,232	0	0	0	0	0
Construction/D&D	0	0	0	0	0	0
Operation	19,283,716	7,060,478	4,530,459	14,999,867	63,376,940	40,460,659
Total Cost	24,104,645	7,844,976	5,033,843	16,666,519	66,712,568	42,590,167

ALTERNATIVE 1 PRETREATMENT BASE FTE BREAKDOWN	FY01	FY02	FY03	FY04	FY05	FY06
Contractor Base FTE per Alt 1 Pretreatment Activity (FTE)						
STUDIES/PERMITTING - Site Management/Operations	16.5	3.6	2.3	7.6	15.2	9.7
STUDIES/PERMITTING - Site Infrastructure	2.9	0.6	0.4	1.3	2.7	1.7
STUDIES/PERMITTING - National Laboratories	4.9	1.1	0.7	2.2	4.5	2.9
STUDIES/PERMITTING - Site Constructors	0.0	0.0	0.0	0.0	0.0	0.0
STUDIES/PERMITTING - Architecture/Engineering Contractors	0.0	0.0	0.0	0.0	0.0	0.0
STUDIES/PERMITTING - Construction Contractor	0.0	0.0	0.0	0.0	0.0	0.0
DESIGN - Site Management/Operations	0.7	0.0	0.0	0.0	0.0	0.0
DESIGN - Site Infrastructure	0.1	0.0	0.0	0.0	0.0	0.0
DESIGN - National Laboratories	0.6	0.0	0.0	0.0	0.0	0.0
DESIGN - Site Constructors	0.4	0.0	0.0	0.0	0.0	0.0
DESIGN - Architecture/Engineering Contractors	5.0	0.0	0.0	0.0	0.0	0.0
DESIGN - Construction Contractor	0.0	0.0	0.0	0.0	0.0	0.0
CONSTRUCTION/D&D - Site Management/Operations	0.0	0.0	0.0	0.0	0.0	0.0
CONSTRUCTION/D&D - Site Infrastructure	0.0	0.0	0.0	0.0	0.0	0.0
CONSTRUCTION/D&D - National Laboratories	0.0	0.0	0.0	0.0	0.0	0.0
CONSTRUCTION/D&D - Site Constructors	0.0	0.0	0.0	0.0	0.0	0.0
CONSTRUCTION/D&D - Architecture/Engineering Contractors	0.0	0.0	0.0	0.0	0.0	0.0
CONSTRUCTION/D&D - Construction Contractor	0.0	0.0	0.0	0.0	0.0	0.0
OPERATIONS - Site Management/Operations	64.4	23.6	15.1	50.1	211.6	135.1
OPERATIONS - Site Infrastructure	11.4	4.2	2.7	8.8	37.3	23.8
OPERATIONS - National Laboratories	25.9	9.5	6.1	20.1	85.0	54.3
OPERATIONS - Site Constructors	0.0	0.0	0.0	0.0	0.0	0.0
OPERATIONS - Architecture/Engineering Contractors	0.0	0.0	0.0	0.0	0.0	0.0
OPERATIONS - Construction Contractor	0.0	0.0	0.0	0.0	0.0	0.0

Worker Category Base FTE (FTE)	FY01	FY02	FY03	FY04	FY05	FY06
Engineer/Management	46.2	11.2	7.2	23.9	79.0	50.4
Crafts	0.0	0.0	0.0	0.0	0.0	0.0
Maintenance	27.1	9.9	6.4	21.1	89.0	56.8
Operators	45.1	16.5	10.6	35.1	148.3	94.7
Infrastructure	14.4	4.8	3.1	10.2	40.0	25.6
Total	132.8	42.5	27.2	90.2	356.3	227.5

FUNCTION - ALTERNATIVE 1 PRETREATMENT	FY07	FY08	FY09	FY10	FY11	FY12
Technology Development (Test) Cost	0	0	0	0	0	0
Operate LLW Pretreatment Mod 1 Facility First Year (Hot Test)	0	0	0	0	0	0
Operate LLW Pretreatment Mod 2 Facility First Year (Hot Test)	6,590,255	0	0	0	0	0
Prepare for Start Up In Tank Processing	0	0	0	0	0	0
Start-up In-Tank Processing	0	0	0	0	0	0
Start-up and Operate Pretreatment Pilot Testing	0	0	0	0	0	0
Continue Operation of Pilot Testing	0	0	0	0	0	0
Tank AZ-101 Sludge Test (PSW49XXX)	0	0	0	0	0	0
Prep LLW Pretreatment Mod 1 Facility For Start-up Phase 2 (Co	0	0	0	0	0	0
Prep LLW Pretreatment Mod 2 Facility For Start-up Phase 2 (Co	0	0	0	0	0	0
WESF Hot Cell Test (POW211XX)	0	0	0	0	0	0
Operate HLW Pretreatment Facility - First Year (Hot Test)	0	965,396	0	0	0	0
Prepare HLW Pretreatment Facility for Start-up (Cold Test)	1,061,420	2,122,840	0	0	0	0
Subtotal Test Costs	7,651,675	3,088,236	0	0	0	0
Test Oversight Costs	765,168	308,824	0	0	0	0
Total Pretreatment Base Costs	8,416,843	3,397,060	0	0	0	0
Total Alt 1 Reddick Costs	*34,000,000*	*34,000,000*	*24,000,000*	*24,000,000*		
Pretreatment % of Total Alt 1 Reddick Costs	*5*	*5*	*5*	*5*		
Alt 1 Pretreatment Reddick Costs	1,700,000	1,700,000	1,200,000	1,200,000	0	0
Alt 1 Pretreatment Actual Costs ($)	10,116,843	5,097,060	1,200,000	1,200,000	0	0

ALTERNATIVE 1 PRETREATMENT BASE COST BREAKDOWN	FY07	FY08	FY09	FY10	FY11	FY12
Activity % of Alt 1 Pretreatment Base Costs (%)						
Studies/Permitting	5	5	0	0	0	0
Design	0	0	0	0	0	0
Construction/D&D	0	0	0	0	0	0
Operation	95	95	0	0	0	0
Total Percentage	100	100	0	0	0	0
Alt 1 Pretreatment Activity Base Costs($)						
Studies/Permitting	420,842	169,853	0	0	0	0
Design	0	0	0	0	0	0
Construction/D&D	0	0	0	0	0	0
Operation	7,996,000	3,227,207	0	0	0	0
Total Cost	8,416,843	3,397,060	0	0	0	0

ALTERNATIVE 1 PRETREATMENT BASE FTE BREAKDOWN	FY07	FY08	FY09	FY10	FY11	FY12
Contractor Base FTE per Alt 1 Pretreatment Activity (FTE)						
STUDIES/PERMITTING - Site Management/Operations	1.9	0.8	0.0	0.0	0.0	0.0
STUDIES/PERMITTING - Site Infrastructure	0.3	0.1	0.0	0.0	0.0	0.0
STUDIES/PERMITTING - National Laboratories	0.6	0.2	0.0	0.0	0.0	0.0
STUDIES/PERMITTING - Site Constructors	0.0	0.0	0.0	0.0	0.0	0.0
STUDIES/PERMITTING - Architecture/Engineering Contractors	0.0	0.0	0.0	0.0	0.0	0.0
STUDIES/PERMITTING - Construction Contractor	0.0	0.0	0.0	0.0	0.0	0.0
DESIGN - Site Management/Operations	0.0	0.0	0.0	0.0	0.0	0.0
DESIGN - Site Infrastructure	0.0	0.0	0.0	0.0	0.0	0.0
DESIGN - National Laboratories	0.0	0.0	0.0	0.0	0.0	0.0
DESIGN - Site Constructors	0.0	0.0	0.0	0.0	0.0	0.0
DESIGN - Architecture/Engineering Contractors	0.0	0.0	0.0	0.0	0.0	0.0
DESIGN - Construction Contractor	0.0	0.0	0.0	0.0	0.0	0.0
CONSTRUCTION/D&D - Site Management/Operations	0.0	0.0	0.0	0.0	0.0	0.0
CONSTRUCTION/D&D - Site Infrastructure	0.0	0.0	0.0	0.0	0.0	0.0
CONSTRUCTION/D&D - National Laboratories	0.0	0.0	0.0	0.0	0.0	0.0
CONSTRUCTION/D&D - Site Constructors	0.0	0.0	0.0	0.0	0.0	0.0
CONSTRUCTION/D&D - Architecture/Engineering Contractors	0.0	0.0	0.0	0.0	0.0	0.0
CONSTRUCTION/D&D - Construction Contractor	0.0	0.0	0.0	0.0	0.0	0.0
OPERATIONS - Site Management/Operations	26.7	10.8	0.0	0.0	0.0	0.0
OPERATIONS - Site Infrastructure	4.7	1.9	0.0	0.0	0.0	0.0
OPERATIONS - National Laboratories	10.7	4.3	0.0	0.0	0.0	0.0
OPERATIONS - Site Constructors	0.0	0.0	0.0	0.0	0.0	0.0
OPERATIONS - Architecture/Engineering Contractors	0.0	0.0	0.0	0.0	0.0	0.0
OPERATIONS - Construction Contractor	0.0	0.0	0.0	0.0	0.0	0.0

Worker Category Base FTE (FTE)	FY07	FY08	FY09	FY10	FY11	FY12
Engineer/Management	10.0	4.0	0.0	0.0	0.0	0.0
Crafts	0.0	0.0	0.0	0.0	0.0	0.0
Maintenance	11.2	4.5	0.0	0.0	0.0	0.0
Operators	18.7	7.6	0.0	0.0	0.0	0.0
Infrastructure	5.1	2.0	0.0	0.0	0.0	0.0
Total	45.0	18.1	0.0	0.0	0.0	0.0

FUNCTION - ALTERNATIVE 1 PRETREATMENT	FY13	FY14	FY15	FY16	FY17	FY18	FY19	FY20	FY21	FY22
Technology Development (Test) Cost	0	0	0	0	0	0	0	0	0	0
Operate LLW Pretreatment Mod 1 Facility First Year (Hot Test)	0	0	0	0	0	0	0	0	0	0
Operate LLW Pretreatment Mod 2 Facility First Year (Hot Test)	0	0	0	0	0	0	0	0	0	0
Prepare for Start Up In Tank Processing	0	0	0	0	0	0	0	0	0	0
Start-up In-Tank Processing	0	0	0	0	0	0	0	0	0	0
Start-up and Operate Pretreatment Pilot Testing	0	0	0	0	0	0	0	0	0	0
Continue Operation of Pilot Testing	0	0	0	0	0	0	0	0	0	0
Tank AZ-101 Sludge Test (PSW49XXX)	0	0	0	0	0	0	0	0	0	0
Prep LLW Pretreatment Mod 1 Facility For Start-up Phase 2 (Co	0	0	0	0	0	0	0	0	0	0
Prep LLW Pretreatment Mod 2 Facility For Start-up Phase 2 (Co	0	0	0	0	0	0	0	0	0	0
WESF Hot Cell Test (PDW211XX)	0	0	0	0	0	0	0	0	0	0
Operate HLW Pretreatment Facility - First Year (Hot Test)	0	0	0	0	0	0	0	0	0	0
Prepare HLW Pretreatment Facility for Start-up (Cold Test)	0	0	0	0	0	0	0	0	0	0
Subtotal Test Costs	0	0	0	0	0	0	0	0	0	0
Test Oversight Costs	0	0	0	0	0	0	0	0	0	0
Total Pretreatment Base Costs	0	0	0	0	0	0	0	0	0	0
Total Alt 1 Reddick Costs										
Pretreatment % of Total Alt 1 Reddick Costs										
Alt 1 Pretreatment Reddick Costs	0	0	0	0	0	0	0	0	0	0
Alt 1 Pretreatment Actual Costs ($)	0	0	0	0	0	0	0	0	0	0

ALTERNATIVE 1 PRETREATMENT BASE COST BREAKDOWN	FY13	FY14	FY15	FY16	FY17	FY18	FY19	FY20	FY21	FY22
Activity % of Alt 1 Pretreatment Base Costs (%)										
Studies/Permitting	0	0	0	0	0	0	0	0	0	0
Design	0	0	0	0	0	0	0	0	0	0
Construction/D&D	0	0	0	0	0	0	0	0	0	0
Operation	0	0	0	0	0	0	0	0	0	0
Total Percentage	0	0	0	0	0	0	0	0	0	0
Alt 1 Pretreatment Activity Base Costs($)										
Studies/Permitting	0	0	0	0	0	0	0	0	0	0
Design	0	0	0	0	0	0	0	0	0	0
Construction/D&D	0	0	0	0	0	0	0	0	0	0
Operation	0	0	0	0	0	0	0	0	0	0
Total Cost	0	0	0	0	0	0	0	0	0	0

ALTERNATIVE 1 PRETREATMENT BASE FTE BREAKDOWN	FY13	FY14	FY15	FY16	FY17	FY18	FY19	FY20	FY21	FY22
Contractor Base FTE per Alt 1 Pretreatment Activity (FTE)										
STUDIES/PERMITTING - Site Management/Operations	0.0	0.0	0.0	0.0	0.0	0.0	0.0	0.0	0.0	0.0
STUDIES/PERMITTING - Site Infrastructure	0.0	0.0	0.0	0.0	0.0	0.0	0.0	0.0	0.0	0.0
STUDIES/PERMITTING - National Laboratories	0.0	0.0	0.0	0.0	0.0	0.0	0.0	0.0	0.0	0.0
STUDIES/PERMITTING - Site Constructors	0.0	0.0	0.0	0.0	0.0	0.0	0.0	0.0	0.0	0.0
STUDIES/PERMITTING - Architecture/Engineering Contractors	0.0	0.0	0.0	0.0	0.0	0.0	0.0	0.0	0.0	0.0
STUDIES/PERMITTING - Construction Contractor	0.0	0.0	0.0	0.0	0.0	0.0	0.0	0.0	0.0	0.0
DESIGN - Site Management/Operations	0.0	0.0	0.0	0.0	0.0	0.0	0.0	0.0	0.0	0.0
DESIGN - Site Infrastructure	0.0	0.0	0.0	0.0	0.0	0.0	0.0	0.0	0.0	0.0
DESIGN - National Laboratories	0.0	0.0	0.0	0.0	0.0	0.0	0.0	0.0	0.0	0.0
DESIGN - Site Constructors	0.0	0.0	0.0	0.0	0.0	0.0	0.0	0.0	0.0	0.0
DESIGN - Architecture/Engineering Contractors	0.0	0.0	0.0	0.0	0.0	0.0	0.0	0.0	0.0	0.0
DESIGN - Construction Contractor	0.0	0.0	0.0	0.0	0.0	0.0	0.0	0.0	0.0	0.0
CONSTRUCTION/D&D - Site Management/Operations	0.0	0.0	0.0	0.0	0.0	0.0	0.0	0.0	0.0	0.0
CONSTRUCTION/D&D - Site Infrastructure	0.0	0.0	0.0	0.0	0.0	0.0	0.0	0.0	0.0	0.0
CONSTRUCTION/D&D - National Laboratories	0.0	0.0	0.0	0.0	0.0	0.0	0.0	0.0	0.0	0.0
CONSTRUCTION/D&D - Site Constructors	0.0	0.0	0.0	0.0	0.0	0.0	0.0	0.0	0.0	0.0
CONSTRUCTION/D&D - Architecture/Engineering Contractors	0.0	0.0	0.0	0.0	0.0	0.0	0.0	0.0	0.0	0.0
CONSTRUCTION/D&D - Construction Contractor	0.0	0.0	0.0	0.0	0.0	0.0	0.0	0.0	0.0	0.0
OPERATIONS - Site Management/Operations	0.0	0.0	0.0	0.0	0.0	0.0	0.0	0.0	0.0	0.0
OPERATIONS - Site Infrastructure	0.0	0.0	0.0	0.0	0.0	0.0	0.0	0.0	0.0	0.0
OPERATIONS - National Laboratories	0.0	0.0	0.0	0.0	0.0	0.0	0.0	0.0	0.0	0.0
OPERATIONS - Site Constructors	0.0	0.0	0.0	0.0	0.0	0.0	0.0	0.0	0.0	0.0
OPERATIONS - Architecture/Engineering Contractors	0.0	0.0	0.0	0.0	0.0	0.0	0.0	0.0	0.0	0.0
OPERATIONS - Construction Contractor	0.0	0.0	0.0	0.0	0.0	0.0	0.0	0.0	0.0	0.0

Worker Category Base FTE (FTE)	FY13	FY14	FY15	FY16	FY17	FY18	FY19	FY20	FY21	FY22
Engineer/Management	0.0	0.0	0.0	0.0	0.0	0.0	0.0	0.0	0.0	0.0
Crafts	0.0	0.0	0.0	0.0	0.0	0.0	0.0	0.0	0.0	0.0
Maintenance	0.0	0.0	0.0	0.0	0.0	0.0	0.0	0.0	0.0	0.0
Operators	0.0	0.0	0.0	0.0	0.0	0.0	0.0	0.0	0.0	0.0
Infrastructure	0.0	0.0	0.0	0.0	0.0	0.0	0.0	0.0	0.0	0.0
Total	0.0	0.0	0.0	0.0	0.0	0.0	0.0	0.0	0.0	0.0

FUNCTION - ALTERNATIVE 1 PRETREATMENT	FY23	FY24	FY25	FY26	FY27	FY28	FY29	FY30	FY31	FY32	FY33	FY34	FY35
Technology Development (Test) Cost	0	0	0	0	0	0	0	0	0	0	0	0	0
Operate LLW Pretreatment Mod 1 Facility First Year (Hot Test)	0	0	0	0	0	0	0	0	0	0	0	0	0
Operate LLW Pretreatment Mod 2 Facility First Year (Hot Test)	0	0	0	0	0	0	0	0	0	0	0	0	0
Prepare for Start Up In Tank Processing	0	0	0	0	0	0	0	0	0	0	0	0	0
Start-up In-Tank Processing	0	0	0	0	0	0	0	0	0	0	0	0	0
Start-up and Operate Pretreatment Pilot Testing	0	0	0	0	0	0	0	0	0	0	0	0	0
Continue Operation of Pilot Testing	0	0	0	0	0	0	0	0	0	0	0	0	0
Tank AZ-101 Sludge Test (PSW49XXX)	0	0	0	0	0	0	0	0	0	0	0	0	0
Prep LLW Pretreatment Mod 1 Facility For Start-up Phase 2 (Co	0	0	0	0	0	0	0	0	0	0	0	0	0
Prep LLW Pretreatment Mod 2 Facility For Start-up Phase 2 (Co	0	0	0	0	0	0	0	0	0	0	0	0	0
WESF Hot Cell Test (PDW211XX)	0	0	0	0	0	0	0	0	0	0	0	0	0
Operate HLW Pretreatment Facility - First Year (Hot Test)	0	0	0	0	0	0	0	0	0	0	0	0	0
Prepare HLW Pretreatment Facility for Start-up (Cold Test)	0	0	0	0	0	0	0	0	0	0	0	0	0
Subtotal Test Costs	0	0	0	0	0	0	0	0	0	0	0	0	0
Test Oversight Costs	0	0	0	0	0	0	0	0	0	0	0	0	0
Total Pretreatment Base Costs	0	0	0	0	0	0	0	0	0	0	0	0	0
Total Alt 1 Reddick Costs													
Pretreatment % of Total Alt 1 Reddick Costs													
Alt 1 Pretreatment Reddick Costs	0	0	0	0	0	0	0	0	0	0	0	0	0
Alt 1 Pretreatment Actual Costs ($)	0	0	0	0	0	0	0	0	0	0	0	0	0

ALTERNATIVE 1 PRETREATMENT BASE COST BREAKDOWN	FY23	FY24	FY25	FY26	FY27	FY28	FY29	FY30	FY31	FY32	FY33	FY34	FY35
Activity % of Alt-1 Pretreatment Base Costs (%)													
Studies/Permitting	0	0	0	0	0	0	0	0	0	0	0	0	0
Design	0	0	0	0	0	0	0	0	0	0	0	0	0
Construction/D&D	0	0	0	0	0	0	0	0	0	0	0	0	0
Operation	0	0	0	0	0	0	0	0	0	0	0	0	0
Total Percentage	0	0	0	0	0	0	0	0	0	0	0	0	0
Alt 1 Pretreatment Activity Base Costs($)													
Studies/Permitting	0	0	0	0	0	0	0	0	0	0	0	0	0
Design	0	0	0	0	0	0	0	0	0	0	0	0	0
Construction/D&D	0	0	0	0	0	0	0	0	0	0	0	0	0
Operation	0	0	0	0	0	0	0	0	0	0	0	0	0
Total Cost	0	0	0	0	0	0	0	0	0	0	0	0	0

ALTERNATIVE 1 PRETREATMENT BASE FTE BREAKDOWN	FY23	FY24	FY25	FY26	FY27	FY28	FY29	FY30	FY31	FY32	FY33	FY34	FY35
Contractor Base FTE per Alt 1 Pretreatment Activity (FTE)													
STUDIES/PERMITTING - Site Management/Operations	0.0	0.0	0.0	0.0	0.0	0.0	0.0	0.0	0.0	0.0	0.0	0.0	0.0
STUDIES/PERMITTING - Site Infrastructure	0.0	0.0	0.0	0.0	0.0	0.0	0.0	0.0	0.0	0.0	0.0	0.0	0.0
STUDIES/PERMITTING - National Laboratories	0.0	0.0	0.0	0.0	0.0	0.0	0.0	0.0	0.0	0.0	0.0	0.0	0.0
STUDIES/PERMITTING - Site Constructors	0.0	0.0	0.0	0.0	0.0	0.0	0.0	0.0	0.0	0.0	0.0	0.0	0.0
STUDIES/PERMITTING - Architecture/Engineering Contractors	0.0	0.0	0.0	0.0	0.0	0.0	0.0	0.0	0.0	0.0	0.0	0.0	0.0
STUDIES/PERMITTING - Construction Contractor	0.0	0.0	0.0	0.0	0.0	0.0	0.0	0.0	0.0	0.0	0.0	0.0	0.0
DESIGN - Site Management/Operations	0.0	0.0	0.0	0.0	0.0	0.0	0.0	0.0	0.0	0.0	0.0	0.0	0.0
DESIGN - Site Infrastructure	0.0	0.0	0.0	0.0	0.0	0.0	0.0	0.0	0.0	0.0	0.0	0.0	0.0
DESIGN - National Laboratories	0.0	0.0	0.0	0.0	0.0	0.0	0.0	0.0	0.0	0.0	0.0	0.0	0.0
DESIGN - Site Constructors	0.0	0.0	0.0	0.0	0.0	0.0	0.0	0.0	0.0	0.0	0.0	0.0	0.0
DESIGN - Architecture/Engineering Contractors	0.0	0.0	0.0	0.0	0.0	0.0	0.0	0.0	0.0	0.0	0.0	0.0	0.0
DESIGN - Construction Contractor	0.0	0.0	0.0	0.0	0.0	0.0	0.0	0.0	0.0	0.0	0.0	0.0	0.0
CONSTRUCTION/D&D - Site Management/Operations	0.0	0.0	0.0	0.0	0.0	0.0	0.0	0.0	0.0	0.0	0.0	0.0	0.0
CONSTRUCTION/D&D - Site Infrastructure	0.0	0.0	0.0	0.0	0.0	0.0	0.0	0.0	0.0	0.0	0.0	0.0	0.0
CONSTRUCTION/D&D - National Laboratories	0.0	0.0	0.0	0.0	0.0	0.0	0.0	0.0	0.0	0.0	0.0	0.0	0.0
CONSTRUCTION/D&D - Site Constructors	0.0	0.0	0.0	0.0	0.0	0.0	0.0	0.0	0.0	0.0	0.0	0.0	0.0
CONSTRUCTION/D&D - Architecture/Engineering Contractors	0.0	0.0	0.0	0.0	0.0	0.0	0.0	0.0	0.0	0.0	0.0	0.0	0.0
CONSTRUCTION/D&D - Construction Contractor	0.0	0.0	0.0	0.0	0.0	0.0	0.0	0.0	0.0	0.0	0.0	0.0	0.0
OPERATIONS - Site Management/Operations	0.0	0.0	0.0	0.0	0.0	0.0	0.0	0.0	0.0	0.0	0.0	0.0	0.0
OPERATIONS - Site Infrastructure	0.0	0.0	0.0	0.0	0.0	0.0	0.0	0.0	0.0	0.0	0.0	0.0	0.0
OPERATIONS - National Laboratories	0.0	0.0	0.0	0.0	0.0	0.0	0.0	0.0	0.0	0.0	0.0	0.0	0.0
OPERATIONS - Site Constructors	0.0	0.0	0.0	0.0	0.0	0.0	0.0	0.0	0.0	0.0	0.0	0.0	0.0
OPERATIONS - Architecture/Engineering Contractors	0.0	0.0	0.0	0.0	0.0	0.0	0.0	0.0	0.0	0.0	0.0	0.0	0.0
OPERATIONS - Construction Contractor	0.0	0.0	0.0	0.0	0.0	0.0	0.0	0.0	0.0	0.0	0.0	0.0	0.0

Worker Category Base FTE (FTE)	FY23	FY24	FY25	FY26	FY27	FY28	FY29	FY30	FY31	FY32	FY33	FY34	FY35
Engineer/Management	0.0	0.0	0.0	0.0	0.0	0.0	0.0	0.0	0.0	0.0	0.0	0.0	0.0
Crafts	0.0	0.0	0.0	0.0	0.0	0.0	0.0	0.0	0.0	0.0	0.0	0.0	0.0
Maintenance	0.0	0.0	0.0	0.0	0.0	0.0	0.0	0.0	0.0	0.0	0.0	0.0	0.0
Operators	0.0	0.0	0.0	0.0	0.0	0.0	0.0	0.0	0.0	0.0	0.0	0.0	0.0
Infrastructure	0.0	0.0	0.0	0.0	0.0	0.0	0.0	0.0	0.0	0.0	0.0	0.0	0.0
Total	0.0	0.0	0.0	0.0	0.0	0.0	0.0	0.0	0.0	0.0	0.0	0.0	0.0

FUNCTION - ALTERNATIVE 1 PRETREATMENT	FY36	FY37	FY38	FY39	FY40	Totals
Technology Development (Test) Cost	0	0	0	0	0	83,418,029
Operate LLW Pretreatment Mod 1 Facility First Year (Hot Test)	0	0	0	0	0	51,315,328
Operate LLW Pretreatment Mod 2 Facility First Year (Hot Test)	0	0	0	0	0	27,009,241
Prepare for Start Up In Tank Processing	0	0	0	0	0	14,893,112
Start-up In-Tank Processing	0	0	0	0	0	24,439,379
Start-up and Operate Pretreatment Pilot Testing	0	0	0	0	0	26,403,681
Continue Operation of Pilot Testing	0	0	0	0	0	26,384,980
Tank AZ-101 Sludge Test (PSW49XXX)	0	0	0	0	0	
Prep LLW Pretreatment Mod 1 Facility For Start-up Phase 2 (Co	0	0	0	0	0	
Prep LLW Pretreatment Mod 2 Facility For Start-up Phase 2 (Co	0	0	0	0	0	
WESF Hot Cell Test (PDW211XX)	0	0	0	0	0	
Operate HLW Pretreatment Facility - First Year (Hot Test)	0	0	0	0	0	
Prepare HLW Pretreatment Facility for Start-up (Cold Test)	0	0	0	0	0	
Subtotal Test Costs	0	0	0	0	0	348,214,791
Test Oversight Costs	0	0	0	0	0	34,821,479
Total Pretreatment Base Costs	0	0	0	0	0	383,036,270
Total Alt 1 Reddick Costs						815,000,000
Pretreatment % of Total Alt 1 Reddick Costs						329
Alt 1 Pretreatment Reddick Costs	0	0	0	0	0	222,500,000
Alt 1 Pretreatment Actual Costs ($)	0	0	0	0	0	605,536,270

ALTERNATIVE 1 PRETREATMENT BASE COST BREAKDOWN	FY36	FY37	FY38	FY39	FY40	
Activity % of Alt 1 Pretreatment Base Costs (%)						
Studies/Permitting	0	0	0	0	0	
Design	0	0	0	0	0	
Construction/D&D	0	0	0	0	0	
Operation	0	0	0	0	0	
Total Percentage	0	0	0	0	0	
Alt 1 Pretreatment Activity Base Costs($)						Totals
Studies/Permitting	0	0	0	0	0	45,916,897
Design	0	0	0	0	0	11,618,715
Construction/D&D	0	0	0	0	0	32,663,317
Operation	0	0	0	0	0	292,837,342
Total Cost	0	0	0	0	0	383,036,270

ALTERNATIVE 1 PRETREATMENT BASE FTE BREAKDOWN	FY36	FY37	FY38	FY39	FY40	Totals
Contractor Base FTE per Alt 1 Pretreatment Activity (FTE)						
STUDIES/PERMITTING - Site Management/Operations	0.0	0.0	0.0	0.0	0.0	209.1
STUDIES/PERMITTING - Site Infrastructure	0.0	0.0	0.0	0.0	0.0	36.9
STUDIES/PERMITTING - National Laboratories	0.0	0.0	0.0	0.0	0.0	61.6
STUDIES/PERMITTING - Site Constructors	0.0	0.0	0.0	0.0	0.0	0.0
STUDIES/PERMITTING - Architecture/Engineering Contractors	0.0	0.0	0.0	0.0	0.0	0.0
STUDIES/PERMITTING - Construction Contractor	0.0	0.0	0.0	0.0	0.0	0.0
DESIGN - Site Management/Operations	0.0	0.0	0.0	0.0	0.0	7.1
DESIGN - Site Infrastructure	0.0	0.0	0.0	0.0	0.0	1.2
DESIGN - National Laboratories	0.0	0.0	0.0	0.0	0.0	6.2
DESIGN - Site Constructors	0.0	0.0	0.0	0.0	0.0	4.1
DESIGN - Architecture/Engineering Contractors	0.0	0.0	0.0	0.0	0.0	48.4
DESIGN - Construction Contractor	0.0	0.0	0.0	0.0	0.0	0.0
CONSTRUCTION/D&D - Site Management/Operations	0.0	0.0	0.0	0.0	0.0	9.9
CONSTRUCTION/D&D - Site Infrastructure	0.0	0.0	0.0	0.0	0.0	1.7
CONSTRUCTION/D&D - National Laboratories	0.0	0.0	0.0	0.0	0.0	8.8
CONSTRUCTION/D&D - Site Constructors	0.0	0.0	0.0	0.0	0.0	11.7
CONSTRUCTION/D&D - Architecture/Engineering Contractors	0.0	0.0	0.0	0.0	0.0	9.1
CONSTRUCTION/D&D - Construction Contractor	0.0	0.0	0.0	0.0	0.0	192.1
OPERATIONS - Site Management/Operations	0.0	0.0	0.0	0.0	0.0	977.9
OPERATIONS - Site Infrastructure	0.0	0.0	0.0	0.0	0.0	172.6
OPERATIONS - National Laboratories	0.0	0.0	0.0	0.0	0.0	392.9
OPERATIONS - Site Constructors	0.0	0.0	0.0	0.0	0.0	0.0
OPERATIONS - Architecture/Engineering Contractors	0.0	0.0	0.0	0.0	0.0	0.0
OPERATIONS - Construction Contractor	0.0	0.0	0.0	0.0	0.0	0.0

Worker Category Base FTE (FTE)	FY36	FY37	FY38	FY39	FY40	Totals
Engineer/Management	0.0	0.0	0.0	0.0	0.0	686.2
Crafts	0.0	0.0	0.0	0.0	0.0	156.0
Maintenance	0.0	0.0	0.0	0.0	0.0	411.2
Operators	0.0	0.0	0.0	0.0	0.0	685.4
Infrastructure	0.0	0.0	0.0	0.0	0.0	212.5
Total	0.0	0.0	0.0	0.0	0.0	2,151.3

ALTERNATIVE 1 PRETREATMENT REDDICK COST BREAKDOWN	FY95	FY96	FY97	FY98	FY99	FY00
Activity % of Alt 1 Pretreatment Reddick Costs (%)						
Studies/Permitting	100	100	100	10	10	10
Design	0	0	0	90	90	90
Construction/D&D	0	0	0	0	0	0
Operation	0	0	0	0	0	0
Total Percentage	100	100	100	100	100	100
Alt 1 Pretreatment Activity Reddick Costs($)						
Studies/Permitting	500,000	500,000	1,500,000	250,000	875,000	875,000
Design	0	0	0	2,250,000	7,875,000	7,875,000
Construction/D&D	0	0	0	0	0	0
Operation	0	0	0	0	0	0
Total Cost	500,000	500,000	1,500,000	2,500,000	8,750,000	8,750,000

ALTERNATIVE 1 PRETREATMENT REDDICK FTE BREAKDOWN	FY95	FY96	FY97	FY98	FY99	FY00
Contractor Reddick FTE per Alt 1 Pretreatment Activity (FTE)						
STUDIES/PERMITTING - Site Management/Operations	2.9	2.9	8.7	1.4	5.0	5.0
STUDIES/PERMITTING - Site Infrastructure	0.5	0.5	1.5	0.3	0.9	0.9
STUDIES/PERMITTING - National Laboratories	0.1	0.1	0.4	0.1	0.2	0.2
STUDIES/PERMITTING - Site Constructors	0.0	0.0	0.0	0.0	0.0	0.0
STUDIES/PERMITTING - Architecture/Engineering Contract	0.0	0.0	0.0	0.0	0.0	0.0
STUDIES/PERMITTING - Construction Contractor	0.0	0.0	0.0	0.0	0.0	0.0
DESIGN - Site Management/Operations	0.0	0.0	0.0	1.4	4.8	4.8
DESIGN - Site Infrastructure	0.0	0.0	0.0	0.2	0.8	0.8
DESIGN - National Laboratories	0.0	0.0	0.0	1.2	4.2	4.2
DESIGN - Site Constructors	0.0	0.0	0.0	0.8	2.8	2.8
DESIGN - Architecture/Engineering Contractors	0.0	0.0	0.0	9.4	32.8	32.8
DESIGN - Construction Contractor	0.0	0.0	0.0	0.0	0.0	0.0
CONSTRUCTION/D&D - Site Management/Operations	0.0	0.0	0.0	0.0	0.0	0.0
CONSTRUCTION/D&D - Site Infrastructure	0.0	0.0	0.0	0.0	0.0	0.0
CONSTRUCTION/D&D - National Laboratories	0.0	0.0	0.0	0.0	0.0	0.0
CONSTRUCTION/D&D - Site Constructors	0.0	0.0	0.0	0.0	0.0	0.0
CONSTRUCTION/D&D - Architecture/Engineering Contracto	0.0	0.0	0.0	0.0	0.0	0.0
CONSTRUCTION/D&D - Construction Contractor	0.0	0.0	0.0	0.0	0.0	0.0
OPERATIONS - Site Management/Operations	0.0	0.0	0.0	0.0	0.0	0.0
OPERATIONS - Site Infrastructure	0.0	0.0	0.0	0.0	0.0	0.0
OPERATIONS - National Laboratories	0.0	0.0	0.0	0.0	0.0	0.0
OPERATIONS - Site Constructors	0.0	0.0	0.0	0.0	0.0	0.0
OPERATIONS - Architecture/Engineering Contractors	0.0	0.0	0.0	0.0	0.0	0.0
OPERATIONS - Construction Contractor	0.0	0.0	0.0	0.0	0.0	0.0
Worker Category Reddick FTE (FTE)						
Engineer/Management	3.0	3.0	9.1	14.3	49.9	49.9
Crafts	0.0	0.0	0.0	0.0	0.0	0.0
Maintenance	0.0	0.0	0.0	0.0	0.0	0.0
Operators	0.0	0.0	0.0	0.0	0.0	0.0
Infrastructure	0.5	0.5	1.5	0.5	1.7	1.7
Total	3.5	3.5	10.6	14.8	51.6	51.6

ALTERNATIVE 1 PRETREATMENT COST SUMMARY	FY95	FY96	FY97	FY98	FY99	FY00
Studies/Permitting	7,230,034	6,699,321	8,010,822	5,869,315	5,536,289	4,445,054
Design	1,682,508	1,549,830	1,627,705	5,059,657	9,428,763	9,065,018
Construction/D&D	8,412,542	7,749,152	8,138,527	5,619,315	1,553,763	1,190,018
Operation	16,825,084	15,498,304	16,277,054	42,144,859	23,306,446	17,850,269
Total	34,150,168	31,496,607	34,054,108	58,693,146	39,825,261	32,550,359

ALTERNATIVE 1 PRETREATMENT FTE SUMMARY	FY95	FY96	FY97	FY98	FY99	FY00
Engineer/Management	87.4	80.8	90.7	115.8	111.6	97.2
Crafts	40.2	37.0	38.9	26.8	7.4	5.7
Maintenance	23.6	21.8	22.9	59.2	32.7	25.1
Operators	39.4	36.3	38.1	98.6	54.5	41.8
Infrastructure	16.5	15.2	17.0	30.4	19.5	15.3
Total	207.1	191.0	207.5	330.9	225.8	185.0

ALTERNATIVE 1 PRETREATMENT REDDICK COST BREAKDOWN	FY01	FY02	FY03	FY04	FY05
Activity % of Alt 1 Pretreatment Reddick Costs (%)					
Studies/Permitting	10	0	0	0	0
Design	40	0	0	0	0
Construction/D&D	50	100	30	0	0
Operation	0	0	70	100	100
Total Percentage	100	100	100	100	100
Alt 1 Pretreatment Activity Reddick Costs($)					
Studies/Permitting	875,000	0	0	0	0
Design	3,500,000	0	0	0	0
Construction/D&D	4,375,000	26,250,000	22,050,000	0	0
Operation	0	0	51,450,000	77,500,000	6,500,000
Total Cost	8,750,000	26,250,000	73,500,000	77,500,000	6,500,000

ALTERNATIVE 1 PRETREATMENT REDDICK FTE BREAKDOWN	FY01	FY02	FY03	FY04	FY05
Contractor Reddick FTE per Alt 1 Pretreatment Activity (FTE)					
STUDIES/PERMITTING - Site Management/Operations	5.0	0.0	0.0	0.0	0.0
STUDIES/PERMITTING - Site Infrastructure	0.9	0.0	0.0	0.0	0.0
STUDIES/PERMITTING - National Laboratories	0.2	0.0	0.0	0.0	0.0
STUDIES/PERMITTING - Site Constructors	0.0	0.0	0.0	0.0	0.0
STUDIES/PERMITTING - Architecture/Engineering Contract	0.0	0.0	0.0	0.0	0.0
STUDIES/PERMITTING - Construction Contractor	0.0	0.0	0.0	0.0	0.0
DESIGN - Site Management/Operations	2.1	0.0	0.0	0.0	0.0
DESIGN - Site Infrastructure	0.4	0.0	0.0	0.0	0.0
DESIGN - National Laboratories	1.9	0.0	0.0	0.0	0.0
DESIGN - Site Constructors	1.3	0.0	0.0	0.0	0.0
DESIGN - Architecture/Engineering Contractors	14.6	0.0	0.0	0.0	0.0
DESIGN - Construction Contractor	0.0	0.0	0.0	0.0	0.0
CONSTRUCTION/D&D - Site Management/Operations	2.7	15.9	13.4	0.0	0.0
CONSTRUCTION/D&D - Site Infrastructure	0.5	2.8	2.4	0.0	0.0
CONSTRUCTION/D&D - National Laboratories	0.0	0.0	0.0	0.0	0.0
CONSTRUCTION/D&D - Site Constructors	1.6	9.4	7.9	0.0	0.0
CONSTRUCTION/D&D - Architecture/Engineering Contracto	1.2	7.3	6.1	0.0	0.0
CONSTRUCTION/D&D - Construction Contractor	25.7	154.4	129.7	0.0	0.0
OPERATIONS - Site Management/Operations	0.0	0.0	218.7	329.4	27.6
OPERATIONS - Site Infrastructure	0.0	0.0	38.6	58.1	4.9
OPERATIONS - National Laboratories	0.0	0.0	27.6	41.6	3.5
OPERATIONS - Site Constructors	0.0	0.0	0.0	0.0	0.0
OPERATIONS - Architecture/Engineering Contractors	0.0	0.0	0.0	0.0	0.0
OPERATIONS - Construction Contractor	0.0	0.0	0.0	0.0	0.0
Worker Category Reddick FTE (FTE)					
Engineer/Management	35.4	61.6	101.0	74.2	6.2
Crafts	20.9	125.4	105.3	0.0	0.0
Maintenance	0.0	0.0	73.9	111.3	9.3
Operators	0.0	0.0	123.1	185.5	15.6
Infrastructure	1.7	2.8	41.0	58.1	4.9
Total	58.0	189.8	444.3	429.1	36.0

ALTERNATIVE 1 PRETREATMENT COST SUMMARY	FY01	FY02	FY03	FY04	FY05
Studies/Permitting	4,490,697	784,498	503,384	1,666,652	3,335,628
Design	4,705,232	0	0	0	0
Construction/D&D	4,375,000	26,250,000	22,050,000	0	0
Operation	19,283,716	7,060,478	55,980,459	92,499,867	69,876,940
Total	32,854,645	34,094,976	78,533,843	94,166,519	73,212,568

ALTERNATIVE 1 PRETREATMENT FTE SUMMARY	FY01	FY02	FY03	FY04	FY05
Engineer/Management	81.6	72.8	108.2	98.1	85.2
Crafts	20.9	125.4	105.3	0.0	0.0
Maintenance	27.1	9.9	80.2	132.4	98.3
Operators	45.1	16.5	133.7	220.6	163.9
Infrastructure	16.1	7.6	44.0	68.3	44.9
Total	190.8	232.3	471.6	519.3	392.3

ALTERNATIVE 1 PRETREATMENT REDDICK COST BREAKDOWN	FY06	FY07	FY08	FY09	FY10	FY11
Activity % of Alt 1 Pretreatment Reddick Costs (%)						
Studies/Permitting	0	0	0	0	0	0
Design	0	0	0	0	0	0
Construction/D&D	0	0	0	0	0	0
Operation	100	100	100	100	100	0
Total Percentage	100	100	100	100	100	0
Alt 1 Pretreatment Activity Reddick Costs($)						
Studies/Permitting	0	0	0	0	0	0
Design	0	0	0	0	0	0
Construction/D&D	0	0	0	0	0	0
Operation	1,700,000	1,700,000	1,700,000	1,200,000	1,200,000	0
Total Cost	1,700,000	1,700,000	1,700,000	1,200,000	1,200,000	0

ALTERNATIVE 1 PRETREATMENT REDDICK FTE BREAKDOWN	FY06	FY07	FY08	FY09	FY10	FY11
Contractor Reddick FTE per Alt 1 Pretreatment Activity (FTE)						
STUDIES/PERMITTING - Site Management/Operations	0.0	0.0	0.0	0.0	0.0	0.0
STUDIES/PERMITTING - Site Infrastructure	0.0	0.0	0.0	0.0	0.0	0.0
STUDIES/PERMITTING - National Laboratories	0.0	0.0	0.0	0.0	0.0	0.0
STUDIES/PERMITTING - Site Constructors	0.0	0.0	0.0	0.0	0.0	0.0
STUDIES/PERMITTING - Architecture/Engineering Contract	0.0	0.0	0.0	0.0	0.0	0.0
STUDIES/PERMITTING - Construction Contractor	0.0	0.0	0.0	0.0	0.0	0.0
DESIGN - Site Management/Operations	0.0	0.0	0.0	0.0	0.0	0.0
DESIGN - Site Infrastructure	0.0	0.0	0.0	0.0	0.0	0.0
DESIGN - National Laboratories	0.0	0.0	0.0	0.0	0.0	0.0
DESIGN - Site Constructors	0.0	0.0	0.0	0.0	0.0	0.0
DESIGN - Architecture/Engineering Contractors	0.0	0.0	0.0	0.0	0.0	0.0
DESIGN - Construction Contractor	0.0	0.0	0.0	0.0	0.0	0.0
CONSTRUCTION/D&D - Site Management/Operations	0.0	0.0	0.0	0.0	0.0	0.0
CONSTRUCTION/D&D - Site Infrastructure	0.0	0.0	0.0	0.0	0.0	0.0
CONSTRUCTION/D&D - National Laboratories	0.0	0.0	0.0	0.0	0.0	0.0
CONSTRUCTION/D&D - Site Constructors	0.0	0.0	0.0	0.0	0.0	0.0
CONSTRUCTION/D&D - Architecture/Engineering Contracto	0.0	0.0	0.0	0.0	0.0	0.0
CONSTRUCTION/D&D - Construction Contractor	0.0	0.0	0.0	0.0	0.0	0.0
OPERATIONS - Site Management/Operations	7.2	7.2	7.2	5.1	5.1	0.0
OPERATIONS - Site Infrastructure	1.3	1.3	1.3	0.9	0.9	0.0
OPERATIONS - National Laboratories	0.9	0.9	0.9	0.6	0.6	0.0
OPERATIONS - Site Constructors	0.0	0.0	0.0	0.0	0.0	0.0
OPERATIONS - Architecture/Engineering Contractors	0.0	0.0	0.0	0.0	0.0	0.0
OPERATIONS - Construction Contractor	0.0	0.0	0.0	0.0	0.0	0.0
Worker Category Reddick FTE (FTE)						
Engineer/Management	1.6	1.6	1.6	1.1	1.1	0.0
Crafts	0.0	0.0	0.0	0.0	0.0	0.0
Maintenance	2.4	2.4	2.4	1.7	1.7	0.0
Operators	4.1	4.1	4.1	2.9	2.9	0.0
Infrastructure	1.3	1.3	1.3	0.9	0.9	0.0
Total	9.4	9.4	9.4	6.6	6.6	0.0

ALTERNATIVE 1 PRETREATMENT COST SUMMARY	FY06	FY07	FY08	FY09	FY10	FY11
Studies/Permitting	2,129,508	420,842	169,853	0	0	0
Design	0	0	0	0	0	0
Construction/D&D	0	0	0	0	0	0
Operation	42,160,659	9,696,000	4,927,207	1,200,000	1,200,000	0
Total	44,290,167	10,116,843	5,097,060	1,200,000	1,200,000	0

ALTERNATIVE 1 PRETREATMENT FTE SUMMARY	FY06	FY07	FY08	FY09	FY10	FY11
Engineer/Management	52.1	11.6	5.6	1.1	1.1	0.0
Crafts	0.0	0.0	0.0	0.0	0.0	0.0
Maintenance	59.3	13.7	7.0	1.7	1.7	0.0
Operators	98.8	22.8	11.6	2.9	2.9	0.0
Infrastructure	26.8	6.3	3.3	0.9	0.9	0.0
Total	236.9	54.4	27.6	6.6	6.6	0.0

ALTERNATIVE 1 PRETREATMENT REDDICK COST BREAKDOWN	FY12	FY13	FY14	FY15	FY16	FY17	FY18	FY19
Activity % of Alt 1 Pretreatment Reddick Costs (%)								
Studies/Permitting	0	0	0	0	0	0	0	0
Design	0	0	0	0	0	0	0	0
Construction/D&D	0	0	0	0	0	0	0	0
Operation	0	0	0	0	0	0	0	0
Total Percentage	0	0	0	0	0	0	0	0
Alt 1 Pretreatment Activity Reddick Costs($)								
Studies/Permitting	0	0	0	0	0	0	0	0
Design	0	0	0	0	0	0	0	0
Construction/D&D	0	0	0	0	0	0	0	0
Operation	0	0	0	0	0	0	0	0
Total Cost	0	0	0	0	0	0	0	0

ALTERNATIVE 1 PRETREATMENT REDDICK FTE BREAKDOWN	FY12	FY13	FY14	FY15	FY16	FY17	FY18	FY19
Contractor Reddick FTE per Alt 1 Pretreatment Activity (FTE)								
STUDIES/PERMITTING - Site Management/Operations	0.0	0.0	0.0	0.0	0.0	0.0	0.0	0.0
STUDIES/PERMITTING - Site Infrastructure	0.0	0.0	0.0	0.0	0.0	0.0	0.0	0.0
STUDIES/PERMITTING - National Laboratories	0.0	0.0	0.0	0.0	0.0	0.0	0.0	0.0
STUDIES/PERMITTING - Site Constructors	0.0	0.0	0.0	0.0	0.0	0.0	0.0	0.0
STUDIES/PERMITTING - Architecture/Engineering Contract	0.0	0.0	0.0	0.0	0.0	0.0	0.0	0.0
STUDIES/PERMITTING - Construction Contractor	0.0	0.0	0.0	0.0	0.0	0.0	0.0	0.0
DESIGN - Site Management/Operations	0.0	0.0	0.0	0.0	0.0	0.0	0.0	0.0
DESIGN - Site Infrastructure	0.0	0.0	0.0	0.0	0.0	0.0	0.0	0.0
DESIGN - National Laboratories	0.0	0.0	0.0	0.0	0.0	0.0	0.0	0.0
DESIGN - Site Constructors	0.0	0.0	0.0	0.0	0.0	0.0	0.0	0.0
DESIGN - Architecture/Engineering Contractors	0.0	0.0	0.0	0.0	0.0	0.0	0.0	0.0
DESIGN - Construction Contractor	0.0	0.0	0.0	0.0	0.0	0.0	0.0	0.0
CONSTRUCTION/D&D - Site Management/Operations	0.0	0.0	0.0	0.0	0.0	0.0	0.0	0.0
CONSTRUCTION/D&D - Site Infrastructure	0.0	0.0	0.0	0.0	0.0	0.0	0.0	0.0
CONSTRUCTION/D&D - National Laboratories	0.0	0.0	0.0	0.0	0.0	0.0	0.0	0.0
CONSTRUCTION/D&D - Site Constructors	0.0	0.0	0.0	0.0	0.0	0.0	0.0	0.0
CONSTRUCTION/D&D - Architecture/Engineering Contracto	0.0	0.0	0.0	0.0	0.0	0.0	0.0	0.0
CONSTRUCTION/D&D - Construction Contractor	0.0	0.0	0.0	0.0	0.0	0.0	0.0	0.0
OPERATIONS - Site Management/Operations	0.0	0.0	0.0	0.0	0.0	0.0	0.0	0.0
OPERATIONS - Site Infrastructure	0.0	0.0	0.0	0.0	0.0	0.0	0.0	0.0
OPERATIONS - National Laboratories	0.0	0.0	0.0	0.0	0.0	0.0	0.0	0.0
OPERATIONS - Site Constructors	0.0	0.0	0.0	0.0	0.0	0.0	0.0	0.0
OPERATIONS - Architecture/Engineering Contractors	0.0	0.0	0.0	0.0	0.0	0.0	0.0	0.0
OPERATIONS - Construction Contractor	0.0	0.0	0.0	0.0	0.0	0.0	0.0	0.0
Worker Category Reddick FTE (FTE)								
Engineer/Management	0.0	0.0	0.0	0.0	0.0	0.0	0.0	0.0
Crafts	0.0	0.0	0.0	0.0	0.0	0.0	0.0	0.0
Maintenance	0.0	0.0	0.0	0.0	0.0	0.0	0.0	0.0
Operators	0.0	0.0	0.0	0.0	0.0	0.0	0.0	0.0
Infrastructure	0.0	0.0	0.0	0.0	0.0	0.0	0.0	0.0
Total	0.0	0.0	0.0	0.0	0.0	0.0	0.0	0.0

ALTERNATIVE 1 PRETREATMENT COST SUMMARY	FY12	FY13	FY14	FY15	FY16	FY17	FY18	FY19
Studies/Permitting	0	0	0	0	0	0	0	0
Design	0	0	0	0	0	0	0	0
Construction/D&D	0	0	0	0	0	0	0	0
Operation	0	0	0	0	0	0	0	0
Total	0	0	0	0	0	0	0	0

ALTERNATIVE 1 PRETREATMENT FTE SUMMARY	FY12	FY13	FY14	FY15	FY16	FY17	FY18	FY19
Engineer/Management	0.0	0.0	0.0	0.0	0.0	0.0	0.0	0.0
Crafts	0.0	0.0	0.0	0.0	0.0	0.0	0.0	0.0
Maintenance	0.0	0.0	0.0	0.0	0.0	0.0	0.0	0.0
Operators	0.0	0.0	0.0	0.0	0.0	0.0	0.0	0.0
Infrastructure	0.0	0.0	0.0	0.0	0.0	0.0	0.0	0.0
Total	0.0	0.0	0.0	0.0	0.0	0.0	0.0	0.0

ALTERNATIVE 1 PRETREATMENT REDDICK COST BREAKDOWN	FY20	FY21	FY22	FY23	FY24	FY25	FY26	FY27	FY28	FY29	FY30
Activity % of Alt 1 Pretreatment Reddick Costs (%)											
Studies/Permitting	0	0	0	0	0	0	0	0	0	0	0
Design	0	0	0	0	0	0	0	0	0	0	0
Construction/D&D	0	0	0	0	0	0	0	0	0	0	0
Operation	0	0	0	0	0	0	0	0	0	0	0
Total Percentage	0	0	0	0	0	0	0	0	0	0	0
Alt 1 Pretreatment Activity Reddick Costs($)											
Studies/Permitting	0	0	0	0	0	0	0	0	0	0	0
Design	0	0	0	0	0	0	0	0	0	0	0
Construction/D&D	0	0	0	0	0	0	0	0	0	0	0
Operation	0	0	0	0	0	0	0	0	0	0	0
Total Cost	0	0	0	0	0	0	0	0	0	0	0

ALTERNATIVE 1 PRETREATMENT REDDICK FTE BREAKDOWN	FY20	FY21	FY22	FY23	FY24	FY25	FY26	FY27	FY28	FY29	FY30
Contractor Reddick FTE per Alt 1 Pretreatment Activity (FTE)											
STUDIES/PERMITTING - Site Management/Operations	0.0	0.0	0.0	0.0	0.0	0.0	0.0	0.0	0.0	0.0	0.0
STUDIES/PERMITTING - Site Infrastructure	0.0	0.0	0.0	0.0	0.0	0.0	0.0	0.0	0.0	0.0	0.0
STUDIES/PERMITTING - National Laboratories	0.0	0.0	0.0	0.0	0.0	0.0	0.0	0.0	0.0	0.0	0.0
STUDIES/PERMITTING - Site Constructors	0.0	0.0	0.0	0.0	0.0	0.0	0.0	0.0	0.0	0.0	0.0
STUDIES/PERMITTING - Architecture/Engineering Contract	0.0	0.0	0.0	0.0	0.0	0.0	0.0	0.0	0.0	0.0	0.0
STUDIES/PERMITTING - Construction Contractor	0.0	0.0	0.0	0.0	0.0	0.0	0.0	0.0	0.0	0.0	0.0
DESIGN - Site Management/Operations	0.0	0.0	0.0	0.0	0.0	0.0	0.0	0.0	0.0	0.0	0.0
DESIGN - Site Infrastructure	0.0	0.0	0.0	0.0	0.0	0.0	0.0	0.0	0.0	0.0	0.0
DESIGN - National Laboratories	0.0	0.0	0.0	0.0	0.0	0.0	0.0	0.0	0.0	0.0	0.0
DESIGN - Site Constructors	0.0	0.0	0.0	0.0	0.0	0.0	0.0	0.0	0.0	0.0	0.0
DESIGN - Architecture/Engineering Contractors	0.0	0.0	0.0	0.0	0.0	0.0	0.0	0.0	0.0	0.0	0.0
DESIGN - Construction Contractor	0.0	0.0	0.0	0.0	0.0	0.0	0.0	0.0	0.0	0.0	0.0
CONSTRUCTION/D&D - Site Management/Operations	0.0	0.0	0.0	0.0	0.0	0.0	0.0	0.0	0.0	0.0	0.0
CONSTRUCTION/D&D - Site Infrastructure	0.0	0.0	0.0	0.0	0.0	0.0	0.0	0.0	0.0	0.0	0.0
CONSTRUCTION/D&D - National Laboratories	0.0	0.0	0.0	0.0	0.0	0.0	0.0	0.0	0.0	0.0	0.0
CONSTRUCTION/D&D - Site Constructors	0.0	0.0	0.0	0.0	0.0	0.0	0.0	0.0	0.0	0.0	0.0
CONSTRUCTION/D&D - Architecture/Engineering Contracto	0.0	0.0	0.0	0.0	0.0	0.0	0.0	0.0	0.0	0.0	0.0
CONSTRUCTION/D&D - Construction Contractor	0.0	0.0	0.0	0.0	0.0	0.0	0.0	0.0	0.0	0.0	0.0
OPERATIONS - Site Management/Operations	0.0	0.0	0.0	0.0	0.0	0.0	0.0	0.0	0.0	0.0	0.0
OPERATIONS - Site Infrastructure	0.0	0.0	0.0	0.0	0.0	0.0	0.0	0.0	0.0	0.0	0.0
OPERATIONS - National Laboratories	0.0	0.0	0.0	0.0	0.0	0.0	0.0	0.0	0.0	0.0	0.0
OPERATIONS - Site Constructors	0.0	0.0	0.0	0.0	0.0	0.0	0.0	0.0	0.0	0.0	0.0
OPERATIONS - Architecture/Engineering Contractors	0.0	0.0	0.0	0.0	0.0	0.0	0.0	0.0	0.0	0.0	0.0
OPERATIONS - Construction Contractor	0.0	0.0	0.0	0.0	0.0	0.0	0.0	0.0	0.0	0.0	0.0
Worker Category Reddick FTE (FTE)											
Engineer/Management	0.0	0.0	0.0	0.0	0.0	0.0	0.0	0.0	0.0	0.0	0.0
Crafts	0.0	0.0	0.0	0.0	0.0	0.0	0.0	0.0	0.0	0.0	0.0
Maintenance	0.0	0.0	0.0	0.0	0.0	0.0	0.0	0.0	0.0	0.0	0.0
Operators	0.0	0.0	0.0	0.0	0.0	0.0	0.0	0.0	0.0	0.0	0.0
Infrastructure	0.0	0.0	0.0	0.0	0.0	0.0	0.0	0.0	0.0	0.0	0.0
Total	0.0	0.0	0.0	0.0	0.0	0.0	0.0	0.0	0.0	0.0	0.0

ALTERNATIVE 1 PRETREATMENT COST SUMMARY	FY20	FY21	FY22	FY23	FY24	FY25	FY26	FY27	FY28	FY29	FY30
Studies/Permitting	0	0	0	0	0	0	0	0	0	0	0
Design	0	0	0	0	0	0	0	0	0	0	0
Construction/D&D	0	0	0	0	0	0	0	0	0	0	0
Operation	0	0	0	0	0	0	0	0	0	0	0
Total	0	0	0	0	0	0	0	0	0	0	0

ALTERNATIVE 1 PRETREATMENT FTE SUMMARY	FY20	FY21	FY22	FY23	FY24	FY25	FY26	FY27	FY28	FY29	FY30
Engineer/Management	0.0	0.0	0.0	0.0	0.0	0.0	0.0	0.0	0.0	0.0	0.0
Crafts	0.0	0.0	0.0	0.0	0.0	0.0	0.0	0.0	0.0	0.0	0.0
Maintenance	0.0	0.0	0.0	0.0	0.0	0.0	0.0	0.0	0.0	0.0	0.0
Operators	0.0	0.0	0.0	0.0	0.0	0.0	0.0	0.0	0.0	0.0	0.0
Infrastructure	0.0	0.0	0.0	0.0	0.0	0.0	0.0	0.0	0.0	0.0	0.0
Total	0.0	0.0	0.0	0.0	0.0	0.0	0.0	0.0	0.0	0.0	0.0

ALTERNATIVE 1 PRETREATMENT REDDICK COST BREAKDOWN	FY31	FY32	FY33	FY34	FY35	FY36	FY37	FY38	FY39	FY40
Activity % of Alt 1 Pretreatment Reddick Costs (%)										
Studies/Permitting	0	0	0	0	0	0	0	0	0	0
Design	0	0	0	0	0	0	0	0	0	0
Construction/D&D	0	0	0	0	0	0	0	0	0	0
Operation	0	0	0	0	0	0	0	0	0	0
Total Percentage	0	0	0	0	0	0	0	0	0	0
Alt 1 Pretreatment Activity Reddick Costs($)										
Studies/Permitting	0	0	0	0	0	0	0	0	0	0
Design	0	0	0	0	0	0	0	0	0	0
Construction/D&D	0	0	0	0	0	0	0	0	0	0
Operation	0	0	0	0	0	0	0	0	0	0
Total Cost	0	0	0	0	0	0	0	0	0	0

ALTERNATIVE 1 PRETREATMENT REDDICK FTE BREAKDOWN	FY31	FY32	FY33	FY34	FY35	FY36	FY37	FY38	FY39	FY40
Contractor Reddick FTE per Alt 1 Pretreatment Activity (FTE)										
STUDIES/PERMITTING - Site Management/Operations	0.0	0.0	0.0	0.0	0.0	0.0	0.0	0.0	0.0	0.0
STUDIES/PERMITTING - Site Infrastructure	0.0	0.0	0.0	0.0	0.0	0.0	0.0	0.0	0.0	0.0
STUDIES/PERMITTING - National Laboratories	0.0	0.0	0.0	0.0	0.0	0.0	0.0	0.0	0.0	0.0
STUDIES/PERMITTING - Site Constructors	0.0	0.0	0.0	0.0	0.0	0.0	0.0	0.0	0.0	0.0
STUDIES/PERMITTING - Architecture/Engineering Contract	0.0	0.0	0.0	0.0	0.0	0.0	0.0	0.0	0.0	0.0
STUDIES/PERMITTING - Construction Contractor	0.0	0.0	0.0	0.0	0.0	0.0	0.0	0.0	0.0	0.0
DESIGN - Site Management/Operations	0.0	0.0	0.0	0.0	0.0	0.0	0.0	0.0	0.0	0.0
DESIGN - Site Infrastructure	0.0	0.0	0.0	0.0	0.0	0.0	0.0	0.0	0.0	0.0
DESIGN - National Laboratories	0.0	0.0	0.0	0.0	0.0	0.0	0.0	0.0	0.0	0.0
DESIGN - Site Constructors	0.0	0.0	0.0	0.0	0.0	0.0	0.0	0.0	0.0	0.0
DESIGN - Architecture/Engineering Contractors	0.0	0.0	0.0	0.0	0.0	0.0	0.0	0.0	0.0	0.0
DESIGN - Construction Contractor	0.0	0.0	0.0	0.0	0.0	0.0	0.0	0.0	0.0	0.0
CONSTRUCTION/D&D - Site Management/Operations	0.0	0.0	0.0	0.0	0.0	0.0	0.0	0.0	0.0	0.0
CONSTRUCTION/D&D - Site Infrastructure	0.0	0.0	0.0	0.0	0.0	0.0	0.0	0.0	0.0	0.0
CONSTRUCTION/D&D - National Laboratories	0.0	0.0	0.0	0.0	0.0	0.0	0.0	0.0	0.0	0.0
CONSTRUCTION/D&D - Site Constructors	0.0	0.0	0.0	0.0	0.0	0.0	0.0	0.0	0.0	0.0
CONSTRUCTION/D&D - Architecture/Engineering Contracto	0.0	0.0	0.0	0.0	0.0	0.0	0.0	0.0	0.0	0.0
CONSTRUCTION/D&D - Construction Contractor	0.0	0.0	0.0	0.0	0.0	0.0	0.0	0.0	0.0	0.0
OPERATIONS - Site Management/Operations	0.0	0.0	0.0	0.0	0.0	0.0	0.0	0.0	0.0	0.0
OPERATIONS - Site Infrastructure	0.0	0.0	0.0	0.0	0.0	0.0	0.0	0.0	0.0	0.0
OPERATIONS - National Laboratories	0.0	0.0	0.0	0.0	0.0	0.0	0.0	0.0	0.0	0.0
OPERATIONS - Site Constructors	0.0	0.0	0.0	0.0	0.0	0.0	0.0	0.0	0.0	0.0
OPERATIONS - Architecture/Engineering Contractors	0.0	0.0	0.0	0.0	0.0	0.0	0.0	0.0	0.0	0.0
OPERATIONS - Construction Contractor	0.0	0.0	0.0	0.0	0.0	0.0	0.0	0.0	0.0	0.0
Worker Category Reddick FTE (FTE)										
Engineer/Management	0.0	0.0	0.0	0.0	0.0	0.0	0.0	0.0	0.0	0.0
Crafts	0.0	0.0	0.0	0.0	0.0	0.0	0.0	0.0	0.0	0.0
Maintenance	0.0	0.0	0.0	0.0	0.0	0.0	0.0	0.0	0.0	0.0
Operators	0.0	0.0	0.0	0.0	0.0	0.0	0.0	0.0	0.0	0.0
Infrastructure	0.0	0.0	0.0	0.0	0.0	0.0	0.0	0.0	0.0	0.0
Total	0.0	0.0	0.0	0.0	0.0	0.0	0.0	0.0	0.0	0.0

ALTERNATIVE 1 PRETREATMENT COST SUMMARY	FY31	FY32	FY33	FY34	FY35	FY36	FY37	FY38	FY39	FY40
Studies/Permitting	0	0	0	0	0	0	0	0	0	0
Design	0	0	0	0	0	0	0	0	0	0
Construction/D&D	0	0	0	0	0	0	0	0	0	0
Operation	0	0	0	0	0	0	0	0	0	0
Total	0	0	0	0	0	0	0	0	0	0

ALTERNATIVE 1 PRETREATMENT FTE SUMMARY	FY31	FY32	FY33	FY34	FY35	FY36	FY37	FY38	FY39	FY40
Engineer/Management	0.0	0.0	0.0	0.0	0.0	0.0	0.0	0.0	0.0	0.0
Crafts	0.0	0.0	0.0	0.0	0.0	0.0	0.0	0.0	0.0	0.0
Maintenance	0.0	0.0	0.0	0.0	0.0	0.0	0.0	0.0	0.0	0.0
Operators	0.0	0.0	0.0	0.0	0.0	0.0	0.0	0.0	0.0	0.0
Infrastructure	0.0	0.0	0.0	0.0	0.0	0.0	0.0	0.0	0.0	0.0
Total	0.0	0.0	0.0	0.0	0.0	0.0	0.0	0.0	0.0	0.0

ALTERNATIVE 1 PRETREATMENT REDDICK COST BREAKDOWN

Activity % of Alt 1 Pretreatment Reddick Costs (%)	
Studies/Permitting	
Design	
Construction/D&D	
Operation	
Total Percentage	

Alt 1 Pretreatment Activity Reddick Costs($)	Totals
Studies/Permitting	5,375,000
Design	21,500,000
Construction/D&D	52,675,000
Operation	142,950,000
Total Cost	222,500,000

ALTERNATIVE 1 PRETREATMENT REDDICK FTE BREAKDOWN	Totals
Contractor Reddick FTE per Alt 1 Pretreatment Activity (FTE)	
STUDIES/PERMITTING - Site Management/Operations	31.0
STUDIES/PERMITTING - Site Infrastructure	5.5
STUDIES/PERMITTING - National Laboratories	1.4
STUDIES/PERMITTING - Site Constructors	0.0
STUDIES/PERMITTING - Architecture/Engineering Contract	0.0
STUDIES/PERMITTING - Construction Contractor	0.0
DESIGN - Site Management/Operations	13.1
DESIGN - Site Infrastructure	2.3
DESIGN - National Laboratories	11.5
DESIGN - Site Constructors	7.7
DESIGN - Architecture/Engineering Contractors	89.6
DESIGN - Construction Contractor	0.0
CONSTRUCTION/D&D - Site Management/Operations	32.0
CONSTRUCTION/D&D - Site Infrastructure	5.6
CONSTRUCTION/D&D - National Laboratories	0.0
CONSTRUCTION/D&D - Site Constructors	18.8
CONSTRUCTION/D&D - Architecture/Engineering Contracto	14.6
CONSTRUCTION/D&D - Construction Contractor	309.9
OPERATIONS - Site Management/Operations	607.5
OPERATIONS - Site Infrastructure	107.2
OPERATIONS - National Laboratories	76.7
OPERATIONS - Site Constructors	0.0
OPERATIONS - Architecture/Engineering Contractors	0.0
OPERATIONS - Construction Contractor	0.0
Worker Category Reddick FTE (FTE)	
Engineer/Management	414.8
Crafts	251.6
Maintenance	205.3
Operators	342.1
Infrastructure	120.6
Total	1,334.5

ALTERNATIVE 1 PRETREATMENT COST SUMMARY	Totals
Studies/Permitting	51,291,897
Design	33,118,715
Construction/D&D	85,338,317
Operation	435,787,342
Total	605,536,270

ALTERNATIVE 1 PRETREATMENT FTE SUMMARY	Totals
Engineer/Management	1,101.0
Crafts	407.7
Maintenance	616.5
Operators	1,027.5
Infrastructure	333.1
Total	3,485.7

FUNCTION - ALTERNATIVE 1 LLWV	FY95	FY96	FY97	FY98	FY99	FY00
Technology Development (Test) Cost	27,787,000	15,886,000	14,506,000	15,514,000	14,756,000	13,757,000
Perform LLW Cold Operations	0	0	0	0	0	0
Perform LLW Hot Operations First Year (Hot Test)	0	0	0	0	0	0
Subtotal Test Costs	27,787,000	15,886,000	14,506,000	15,514,000	14,756,000	13,757,000
Test Oversight Costs	2,778,700	1,588,600	1,450,600	1,551,400	1,475,600	1,375,700
Total LLWV Base Costs	**30,565,700**	**17,474,600**	**15,956,600**	**17,065,400**	**16,231,600**	**15,132,700**
Total Alt 1 Reddick Costs	*2,000,000*	*2,000,000*	*6,000,000*	*10,000,000*	*35,000,000*	*35,000,000*
LLWV % of Total Alt 1 Reddick Costs	*35*	*35*	*35*	*35*	*35*	*35*
Alt 1 LLWV Reddick Costs	**700,000**	**700,000**	**2,100,000**	**3,500,000**	**12,250,000**	**12,250,000**
Alt 1 LLWV Test Costs ($)	**31,265,700**	**18,174,600**	**18,056,600**	**20,565,400**	**28,481,600**	**27,382,700**

ALTERNATIVE 1 LLWV BASE COST BREAKDOWN	FY95	FY96	FY97	FY98	FY99	FY00
Activity % of Alt 1 LLWV Base Costs (%)						
Studies/Permitting	50	50	40	40	30	25
Design	0	0	0	0	0	0
Construction/D&D	10	10	10	10	10	5
Operation	40	40	50	50	60	70
Total Percentage	**100**	**100**	**100**	**100**	**100**	**100**
Alt 1 LLWV Base Costs($)						
Studies/Permitting	15,282,850	8,737,300	6,382,640	6,826,160	4,869,480	3,783,175
Design	0	0	0	0	0	0
Construction/D&D	3,056,570	1,747,460	1,595,660	1,706,540	1,623,160	756,635
Operation	12,226,280	6,989,840	7,978,300	8,532,700	9,738,960	10,592,890
Total Cost	**30,565,700**	**17,474,600**	**15,956,600**	**17,065,400**	**16,231,600**	**15,132,700**

ALTERNATIVE 1 LLWV BASE FTE BREAKDOWN	FY95	FY96	FY97	FY98	FY99	FY00
Contractor FTE per Alt 1 LLWV Activity (FTE)						
STUDIES/PERMITTING - Site Management/Operations	69.6	39.8	29.1	31.1	22.2	17.2
STUDIES/PERMITTING - Site Infrastructure	12.3	7.0	5.1	5.5	3.9	3.0
STUDIES/PERMITTING - National Laboratories	20.5	11.7	8.6	9.2	6.5	5.1
STUDIES/PERMITTING - Site Constructors	0.0	0.0	0.0	0.0	0.0	0.0
STUDIES/PERMITTING - Architecture/Engineering Contract	0.0	0.0	0.0	0.0	0.0	0.0
STUDIES/PERMITTING - Construction Contractor	0.0	0.0	0.0	0.0	0.0	0.0
DESIGN - Site Management/Operations	0.0	0.0	0.0	0.0	0.0	0.0
DESIGN - Site Infrastructure	0.0	0.0	0.0	0.0	0.0	0.0
DESIGN - National Laboratories	0.0	0.0	0.0	0.0	0.0	0.0
DESIGN - Site Constructors	0.0	0.0	0.0	0.0	0.0	0.0
DESIGN - Architecture/Engineering Contractors	0.0	0.0	0.0	0.0	0.0	0.0
DESIGN - Construction Contractor	0.0	0.0	0.0	0.0	0.0	0.0
CONSTRUCTION/D&D - Site Management/Operations	0.9	0.5	0.5	0.5	0.5	0.2
CONSTRUCTION/D&D - Site Infrastructure	0.2	0.1	0.1	0.1	0.1	0.0
CONSTRUCTION/D&D - National Laboratories	0.8	0.5	0.4	0.5	0.4	0.2
CONSTRUCTION/D&D - Site Constructors	1.1	0.6	0.6	0.6	0.6	0.3
CONSTRUCTION/D&D - Architecture/Engineering Contracto	0.8	0.5	0.4	0.5	0.5	0.2
CONSTRUCTION/D&D - Construction Contractor	18.0	10.3	9.4	10.0	9.5	4.5
OPERATIONS - Site Management/Operations	40.8	23.3	26.6	28.5	32.5	35.4
OPERATIONS - Site Infrastructure	7.2	4.1	4.7	5.0	5.7	6.2
OPERATIONS - National Laboratories	16.4	9.4	10.7	11.4	13.1	14.2
OPERATIONS - Site Constructors	0.0	0.0	0.0	0.0	0.0	0.0
OPERATIONS - Architecture/Engineering Contractors	0.0	0.0	0.0	0.0	0.0	0.0
OPERATIONS - Construction Contractor	0.0	0.0	0.0	0.0	0.0	0.0

Worker Category Base FTE (FTE)	FY95	FY96	FY97	FY98	FY99	FY00
Engineer/Management	108.6	62.1	48.8	52.2	41.6	34.0
Crafts	14.6	8.3	7.6	8.2	7.8	3.6
Maintenance	17.2	9.8	11.2	12.0	13.7	14.9
Operators	28.6	16.4	18.7	20.0	22.8	24.8
Infrastructure	19.6	11.2	9.9	10.6	9.7	9.3
Total	**188.6**	**107.8**	**96.2**	**102.9**	**95.5**	**86.6**

FUNCTION - ALTERNATIVE 1 LLWV	FY01	FY02	FY03	FY04	FY05
Technology Development (Test) Cost	12,939,000	12,026,000	11,461,000	10,127,000	9,810,000
Perform LLW Cold Operations	0	0	27,083,000	39,328,000	32,662,000
Perform LLW Hot Operations First Year (Hot Test)	0	0	0	0	44,803,000
Subtotal Test Costs	12,939,000	12,026,000	38,544,000	49,455,000	87,275,000
Test Oversight Costs	1,293,900	1,202,600	3,854,400	4,945,500	8,727,500
Total LLWV Base Costs	**14,232,900**	**13,228,600**	**42,398,400**	**54,400,500**	**96,002,500**
Total Alt 1 Reddick Costs	*35,000,000*	*105,000,000*	*150,000,000*	*155,000,000*	*130,000,000*
LLWV % of Total Alt 1 Reddick Costs	*35*	*35*	*23*	*23*	*45*
Alt 1 LLWV Reddick Costs	**12,250,000**	**36,750,000**	**34,500,000**	**35,650,000**	**58,500,000**
Alt 1 LLWV Test Costs ($)	**26,482,900**	**49,978,600**	**76,898,400**	**90,050,500**	**154,502,500**

ALTERNATIVE 1 LLWV BASE COST BREAKDOWN	FY01	FY02	FY03	FY04	FY05
Activity % of Alt 1 LLWV Base Costs (%)					
Studies/Permitting	0	0	0	0	0
Design	0	0	0	0	0
Construction/D&D	0	0	0	0	0
Operation	100	100	100	100	100
Total Percentage	**100**	**100**	**100**	**100**	**100**
Alt 1 LLWV Base Costs($)					
Studies/Permitting	0	0	0	0	0
Design	0	0	0	0	0
Construction/D&D	0	0	0	0	0
Operation	14,232,900	13,228,600	42,398,400	54,400,500	96,002,500
Total Cost	**14,232,900**	**13,228,600**	**42,398,400**	**54,400,500**	**96,002,500**

ALTERNATIVE 1 LLWV BASE FTE BREAKDOWN	FY01	FY02	FY03	FY04	FY05
Contractor FTE per Alt 1 LLWV Activity (FTE)					
STUDIES/PERMITTING - Site Management/Operations	0.0	0.0	0.0	0.0	0.0
STUDIES/PERMITTING - Site Infrastructure	0.0	0.0	0.0	0.0	0.0
STUDIES/PERMITTING - National Laboratories	0.0	0.0	0.0	0.0	0.0
STUDIES/PERMITTING - Site Constructors	0.0	0.0	0.0	0.0	0.0
STUDIES/PERMITTING - Architecture/Engineering Contract	0.0	0.0	0.0	0.0	0.0
STUDIES/PERMITTING - Construction Contractor	0.0	0.0	0.0	0.0	0.0
DESIGN - Site Management/Operations	0.0	0.0	0.0	0.0	0.0
DESIGN - Site Infrastructure	0.0	0.0	0.0	0.0	0.0
DESIGN - National Laboratories	0.0	0.0	0.0	0.0	0.0
DESIGN - Site Constructors	0.0	0.0	0.0	0.0	0.0
DESIGN - Architecture/Engineering Contractors	0.0	0.0	0.0	0.0	0.0
DESIGN - Construction Contractor	0.0	0.0	0.0	0.0	0.0
CONSTRUCTION/D&D - Site Management/Operations	0.0	0.0	0.0	0.0	0.0
CONSTRUCTION/D&D - Site Infrastructure	0.0	0.0	0.0	0.0	0.0
CONSTRUCTION/D&D - National Laboratories	0.0	0.0	0.0	0.0	0.0
CONSTRUCTION/D&D - Site Constructors	0.0	0.0	0.0	0.0	0.0
CONSTRUCTION/D&D - Architecture/Engineering Contracto	0.0	0.0	0.0	0.0	0.0
CONSTRUCTION/D&D - Construction Contractor	0.0	0.0	0.0	0.0	0.0
OPERATIONS - Site Management/Operations	47.5	44.2	141.6	181.7	320.6
OPERATIONS - Site Infrastructure	8.4	7.8	25.0	32.1	56.6
OPERATIONS - National Laboratories	19.1	17.7	56.9	73.0	128.8
OPERATIONS - Site Constructors	0.0	0.0	0.0	0.0	0.0
OPERATIONS - Architecture/Engineering Contractors	0.0	0.0	0.0	0.0	0.0
OPERATIONS - Construction Contractor	0.0	0.0	0.0	0.0	0.0

Worker Category Base FTE (FTE)	FY01	FY02	FY03	FY04	FY05
Engineer/Management	13.3	12.4	39.7	50.9	89.9
Crafts	0.0	0.0	0.0	0.0	0.0
Maintenance	20.0	18.6	59.5	76.4	134.8
Operators	33.3	31.0	99.2	127.3	224.7
Infrastructure	8.4	7.8	25.0	32.1	56.6
Total	**75.0**	**69.7**	**223.4**	**286.7**	**505.9**

FUNCTION - ALTERNATIVE 1 LLWV	FY06	FY07	FY08	FY09	FY10	FY11
Technology Development (Test) Cost	9,810,000	9,810,000	9,760,000	9,711,000	9,660,000	9,596,000
Perform LLW Cold Operations	0	0	0	0	0	0
Perform LLW Hot Operations First Year (Hot Test)	0	0	0	0	0	0
Subtotal Test Costs	9,810,000	9,810,000	9,760,000	9,711,000	9,660,000	9,596,000
Test Oversight Costs	981,000	981,000	976,000	971,100	966,000	959,600
Total LLWV Base Costs	**10,791,000**	**10,791,000**	**10,736,000**	**10,682,100**	**10,626,000**	**10,555,600**
Total Alt 1 Reddick Costs	*34,000,000*	*34,000,000*	*34,000,000*	*24,000,000*	*24,000,000*	
LLWV % of Total Alt 1 Reddick Costs	*45*	*45*	*45*	*45*	*45*	
Alt 1 LLWV Reddick Costs	**15,300,000**	**15,300,000**	**15,300,000**	**10,800,000**	**10,800,000**	**0**
Alt 1 LLWV Test Costs ($)	**26,091,000**	**26,091,000**	**26,036,000**	**21,482,100**	**21,426,000**	**10,555,600**

ALTERNATIVE 1 LLWV BASE COST BREAKDOWN	FY06	FY07	FY08	FY09	FY10	FY11
Activity % of Alt 1 LLWV Base Costs (%)						
Studies/Permitting	0	0	0	0	0	0
Design	0	0	0	0	0	0
Construction/D&D	0	0	0	0	0	0
Operation	100	100	100	100	100	100
Total Percentage	**100**	**100**	**100**	**100**	**100**	**100**
Alt 1 LLWV Base Costs($)						
Studies/Permitting	0	0	0	0	0	0
Design	0	0	0	0	0	0
Construction/D&D	0	0	0	0	0	0
Operation	10,791,000	10,791,000	10,736,000	10,682,100	10,626,000	10,555,600
Total Cost	**10,791,000**	**10,791,000**	**10,736,000**	**10,682,100**	**10,626,000**	**10,555,600**

ALTERNATIVE 1 LLWV BASE FTE BREAKDOWN	FY06	FY07	FY08	FY09	FY10	FY11
Contractor FTE per Alt 1 LLWV Activity (FTE)						
STUDIES/PERMITTING - Site Management/Operations	0.0	0.0	0.0	0.0	0.0	0.0
STUDIES/PERMITTING - Site Infrastructure	0.0	0.0	0.0	0.0	0.0	0.0
STUDIES/PERMITTING - National Laboratories	0.0	0.0	0.0	0.0	0.0	0.0
STUDIES/PERMITTING - Site Constructors	0.0	0.0	0.0	0.0	0.0	0.0
STUDIES/PERMITTING - Architecture/Engineering Contract	0.0	0.0	0.0	0.0	0.0	0.0
STUDIES/PERMITTING - Construction Contractor	0.0	0.0	0.0	0.0	0.0	0.0
DESIGN - Site Management/Operations	0.0	0.0	0.0	0.0	0.0	0.0
DESIGN - Site Infrastructure	0.0	0.0	0.0	0.0	0.0	0.0
DESIGN - National Laboratories	0.0	0.0	0.0	0.0	0.0	0.0
DESIGN - Site Constructors	0.0	0.0	0.0	0.0	0.0	0.0
DESIGN - Architecture/Engineering Contractors	0.0	0.0	0.0	0.0	0.0	0.0
DESIGN - Construction Contractor	0.0	0.0	0.0	0.0	0.0	0.0
CONSTRUCTION/D&D - Site Management/Operations	0.0	0.0	0.0	0.0	0.0	0.0
CONSTRUCTION/D&D - Site Infrastructure	0.0	0.0	0.0	0.0	0.0	0.0
CONSTRUCTION/D&D - National Laboratories	0.0	0.0	0.0	0.0	0.0	0.0
CONSTRUCTION/D&D - Site Constructors	0.0	0.0	0.0	0.0	0.0	0.0
CONSTRUCTION/D&D - Architecture/Engineering Contracto	0.0	0.0	0.0	0.0	0.0	0.0
CONSTRUCTION/D&D - Construction Contractor	0.0	0.0	0.0	0.0	0.0	0.0
OPERATIONS - Site Management/Operations	36.0	36.0	35.9	35.7	35.5	35.2
OPERATIONS - Site Infrastructure	6.4	6.4	6.3	6.3	6.3	6.2
OPERATIONS - National Laboratories	14.5	14.5	14.4	14.3	14.3	14.2
OPERATIONS - Site Constructors	0.0	0.0	0.0	0.0	0.0	0.0
OPERATIONS - Architecture/Engineering Contractors	0.0	0.0	0.0	0.0	0.0	0.0
OPERATIONS - Construction Contractor	0.0	0.0	0.0	0.0	0.0	0.0

Worker Category Base FTE (FTE)	FY06	FY07	FY08	FY09	FY10	FY11
Engineer/Management	10.1	10.1	10.1	10.0	9.9	9.9
Crafts	0.0	0.0	0.0	0.0	0.0	0.0
Maintenance	15.2	15.2	15.1	15.0	14.9	14.8
Operators	25.3	25.3	25.1	25.0	24.9	24.7
Infrastructure	6.4	6.4	6.3	6.3	6.3	6.2
Total	**56.9**	**56.9**	**56.6**	**56.3**	**56.0**	**55.6**

FUNCTION - ALTERNATIVE 1 LLWV	FY12	FY13	FY14	FY15	FY16	FY17	FY18	FY19
Technology Development (Test) Cost	9,486,000	9,427,000	3,730,000	107,000	88,000	30,000	0	0
Perform LLW Cold Operations	0	0	0	0	0	0	0	0
Perform LLW Hot Operations First Year (Hot Test)	0	0	0	0	0	0	0	0
Subtotal Test Costs	9,486,000	9,427,000	3,730,000	107,000	88,000	30,000	0	0
Test Oversight Costs	948,600	942,700	373,000	10,700	8,800	3,000	0	0
Total LLWV Base Costs	**10,434,600**	**10,369,700**	**4,103,000**	**117,700**	**96,800**	**33,000**	**0**	**0**
Total Alt 1 Reddick Costs								
LLWV % of Total Alt 1 Reddick Costs								
Alt 1 LLWV Reddick Costs	**0**	**0**	**0**	**0**	**0**	**0**	**0**	**0**
Alt 1 LLWV Test Costs ($)	**10,434,600**	**10,369,700**	**4,103,000**	**117,700**	**96,800**	**33,000**	**0**	**0**

ALTERNATIVE 1 LLWV BASE COST BREAKDOWN	FY12	FY13	FY14	FY15	FY16	FY17	FY18	FY19
Activity % of Alt 1 LLWV Base Costs (%)								
Studies/Permitting	0	0	0	0	0	0	0	0
Design	0	0	0	0	0	0	0	0
Construction/D&D	0	0	0	0	0	0	0	0
Operation	100	100	100	100	100	100	0	0
Total Percentage	**100**	**100**	**100**	**100**	**100**	**100**	**0**	**0**
Alt 1 LLWV Base Costs($)								
Studies/Permitting	0	0	0	0	0	0	0	0
Design	0	0	0	0	0	0	0	0
Construction/D&D	0	0	0	0	0	0	0	0
Operation	10,434,600	10,369,700	4,103,000	117,700	96,800	33,000	0	0
Total Cost	**10,434,600**	**10,369,700**	**4,103,000**	**117,700**	**96,800**	**33,000**	**0**	**0**

ALTERNATIVE 1 LLWV BASE FTE BREAKDOWN	FY12	FY13	FY14	FY15	FY16	FY17	FY18	FY19
Contractor FTE per Alt 1 LLWV Activity (FTE)								
STUDIES/PERMITTING - Site Management/Operations	0.0	0.0	0.0	0.0	0.0	0.0	0.0	0.0
STUDIES/PERMITTING - Site Infrastructure	0.0	0.0	0.0	0.0	0.0	0.0	0.0	0.0
STUDIES/PERMITTING - National Laboratories	0.0	0.0	0.0	0.0	0.0	0.0	0.0	0.0
STUDIES/PERMITTING - Site Constructors	0.0	0.0	0.0	0.0	0.0	0.0	0.0	0.0
STUDIES/PERMITTING - Architecture/Engineering Contract	0.0	0.0	0.0	0.0	0.0	0.0	0.0	0.0
STUDIES/PERMITTING - Construction Contractor	0.0	0.0	0.0	0.0	0.0	0.0	0.0	0.0
DESIGN - Site Management/Operations	0.0	0.0	0.0	0.0	0.0	0.0	0.0	0.0
DESIGN - Site Infrastructure	0.0	0.0	0.0	0.0	0.0	0.0	0.0	0.0
DESIGN - National Laboratories	0.0	0.0	0.0	0.0	0.0	0.0	0.0	0.0
DESIGN - Site Constructors	0.0	0.0	0.0	0.0	0.0	0.0	0.0	0.0
DESIGN - Architecture/Engineering Contractors	0.0	0.0	0.0	0.0	0.0	0.0	0.0	0.0
DESIGN - Construction Contractor	0.0	0.0	0.0	0.0	0.0	0.0	0.0	0.0
CONSTRUCTION/D&D - Site Management/Operations	0.0	0.0	0.0	0.0	0.0	0.0	0.0	0.0
CONSTRUCTION/D&D - Site Infrastructure	0.0	0.0	0.0	0.0	0.0	0.0	0.0	0.0
CONSTRUCTION/D&D - National Laboratories	0.0	0.0	0.0	0.0	0.0	0.0	0.0	0.0
CONSTRUCTION/D&D - Site Constructors	0.0	0.0	0.0	0.0	0.0	0.0	0.0	0.0
CONSTRUCTION/D&D - Architecture/Engineering Contracto	0.0	0.0	0.0	0.0	0.0	0.0	0.0	0.0
CONSTRUCTION/D&D - Construction Contractor	0.0	0.0	0.0	0.0	0.0	0.0	0.0	0.0
OPERATIONS - Site Management/Operations	34.8	34.6	13.7	0.4	0.3	0.1	0.0	0.0
OPERATIONS - Site Infrastructure	6.1	6.1	2.4	0.1	0.1	0.0	0.0	0.0
OPERATIONS - National Laboratories	14.0	13.9	5.5	0.2	0.1	0.0	0.0	0.0
OPERATIONS - Site Constructors	0.0	0.0	0.0	0.0	0.0	0.0	0.0	0.0
OPERATIONS - Architecture/Engineering Contractors	0.0	0.0	0.0	0.0	0.0	0.0	0.0	0.0
OPERATIONS - Construction Contractor	0.0	0.0	0.0	0.0	0.0	0.0	0.0	0.0

Worker Category Base FTE (FTE)	FY12	FY13	FY14	FY15	FY16	FY17	FY18	FY19
Engineer/Management	9.8	9.7	3.8	0.1	0.1	0.0	0.0	0.0
Crafts	0.0	0.0	0.0	0.0	0.0	0.0	0.0	0.0
Maintenance	14.7	14.6	5.8	0.2	0.1	0.0	0.0	0.0
Operators	24.4	24.3	9.6	0.3	0.2	0.1	0.0	0.0
Infrastructure	6.1	6.1	2.4	0.1	0.1	0.0	0.0	0.0
Total	**55.0**	**54.6**	**21.6**	**0.6**	**0.5**	**0.2**	**0.0**	**0.0**

FUNCTION - ALTERNATIVE 1 LLWV	FY20	FY21	FY22	FY23	FY24	FY25	FY26	FY27	FY28	FY29	FY30
Technology Development (Test) Cost	0	0	0	0	0	0	0	0	0	0	0
Perform LLW Cold Operations	0	0	0	0	0	0	0	0	0	0	0
Perform LLW Hot Operations First Year (Hot Test)	0	0	0	0	0	0	0	0	0	0	0
Subtotal Test Costs	0	0	0	0	0	0	0	0	0	0	0
Test Oversight Costs	0	0	0	0	0	0	0	0	0	0	0
Total LLWV Base Costs	0	0	0	0	0	0	0	0	0	0	0
Total Alt 1 Reddick Costs											
LLWV % of Total Alt 1 Reddick Costs											
Alt 1 LLWV Reddick Costs	0	0	0	0	0	0	0	0	0	0	0
Alt 1 LLWV Test Costs ($)	0	0	0	0	0	0	0	0	0	0	0

ALTERNATIVE 1 LLWV BASE COST BREAKDOWN	FY20	FY21	FY22	FY23	FY24	FY25	FY26	FY27	FY28	FY29	FY30
Activity % of Alt 1 LLWV Base Costs (%)											
Studies/Permitting	0	0	0	0	0	0	0	0	0	0	0
Design	0	0	0	0	0	0	0	0	0	0	0
Construction/D&D	0	0	0	0	0	0	0	0	0	0	0
Operation	0	0	0	0	0	0	0	0	0	0	0
Total Percentage	0	0	0	0	0	0	0	0	0	0	0
Alt 1 LLWV Base Costs($)											
Studies/Permitting	0	0	0	0	0	0	0	0	0	0	0
Design	0	0	0	0	0	0	0	0	0	0	0
Construction/D&D	0	0	0	0	0	0	0	0	0	0	0
Operation	0	0	0	0	0	0	0	0	0	0	0
Total Cost	0	0	0	0	0	0	0	0	0	0	0

ALTERNATIVE 1 LLWV BASE FTE BREAKDOWN	FY20	FY21	FY22	FY23	FY24	FY25	FY26	FY27	FY28	FY29	FY30
Contractor FTE per Alt 1 LLWV Activity (FTE)											
STUDIES/PERMITTING - Site Management/Operations	0.0	0.0	0.0	0.0	0.0	0.0	0.0	0.0	0.0	0.0	0.0
STUDIES/PERMITTING - Site Infrastructure	0.0	0.0	0.0	0.0	0.0	0.0	0.0	0.0	0.0	0.0	0.0
STUDIES/PERMITTING - National Laboratories	0.0	0.0	0.0	0.0	0.0	0.0	0.0	0.0	0.0	0.0	0.0
STUDIES/PERMITTING - Site Constructors	0.0	0.0	0.0	0.0	0.0	0.0	0.0	0.0	0.0	0.0	0.0
STUDIES/PERMITTING - Architecture/Engineering Contract	0.0	0.0	0.0	0.0	0.0	0.0	0.0	0.0	0.0	0.0	0.0
STUDIES/PERMITTING - Construction Contractor	0.0	0.0	0.0	0.0	0.0	0.0	0.0	0.0	0.0	0.0	0.0
DESIGN - Site Management/Operations	0.0	0.0	0.0	0.0	0.0	0.0	0.0	0.0	0.0	0.0	0.0
DESIGN - Site Infrastructure	0.0	0.0	0.0	0.0	0.0	0.0	0.0	0.0	0.0	0.0	0.0
DESIGN - National Laboratories	0.0	0.0	0.0	0.0	0.0	0.0	0.0	0.0	0.0	0.0	0.0
DESIGN - Site Constructors	0.0	0.0	0.0	0.0	0.0	0.0	0.0	0.0	0.0	0.0	0.0
DESIGN - Architecture/Engineering Contractors	0.0	0.0	0.0	0.0	0.0	0.0	0.0	0.0	0.0	0.0	0.0
DESIGN - Construction Contractor	0.0	0.0	0.0	0.0	0.0	0.0	0.0	0.0	0.0	0.0	0.0
CONSTRUCTION/D&D - Site Management/Operations	0.0	0.0	0.0	0.0	0.0	0.0	0.0	0.0	0.0	0.0	0.0
CONSTRUCTION/D&D - Site Infrastructure	0.0	0.0	0.0	0.0	0.0	0.0	0.0	0.0	0.0	0.0	0.0
CONSTRUCTION/D&D - National Laboratories	0.0	0.0	0.0	0.0	0.0	0.0	0.0	0.0	0.0	0.0	0.0
CONSTRUCTION/D&D - Site Constructors	0.0	0.0	0.0	0.0	0.0	0.0	0.0	0.0	0.0	0.0	0.0
CONSTRUCTION/D&D - Architecture/Engineering Contracto	0.0	0.0	0.0	0.0	0.0	0.0	0.0	0.0	0.0	0.0	0.0
CONSTRUCTION/D&D - Construction Contractor	0.0	0.0	0.0	0.0	0.0	0.0	0.0	0.0	0.0	0.0	0.0
OPERATIONS - Site Management/Operations	0.0	0.0	0.0	0.0	0.0	0.0	0.0	0.0	0.0	0.0	0.0
OPERATIONS - Site Infrastructure	0.0	0.0	0.0	0.0	0.0	0.0	0.0	0.0	0.0	0.0	0.0
OPERATIONS - National Laboratories	0.0	0.0	0.0	0.0	0.0	0.0	0.0	0.0	0.0	0.0	0.0
OPERATIONS - Site Constructors	0.0	0.0	0.0	0.0	0.0	0.0	0.0	0.0	0.0	0.0	0.0
OPERATIONS - Architecture/Engineering Contractors	0.0	0.0	0.0	0.0	0.0	0.0	0.0	0.0	0.0	0.0	0.0
OPERATIONS - Construction Contractor	0.0	0.0	0.0	0.0	0.0	0.0	0.0	0.0	0.0	0.0	0.0

Worker Category Base FTE (FTE)	FY20	FY21	FY22	FY23	FY24	FY25	FY26	FY27	FY28	FY29	FY30
Engineer/Management	0.0	0.0	0.0	0.0	0.0	0.0	0.0	0.0	0.0	0.0	0.0
Crafts	0.0	0.0	0.0	0.0	0.0	0.0	0.0	0.0	0.0	0.0	0.0
Maintenance	0.0	0.0	0.0	0.0	0.0	0.0	0.0	0.0	0.0	0.0	0.0
Operators	0.0	0.0	0.0	0.0	0.0	0.0	0.0	0.0	0.0	0.0	0.0
Infrastructure	0.0	0.0	0.0	0.0	0.0	0.0	0.0	0.0	0.0	0.0	0.0
Total	0.0	0.0	0.0	0.0	0.0	0.0	0.0	0.0	0.0	0.0	0.0

FUNCTION - ALTERNATIVE 1 LLWV	FY31	FY32	FY33	FY34	FY35	FY36	FY37	FY38	FY39	FY40
Technology Development (Test) Cost	0	0	0	0	0	0	0	0	0	0
Perform LLW Cold Operations	0	0	0	0	0	0	0	0	0	0
Perform LLW Hot Operations First Year (Hot Test)	0	0	0	0	0	0	0	0	0	0
Subtotal Test Costs	0	0	0	0	0	0	0	0	0	0
Test Oversight Costs	0	0	0	0	0	0	0	0	0	0
Total LLWV Base Costs	0	0	0	0	0	0	0	0	0	0
Total Alt 1 Reddick Costs										
LLWV % of Total Alt 1 Reddick Costs										
Alt 1 LLWV Reddick Costs	0	0	0	0	0	0	0	0	0	0
Alt 1 LLWV Test Costs ($)	0	0	0	0	0	0	0	0	0	0

ALTERNATIVE 1 LLWV BASE COST BREAKDOWN	FY31	FY32	FY33	FY34	FY35	FY36	FY37	FY38	FY39	FY40
Activity % of Alt 1 LLWV Base Costs (%)										
Studies/Permitting	0	0	0	0	0	0	0	0	0	0
Design	0	0	0	0	0	0	0	0	0	0
Construction/D&D	0	0	0	0	0	0	0	0	0	0
Operation	0	0	0	0	0	0	0	0	0	0
Total Percentage	0	0	0	0	0	0	0	0	0	0
Alt 1 LLWV Base Costs($)										
Studies/Permitting	0	0	0	0	0	0	0	0	0	0
Design	0	0	0	0	0	0	0	0	0	0
Construction/D&D	0	0	0	0	0	0	0	0	0	0
Operation	0	0	0	0	0	0	0	0	0	0
Total Cost	0	0	0	0	0	0	0	0	0	0

ALTERNATIVE 1 LLWV BASE FTE BREAKDOWN	FY31	FY32	FY33	FY34	FY35	FY36	FY37	FY38	FY39	FY40
Contractor FTE per Alt 1 LLWV Activity (FTE)										
STUDIES/PERMITTING - Site Management/Operations	0.0	0.0	0.0	0.0	0.0	0.0	0.0	0.0	0.0	0.0
STUDIES/PERMITTING - Site Infrastructure	0.0	0.0	0.0	0.0	0.0	0.0	0.0	0.0	0.0	0.0
STUDIES/PERMITTING - National Laboratories	0.0	0.0	0.0	0.0	0.0	0.0	0.0	0.0	0.0	0.0
STUDIES/PERMITTING - Site Constructors	0.0	0.0	0.0	0.0	0.0	0.0	0.0	0.0	0.0	0.0
STUDIES/PERMITTING - Architecture/Engineering Contract	0.0	0.0	0.0	0.0	0.0	0.0	0.0	0.0	0.0	0.0
STUDIES/PERMITTING - Construction Contractor	0.0	0.0	0.0	0.0	0.0	0.0	0.0	0.0	0.0	0.0
DESIGN - Site Management/Operations	0.0	0.0	0.0	0.0	0.0	0.0	0.0	0.0	0.0	0.0
DESIGN - Site Infrastructure	0.0	0.0	0.0	0.0	0.0	0.0	0.0	0.0	0.0	0.0
DESIGN - National Laboratories	0.0	0.0	0.0	0.0	0.0	0.0	0.0	0.0	0.0	0.0
DESIGN - Site Constructors	0.0	0.0	0.0	0.0	0.0	0.0	0.0	0.0	0.0	0.0
DESIGN - Architecture/Engineering Contractors	0.0	0.0	0.0	0.0	0.0	0.0	0.0	0.0	0.0	0.0
DESIGN - Construction Contractor	0.0	0.0	0.0	0.0	0.0	0.0	0.0	0.0	0.0	0.0
CONSTRUCTION/D&D - Site Management/Operations	0.0	0.0	0.0	0.0	0.0	0.0	0.0	0.0	0.0	0.0
CONSTRUCTION/D&D - Site Infrastructure	0.0	0.0	0.0	0.0	0.0	0.0	0.0	0.0	0.0	0.0
CONSTRUCTION/D&D - National Laboratories	0.0	0.0	0.0	0.0	0.0	0.0	0.0	0.0	0.0	0.0
CONSTRUCTION/D&D - Site Constructors	0.0	0.0	0.0	0.0	0.0	0.0	0.0	0.0	0.0	0.0
CONSTRUCTION/D&D - Architecture/Engineering Contracto	0.0	0.0	0.0	0.0	0.0	0.0	0.0	0.0	0.0	0.0
CONSTRUCTION/D&D - Construction Contractor	0.0	0.0	0.0	0.0	0.0	0.0	0.0	0.0	0.0	0.0
OPERATIONS - Site Management/Operations	0.0	0.0	0.0	0.0	0.0	0.0	0.0	0.0	0.0	0.0
OPERATIONS - Site Infrastructure	0.0	0.0	0.0	0.0	0.0	0.0	0.0	0.0	0.0	0.0
OPERATIONS - National Laboratories	0.0	0.0	0.0	0.0	0.0	0.0	0.0	0.0	0.0	0.0
OPERATIONS - Site Constructors	0.0	0.0	0.0	0.0	0.0	0.0	0.0	0.0	0.0	0.0
OPERATIONS - Architecture/Engineering Contractors	0.0	0.0	0.0	0.0	0.0	0.0	0.0	0.0	0.0	0.0
OPERATIONS - Construction Contractor	0.0	0.0	0.0	0.0	0.0	0.0	0.0	0.0	0.0	0.0

Worker Category Base FTE (FTE)	FY31	FY32	FY33	FY34	FY35	FY36	FY37	FY38	FY39	FY40
Engineer/Management	0.0	0.0	0.0	0.0	0.0	0.0	0.0	0.0	0.0	0.0
Crafts	0.0	0.0	0.0	0.0	0.0	0.0	0.0	0.0	0.0	0.0
Maintenance	0.0	0.0	0.0	0.0	0.0	0.0	0.0	0.0	0.0	0.0
Operators	0.0	0.0	0.0	0.0	0.0	0.0	0.0	0.0	0.0	0.0
Infrastructure	0.0	0.0	0.0	0.0	0.0	0.0	0.0	0.0	0.0	0.0
Total	0.0	0.0	0.0	0.0	0.0	0.0	0.0	0.0	0.0	0.0

FUNCTION - ALTERNATIVE 1 LLWV	Totals
Technology Development (Test) Cost	239,784,000
Perform LLW Cold Operations	
Perform LLW Hot Operations First Year (Hot Test)	44,803,000
Subtotal Test Costs	383,660,000
Test Oversight Costs	38,366,000
Total LLWV Base Costs	422,026,000
Total Alt 1 Reddick Costs	815,000,000
LLWV % of Total Alt 1 Reddick Costs	596
Alt 1 LLWV Reddick Costs	276,650,000
Alt 1 LLWV Test Costs ($)	698,676,000

ALTERNATIVE 1 LLWV BASE COST BREAKDOWN

Activity % of Alt 1 LLWV Base Costs (%)	
Studies/Permitting	
Design	
Construction/D&D	
Operation	
Total Percentage	

Alt 1 LLWV Base Costs($)	Totals
Studies/Permitting	45,881,605
Design	0
Construction/D&D	10,486,025
Operation	365,658,370
Total Cost	422,026,000

ALTERNATIVE 1 LLWV BASE FTE BREAKDOWN	Totals
Contractor FTE per Alt 1 LLWV Activity (FTE)	
STUDIES/PERMITTING - Site Management/Operations	208.9
STUDIES/PERMITTING - Site Infrastructure	36.9
STUDIES/PERMITTING - National Laboratories	61.6
STUDIES/PERMITTING - Site Constructors	0.0
STUDIES/PERMITTING - Architecture/Engineering Contract	0.0
STUDIES/PERMITTING - Construction Contractor	0.0
DESIGN - Site Management/Operations	0.0
DESIGN - Site Infrastructure	0.0
DESIGN - National Laboratories	0.0
DESIGN - Site Constructors	0.0
DESIGN - Architecture/Engineering Contractors	0.0
DESIGN - Construction Contractor	0.0
CONSTRUCTION/D&D - Site Management/Operations	3.2
CONSTRUCTION/D&D - Site Infrastructure	0.6
CONSTRUCTION/D&D - National Laboratories	2.8
CONSTRUCTION/D&D - Site Constructors	3.7
CONSTRUCTION/D&D - Architecture/Engineering Contracto	2.9
CONSTRUCTION/D&D - Construction Contractor	61.7
OPERATIONS - Site Management/Operations	1,221.0
OPERATIONS - Site Infrastructure	215.5
OPERATIONS - National Laboratories	490.5
OPERATIONS - Site Constructors	0.0
OPERATIONS - Architecture/Engineering Contractors	0.0
OPERATIONS - Construction Contractor	0.0

Worker Category Base FTE (FTE)	Totals
Engineer/Management	637.0
Crafts	50.1
Maintenance	513.5
Operators	855.8
Infrastructure	252.9
Total	2,309.3

ALTERNATIVE 1 LLWV REDDICK COST BREAKDOWN	FY95	FY96	FY97	FY98	FY99	FY00
Activity % of Alt 1 LLWV Reddick Costs (%)						
Studies/Permitting	100	100	100	0	0	0
Design	0	0	0	100	100	100
Construction/D&D	0	0	0	0	0	0
Operation	0	0	0	0	0	0
Total Percentage	100	100	100	100	100	100
Alt 1 LLWV Reddick Costs($)						
Studies/Permitting	700,000	700,000	2,100,000	0	0	0
Design	0	0	0	3,500,000	12,250,000	12,250,000
Construction/D&D	0	0	0	0	0	0
Operation	0	0	0	0	0	0
Total Cost	700,000	700,000	2,100,000	3,500,000	12,250,000	12,250,000

ALTERNATIVE 1 LLWV REDDICK FTE BREAKDOWN	FY95	FY96	FY97	FY98	FY99	FY00
Contractor FTE per Alt 1 LLWV Activity (FTE)						
STUDIES/PERMITTING - Site Management/Operations	4.0	4.0	12.1	0.0	0.0	0.0
STUDIES/PERMITTING - Site Infrastructure	0.7	0.7	2.1	0.0	0.0	0.0
STUDIES/PERMITTING - National Laboratories	0.2	0.2	0.6	0.0	0.0	0.0
STUDIES/PERMITTING - Site Constructors	0.0	0.0	0.0	0.0	0.0	0.0
STUDIES/PERMITTING - Architecture/Engineering Contract	0.0	0.0	0.0	0.0	0.0	0.0
STUDIES/PERMITTING - Construction Contractor	0.0	0.0	0.0	0.0	0.0	0.0
DESIGN - Site Management/Operations	0.0	0.0	0.0	2.1	7.4	7.4
DESIGN - Site Infrastructure	0.0	0.0	0.0	0.4	1.3	1.3
DESIGN - National Laboratories	0.0	0.0	0.0	1.9	6.6	6.6
DESIGN - Site Constructors	0.0	0.0	0.0	1.3	4.4	4.4
DESIGN - Architecture/Engineering Contractors	0.0	0.0	0.0	14.6	51.0	51.0
DESIGN - Construction Contractor	0.0	0.0	0.0	0.0	0.0	0.0
CONSTRUCTION/D&D - Site Management/Operations	0.0	0.0	0.0	0.0	0.0	0.0
CONSTRUCTION/D&D - Site Infrastructure	0.0	0.0	0.0	0.0	0.0	0.0
CONSTRUCTION/D&D - National Laboratories	0.0	0.0	0.0	0.0	0.0	0.0
CONSTRUCTION/D&D - Site Constructors	0.0	0.0	0.0	0.0	0.0	0.0
CONSTRUCTION/D&D - Architecture/Engineering Contracto	0.0	0.0	0.0	0.0	0.0	0.0
CONSTRUCTION/D&D - Construction Contractor	0.0	0.0	0.0	0.0	0.0	0.0
OPERATIONS - Site Management/Operations	0.0	0.0	0.0	0.0	0.0	0.0
OPERATIONS - Site Infrastructure	0.0	0.0	0.0	0.0	0.0	0.0
OPERATIONS - National Laboratories	0.0	0.0	0.0	0.0	0.0	0.0
OPERATIONS - Site Constructors	0.0	0.0	0.0	0.0	0.0	0.0
OPERATIONS - Architecture/Engineering Contractors	0.0	0.0	0.0	0.0	0.0	0.0
OPERATIONS - Construction Contractor	0.0	0.0	0.0	0.0	0.0	0.0
Worker Category Reddick FTE (FTE)						
Engineer/Management	4.2	4.2	12.7	19.8	69.4	69.4
Crafts	0.0	0.0	0.0	0.0	0.0	0.0
Maintenance	0.0	0.0	0.0	0.0	0.0	0.0
Operators	0.0	0.0	0.0	0.0	0.0	0.0
Infrastructure	0.7	0.7	2.1	0.4	1.3	1.3
Total	4.9	4.9	14.8	20.2	70.7	70.7

ALTERNATIVE 1 LLWV COST SUMMARY	FY95	FY96	FY97	FY98	FY99	FY00
Studies/Permitting	15,982,850	9,437,300	8,482,640	6,826,160	4,869,480	3,793,175
Design	0	0	0	3,500,000	12,250,000	12,250,000
Construction/D&D	3,056,570	1,747,460	1,595,660	1,706,540	1,623,160	756,635
Operation	12,226,280	6,989,840	7,978,300	8,532,700	9,738,960	10,592,890
Total	31,265,700	18,174,600	18,056,600	20,565,400	28,481,600	27,382,700

ALTERNATIVE 1 LLWV FTE SUMMARY	FY95	FY96	FY97	FY98	FY99	FY00
Engineer/Management	112.8	66.3	61.5	72.0	111.0	103.4
Crafts	14.6	8.3	7.6	8.2	7.8	3.6
Maintenance	17.2	9.8	11.2	12.0	13.7	14.9
Operators	28.6	16.4	18.7	20.0	22.8	24.8
Infrastructure	20.4	11.9	12.1	11.0	11.1	10.6
Total	193.6	112.8	111.0	123.1	166.3	157.3

ALTERNATIVE 1 LLWV REDDICK COST BREAKDOWN	FY01	FY02	FY03	FY04	FY05
Activity % of Alt 1 LLWV Reddick Costs (%)					
Studies/Permitting	0	0	0	0	0
Design	30	0	0	0	0
Construction/D&D	70	100	100	80	50
Operation	0	0	0	20	50
Total Percentage	100	100	100	100	100
Alt 1 LLWV Reddick Costs($)					
Studies/Permitting	0	0	0	0	0
Design	3,675,000	0	0	0	0
Construction/D&D	8,575,000	35,750,000	34,500,000	28,520,000	29,250,000
Operation	0	0	0	7,130,000	29,250,000
Total Cost	12,250,000	35,750,000	34,500,000	35,650,000	58,500,000

ALTERNATIVE 1 LLWV REDDICK FTE BREAKDOWN	FY01	FY02	FY03	FY04	FY05
Contractor FTE per Alt 1 LLWV Activity (FTE)					
STUDIES/PERMITTING - Site Management/Operations	0.0	0.0	0.0	0.0	0.0
STUDIES/PERMITTING - Site Infrastructure	0.0	0.0	0.0	0.0	0.0
STUDIES/PERMITTING - National Laboratories	0.0	0.0	0.0	0.0	0.0
STUDIES/PERMITTING - Site Constructors	0.0	0.0	0.0	0.0	0.0
STUDIES/PERMITTING - Architecture/Engineering Contract	0.0	0.0	0.0	0.0	0.0
STUDIES/PERMITTING - Construction Contractor	0.0	0.0	0.0	0.0	0.0
DESIGN - Site Management/Operations	2.2	0.0	0.0	0.0	0.0
DESIGN - Site Infrastructure	0.4	0.0	0.0	0.0	0.0
DESIGN - National Laboratories	2.0	0.0	0.0	0.0	0.0
DESIGN - Site Constructors	1.3	0.0	0.0	0.0	0.0
DESIGN - Architecture/Engineering Contractors	15.3	0.0	0.0	0.0	0.0
DESIGN - Construction Contractor	0.0	0.0	0.0	0.0	0.0
CONSTRUCTION/D&D - Site Management/Operations	5.2	22.3	20.9	17.3	17.8
CONSTRUCTION/D&D - Site Infrastructure	0.9	3.9	3.7	3.1	3.1
CONSTRUCTION/D&D - National Laboratories	0.0	0.0	0.0	0.0	0.0
CONSTRUCTION/D&D - Site Constructors	3.1	13.1	12.3	10.2	10.4
CONSTRUCTION/D&D - Architecture/Engineering Contracto	2.4	10.2	9.6	7.9	8.1
CONSTRUCTION/D&D - Construction Contractor	50.4	216.2	202.9	167.8	172.1
OPERATIONS - Site Management/Operations	0.0	0.0	0.0	30.3	124.3
OPERATIONS - Site Infrastructure	0.0	0.0	0.0	5.3	21.9
OPERATIONS - National Laboratories	0.0	0.0	0.0	3.8	15.7
OPERATIONS - Site Constructors	0.0	0.0	0.0	0.0	0.0
OPERATIONS - Architecture/Engineering Contractors	0.0	0.0	0.0	0.0	0.0
OPERATIONS - Construction Contractor	0.0	0.0	0.0	0.0	0.0
Worker Category Reddick FTE (FTE)					
Engineer/Management	41.0	86.3	81.0	73.8	96.7
Crafts	41.0	175.6	164.8	136.2	139.7
Maintenance	0.0	0.0	0.0	10.2	42.0
Operators	0.0	0.0	0.0	17.1	70.0
Infrastructure	1.3	3.9	3.7	8.4	25.1
Total	83.2	265.8	249.5	245.7	373.5

ALTERNATIVE 1 LLWV COST SUMMARY	FY01	FY02	FY03	FY04	FY05
Studies/Permitting	0	0	0	0	0
Design	3,675,000	0	0	0	0
Construction/D&D	8,575,000	36,750,000	34,500,000	28,520,000	29,250,000
Operation	14,232,900	13,228,600	42,398,400	61,530,500	125,252,500
Total	26,482,900	49,978,600	76,898,400	90,050,500	154,502,500

ALTERNATIVE 1 LLWV FTE SUMMARY	FY01	FY02	FY03	FY04	FY05
Engineer/Management	54.3	98.6	120.7	124.7	186.5
Crafts	41.0	175.6	164.8	136.2	139.7
Maintenance	20.0	18.6	59.5	86.6	176.8
Operators	33.3	31.0	99.2	144.4	294.7
Infrastructure	9.7	11.7	28.7	40.5	81.6
Total	158.2	335.5	472.9	532.4	879.4

ALTERNATIVE 1 LLWV REDDICK COST BREAKDOWN	FY06	FY07	FY08	FY09	FY10	FY11
Activity % of Alt 1 LLWV Reddick Costs (%)						
Studies/Permitting	0	0	0	0	0	0
Design	0	0	0	0	0	0
Construction/D&D	0	0	0	0	0	0
Operation	100	100	100	100	100	0
Total Percentage	100	100	100	100	100	0
Alt 1 LLWV Reddick Costs($)						
Studies/Permitting	0	0	0	0	0	0
Design	0	0	0	0	0	0
Construction/D&D	0	0	0	0	0	0
Operation	15,300,000	15,300,000	15,300,000	10,800,000	10,800,000	0
Total Cost	15,300,000	15,300,000	15,300,000	10,800,000	10,800,000	0

ALTERNATIVE 1 LLWV REDDICK FTE BREAKDOWN	FY06	FY07	FY08	FY09	FY10	FY11
Contractor FTE per Alt 1 LLWV Activity (FTE)						
STUDIES/PERMITTING - Site Management/Operations	0.0	0.0	0.0	0.0	0.0	0.0
STUDIES/PERMITTING - Site Infrastructure	0.0	0.0	0.0	0.0	0.0	0.0
STUDIES/PERMITTING - National Laboratories	0.0	0.0	0.0	0.0	0.0	0.0
STUDIES/PERMITTING - Site Constructors	0.0	0.0	0.0	0.0	0.0	0.0
STUDIES/PERMITTING - Architecture/Engineering Contract	0.0	0.0	0.0	0.0	0.0	0.0
STUDIES/PERMITTING - Construction Contractor	0.0	0.0	0.0	0.0	0.0	0.0
DESIGN - Site Management/Operations	0.0	0.0	0.0	0.0	0.0	0.0
DESIGN - Site Infrastructure	0.0	0.0	0.0	0.0	0.0	0.0
DESIGN - National Laboratories	0.0	0.0	0.0	0.0	0.0	0.0
DESIGN - Site Constructors	0.0	0.0	0.0	0.0	0.0	0.0
DESIGN - Architecture/Engineering Contractors	0.0	0.0	0.0	0.0	0.0	0.0
DESIGN - Construction Contractor	0.0	0.0	0.0	0.0	0.0	0.0
CONSTRUCTION/D&D - Site Management/Operations	0.0	0.0	0.0	0.0	0.0	0.0
CONSTRUCTION/D&D - Site Infrastructure	0.0	0.0	0.0	0.0	0.0	0.0
CONSTRUCTION/D&D - National Laboratories	0.0	0.0	0.0	0.0	0.0	0.0
CONSTRUCTION/D&D - Site Constructors	0.0	0.0	0.0	0.0	0.0	0.0
CONSTRUCTION/D&D - Architecture/Engineering Contracto	0.0	0.0	0.0	0.0	0.0	0.0
CONSTRUCTION/D&D - Construction Contractor	0.0	0.0	0.0	0.0	0.0	0.0
OPERATIONS - Site Management/Operations	65.0	65.0	65.0	45.9	45.9	0.0
OPERATIONS - Site Infrastructure	11.5	11.5	11.5	8.1	8.1	0.0
OPERATIONS - National Laboratories	8.2	8.2	8.2	5.8	5.8	0.0
OPERATIONS - Site Constructors	0.0	0.0	0.0	0.0	0.0	0.0
OPERATIONS - Architecture/Engineering Contractors	0.0	0.0	0.0	0.0	0.0	0.0
OPERATIONS - Construction Contractor	0.0	0.0	0.0	0.0	0.0	0.0
Worker Category Reddick FTE (FTE)						
Engineer/Management	14.6	14.6	14.6	10.3	10.3	0.0
Crafts	0.0	0.0	0.0	0.0	0.0	0.0
Maintenance	22.0	22.0	22.0	15.5	15.5	0.0
Operators	36.6	36.6	36.6	25.8	25.8	0.0
Infrastructure	11.5	11.5	11.5	8.1	8.1	0.0
Total	84.7	84.7	84.7	59.8	59.8	0.0

ALTERNATIVE 1 LLWV COST SUMMARY	FY06	FY07	FY08	FY09	FY10	FY11
Studies/Permitting	0	0	0	0	0	0
Design	0	0	0	0	0	0
Construction/D&D	0	0	0	0	0	0
Operation	26,091,000	26,091,000	26,036,000	21,482,100	21,426,000	10,555,600
Total	26,091,000	26,091,000	26,036,000	21,482,100	21,426,000	10,555,600

ALTERNATIVE 1 LLWV FTE SUMMARY	FY06	FY07	FY08	FY09	FY10	FY11
Engineer/Management	24.7	24.7	24.7	20.3	20.3	9.9
Crafts	0.0	0.0	0.0	0.0	0.0	0.0
Maintenance	37.1	37.1	37.0	30.5	30.4	14.8
Operators	61.9	61.9	61.7	50.8	50.7	24.7
Infrastructure	17.8	17.8	17.8	14.4	14.4	6.2
Total	141.6	141.6	141.3	116.1	115.8	55.6

ALTERNATIVE 1 LLWV REDDICK COST BREAKDOWN	FY12	FY13	FY14	FY15	FY16	FY17	FY18	FY19
Activity % of Alt 1 LLWV Reddick Costs (%)								
Studies/Permitting	0	0	0	0	0	0	0	0
Design	0	0	0	0	0	0	0	0
Construction/D&D	0	0	0	0	0	0	0	0
Operation	0	0	0	0	0	0	0	0
Total Percentage	0	0	0	0	0	0	0	0
Alt 1 LLWV Reddick Costs($)								
Studies/Permitting	0	0	0	0	0	0	0	0
Design	0	0	0	0	0	0	0	0
Construction/D&D	0	0	0	0	0	0	0	0
Operation	0	0	0	0	0	0	0	0
Total Cost	0	0	0	0	0	0	0	0

ALTERNATIVE 1 LLWV REDDICK FTE BREAKDOWN	FY12	FY13	FY14	FY15	FY16	FY17	FY18	FY19
Contractor FTE per Alt 1 LLWV Activity (FTE)								
STUDIES/PERMITTING - Site Management/Operations	0.0	0.0	0.0	0.0	0.0	0.0	0.0	0.0
STUDIES/PERMITTING - Site Infrastructure	0.0	0.0	0.0	0.0	0.0	0.0	0.0	0.0
STUDIES/PERMITTING - National Laboratories	0.0	0.0	0.0	0.0	0.0	0.0	0.0	0.0
STUDIES/PERMITTING - Site Constructors	0.0	0.0	0.0	0.0	0.0	0.0	0.0	0.0
STUDIES/PERMITTING - Architecture/Engineering Contract	0.0	0.0	0.0	0.0	0.0	0.0	0.0	0.0
STUDIES/PERMITTING - Construction Contractor	0.0	0.0	0.0	0.0	0.0	0.0	0.0	0.0
DESIGN - Site Management/Operations	0.0	0.0	0.0	0.0	0.0	0.0	0.0	0.0
DESIGN - Site Infrastructure	0.0	0.0	0.0	0.0	0.0	0.0	0.0	0.0
DESIGN - National Laboratories	0.0	0.0	0.0	0.0	0.0	0.0	0.0	0.0
DESIGN - Site Constructors	0.0	0.0	0.0	0.0	0.0	0.0	0.0	0.0
DESIGN - Architecture/Engineering Contractors	0.0	0.0	0.0	0.0	0.0	0.0	0.0	0.0
DESIGN - Construction Contractor	0.0	0.0	0.0	0.0	0.0	0.0	0.0	0.0
CONSTRUCTION/D&D - Site Management/Operations	0.0	0.0	0.0	0.0	0.0	0.0	0.0	0.0
CONSTRUCTION/D&D - Site Infrastructure	0.0	0.0	0.0	0.0	0.0	0.0	0.0	0.0
CONSTRUCTION/D&D - National Laboratories	0.0	0.0	0.0	0.0	0.0	0.0	0.0	0.0
CONSTRUCTION/D&D - Site Constructors	0.0	0.0	0.0	0.0	0.0	0.0	0.0	0.0
CONSTRUCTION/D&D - Architecture/Engineering Contracto	0.0	0.0	0.0	0.0	0.0	0.0	0.0	0.0
CONSTRUCTION/D&D - Construction Contractor	0.0	0.0	0.0	0.0	0.0	0.0	0.0	0.0
OPERATIONS - Site Management/Operations	0.0	0.0	0.0	0.0	0.0	0.0	0.0	0.0
OPERATIONS - Site Infrastructure	0.0	0.0	0.0	0.0	0.0	0.0	0.0	0.0
OPERATIONS - National Laboratories	0.0	0.0	0.0	0.0	0.0	0.0	0.0	0.0
OPERATIONS - Site Constructors	0.0	0.0	0.0	0.0	0.0	0.0	0.0	0.0
OPERATIONS - Architecture/Engineering Contractors	0.0	0.0	0.0	0.0	0.0	0.0	0.0	0.0
OPERATIONS - Construction Contractor	0.0	0.0	0.0	0.0	0.0	0.0	0.0	0.0
Worker Category Reddick FTE (FTE)								
Engineer/Management	0.0	0.0	0.0	0.0	0.0	0.0	0.0	0.0
Crafts	0.0	0.0	0.0	0.0	0.0	0.0	0.0	0.0
Maintenance	0.0	0.0	0.0	0.0	0.0	0.0	0.0	0.0
Operators	0.0	0.0	0.0	0.0	0.0	0.0	0.0	0.0
Infrastructure	0.0	0.0	0.0	0.0	0.0	0.0	0.0	0.0
Total	0.0	0.0	0.0	0.0	0.0	0.0	0.0	0.0

ALTERNATIVE 1 LLWV COST SUMMARY	FY12	FY13	FY14	FY15	FY16	FY17	FY18	FY19
Studies/Permitting	0	0	0	0	0	0	0	0
Design	0	0	0	0	0	0	0	0
Construction/D&D	0	0	0	0	0	0	0	0
Operation	10,434,600	10,369,700	4,103,000	117,700	98,800	33,000	0	0
Total	10,434,600	10,369,700	4,103,000	117,700	98,800	33,000	0	0

ALTERNATIVE 1 LLWV FTE SUMMARY	FY12	FY13	FY14	FY15	FY16	FY17	FY18	FY19
Engineer/Management	9.8	9.7	3.8	0.1	0.1	0.0	0.0	0.0
Crafts	0.0	0.0	0.0	0.0	0.0	0.0	0.0	0.0
Maintenance	14.7	14.6	5.8	0.2	0.1	0.0	0.0	0.0
Operators	24.4	24.3	9.6	0.3	0.2	0.1	0.0	0.0
Infrastructure	6.1	6.1	2.4	0.1	0.1	0.0	0.0	0.0
Total	55.0	54.6	21.6	0.6	0.5	0.2	0.0	0.0

ALTERNATIVE 1 LLWV REDDICK COST BREAKDOWN	FY20	FY21	FY22	FY23	FY24	FY25	FY26	FY27	FY28	FY29	FY30
Activity % of Alt 1 LLWV Reddick Costs (%)											
Studies/Permitting	0	0	0	0	0	0	0	0	0	0	0
Design	0	0	0	0	0	0	0	0	0	0	0
Construction/D&D	0	0	0	0	0	0	0	0	0	0	0
Operation	0	0	0	0	0	0	0	0	0	0	0
Total Percentage	0	0	0	0	0	0	0	0	0	0	0
Alt 1 LLWV Reddick Costs($)											
Studies/Permitting	0	0	0	0	0	0	0	0	0	0	0
Design	0	0	0	0	0	0	0	0	0	0	0
Construction/D&D	0	0	0	0	0	0	0	0	0	0	0
Operation	0	0	0	0	0	0	0	0	0	0	0
Total Cost	0	0	0	0	0	0	0	0	0	0	0

ALTERNATIVE 1 LLWV REDDICK FTE BREAKDOWN	FY20	FY21	FY22	FY23	FY24	FY25	FY26	FY27	FY28	FY29	FY30
Contractor FTE per Alt 1 LLWV Activity (FTE)											
STUDIES/PERMITTING - Site Management/Operations	0.0	0.0	0.0	0.0	0.0	0.0	0.0	0.0	0.0	0.0	0.0
STUDIES/PERMITTING - Site Infrastructure	0.0	0.0	0.0	0.0	0.0	0.0	0.0	0.0	0.0	0.0	0.0
STUDIES/PERMITTING - National Laboratories	0.0	0.0	0.0	0.0	0.0	0.0	0.0	0.0	0.0	0.0	0.0
STUDIES/PERMITTING - Site Constructors	0.0	0.0	0.0	0.0	0.0	0.0	0.0	0.0	0.0	0.0	0.0
STUDIES/PERMITTING - Architecture/Engineering Contract	0.0	0.0	0.0	0.0	0.0	0.0	0.0	0.0	0.0	0.0	0.0
STUDIES/PERMITTING - Construction Contractor	0.0	0.0	0.0	0.0	0.0	0.0	0.0	0.0	0.0	0.0	0.0
DESIGN - Site Management/Operations	0.0	0.0	0.0	0.0	0.0	0.0	0.0	0.0	0.0	0.0	0.0
DESIGN - Site Infrastructure	0.0	0.0	0.0	0.0	0.0	0.0	0.0	0.0	0.0	0.0	0.0
DESIGN - National Laboratories	0.0	0.0	0.0	0.0	0.0	0.0	0.0	0.0	0.0	0.0	0.0
DESIGN - Site Constructors	0.0	0.0	0.0	0.0	0.0	0.0	0.0	0.0	0.0	0.0	0.0
DESIGN - Architecture/Engineering Contractors	0.0	0.0	0.0	0.0	0.0	0.0	0.0	0.0	0.0	0.0	0.0
DESIGN - Construction Contractor	0.0	0.0	0.0	0.0	0.0	0.0	0.0	0.0	0.0	0.0	0.0
CONSTRUCTION/D&D - Site Management/Operations	0.0	0.0	0.0	0.0	0.0	0.0	0.0	0.0	0.0	0.0	0.0
CONSTRUCTION/D&D - Site Infrastructure	0.0	0.0	0.0	0.0	0.0	0.0	0.0	0.0	0.0	0.0	0.0
CONSTRUCTION/D&D - National Laboratories	0.0	0.0	0.0	0.0	0.0	0.0	0.0	0.0	0.0	0.0	0.0
CONSTRUCTION/D&D - Site Constructors	0.0	0.0	0.0	0.0	0.0	0.0	0.0	0.0	0.0	0.0	0.0
CONSTRUCTION/D&D - Architecture/Engineering Contracto	0.0	0.0	0.0	0.0	0.0	0.0	0.0	0.0	0.0	0.0	0.0
CONSTRUCTION/D&D - Construction Contractor	0.0	0.0	0.0	0.0	0.0	0.0	0.0	0.0	0.0	0.0	0.0
OPERATIONS - Site Management/Operations	0.0	0.0	0.0	0.0	0.0	0.0	0.0	0.0	0.0	0.0	0.0
OPERATIONS - Site Infrastructure	0.0	0.0	0.0	0.0	0.0	0.0	0.0	0.0	0.0	0.0	0.0
OPERATIONS - National Laboratories	0.0	0.0	0.0	0.0	0.0	0.0	0.0	0.0	0.0	0.0	0.0
OPERATIONS - Site Constructors	0.0	0.0	0.0	0.0	0.0	0.0	0.0	0.0	0.0	0.0	0.0
OPERATIONS - Architecture/Engineering Contractors	0.0	0.0	0.0	0.0	0.0	0.0	0.0	0.0	0.0	0.0	0.0
OPERATIONS - Construction Contractor	0.0	0.0	0.0	0.0	0.0	0.0	0.0	0.0	0.0	0.0	0.0
Worker Category Reddick FTE (FTE)											
Engineer/Management	0.0	0.0	0.0	0.0	0.0	0.0	0.0	0.0	0.0	0.0	0.0
Crafts	0.0	0.0	0.0	0.0	0.0	0.0	0.0	0.0	0.0	0.0	0.0
Maintenance	0.0	0.0	0.0	0.0	0.0	0.0	0.0	0.0	0.0	0.0	0.0
Operators	0.0	0.0	0.0	0.0	0.0	0.0	0.0	0.0	0.0	0.0	0.0
Infrastructure	0.0	0.0	0.0	0.0	0.0	0.0	0.0	0.0	0.0	0.0	0.0
Total	0.0	0.0	0.0	0.0	0.0	0.0	0.0	0.0	0.0	0.0	0.0

ALTERNATIVE 1 LLWV COST SUMMARY	FY20	FY21	FY22	FY23	FY24	FY25	FY26	FY27	FY28	FY29	FY30
Studies/Permitting	0	0	0	0	0	0	0	0	0	0	0
Design	0	0	0	0	0	0	0	0	0	0	0
Construction/D&D	0	0	0	0	0	0	0	0	0	0	0
Operation	0	0	0	0	0	0	0	0	0	0	0
Total	0	0	0	0	0	0	0	0	0	0	0

ALTERNATIVE 1 LLWV FTE SUMMARY	FY20	FY21	FY22	FY23	FY24	FY25	FY26	FY27	FY28	FY29	FY30
Engineer/Management	0.0	0.0	0.0	0.0	0.0	0.0	0.0	0.0	0.0	0.0	0.0
Crafts	0.0	0.0	0.0	0.0	0.0	0.0	0.0	0.0	0.0	0.0	0.0
Maintenance	0.0	0.0	0.0	0.0	0.0	0.0	0.0	0.0	0.0	0.0	0.0
Operators	0.0	0.0	0.0	0.0	0.0	0.0	0.0	0.0	0.0	0.0	0.0
Infrastructure	0.0	0.0	0.0	0.0	0.0	0.0	0.0	0.0	0.0	0.0	0.0
Total	0.0	0.0	0.0	0.0	0.0	0.0	0.0	0.0	0.0	0.0	0.0

ALTERNATIVE 1 LLWV REDDICK COST BREAKDOWN	FY31	FY32	FY33	FY34	FY35	FY36	FY37	FY38	FY39	FY40
Activity % of Alt 1 LLWV Reddick Costs (%)										
Studies/Permitting	0	0	0	0	0	0	0	0	0	0
Design	0	0	0	0	0	0	0	0	0	0
Construction/D&D	0	0	0	0	0	0	0	0	0	0
Operation	0	0	0	0	0	0	0	0	0	0
Total Percentage	0	0	0	0	0	0	0	0	0	0
Alt 1 LLWV Reddick Costs($)										
Studies/Permitting	0	0	0	0	0	0	0	0	0	0
Design	0	0	0	0	0	0	0	0	0	0
Construction/D&D	0	0	0	0	0	0	0	0	0	0
Operation	0	0	0	0	0	0	0	0	0	0
Total Cost	0	0	0	0	0	0	0	0	0	0

ALTERNATIVE 1 LLWV REDDICK FTE BREAKDOWN	FY31	FY32	FY33	FY34	FY35	FY36	FY37	FY38	FY39	FY40
Contractor FTE per Alt 1 LLWV Activity (FTE)										
STUDIES/PERMITTING - Site Management/Operations	0.0	0.0	0.0	0.0	0.0	0.0	0.0	0.0	0.0	0.0
STUDIES/PERMITTING - Site Infrastructure	0.0	0.0	0.0	0.0	0.0	0.0	0.0	0.0	0.0	0.0
STUDIES/PERMITTING - National Laboratories	0.0	0.0	0.0	0.0	0.0	0.0	0.0	0.0	0.0	0.0
STUDIES/PERMITTING - Site Constructors	0.0	0.0	0.0	0.0	0.0	0.0	0.0	0.0	0.0	0.0
STUDIES/PERMITTING - Architecture/Engineering Contract	0.0	0.0	0.0	0.0	0.0	0.0	0.0	0.0	0.0	0.0
STUDIES/PERMITTING - Construction Contractor	0.0	0.0	0.0	0.0	0.0	0.0	0.0	0.0	0.0	0.0
DESIGN - Site Management/Operations	0.0	0.0	0.0	0.0	0.0	0.0	0.0	0.0	0.0	0.0
DESIGN - Site Infrastructure	0.0	0.0	0.0	0.0	0.0	0.0	0.0	0.0	0.0	0.0
DESIGN - National Laboratories	0.0	0.0	0.0	0.0	0.0	0.0	0.0	0.0	0.0	0.0
DESIGN - Site Constructors	0.0	0.0	0.0	0.0	0.0	0.0	0.0	0.0	0.0	0.0
DESIGN - Architecture/Engineering Contractors	0.0	0.0	0.0	0.0	0.0	0.0	0.0	0.0	0.0	0.0
DESIGN - Construction Contractor	0.0	0.0	0.0	0.0	0.0	0.0	0.0	0.0	0.0	0.0
CONSTRUCTION/D&D - Site Management/Operations	0.0	0.0	0.0	0.0	0.0	0.0	0.0	0.0	0.0	0.0
CONSTRUCTION/D&D - Site Infrastructure	0.0	0.0	0.0	0.0	0.0	0.0	0.0	0.0	0.0	0.0
CONSTRUCTION/D&D - National Laboratories	0.0	0.0	0.0	0.0	0.0	0.0	0.0	0.0	0.0	0.0
CONSTRUCTION/D&D - Site Constructors	0.0	0.0	0.0	0.0	0.0	0.0	0.0	0.0	0.0	0.0
CONSTRUCTION/D&D - Architecture/Engineering Contracto	0.0	0.0	0.0	0.0	0.0	0.0	0.0	0.0	0.0	0.0
CONSTRUCTION/D&D - Construction Contractor	0.0	0.0	0.0	0.0	0.0	0.0	0.0	0.0	0.0	0.0
OPERATIONS - Site Management/Operations	0.0	0.0	0.0	0.0	0.0	0.0	0.0	0.0	0.0	0.0
OPERATIONS - Site Infrastructure	0.0	0.0	0.0	0.0	0.0	0.0	0.0	0.0	0.0	0.0
OPERATIONS - National Laboratories	0.0	0.0	0.0	0.0	0.0	0.0	0.0	0.0	0.0	0.0
OPERATIONS - Site Constructors	0.0	0.0	0.0	0.0	0.0	0.0	0.0	0.0	0.0	0.0
OPERATIONS - Architecture/Engineering Contractors	0.0	0.0	0.0	0.0	0.0	0.0	0.0	0.0	0.0	0.0
OPERATIONS - Construction Contractor	0.0	0.0	0.0	0.0	0.0	0.0	0.0	0.0	0.0	0.0
Worker Category Reddick FTE (FTE)										
Engineer/Management	0.0	0.0	0.0	0.0	0.0	0.0	0.0	0.0	0.0	0.0
Crafts	0.0	0.0	0.0	0.0	0.0	0.0	0.0	0.0	0.0	0.0
Maintenance	0.0	0.0	0.0	0.0	0.0	0.0	0.0	0.0	0.0	0.0
Operators	0.0	0.0	0.0	0.0	0.0	0.0	0.0	0.0	0.0	0.0
Infrastructure	0.0	0.0	0.0	0.0	0.0	0.0	0.0	0.0	0.0	0.0
Total	0.0	0.0	0.0	0.0	0.0	0.0	0.0	0.0	0.0	0.0

ALTERNATIVE 1 LLWV COST SUMMARY	FY31	FY32	FY33	FY34	FY35	FY36	FY37	FY38	FY39	FY40
Studies/Permitting	0	0	0	0	0	0	0	0	0	0
Design	0	0	0	0	0	0	0	0	0	0
Construction/D&D	0	0	0	0	0	0	0	0	0	0
Operation	0	0	0	0	0	0	0	0	0	0
Total	0	0	0	0	0	0	0	0	0	0

ALTERNATIVE 1 LLWV FTE SUMMARY	FY31	FY32	FY33	FY34	FY35	FY36	FY37	FY38	FY39	FY40
Engineer/Management	0.0	0.0	0.0	0.0	0.0	0.0	0.0	0.0	0.0	0.0
Crafts	0.0	0.0	0.0	0.0	0.0	0.0	0.0	0.0	0.0	0.0
Maintenance	0.0	0.0	0.0	0.0	0.0	0.0	0.0	0.0	0.0	0.0
Operators	0.0	0.0	0.0	0.0	0.0	0.0	0.0	0.0	0.0	0.0
Infrastructure	0.0	0.0	0.0	0.0	0.0	0.0	0.0	0.0	0.0	0.0
Total	0.0	0.0	0.0	0.0	0.0	0.0	0.0	0.0	0.0	0.0

ALTERNATIVE 1 LLWV REDDICK COST BREAKDOWN

Activity % of Alt 1 LLWV Reddick Costs (%)	
Studies/Permitting	
Design	
Construction/D&D	
Operation	
Total Percentage	

Alt 1 LLWV Reddick Costs($)	Totals
Studies/Permitting	3,500,000
Design	31,675,000
Construction/D&D	137,595,000
Operation	103,880,000
Total Cost	276,650,000

ALTERNATIVE 1 LLWV REDDICK FTE BREAKDOWN	Totals
Contractor FTE per Alt 1 LLWV Activity (FTE)	
STUDIES/PERMITTING - Site Management/Operations	20.2
STUDIES/PERMITTING - Site Infrastructure	3.6
STUDIES/PERMITTING - National Laboratories	0.9
STUDIES/PERMITTING - Site Constructors	0.0
STUDIES/PERMITTING - Architecture/Engineering Contract	0.0
STUDIES/PERMITTING - Construction Contractor	0.0
DESIGN - Site Management/Operations	19.2
DESIGN - Site Infrastructure	3.4
DESIGN - National Laboratories	17.0
DESIGN - Site Constructors	11.3
DESIGN - Architecture/Engineering Contractors	132.0
DESIGN - Construction Contractor	0.0
CONSTRUCTION/D&D - Site Management/Operations	83.5
CONSTRUCTION/D&D - Site Infrastructure	14.7
CONSTRUCTION/D&D - National Laboratories	0.0
CONSTRUCTION/D&D - Site Constructors	49.1
CONSTRUCTION/D&D - Architecture/Engineering Contracto	38.2
CONSTRUCTION/D&D - Construction Contractor	809.4
OPERATIONS - Site Management/Operations	441.5
OPERATIONS - Site Infrastructure	77.9
OPERATIONS - National Laboratories	55.7
OPERATIONS - Site Constructors	0.0
OPERATIONS - Architecture/Engineering Contractors	0.0
OPERATIONS - Construction Contractor	0.0
Worker Category Reddick FTE (FTE)	
Engineer/Management	623.0
Crafts	657.3
Maintenance	149.2
Operators	248.6
Infrastructure	99.6
Total	1,777.8

ALTERNATIVE 1 LLWV COST SUMMARY	Totals
Studies/Permitting	49,381,605
Design	31,675,000
Construction/D&D	148,081,025
Operation	469,538,370
Total	698,676,000

ALTERNATIVE 1 LLWV FTE SUMMARY	Totals
Engineer/Management	1,260.1
Crafts	707.4
Maintenance	662.6
Operators	1,104.4
Infrastructure	352.5
Total	4,087.1

FUNCTION - ALTERNATIVE 1 HLWV	FY95	FY96	FY97	FY98	FY99	FY00
Technology Development (Test) Cost	13,582,327	17,101,894	15,321,558	1,124,209	0	0
Perform HLW Hot Operations First Year (Hot Test)	0	0	0	0	0	0
Perform HLW Cold Operations	0	0	0	0	0	0
Subtotal Test Costs	13,582,327	17,101,894	15,321,558	1,124,209	0	0
Test Oversight Costs	0	0	0	0	0	0
Total HLWV Base Costs	**13,582,327**	**17,101,894**	**15,321,558**	**1,124,209**	**0**	**0**
Total Alt 1 Reddick Costs	*2,000,000*	*2,000,000*	*6,000,000*	*10,000,000*	*35,000,000*	*35,000,000*
LLWV % of Total Alt 1 Reddick Costs	*35*	*35*	*35*	*35*	*35*	*35*
Alt 1 LLWV Reddick Costs	**700,000**	**700,000**	**2,100,000**	**3,500,000**	**12,250,000**	**12,250,000**
Alternative 1 HLWV Test Costs ($)	**14,282,327**	**17,801,894**	**17,421,558**	**4,624,209**	**12,250,000**	**12,250,000**

ALTERNATIVE 1 HLWV BASE COST BREAKDOWN	FY95	FY96	FY97	FY98	FY99	FY00
Activity % of Alternative 1 HLWV Base Costs (%)						
Studies/Permitting	45	45	40	25	0	0
Design	5	5	0	0	0	0
Construction/D&D	10	10	10	5	0	0
Operation	40	40	50	70	0	0
Total Percentage	**100**	**100**	**100**	**100**	**0**	**0**
Alternative 1 HLWV Base Costs($)						
Studies/Permitting	6,112,047	7,695,852	6,128,623	281,052	0	0
Design	679,116	855,095	0	0	0	0
Construction/D&D	1,358,233	1,710,189	1,532,156	56,210	0	0
Operation	5,432,931	6,840,758	7,660,779	786,946	0	0
Total Cost	**13,582,327**	**17,101,894**	**15,321,558**	**1,124,209**	**0**	**0**

ALTERNATIVE 1 HLWV BASE FTE BREAKDOWN	FY95	FY96	FY97	FY98	FY99	FY00
Contractor FTE per Alternative 1 HLWV Activity (FTE)						
STUDIES/PERMITTING - Site Management/Operations	27.8	35.0	27.9	1.3	0.0	0.0
STUDIES/PERMITTING - Site Infrastructure	4.9	6.2	4.9	0.2	0.0	0.0
STUDIES/PERMITTING - National Laboratories	8.2	10.3	8.2	0.4	0.0	0.0
STUDIES/PERMITTING - Site Constructors	0.0	0.0	0.0	0.0	0.0	0.0
STUDIES/PERMITTING - Architecture/Engineering Contract	0.0	0.0	0.0	0.0	0.0	0.0
STUDIES/PERMITTING - Construction Contractor	0.0	0.0	0.0	0.0	0.0	0.0
DESIGN - Site Management/Operations	0.4	0.5	0.0	0.0	0.0	0.0
DESIGN - Site Infrastructure	0.1	0.1	0.0	0.0	0.0	0.0
DESIGN - National Laboratories	0.4	0.5	0.0	0.0	0.0	0.0
DESIGN - Site Constructors	0.2	0.3	0.0	0.0	0.0	0.0
DESIGN - Architecture/Engineering Contractors	2.8	3.6	0.0	0.0	0.0	0.0
DESIGN - Construction Contractor	0.0	0.0	0.0	0.0	0.0	0.0
CONSTRUCTION/D&D - Site Management/Operations	0.4	0.5	0.5	0.0	0.0	0.0
CONSTRUCTION/D&D - Site Infrastructure	0.1	0.1	0.1	0.0	0.0	0.0
CONSTRUCTION/D&D - National Laboratories	0.4	0.5	0.4	0.0	0.0	0.0
CONSTRUCTION/D&D - Site Constructors	0.5	0.6	0.5	0.0	0.0	0.0
CONSTRUCTION/D&D - Architecture/Engineering Contracto	0.4	0.5	0.4	0.0	0.0	0.0
CONSTRUCTION/D&D - Construction Contractor	8.0	10.1	9.0	0.3	0.0	0.0
OPERATIONS - Site Management/Operations	18.1	22.8	25.6	2.6	0.0	0.0
OPERATIONS - Site Infrastructure	3.2	4.0	4.5	0.5	0.0	0.0
OPERATIONS - National Laboratories	7.3	9.2	10.3	1.1	0.0	0.0
OPERATIONS - Site Constructors	0.0	0.0	0.0	0.0	0.0	0.0
OPERATIONS - Architecture/Engineering Contractors	0.0	0.0	0.0	0.0	0.0	0.0
OPERATIONS - Construction Contractor	0.0	0.0	0.0	0.0	0.0	0.0

Worker Category Base FTE (FTE)	FY95	FY96	FY97	FY98	FY99	FY00
Engineer/Management	48.1	60.6	46.8	2.5	0.0	0.0
Crafts	6.5	8.2	7.3	0.3	0.0	0.0
Maintenance	7.6	9.6	10.8	1.1	0.0	0.0
Operators	12.7	16.0	17.9	1.8	0.0	0.0
Infrastructure	8.3	10.4	9.5	0.7	0.0	0.0
Total	**83.2**	**104.8**	**92.4**	**6.4**	**0.0**	**0.0**

FUNCTION - ALTERNATIVE 1 HLWV	FY01	FY02	FY03	FY04	FY05
Technology Development (Test) Cost	0	0	0	0	0
Perform HLW Hot Operations First Year (Hot Test)	0	0	0	0	0
Perform HLW Cold Operations	0	0	0	857,272	16,282,120
Subtotal Test Costs	0	0	0	857,272	16,282,120
Test Oversight Costs	0	0	0	0	0
Total HLWV Base Costs	0	0	0	857,272	16,282,120
Total Alt 1 Reddick Costs	*35,000,000*	*105,000,000*	*150,000,000*	*155,000,000*	*130,000,000*
LLWV % of Total Alt 1 Reddick Costs	*35*	*35*	*23*	*23*	*45*
Alt 1 LLWV Reddick Costs	12,250,000	36,750,000	34,500,000	35,650,000	58,500,000
Alternative 1 HLWV Test Costs ($)	12,250,000	36,750,000	34,500,000	36,507,272	74,782,120

ALTERNATIVE 1 HLWV BASE COST BREAKDOWN	FY01	FY02	FY03	FY04	FY05
Activity % of Alternative 1 HLWV Base Costs (%)					
Studies/Permitting	0	0	0	0	0
Design	0	0	0	0	0
Construction/D&D	0	0	0	0	0
Operation	0	0	0	100	100
Total Percentage	0	0	0	100	100
Alternative 1 HLWV Base Costs($)					
Studies/Permitting	0	0	0	0	0
Design	0	0	0	0	0
Construction/D&D	0	0	0	0	0
Operation	0	0	0	857,272	16,282,120
Total Cost	0	0	0	857,272	16,282,120

ALTERNATIVE 1 HLWV BASE FTE BREAKDOWN	FY01	FY02	FY03	FY04	FY05
Contractor FTE per Alternative 1 HLWV Activity (FTE)					
STUDIES/PERMITTING - Site Management/Operations	0.0	0.0	0.0	0.0	0.0
STUDIES/PERMITTING - Site Infrastructure	0.0	0.0	0.0	0.0	0.0
STUDIES/PERMITTING - National Laboratories	0.0	0.0	0.0	0.0	0.0
STUDIES/PERMITTING - Site Constructors	0.0	0.0	0.0	0.0	0.0
STUDIES/PERMITTING - Architecture/Engineering Contract	0.0	0.0	0.0	0.0	0.0
STUDIES/PERMITTING - Construction Contractor	0.0	0.0	0.0	0.0	0.0
DESIGN - Site Management/Operations	0.0	0.0	0.0	0.0	0.0
DESIGN - Site Infrastructure	0.0	0.0	0.0	0.0	0.0
DESIGN - National Laboratories	0.0	0.0	0.0	0.0	0.0
DESIGN - Site Constructors	0.0	0.0	0.0	0.0	0.0
DESIGN - Architecture/Engineering Contractors	0.0	0.0	0.0	0.0	0.0
DESIGN - Construction Contractor	0.0	0.0	0.0	0.0	0.0
CONSTRUCTION/D&D - Site Management/Operations	0.0	0.0	0.0	0.0	0.0
CONSTRUCTION/D&D - Site Infrastructure	0.0	0.0	0.0	0.0	0.0
CONSTRUCTION/D&D - National Laboratories	0.0	0.0	0.0	0.0	0.0
CONSTRUCTION/D&D - Site Constructors	0.0	0.0	0.0	0.0	0.0
CONSTRUCTION/D&D - Architecture/Engineering Contracto	0.0	0.0	0.0	0.0	0.0
CONSTRUCTION/D&D - Construction Contractor	0.0	0.0	0.0	0.0	0.0
OPERATIONS - Site Management/Operations	0.0	0.0	0.0	2.9	54.4
OPERATIONS - Site Infrastructure	0.0	0.0	0.0	0.5	9.6
OPERATIONS - National Laboratories	0.0	0.0	0.0	1.2	21.8
OPERATIONS - Site Constructors	0.0	0.0	0.0	0.0	0.0
OPERATIONS - Architecture/Engineering Contractors	0.0	0.0	0.0	0.0	0.0
OPERATIONS - Construction Contractor	0.0	0.0	0.0	0.0	0.0

Worker Category Base FTE (FTE)	FY01	FY02	FY03	FY04	FY05
Engineer/Management	0.0	0.0	0.0	0.8	15.2
Crafts	0.0	0.0	0.0	0.0	0.0
Maintenance	0.0	0.0	0.0	1.2	22.9
Operators	0.0	0.0	0.0	2.0	38.1
Infrastructure	0.0	0.0	0.0	0.5	9.6
Total	0.0	0.0	0.0	4.5	85.8

FUNCTION - ALTERNATIVE 1 HLWV	FY06	FY07	FY08	FY09	FY10	FY11
Technology Development (Test) Cost	0	0	0	0	0	0
Perform HLW Hot Operations First Year (Hot Test)	0	0	0	0	219,742,768	0
Perform HLW Cold Operations	36,334,800	58,298,612	78,584,160	6,753,131	0	0
Subtotal Test Costs	36,334,800	58,298,612	78,584,160	6,753,131	219,742,768	0
Test Oversight Costs	0	0	0	0	0	0
Total HLWV Base Costs	**36,334,800**	**58,298,612**	**78,584,160**	**6,753,131**	**219,742,768**	**0**
Total Alt 1 Reddick Costs	*34,000,000*	*34,000,000*	*34,000,000*	*24,000,000*	*24,000,000*	
LLWV % of Total Alt 1 Reddick Costs	*45*	*45*	*45*	*45*	*45*	
Alt 1 LLWV Reddick Costs	**15,300,000**	**15,300,000**	**15,300,000**	**10,800,000**	**10,800,000**	**0**
Alternative 1 HLWV Test Costs ($)	**51,634,800**	**73,598,612**	**93,884,160**	**17,553,131**	**230,542,768**	**0**

ALTERNATIVE 1 HLWV BASE COST BREAKDOWN	FY06	FY07	FY08	FY09	FY10	FY11
Activity % of Alternative 1 HLWV Base Costs (%)						
Studies/Permitting	0	0	0	0	0	0
Design	0	0	0	0	0	0
Construction/D&D	0	0	0	0	0	0
Operation	100	100	100	100	100	0
Total Percentage	**100**	**100**	**100**	**100**	**100**	**0**
Alternative 1 HLWV Base Costs($)						
Studies/Permitting	0	0	0	0	0	0
Design	0	0	0	0	0	0
Construction/D&D	0	0	0	0	0	0
Operation	36,334,800	58,298,612	78,584,160	6,753,131	219,742,768	0
Total Cost	**36,334,800**	**58,298,612**	**78,584,160**	**6,753,131**	**219,742,768**	**0**

ALTERNATIVE 1 HLWV BASE FTE BREAKDOWN	FY06	FY07	FY08	FY09	FY10	FY11
Contractor FTE per Alternative 1 HLWV Activity (FTE)						
STUDIES/PERMITTING - Site Management/Operations	0.0	0.0	0.0	0.0	0.0	0.0
STUDIES/PERMITTING - Site Infrastructure	0.0	0.0	0.0	0.0	0.0	0.0
STUDIES/PERMITTING - National Laboratories	0.0	0.0	0.0	0.0	0.0	0.0
STUDIES/PERMITTING - Site Constructors	0.0	0.0	0.0	0.0	0.0	0.0
STUDIES/PERMITTING - Architecture/Engineering Contract	0.0	0.0	0.0	0.0	0.0	0.0
STUDIES/PERMITTING - Construction Contractor	0.0	0.0	0.0	0.0	0.0	0.0
DESIGN - Site Management/Operations	0.0	0.0	0.0	0.0	0.0	0.0
DESIGN - Site Infrastructure	0.0	0.0	0.0	0.0	0.0	0.0
DESIGN - National Laboratories	0.0	0.0	0.0	0.0	0.0	0.0
DESIGN - Site Constructors	0.0	0.0	0.0	0.0	0.0	0.0
DESIGN - Architecture/Engineering Contractors	0.0	0.0	0.0	0.0	0.0	0.0
DESIGN - Construction Contractor	0.0	0.0	0.0	0.0	0.0	0.0
CONSTRUCTION/D&D - Site Management/Operations	0.0	0.0	0.0	0.0	0.0	0.0
CONSTRUCTION/D&D - Site Infrastructure	0.0	0.0	0.0	0.0	0.0	0.0
CONSTRUCTION/D&D - National Laboratories	0.0	0.0	0.0	0.0	0.0	0.0
CONSTRUCTION/D&D - Site Constructors	0.0	0.0	0.0	0.0	0.0	0.0
CONSTRUCTION/D&D - Architecture/Engineering Contracto	0.0	0.0	0.0	0.0	0.0	0.0
CONSTRUCTION/D&D - Construction Contractor	0.0	0.0	0.0	0.0	0.0	0.0
OPERATIONS - Site Management/Operations	121.3	194.7	262.4	22.6	733.8	0.0
OPERATIONS - Site Infrastructure	21.4	34.4	46.3	4.0	129.5	0.0
OPERATIONS - National Laboratories	48.7	78.2	105.4	9.1	294.8	0.0
OPERATIONS - Site Constructors	0.0	0.0	0.0	0.0	0.0	0.0
OPERATIONS - Architecture/Engineering Contractors	0.0	0.0	0.0	0.0	0.0	0.0
OPERATIONS - Construction Contractor	0.0	0.0	0.0	0.0	0.0	0.0

Worker Category Base FTE (FTE)	FY06	FY07	FY08	FY09	FY10	FY11
Engineer/Management	34.0	54.6	73.6	6.3	205.7	0.0
Crafts	0.0	0.0	0.0	0.0	0.0	0.0
Maintenance	51.0	81.9	110.4	9.5	308.6	0.0
Operators	85.0	136.4	183.9	15.8	514.3	0.0
Infrastructure	21.4	34.4	46.3	4.0	129.5	0.0
Total	**191.5**	**307.2**	**414.1**	**35.6**	**1,158.1**	**0.0**

FUNCTION - ALTERNATIVE 1 HLWV	FY12	FY13	FY14	FY15	FY16	FY17	FY18	FY19
Technology Development (Test) Cost	0	0	0	0	0	0	0	0
Perform HLW Hot Operations First Year (Hot Test)	0	0	0	0	0	0	0	0
Perform HLW Cold Operations	0	0	0	0	0	0	0	0
Subtotal Test Costs	0	0	0	0	0	0	0	0
Test Oversight Costs	0	0	0	0	0	0	0	0
Total HLWV Base Costs	0	0	0	0	0	0	0	0
Total Alt 1 Reddick Costs								
LLWV % of Total Alt 1 Reddick Costs								
Alt 1 LLWV Reddick Costs	0	0	0	0	0	0	0	0
Alternative 1 HLWV Test Costs ($)	0	0	0	0	0	0	0	0

ALTERNATIVE 1 HLWV BASE COST BREAKDOWN	FY12	FY13	FY14	FY15	FY16	FY17	FY18	FY19
Activity % of Alternative 1 HLWV Base Costs (%)								
Studies/Permitting	0	0	0	0	0	0	0	0
Design	0	0	0	0	0	0	0	0
Construction/D&D	0	0	0	0	0	0	0	0
Operation	0	0	0	0	0	0	0	0
Total Percentage	0	0	0	0	0	0	0	0
Alternative 1 HLWV Base Costs($)								
Studies/Permitting	0	0	0	0	0	0	0	0
Design	0	0	0	0	0	0	0	0
Construction/D&D	0	0	0	0	0	0	0	0
Operation	0	0	0	0	0	0	0	0
Total Cost	0	0	0	0	0	0	0	0

ALTERNATIVE 1 HLWV BASE FTE BREAKDOWN	FY12	FY13	FY14	FY15	FY16	FY17	FY18	FY19
Contractor FTE per Alternative 1 HLWV Activity (FTE)								
STUDIES/PERMITTING - Site Management/Operations	0.0	0.0	0.0	0.0	0.0	0.0	0.0	0.0
STUDIES/PERMITTING - Site Infrastructure	0.0	0.0	0.0	0.0	0.0	0.0	0.0	0.0
STUDIES/PERMITTING - National Laboratories	0.0	0.0	0.0	0.0	0.0	0.0	0.0	0.0
STUDIES/PERMITTING - Site Constructors	0.0	0.0	0.0	0.0	0.0	0.0	0.0	0.0
STUDIES/PERMITTING - Architecture/Engineering Contract	0.0	0.0	0.0	0.0	0.0	0.0	0.0	0.0
STUDIES/PERMITTING - Construction Contractor	0.0	0.0	0.0	0.0	0.0	0.0	0.0	0.0
DESIGN - Site Management/Operations	0.0	0.0	0.0	0.0	0.0	0.0	0.0	0.0
DESIGN - Site Infrastructure	0.0	0.0	0.0	0.0	0.0	0.0	0.0	0.0
DESIGN - National Laboratories	0.0	0.0	0.0	0.0	0.0	0.0	0.0	0.0
DESIGN - Site Constructors	0.0	0.0	0.0	0.0	0.0	0.0	0.0	0.0
DESIGN - Architecture/Engineering Contractors	0.0	0.0	0.0	0.0	0.0	0.0	0.0	0.0
DESIGN - Construction Contractor	0.0	0.0	0.0	0.0	0.0	0.0	0.0	0.0
CONSTRUCTION/D&D - Site Management/Operations	0.0	0.0	0.0	0.0	0.0	0.0	0.0	0.0
CONSTRUCTION/D&D - Site Infrastructure	0.0	0.0	0.0	0.0	0.0	0.0	0.0	0.0
CONSTRUCTION/D&D - National Laboratories	0.0	0.0	0.0	0.0	0.0	0.0	0.0	0.0
CONSTRUCTION/D&D - Site Constructors	0.0	0.0	0.0	0.0	0.0	0.0	0.0	0.0
CONSTRUCTION/D&D - Architecture/Engineering Contracto	0.0	0.0	0.0	0.0	0.0	0.0	0.0	0.0
CONSTRUCTION/D&D - Construction Contractor	0.0	0.0	0.0	0.0	0.0	0.0	0.0	0.0
OPERATIONS - Site Management/Operations	0.0	0.0	0.0	0.0	0.0	0.0	0.0	0.0
OPERATIONS - Site Infrastructure	0.0	0.0	0.0	0.0	0.0	0.0	0.0	0.0
OPERATIONS - National Laboratories	0.0	0.0	0.0	0.0	0.0	0.0	0.0	0.0
OPERATIONS - Site Constructors	0.0	0.0	0.0	0.0	0.0	0.0	0.0	0.0
OPERATIONS - Architecture/Engineering Contractors	0.0	0.0	0.0	0.0	0.0	0.0	0.0	0.0
OPERATIONS - Construction Contractor	0.0	0.0	0.0	0.0	0.0	0.0	0.0	0.0

Worker Category Base FTE (FTE)	FY12	FY13	FY14	FY15	FY16	FY17	FY18	FY19
Engineer/Management	0.0	0.0	0.0	0.0	0.0	0.0	0.0	0.0
Crafts	0.0	0.0	0.0	0.0	0.0	0.0	0.0	0.0
Maintenance	0.0	0.0	0.0	0.0	0.0	0.0	0.0	0.0
Operators	0.0	0.0	0.0	0.0	0.0	0.0	0.0	0.0
Infrastructure	0.0	0.0	0.0	0.0	0.0	0.0	0.0	0.0
Total	0.0	0.0	0.0	0.0	0.0	0.0	0.0	0.0

FUNCTION - ALTERNATIVE 1 HLWV	FY20	FY21	FY22	FY23	FY24	FY25	FY26	FY27	FY28	FY29	FY30
Technology Development (Test) Cost	0	0	0	0	0	0	0	0	0	0	0
Perform HLW Hot Operations First Year (Hot Test)	0	0	0	0	0	0	0	0	0	0	0
Perform HLW Cold Operations	0	0	0	0	0	0	0	0	0	0	0
Subtotal Test Costs	0	0	0	0	0	0	0	0	0	0	0
Test Oversight Costs	0	0	0	0	0	0	0	0	0	0	0
Total HLWV Base Costs	0	0	0	0	0	0	0	0	0	0	0
Total Alt 1 Reddick Costs											
LLWV % of Total Alt 1 Reddick Costs											
Alt 1 LLWV Reddick Costs	0	0	0	0	0	0	0	0	0	0	0
Alternative 1 HLWV Test Costs ($)	0	0	0	0	0	0	0	0	0	0	0

ALTERNATIVE 1 HLWV BASE COST BREAKDOWN	FY20	FY21	FY22	FY23	FY24	FY25	FY26	FY27	FY28	FY29	FY30
Activity % of Alternative 1 HLWV Base Costs (%)											
Studies/Permitting	0	0	0	0	0	0	0	0	0	0	0
Design	0	0	0	0	0	0	0	0	0	0	0
Construction/D&D	0	0	0	0	0	0	0	0	0	0	0
Operation	0	0	0	0	0	0	0	0	0	0	0
Total Percentage	0	0	0	0	0	0	0	0	0	0	0
Alternative 1 HLWV Base Costs($)											
Studies/Permitting	0	0	0	0	0	0	0	0	0	0	0
Design	0	0	0	0	0	0	0	0	0	0	0
Construction/D&D	0	0	0	0	0	0	0	0	0	0	0
Operation	0	0	0	0	0	0	0	0	0	0	0
Total Cost	0	0	0	0	0	0	0	0	0	0	0

ALTERNATIVE 1 HLWV BASE FTE BREAKDOWN	FY20	FY21	FY22	FY23	FY24	FY25	FY26	FY27	FY28	FY29	FY30
Contractor FTE per Alternative 1 HLWV Activity (FTE)											
STUDIES/PERMITTING - Site Management/Operations	0.0	0.0	0.0	0.0	0.0	0.0	0.0	0.0	0.0	0.0	0.0
STUDIES/PERMITTING - Site Infrastructure	0.0	0.0	0.0	0.0	0.0	0.0	0.0	0.0	0.0	0.0	0.0
STUDIES/PERMITTING - National Laboratories	0.0	0.0	0.0	0.0	0.0	0.0	0.0	0.0	0.0	0.0	0.0
STUDIES/PERMITTING - Site Constructors	0.0	0.0	0.0	0.0	0.0	0.0	0.0	0.0	0.0	0.0	0.0
STUDIES/PERMITTING - Architecture/Engineering Contract	0.0	0.0	0.0	0.0	0.0	0.0	0.0	0.0	0.0	0.0	0.0
STUDIES/PERMITTING - Construction Contractor	0.0	0.0	0.0	0.0	0.0	0.0	0.0	0.0	0.0	0.0	0.0
DESIGN - Site Management/Operations	0.0	0.0	0.0	0.0	0.0	0.0	0.0	0.0	0.0	0.0	0.0
DESIGN - Site Infrastructure	0.0	0.0	0.0	0.0	0.0	0.0	0.0	0.0	0.0	0.0	0.0
DESIGN - National Laboratories	0.0	0.0	0.0	0.0	0.0	0.0	0.0	0.0	0.0	0.0	0.0
DESIGN - Site Constructors	0.0	0.0	0.0	0.0	0.0	0.0	0.0	0.0	0.0	0.0	0.0
DESIGN - Architecture/Engineering Contractors	0.0	0.0	0.0	0.0	0.0	0.0	0.0	0.0	0.0	0.0	0.0
DESIGN - Construction Contractor	0.0	0.0	0.0	0.0	0.0	0.0	0.0	0.0	0.0	0.0	0.0
CONSTRUCTION/D&D - Site Management/Operations	0.0	0.0	0.0	0.0	0.0	0.0	0.0	0.0	0.0	0.0	0.0
CONSTRUCTION/D&D - Site Infrastructure	0.0	0.0	0.0	0.0	0.0	0.0	0.0	0.0	0.0	0.0	0.0
CONSTRUCTION/D&D - National Laboratories	0.0	0.0	0.0	0.0	0.0	0.0	0.0	0.0	0.0	0.0	0.0
CONSTRUCTION/D&D - Site Constructors	0.0	0.0	0.0	0.0	0.0	0.0	0.0	0.0	0.0	0.0	0.0
CONSTRUCTION/D&D - Architecture/Engineering Contracto	0.0	0.0	0.0	0.0	0.0	0.0	0.0	0.0	0.0	0.0	0.0
CONSTRUCTION/D&D - Construction Contractor	0.0	0.0	0.0	0.0	0.0	0.0	0.0	0.0	0.0	0.0	0.0
OPERATIONS - Site Management/Operations	0.0	0.0	0.0	0.0	0.0	0.0	0.0	0.0	0.0	0.0	0.0
OPERATIONS - Site Infrastructure	0.0	0.0	0.0	0.0	0.0	0.0	0.0	0.0	0.0	0.0	0.0
OPERATIONS - National Laboratories	0.0	0.0	0.0	0.0	0.0	0.0	0.0	0.0	0.0	0.0	0.0
OPERATIONS - Site Constructors	0.0	0.0	0.0	0.0	0.0	0.0	0.0	0.0	0.0	0.0	0.0
OPERATIONS - Architecture/Engineering Contractors	0.0	0.0	0.0	0.0	0.0	0.0	0.0	0.0	0.0	0.0	0.0
OPERATIONS - Construction Contractor	0.0	0.0	0.0	0.0	0.0	0.0	0.0	0.0	0.0	0.0	0.0

Worker Category Base FTE (FTE)	FY20	FY21	FY22	FY23	FY24	FY25	FY26	FY27	FY28	FY29	FY30
Engineer/Management	0.0	0.0	0.0	0.0	0.0	0.0	0.0	0.0	0.0	0.0	0.0
Crafts	0.0	0.0	0.0	0.0	0.0	0.0	0.0	0.0	0.0	0.0	0.0
Maintenance	0.0	0.0	0.0	0.0	0.0	0.0	0.0	0.0	0.0	0.0	0.0
Operators	0.0	0.0	0.0	0.0	0.0	0.0	0.0	0.0	0.0	0.0	0.0
Infrastructure	0.0	0.0	0.0	0.0	0.0	0.0	0.0	0.0	0.0	0.0	0.0
Total	0.0	0.0	0.0	0.0	0.0	0.0	0.0	0.0	0.0	0.0	0.0

FUNCTION - ALTERNATIVE 1 HLWV	FY31	FY32	FY33	FY34	FY35	FY36	FY37	FY38	FY39	FY40
Technology Development (Test) Cost	0	0	0	0	0	0	0	0	0	0
Perform HLW Hot Operations First Year (Hot Test)	0	0	0	0	0	0	0	0	0	0
Perform HLW Cold Operations	0	0	0	0	0	0	0	0	0	0
Subtotal Test Costs	0	0	0	0	0	0	0	0	0	0
Test Oversight Costs	0	0	0	0	0	0	0	0	0	0
Total HLWV Base Costs	0	0	0	0	0	0	0	0	0	0
Total Alt 1 Reddick Costs										
LLWV % of Total Alt 1 Reddick Costs										
Alt 1 LLWV Reddick Costs	0	0	0	0	0	0	0	0	0	0
Alternative 1 HLWV Test Costs ($)	0	0	0	0	0	0	0	0	0	0

ALTERNATIVE 1 HLWV BASE COST BREAKDOWN	FY31	FY32	FY33	FY34	FY35	FY36	FY37	FY38	FY39	FY40
Activity % of Alternative 1 HLWV Base Costs (%)										
Studies/Permitting	0	0	0	0	0	0	0	0	0	0
Design	0	0	0	0	0	0	0	0	0	0
Construction/D&D	0	0	0	0	0	0	0	0	0	0
Operation	0	0	0	0	0	0	0	0	0	0
Total Percentage	0	0	0	0	0	0	0	0	0	0
Alternative 1 HLWV Base Costs($)										
Studies/Permitting	0	0	0	0	0	0	0	0	0	0
Design	0	0	0	0	0	0	0	0	0	0
Construction/D&D	0	0	0	0	0	0	0	0	0	0
Operation	0	0	0	0	0	0	0	0	0	0
Total Cost	0	0	0	0	0	0	0	0	0	0

ALTERNATIVE 1 HLWV BASE FTE BREAKDOWN	FY31	FY32	FY33	FY34	FY35	FY36	FY37	FY38	FY39	FY40
Contractor FTE per Alternative 1 HLWV Activity (FTE)										
STUDIES/PERMITTING - Site Management/Operations	0.0	0.0	0.0	0.0	0.0	0.0	0.0	0.0	0.0	0.0
STUDIES/PERMITTING - Site Infrastructure	0.0	0.0	0.0	0.0	0.0	0.0	0.0	0.0	0.0	0.0
STUDIES/PERMITTING - National Laboratories	0.0	0.0	0.0	0.0	0.0	0.0	0.0	0.0	0.0	0.0
STUDIES/PERMITTING - Site Constructors	0.0	0.0	0.0	0.0	0.0	0.0	0.0	0.0	0.0	0.0
STUDIES/PERMITTING - Architecture/Engineering Contract	0.0	0.0	0.0	0.0	0.0	0.0	0.0	0.0	0.0	0.0
STUDIES/PERMITTING - Construction Contractor	0.0	0.0	0.0	0.0	0.0	0.0	0.0	0.0	0.0	0.0
DESIGN - Site Management/Operations	0.0	0.0	0.0	0.0	0.0	0.0	0.0	0.0	0.0	0.0
DESIGN - Site Infrastructure	0.0	0.0	0.0	0.0	0.0	0.0	0.0	0.0	0.0	0.0
DESIGN - National Laboratories	0.0	0.0	0.0	0.0	0.0	0.0	0.0	0.0	0.0	0.0
DESIGN - Site Constructors	0.0	0.0	0.0	0.0	0.0	0.0	0.0	0.0	0.0	0.0
DESIGN - Architecture/Engineering Contractors	0.0	0.0	0.0	0.0	0.0	0.0	0.0	0.0	0.0	0.0
DESIGN - Construction Contractor	0.0	0.0	0.0	0.0	0.0	0.0	0.0	0.0	0.0	0.0
CONSTRUCTION/D&D - Site Management/Operations	0.0	0.0	0.0	0.0	0.0	0.0	0.0	0.0	0.0	0.0
CONSTRUCTION/D&D - Site Infrastructure	0.0	0.0	0.0	0.0	0.0	0.0	0.0	0.0	0.0	0.0
CONSTRUCTION/D&D - National Laboratories	0.0	0.0	0.0	0.0	0.0	0.0	0.0	0.0	0.0	0.0
CONSTRUCTION/D&D - Site Constructors	0.0	0.0	0.0	0.0	0.0	0.0	0.0	0.0	0.0	0.0
CONSTRUCTION/D&D - Architecture/Engineering Contracto	0.0	0.0	0.0	0.0	0.0	0.0	0.0	0.0	0.0	0.0
CONSTRUCTION/D&D - Construction Contractor	0.0	0.0	0.0	0.0	0.0	0.0	0.0	0.0	0.0	0.0
OPERATIONS - Site Management/Operations	0.0	0.0	0.0	0.0	0.0	0.0	0.0	0.0	0.0	0.0
OPERATIONS - Site Infrastructure	0.0	0.0	0.0	0.0	0.0	0.0	0.0	0.0	0.0	0.0
OPERATIONS - National Laboratories	0.0	0.0	0.0	0.0	0.0	0.0	0.0	0.0	0.0	0.0
OPERATIONS - Site Constructors	0.0	0.0	0.0	0.0	0.0	0.0	0.0	0.0	0.0	0.0
OPERATIONS - Architecture/Engineering Contractors	0.0	0.0	0.0	0.0	0.0	0.0	0.0	0.0	0.0	0.0
OPERATIONS - Construction Contractor	0.0	0.0	0.0	0.0	0.0	0.0	0.0	0.0	0.0	0.0

Worker Category Base FTE (FTE)	FY31	FY32	FY33	FY34	FY35	FY36	FY37	FY38	FY39	FY40
Engineer/Management	0.0	0.0	0.0	0.0	0.0	0.0	0.0	0.0	0.0	0.0
Crafts	0.0	0.0	0.0	0.0	0.0	0.0	0.0	0.0	0.0	0.0
Maintenance	0.0	0.0	0.0	0.0	0.0	0.0	0.0	0.0	0.0	0.0
Operators	0.0	0.0	0.0	0.0	0.0	0.0	0.0	0.0	0.0	0.0
Infrastructure	0.0	0.0	0.0	0.0	0.0	0.0	0.0	0.0	0.0	0.0
Total	0.0	0.0	0.0	0.0	0.0	0.0	0.0	0.0	0.0	0.0

FUNCTION - ALTERNATIVE 1 HLWV	Totals
Technology Development (Test) Cost	47,129,988
Perform HLW Hot Operations First Year (Hot Test)	219,742,768
Perform HLW Cold Operations	197,110,095
Subtotal Test Costs	463,982,851
Test Oversight Costs	0
Total HLWV Base Costs	463,982,851
Total Alt 1 Reddick Costs	815,000,000
LLWV % of Total Alt 1 Reddick Costs	.596
Alt 1 LLWV Reddick Costs	276,650,000
Alternative 1 HLWV Test Costs ($)	740,632,851

ALTERNATIVE 1 HLWV BASE COST BREAKDOWN

Activity % of Alternative 1 HLWV Base Costs (%)	
Studies/Permitting	
Design	
Construction/D&D	
Operation	
Total Percentage	

Alternative 1 HLWV Base Costs($)	**Totals**
Studies/Permitting	20,217,575
Design	1,534,211
Construction/D&D	4,656,788
Operation	437,574,277
Total Cost	463,982,851

ALTERNATIVE 1 HLWV BASE FTE BREAKDOWN	**Totals**
Contractor FTE per Alternative 1 HLWV Activity (FTE)	
STUDIES/PERMITTING - Site Management/Operations	92.1
STUDIES/PERMITTING - Site Infrastructure	16.2
STUDIES/PERMITTING - National Laboratories	27.1
STUDIES/PERMITTING - Site Constructors	0.0
STUDIES/PERMITTING - Architecture/Engineering Contract	0.0
STUDIES/PERMITTING - Construction Contractor	0.0
DESIGN - Site Management/Operations	0.9
DESIGN - Site Infrastructure	0.2
DESIGN - National Laboratories	0.8
DESIGN - Site Constructors	0.5
DESIGN - Architecture/Engineering Contractors	6.4
DESIGN - Construction Contractor	0.0
CONSTRUCTION/D&D - Site Management/Operations	1.4
CONSTRUCTION/D&D - Site Infrastructure	0.2
CONSTRUCTION/D&D - National Laboratories	1.2
CONSTRUCTION/D&D - Site Constructors	1.7
CONSTRUCTION/D&D - Architecture/Engineering Contracto	1.3
CONSTRUCTION/D&D - Construction Contractor	27.4
OPERATIONS - Site Management/Operations	1,461.2
OPERATIONS - Site Infrastructure	257.9
OPERATIONS - National Laboratories	587.0
OPERATIONS - Site Constructors	0.0
OPERATIONS - Architecture/Engineering Contractors	0.0
OPERATIONS - Construction Contractor	0.0

Worker Category Base FTE (FTE)	**Totals**
Engineer/Management	548.3
Crafts	22.2
Maintenance	614.5
Operators	1,024.1
Infrastructure	274.5
Total	2,483.6

ALTERNATIVE 1 HLWV REDDICK COST BREAKDOWN	FY95	FY96	FY97	FY98	FY99	FY00
Activity % of Alternative 1 HLWV Reddick Costs (%)						
Studies/Permitting	100	100	100	0	0	0
Design	0	0	0	100	100	30
Construction/D&D	0	0	0	0	0	70
Operation	0	0	0	0	0	0
Total Percentage	100	100	100	100	100	100
Alternative 1 HLWV Reddick Costs($)						
Studies/Permitting	700,000	700,000	2,100,000	0	0	0
Design	0	0	0	3,500,000	12,250,000	3,675,000
Construction/D&D	0	0	0	0	0	8,575,000
Operation	0	0	0	0	0	0
Total Cost	700,000	700,000	2,100,000	3,500,000	12,250,000	12,250,000

ALTERNATIVE 1 HLWV REDDICK FTE BREAKDOWN	FY95	FY96	FY97	FY98	FY99	FY00
Contractor FTE per Alternative 1 HLWV Activity (FTE)						
STUDIES/PERMITTING - Site Management/Operations	4.0	4.0	12.1	0.0	0.0	0.0
STUDIES/PERMITTING - Site Infrastructure	0.7	0.7	2.1	0.0	0.0	0.0
STUDIES/PERMITTING - National Laboratories	0.2	0.2	0.6	0.0	0.0	0.0
STUDIES/PERMITTING - Site Constructors	0.0	0.0	0.0	0.0	0.0	0.0
STUDIES/PERMITTING - Architecture/Engineering Contract	0.0	0.0	0.0	0.0	0.0	0.0
STUDIES/PERMITTING - Construction Contractor	0.0	0.0	0.0	0.0	0.0	0.0
DESIGN - Site Management/Operations	0.0	0.0	0.0	2.1	7.4	2.2
DESIGN - Site Infrastructure	0.0	0.0	0.0	0.4	1.3	0.4
DESIGN - National Laboratories	0.0	0.0	0.0	1.9	6.6	2.0
DESIGN - Site Constructors	0.0	0.0	0.0	1.3	4.4	1.3
DESIGN - Architecture/Engineering Contractors	0.0	0.0	0.0	14.6	51.0	15.3
DESIGN - Construction Contractor	0.0	0.0	0.0	0.0	0.0	0.0
CONSTRUCTION/D&D - Site Management/Operations	0.0	0.0	0.0	0.0	0.0	5.2
CONSTRUCTION/D&D - Site Infrastructure	0.0	0.0	0.0	0.0	0.0	0.9
CONSTRUCTION/D&D - National Laboratories	0.0	0.0	0.0	0.0	0.0	0.0
CONSTRUCTION/D&D - Site Constructors	0.0	0.0	0.0	0.0	0.0	3.1
CONSTRUCTION/D&D - Architecture/Engineering Contracto	0.0	0.0	0.0	0.0	0.0	2.4
CONSTRUCTION/D&D - Construction Contractor	0.0	0.0	0.0	0.0	0.0	50.4
OPERATIONS - Site Management/Operations	0.0	0.0	0.0	0.0	0.0	0.0
OPERATIONS - Site Infrastructure	0.0	0.0	0.0	0.0	0.0	0.0
OPERATIONS - National Laboratories	0.0	0.0	0.0	0.0	0.0	0.0
OPERATIONS - Site Constructors	0.0	0.0	0.0	0.0	0.0	0.0
OPERATIONS - Architecture/Engineering Contractors	0.0	0.0	0.0	0.0	0.0	0.0
OPERATIONS - Construction Contractor	0.0	0.0	0.0	0.0	0.0	0.0
Worker Category Reddick FTE (FTE)						
Engineer/Management	4.2	4.2	12.7	19.8	69.4	41.0
Crafts	0.0	0.0	0.0	0.0	0.0	41.0
Maintenance	0.0	0.0	0.0	0.0	0.0	0.0
Operators	0.0	0.0	0.0	0.0	0.0	0.0
Infrastructure	0.7	0.7	2.1	0.4	1.3	1.3
Total	4.9	4.9	14.8	20.2	70.7	83.2

ALTERNATIVE 1 HLWV COST SUMMARY	FY95	FY96	FY97	FY98	FY99	FY00
Studies/Permitting	6,812,047	8,395,852	8,228,623	281,052	0	0
Design	679,116	855,095	0	3,500,000	12,250,000	3,675,000
Construction/D&D	1,358,233	1,710,189	1,532,156	56,210	0	8,575,000
Operation	5,432,931	6,840,758	7,660,779	786,946	0	0
Total	14,282,327	17,801,894	17,421,558	4,624,209	12,250,000	12,250,000

ALTERNATIVE 1 HLWV FTE SUMMARY	FY95	FY96	FY97	FY98	FY99	FY00
Engineer/Management	52.3	64.8	59.5	22.4	69.4	41.0
Crafts	6.5	8.2	7.3	0.3	0.0	41.0
Maintenance	7.6	9.6	10.8	1.1	0.0	0.0
Operators	12.7	16.0	17.9	1.8	0.0	0.0
Infrastructure	9.0	11.1	11.7	1.1	1.3	1.3
Total	88.1	109.7	107.2	26.6	70.7	83.2

ALTERNATIVE 1 HLWV REDDICK COST BREAKDOWN	FY01	FY02	FY03	FY04	FY05
Activity % of Alternative 1 HLWV Reddick Costs (%)					
Studies/Permitting	0	0	0	0	0
Design	0	0	0	0	0
Construction/D&D	100	100	100	80	40
Operation	0	0	0	20	60
Total Percentage	100	100	100	100	100
Alternative 1 HLWV Reddick Costs($)					
Studies/Permitting	0	0	0	0	0
Design	0	0	0	0	0
Construction/D&D	12,250,000	36,750,000	34,500,000	28,520,000	23,400,000
Operation	0	0	0	7,130,000	35,100,000
Total Cost	12,250,000	36,750,000	34,500,000	35,650,000	58,500,000

ALTERNATIVE 1 HLWV REDDICK FTE BREAKDOWN	FY01	FY02	FY03	FY04	FY05
Contractor FTE per Alternative 1 HLWV Activity (FTE)					
STUDIES/PERMITTING - Site Management/Operations	0.0	0.0	0.0	0.0	0.0
STUDIES/PERMITTING - Site Infrastructure	0.0	0.0	0.0	0.0	0.0
STUDIES/PERMITTING - National Laboratories	0.0	0.0	0.0	0.0	0.0
STUDIES/PERMITTING - Site Constructors	0.0	0.0	0.0	0.0	0.0
STUDIES/PERMITTING - Architecture/Engineering Contract	0.0	0.0	0.0	0.0	0.0
STUDIES/PERMITTING - Construction Contractor	0.0	0.0	0.0	0.0	0.0
DESIGN - Site Management/Operations	0.0	0.0	0.0	0.0	0.0
DESIGN - Site Infrastructure	0.0	0.0	0.0	0.0	0.0
DESIGN - National Laboratories	0.0	0.0	0.0	0.0	0.0
DESIGN - Site Constructors	0.0	0.0	0.0	0.0	0.0
DESIGN - Architecture/Engineering Contractors	0.0	0.0	0.0	0.0	0.0
DESIGN - Construction Contractor	0.0	0.0	0.0	0.0	0.0
CONSTRUCTION/D&D - Site Management/Operations	7.4	22.3	20.9	17.3	14.2
CONSTRUCTION/D&D - Site Infrastructure	1.3	3.9	3.7	3.1	2.5
CONSTRUCTION/D&D - National Laboratories	0.0	0.0	0.0	0.0	0.0
CONSTRUCTION/D&D - Site Constructors	4.4	13.1	12.3	10.2	8.4
CONSTRUCTION/D&D - Architecture/Engineering Contracto	3.4	10.2	9.6	7.9	6.5
CONSTRUCTION/D&D - Construction Contractor	72.1	216.2	202.9	167.8	137.6
OPERATIONS - Site Management/Operations	0.0	0.0	0.0	30.3	149.2
OPERATIONS - Site Infrastructure	0.0	0.0	0.0	5.3	26.3
OPERATIONS - National Laboratories	0.0	0.0	0.0	3.8	18.8
OPERATIONS - Site Constructors	0.0	0.0	0.0	0.0	0.0
OPERATIONS - Architecture/Engineering Contractors	0.0	0.0	0.0	0.0	0.0
OPERATIONS - Construction Contractor	0.0	0.0	0.0	0.0	0.0
Worker Category Reddick FTE (FTE)					
Engineer/Management	28.8	86.3	81.0	73.8	88.5
Crafts	58.5	175.6	164.8	136.2	111.8
Maintenance	0.0	0.0	0.0	10.2	50.4
Operators	0.0	0.0	0.0	17.1	84.0
Infrastructure	1.3	3.9	3.7	8.4	28.8
Total	88.6	265.8	249.5	245.7	363.6

ALTERNATIVE 1 HLWV COST SUMMARY	FY01	FY02	FY03	FY04	FY05
Studies/Permitting	0	0	0	0	0
Design	0	0	0	0	0
Construction/D&D	12,250,000	36,750,000	34,500,000	28,520,000	23,400,000
Operation	0	0	0	7,987,272	51,382,120
Total	12,250,000	36,750,000	34,500,000	36,507,272	74,782,120

ALTERNATIVE 1 HLWV FTE SUMMARY	FY01	FY02	FY03	FY04	FY05
Engineer/Management	28.8	86.3	81.0	74.6	103.8
Crafts	58.5	175.6	164.8	136.2	111.8
Maintenance	0.0	0.0	0.0	11.4	73.3
Operators	0.0	0.0	0.0	19.1	122.1
Infrastructure	1.3	3.9	3.7	8.9	38.4
Total	88.6	265.8	249.5	250.2	449.4

ALTERNATIVE 1 HLWV REDDICK COST BREAKDOWN	FY06	FY07	FY08	FY09	FY10	FY11
Activity % of Alternative 1 HLWV Reddick Costs (%)						
Studies/Permitting	0	0	0	0	0	0
Design	0	0	0	0	0	0
Construction/D&D	0	0	0	0	0	0
Operation	100	100	100	100	100	0
Total Percentage	100	100	100	100	100	0
Alternative 1 HLWV Reddick Costs($)						
Studies/Permitting	0	0	0	0	0	0
Design	0	0	0	0	0	0
Construction/D&D	0	0	0	0	0	0
Operation	15,300,000	15,300,000	15,300,000	10,800,000	10,800,000	0
Total Cost	15,300,000	15,300,000	15,300,000	10,800,000	10,800,000	0

ALTERNATIVE 1 HLWV REDDICK FTE BREAKDOWN	FY06	FY07	FY08	FY09	FY10	FY11
Contractor FTE per Alternative 1 HLWV Activity (FTE)						
STUDIES/PERMITTING - Site Management/Operations	0.0	0.0	0.0	0.0	0.0	0.0
STUDIES/PERMITTING - Site Infrastructure	0.0	0.0	0.0	0.0	0.0	0.0
STUDIES/PERMITTING - National Laboratories	0.0	0.0	0.0	0.0	0.0	0.0
STUDIES/PERMITTING - Site Constructors	0.0	0.0	0.0	0.0	0.0	0.0
STUDIES/PERMITTING - Architecture/Engineering Contract	0.0	0.0	0.0	0.0	0.0	0.0
STUDIES/PERMITTING - Construction Contractor	0.0	0.0	0.0	0.0	0.0	0.0
DESIGN - Site Management/Operations	0.0	0.0	0.0	0.0	0.0	0.0
DESIGN - Site Infrastructure	0.0	0.0	0.0	0.0	0.0	0.0
DESIGN - National Laboratories	0.0	0.0	0.0	0.0	0.0	0.0
DESIGN - Site Constructors	0.0	0.0	0.0	0.0	0.0	0.0
DESIGN - Architecture/Engineering Contractors	0.0	0.0	0.0	0.0	0.0	0.0
DESIGN - Construction Contractor	0.0	0.0	0.0	0.0	0.0	0.0
CONSTRUCTION/D&D - Site Management/Operations	0.0	0.0	0.0	0.0	0.0	0.0
CONSTRUCTION/D&D - Site Infrastructure	0.0	0.0	0.0	0.0	0.0	0.0
CONSTRUCTION/D&D - National Laboratories	0.0	0.0	0.0	0.0	0.0	0.0
CONSTRUCTION/D&D - Site Constructors	0.0	0.0	0.0	0.0	0.0	0.0
CONSTRUCTION/D&D - Architecture/Engineering Contracto	0.0	0.0	0.0	0.0	0.0	0.0
CONSTRUCTION/D&D - Construction Contractor	0.0	0.0	0.0	0.0	0.0	0.0
OPERATIONS - Site Management/Operations	65.0	65.0	65.0	45.9	45.9	0.0
OPERATIONS - Site Infrastructure	11.5	11.5	11.5	8.1	8.1	0.0
OPERATIONS - National Laboratories	8.2	8.2	8.2	5.8	5.8	0.0
OPERATIONS - Site Constructors	0.0	0.0	0.0	0.0	0.0	0.0
OPERATIONS - Architecture/Engineering Contractors	0.0	0.0	0.0	0.0	0.0	0.0
OPERATIONS - Construction Contractor	0.0	0.0	0.0	0.0	0.0	0.0
Worker Category Reddick FTE (FTE)						
Engineer/Management	14.6	14.6	14.6	10.3	10.3	0.0
Crafts	0.0	0.0	0.0	0.0	0.0	0.0
Maintenance	22.0	22.0	22.0	15.5	15.5	0.0
Operators	36.6	36.6	36.6	25.8	25.8	0.0
Infrastructure	11.5	11.5	11.5	8.1	8.1	0.0
Total	84.7	84.7	84.7	59.8	59.8	0.0

ALTERNATIVE 1 HLWV COST SUMMARY	FY06	FY07	FY08	FY09	FY10	FY11
Studies/Permitting	0	0	0	0	0	0
Design	0	0	0	0	0	0
Construction/D&D	0	0	0	0	0	0
Operation	51,634,800	73,598,612	93,884,160	17,553,131	230,542,768	0
Total	51,634,800	73,598,612	93,884,160	17,553,131	230,542,768	0

ALTERNATIVE 1 HLWV FTE SUMMARY	FY06	FY07	FY08	FY09	FY10	FY11
Engineer/Management	48.7	69.2	88.2	16.7	216.1	0.0
Crafts	0.0	0.0	0.0	0.0	0.0	0.0
Maintenance	73.0	103.8	132.3	25.0	324.1	0.0
Operators	121.7	173.1	220.5	41.7	540.1	0.0
Infrastructure	32.9	45.8	57.8	12.1	137.6	0.0
Total	276.2	391.9	498.9	95.4	1,217.9	0.0

ALTERNATIVE 1 HLWV REDDICK COST BREAKDOWN	FY12	FY13	FY14	FY15	FY16	FY17	FY18	FY19
Activity % of Alternative 1 HLWV Reddick Costs (%)								
Studies/Permitting	0	0	0	0	0	0	0	0
Design	0	0	0	0	0	0	0	0
Construction/D&D	0	0	0	0	0	0	0	0
Operation	0	0	0	0	0	0	0	0
Total Percentage	0	0	0	0	0	0	0	0
Alternative 1 HLWV Reddick Costs($)								
Studies/Permitting	0	0	0	0	0	0	0	0
Design	0	0	0	0	0	0	0	0
Construction/D&D	0	0	0	0	0	0	0	0
Operation	0	0	0	0	0	0	0	0
Total Cost	0	0	0	0	0	0	0	0

ALTERNATIVE 1 HLWV REDDICK FTE BREAKDOWN	FY12	FY13	FY14	FY15	FY16	FY17	FY18	FY19
Contractor FTE per Alternative 1 HLWV Activity (FTE)								
STUDIES/PERMITTING - Site Management/Operations	0.0	0.0	0.0	0.0	0.0	0.0	0.0	0.0
STUDIES/PERMITTING - Site Infrastructure	0.0	0.0	0.0	0.0	0.0	0.0	0.0	0.0
STUDIES/PERMITTING - National Laboratories	0.0	0.0	0.0	0.0	0.0	0.0	0.0	0.0
STUDIES/PERMITTING - Site Constructors	0.0	0.0	0.0	0.0	0.0	0.0	0.0	0.0
STUDIES/PERMITTING - Architecture/Engineering Contract	0.0	0.0	0.0	0.0	0.0	0.0	0.0	0.0
STUDIES/PERMITTING - Construction Contractor	0.0	0.0	0.0	0.0	0.0	0.0	0.0	0.0
DESIGN - Site Management/Operations	0.0	0.0	0.0	0.0	0.0	0.0	0.0	0.0
DESIGN - Site Infrastructure	0.0	0.0	0.0	0.0	0.0	0.0	0.0	0.0
DESIGN - National Laboratories	0.0	0.0	0.0	0.0	0.0	0.0	0.0	0.0
DESIGN - Site Constructors	0.0	0.0	0.0	0.0	0.0	0.0	0.0	0.0
DESIGN - Architecture/Engineering Contractors	0.0	0.0	0.0	0.0	0.0	0.0	0.0	0.0
DESIGN - Construction Contractor	0.0	0.0	0.0	0.0	0.0	0.0	0.0	0.0
CONSTRUCTION/D&D - Site Management/Operations	0.0	0.0	0.0	0.0	0.0	0.0	0.0	0.0
CONSTRUCTION/D&D - Site Infrastructure	0.0	0.0	0.0	0.0	0.0	0.0	0.0	0.0
CONSTRUCTION/D&D - National Laboratories	0.0	0.0	0.0	0.0	0.0	0.0	0.0	0.0
CONSTRUCTION/D&D - Site Constructors	0.0	0.0	0.0	0.0	0.0	0.0	0.0	0.0
CONSTRUCTION/D&D - Architecture/Engineering Contracto	0.0	0.0	0.0	0.0	0.0	0.0	0.0	0.0
CONSTRUCTION/D&D - Construction Contractor	0.0	0.0	0.0	0.0	0.0	0.0	0.0	0.0
OPERATIONS - Site Management/Operations	0.0	0.0	0.0	0.0	0.0	0.0	0.0	0.0
OPERATIONS - Site Infrastructure	0.0	0.0	0.0	0.0	0.0	0.0	0.0	0.0
OPERATIONS - National Laboratories	0.0	0.0	0.0	0.0	0.0	0.0	0.0	0.0
OPERATIONS - Site Constructors	0.0	0.0	0.0	0.0	0.0	0.0	0.0	0.0
OPERATIONS - Architecture/Engineering Contractors	0.0	0.0	0.0	0.0	0.0	0.0	0.0	0.0
OPERATIONS - Construction Contractor	0.0	0.0	0.0	0.0	0.0	0.0	0.0	0.0
Worker Category Reddick FTE (FTE)								
Engineer/Management	0.0	0.0	0.0	0.0	0.0	0.0	0.0	0.0
Crafts	0.0	0.0	0.0	0.0	0.0	0.0	0.0	0.0
Maintenance	0.0	0.0	0.0	0.0	0.0	0.0	0.0	0.0
Operators	0.0	0.0	0.0	0.0	0.0	0.0	0.0	0.0
Infrastructure	0.0	0.0	0.0	0.0	0.0	0.0	0.0	0.0
Total	0.0	0.0	0.0	0.0	0.0	0.0	0.0	0.0

ALTERNATIVE 1 HLWV COST SUMMARY	FY12	FY13	FY14	FY15	FY16	FY17	FY18	FY19
Studies/Permitting	0	0	0	0	0	0	0	0
Design	0	0	0	0	0	0	0	0
Construction/D&D	0	0	0	0	0	0	0	0
Operation	0	0	0	0	0	0	0	0
Total	0	0	0	0	0	0	0	0

ALTERNATIVE 1 HLWV FTE SUMMARY	FY12	FY13	FY14	FY15	FY16	FY17	FY18	FY19
Engineer/Management	0.0	0.0	0.0	0.0	0.0	0.0	0.0	0.0
Crafts	0.0	0.0	0.0	0.0	0.0	0.0	0.0	0.0
Maintenance	0.0	0.0	0.0	0.0	0.0	0.0	0.0	0.0
Operators	0.0	0.0	0.0	0.0	0.0	0.0	0.0	0.0
Infrastructure	0.0	0.0	0.0	0.0	0.0	0.0	0.0	0.0
Total	0.0	0.0	0.0	0.0	0.0	0.0	0.0	0.0

ALTERNATIVE 1 HLWV REDDICK COST BREAKDOWN	FY20	FY21	FY22	FY23	FY24	FY25	FY26	FY27	FY28	FY29	FY30
Activity % of Alternative 1 HLWV Reddick Costs (%)											
Studies/Permitting	0	0	0	0	0	0	0	0	0	0	0
Design	0	0	0	0	0	0	0	0	0	0	0
Construction/D&D	0	0	0	0	0	0	0	0	0	0	0
Operation	0	0	0	0	0	0	0	0	0	0	0
Total Percentage	0	0	0	0	0	0	0	0	0	0	0
Alternative 1 HLWV Reddick Costs($)											
Studies/Permitting	0	0	0	0	0	0	0	0	0	0	0
Design	0	0	0	0	0	0	0	0	0	0	0
Construction/D&D	0	0	0	0	0	0	0	0	0	0	0
Operation	0	0	0	0	0	0	0	0	0	0	0
Total Cost	0	0	0	0	0	0	0	0	0	0	0

ALTERNATIVE 1 HLWV REDDICK FTE BREAKDOWN	FY20	FY21	FY22	FY23	FY24	FY25	FY26	FY27	FY28	FY29	FY30
Contractor FTE per Alternative 1 HLWV Activity (FTE)											
STUDIES/PERMITTING - Site Management/Operations	0.0	0.0	0.0	0.0	0.0	0.0	0.0	0.0	0.0	0.0	0.0
STUDIES/PERMITTING - Site Infrastructure	0.0	0.0	0.0	0.0	0.0	0.0	0.0	0.0	0.0	0.0	0.0
STUDIES/PERMITTING - National Laboratories	0.0	0.0	0.0	0.0	0.0	0.0	0.0	0.0	0.0	0.0	0.0
STUDIES/PERMITTING - Site Constructors	0.0	0.0	0.0	0.0	0.0	0.0	0.0	0.0	0.0	0.0	0.0
STUDIES/PERMITTING - Architecture/Engineering Contract	0.0	0.0	0.0	0.0	0.0	0.0	0.0	0.0	0.0	0.0	0.0
STUDIES/PERMITTING - Construction Contractor	0.0	0.0	0.0	0.0	0.0	0.0	0.0	0.0	0.0	0.0	0.0
DESIGN - Site Management/Operations	0.0	0.0	0.0	0.0	0.0	0.0	0.0	0.0	0.0	0.0	0.0
DESIGN - Site Infrastructure	0.0	0.0	0.0	0.0	0.0	0.0	0.0	0.0	0.0	0.0	0.0
DESIGN - National Laboratories	0.0	0.0	0.0	0.0	0.0	0.0	0.0	0.0	0.0	0.0	0.0
DESIGN - Site Constructors	0.0	0.0	0.0	0.0	0.0	0.0	0.0	0.0	0.0	0.0	0.0
DESIGN - Architecture/Engineering Contractors	0.0	0.0	0.0	0.0	0.0	0.0	0.0	0.0	0.0	0.0	0.0
DESIGN - Construction Contractor	0.0	0.0	0.0	0.0	0.0	0.0	0.0	0.0	0.0	0.0	0.0
CONSTRUCTION/D&D - Site Management/Operations	0.0	0.0	0.0	0.0	0.0	0.0	0.0	0.0	0.0	0.0	0.0
CONSTRUCTION/D&D - Site Infrastructure	0.0	0.0	0.0	0.0	0.0	0.0	0.0	0.0	0.0	0.0	0.0
CONSTRUCTION/D&D - National Laboratories	0.0	0.0	0.0	0.0	0.0	0.0	0.0	0.0	0.0	0.0	0.0
CONSTRUCTION/D&D - Site Constructors	0.0	0.0	0.0	0.0	0.0	0.0	0.0	0.0	0.0	0.0	0.0
CONSTRUCTION/D&D - Architecture/Engineering Contracto	0.0	0.0	0.0	0.0	0.0	0.0	0.0	0.0	0.0	0.0	0.0
CONSTRUCTION/D&D - Construction Contractor	0.0	0.0	0.0	0.0	0.0	0.0	0.0	0.0	0.0	0.0	0.0
OPERATIONS - Site Management/Operations	0.0	0.0	0.0	0.0	0.0	0.0	0.0	0.0	0.0	0.0	0.0
OPERATIONS - Site Infrastructure	0.0	0.0	0.0	0.0	0.0	0.0	0.0	0.0	0.0	0.0	0.0
OPERATIONS - National Laboratories	0.0	0.0	0.0	0.0	0.0	0.0	0.0	0.0	0.0	0.0	0.0
OPERATIONS - Site Constructors	0.0	0.0	0.0	0.0	0.0	0.0	0.0	0.0	0.0	0.0	0.0
OPERATIONS - Architecture/Engineering Contractors	0.0	0.0	0.0	0.0	0.0	0.0	0.0	0.0	0.0	0.0	0.0
OPERATIONS - Construction Contractor	0.0	0.0	0.0	0.0	0.0	0.0	0.0	0.0	0.0	0.0	0.0
Worker Category Reddick FTE (FTE)											
Engineer/Management	0.0	0.0	0.0	0.0	0.0	0.0	0.0	0.0	0.0	0.0	0.0
Crafts	0.0	0.0	0.0	0.0	0.0	0.0	0.0	0.0	0.0	0.0	0.0
Maintenance	0.0	0.0	0.0	0.0	0.0	0.0	0.0	0.0	0.0	0.0	0.0
Operators	0.0	0.0	0.0	0.0	0.0	0.0	0.0	0.0	0.0	0.0	0.0
Infrastructure	0.0	0.0	0.0	0.0	0.0	0.0	0.0	0.0	0.0	0.0	0.0
Total	0.0	0.0	0.0	0.0	0.0	0.0	0.0	0.0	0.0	0.0	0.0

ALTERNATIVE 1 HLWV COST SUMMARY	FY20	FY21	FY22	FY23	FY24	FY25	FY26	FY27	FY28	FY29	FY30
Studies/Permitting	0	0	0	0	0	0	0	0	0	0	0
Design	0	0	0	0	0	0	0	0	0	0	0
Construction/D&D	0	0	0	0	0	0	0	0	0	0	0
Operation	0	0	0	0	0	0	0	0	0	0	0
Total	0	0	0	0	0	0	0	0	0	0	0

ALTERNATIVE 1 HLWV FTE SUMMARY	FY20	FY21	FY22	FY23	FY24	FY25	FY26	FY27	FY28	FY29	FY30
Engineer/Management	0.0	0.0	0.0	0.0	0.0	0.0	0.0	0.0	0.0	0.0	0.0
Crafts	0.0	0.0	0.0	0.0	0.0	0.0	0.0	0.0	0.0	0.0	0.0
Maintenance	0.0	0.0	0.0	0.0	0.0	0.0	0.0	0.0	0.0	0.0	0.0
Operators	0.0	0.0	0.0	0.0	0.0	0.0	0.0	0.0	0.0	0.0	0.0
Infrastructure	0.0	0.0	0.0	0.0	0.0	0.0	0.0	0.0	0.0	0.0	0.0
Total	0.0	0.0	0.0	0.0	0.0	0.0	0.0	0.0	0.0	0.0	0.0

ALTERNATIVE 1 HLWV REDDICK COST BREAKDOWN	FY31	FY32	FY33	FY34	FY35	FY36	FY37	FY38	FY39	FY40
Activity % of Alternative 1 HLWV Reddick Costs (%)										
Studies/Permitting	0	0	0	0	0	0	0	0	0	0
Design	0	0	0	0	0	0	0	0	0	0
Construction/D&D	0	0	0	0	0	0	0	0	0	0
Operation	0	0	0	0	0	0	0	0	0	0
Total Percentage	0	0	0	0	0	0	0	0	0	0
Alternative 1 HLWV Reddick Costs($)										
Studies/Permitting	0	0	0	0	0	0	0	0	0	0
Design	0	0	0	0	0	0	0	0	0	0
Construction/D&D	0	0	0	0	0	0	0	0	0	0
Operation	0	0	0	0	0	0	0	0	0	0
Total Cost	0	0	0	0	0	0	0	0	0	0

ALTERNATIVE 1 HLWV REDDICK FTE BREAKDOWN	FY31	FY32	FY33	FY34	FY35	FY36	FY37	FY38	FY39	FY40
Contractor FTE per Alternative 1 HLWV Activity (FTE)										
STUDIES/PERMITTING - Site Management/Operations	0.0	0.0	0.0	0.0	0.0	0.0	0.0	0.0	0.0	0.0
STUDIES/PERMITTING - Site Infrastructure	0.0	0.0	0.0	0.0	0.0	0.0	0.0	0.0	0.0	0.0
STUDIES/PERMITTING - National Laboratories	0.0	0.0	0.0	0.0	0.0	0.0	0.0	0.0	0.0	0.0
STUDIES/PERMITTING - Site Constructors	0.0	0.0	0.0	0.0	0.0	0.0	0.0	0.0	0.0	0.0
STUDIES/PERMITTING - Architecture/Engineering Contract	0.0	0.0	0.0	0.0	0.0	0.0	0.0	0.0	0.0	0.0
STUDIES/PERMITTING - Construction Contractor	0.0	0.0	0.0	0.0	0.0	0.0	0.0	0.0	0.0	0.0
DESIGN - Site Management/Operations	0.0	0.0	0.0	0.0	0.0	0.0	0.0	0.0	0.0	0.0
DESIGN - Site Infrastructure	0.0	0.0	0.0	0.0	0.0	0.0	0.0	0.0	0.0	0.0
DESIGN - National Laboratories	0.0	0.0	0.0	0.0	0.0	0.0	0.0	0.0	0.0	0.0
DESIGN - Site Constructors	0.0	0.0	0.0	0.0	0.0	0.0	0.0	0.0	0.0	0.0
DESIGN - Architecture/Engineering Contractors	0.0	0.0	0.0	0.0	0.0	0.0	0.0	0.0	0.0	0.0
DESIGN - Construction Contractor	0.0	0.0	0.0	0.0	0.0	0.0	0.0	0.0	0.0	0.0
CONSTRUCTION/D&D - Site Management/Operations	0.0	0.0	0.0	0.0	0.0	0.0	0.0	0.0	0.0	0.0
CONSTRUCTION/D&D - Site Infrastructure	0.0	0.0	0.0	0.0	0.0	0.0	0.0	0.0	0.0	0.0
CONSTRUCTION/D&D - National Laboratories	0.0	0.0	0.0	0.0	0.0	0.0	0.0	0.0	0.0	0.0
CONSTRUCTION/D&D - Site Constructors	0.0	0.0	0.0	0.0	0.0	0.0	0.0	0.0	0.0	0.0
CONSTRUCTION/D&D - Architecture/Engineering Contracto	0.0	0.0	0.0	0.0	0.0	0.0	0.0	0.0	0.0	0.0
CONSTRUCTION/D&D - Construction Contractor	0.0	0.0	0.0	0.0	0.0	0.0	0.0	0.0	0.0	0.0
OPERATIONS - Site Management/Operations	0.0	0.0	0.0	0.0	0.0	0.0	0.0	0.0	0.0	0.0
OPERATIONS - Site Infrastructure	0.0	0.0	0.0	0.0	0.0	0.0	0.0	0.0	0.0	0.0
OPERATIONS - National Laboratories	0.0	0.0	0.0	0.0	0.0	0.0	0.0	0.0	0.0	0.0
OPERATIONS - Site Constructors	0.0	0.0	0.0	0.0	0.0	0.0	0.0	0.0	0.0	0.0
OPERATIONS - Architecture/Engineering Contractors	0.0	0.0	0.0	0.0	0.0	0.0	0.0	0.0	0.0	0.0
OPERATIONS - Construction Contractor	0.0	0.0	0.0	0.0	0.0	0.0	0.0	0.0	0.0	0.0
Worker Category Reddick FTE (FTE)										
Engineer/Management	0.0	0.0	0.0	0.0	0.0	0.0	0.0	0.0	0.0	0.0
Crafts	0.0	0.0	0.0	0.0	0.0	0.0	0.0	0.0	0.0	0.0
Maintenance	0.0	0.0	0.0	0.0	0.0	0.0	0.0	0.0	0.0	0.0
Operators	0.0	0.0	0.0	0.0	0.0	0.0	0.0	0.0	0.0	0.0
Infrastructure	0.0	0.0	0.0	0.0	0.0	0.0	0.0	0.0	0.0	0.0
Total	0.0	0.0	0.0	0.0	0.0	0.0	0.0	0.0	0.0	0.0

ALTERNATIVE 1 HLWV COST SUMMARY	FY31	FY32	FY33	FY34	FY35	FY36	FY37	FY38	FY39	FY40
Studies/Permitting	0	0	0	0	0	0	0	0	0	0
Design	0	0	0	0	0	0	0	0	0	0
Construction/D&D	0	0	0	0	0	0	0	0	0	0
Operation	0	0	0	0	0	0	0	0	0	0
Total	0	0	0	0	0	0	0	0	0	0

ALTERNATIVE 1 HLWV FTE SUMMARY	FY31	FY32	FY33	FY34	FY35	FY36	FY37	FY38	FY39	FY40
Engineer/Management	0.0	0.0	0.0	0.0	0.0	0.0	0.0	0.0	0.0	0.0
Crafts	0.0	0.0	0.0	0.0	0.0	0.0	0.0	0.0	0.0	0.0
Maintenance	0.0	0.0	0.0	0.0	0.0	0.0	0.0	0.0	0.0	0.0
Operators	0.0	0.0	0.0	0.0	0.0	0.0	0.0	0.0	0.0	0.0
Infrastructure	0.0	0.0	0.0	0.0	0.0	0.0	0.0	0.0	0.0	0.0
Total	0.0	0.0	0.0	0.0	0.0	0.0	0.0	0.0	0.0	0.0

ALTERNATIVE 1 HLWV REDDICK COST BREAKDOWN

Activity % of Alternative 1 HLWV Reddick Costs (%)	
Studies/Permitting	
Design	
Construction/D&D	
Operation	
Total Percentage	

Alternative 1 HLWV Reddick Costs($)	Totals
Studies/Permitting	3,500,000
Design	19,425,000
Construction/D&D	143,995,000
Operation	109,730,000
Total Cost	276,650,000

ALTERNATIVE 1 HLWV REDDICK FTE BREAKDOWN	Totals
Contractor FTE per Alternative 1 HLWV Activity (FTE)	
STUDIES/PERMITTING - Site Management/Operations	20.2
STUDIES/PERMITTING - Site Infrastructure	3.6
STUDIES/PERMITTING - National Laboratories	0.9
STUDIES/PERMITTING - Site Constructors	0.0
STUDIES/PERMITTING - Architecture/Engineering Contract	0.0
STUDIES/PERMITTING - Construction Contractor	0.0
DESIGN - Site Management/Operations	11.8
DESIGN - Site Infrastructure	2.1
DESIGN - National Laboratories	10.4
DESIGN - Site Constructors	6.9
DESIGN - Architecture/Engineering Contractors	80.9
DESIGN - Construction Contractor	0.0
CONSTRUCTION/D&D - Site Management/Operations	87.4
CONSTRUCTION/D&D - Site Infrastructure	15.4
CONSTRUCTION/D&D - National Laboratories	0.0
CONSTRUCTION/D&D - Site Constructors	51.4
CONSTRUCTION/D&D - Architecture/Engineering Contracto	40.0
CONSTRUCTION/D&D - Construction Contractor	847.0
OPERATIONS - Site Management/Operations	466.4
OPERATIONS - Site Infrastructure	82.3
OPERATIONS - National Laboratories	58.9
OPERATIONS - Site Constructors	0.0
OPERATIONS - Architecture/Engineering Contractors	0.0
OPERATIONS - Construction Contractor	0.0
Worker Category Reddick FTE (FTE)	
Engineer/Management	574.2
Crafts	687.9
Maintenance	157.6
Operators	262.6
Infrastructure	103.4
Total	1,785.7

ALTERNATIVE 1 HLWV COST SUMMARY	Totals
Studies/Permitting	23,717,575
Design	20,959,211
Construction/D&D	148,651,788
Operation	547,304,277
Total	740,632,851

ALTERNATIVE 1 HLWV FTE SUMMARY	Totals
Engineer/Management	1,122.5
Crafts	710.2
Maintenance	772.0
Operators	1,286.7
Infrastructure	377.9
Total	4,269.3

This page intentionally left blank.

APPENDIX B-4: ALTERNATIVE 2 COST AND FTE RESOURCES

FUNCTION - ALTERNATIVE 2 RETRIEVAL	FY01	FY02	FY03	FY04	FY05
Technology Development (Test) Cost	0	0	0	0	0
Retrieve SY-101, SY-103	457,321	0	0	0	0
Perform Arm-based SST WR Demo C-106	0	1,760,159	9,588,926	656,776	0
Project W-151	0	0	0	0	0
Project W-211	0	0	0	0	0
Perform sluicing WR Demo C-106	0	0	0	0	0
Project W-340	0	0	0	0	0
Subtotal Test Costs	457,321	1,760,159	9,588,926	656,776	0
Test Oversight Costs	45,732	176,016	958,893	65,678	0
Total Retrieval Base Costs	**503,053**	**1,936,175**	**10,547,819**	**722,454**	**0**
Total Alt 2 Reddick Costs	39,000,000	76,000,000	101,000,000	106,000,000	120,000,000
Retrieval % of Total Alt 2 Reddick Costs	4	4	4	4	4
Alt 2 Retrieval Reddick Costs	**1,560,000**	**3,040,000**	**4,040,000**	**4,240,000**	**4,800,000**
Alt 2 Retrieval Test Costs ($)	**2,063,053**	**4,976,175**	**14,587,819**	**4,962,454**	**4,800,000**

ALTERNATIVE 2 RETRIEVAL BASE COST BREAKDOWN	FY01	FY02	FY03	FY04	FY05
Activity % of Alt 2 Retrieval Base Costs (%)					
Studies/Permitting	20	30	10	10	0
Design	0	0	0	0	0
Construction/D&D	20	0	0	0	0
Operation	60	70	90	90	0
Total Percentage	**100**	**100**	**100**	**100**	**0**
Alt 2 Retrieval Activity Base Costs($)					
Studies/Permitting	100,611	580,852	1,054,782	72,245	0
Design	0	0	0	0	0
Construction/D&D	100,611	0	0	0	0
Operation	301,832	1,355,322	9,493,037	650,208	0
Total Cost	**503,053**	**1,936,175**	**10,547,819**	**722,454**	**0**

ALTERNATIVE 2 RETRIEVAL BASE FTE BREAKDOWN	FY01	FY02	FY03	FY04	FY05
Contractor Base FTE per Alt 2 Retrieval Activity (FTE)					
STUDIES/PERMITTING - Site Management/Operations	0.5	2.6	4.8	0.3	0.0
STUDIES/PERMITTING - Site Infrastructure	0.1	0.5	0.8	0.1	0.0
STUDIES/PERMITTING - National Laboratories	0.1	0.8	1.4	0.1	0.0
STUDIES/PERMITTING - Site Constructors	0.0	0.0	0.0	0.0	0.0
STUDIES/PERMITTING - Architecture/Engineering Contract	0.0	0.0	0.0	0.0	0.0
STUDIES/PERMITTING - Construction Contractor	0.0	0.0	0.0	0.0	0.0
DESIGN - Site Management/Operations	0.0	0.0	0.0	0.0	0.0
DESIGN - Site Infrastructure	0.0	0.0	0.0	0.0	0.0
DESIGN - National Laboratories	0.0	0.0	0.0	0.0	0.0
DESIGN - Site Constructors	0.0	0.0	0.0	0.0	0.0
DESIGN - Architecture/Engineering Contractors	0.0	0.0	0.0	0.0	0.0
DESIGN - Construction Contractor	0.0	0.0	0.0	0.0	0.0
CONSTRUCTION/D&D - Site Management/Operations	0.0	0.0	0.0	0.0	0.0
CONSTRUCTION/D&D - Site Infrastructure	0.0	0.0	0.0	0.0	0.0
CONSTRUCTION/D&D - National Laboratories	0.0	0.0	0.0	0.0	0.0
CONSTRUCTION/D&D - Site Constructors	0.0	0.0	0.0	0.0	0.0
CONSTRUCTION/D&D - Architecture/Engineering Contracto	0.0	0.0	0.0	0.0	0.0
CONSTRUCTION/D&D - Construction Contractor	0.6	0.0	0.0	0.0	0.0
OPERATIONS - Site Management/Operations	1.0	4.5	31.7	2.2	0.0
OPERATIONS - Site Infrastructure	0.2	0.8	5.6	0.4	0.0
OPERATIONS - National Laboratories	0.4	1.8	12.7	0.9	0.0
OPERATIONS - Site Constructors	0.0	0.0	0.0	0.0	0.0
OPERATIONS - Architecture/Engineering Contractors	0.0	0.0	0.0	0.0	0.0
OPERATIONS - Construction Contractor	0.0	0.0	0.0	0.0	0.0

Worker Category Base FTE (FTE)	FY01	FY02	FY03	FY04	FY05
Engineer/Management	1.1	4.7	15.1	1.0	0.0
Crafts	0.5	0.0	0.0	0.0	0.0
Maintenance	0.4	1.9	13.3	0.9	0.0
Operators	0.7	3.2	22.2	1.5	0.0
Infrastructure	0.3	1.3	6.4	0.4	0.0
Total	3.0	11.0	57.1	3.9	0.0

FUNCTION - ALTERNATIVE 2 RETRIEVAL	FY06	FY07	FY08	FY09	FY10
Technology Development (Test) Cost	0	0	0	0	0
Retrieve SY-101, SY-103	0	0	0	0	0
Perform Arm-based SST WR Demo C-106	0	0	0	0	0
Project W-151	0	0	0	0	0
Project W-211	0	0	0	0	0
Perform sluicing WR Demo C-106	0	0	0	0	0
Project W-340	0	0	0	0	0
Subtotal Test Costs	0	0	0	0	0
Test Oversight Costs	0	0	0	0	0
Total Retrieval Base Costs	0	0	0	0	0
Total Alt 2 Reddick Costs	80,000,000	95,000,000	95,000,000	85,000,000	85,000,000
Retrieval % of Total Alt 2 Reddick Costs	4	4	4	4	4
Alt 2 Retrieval Reddick Costs	3,200,000	3,800,000	3,800,000	3,400,000	3,400,000
Alt 2 Retrieval Test Costs ($)	3,200,000	3,800,000	3,800,000	3,400,000	3,400,000

ALTERNATIVE 2 RETRIEVAL BASE COST BREAKDOWN	FY06	FY07	FY08	FY09	FY10
Activity % of Alt 2 Retrieval Base Costs (%)					
Studies/Permitting	0	0	0	0	0
Design	0	0	0	0	0
Construction/D&D	0	0	0	0	0
Operation	0	0	0	0	0
Total Percentage	0	0	0	0	0
Alt 2 Retrieval Activity Base Costs($)					
Studies/Permitting	0	0	0	0	0
Design	0	0	0	0	0
Construction/D&D	0	0	0	0	0
Operation	0	0	0	0	0
Total Cost	0	0	0	0	0

ALTERNATIVE 2 RETRIEVAL BASE FTE BREAKDOWN	FY06	FY07	FY08	FY09	FY10
Contractor Base FTE per Alt 2 Retrieval Activity (FTE)					
STUDIES/PERMITTING - Site Management/Operations	0.0	0.0	0.0	0.0	0.0
STUDIES/PERMITTING - Site Infrastructure	0.0	0.0	0.0	0.0	0.0
STUDIES/PERMITTING - National Laboratories	0.0	0.0	0.0	0.0	0.0
STUDIES/PERMITTING - Site Constructors	0.0	0.0	0.0	0.0	0.0
STUDIES/PERMITTING - Architecture/Engineering Contract	0.0	0.0	0.0	0.0	0.0
STUDIES/PERMITTING - Construction Contractor	0.0	0.0	0.0	0.0	0.0
DESIGN - Site Management/Operations	0.0	0.0	0.0	0.0	0.0
DESIGN - Site Infrastructure	0.0	0.0	0.0	0.0	0.0
DESIGN - National Laboratories	0.0	0.0	0.0	0.0	0.0
DESIGN - Site Constructors	0.0	0.0	0.0	0.0	0.0
DESIGN - Architecture/Engineering Contractors	0.0	0.0	0.0	0.0	0.0
DESIGN - Construction Contractor	0.0	0.0	0.0	0.0	0.0
CONSTRUCTION/D&D - Site Management/Operations	0.0	0.0	0.0	0.0	0.0
CONSTRUCTION/D&D - Site Infrastructure	0.0	0.0	0.0	0.0	0.0
CONSTRUCTION/D&D - National Laboratories	0.0	0.0	0.0	0.0	0.0
CONSTRUCTION/D&D - Site Constructors	0.0	0.0	0.0	0.0	0.0
CONSTRUCTION/D&D - Architecture/Engineering Contracto	0.0	0.0	0.0	0.0	0.0
CONSTRUCTION/D&D - Construction Contractor	0.0	0.0	0.0	0.0	0.0
OPERATIONS - Site Management/Operations	0.0	0.0	0.0	0.0	0.0
OPERATIONS - Site Infrastructure	0.0	0.0	0.0	0.0	0.0
OPERATIONS - National Laboratories	0.0	0.0	0.0	0.0	0.0
OPERATIONS - Site Constructors	0.0	0.0	0.0	0.0	0.0
OPERATIONS - Architecture/Engineering Contractors	0.0	0.0	0.0	0.0	0.0
OPERATIONS - Construction Contractor	0.0	0.0	0.0	0.0	0.0

Worker Category Base FTE (FTE)	FY06	FY07	FY08	FY09	FY10
Engineer/Management	0.0	0.0	0.0	0.0	0.0
Crafts	0.0	0.0	0.0	0.0	0.0
Maintenance	0.0	0.0	0.0	0.0	0.0
Operators	0.0	0.0	0.0	0.0	0.0
Infrastructure	0.0	0.0	0.0	0.0	0.0
Total	0.0	0.0	0.0	0.0	0.0

FUNCTION - ALTERNATIVE 2 RETRIEVAL	FY11	FY12	FY13	FY14	FY15	FY16	FY17
Technology Development (Test) Cost	0	0	0	0	0	0	0
Retrieve SY-101, SY-103	0	0	0	0	0	0	0
Perform Arm-based SST WR Demo C-106	0	0	0	0	0	0	0
Project W-151	0	0	0	0	0	0	0
Project W-211	0	0	0	0	0	0	0
Perform sluicing WR Demo C-106	0	0	0	0	0	0	0
Project W-340	0	0	0	0	0	0	0
Subtotal Test Costs	0	0	0	0	0	0	0
Test Oversight Costs	0	0	0	0	0	0	0
Total Retrieval Base Costs	0	0	0	0	0	0	0
Total Alt 2 Reddick Costs							
Retrieval % of Total Alt 2 Reddick Costs							
Alt 2 Retrieval Reddick Costs	0	0	0	0	0	0	0
Alt 2 Retrieval Test Costs ($)	0	0	0	0	0	0	0

ALTERNATIVE 2 RETRIEVAL BASE COST BREAKDOWN	FY11	FY12	FY13	FY14	FY15	FY16	FY17
Activity % of Alt 2 Retrieval Base Costs (%)							
Studies/Permitting	0	0	0	0	0	0	0
Design	0	0	0	0	0	0	0
Construction/D&D	0	0	0	0	0	0	0
Operation	0	0	0	0	0	0	0
Total Percentage	0	0	0	0	0	0	0
Alt 2 Retrieval Activity Base Costs($)							
Studies/Permitting	0	0	0	0	0	0	0
Design	0	0	0	0	0	0	0
Construction/D&D	0	0	0	0	0	0	0
Operation	0	0	0	0	0	0	0
Total Cost	0	0	0	0	0	0	0

ALTERNATIVE 2 RETRIEVAL BASE FTE BREAKDOWN	FY11	FY12	FY13	FY14	FY15	FY16	FY17
Contractor Base FTE per Alt 2 Retrieval Activity (FTE)							
STUDIES/PERMITTING - Site Management/Operations	0.0	0.0	0.0	0.0	0.0	0.0	0.0
STUDIES/PERMITTING - Site Infrastructure	0.0	0.0	0.0	0.0	0.0	0.0	0.0
STUDIES/PERMITTING - National Laboratories	0.0	0.0	0.0	0.0	0.0	0.0	0.0
STUDIES/PERMITTING - Site Constructors	0.0	0.0	0.0	0.0	0.0	0.0	0.0
STUDIES/PERMITTING - Architecture/Engineering Contract	0.0	0.0	0.0	0.0	0.0	0.0	0.0
STUDIES/PERMITTING - Construction Contractor	0.0	0.0	0.0	0.0	0.0	0.0	0.0
DESIGN - Site Management/Operations	0.0	0.0	0.0	0.0	0.0	0.0	0.0
DESIGN - Site Infrastructure	0.0	0.0	0.0	0.0	0.0	0.0	0.0
DESIGN - National Laboratories	0.0	0.0	0.0	0.0	0.0	0.0	0.0
DESIGN - Site Constructors	0.0	0.0	0.0	0.0	0.0	0.0	0.0
DESIGN - Architecture/Engineering Contractors	0.0	0.0	0.0	0.0	0.0	0.0	0.0
DESIGN - Construction Contractor	0.0	0.0	0.0	0.0	0.0	0.0	0.0
CONSTRUCTION/D&D - Site Management/Operations	0.0	0.0	0.0	0.0	0.0	0.0	0.0
CONSTRUCTION/D&D - Site Infrastructure	0.0	0.0	0.0	0.0	0.0	0.0	0.0
CONSTRUCTION/D&D - National Laboratories	0.0	0.0	0.0	0.0	0.0	0.0	0.0
CONSTRUCTION/D&D - Site Constructors	0.0	0.0	0.0	0.0	0.0	0.0	0.0
CONSTRUCTION/D&D - Architecture/Engineering Contracto	0.0	0.0	0.0	0.0	0.0	0.0	0.0
CONSTRUCTION/D&D - Construction Contractor	0.0	0.0	0.0	0.0	0.0	0.0	0.0
OPERATIONS - Site Management/Operations	0.0	0.0	0.0	0.0	0.0	0.0	0.0
OPERATIONS - Site Infrastructure	0.0	0.0	0.0	0.0	0.0	0.0	0.0
OPERATIONS - National Laboratories	0.0	0.0	0.0	0.0	0.0	0.0	0.0
OPERATIONS - Site Constructors	0.0	0.0	0.0	0.0	0.0	0.0	0.0
OPERATIONS - Architecture/Engineering Contractors	0.0	0.0	0.0	0.0	0.0	0.0	0.0
OPERATIONS - Construction Contractor	0.0	0.0	0.0	0.0	0.0	0.0	0.0

Worker Category Base FTE (FTE)	FY11	FY12	FY13	FY14	FY15	FY16	FY17
Engineer/Management	0.0	0.0	0.0	0.0	0.0	0.0	0.0
Crafts	0.0	0.0	0.0	0.0	0.0	0.0	0.0
Maintenance	0.0	0.0	0.0	0.0	0.0	0.0	0.0
Operators	0.0	0.0	0.0	0.0	0.0	0.0	0.0
Infrastructure	0.0	0.0	0.0	0.0	0.0	0.0	0.0
Total	0.0	0.0	0.0	0.0	0.0	0.0	0.0

FUNCTION - ALTERNATIVE 2 RETRIEVAL	FY18	FY19	FY20	FY21	FY22	FY23	FY24	FY25	FY26	FY27	FY28	FY29
Technology Development (Test) Cost	0	0	0	0	0	0	0	0	0	0	0	0
Retrieve SY-101, SY-103	0	0	0	0	0	0	0	0	0	0	0	0
Perform Arm-based SST WR Demo C-106	0	0	0	0	0	0	0	0	0	0	0	0
Project W-151	0	0	0	0	0	0	0	0	0	0	0	0
Project W-211	0	0	0	0	0	0	0	0	0	0	0	0
Perform sluicing WR Demo C-106	0	0	0	0	0	0	0	0	0	0	0	0
Project W-340	0	0	0	0	0	0	0	0	0	0	0	0
Subtotal Test Costs	0	0	0	0	0	0	0	0	0	0	0	0
Test Oversight Costs	0	0	0	0	0	0	0	0	0	0	0	0
Total Retrieval Base Costs	0	0	0	0	0	0	0	0	0	0	0	0
Total Alt 2 Reddick Costs												
Retrieval % of Total Alt 2 Reddick Costs												
Alt 2 Retrieval Reddick Costs	0	0	0	0	0	0	0	0	0	0	0	0
Alt 2 Retrieval Test Costs ($)	0	0	0	0	0	0	0	0	0	0	0	0

ALTERNATIVE 2 RETRIEVAL BASE COST BREAKDOWN	FY18	FY19	FY20	FY21	FY22	FY23	FY24	FY25	FY26	FY27	FY28	FY29
Activity % of Alt 2 Retrieval Base Costs (%)												
Studies/Permitting	0	0	0	0	0	0	0	0	0	0	0	0
Design	0	0	0	0	0	0	0	0	0	0	0	0
Construction/D&D	0	0	0	0	0	0	0	0	0	0	0	0
Operation	0	0	0	0	0	0	0	0	0	0	0	0
Total Percentage	0	0	0	0	0	0	0	0	0	0	0	0
Alt 2 Retrieval Activity Base Costs($)												
Studies/Permitting	0	0	0	0	0	0	0	0	0	0	0	0
Design	0	0	0	0	0	0	0	0	0	0	0	0
Construction/D&D	0	0	0	0	0	0	0	0	0	0	0	0
Operation	0	0	0	0	0	0	0	0	0	0	0	0
Total Cost	0	0	0	0	0	0	0	0	0	0	0	0

ALTERNATIVE 2 RETRIEVAL BASE FTE BREAKDOWN	FY18	FY19	FY20	FY21	FY22	FY23	FY24	FY25	FY26	FY27	FY28	FY29
Contractor Base FTE per Alt 2 Retrieval Activity (FTE)												
STUDIES/PERMITTING - Site Management/Operations	0.0	0.0	0.0	0.0	0.0	0.0	0.0	0.0	0.0	0.0	0.0	0.0
STUDIES/PERMITTING - Site Infrastructure	0.0	0.0	0.0	0.0	0.0	0.0	0.0	0.0	0.0	0.0	0.0	0.0
STUDIES/PERMITTING - National Laboratories	0.0	0.0	0.0	0.0	0.0	0.0	0.0	0.0	0.0	0.0	0.0	0.0
STUDIES/PERMITTING - Site Constructors	0.0	0.0	0.0	0.0	0.0	0.0	0.0	0.0	0.0	0.0	0.0	0.0
STUDIES/PERMITTING - Architecture/Engineering Contract	0.0	0.0	0.0	0.0	0.0	0.0	0.0	0.0	0.0	0.0	0.0	0.0
STUDIES/PERMITTING - Construction Contractor	0.0	0.0	0.0	0.0	0.0	0.0	0.0	0.0	0.0	0.0	0.0	0.0
DESIGN - Site Management/Operations	0.0	0.0	0.0	0.0	0.0	0.0	0.0	0.0	0.0	0.0	0.0	0.0
DESIGN - Site Infrastructure	0.0	0.0	0.0	0.0	0.0	0.0	0.0	0.0	0.0	0.0	0.0	0.0
DESIGN - National Laboratories	0.0	0.0	0.0	0.0	0.0	0.0	0.0	0.0	0.0	0.0	0.0	0.0
DESIGN - Site Constructors	0.0	0.0	0.0	0.0	0.0	0.0	0.0	0.0	0.0	0.0	0.0	0.0
DESIGN - Architecture/Engineering Contractors	0.0	0.0	0.0	0.0	0.0	0.0	0.0	0.0	0.0	0.0	0.0	0.0
DESIGN - Construction Contractor	0.0	0.0	0.0	0.0	0.0	0.0	0.0	0.0	0.0	0.0	0.0	0.0
CONSTRUCTION/D&D - Site Management/Operations	0.0	0.0	0.0	0.0	0.0	0.0	0.0	0.0	0.0	0.0	0.0	0.0
CONSTRUCTION/D&D - Site Infrastructure	0.0	0.0	0.0	0.0	0.0	0.0	0.0	0.0	0.0	0.0	0.0	0.0
CONSTRUCTION/D&D - National Laboratories	0.0	0.0	0.0	0.0	0.0	0.0	0.0	0.0	0.0	0.0	0.0	0.0
CONSTRUCTION/D&D - Site Constructors	0.0	0.0	0.0	0.0	0.0	0.0	0.0	0.0	0.0	0.0	0.0	0.0
CONSTRUCTION/D&D - Architecture/Engineering Contracto	0.0	0.0	0.0	0.0	0.0	0.0	0.0	0.0	0.0	0.0	0.0	0.0
CONSTRUCTION/D&D - Construction Contractor	0.0	0.0	0.0	0.0	0.0	0.0	0.0	0.0	0.0	0.0	0.0	0.0
OPERATIONS - Site Management/Operations	0.0	0.0	0.0	0.0	0.0	0.0	0.0	0.0	0.0	0.0	0.0	0.0
OPERATIONS - Site Infrastructure	0.0	0.0	0.0	0.0	0.0	0.0	0.0	0.0	0.0	0.0	0.0	0.0
OPERATIONS - National Laboratories	0.0	0.0	0.0	0.0	0.0	0.0	0.0	0.0	0.0	0.0	0.0	0.0
OPERATIONS - Site Constructors	0.0	0.0	0.0	0.0	0.0	0.0	0.0	0.0	0.0	0.0	0.0	0.0
OPERATIONS - Architecture/Engineering Contractors	0.0	0.0	0.0	0.0	0.0	0.0	0.0	0.0	0.0	0.0	0.0	0.0
OPERATIONS - Construction Contractor	0.0	0.0	0.0	0.0	0.0	0.0	0.0	0.0	0.0	0.0	0.0	0.0

Worker Category Base FTE (FTE)	FY18	FY19	FY20	FY21	FY22	FY23	FY24	FY25	FY26	FY27	FY28	FY29
Engineer/Management	0.0	0.0	0.0	0.0	0.0	0.0	0.0	0.0	0.0	0.0	0.0	0.0
Crafts	0.0	0.0	0.0	0.0	0.0	0.0	0.0	0.0	0.0	0.0	0.0	0.0
Maintenance	0.0	0.0	0.0	0.0	0.0	0.0	0.0	0.0	0.0	0.0	0.0	0.0
Operators	0.0	0.0	0.0	0.0	0.0	0.0	0.0	0.0	0.0	0.0	0.0	0.0
Infrastructure	0.0	0.0	0.0	0.0	0.0	0.0	0.0	0.0	0.0	0.0	0.0	0.0
Total	0.0	0.0	0.0	0.0	0.0	0.0	0.0	0.0	0.0	0.0	0.0	0.0

FUNCTION - ALTERNATIVE 2 RETRIEVAL	FY30	FY31	FY32	FY33	FY34	FY35	FY36	FY37	FY38	FY39	FY40
Technology Development (Test) Cost	0	0	0	0	0	0	0	0	0	0	0
Retrieve SY-101, SY-103	0	0	0	0	0	0	0.	0	0	0	0
Perform Arm-based SST WR Demo C-106	0	0	0	0	0	0	0	0	0	0	0
Project W-151	0	0	0	0	0	0	0	0	0	0	0
Project W-211	0	0	0	0	0	0	0	0	0	0	0
Perform sluicing WR Demo C-106	0	0	0	0	0	0	0	0	0	0	0
Project W-340	0	0	0	0	0	0	0	0	0	0	0
Subtotal Test Costs	0	0	0	0	0	0	0	0	0	0	0
Test Oversight Costs	0	0	0	0	0	0	0	0	0	0	0
Total Retrieval Base Costs	0	0	0	0	0	0	0	0	0	0	0
Total Alt 2 Reddick Costs											
Retrieval % of Total Alt 2 Reddick Costs											
Alt 2 Retrieval Reddick Costs	0	0	0	0	0	0	0	0	0	0	0
Alt 2 Retrieval Test Costs ($)	0	0	0	0	0	0	0	0	0	0	0

ALTERNATIVE 2 RETRIEVAL BASE COST BREAKDOWN	FY30	FY31	FY32	FY33	FY34	FY35	FY36	FY37	FY38	FY39	FY40
Activity % of Alt 2 Retrieval Base Costs (%)											
Studies/Permitting	0	0	0	0	0	0	0	0	0	0	0
Design	0	0	0	0	0	0	0	0	0	0	0
Construction/D&D	0	0	0	0	0	0	0	0	0	0	0
Operation	0	0	0	0	0	0	0	0	0	0	0
Total Percentage	0	0	0	0	0	0	0	0	0	0	0
Alt 2 Retrieval Activity Base Costs($)											
Studies/Permitting	0	0	0	0	0	0	0	0	0	0	0
Design	0	0	0	0	0	0	0	0	0	0	0
Construction/D&D	0	0	0	0	0	0	0	0	0	0	0
Operation	0	0	0	0	0	0	0	0	0	0	0
Total Cost	0	0	0	0	0	0	0	0	0	0	0

ALTERNATIVE 2 RETRIEVAL BASE FTE BREAKDOWN	FY30	FY31	FY32	FY33	FY34	FY35	FY36	FY37	FY38	FY39	FY40
Contractor Base FTE per Alt 2 Retrieval Activity (FTE)											
STUDIES/PERMITTING - Site Management/Operations	0.0	0.0	0.0	0.0	0.0	0.0	0.0	0.0	0.0	0.0	0.0
STUDIES/PERMITTING - Site Infrastructure	0.0	0.0	0.0	0.0	0.0	0.0	0.0	0.0	0.0	0.0	0.0
STUDIES/PERMITTING - National Laboratories	0.0	0.0	0.0	0.0	0.0	0.0	0.0	0.0	0.0	0.0	0.0
STUDIES/PERMITTING - Site Constructors	0.0	0.0	0.0	0.0	0.0	0.0	0.0	0.0	0.0	0.0	0.0
STUDIES/PERMITTING - Architecture/Engineering Contract	0.0	0.0	0.0	0.0	0.0	0.0	0.0	0.0	0.0	0.0	0.0
STUDIES/PERMITTING - Construction Contractor	0.0	0.0	0.0	0.0	0.0	0.0	0.0	0.0	0.0	0.0	0.0
DESIGN - Site Management/Operations	0.0	0.0	0.0	0.0	0.0	0.0	0.0	0.0	0.0	0.0	0.0
DESIGN - Site Infrastructure	0.0	0.0	0.0	0.0	0.0	0.0	0.0	0.0	0.0	0.0	0.0
DESIGN - National Laboratories	0.0	0.0	0.0	0.0	0.0	0.0	0.0	0.0	0.0	0.0	0.0
DESIGN - Site Constructors	0.0	0.0	0.0	0.0	0.0	0.0	0.0	0.0	0.0	0.0	0.0
DESIGN - Architecture/Engineering Contractors	0.0	0.0	0.0	0.0	0.0	0.0	0.0	0.0	0.0	0.0	0.0
DESIGN - Construction Contractor	0.0	0.0	0.0	0.0	0.0	0.0	0.0	0.0	0.0	0.0	0.0
CONSTRUCTION/D&D - Site Management/Operations	0.0	0.0	0.0	0.0	0.0	0.0	0.0	0.0	0.0	0.0	0.0
CONSTRUCTION/D&D - Site Infrastructure	0.0	0.0	0.0	0.0	0.0	0.0	0.0	0.0	0.0	0.0	0.0
CONSTRUCTION/D&D - National Laboratories	0.0	0.0	0.0	0.0	0.0	0.0	0.0	0.0	0.0	0.0	0.0
CONSTRUCTION/D&D - Site Constructors	0.0	0.0	0.0	0.0	0.0	0.0	0.0	0.0	0.0	0.0	0.0
CONSTRUCTION/D&D - Architecture/Engineering Contracto	0.0	0.0	0.0	0.0	0.0	0.0	0.0	0.0	0.0	0.0	0.0
CONSTRUCTION/D&D - Construction Contractor	0.0	0.0	0.0	0.0	0.0	0.0	0.0	0.0	0.0	0.0	0.0
OPERATIONS - Site Management/Operations	0.0	0.0	0.0	0.0	0.0	0.0	0.0	0.0	0.0	0.0	0.0
OPERATIONS - Site Infrastructure	0.0	0.0	0.0	0.0	0.0	0.0	0.0	0.0	0.0	0.0	0.0
OPERATIONS - National Laboratories	0.0	0.0	0.0	0.0	0.0	0.0	0.0	0.0	0.0	0.0	0.0
OPERATIONS - Site Constructors	0.0	0.0	0.0	0.0	0.0	0.0	0.0	0.0	0.0	0.0	0.0
OPERATIONS - Architecture/Engineering Contractors	0.0	0.0	0.0	0.0	0.0	0.0	0.0	0.0	0.0	0.0	0.0
OPERATIONS - Construction Contractor	0.0	0.0	0.0	0.0	0.0	0.0	0.0	0.0	0.0	0.0	0.0

Worker Category Base FTE (FTE)	FY30	FY31	FY32	FY33	FY34	FY35	FY36	FY37	FY38	FY39	FY40
Engineer/Management	0.0	0.0	0.0	0.0	0.0	0.0	0.0	0.0	0.0	0.0	0.0
Crafts	0.0	0.0	0.0	0.0	0.0	0.0	0.0	0.0	0.0	0.0	0.0
Maintenance	0.0	0.0	0.0	0.0	0.0	0.0	0.0	0.0	0.0	0.0	0.0
Operators	0.0	0.0	0.0	0.0	0.0	0.0	0.0	0.0	0.0	0.0	0.0
Infrastructure	0.0	0.0	0.0	0.0	0.0	0.0	0.0	0.0	0.0	0.0	0.0
Total	0.0	0.0	0.0	0.0	0.0	0.0	0.0	0.0	0.0	0.0	0.0

FUNCTION - ALTERNATIVE 2 RETRIEVAL

	Totals
Technology Development (Test) Cost	42,515,879
Retrieve SY-101, SY-103	2,551,921
Perform Arm-based SST WR Demo C-106	12,005,861
Project W-151	14,076,773
Project W-211	54,507,001
Perform sluicing WR Demo C-106	9,652,350
Project W-340	12,608,924
Subtotal Test Costs	147,918,709
Test Oversight Costs	14,791,871
Total Retrieval Base Costs	162,710,580
Total Alt 2 Reddick Costs	978,000,000
Retrieval % of Total Alt 2 Reddick Costs	64
Alt 2 Retrieval Reddick Costs	39,120,000
Alt 2 Retrieval Test Costs ($)	201,830,580

ALTERNATIVE 2 RETRIEVAL BASE COST BREAKDOWN

Activity % of Alt 2 Retrieval Base Costs (%)	
Studies/Permitting	
Design	
Construction/D&D	
Operation	
Total Percentage	

Alt 2 Retrieval Activity Base Costs($)	Totals
Studies/Permitting	64,826,682
Design	27,450,875
Construction/D&D	27,451,577
Operation	42,981,446
Total Cost	162,710,580

ALTERNATIVE 2 RETRIEVAL BASE FTE BREAKDOWN

Contractor Base FTE per Alt 2 Retrieval Activity (FTE)	Totals
STUDIES/PERMITTING - Site Management/Operations	295.2
STUDIES/PERMITTING - Site Infrastructure	52.1
STUDIES/PERMITTING - National Laboratories	87.0
STUDIES/PERMITTING - Site Constructors	0.0
STUDIES/PERMITTING - Architecture/Engineering Contract	0.0
STUDIES/PERMITTING - Construction Contractor	0.0
DESIGN - Site Management/Operations	16.7
DESIGN - Site Infrastructure	2.9
DESIGN - National Laboratories	14.7
DESIGN - Site Constructors	9.8
DESIGN - Architecture/Engineering Contractors	114.4
DESIGN - Construction Contractor	0.0
CONSTRUCTION/D&D - Site Management/Operations	8.3
CONSTRUCTION/D&D - Site Infrastructure	1.5
CONSTRUCTION/D&D - National Laboratories	7.4
CONSTRUCTION/D&D - Site Constructors	9.8
CONSTRUCTION/D&D - Architecture/Engineering Contracto	7.6
CONSTRUCTION/D&D - Construction Contractor	161.5
OPERATIONS - Site Management/Operations	143.5
OPERATIONS - Site Infrastructure	25.3
OPERATIONS - National Laboratories	57.7
OPERATIONS - Site Constructors	0.0
OPERATIONS - Architecture/Engineering Contractors	0.0
OPERATIONS - Construction Contractor	0.0

Worker Category Base FTE (FTE)	Totals
Engineer/Management	641.4
Crafts	131.1
Maintenance	60.4
Operators	100.6
Infrastructure	81.8
Total	1,015.4

ALTERNATIVE 2 RETRIEVAL REDDICK COST BREAKDOWN	FY95	FY96	FY97	FY98	FY99	FY00
Activity % of Alt 2 Retrieval Reddick Costs (%)						
Studies/Permitting	100	100	100	0	0	0
Design	0	0	0	100	100	100
Construction/D&D	0	0	0	0	0	0
Operation	0	0	0	0	0	0
Total Percentage	100	100	100	100	100	100
Alt 2 Retrieval Activity Reddick Costs($)						
Studies/Permitting	80,000	80,000	240,000	0	0	0
Design	0	0	0	400,000	1,520,000	1,520,000
Construction/D&D	0	0	0	0	0	0
Operation	0	0	0	0	0	0
Total Cost	80,000	80,000	240,000	400,000	1,520,000	1,520,000

ALTERNATIVE 2 RETRIEVAL REDDICK FTE BREAKDOWN	FY95	FY96	FY97	FY98	FY99	FY00
Contractor Reddick FTE per Alt 2 Retrieval Activity (FTE)						
STUDIES/PERMITTING - Site Management/Operations	0.5	0.5	1.4	0.0	0.0	0.0
STUDIES/PERMITTING - Site Infrastructure	0.1	0.1	0.2	0.0	0.0	0.0
STUDIES/PERMITTING - National Laboratories	0.0	0.0	0.1	0.0	0.0	0.0
STUDIES/PERMITTING - Site Constructors	0.0	0.0	0.0	0.0	0.0	0.0
STUDIES/PERMITTING - Architecture/Engineering Contract	0.0	0.0	0.0	0.0	0.0	0.0
STUDIES/PERMITTING - Construction Contractor	0.0	0.0	0.0	0.0	0.0	0.0
DESIGN - Site Management/Operations	0.0	0.0	0.0	0.2	0.9	0.9
DESIGN - Site Infrastructure	0.0	0.0	0.0	0.0	0.2	0.2
DESIGN - National Laboratories	0.0	0.0	0.0	0.2	0.8	0.8
DESIGN - Site Constructors	0.0	0.0	0.0	0.1	0.5	0.5
DESIGN - Architecture/Engineering Contractors	0.0	0.0	0.0	1.7	6.3	6.3
DESIGN - Construction Contractor	0.0	0.0	0.0	0.0	0.0	0.0
CONSTRUCTION/D&D - Site Management/Operations	0.0	0.0	0.0	0.0	0.0	0.0
CONSTRUCTION/D&D - Site Infrastructure	0.0	0.0	0.0	0.0	0.0	0.0
CONSTRUCTION/D&D - National Laboratories	0.0	0.0	0.0	0.0	0.0	0.0
CONSTRUCTION/D&D - Site Constructors	0.0	0.0	0.0	0.0	0.0	0.0
CONSTRUCTION/D&D - Architecture/Engineering Contracto	0.0	0.0	0.0	0.0	0.0	0.0
CONSTRUCTION/D&D - Construction Contractor	0.0	0.0	0.0	0.0	0.0	0.0
OPERATIONS - Site Management/Operations	0.0	0.0	0.0	0.0	0.0	0.0
OPERATIONS - Site Infrastructure	0.0	0.0	0.0	0.0	0.0	0.0
OPERATIONS - National Laboratories	0.0	0.0	0.0	0.0	0.0	0.0
OPERATIONS - Site Constructors	0.0	0.0	0.0	0.0	0.0	0.0
OPERATIONS - Architecture/Engineering Contractors	0.0	0.0	0.0	0.0	0.0	0.0
OPERATIONS - Construction Contractor	0.0	0.0	0.0	0.0	0.0	0.0
Worker Category Reddick FTE (FTE)						
Engineer/Management	0.5	0.5	1.4	2.3	8.6	8.6
Crafts	0.0	0.0	0.0	0.0	0.0	0.0
Maintenance	0.0	0.0	0.0	0.0	0.0	0.0
Operators	0.0	0.0	0.0	0.0	0.0	0.0
Infrastructure	0.1	0.1	0.2	0.0	0.2	0.2
Total	0.6	0.6	1.7	2.3	8.8	8.8

ALTERNATIVE 2 RETRIEVAL COST SUMMARY	FY95	FY96	FY97	FY98	FY99	FY00
Studies/Permitting	19,899,773	23,163,298	16,386,658	3,373,585	454,329	140,548
Design	3,803,595	10,259,244	8,073,329	5,460,377	1,974,329	1,520,000
Construction/D&D	5,405,393	5,129,622	8,073,329	6,747,169	1,362,988	632,464
Operation	7,207,190	12,824,055	8,073,329	1,686,792	757,216	632,464
Total	36,115,952	51,376,219	40,606,646	17,267,924	4,548,863	2,925,477

ALTERNATIVE 2 RETRIEVAL FTE SUMMARY	FY95	FY96	FY97	FY98	FY99	FY00
Engineer/Management	157.0	218.6	168.6	68.0	17.7	11.5
Crafts	25.8	24.5	38.6	32.2	6.5	3.0
Maintenance	10.1	18.0	11.3	2.4	1.1	0.9
Operators	16.9	30.0	18.9	3.9	1.8	1.5
Infrastructure	20.9	27.6	19.3	4.7	1.1	0.7
Total	230.7	318.7	256.7	111.2	28.2	17.6

ALTERNATIVE 2 RETRIEVAL REDDICK COST BREAKDOWN	FY01	FY02	FY03	FY04	FY05
Activity % of Alt 2 Retrieval Reddick Costs (%)					
Studies/Permitting	0	0	0	0	0
Design	0	0	0	0	0
Construction/D&D	100	100	100	0	0
Operation	0	0	0	100	100
Total Percentage	100	100	100	100	100
Alt 2 Retrieval Activity Reddick Costs($)					
Studies/Permitting	0	0	0	0	0
Design	0	0	0	0	0
Construction/D&D	1,560,000	3,040,000	4,040,000	0	0
Operation	0	0	0	4,240,000	4,800,000
Total Cost	1,560,000	3,040,000	4,040,000	4,240,000	4,800,000

ALTERNATIVE 2 RETRIEVAL REDDICK FTE BREAKDOWN	FY01	FY02	FY03	FY04	FY05
Contractor Reddick FTE per Alt 2 Retrieval Activity (FTE)					
STUDIES/PERMITTING - Site Management/Operations	0.0	0.0	0.0	0.0	0.0
STUDIES/PERMITTING - Site Infrastructure	0.0	0.0	0.0	0.0	0.0
STUDIES/PERMITTING - National Laboratories	0.0	0.0	0.0	0.0	0.0
STUDIES/PERMITTING - Site Constructors	0.0	0.0	0.0	0.0	0.0
STUDIES/PERMITTING - Architecture/Engineering Contract	0.0	0.0	0.0	0.0	0.0
STUDIES/PERMITTING - Construction Contractor	0.0	0.0	0.0	0.0	0.0
DESIGN - Site Management/Operations	0.0	0.0	0.0	0.0	0.0
DESIGN - Site Infrastructure	0.0	0.0	0.0	0.0	0.0
DESIGN - National Laboratories	0.0	0.0	0.0	0.0	0.0
DESIGN - Site Constructors	0.0	0.0	0.0	0.0	0.0
DESIGN - Architecture/Engineering Contractors	0.0	0.0	0.0	0.0	0.0
DESIGN - Construction Contractor	0.0	0.0	0.0	0.0	0.0
CONSTRUCTION/D&D - Site Management/Operations	0.9	1.8	2.5	0.0	0.0
CONSTRUCTION/D&D - Site Infrastructure	0.2	0.3	0.4	0.0	0.0
CONSTRUCTION/D&D - National Laboratories	0.0	0.0	0.0	0.0	0.0
CONSTRUCTION/D&D - Site Constructors	0.6	1.1	1.4	0.0	0.0
CONSTRUCTION/D&D - Architecture/Engineering Contracto	0.4	0.8	1.1	0.0	0.0
CONSTRUCTION/D&D - Construction Contractor	9.2	17.9	23.8	0.0	0.0
OPERATIONS - Site Management/Operations	0.0	0.0	0.0	18.0	20.4
OPERATIONS - Site Infrastructure	0.0	0.0	0.0	3.2	3.6
OPERATIONS - National Laboratories	0.0	0.0	0.0	2.3	2.6
OPERATIONS - Site Constructors	0.0	0.0	0.0	0.0	0.0
OPERATIONS - Architecture/Engineering Contractors	0.0	0.0	0.0	0.0	0.0
OPERATIONS - Construction Contractor	0.0	0.0	0.0	0.0	0.0
Worker Category Reddick FTE (FTE)					
Engineer/Management	3.7	7.1	9.5	4.1	4.6
Crafts	7.5	14.5	19.3	0.0	0.0
Maintenance	0.0	0.0	0.0	6.1	6.9
Operators	0.0	0.0	0.0	10.1	11.5
Infrastructure	0.2	0.3	0.4	3.2	3.6
Total	11.3	22.0	29.2	23.5	26.6

ALTERNATIVE 2 RETRIEVAL COST SUMMARY	FY01	FY02	FY03	FY04	FY05
Studies/Permitting	100,611	580,852	1,054,782	72,245	0
Design	0	0	0	0	0
Construction/D&D	1,660,611	3,040,000	4,040,000	0	0
Operation	301,832	1,355,322	9,493,037	4,890,208	4,800,000
Total	2,063,053	4,976,175	14,587,819	4,962,454	4,800,000

ALTERNATIVE 2 RETRIEVAL FTE SUMMARY	FY01	FY02	FY03	FY04	FY05
Engineer/Management	4.8	11.8	24.6	5.1	4.6
Crafts	7.9	14.5	19.3	0.0	0.0
Maintenance	0.4	1.9	13.3	7.0	6.9
Operators	0.7	3.2	22.2	11.7	11.5
Infrastructure	0.4	1.6	6.9	3.6	3.6
Total	14.3	33.0	86.3	27.4	26.6

ALTERNATIVE 2 RETRIEVAL REDDICK COST BREAKDOWN	FY06	FY07	FY08	FY09	FY10
Activity % of Alt 2 Retrieval Reddick Costs (%)					
Studies/Permitting	0	0	0	0	0
Design	0	0	0	0	0
Construction/D&D	0	0	0	0	0
Operation	100	100	100	100	100
Total Percentage	100	100	100	100	100
Alt 2 Retrieval Activity Reddick Costs($)					
Studies/Permitting	0	0	0	0	0
Design	0	0	0	0	0
Construction/D&D	0	0	0	0	0
Operation	3,200,000	3,800,000	3,800,000	3,400,000	3,400,000
Total Cost	3,200,000	3,800,000	3,800,000	3,400,000	3,400,000

ALTERNATIVE 2 RETRIEVAL REDDICK FTE BREAKDOWN	FY06	FY07	FY08	FY09	FY10
Contractor Reddick FTE per Alt 2 Retrieval Activity (FTE)					
STUDIES/PERMITTING - Site Management/Operations	0.0	0.0	0.0	0.0	0.0
STUDIES/PERMITTING - Site Infrastructure	0.0	0.0	0.0	0.0	0.0
STUDIES/PERMITTING - National Laboratories	0.0	0.0	0.0	0.0	0.0
STUDIES/PERMITTING - Site Constructors	0.0	0.0	0.0	0.0	0.0
STUDIES/PERMITTING - Architecture/Engineering Contract	0.0	0.0	0.0	0.0	0.0
STUDIES/PERMITTING - Construction Contractor	0.0	0.0	0.0	0.0	0.0
DESIGN - Site Management/Operations	0.0	0.0	0.0	0.0	0.0
DESIGN - Site Infrastructure	0.0	0.0	0.0	0.0	0.0
DESIGN - National Laboratories	0.0	0.0	0.0	0.0	0.0
DESIGN - Site Constructors	0.0	0.0	0.0	0.0	0.0
DESIGN - Architecture/Engineering Contractors	0.0	0.0	0.0	0.0	0.0
DESIGN - Construction Contractor	0.0	0.0	0.0	0.0	0.0
CONSTRUCTION/D&D - Site Management/Operations	0.0	0.0	0.0	0.0	0.0
CONSTRUCTION/D&D - Site Infrastructure	0.0	0.0	0.0	0.0	0.0
CONSTRUCTION/D&D - National Laboratories	0.0	0.0	0.0	0.0	0.0
CONSTRUCTION/D&D - Site Constructors	0.0	0.0	0.0	0.0	0.0
CONSTRUCTION/D&D - Architecture/Engineering Contracto	0.0	0.0	0.0	0.0	0.0
CONSTRUCTION/D&D - Construction Contractor	0.0	0.0	0.0	0.0	0.0
OPERATIONS - Site Management/Operations	13.6	16.2	16.2	14.5	14.5
OPERATIONS - Site Infrastructure	2.4	2.9	2.9	2.6	2.6
OPERATIONS - National Laboratories	1.7	2.0	2.0	1.8	1.8
OPERATIONS - Site Constructors	0.0	0.0	0.0	0.0	0.0
OPERATIONS - Architecture/Engineering Contractors	0.0	0.0	0.0	0.0	0.0
OPERATIONS - Construction Contractor	0.0	0.0	0.0	0.0	0.0
Worker Category Reddick FTE (FTE)					
Engineer/Management	3.1	3.6	3.6	3.3	3.3
Crafts	0.0	0.0	0.0	0.0	0.0
Maintenance	4.6	5.5	5.5	4.9	4.9
Operators	7.7	9.1	9.1	8.1	8.1
Infrastructure	2.4	2.9	2.9	2.6	2.6
Total	17.7	21.0	21.0	18.8	18.8

ALTERNATIVE 2 RETRIEVAL COST SUMMARY	FY06	FY07	FY08	FY09	FY10
Studies/Permitting	0	0	0	0	0
Design	0	0	0	0	0
Construction/D&D	0	0	0	0	0
Operation	3,200,000	3,800,000	3,800,000	3,400,000	3,400,000
Total	3,200,000	3,800,000	3,800,000	3,400,000	3,400,000

ALTERNATIVE 2 RETRIEVAL FTE SUMMARY	FY06	FY07	FY08	FY09	FY10
Engineer/Management	3.1	3.6	3.6	3.3	3.3
Crafts	0.0	0.0	0.0	0.0	0.0
Maintenance	4.6	5.5	5.5	4.9	4.9
Operators	7.7	9.1	9.1	8.1	8.1
Infrastructure	2.4	2.9	2.9	2.6	2.6
Total	17.7	21.0	21.0	18.8	18.8

ALTERNATIVE 2 RETRIEVAL REDDICK COST BREAKDOWN	FY11	FY12	FY13	FY14	FY15	FY16	FY17
Activity % of Alt 2 Retrieval Reddick Costs (%)							
Studies/Permitting	0	0	0	0	0	0	0
Design	0	0	0	0	0	0	0
Construction/D&D	0	0	0	0	0	0	0
Operation	0	0	0	0	0	0	0
Total Percentage	0	0	0	0	0	0	0
Alt 2 Retrieval Activity Reddick Costs($)							
Studies/Permitting	0	0	0	0	0	0	0
Design	0	0	0	0	0	0	0
Construction/D&D	0	0	0	0	0	0	0
Operation	0	0	0	0	0	0	0
Total Cost	0	0	0	0	0	0	0

ALTERNATIVE 2 RETRIEVAL REDDICK FTE BREAKDOWN	FY11	FY12	FY13	FY14	FY15	FY16	FY17
Contractor Reddick FTE per Alt 2 Retrieval Activity (FTE)							
STUDIES/PERMITTING - Site Management/Operations	0.0	0.0	0.0	0.0	0.0	0.0	0.0
STUDIES/PERMITTING - Site Infrastructure	0.0	0.0	0.0	0.0	0.0	0.0	0.0
STUDIES/PERMITTING - National Laboratories	0.0	0.0	0.0	0.0	0.0	0.0	0.0
STUDIES/PERMITTING - Site Constructors	0.0	0.0	0.0	0.0	0.0	0.0	0.0
STUDIES/PERMITTING - Architecture/Engineering Contract	0.0	0.0	0.0	0.0	0.0	0.0	0.0
STUDIES/PERMITTING - Construction Contractor	0.0	0.0	0.0	0.0	0.0	0.0	0.0
DESIGN - Site Management/Operations	0.0	0.0	0.0	0.0	0.0	0.0	0.0
DESIGN - Site Infrastructure	0.0	0.0	0.0	0.0	0.0	0.0	0.0
DESIGN - National Laboratories	0.0	0.0	0.0	0.0	0.0	0.0	0.0
DESIGN - Site Constructors	0.0	0.0	0.0	0.0	0.0	0.0	0.0
DESIGN - Architecture/Engineering Contractors	0.0	0.0	0.0	0.0	0.0	0.0	0.0
DESIGN - Construction Contractor	0.0	0.0	0.0	0.0	0.0	0.0	0.0
CONSTRUCTION/D&D - Site Management/Operations	0.0	0.0	0.0	0.0	0.0	0.0	0.0
CONSTRUCTION/D&D - Site Infrastructure	0.0	0.0	0.0	0.0	0.0	0.0	0.0
CONSTRUCTION/D&D - National Laboratories	0.0	0.0	0.0	0.0	0.0	0.0	0.0
CONSTRUCTION/D&D - Site Constructors	0.0	0.0	0.0	0.0	0.0	0.0	0.0
CONSTRUCTION/D&D - Architecture/Engineering Contracto	0.0	0.0	0.0	0.0	0.0	0.0	0.0
CONSTRUCTION/D&D - Construction Contractor	0.0	0.0	0.0	0.0	0.0	0.0	0.0
OPERATIONS - Site Management/Operations	0.0	0.0	0.0	0.0	0.0	0.0	0.0
OPERATIONS - Site Infrastructure	0.0	0.0	0.0	0.0	0.0	0.0	0.0
OPERATIONS - National Laboratories	0.0	0.0	0.0	0.0	0.0	0.0	0.0
OPERATIONS - Site Constructors	0.0	0.0	0.0	0.0	0.0	0.0	0.0
OPERATIONS - Architecture/Engineering Contractors	0.0	0.0	0.0	0.0	0.0	0.0	0.0
OPERATIONS - Construction Contractor	0.0	0.0	0.0	0.0	0.0	0.0	0.0
Worker Category Reddick FTE (FTE)							
Engineer/Management	0.0	0.0	0.0	0.0	0.0	0.0	0.0
Crafts	0.0	0.0	0.0	0.0	0.0	0.0	0.0
Maintenance	0.0	0.0	0.0	0.0	0.0	0.0	0.0
Operators	0.0	0.0	0.0	0.0	0.0	0.0	0.0
Infrastructure	0.0	0.0	0.0	0.0	0.0	0.0	0.0
Total	0.0	0.0	0.0	0.0	0.0	0.0	0.0

ALTERNATIVE 2 RETRIEVAL COST SUMMARY	FY11	FY12	FY13	FY14	FY15	FY16	FY17
Studies/Permitting	0	0	0	0	0	0	0
Design	0	0	0	0	0	0	0
Construction/D&D	0	0	0	0	0	0	0
Operation	0	0	0	0	0	0	0
Total	0	0	0	0	0	0	0

ALTERNATIVE 2 RETRIEVAL FTE SUMMARY	FY11	FY12	FY13	FY14	FY15	FY16	FY17
Engineer/Management	0.0	0.0	0.0	0.0	0.0	0.0	0.0
Crafts	0.0	0.0	0.0	0.0	0.0	0.0	0.0
Maintenance	0.0	0.0	0.0	0.0	0.0	0.0	0.0
Operators	0.0	0.0	0.0	0.0	0.0	0.0	0.0
Infrastructure	0.0	0.0	0.0	0.0	0.0	0.0	0.0
Total	0.0	0.0	0.0	0.0	0.0	0.0	0.0

ALTERNATIVE 2 RETRIEVAL REDDICK COST BREAKDOWN	FY18	FY19	FY20	FY21	FY22	FY23	FY24	FY25	FY26	FY27	FY28	FY29
Activity % of Alt 2 Retrieval Reddick Costs (%)												
Studies/Permitting	0	0	0	0	0	0	0	0	0	0	0	0
Design	0	0	0	0	0	0	0	0	0	0	0	0
Construction/D&D	0	0	0	0	0	0	0	0	0	0	0	0
Operation	0	0	0	0	0	0	0	0	0	0	0	0
Total Percentage	0	0	0	0	0	0	0	0	0	0	0	0
Alt 2 Retrieval Activity Reddick Costs($)												
Studies/Permitting	0	0	0	0	0	0	0	0	0	0	0	0
Design	0	0	0	0	0	0	0	0	0	0	0	0
Construction/D&D	0	0	0	0	0	0	0	0	0	0	0	0
Operation	0	0	0	0	0	0	0	0	0	0	0	0
Total Cost	0	0	0	0	0	0	0	0	0	0	0	0

ALTERNATIVE 2 RETRIEVAL REDDICK FTE BREAKDOWN	FY18	FY19	FY20	FY21	FY22	FY23	FY24	FY25	FY26	FY27	FY28	FY29
Contractor Reddick FTE per Alt 2 Retrieval Activity (FTE)												
STUDIES/PERMITTING - Site Management/Operations	0.0	0.0	0.0	0.0	0.0	0.0	0.0	0.0	0.0	0.0	0.0	0.0
STUDIES/PERMITTING - Site Infrastructure	0.0	0.0	0.0	0.0	0.0	0.0	0.0	0.0	0.0	0.0	0.0	0.0
STUDIES/PERMITTING - National Laboratories	0.0	0.0	0.0	0.0	0.0	0.0	0.0	0.0	0.0	0.0	0.0	0.0
STUDIES/PERMITTING - Site Constructors	0.0	0.0	0.0	0.0	0.0	0.0	0.0	0.0	0.0	0.0	0.0	0.0
STUDIES/PERMITTING - Architecture/Engineering Contract	0.0	0.0	0.0	0.0	0.0	0.0	0.0	0.0	0.0	0.0	0.0	0.0
STUDIES/PERMITTING - Construction Contractor	0.0	0.0	0.0	0.0	0.0	0.0	0.0	0.0	0.0	0.0	0.0	0.0
DESIGN - Site Management/Operations	0.0	0.0	0.0	0.0	0.0	0.0	0.0	0.0	0.0	0.0	0.0	0.0
DESIGN - Site Infrastructure	0.0	0.0	0.0	0.0	0.0	0.0	0.0	0.0	0.0	0.0	0.0	0.0
DESIGN - National Laboratories	0.0	0.0	0.0	0.0	0.0	0.0	0.0	0.0	0.0	0.0	0.0	0.0
DESIGN - Site Constructors	0.0	0.0	0.0	0.0	0.0	0.0	0.0	0.0	0.0	0.0	0.0	0.0
DESIGN - Architecture/Engineering Contractors	0.0	0.0	0.0	0.0	0.0	0.0	0.0	0.0	0.0	0.0	0.0	0.0
DESIGN - Construction Contractor	0.0	0.0	0.0	0.0	0.0	0.0	0.0	0.0	0.0	0.0	0.0	0.0
CONSTRUCTION/D&D - Site Management/Operations	0.0	0.0	0.0	0.0	0.0	0.0	0.0	0.0	0.0	0.0	0.0	0.0
CONSTRUCTION/D&D - Site Infrastructure	0.0	0.0	0.0	0.0	0.0	0.0	0.0	0.0	0.0	0.0	0.0	0.0
CONSTRUCTION/D&D - National Laboratories	0.0	0.0	0.0	0.0	0.0	0.0	0.0	0.0	0.0	0.0	0.0	0.0
CONSTRUCTION/D&D - Site Constructors	0.0	0.0	0.0	0.0	0.0	0.0	0.0	0.0	0.0	0.0	0.0	0.0
CONSTRUCTION/D&D - Architecture/Engineering Contracto	0.0	0.0	0.0	0.0	0.0	0.0	0.0	0.0	0.0	0.0	0.0	0.0
CONSTRUCTION/D&D - Construction Contractor	0.0	0.0	0.0	0.0	0.0	0.0	0.0	0.0	0.0	0.0	0.0	0.0
OPERATIONS - Site Management/Operations	0.0	0.0	0.0	0.0	0.0	0.0	0.0	0.0	0.0	0.0	0.0	0.0
OPERATIONS - Site Infrastructure	0.0	0.0	0.0	0.0	0.0	0.0	0.0	0.0	0.0	0.0	0.0	0.0
OPERATIONS - National Laboratories	0.0	0.0	0.0	0.0	0.0	0.0	0.0	0.0	0.0	0.0	0.0	0.0
OPERATIONS - Site Constructors	0.0	0.0	0.0	0.0	0.0	0.0	0.0	0.0	0.0	0.0	0.0	0.0
OPERATIONS - Architecture/Engineering Contractors	0.0	0.0	0.0	0.0	0.0	0.0	0.0	0.0	0.0	0.0	0.0	0.0
OPERATIONS - Construction Contractor	0.0	0.0	0.0	0.0	0.0	0.0	0.0	0.0	0.0	0.0	0.0	0.0
Worker Category Reddick FTE (FTE)												
Engineer/Management	0.0	0.0	0.0	0.0	0.0	0.0	0.0	0.0	0.0	0.0	0.0	0.0
Crafts	0.0	0.0	0.0	0.0	0.0	0.0	0.0	0.0	0.0	0.0	0.0	0.0
Maintenance	0.0	0.0	0.0	0.0	0.0	0.0	0.0	0.0	0.0	0.0	0.0	0.0
Operators	0.0	0.0	0.0	0.0	0.0	0.0	0.0	0.0	0.0	0.0	0.0	0.0
Infrastructure	0.0	0.0	0.0	0.0	0.0	0.0	0.0	0.0	0.0	0.0	0.0	0.0
Total	0.0	0.0	0.0	0.0	0.0	0.0	0.0	0.0	0.0	0.0	0.0	0.0

ALTERNATIVE 2 RETRIEVAL COST SUMMARY	FY18	FY19	FY20	FY21	FY22	FY23	FY24	FY25	FY26	FY27	FY28	FY29
Studies/Permitting	0	0	0	0	0	0	0	0	0	0	0	0
Design	0	0	0	0	0	0	0	0	0	0	0	0
Construction/D&D	0	0	0	0	0	0	0	0	0	0	0	0
Operation	0	0	0	0	0	0	0	0	0	0	0	0
Total	0	0	0	0	0	0	0	0	0	0	0	0

ALTERNATIVE 2 RETRIEVAL FTE SUMMARY	FY18	FY19	FY20	FY21	FY22	FY23	FY24	FY25	FY26	FY27	FY28	FY29
Engineer/Management	0.0	0.0	0.0	0.0	0.0	0.0	0.0	0.0	0.0	0.0	0.0	0.0
Crafts	0.0	0.0	0.0	0.0	0.0	0.0	0.0	0.0	0.0	0.0	0.0	0.0
Maintenance	0.0	0.0	0.0	0.0	0.0	0.0	0.0	0.0	0.0	0.0	0.0	0.0
Operators	0.0	0.0	0.0	0.0	0.0	0.0	0.0	0.0	0.0	0.0	0.0	0.0
Infrastructure	0.0	0.0	0.0	0.0	0.0	0.0	0.0	0.0	0.0	0.0	0.0	0.0
Total	0.0	0.0	0.0	0.0	0.0	0.0	0.0	0.0	0.0	0.0	0.0	0.0

ALTERNATIVE 2 RETRIEVAL REDDICK COST BREAKDOWN	FY30	FY31	FY32	FY33	FY34	FY35	FY36	FY37	FY38	FY39	FY40
Activity % of Alt 2 Retrieval Reddick Costs (%)											
Studies/Permitting	0	0	0	0	0	0	0	0	0	0	0
Design	0	0	0	0	0	0	0	0	0	0	0
Construction/D&D	0	0	0	0	0	0	0	0	0	0	0
Operation	0	0	0	0	0	0	0	0	0	0	0
Total Percentage	0	0	0	0	0	0	0	0	0	0	0
Alt 2 Retrieval Activity Reddick Costs($)											
Studies/Permitting	0	0	0	0	0	0	0	0	0	0	0
Design	0	0	0	0	0	0	0	0	0	0	0
Construction/D&D	0	0	0	0	0	0	0	0	0	0	0
Operation	0	0	0	0	0	0	0	0	0	0	0
Total Cost	0	0	0	0	0	0	0	0	0	0	0

ALTERNATIVE 2 RETRIEVAL REDDICK FTE BREAKDOWN	FY30	FY31	FY32	FY33	FY34	FY35	FY36	FY37	FY38	FY39	FY40
Contractor Reddick FTE per Alt 2 Retrieval Activity (FTE)											
STUDIES/PERMITTING - Site Management/Operations	0.0	0.0	0.0	0.0	0.0	0.0	0.0	0.0	0.0	0.0	0.0
STUDIES/PERMITTING - Site Infrastructure	0.0	0.0	0.0	0.0	0.0	0.0	0.0	0.0	0.0	0.0	0.0
STUDIES/PERMITTING - National Laboratories	0.0	0.0	0.0	0.0	0.0	0.0	0.0	0.0	0.0	0.0	0.0
STUDIES/PERMITTING - Site Constructors	0.0	0.0	0.0	0.0	0.0	0.0	0.0	0.0	0.0	0.0	0.0
STUDIES/PERMITTING - Architecture/Engineering Contract	0.0	0.0	0.0	0.0	0.0	0.0	0.0	0.0	0.0	0.0	0.0
STUDIES/PERMITTING - Construction Contractor	0.0	0.0	0.0	0.0	0.0	0.0	0.0	0.0	0.0	0.0	0.0
DESIGN - Site Management/Operations	0.0	0.0	0.0	0.0	0.0	0.0	0.0	0.0	0.0	0.0	0.0
DESIGN - Site Infrastructure	0.0	0.0	0.0	0.0	0.0	0.0	0.0	0.0	0.0	0.0	0.0
DESIGN - National Laboratories	0.0	0.0	0.0	0.0	0.0	0.0	0.0	0.0	0.0	0.0	0.0
DESIGN - Site Constructors	0.0	0.0	0.0	0.0	0.0	0.0	0.0	0.0	0.0	0.0	0.0
DESIGN - Architecture/Engineering Contractors	0.0	0.0	0.0	0.0	0.0	0.0	0.0	0.0	0.0	0.0	0.0
DESIGN - Construction Contractor	0.0	0.0	0.0	0.0	0.0	0.0	0.0	0.0	0.0	0.0	0.0
CONSTRUCTION/D&D - Site Management/Operations	0.0	0.0	0.0	0.0	0.0	0.0	0.0	0.0	0.0	0.0	0.0
CONSTRUCTION/D&D - Site Infrastructure	0.0	0.0	0.0	0.0	0.0	0.0	0.0	0.0	0.0	0.0	0.0
CONSTRUCTION/D&D - National Laboratories	0.0	0.0	0.0	0.0	0.0	0.0	0.0	0.0	0.0	0.0	0.0
CONSTRUCTION/D&D - Site Constructors	0.0	0.0	0.0	0.0	0.0	0.0	0.0	0.0	0.0	0.0	0.0
CONSTRUCTION/D&D - Architecture/Engineering Contracto	0.0	0.0	0.0	0.0	0.0	0.0	0.0	0.0	0.0	0.0	0.0
CONSTRUCTION/D&D - Construction Contractor	0.0	0.0	0.0	0.0	0.0	0.0	0.0	0.0	0.0	0.0	0.0
OPERATIONS - Site Management/Operations	0.0	0.0	0.0	0.0	0.0	0.0	0.0	0.0	0.0	0.0	0.0
OPERATIONS - Site Infrastructure	0.0	0.0	0.0	0.0	0.0	0.0	0.0	0.0	0.0	0.0	0.0
OPERATIONS - National Laboratories	0.0	0.0	0.0	0.0	0.0	0.0	0.0	0.0	0.0	0.0	0.0
OPERATIONS - Site Constructors	0.0	0.0	0.0	0.0	0.0	0.0	0.0	0.0	0.0	0.0	0.0
OPERATIONS - Architecture/Engineering Contractors	0.0	0.0	0.0	0.0	0.0	0.0	0.0	0.0	0.0	0.0	0.0
OPERATIONS - Construction Contractor	0.0	0.0	0.0	0.0	0.0	0.0	0.0	0.0	0.0	0.0	0.0
Worker Category Reddick FTE (FTE)											
Engineer/Management	0.0	0.0	0.0	0.0	0.0	0.0	0.0	0.0	0.0	0.0	0.0
Crafts	0.0	0.0	0.0	0.0	0.0	0.0	0.0	0.0	0.0	0.0	0.0
Maintenance	0.0	0.0	0.0	0.0	0.0	0.0	0.0	0.0	0.0	0.0	0.0
Operators	0.0	0.0	0.0	0.0	0.0	0.0	0.0	0.0	0.0	0.0	0.0
Infrastructure	0.0	0.0	0.0	0.0	0.0	0.0	0.0	0.0	0.0	0.0	0.0
Total	0.0	0.0	0.0	0.0	0.0	0.0	0.0	0.0	0.0	0.0	0.0

ALTERNATIVE 2 RETRIEVAL COST SUMMARY	FY30	FY31	FY32	FY33	FY34	FY35	FY36	FY37	FY38	FY39	FY40
Studies/Permitting	0	0	0	0	0	0	0	0	0	0	0
Design	0	0	0	0	0	0	0	0	0	0	0
Construction/D&D	0	0	0	0	0	0	0	0	0	0	0
Operation	0	0	0	0	0	0	0	0	0	0	0
Total	0	0	0	0	0	0	0	0	0	0	0

ALTERNATIVE 2 RETRIEVAL FTE SUMMARY	FY30	FY31	FY32	FY33	FY34	FY35	FY36	FY37	FY38	FY39	FY40
Engineer/Management	0.0	0.0	0.0	0.0	0.0	0.0	0.0	0.0	0.0	0.0	0.0
Crafts	0.0	0.0	0.0	0.0	0.0	0.0	0.0	0.0	0.0	0.0	0.0
Maintenance	0.0	0.0	0.0	0.0	0.0	0.0	0.0	0.0	0.0	0.0	0.0
Operators	0.0	0.0	0.0	0.0	0.0	0.0	0.0	0.0	0.0	0.0	0.0
Infrastructure	0.0	0.0	0.0	0.0	0.0	0.0	0.0	0.0	0.0	0.0	0.0
Total	0.0	0.0	0.0	0.0	0.0	0.0	0.0	0.0	0.0	0.0	0.0

ALTERNATIVE 2 RETRIEVAL REDDICK COST BREAKDOWN

Activity % of Alt 2 Retrieval Reddick Costs (%)	
Studies/Permitting	
Design	
Construction/D&D	
Operation	
Total Percentage	

Alt 2 Retrieval Activity Reddick Costs($)	Totals
Studies/Permitting	400,000
Design	3,440,000
Construction/D&D	8,640,000
Operation	26,640,000
Total Cost	39,120,000

ALTERNATIVE 2 RETRIEVAL REDDICK FTE BREAKDOWN

Contractor Reddick FTE per Alt 2 Retrieval Activity (FTE)	Totals
STUDIES/PERMITTING - Site Management/Operations	2.3
STUDIES/PERMITTING - Site Infrastructure	0.4
STUDIES/PERMITTING - National Laboratories	0.1
STUDIES/PERMITTING - Site Constructors	0.0
STUDIES/PERMITTING - Architecture/Engineering Contract	0.0
STUDIES/PERMITTING - Construction Contractor	0.0
DESIGN - Site Management/Operations	2.1
DESIGN - Site Infrastructure	0.4
DESIGN - National Laboratories	1.8
DESIGN - Site Constructors	1.2
DESIGN - Architecture/Engineering Contractors	14.3
DESIGN - Construction Contractor	0.0
CONSTRUCTION/D&D - Site Management/Operations	5.2
CONSTRUCTION/D&D - Site Infrastructure	0.9
CONSTRUCTION/D&D - National Laboratories	0.0
CONSTRUCTION/D&D - Site Constructors	3.1
CONSTRUCTION/D&D - Architecture/Engineering Contracto	2.4
CONSTRUCTION/D&D - Construction Contractor	50.8
OPERATIONS - Site Management/Operations	113.2
OPERATIONS - Site Infrastructure	20.0
OPERATIONS - National Laboratories	14.3
OPERATIONS - Site Constructors	0.0
OPERATIONS - Architecture/Engineering Contractors	0.0
OPERATIONS - Construction Contractor	0.0
Worker Category Reddick FTE (FTE)	
Engineer/Management	67.7
Crafts	41.3
Maintenance	38.3
Operators	63.8
Infrastructure	21.7
Total	232.7

ALTERNATIVE 2 RETRIEVAL COST SUMMARY	Totals
Studies/Permitting	65,226,682
Design	30,890,875
Construction/D&D	36,091,577
Operation	69,621,446
Total	201,830,580

ALTERNATIVE 2 RETRIEVAL FTE SUMMARY	Totals
Engineer/Management	709.1
Crafts	172.4
Maintenance	98.6
Operators	164.4
Infrastructure	103.5
Total	1,248.0

FUNCTION - ALTERNATIVE 2 PRETREATMENT	FY95	FY96	FY97	FY98	FY99	FY00
Technology Development (Test) Cost	17,262,028	16,119,000	16,086,284	11,575,785	11,575,785	4,758,768
Operate LLW Pretreatment Mod 1 Facility First Year (Hot Test)	0	0	0	0	0	0
Operate LLW Pretreatment Mod 2 Facility First Year (Hot Test)	0	0	0	0	0	0
Prepare for Start Up In Tank Processing	0	0	1,063,794	12,714,867	1,114,451	0
Start-up In-Tank Processing	0	0	0	0	3,718,683	4,075,936
Start-up and Operate Pretreatment Pilot Testing	0	0	2,744,937	10,936,178	10,936,178	1,786,388
Continue Operation of Pilot Testing	0	0				11,015,598
Tank AZ-101 Sludge Test (PSW49XXX)	959,856	1,267,219	997,975	10,625,079	37,644	0
Prep LLW Pretreatment Mod 1 Facility For Start-up Phase 2 (Co	0	0	0	0	0	0
Prep LLW Pretreatment Mod 2 Facility For Start-up Phase 2 (Co	0	0	0	0	0	0
WESF Hot Cell Test (PDW211XX)	12,369,178	10,792,515	8,701,654	5,232,769	867,496	0
Operate HLW Pretreatment Facility - First Year (Hot Test)	0	0	0	0	0	0
Prepare HLW Pretreatment Facility for Start-up (Cold Test)	0	0	0	0	0	0
Subtotal Test Costs	30,591,062	28,178,734	29,594,644	51,084,678	28,250,237	21,636,690
Test Oversight Costs	3,059,106	2,817,873	2,959,464	5,108,468	2,825,024	2,163,669
Total Pretreatment Base Costs	33,650,168	30,996,607	32,554,108	56,193,146	31,075,261	23,800,359
Total Alt 2 Reddick Costs	2,000,000	2,000,000	6,000,000	10,000,000	38,000,000	38,000,000
Pretreatment % of Total Alt 2 Reddick Costs	*37*	*37*	*37*	*37*	*37*	*37*
Alt 2 Pretreatment Reddick Costs	740,000	740,000	2,220,000	3,700,000	14,060,000	14,060,000
Alt 2 Pretreatment Test Costs ($)	34,390,168	31,736,607	34,774,108	59,893,146	45,135,261	37,860,359

ALTERNATIVE 2 PRETREATMENT BASE COST BREAKDOWN	FY95	FY96	FY97	FY98	FY99	FY00
Activity % of Alt 2 Pretreatment Base Costs (%)						
Studies/Permitting	20	20	20	10	15	15
Design	5	5	5	5	5	5
Construction/D&D	25	25	25	10	5	5
Operation	50	50	50	75	75	75
Total Percentage	100	100	100	100	100	100
Alt 2 Pretreatment Activity Base Costs($)						
Studies/Permitting	6,730,034	6,199,321	6,510,822	5,619,315	4,661,289	3,570,054
Design	1,682,508	1,549,830	1,627,705	2,809,657	1,553,763	1,190,018
Construction/D&D	8,412,542	7,749,152	8,138,527	5,619,315	1,553,763	1,190,018
Operation	16,825,084	15,498,304	16,277,054	42,144,859	23,306,446	17,850,269
Total Cost	33,650,168	30,996,607	32,554,108	56,193,146	31,075,261	23,800,359

ALTERNATIVE 2 PRETREATMENT BASE FTE BREAKDOWN	FY95	FY96	FY97	FY98	FY99	FY00
Contractor Base FTE per Alt 2 Pretreatment Activity (FTE)						
STUDIES/PERMITTING - Site Management/Operations	30.6	28.2	29.6	25.6	21.2	16.3
STUDIES/PERMITTING - Site Infrastructure	5.4	5.0	5.2	4.5	3.7	2.9
STUDIES/PERMITTING - National Laboratories	9.0	8.3	8.7	7.5	6.3	4.8
STUDIES/PERMITTING - Site Constructors	0.0	0.0	0.0	0.0	0.0	0.0
STUDIES/PERMITTING - Architecture/Engineering Contractors	0.0	0.0	0.0	0.0	0.0	0.0
STUDIES/PERMITTING - Construction Contractor	0.0	0.0	0.0	0.0	0.0	0.0
DESIGN - Site Management/Operations	1.0	0.9	1.0	1.7	0.9	0.7
DESIGN - Site Infrastructure	0.2	0.2	0.2	0.3	0.2	0.1
DESIGN - National Laboratories	0.9	0.8	0.9	1.5	0.8	0.6
DESIGN - Site Constructors	0.6	0.6	0.6	1.0	0.6	0.4
DESIGN - Architecture/Engineering Contractors	7.0	6.5	6.8	11.7	6.5	5.0
DESIGN - Construction Contractor	0.0	0.0	0.0	0.0	0.0	0.0
CONSTRUCTION/D&D - Site Management/Operations	2.6	2.4	2.5	1.7	0.5	0.4
CONSTRUCTION/D&D - Site Infrastructure	0.5	0.4	0.4	0.3	0.1	0.1
CONSTRUCTION/D&D - National Laboratories	2.3	2.1	2.2	1.5	0.4	0.3
CONSTRUCTION/D&D - Site Constructors	3.0	2.8	2.9	2.0	0.6	0.4
CONSTRUCTION/D&D - Architecture/Engineering Contractors	2.3	2.2	2.3	1.6	0.4	0.3
CONSTRUCTION/D&D - Construction Contractor	49.5	45.6	47.9	33.1	9.1	7.0
OPERATIONS - Site Management/Operations	56.2	51.8	54.4	140.7	77.8	59.6
OPERATIONS - Site Infrastructure	9.9	9.1	9.6	24.8	13.7	10.5
OPERATIONS - National Laboratories	22.6	20.8	21.8	56.5	31.3	23.9
OPERATIONS - Site Constructors	0.0	0.0	0.0	0.0	0.0	0.0
OPERATIONS - Architecture/Engineering Contractors	0.0	0.0	0.0	0.0	0.0	0.0
OPERATIONS - Construction Contractor	0.0	0.0	0.0	0.0	0.0	0.0

Worker Category Base FTE (FTE)	FY95	FY96	FY97	FY98	FY99	FY00
Engineer/Management	84.4	77.8	81.7	101.5	61.7	47.3
Crafts	40.2	37.0	38.9	26.8	7.4	5.7
Maintenance	23.6	21.8	22.9	59.2	32.7	25.1
Operators	39.4	36.3	38.1	98.6	54.5	41.8
Infrastructure	16.0	14.7	15.4	30.0	17.7	13.6
Total	203.6	187.5	196.9	316.1	174.1	133.4

FUNCTION - ALTERNATIVE 2 PRETREATMENT	FY01	FY02	FY03	FY04	FY05	FY06
Technology Development (Test) Cost	4,739,809	800,285	500,285	0	0	0
Operate LLW Pretreatment Mod 1 Facility First Year (Hot Test)	0	0	0	0	38,794,388	12,520,940
Operate LLW Pretreatment Mod 2 Facility First Year (Hot Test)	0	0	0	0		20,418,986
Prepare for Start Up In Tank Processing	0	0	0	0	0	0
Start-up In-Tank Processing	4,059,698	4,075,936	4,075,936	4,092,175	341,015	0
Start-up and Operate Pretreatment Pilot Testing	0	0	0	0	0	0
Continue Operation of Pilot Testing	13,113,807	2,255,575	0	0	0	0
Tank AZ-101 Sludge Test (PSW49XXX)	0	0	0	0	0	0
Prep LLW Pretreatment Mod 1 Facility For Start-up Phase 2 (Co	0	0	0	11,059,206	3,608,794	0
Prep LLW Pretreatment Mod 2 Facility For Start-up Phase 2 (Co	0	0	0		17,903,592	5,778,408
WESF Hot Cell Test (PDW211XX)	0	0	0	0	0	0
Operate HLW Pretreatment Facility - First Year (Hot Test)	0	0	0	0	0	0
Prepare HLW Pretreatment Facility for Start-up (Cold Test)	0	0	0	0	0	0
Subtotal Test Costs	21,913,314	7,131,796	4,576,221	15,151,381	60,647,789	38,718,334
Test Oversight Costs	2,191,331	713,180	457,622	1,515,138	6,064,779	3,871,833
Total Pretreatment Base Costs	24,104,645	7,844,976	5,033,843	16,666,519	66,712,568	42,590,167
Total Alt 2 Reddick Costs	39,000,000	76,000,000	101,000,000	106,000,000	120,000,000	80,000,000
Pretreatment % of Total Alt 2 Reddick Costs	*37*	*37*	*37*	*37*	*37*	*37*
Alt 2 Pretreatment Reddick Costs	14,430,000	28,120,000	37,370,000	39,220,000	44,400,000	29,600,000
Alt 2 Pretreatment Test Costs ($)	38,534,645	35,964,976	42,403,843	55,886,519	111,112,568	72,190,167

ALTERNATIVE 2 PRETREATMENT BASE COST BREAKDOWN	FY01	FY02	FY03	FY04	FY05	FY06
Activity % of Alt 2 Pretreatment Base Costs (%)						
Studies/Permitting	15	10	10	10	5	5
Design	5	0	0	0	0	0
Construction/D&D	0	0	0	0	0	0
Operation	80	90	90	90	95	95
Total Percentage	100	100	100	100	100	100
Alt 2 Pretreatment Activity Base Costs($)						
Studies/Permitting	3,615,697	784,498	503,384	1,666,652	3,335,628	2,129,508
Design	1,205,232	0	0	0	0	0
Construction/D&D	0	0	0	0	0	0
Operation	19,283,716	7,060,478	4,530,459	14,999,867	63,376,940	40,460,659
Total Cost	24,104,645	7,844,976	5,033,843	16,666,519	66,712,568	42,590,167

ALTERNATIVE 2 PRETREATMENT BASE FTE BREAKDOWN	FY01	FY02	FY03	FY04	FY05	FY06
Contractor Base FTE per Alt 2 Pretreatment Activity (FTE)						
STUDIES/PERMITTING - Site Management/Operations	16.5	3.6	2.3	7.6	15.2	9.7
STUDIES/PERMITTING - Site Infrastructure	2.9	0.6	0.4	1.3	2.7	1.7
STUDIES/PERMITTING - National Laboratories	4.9	1.1	0.7	2.2	4.5	2.9
STUDIES/PERMITTING - Site Constructors	0.0	0.0	0.0	0.0	0.0	0.0
STUDIES/PERMITTING - Architecture/Engineering Contractors	0.0	0.0	0.0	0.0	0.0	0.0
STUDIES/PERMITTING - Construction Contractor	0.0	0.0	0.0	0.0	0.0	0.0
DESIGN - Site Management/Operations	0.7	0.0	0.0	0.0	0.0	0.0
DESIGN - Site Infrastructure	0.1	0.0	0.0	0.0	0.0	0.0
DESIGN - National Laboratories	0.6	0.0	0.0	0.0	0.0	0.0
DESIGN - Site Constructors	0.4	0.0	0.0	0.0	0.0	0.0
DESIGN - Architecture/Engineering Contractors	5.0	0.0	0.0	0.0	0.0	0.0
DESIGN - Construction Contractor	0.0	0.0	0.0	0.0	0.0	0.0
CONSTRUCTION/D&D - Site Management/Operations	0.0	0.0	0.0	0.0	0.0	0.0
CONSTRUCTION/D&D - Site Infrastructure	0.0	0.0	0.0	0.0	0.0	0.0
CONSTRUCTION/D&D - National Laboratories	0.0	0.0	0.0	0.0	0.0	0.0
CONSTRUCTION/D&D - Site Constructors	0.0	0.0	0.0	0.0	0.0	0.0
CONSTRUCTION/D&D - Architecture/Engineering Contractors	0.0	0.0	0.0	0.0	0.0	0.0
CONSTRUCTION/D&D - Construction Contractor	0.0	0.0	0.0	0.0	0.0	0.0
OPERATIONS - Site Management/Operations	64.4	23.6	15.1	50.1	211.6	135.1
OPERATIONS - Site Infrastructure	11.4	4.2	2.7	8.8	37.3	23.8
OPERATIONS - National Laboratories	25.9	9.5	6.1	20.1	85.0	54.3
OPERATIONS - Site Constructors	0.0	0.0	0.0	0.0	0.0	0.0
OPERATIONS - Architecture/Engineering Contractors	0.0	0.0	0.0	0.0	0.0	0.0
OPERATIONS - Construction Contractor	0.0	0.0	0.0	0.0	0.0	0.0

Worker Category Base FTE (FTE)	FY01	FY02	FY03	FY04	FY05	FY06
Engineer/Management	46.2	11.2	7.2	23.9	79.0	50.4
Crafts	0.0	0.0	0.0	0.0	0.0	0.0
Maintenance	27.1	9.9	6.4	21.1	89.0	56.8
Operators	45.1	16.5	10.6	35.1	148.3	94.7
Infrastructure	14.4	4.8	3.1	10.2	40.0	25.6
Total	132.8	42.5	27.2	90.2	356.3	227.5

FUNCTION - ALTERNATIVE 2 PRETREATMENT	FY07	FY08	FY09	FY10	FY11	FY12
Technology Development (Test) Cost	0	0	0	0	0	0
Operate LLW Pretreatment Mod 1 Facility First Year (Hot Test)	0	0	0	0	0	0
Operate LLW Pretreatment Mod 2 Facility First Year (Hot Test)	6,590,255	0	0	0	0	0
Prepare for Start Up In Tank Processing	0	0	0	0	0	0
Start-up In-Tank Processing	0	0	0	0	0	0
Start-up and Operate Pretreatment Pilot Testing	0	0	0	0	0	0
Continue Operation of Pilot Testing	0	0	0	0	0	0
Tank AZ-101 Sludge Test (PSW49XXX)	0	0	0	0	0	0
Prep LLW Pretreatment Mod 1 Facility For Start-up Phase 2 (Co	0	0	0	0	0	0
Prep LLW Pretreatment Mod 2 Facility For Start-up Phase 2 (Co	0	0	0	0	0	0
WESF Hot Cell Test (PDW211XX)	0	0	0	0	0	0
Operate HLW Pretreatment Facility - First Year (Hot Test)	0	965,396	0	0	0	0
Prepare HLW Pretreatment Facility for Start-up (Cold Test)	1,061,420	2,122,840	0	0	0	0
Subtotal Test Costs	7,651,675	3,088,236	0	0	0	0
Test Oversight Costs	765,168	308,824	0	0	0	0
Total Pretreatment Base Costs	8,416,843	3,397,060	0	0	0	0
Total Alt 2 Reddick Costs	95,000,000	95,000,000	85,000,000	85,000,000		
Pretreatment % of Total Alt 2 Reddick Costs	*37*	*37*	*37*	*37*		
Alt 2 Pretreatment Reddick Costs	35,150,000	35,150,000	31,450,000	31,450,000	0	0
Alt 2 Pretreatment Test Costs ($)	43,566,843	38,547,060	31,450,000	31,450,000	0	0

ALTERNATIVE 2 PRETREATMENT BASE COST BREAKDOWN	FY07	FY08	FY09	FY10	FY11	FY12
Activity % of Alt 2 Pretreatment Base Costs (%)						
Studies/Permitting	5	5	0	0	0	0
Design	0	0	0	0	0	0
Construction/D&D	0	0	0	0	0	0
Operation	95	95	0	0	0	0
Total Percentage	100	100	0	0	0	0
Alt 2 Pretreatment Activity Base Costs($)						
Studies/Permitting	420,842	169,853	0	0	0	0
Design	0	0	0	0	0	0
Construction/D&D	0	0	0	0	0	0
Operation	7,996,000	3,227,207	0	0	0	0
Total Cost	8,416,843	3,397,060	0	0	0	0

ALTERNATIVE 2 PRETREATMENT BASE FTE BREAKDOWN	FY07	FY08	FY09	FY10	FY11	FY12
Contractor Base FTE per Alt 2 Pretreatment Activity (FTE)						
STUDIES/PERMITTING - Site Management/Operations	1.9	0.8	0.0	0.0	0.0	0.0
STUDIES/PERMITTING - Site Infrastructure	0.3	0.1	0.0	0.0	0.0	0.0
STUDIES/PERMITTING - National Laboratories	0.6	0.2	0.0	0.0	0.0	0.0
STUDIES/PERMITTING - Site Constructors	0.0	0.0	0.0	0.0	0.0	0.0
STUDIES/PERMITTING - Architecture/Engineering Contractors	0.0	0.0	0.0	0.0	0.0	0.0
STUDIES/PERMITTING - Construction Contractor	0.0	0.0	0.0	0.0	0.0	0.0
DESIGN - Site Management/Operations	0.0	0.0	0.0	0.0	0.0	0.0
DESIGN - Site Infrastructure	0.0	0.0	0.0	0.0	0.0	0.0
DESIGN - National Laboratories	0.0	0.0	0.0	0.0	0.0	0.0
DESIGN - Site Constructors	0.0	0.0	0.0	0.0	0.0	0.0
DESIGN - Architecture/Engineering Contractors	0.0	0.0	0.0	0.0	0.0	0.0
DESIGN - Construction Contractor	0.0	0.0	0.0	0.0	0.0	0.0
CONSTRUCTION/D&D - Site Management/Operations	0.0	0.0	0.0	0.0	0.0	0.0
CONSTRUCTION/D&D - Site Infrastructure	0.0	0.0	0.0	0.0	0.0	0.0
CONSTRUCTION/D&D - National Laboratories	0.0	0.0	0.0	0.0	0.0	0.0
CONSTRUCTION/D&D - Site Constructors	0.0	0.0	0.0	0.0	0.0	0.0
CONSTRUCTION/D&D - Architecture/Engineering Contractors	0.0	0.0	0.0	0.0	0.0	0.0
CONSTRUCTION/D&D - Construction Contractor	0.0	0.0	0.0	0.0	0.0	0.0
OPERATIONS - Site Management/Operations	26.7	10.8	0.0	0.0	0.0	0.0
OPERATIONS - Site Infrastructure	4.7	1.9	0.0	0.0	0.0	0.0
OPERATIONS - National Laboratories	10.7	4.3	0.0	0.0	0.0	0.0
OPERATIONS - Site Constructors	0.0	0.0	0.0	0.0	0.0	0.0
OPERATIONS - Architecture/Engineering Contractors	0.0	0.0	0.0	0.0	0.0	0.0
OPERATIONS - Construction Contractor	0.0	0.0	0.0	0.0	0.0	0.0

Worker Category Base FTE (FTE)	FY07	FY08	FY09	FY10	FY11	FY12
Engineer/Management	10.0	4.0	0.0	0.0	0.0	0.0
Crafts	0.0	0.0	0.0	0.0	0.0	0.0
Maintenance	11.2	4.5	0.0	0.0	0.0	0.0
Operators	18.7	7.6	0.0	0.0	0.0	0.0
Infrastructure	5.1	2.0	0.0	0.0	0.0	0.0
Total	45.0	18.1	0.0	0.0	0.0	0.0

FUNCTION - ALTERNATIVE 2 PRETREATMENT	FY13	FY14	FY15	FY16	FY17	FY18	FY19	FY20	FY21	FY22
Technology Development (Test) Cost	0	0	0	0	0	0	0	0	0	0
Operate LLW Pretreatment Mod 1 Facility First Year (Hot Test)	0	0	0	0	0	0	0	0	0	0
Operate LLW Pretreatment Mod 2 Facility First Year (Hot Test)	0	0	0	0	0	0	0	0	0	0
Prepare for Start Up In Tank Processing	0	0	0	0	0	0	0	0	0	0
Start-up In-Tank Processing	0	0	0	0	0	0	0	0	0	0
Start-up and Operate Pretreatment Pilot Testing	0	0	0	0	0	0	0	0	0	0
Continue Operation of Pilot Testing	0	0	0	0	0	0	0	0	0	0
Tank AZ-101 Sludge Test (PSW49XXX)	0	0	0	0	0	0	0	0	0	0
Prep LLW Pretreatment Mod 1 Facility For Start-up Phase 2 (Co	0	0	0	0	0	0	0	0	0	0
Prep LLW Pretreatment Mod 2 Facility For Start-up Phase 2 (Co	0	0	0	0	0	0	0	0	0	0
WESF Hot Cell Test (PDW211XX)	0	0	0	0	0	0	0	0	0	0
Operate HLW Pretreatment Facility - First Year (Hot Test)	0	0	0	0	0	0	0	0	0	0
Prepare HLW Pretreatment Facility for Start-up (Cold Test)	0	0	0	0	0	0	0	0	0	0
Subtotal Test Costs	0	0	0	0	0	0	0	0	0	0
Test Oversight Costs	0	0	0	0	0	0	0	0	0	0
Total Pretreatment Base Costs	0	0	0	0	0	0	0	0	0	0
Total Alt 2 Reddick Costs										
Pretreatment % of Total Alt 2 Reddick Costs										
Alt 2 Pretreatment Reddick Costs	0	0	0	0	0	0	0	0	0	0
Alt 2 Pretreatment Test Costs ($)	0	0	0	0	0	0	0	0	0	0

ALTERNATIVE 2 PRETREATMENT BASE COST BREAKDOWN	FY13	FY14	FY15	FY16	FY17	FY18	FY19	FY20	FY21	FY22
Activity % of Alt 2 Pretreatment Base Costs (%)										
Studies/Permitting	0	0	0	0	0	0	0	0	0	0
Design	0	0	0	0	0	0	0	0	0	0
Construction/D&D	0	0	0	0	0	0	0	0	0	0
Operation	0	0	0	0	0	0	0	0	0	0
Total Percentage	0	0	0	0	0	0	0	0	0	0
Alt 2 Pretreatment Activity Base Costs($)										
Studies/Permitting	0	0	0	0	0	0	0	0	0	0
Design	0	0	0	0	0	0	0	0	0	0
Construction/D&D	0	0	0	0	0	0	0	0	0	0
Operation	0	0	0	0	0	0	0	0	0	0
Total Cost	0	0	0	0	0	0	0	0	0	0

ALTERNATIVE 2 PRETREATMENT BASE FTE BREAKDOWN	FY13	FY14	FY15	FY16	FY17	FY18	FY19	FY20	FY21	FY22
Contractor Base FTE per Alt 2 Pretreatment Activity (FTE)										
STUDIES/PERMITTING - Site Management/Operations	0.0	0.0	0.0	0.0	0.0	0.0	0.0	0.0	0.0	0.0
STUDIES/PERMITTING - Site Infrastructure	0.0	0.0	0.0	0.0	0.0	0.0	0.0	0.0	0.0	0.0
STUDIES/PERMITTING - National Laboratories	0.0	0.0	0.0	0.0	0.0	0.0	0.0	0.0	0.0	0.0
STUDIES/PERMITTING - Site Constructors	0.0	0.0	0.0	0.0	0.0	0.0	0.0	0.0	0.0	0.0
STUDIES/PERMITTING - Architecture/Engineering Contractors	0.0	0.0	0.0	0.0	0.0	0.0	0.0	0.0	0.0	0.0
STUDIES/PERMITTING - Construction Contractor	0.0	0.0	0.0	0.0	0.0	0.0	0.0	0.0	0.0	0.0
DESIGN - Site Management/Operations	0.0	0.0	0.0	0.0	0.0	0.0	0.0	0.0	0.0	0.0
DESIGN - Site Infrastructure	0.0	0.0	0.0	0.0	0.0	0.0	0.0	0.0	0.0	0.0
DESIGN - National Laboratories	0.0	0.0	0.0	0.0	0.0	0.0	0.0	0.0	0.0	0.0
DESIGN - Site Constructors	0.0	0.0	0.0	0.0	0.0	0.0	0.0	0.0	0.0	0.0
DESIGN - Architecture/Engineering Contractors	0.0	0.0	0.0	0.0	0.0	0.0	0.0	0.0	0.0	0.0
DESIGN - Construction Contractor	0.0	0.0	0.0	0.0	0.0	0.0	0.0	0.0	0.0	0.0
CONSTRUCTION/D&D - Site Management/Operations	0.0	0.0	0.0	0.0	0.0	0.0	0.0	0.0	0.0	0.0
CONSTRUCTION/D&D - Site Infrastructure	0.0	0.0	0.0	0.0	0.0	0.0	0.0	0.0	0.0	0.0
CONSTRUCTION/D&D - National Laboratories	0.0	0.0	0.0	0.0	0.0	0.0	0.0	0.0	0.0	0.0
CONSTRUCTION/D&D - Site Constructors	0.0	0.0	0.0	0.0	0.0	0.0	0.0	0.0	0.0	0.0
CONSTRUCTION/D&D - Architecture/Engineering Contractors	0.0	0.0	0.0	0.0	0.0	0.0	0.0	0.0	0.0	0.0
CONSTRUCTION/D&D - Construction Contractor	0.0	0.0	0.0	0.0	0.0	0.0	0.0	0.0	0.0	0.0
OPERATIONS - Site Management/Operations	0.0	0.0	0.0	0.0	0.0	0.0	0.0	0.0	0.0	0.0
OPERATIONS - Site Infrastructure	0.0	0.0	0.0	0.0	0.0	0.0	0.0	0.0	0.0	0.0
OPERATIONS - National Laboratories	0.0	0.0	0.0	0.0	0.0	0.0	0.0	0.0	0.0	0.0
OPERATIONS - Site Constructors	0.0	0.0	0.0	0.0	0.0	0.0	0.0	0.0	0.0	0.0
OPERATIONS - Architecture/Engineering Contractors	0.0	0.0	0.0	0.0	0.0	0.0	0.0	0.0	0.0	0.0
OPERATIONS - Construction Contractor	0.0	0.0	0.0	0.0	0.0	0.0	0.0	0.0	0.0	0.0

Worker Category Base FTE (FTE)	FY13	FY14	FY15	FY16	FY17	FY18	FY19	FY20	FY21	FY22
Engineer/Management	0.0	0.0	0.0	0.0	0.0	0.0	0.0	0.0	0.0	0.0
Crafts	0.0	0.0	0.0	0.0	0.0	0.0	0.0	0.0	0.0	0.0
Maintenance	0.0	0.0	0.0	0.0	0.0	0.0	0.0	0.0	0.0	0.0
Operators	0.0	0.0	0.0	0.0	0.0	0.0	0.0	0.0	0.0	0.0
Infrastructure	0.0	0.0	0.0	0.0	0.0	0.0	0.0	0.0	0.0	0.0
Total	0.0	0.0	0.0	0.0	0.0	0.0	0.0	0.0	0.0	0.0

FUNCTION - ALTERNATIVE 2 PRETREATMENT	FY23	FY24	FY25	FY26	FY27	FY28	FY29	FY30	FY31	FY32	FY33	FY34	FY35
Technology Development (Test) Cost	0	0	0	0	0	0	0	0	0	0	0	0	0
Operate LLW Pretreatment Mod 1 Facility First Year (Hot Test)	0	0	0	0	0	0	0	0	0	0	0	0	0
Operate LLW Pretreatment Mod 2 Facility First Year (Hot Test)	0	0	0	0	0	0	0	0	0	0	0	0	0
Prepare for Start Up In Tank Processing	0	0	0	0	0	0	0	0	0	0	0	0	0
Start-up In-Tank Processing	0	0	0	0	0	0	0	0	0	0	0	0	0
Start-up and Operate Pretreatment Pilot Testing	0	0	0	0	0	0	0	0	0	0	0	0	0
Continue Operation of Pilot Testing	0	0	0	0	0	0	0	0	0	0	0	0	0
Tank AZ-101 Sludge Test (PSW49XXX)	0	0	0	0	0	0	0	0	0	0	0	0	0
Prep LLW Pretreatment Mod 1 Facility For Start-up Phase 2 (Co	0	0	0	0	0	0	0	0	0	0	0	0	0
Prep LLW Pretreatment Mod 2 Facility For Start-up Phase 2 (Co	0	0	0	0	0	0	0	0	0	0	0	0	0
WESF Hot Cell Test (PDW211XX)	0	0	0	0	0	0	0	0	0	0	0	0	0
Operate HLW Pretreatment Facility - First Year (Hot Test)	0	0	0	0	0	0	0	0	0	0	0	0	0
Prepare HLW Pretreatment Facility for Start-up (Cold Test)	0	0	0	0	0	0	0	0	0	0	0	0	0
Subtotal Test Costs	0	0	0	0	0	0	0	0	0	0	0	0	0
Test Oversight Costs	0	0	0	0	0	0	0	0	0	0	0	0	0
Total Pretreatment Base Costs	0	0	0	0	0	0	0	0	0	0	0	0	0
Total Alt 2 Reddick Costs													
Pretreatment % of Total Alt 2 Reddick Costs													
Alt 2 Pretreatment Reddick Costs	0	0	0	0	0	0	0	0	0	0	0	0	0
Alt 2 Pretreatment Test Costs ($)	0	0	0	0	0	0	0	0	0	0	0	0	0

ALTERNATIVE 2 PRETREATMENT BASE COST BREAKDOWN	FY23	FY24	FY25	FY26	FY27	FY28	FY29	FY30	FY31	FY32	FY33	FY34	FY35
Activity % of Alt 2 Pretreatment Base Costs (%)													
Studies/Permitting	0	0	0	0	0	0	0	0	0	0	0	0	0
Design	0	0	0	0	0	0	0	0	0	0	0	0	0
Construction/D&D	0	0	0	0	0	0	0	0	0	0	0	0	0
Operation	0	0	0	0	0	0	0	0	0	0	0	0	0
Total Percentage	0	0	0	0	0	0	0	0	0	0	0	0	0
Alt 2 Pretreatment Activity Base Costs($)													
Studies/Permitting	0	0	0	0	0	0	0	0	0	0	0	0	0
Design	0	0	0	0	0	0	0	0	0	0	0	0	0
Construction/D&D	0	0	0	0	0	0	0	0	0	0	0	0	0
Operation	0	0	0	0	0	0	0	0	0	0	0	0	0
Total Cost	0	0	0	0	0	0	0	0	0	0	0	0	0

ALTERNATIVE 2 PRETREATMENT BASE FTE BREAKDOWN	FY23	FY24	FY25	FY26	FY27	FY28	FY29	FY30	FY31	FY32	FY33	FY34	FY35
Contractor Base FTE per Alt 2 Pretreatment Activity (FTE)													
STUDIES/PERMITTING - Site Management/Operations	0.0	0.0	0.0	0.0	0.0	0.0	0.0	0.0	0.0	0.0	0.0	0.0	0.0
STUDIES/PERMITTING - Site Infrastructure	0.0	0.0	0.0	0.0	0.0	0.0	0.0	0.0	0.0	0.0	0.0	0.0	0.0
STUDIES/PERMITTING - National Laboratories	0.0	0.0	0.0	0.0	0.0	0.0	0.0	0.0	0.0	0.0	0.0	0.0	0.0
STUDIES/PERMITTING - Site Constructors	0.0	0.0	0.0	0.0	0.0	0.0	0.0	0.0	0.0	0.0	0.0	0.0	0.0
STUDIES/PERMITTING - Architecture/Engineering Contractors	0.0	0.0	0.0	0.0	0.0	0.0	0.0	0.0	0.0	0.0	0.0	0.0	0.0
STUDIES/PERMITTING - Construction Contractor	0.0	0.0	0.0	0.0	0.0	0.0	0.0	0.0	0.0	0.0	0.0	0.0	0.0
DESIGN - Site Management/Operations	0.0	0.0	0.0	0.0	0.0	0.0	0.0	0.0	0.0	0.0	0.0	0.0	0.0
DESIGN - Site Infrastructure	0.0	0.0	0.0	0.0	0.0	0.0	0.0	0.0	0.0	0.0	0.0	0.0	0.0
DESIGN - National Laboratories	0.0	0.0	0.0	0.0	0.0	0.0	0.0	0.0	0.0	0.0	0.0	0.0	0.0
DESIGN - Site Constructors	0.0	0.0	0.0	0.0	0.0	0.0	0.0	0.0	0.0	0.0	0.0	0.0	0.0
DESIGN - Architecture/Engineering Contractors	0.0	0.0	0.0	0.0	0.0	0.0	0.0	0.0	0.0	0.0	0.0	0.0	0.0
DESIGN - Construction Contractor	0.0	0.0	0.0	0.0	0.0	0.0	0.0	0.0	0.0	0.0	0.0	0.0	0.0
CONSTRUCTION/D&D - Site Management/Operations	0.0	0.0	0.0	0.0	0.0	0.0	0.0	0.0	0.0	0.0	0.0	0.0	0.0
CONSTRUCTION/D&D - Site Infrastructure	0.0	0.0	0.0	0.0	0.0	0.0	0.0	0.0	0.0	0.0	0.0	0.0	0.0
CONSTRUCTION/D&D - National Laboratories	0.0	0.0	0.0	0.0	0.0	0.0	0.0	0.0	0.0	0.0	0.0	0.0	0.0
CONSTRUCTION/D&D - Site Constructors	0.0	0.0	0.0	0.0	0.0	0.0	0.0	0.0	0.0	0.0	0.0	0.0	0.0
CONSTRUCTION/D&D - Architecture/Engineering Contractors	0.0	0.0	0.0	0.0	0.0	0.0	0.0	0.0	0.0	0.0	0.0	0.0	0.0
CONSTRUCTION/D&D - Construction Contractor	0.0	0.0	0.0	0.0	0.0	0.0	0.0	0.0	0.0	0.0	0.0	0.0	0.0
OPERATIONS - Site Management/Operations	0.0	0.0	0.0	0.0	0.0	0.0	0.0	0.0	0.0	0.0	0.0	0.0	0.0
OPERATIONS - Site Infrastructure	0.0	0.0	0.0	0.0	0.0	0.0	0.0	0.0	0.0	0.0	0.0	0.0	0.0
OPERATIONS - National Laboratories	0.0	0.0	0.0	0.0	0.0	0.0	0.0	0.0	0.0	0.0	0.0	0.0	0.0
OPERATIONS - Site Constructors	0.0	0.0	0.0	0.0	0.0	0.0	0.0	0.0	0.0	0.0	0.0	0.0	0.0
OPERATIONS - Architecture/Engineering Contractors	0.0	0.0	0.0	0.0	0.0	0.0	0.0	0.0	0.0	0.0	0.0	0.0	0.0
OPERATIONS - Construction Contractor	0.0	0.0	0.0	0.0	0.0	0.0	0.0	0.0	0.0	0.0	0.0	0.0	0.0

Worker Category Base FTE (FTE)	FY23	FY24	FY25	FY26	FY27	FY28	FY29	FY30	FY31	FY32	FY33	FY34	FY35
Engineer/Management	0.0	0.0	0.0	0.0	0.0	0.0	0.0	0.0	0.0	0.0	0.0	0.0	0.0
Crafts	0.0	0.0	0.0	0.0	0.0	0.0	0.0	0.0	0.0	0.0	0.0	0.0	0.0
Maintenance	0.0	0.0	0.0	0.0	0.0	0.0	0.0	0.0	0.0	0.0	0.0	0.0	0.0
Operators	0.0	0.0	0.0	0.0	0.0	0.0	0.0	0.0	0.0	0.0	0.0	0.0	0.0
Infrastructure	0.0	0.0	0.0	0.0	0.0	0.0	0.0	0.0	0.0	0.0	0.0	0.0	0.0
Total	0.0	0.0	0.0	0.0	0.0	0.0	0.0	0.0	0.0	0.0	0.0	0.0	0.0

FUNCTION - ALTERNATIVE 2 PRETREATMENT	FY36	FY37	FY38	FY39	FY40	Totals
Technology Development (Test) Cost	0	0	0	0	0	83,418,029
Operate LLW Pretreatment Mod 1 Facility First Year (Hot Test)	0	0	0	0	0	51,315,328
Operate LLW Pretreatment Mod 2 Facility First Year (Hot Test)	0	0	0	0	0	27,009,241
Prepare for Start Up In Tank Processing	0	0	0	0	0	14,893,112
Start-up In-Tank Processing	0	0	0	0	0	24,439,379
Start-up and Operate Pretreatment Pilot Testing	0	0	0	0	0	26,403,681
Continue Operation of Pilot Testing	0	0	0	0	0	26,384,980
Tank AZ-101 Sludge Test (PSW49XXX)	0	0	0	0	0	
Prep LLW Pretreatment Mod 1 Facility For Start-up Phase 2 (Co	0	0	0	0	0	
Prep LLW Pretreatment Mod 2 Facility For Start-up Phase 2 (Co	0	0	0	0	0	
WESF Hot Cell Test (PDW211XX)	0	0	0	0	0	
Operate HLW Pretreatment Facility - First Year (Hot Test)	0	0	0	0	0	
Prepare HLW Pretreatment Facility for Start-up (Cold Test)	0	0	0	0	0	
Subtotal Test Costs	0	0	0	0	0	348,214,791
Test Oversight Costs	0	0	0	0	0	34,821,479
Total Pretreatment Base Costs	0	0	0	0	0	383,036,270
Total Alt 2 Reddick Costs						978,000,000
Pretreatment % of Total Alt 2 Reddick Costs						592
Alt 2 Pretreatment Reddick Costs	0	0	0	0	0	361,860,000
Alt 2 Pretreatment Test Costs ($)	0	0	0	0	0	744,896,270

ALTERNATIVE 2 PRETREATMENT BASE COST BREAKDOWN	FY36	FY37	FY38	FY39	FY40	
Activity % of Alt 2 Pretreatment Base Costs (%)						
Studies/Permitting	0	0	0	0	0	
Design	0	0	0	0	0	
Construction/D&D	0	0	0	0	0	
Operation	0	0	0	0	0	
Total Percentage	0	0	0	0	0	
						Totals
Alt 2 Pretreatment Activity Base Costs($)						
Studies/Permitting	0	0	0	0	0	45,916,897
Design	0	0	0	0	0	11,618,715
Construction/D&D	0	0	0	0	0	32,663,317
Operation	0	0	0	0	0	292,837,342
Total Cost	0	0	0	0	0	383,036,270

ALTERNATIVE 2 PRETREATMENT BASE FTE BREAKDOWN	FY36	FY37	FY38	FY39	FY40	Totals
Contractor Base FTE per Alt 2 Pretreatment Activity (FTE)						
STUDIES/PERMITTING - Site Management/Operations	0.0	0.0	0.0	0.0	0.0	209.1
STUDIES/PERMITTING - Site Infrastructure	0.0	0.0	0.0	0.0	0.0	36.9
STUDIES/PERMITTING - National Laboratories	0.0	0.0	0.0	0.0	0.0	61.6
STUDIES/PERMITTING - Site Constructors	0.0	0.0	0.0	0.0	0.0	0.0
STUDIES/PERMITTING - Architecture/Engineering Contractors	0.0	0.0	0.0	0.0	0.0	0.0
STUDIES/PERMITTING - Construction Contractor	0.0	0.0	0.0	0.0	0.0	0.0
DESIGN - Site Management/Operations	0.0	0.0	0.0	0.0	0.0	7.1
DESIGN - Site Infrastructure	0.0	0.0	0.0	0.0	0.0	1.2
DESIGN - National Laboratories	0.0	0.0	0.0	0.0	0.0	6.2
DESIGN - Site Constructors	0.0	0.0	0.0	0.0	0.0	4.1
DESIGN - Architecture/Engineering Contractors	0.0	0.0	0.0	0.0	0.0	48.4
DESIGN - Construction Contractor	0.0	0.0	0.0	0.0	0.0	0.0
CONSTRUCTION/D&D - Site Management/Operations	0.0	0.0	0.0	0.0	0.0	9.9
CONSTRUCTION/D&D - Site Infrastructure	0.0	0.0	0.0	0.0	0.0	1.7
CONSTRUCTION/D&D - National Laboratories	0.0	0.0	0.0	0.0	0.0	8.8
CONSTRUCTION/D&D - Site Constructors	0.0	0.0	0.0	0.0	0.0	11.7
CONSTRUCTION/D&D - Architecture/Engineering Contractors	0.0	0.0	0.0	0.0	0.0	9.1
CONSTRUCTION/D&D - Construction Contractor	0.0	0.0	0.0	0.0	0.0	192.1
OPERATIONS - Site Management/Operations	0.0	0.0	0.0	0.0	0.0	977.9
OPERATIONS - Site Infrastructure	0.0	0.0	0.0	0.0	0.0	172.6
OPERATIONS - National Laboratories	0.0	0.0	0.0	0.0	0.0	392.9
OPERATIONS - Site Constructors	0.0	0.0	0.0	0.0	0.0	0.0
OPERATIONS - Architecture/Engineering Contractors	0.0	0.0	0.0	0.0	0.0	0.0
OPERATIONS - Construction Contractor	0.0	0.0	0.0	0.0	0.0	0.0

Worker Category Base FTE (FTE)	FY36	FY37	FY38	FY39	FY40	Totals
Engineer/Management	0.0	0.0	0.0	0.0	0.0	686.2
Crafts	0.0	0.0	0.0	0.0	0.0	156.0
Maintenance	0.0	0.0	0.0	0.0	0.0	411.2
Operators	0.0	0.0	0.0	0.0	0.0	685.4
Infrastructure	0.0	0.0	0.0	0.0	0.0	212.5
Total	0.0	0.0	0.0	0.0	0.0	2,151.3

ALTERNATIVE 2 PRETREATMENT REDDICK COST BREAKDOWN	FY95	FY96	FY97	FY98	FY99	FY00
Activity % of Alt 2 Pretreatment Reddick Costs (%)						
Studies/Permitting	100	100	100	10	10	10
Design	0	0	0	90	90	90
Construction/D&D	0	0	0	0	0	0
Operation	0	0	0	0	0	0
Total Percentage	100	100	100	100	100	100
Alt 2 Pretreatment Activity Reddick Costs($)						
Studies/Permitting	740,000	740,000	2,220,000	370,000	1,406,000	1,406,000
Design	0	0	0	3,330,000	12,654,000	12,654,000
Construction/D&D	0	0	0	0	0	0
Operation	0	0	0	0	0	0
Total Cost	740,000	740,000	2,220,000	3,700,000	14,060,000	14,060,000

ALTERNATIVE 2 PRETREATMENT REDDICK FTE BREAKDOWN	FY95	FY96	FY97	FY98	FY99	FY00
Contractor Reddick FTE per Alt 2 Pretreatment Activity (FTE)						
STUDIES/PERMITTING - Site Management/Operations	4.3	4.3	12.8	2.1	8.1	8.1
STUDIES/PERMITTING - Site Infrastructure	0.8	0.8	2.3	0.4	1.4	1.4
STUDIES/PERMITTING - National Laboratories	0.2	0.2	0.6	0.1	0.4	0.4
STUDIES/PERMITTING - Site Constructors	0.0	0.0	0.0	0.0	0.0	0.0
STUDIES/PERMITTING - Architecture/Engineering Contract	0.0	0.0	0.0	0.0	0.0	0.0
STUDIES/PERMITTING - Construction Contractor	0.0	0.0	0.0	0.0	0.0	0.0
DESIGN - Site Management/Operations	0.0	0.0	0.0	2.0	7.7	7.7
DESIGN - Site Infrastructure	0.0	0.0	0.0	0.4	1.4	1.4
DESIGN - National Laboratories	0.0	0.0	0.0	1.8	6.8	6.8
DESIGN - Site Constructors	0.0	0.0	0.0	1.2	4.5	4.5
DESIGN - Architecture/Engineering Contractors	0.0	0.0	0.0	13.9	52.7	52.7
DESIGN - Construction Contractor	0.0	0.0	0.0	0.0	0.0	0.0
CONSTRUCTION/D&D - Site Management/Operations	0.0	0.0	0.0	0.0	0.0	0.0
CONSTRUCTION/D&D - Site Infrastructure	0.0	0.0	0.0	0.0	0.0	0.0
CONSTRUCTION/D&D - National Laboratories	0.0	0.0	0.0	0.0	0.0	0.0
CONSTRUCTION/D&D - Site Constructors	0.0	0.0	0.0	0.0	0.0	0.0
CONSTRUCTION/D&D - Architecture/Engineering Contracto	0.0	0.0	0.0	0.0	0.0	0.0
CONSTRUCTION/D&D - Construction Contractor	0.0	0.0	0.0	0.0	0.0	0.0
OPERATIONS - Site Management/Operations	0.0	0.0	0.0	0.0	0.0	0.0
OPERATIONS - Site Infrastructure	0.0	0.0	0.0	0.0	0.0	0.0
OPERATIONS - National Laboratories	0.0	0.0	0.0	0.0	0.0	0.0
OPERATIONS - Site Constructors	0.0	0.0	0.0	0.0	0.0	0.0
OPERATIONS - Architecture/Engineering Contractors	0.0	0.0	0.0	0.0	0.0	0.0
OPERATIONS - Construction Contractor	0.0	0.0	0.0	0.0	0.0	0.0
Worker Category Reddick FTE (FTE)						
Engineer/Management	4.5	4.5	13.4	21.1	80.2	80.2
Crafts	0.0	0.0	0.0	0.0	0.0	0.0
Maintenance	0.0	0.0	0.0	0.0	0.0	0.0
Operators	0.0	0.0	0.0	0.0	0.0	0.0
Infrastructure	0.8	0.8	2.3	0.7	2.8	2.8
Total	5.2	5.2	15.7	21.8	83.0	83.0

ALTERNATIVE 2 PRETREATMENT COST SUMMARY	FY95	FY96	FY97	FY98	FY99	FY00
Studies/Permitting	7,470,034	6,939,321	8,730,822	5,989,315	6,067,289	4,976,054
Design	1,682,508	1,549,830	1,627,705	6,139,657	14,207,763	13,844,018
Construction/D&D	8,412,542	7,749,152	8,138,527	5,619,315	1,553,763	1,190,018
Operation	16,825,084	15,498,304	16,277,054	42,144,859	23,306,446	17,850,269
Total	34,390,168	31,736,607	34,774,108	59,893,146	45,135,261	37,860,359

ALTERNATIVE 2 PRETREATMENT FTE SUMMARY	FY95	FY96	FY97	FY98	FY99	FY00
Engineer/Management	88.9	82.2	95.1	122.6	141.9	127.5
Crafts	40.2	37.0	38.9	26.8	7.4	5.7
Maintenance	23.6	21.8	22.9	59.2	32.7	25.1
Operators	39.4	36.3	38.1	98.6	54.5	41.8
Infrastructure	16.7	15.4	17.7	30.7	20.5	16.4
Total	208.8	192.7	212.6	338.0	257.1	216.4

ALTERNATIVE 2 PRETREATMENT REDDICK COST BREAKDOWN	FY01	FY02	FY03	FY04	FY05
Activity % of Alt 2 Pretreatment Reddick Costs (%)					
Studies/Permitting	10	0	0	0	0
Design	40	0	0	0	0
Construction/D&D	50	100	70	70	50
Operation	0	0	30	30	50
Total Percentage	100	100	100	100	100
Alt 2 Pretreatment Activity Reddick Costs($)					
Studies/Permitting	1,443,000	0	0	0	0
Design	5,772,000	0	0	0	0
Construction/D&D	7,215,000	28,120,000	26,159,000	27,454,000	22,200,000
Operation	0	0	11,211,000	11,766,000	22,200,000
Total Cost	14,430,000	28,120,000	37,370,000	39,220,000	44,400,000

ALTERNATIVE 2 PRETREATMENT REDDICK FTE BREAKDOWN	FY01	FY02	FY03	FY04	FY05
Contractor Reddick FTE per Alt 2 Pretreatment Activity (FTE)					
STUDIES/PERMITTING - Site Management/Operations	8.3	0.0	0.0	0.0	0.0
STUDIES/PERMITTING - Site Infrastructure	1.5	0.0	0.0	0.0	0.0
STUDIES/PERMITTING - National Laboratories	0.4	0.0	0.0	0.0	0.0
STUDIES/PERMITTING - Site Constructors	0.0	0.0	0.0	0.0	0.0
STUDIES/PERMITTING - Architecture/Engineering Contract	0.0	0.0	0.0	0.0	0.0
STUDIES/PERMITTING - Construction Contractor	0.0	0.0	0.0	0.0	0.0
DESIGN - Site Management/Operations	3.5	0.0	0.0	0.0	0.0
DESIGN - Site Infrastructure	0.6	0.0	0.0	0.0	0.0
DESIGN - National Laboratories	3.1	0.0	0.0	0.0	0.0
DESIGN - Site Constructors	2.1	0.0	0.0	0.0	0.0
DESIGN - Architecture/Engineering Contractors	24.1	0.0	0.0	0.0	0.0
DESIGN - Construction Contractor	0.0	0.0	0.0	0.0	0.0
CONSTRUCTION/D&D - Site Management/Operations	4.4	17.1	15.9	16.7	13.5
CONSTRUCTION/D&D - Site Infrastructure	0.8	3.0	2.8	2.9	2.4
CONSTRUCTION/D&D - National Laboratories	0.0	0.0	0.0	0.0	0.0
CONSTRUCTION/D&D - Site Constructors	2.6	10.0	9.3	9.8	7.9
CONSTRUCTION/D&D - Architecture/Engineering Contracto	2.0	7.8	7.3	7.6	6.2
CONSTRUCTION/D&D - Construction Contractor	42.4	165.4	153.9	161.5	130.6
OPERATIONS - Site Management/Operations	0.0	0.0	47.6	50.0	94.4
OPERATIONS - Site Infrastructure	0.0	0.0	8.4	8.8	16.7
OPERATIONS - National Laboratories	0.0	0.0	6.0	6.3	11.9
OPERATIONS - Site Constructors	0.0	0.0	0.0	0.0	0.0
OPERATIONS - Architecture/Engineering Contractors	0.0	0.0	0.0	0.0	0.0
OPERATIONS - Construction Contractor	0.0	0.0	0.0	0.0	0.0
Worker Category Reddick FTE (FTE)					
Engineer/Management	58.4	66.0	72.1	75.7	73.4
Crafts	34.5	134.3	125.0	131.2	106.1
Maintenance	0.0	0.0	16.1	16.9	31.9
Operators	0.0	0.0	26.8	28.2	53.1
Infrastructure	2.9	3.0	11.2	11.8	19.0
Total	95.7	203.4	251.2	263.7	283.5

ALTERNATIVE 2 PRETREATMENT COST SUMMARY	FY01	FY02	FY03	FY04	FY05
Studies/Permitting	5,058,697	784,498	503,384	1,666,652	3,335,628
Design	6,977,232	0	0	0	0
Construction/D&D	7,215,000	28,120,000	26,159,000	27,454,000	22,200,000
Operation	19,283,716	7,060,478	15,741,459	26,765,867	85,576,940
Total	38,534,645	35,964,976	42,403,843	55,886,519	111,112,568

ALTERNATIVE 2 PRETREATMENT FTE SUMMARY	FY01	FY02	FY03	FY04	FY05
Engineer/Management	104.6	77.2	79.3	89.6	152.4
Crafts	34.5	134.3	125.0	131.2	106.1
Maintenance	27.1	9.9	22.5	38.0	120.9
Operators	45.1	16.5	37.4	63.3	201.5
Infrastructure	17.3	7.8	14.3	21.9	59.1
Total	228.5	245.8	278.5	353.9	639.8

ALTERNATIVE 2 PRETREATMENT REDDICK COST BREAKDOWN	FY06	FY07	FY08	FY09	FY10
Activity % of Alt 2 Pretreatment Reddick Costs (%)					
Studies/Permitting	0	0	0	0	0
Design	0	0	0	0	0
Construction/D&D	0	0	0	0	0
Operation	100	100	100	100	100
Total Percentage	**100**	**100**	**100**	**100**	**100**
Alt 2 Pretreatment Activity Reddick Costs($)					
Studies/Permitting	0	0	0	0	0
Design	0	0	0	0	0
Construction/D&D	0	0	0	0	0
Operation	29,600,000	35,150,000	35,150,000	31,450,000	31,450,000
Total Cost	**29,600,000**	**35,150,000**	**35,150,000**	**31,450,000**	**31,450,000**

ALTERNATIVE 2 PRETREATMENT REDDICK FTE BREAKDOWN	FY06	FY07	FY08	FY09	FY10
Contractor Reddick FTE per Alt 2 Pretreatment Activity (FTE)					
STUDIES/PERMITTING - Site Management/Operations	0.0	0.0	0.0	0.0	0.0
STUDIES/PERMITTING - Site Infrastructure	0.0	0.0	0.0	0.0	0.0
STUDIES/PERMITTING - National Laboratories	0.0	0.0	0.0	0.0	0.0
STUDIES/PERMITTING - Site Constructors	0.0	0.0	0.0	0.0	0.0
STUDIES/PERMITTING - Architecture/Engineering Contract	0.0	0.0	0.0	0.0	0.0
STUDIES/PERMITTING - Construction Contractor	0.0	0.0	0.0	0.0	0.0
DESIGN - Site Management/Operations	0.0	0.0	0.0	0.0	0.0
DESIGN - Site Infrastructure	0.0	0.0	0.0	0.0	0.0
DESIGN - National Laboratories	0.0	0.0	0.0	0.0	0.0
DESIGN - Site Constructors	0.0	0.0	0.0	0.0	0.0
DESIGN - Architecture/Engineering Contractors	0.0	0.0	0.0	0.0	0.0
DESIGN - Construction Contractor	0.0	0.0	0.0	0.0	0.0
CONSTRUCTION/D&D - Site Management/Operations	0.0	0.0	0.0	0.0	0.0
CONSTRUCTION/D&D - Site Infrastructure	0.0	0.0	0.0	0.0	0.0
CONSTRUCTION/D&D - National Laboratories	0.0	0.0	0.0	0.0	0.0
CONSTRUCTION/D&D - Site Constructors	0.0	0.0	0.0	0.0	0.0
CONSTRUCTION/D&D - Architecture/Engineering Contracto	0.0	0.0	0.0	0.0	0.0
CONSTRUCTION/D&D - Construction Contractor	0.0	0.0	0.0	0.0	0.0
OPERATIONS - Site Management/Operations	125.8	149.4	149.4	133.7	133.7
OPERATIONS - Site Infrastructure	22.2	26.4	26.4	23.6	23.6
OPERATIONS - National Laboratories	15.9	18.9	18.9	16.9	16.9
OPERATIONS - Site Constructors	0.0	0.0	0.0	0.0	0.0
OPERATIONS - Architecture/Engineering Contractors	0.0	0.0	0.0	0.0	0.0
OPERATIONS - Construction Contractor	0.0	0.0	0.0	0.0	0.0
Worker Category Reddick FTE (FTE)					
Engineer/Management	28.3	33.6	33.6	30.1	30.1
Crafts	0.0	0.0	0.0	0.0	0.0
Maintenance	42.5	50.5	50.5	45.2	45.2
Operators	70.8	84.1	84.1	75.3	75.3
Infrastructure	22.2	26.4	26.4	23.6	23.6
Total	**163.9**	**194.6**	**194.6**	**174.1**	**174.1**

ALTERNATIVE 2 PRETREATMENT COST SUMMARY	FY06	FY07	FY08	FY09	FY10
Studies/Permitting	2,129,508	420,842	169,853	0	0
Design	0	0	0	0	0
Construction/D&D	0	0	0	0	0
Operation	70,060,659	43,146,000	38,377,207	31,450,000	31,450,000
Total	72,190,167	43,566,843	38,547,060	31,450,000	31,450,000

ALTERNATIVE 2 PRETREATMENT FTE SUMMARY	FY06	FY07	FY08	FY09	FY10
Engineer/Management	78.8	43.6	37.7	30.1	30.1
Crafts	0.0	0.0	0.0	0.0	0.0
Maintenance	99.3	61.7	55.0	45.2	45.2
Operators	165.5	102.8	91.7	75.3	75.3
Infrastructure	47.8	31.4	28.4	23.6	23.6
Total	391.4	239.6	212.8	174.1	174.1

ALTERNATIVE 2 PRETREATMENT REDDICK COST BREAKDOWN	FY11	FY12	FY13	FY14	FY15	FY16	FY17
Activity % of Alt 2 Pretreatment Reddick Costs (%)							
Studies/Permitting	0	0	0	0	0	0	0
Design	0	0	0	0	0	0	0
Construction/D&D	0	0	0	0	0	0	0
Operation	0	0	0	0	0	0	0
Total Percentage	0	0	0	0	0	0	0
Alt 2 Pretreatment Activity Reddick Costs($)							
Studies/Permitting	0	0	0	0	0	0	0
Design	0	0	0	0	0	0	0
Construction/D&D	0	0	0	0	0	0	0
Operation	0	0	0	0	0	0	0
Total Cost	0	0	0	0	0	0	0

ALTERNATIVE 2 PRETREATMENT REDDICK FTE BREAKDOWN	FY11	FY12	FY13	FY14	FY15	FY16	FY17
Contractor Reddick FTE per Alt 2 Pretreatment Activity (FTE)							
STUDIES/PERMITTING - Site Management/Operations	0.0	0.0	0.0	0.0	0.0	0.0	0.0
STUDIES/PERMITTING - Site Infrastructure	0.0	0.0	0.0	0.0	0.0	0.0	0.0
STUDIES/PERMITTING - National Laboratories	0.0	0.0	0.0	0.0	0.0	0.0	0.0
STUDIES/PERMITTING - Site Constructors	0.0	0.0	0.0	0.0	0.0	0.0	0.0
STUDIES/PERMITTING - Architecture/Engineering Contract	0.0	0.0	0.0	0.0	0.0	0.0	0.0
STUDIES/PERMITTING - Construction Contractor	0.0	0.0	0.0	0.0	0.0	0.0	0.0
DESIGN - Site Management/Operations	0.0	0.0	0.0	0.0	0.0	0.0	0.0
DESIGN - Site Infrastructure	0.0	0.0	0.0	0.0	0.0	0.0	0.0
DESIGN - National Laboratories	0.0	0.0	0.0	0.0	0.0	0.0	0.0
DESIGN - Site Constructors	0.0	0.0	0.0	0.0	0.0	0.0	0.0
DESIGN - Architecture/Engineering Contractors	0.0	0.0	0.0	0.0	0.0	0.0	0.0
DESIGN - Construction Contractor	0.0	0.0	0.0	0.0	0.0	0.0	0.0
CONSTRUCTION/D&D - Site Management/Operations	0.0	0.0	0.0	0.0	0.0	0.0	0.0
CONSTRUCTION/D&D - Site Infrastructure	0.0	0.0	0.0	0.0	0.0	0.0	0.0
CONSTRUCTION/D&D - National Laboratories	0.0	0.0	0.0	0.0	0.0	0.0	0.0
CONSTRUCTION/D&D - Site Constructors	0.0	0.0	0.0	0.0	0.0	0.0	0.0
CONSTRUCTION/D&D - Architecture/Engineering Contracto	0.0	0.0	0.0	0.0	0.0	0.0	0.0
CONSTRUCTION/D&D - Construction Contractor	0.0	0.0	0.0	0.0	0.0	0.0	0.0
OPERATIONS - Site Management/Operations	0.0	0.0	0.0	0.0	0.0	0.0	0.0
OPERATIONS - Site Infrastructure	0.0	0.0	0.0	0.0	0.0	0.0	0.0
OPERATIONS - National Laboratories	0.0	0.0	0.0	0.0	0.0	0.0	0.0
OPERATIONS - Site Constructors	0.0	0.0	0.0	0.0	0.0	0.0	0.0
OPERATIONS - Architecture/Engineering Contractors	0.0	0.0	0.0	0.0	0.0	0.0	0.0
OPERATIONS - Construction Contractor	0.0	0.0	0.0	0.0	0.0	0.0	0.0
Worker Category Reddick FTE (FTE)							
Engineer/Management	0.0	0.0	0.0	0.0	0.0	0.0	0.0
Crafts	0.0	0.0	0.0	0.0	0.0	0.0	0.0
Maintenance	0.0	0.0	0.0	0.0	0.0	0.0	0.0
Operators	0.0	0.0	0.0	0.0	0.0	0.0	0.0
Infrastructure	0.0	0.0	0.0	0.0	0.0	0.0	0.0
Total	0.0	0.0	0.0	0.0	0.0	0.0	0.0

ALTERNATIVE 2 PRETREATMENT COST SUMMARY	FY11	FY12	FY13	FY14	FY15	FY16	FY17
Studies/Permitting	0	0	0	0	0	0	0
Design	0	0	0	0	0	0	0
Construction/D&D	0	0	0	0	0	0	0
Operation	0	0	0	0	0	0	0
Total	0	0	0	0	0	0	0

ALTERNATIVE 2 PRETREATMENT FTE SUMMARY	FY11	FY12	FY13	FY14	FY15	FY16	FY17
Engineer/Management	0.0	0.0	0.0	0.0	0.0	0.0	0.0
Crafts	0.0	0.0	0.0	0.0	0.0	0.0	0.0
Maintenance	0.0	0.0	0.0	0.0	0.0	0.0	0.0
Operators	0.0	0.0	0.0	0.0	0.0	0.0	0.0
Infrastructure	0.0	0.0	0.0	0.0	0.0	0.0	0.0
Total	0.0	0.0	0.0	0.0	0.0	0.0	0.0

ALTERNATIVE 2 PRETREATMENT REDDICK COST BREAKDOWN	FY18	FY19	FY20	FY21	FY22	FY23	FY24	FY25	FY26	FY27	FY28	FY29
Activity % of Alt 2 Pretreatment Reddick Costs (%)												
Studies/Permitting	0	0	0	0	0	0	0	0	0	0	0	0
Design	0	0	0	0	0	0	0	0	0	0	0	0
Construction/D&D	0	0	0	0	0	0	0	0	0	0	0	0
Operation	0	0	0	0	0	0	0	0	0	0	0	0
Total Percentage	0	0	0	0	0	0	0	0	0	0	0	0
Alt 2 Pretreatment Activity Reddick Costs($)												
Studies/Permitting	0	0	0	0	0	0	0	0	0	0	0	0
Design	0	0	0	0	0	0	0	0	0	0	0	0
Construction/D&D	0	0	0	0	0	0	0	0	0	0	0	0
Operation	0	0	0	0	0	0	0	0	0	0	0	0
Total Cost	0	0	0	0	0	0	0	0	0	0	0	0

ALTERNATIVE 2 PRETREATMENT REDDICK FTE BREAKDOWN	FY18	FY19	FY20	FY21	FY22	FY23	FY24	FY25	FY26	FY27	FY28	FY29
Contractor Reddick FTE per Alt 2 Pretreatment Activity (FTE)												
STUDIES/PERMITTING - Site Management/Operations	0.0	0.0	0.0	0.0	0.0	0.0	0.0	0.0	0.0	0.0	0.0	0.0
STUDIES/PERMITTING - Site Infrastructure	0.0	0.0	0.0	0.0	0.0	0.0	0.0	0.0	0.0	0.0	0.0	0.0
STUDIES/PERMITTING - National Laboratories	0.0	0.0	0.0	0.0	0.0	0.0	0.0	0.0	0.0	0.0	0.0	0.0
STUDIES/PERMITTING - Site Constructors	0.0	0.0	0.0	0.0	0.0	0.0	0.0	0.0	0.0	0.0	0.0	0.0
STUDIES/PERMITTING - Architecture/Engineering Contract	0.0	0.0	0.0	0.0	0.0	0.0	0.0	0.0	0.0	0.0	0.0	0.0
STUDIES/PERMITTING - Construction Contractor	0.0	0.0	0.0	0.0	0.0	0.0	0.0	0.0	0.0	0.0	0.0	0.0
DESIGN - Site Management/Operations	0.0	0.0	0.0	0.0	0.0	0.0	0.0	0.0	0.0	0.0	0.0	0.0
DESIGN - Site Infrastructure	0.0	0.0	0.0	0.0	0.0	0.0	0.0	0.0	0.0	0.0	0.0	0.0
DESIGN - National Laboratories	0.0	0.0	0.0	0.0	0.0	0.0	0.0	0.0	0.0	0.0	0.0	0.0
DESIGN - Site Constructors	0.0	0.0	0.0	0.0	0.0	0.0	0.0	0.0	0.0	0.0	0.0	0.0
DESIGN - Architecture/Engineering Contractors	0.0	0.0	0.0	0.0	0.0	0.0	0.0	0.0	0.0	0.0	0.0	0.0
DESIGN - Construction Contractor	0.0	0.0	0.0	0.0	0.0	0.0	0.0	0.0	0.0	0.0	0.0	0.0
CONSTRUCTION/D&D - Site Management/Operations	0.0	0.0	0.0	0.0	0.0	0.0	0.0	0.0	0.0	0.0	0.0	0.0
CONSTRUCTION/D&D - Site Infrastructure	0.0	0.0	0.0	0.0	0.0	0.0	0.0	0.0	0.0	0.0	0.0	0.0
CONSTRUCTION/D&D - National Laboratories	0.0	0.0	0.0	0.0	0.0	0.0	0.0	0.0	0.0	0.0	0.0	0.0
CONSTRUCTION/D&D - Site Constructors	0.0	0.0	0.0	0.0	0.0	0.0	0.0	0.0	0.0	0.0	0.0	0.0
CONSTRUCTION/D&D - Architecture/Engineering Contracto	0.0	0.0	0.0	0.0	0.0	0.0	0.0	0.0	0.0	0.0	0.0	0.0
CONSTRUCTION/D&D - Construction Contractor	0.0	0.0	0.0	0.0	0.0	0.0	0.0	0.0	0.0	0.0	0.0	0.0
OPERATIONS - Site Management/Operations	0.0	0.0	0.0	0.0	0.0	0.0	0.0	0.0	0.0	0.0	0.0	0.0
OPERATIONS - Site Infrastructure	0.0	0.0	0.0	0.0	0.0	0.0	0.0	0.0	0.0	0.0	0.0	0.0
OPERATIONS - National Laboratories	0.0	0.0	0.0	0.0	0.0	0.0	0.0	0.0	0.0	0.0	0.0	0.0
OPERATIONS - Site Constructors	0.0	0.0	0.0	0.0	0.0	0.0	0.0	0.0	0.0	0.0	0.0	0.0
OPERATIONS - Architecture/Engineering Contractors	0.0	0.0	0.0	0.0	0.0	0.0	0.0	0.0	0.0	0.0	0.0	0.0
OPERATIONS - Construction Contractor	0.0	0.0	0.0	0.0	0.0	0.0	0.0	0.0	0.0	0.0	0.0	0.0
Worker Category Reddick FTE (FTE)												
Engineer/Management	0.0	0.0	0.0	0.0	0.0	0.0	0.0	0.0	0.0	0.0	0.0	0.0
Crafts	0.0	0.0	0.0	0.0	0.0	0.0	0.0	0.0	0.0	0.0	0.0	0.0
Maintenance	0.0	0.0	0.0	0.0	0.0	0.0	0.0	0.0	0.0	0.0	0.0	0.0
Operators	0.0	0.0	0.0	0.0	0.0	0.0	0.0	0.0	0.0	0.0	0.0	0.0
Infrastructure	0.0	0.0	0.0	0.0	0.0	0.0	0.0	0.0	0.0	0.0	0.0	0.0
Total	0.0	0.0	0.0	0.0	0.0	0.0	0.0	0.0	0.0	0.0	0.0	0.0

ALTERNATIVE 2 PRETREATMENT COST SUMMARY	FY18	FY19	FY20	FY21	FY22	FY23	FY24	FY25	FY26	FY27	FY28	FY29
Studies/Permitting	0	0	0	0	0	0	0	0	0	0	0	0
Design	0	0	0	0	0	0	0	0	0	0	0	0
Construction/D&D	0	0	0	0	0	0	0	0	0	0	0	0
Operation	0	0	0	0	0	0	0	0	0	0	0	0
Total	0	0	0	0	0	0	0	0	0	0	0	0

ALTERNATIVE 2 PRETREATMENT FTE SUMMARY	FY18	FY19	FY20	FY21	FY22	FY23	FY24	FY25	FY26	FY27	FY28	FY29
Engineer/Management	0.0	0.0	0.0	0.0	0.0	0.0	0.0	0.0	0.0	0.0	0.0	0.0
Crafts	0.0	0.0	0.0	0.0	0.0	0.0	0.0	0.0	0.0	0.0	0.0	0.0
Maintenance	0.0	0.0	0.0	0.0	0.0	0.0	0.0	0.0	0.0	0.0	0.0	0.0
Operators	0.0	0.0	0.0	0.0	0.0	0.0	0.0	0.0	0.0	0.0	0.0	0.0
Infrastructure	0.0	0.0	0.0	0.0	0.0	0.0	0.0	0.0	0.0	0.0	0.0	0.0
Total	0.0	0.0	0.0	0.0	0.0	0.0	0.0	0.0	0.0	0.0	0.0	0.0

ALTERNATIVE 2 PRETREATMENT REDDICK COST BREAKDOWN	FY30	FY31	FY32	FY33	FY34	FY35	FY36	FY37	FY38	FY39	FY40
Activity % of Alt 2 Pretreatment Reddick Costs (%)											
Studies/Permitting	0	0	0	0	0	0	0	0	0	0	0
Design	0	0	0	0	0	0	0	0	0	0	0
Construction/D&D	0	0	0	0	0	0	0	0	0	0	0
Operation	0	0	0	0	0	0	0	0	0	0	0
Total Percentage	0	0	0	0	0	0	0	0	0	0	0
Alt 2 Pretreatment Activity Reddick Costs($)											
Studies/Permitting	0	0	0	0	0	0	0	0	0	0	0
Design	0	0	0	0	0	0	0	0	0	0	0
Construction/D&D	0	0	0	0	0	0	0	0	0	0	0
Operation	0	0	0	0	0	0	0	0	0	0	0
Total Cost	0	0	0	0	0	0	0	0	0	0	0

ALTERNATIVE 2 PRETREATMENT REDDICK FTE BREAKDOWN	FY30	FY31	FY32	FY33	FY34	FY35	FY36	FY37	FY38	FY39	FY40
Contractor Reddick FTE per Alt 2 Pretreatment Activity (FTE)											
STUDIES/PERMITTING - Site Management/Operations	0.0	0.0	0.0	0.0	0.0	0.0	0.0	0.0	0.0	0.0	0.0
STUDIES/PERMITTING - Site Infrastructure	0.0	0.0	0.0	0.0	0.0	0.0	0.0	0.0	0.0	0.0	0.0
STUDIES/PERMITTING - National Laboratories	0.0	0.0	0.0	0.0	0.0	0.0	0.0	0.0	0.0	0.0	0.0
STUDIES/PERMITTING - Site Constructors	0.0	0.0	0.0	0.0	0.0	0.0	0.0	0.0	0.0	0.0	0.0
STUDIES/PERMITTING - Architecture/Engineering Contract	0.0	0.0	0.0	0.0	0.0	0.0	0.0	0.0	0.0	0.0	0.0
STUDIES/PERMITTING - Construction Contractor	0.0	0.0	0.0	0.0	0.0	0.0	0.0	0.0	0.0	0.0	0.0
DESIGN - Site Management/Operations	0.0	0.0	0.0	0.0	0.0	0.0	0.0	0.0	0.0	0.0	0.0
DESIGN - Site Infrastructure	0.0	0.0	0.0	0.0	0.0	0.0	0.0	0.0	0.0	0.0	0.0
DESIGN - National Laboratories	0.0	0.0	0.0	0.0	0.0	0.0	0.0	0.0	0.0	0.0	0.0
DESIGN - Site Constructors	0.0	0.0	0.0	0.0	0.0	0.0	0.0	0.0	0.0	0.0	0.0
DESIGN - Architecture/Engineering Contractors	0.0	0.0	0.0	0.0	0.0	0.0	0.0	0.0	0.0	0.0	0.0
DESIGN - Construction Contractor	0.0	0.0	0.0	0.0	0.0	0.0	0.0	0.0	0.0	0.0	0.0
CONSTRUCTION/D&D - Site Management/Operations	0.0	0.0	0.0	0.0	0.0	0.0	0.0	0.0	0.0	0.0	0.0
CONSTRUCTION/D&D - Site Infrastructure	0.0	0.0	0.0	0.0	0.0	0.0	0.0	0.0	0.0	0.0	0.0
CONSTRUCTION/D&D - National Laboratories	0.0	0.0	0.0	0.0	0.0	0.0	0.0	0.0	0.0	0.0	0.0
CONSTRUCTION/D&D - Site Constructors	0.0	0.0	0.0	0.0	0.0	0.0	0.0	0.0	0.0	0.0	0.0
CONSTRUCTION/D&D - Architecture/Engineering Contracto	0.0	0.0	0.0	0.0	0.0	0.0	0.0	0.0	0.0	0.0	0.0
CONSTRUCTION/D&D - Construction Contractor	0.0	0.0	0.0	0.0	0.0	0.0	0.0	0.0	0.0	0.0	0.0
OPERATIONS - Site Management/Operations	0.0	0.0	0.0	0.0	0.0	0.0	0.0	0.0	0.0	0.0	0.0
OPERATIONS - Site Infrastructure	0.0	0.0	0.0	0.0	0.0	0.0	0.0	0.0	0.0	0.0	0.0
OPERATIONS - National Laboratories	0.0	0.0	0.0	0.0	0.0	0.0	0.0	0.0	0.0	0.0	0.0
OPERATIONS - Site Constructors	0.0	0.0	0.0	0.0	0.0	0.0	0.0	0.0	0.0	0.0	0.0
OPERATIONS - Architecture/Engineering Contractors	0.0	0.0	0.0	0.0	0.0	0.0	0.0	0.0	0.0	0.0	0.0
OPERATIONS - Construction Contractor	0.0	0.0	0.0	0.0	0.0	0.0	0.0	0.0	0.0	0.0	0.0
Worker Category Reddick FTE (FTE)											
Engineer/Management	0.0	0.0	0.0	0.0	0.0	0.0	0.0	0.0	0.0	0.0	0.0
Crafts	0.0	0.0	0.0	0.0	0.0	0.0	0.0	0.0	0.0	0.0	0.0
Maintenance	0.0	0.0	0.0	0.0	0.0	0.0	0.0	0.0	0.0	0.0	0.0
Operators	0.0	0.0	0.0	0.0	0.0	0.0	0.0	0.0	0.0	0.0	0.0
Infrastructure	0.0	0.0	0.0	0.0	0.0	0.0	0.0	0.0	0.0	0.0	0.0
Total	0.0	0.0	0.0	0.0	0.0	0.0	0.0	0.0	0.0	0.0	0.0

ALTERNATIVE 2 PRETREATMENT COST SUMMARY	FY30	FY31	FY32	FY33	FY34	FY35	FY36	FY37	FY38	FY39	FY40
Studies/Permitting	0	0	0	0	0	0	0	0	0	0	0
Design	0	0	0	0	0	0	0	0	0	0	0
Construction/D&D	0	0	0	0	0	0	0	0	0	0	0
Operation	0	0	0	0	0	0	0	0	0	0	0
Total	0	0	0	0	0	0	0	0	0	0	0

ALTERNATIVE 2 PRETREATMENT FTE SUMMARY	FY30	FY31	FY32	FY33	FY34	FY35	FY36	FY37	FY38	FY39	FY40
Engineer/Management	0.0	0.0	0.0	0.0	0.0	0.0	0.0	0.0	0.0	0.0	0.0
Crafts	0.0	0.0	0.0	0.0	0.0	0.0	0.0	0.0	0.0	0.0	0.0
Maintenance	0.0	0.0	0.0	0.0	0.0	0.0	0.0	0.0	0.0	0.0	0.0
Operators	0.0	0.0	0.0	0.0	0.0	0.0	0.0	0.0	0.0	0.0	0.0
Infrastructure	0.0	0.0	0.0	0.0	0.0	0.0	0.0	0.0	0.0	0.0	0.0
Total	0.0	0.0	0.0	0.0	0.0	0.0	0.0	0.0	0.0	0.0	0.0

ALTERNATIVE 2 PRETREATMENT REDDICK COST BREAKDOWN

Activity % of Alt 2 Pretreatment Reddick Costs (%)	
Studies/Permitting	
Design	
Construction/D&D	
Operation	
Total Percentage	

Alt 2 Pretreatment Activity Reddick Costs($)	Totals
Studies/Permitting	8,325,000
Design	34,410,000
Construction/D&D	111,148,000
Operation	207,977,000
Total Cost	361,860,000

ALTERNATIVE 2 PRETREATMENT REDDICK FTE BREAKDOWN	Totals
Contractor Reddick FTE per Alt 2 Pretreatment Activity (FTE)	
STUDIES/PERMITTING - Site Management/Operations	48.0
STUDIES/PERMITTING - Site Infrastructure	8.5
STUDIES/PERMITTING - National Laboratories	2.2
STUDIES/PERMITTING - Site Constructors	0.0
STUDIES/PERMITTING - Architecture/Engineering Contract	0.0
STUDIES/PERMITTING - Construction Contractor	0.0
DESIGN - Site Management/Operations	20.9
DESIGN - Site Infrastructure	3.7
DESIGN - National Laboratories	18.5
DESIGN - Site Constructors	12.3
DESIGN - Architecture/Engineering Contractors	143.4
DESIGN - Construction Contractor	0.0
CONSTRUCTION/D&D - Site Management/Operations	67.5
CONSTRUCTION/D&D - Site Infrastructure	11.9
CONSTRUCTION/D&D - National Laboratories	0.0
CONSTRUCTION/D&D - Site Constructors	39.7
CONSTRUCTION/D&D - Architecture/Engineering Contracto	30.9
CONSTRUCTION/D&D - Construction Contractor	653.8
OPERATIONS - Site Management/Operations	883.9
OPERATIONS - Site Infrastructure	156.0
OPERATIONS - National Laboratories	111.6
OPERATIONS - Site Constructors	0.0
OPERATIONS - Architecture/Engineering Contractors	0.0
OPERATIONS - Construction Contractor	0.0
Worker Category Reddick FTE (FTE)	
Engineer/Management	705.2
Crafts	531.0
Maintenance	298.7
Operators	497.8
Infrastructure	180.1
Total	2,212.7

ALTERNATIVE 2 PRETREATMENT COST SUMMARY	Totals
Studies/Permitting	54,241,897
Design	46,028,715
Construction/D&D	143,811,317
Operation	500,814,342
Total	744,896,270

ALTERNATIVE 2 PRETREATMENT FTE SUMMARY	Totals
Engineer/Management	1,391.4
Crafts	687.0
Maintenance	709.9
Operators	1,183.1
Infrastructure	392.5
Total	4,364.0

FUNCTION - ALTERNATIVE 2 LLWV	FY95	FY96	FY97	FY98	FY99	FY00
Technology Development (Test) Cost	27,787,000	15,886,000	14,506,000	15,514,000	14,756,000	13,757,000
Perform LLW Cold Operations	0	0	0	0	0	0
Perform LLW Hot Operations First Year (Hot Test)	0	0	0	0	0	0
Subtotal Test Costs	27,787,000	15,886,000	14,506,000	15,514,000	14,756,000	13,757,000
Test Oversight Costs	2,778,700	1,588,600	1,450,600	1,551,400	1,475,600	1,375,700
Total LLWV Base Costs	**30,565,700**	**17,474,600**	**15,956,600**	**17,065,400**	**16,231,600**	**15,132,700**
Total Alt 2 Reddick Costs	2,000,000	2,000,000	6,000,000	10,000,000	38,000,000	38,000,000
LLWV % of Total Alt 2 Reddick Costs	7	7	7	7	7	7
Alt 2 LLWV Reddick Costs	**140,000**	**140,000**	**420,000**	**700,000**	**2,660,000**	**2,660,000**
Alt 2 LLWV Test Costs ($)	**30,705,700**	**17,614,600**	**16,376,600**	**17,765,400**	**18,891,600**	**17,792,700**

ALTERNATIVE 2 LLWV BASE COST BREAKDOWN	FY95	FY96	FY97	FY98	FY99	FY00
Activity % of Alt 2 LLWV Base Costs (%)						
Studies/Permitting	50	50	40	40	30	25
Design	0	0	0	0	0	0
Construction/D&D	10	10	10	10	10	5
Operation	40	40	50	50	60	70
Total Percentage	**100**	**100**	**100**	**100**	**100**	**100**
Alt 2 LLWV Base Costs($)						
Studies/Permitting	15,282,850	8,737,300	6,382,640	6,826,160	4,869,480	3,783,175
Design	0	0	0	0	0	0
Construction/D&D	3,056,570	1,747,460	1,595,660	1,706,540	1,623,160	756,635
Operation	12,226,280	6,989,840	7,978,300	8,532,700	9,738,960	10,592,890
Total Cost	**30,565,700**	**17,474,600**	**15,956,600**	**17,065,400**	**16,231,600**	**15,132,700**

ALTERNATIVE 2 LLWV BASE FTE BREAKDOWN	FY95	FY96	FY97	FY98	FY99	FY00
Contractor FTE per Alt 2 LLWV Activity (FTE)						
STUDIES/PERMITTING - Site Management/Operations	69.6	39.8	29.1	31.1	22.2	17.2
STUDIES/PERMITTING - Site Infrastructure	12.3	7.0	5.1	5.5	3.9	3.0
STUDIES/PERMITTING - National Laboratories	20.5	11.7	8.6	9.2	6.5	5.1
STUDIES/PERMITTING - Site Constructors	0.0	0.0	0.0	0.0	0.0	0.0
STUDIES/PERMITTING - Architecture/Engineering Contract	0.0	0.0	0.0	0.0	0.0	0.0
STUDIES/PERMITTING - Construction Contractor	0.0	0.0	0.0	0.0	0.0	0.0
DESIGN - Site Management/Operations	0.0	0.0	0.0	0.0	0.0	0.0
DESIGN - Site Infrastructure	0.0	0.0	0.0	0.0	0.0	0.0
DESIGN - National Laboratories	0.0	0.0	0.0	0.0	0.0	0.0
DESIGN - Site Constructors	0.0	0.0	0.0	0.0	0.0	0.0
DESIGN - Architecture/Engineering Contractors	0.0	0.0	0.0	0.0	0.0	0.0
DESIGN - Construction Contractor	0.0	0.0	0.0	0.0	0.0	0.0
CONSTRUCTION/D&D - Site Management/Operations	0.9	0.5	0.5	0.5	0.5	0.2
CONSTRUCTION/D&D - Site Infrastructure	0.2	0.1	0.1	0.1	0.1	0.0
CONSTRUCTION/D&D - National Laboratories	0.8	0.5	0.4	0.5	0.4	0.2
CONSTRUCTION/D&D - Site Constructors	1.1	0.6	0.6	0.6	0.6	0.3
CONSTRUCTION/D&D - Architecture/Engineering Contracto	0.8	0.5	0.4	0.5	0.5	0.2
CONSTRUCTION/D&D - Construction Contractor	18.0	10.3	9.4	10.0	9.5	4.5
OPERATIONS - Site Management/Operations	40.8	23.3	26.6	28.5	32.5	35.4
OPERATIONS - Site Infrastructure	7.2	4.1	4.7	5.0	5.7	6.2
OPERATIONS - National Laboratories	16.4	9.4	10.7	11.4	13.1	14.2
OPERATIONS - Site Constructors	0.0	0.0	0.0	0.0	0.0	0.0
OPERATIONS - Architecture/Engineering Contractors	0.0	0.0	0.0	0.0	0.0	0.0
OPERATIONS - Construction Contractor	0.0	0.0	0.0	0.0	0.0	0.0

Worker Category Base FTE (FTE)	FY95	FY96	FY97	FY98	FY99	FY00
Engineer/Management	108.6	62.1	48.8	52.2	41.6	34.0
Crafts	14.6	8.3	7.6	8.2	7.8	3.6
Maintenance	17.2	9.8	11.2	12.0	13.7	14.9
Operators	28.6	16.4	18.7	20.0	22.8	24.8
Infrastructure	19.6	11.2	9.9	10.6	9.7	9.3
Total	**188.6**	**107.8**	**96.2**	**102.9**	**95.5**	**86.6**

FUNCTION - ALTERNATIVE 2 LLWV	FY01	FY02	FY03	FY04	FY05
Technology Development (Test) Cost	12,939,000	12,026,000	11,461,000	10,127,000	9,810,000
Perform LLW Cold Operations	0	0	27,083,000	39,328,000	32,662,000
Perform LLW Hot Operations First Year (Hot Test)	0	0	0	0	44,803,000
Subtotal Test Costs	12,939,000	12,026,000	38,544,000	49,455,000	87,275,000
Test Oversight Costs	1,293,900	1,202,600	3,854,400	4,945,500	8,727,500
Total LLWV Base Costs	**14,232,900**	**13,228,600**	**42,398,400**	**54,400,500**	**96,002,500**
Total Alt 2 Reddick Costs	39,000,000	76,000,000	101,000,000	106,000,000	120,000,000
LLWV % of Total Alt 2 Reddick Costs	7	7	7	7	7
Alt 2 LLWV Reddick Costs	**2,730,000**	**5,320,000**	**7,070,000**	**7,420,000**	**8,400,000**
Alt 2 LLWV Test Costs ($)	**16,962,900**	**18,548,600**	**49,468,400**	**61,820,500**	**104,402,500**

ALTERNATIVE 2 LLWV BASE COST BREAKDOWN	FY01	FY02	FY03	FY04	FY05
Activity % of Alt 2 LLWV Base Costs (%)					
Studies/Permitting	0	0	0	0	0
Design	0	0	0	0	0
Construction/D&D	0	0	0	0	0
Operation	100	100	100	100	100
Total Percentage	**100**	**100**	**100**	**100**	**100**
Alt 2 LLWV Base Costs($)					
Studies/Permitting	0	0	0	0	0
Design	0	0	0	0	0
Construction/D&D	0	0	0	0	0
Operation	14,232,900	13,228,600	42,398,400	54,400,500	96,002,500
Total Cost	**14,232,900**	**13,228,600**	**42,398,400**	**54,400,500**	**96,002,500**

ALTERNATIVE 2 LLWV BASE FTE BREAKDOWN	FY01	FY02	FY03	FY04	FY05
Contractor FTE per Alt 2 LLWV Activity (FTE)					
STUDIES/PERMITTING - Site Management/Operations	0.0	0.0	0.0	0.0	0.0
STUDIES/PERMITTING - Site Infrastructure	0.0	0.0	0.0	0.0	0.0
STUDIES/PERMITTING - National Laboratories	0.0	0.0	0.0	0.0	0.0
STUDIES/PERMITTING - Site Constructors	0.0	0.0	0.0	0.0	0.0
STUDIES/PERMITTING - Architecture/Engineering Contract	0.0	0.0	0.0	0.0	0.0
STUDIES/PERMITTING - Construction Contractor	0.0	0.0	0.0	0.0	0.0
DESIGN - Site Management/Operations	0.0	0.0	0.0	0.0	0.0
DESIGN - Site Infrastructure	0.0	0.0	0.0	0.0	0.0
DESIGN - National Laboratories	0.0	0.0	0.0	0.0	0.0
DESIGN - Site Constructors	0.0	0.0	0.0	0.0	0.0
DESIGN - Architecture/Engineering Contractors	0.0	0.0	0.0	0.0	0.0
DESIGN - Construction Contractor	0.0	0.0	0.0	0.0	0.0
CONSTRUCTION/D&D - Site Management/Operations	0.0	0.0	0.0	0.0	0.0
CONSTRUCTION/D&D - Site Infrastructure	0.0	0.0	0.0	0.0	0.0
CONSTRUCTION/D&D - National Laboratories	0.0	0.0	0.0	0.0	0.0
CONSTRUCTION/D&D - Site Constructors	0.0	0.0	0.0	0.0	0.0
CONSTRUCTION/D&D - Architecture/Engineering Contracto	0.0	0.0	0.0	0.0	0.0
CONSTRUCTION/D&D - Construction Contractor	0.0	0.0	0.0	0.0	0.0
OPERATIONS - Site Management/Operations	47.5	44.2	141.6	181.7	320.6
OPERATIONS - Site Infrastructure	8.4	7.8	25.0	32.1	56.6
OPERATIONS - National Laboratories	19.1	17.7	56.9	73.0	128.8
OPERATIONS - Site Constructors	0.0	0.0	0.0	0.0	0.0
OPERATIONS - Architecture/Engineering Contractors	0.0	0.0	0.0	0.0	0.0
OPERATIONS - Construction Contractor	0.0	0.0	0.0	0.0	0.0

Worker Category Base FTE (FTE)	FY01	FY02	FY03	FY04	FY05
Engineer/Management	13.3	12.4	39.7	50.9	89.9
Crafts	0.0	0.0	0.0	0.0	0.0
Maintenance	20.0	18.6	59.5	76.4	134.8
Operators	33.3	31.0	99.2	127.3	224.7
Infrastructure	8.4	7.8	25.0	32.1	56.6
Total	**75.0**	**69.7**	**223.4**	**286.7**	**505.9**

FUNCTION - ALTERNATIVE 2 LLWV	FY06	FY07	FY08	FY09	FY10
Technology Development (Test) Cost	9,810,000	9,810,000	9,760,000	9,711,000	9,660,000
Perform LLW Cold Operations	0	0	0	0	0
Perform LLW Hot Operations First Year (Hot Test)	0	0	0	0	0
Subtotal Test Costs	9,810,000	9,810,000	9,760,000	9,711,000	9,660,000
Test Oversight Costs	981,000	981,000	976,000	971,100	966,000
Total LLWV Base Costs	**10,791,000**	**10,791,000**	**10,736,000**	**10,682,100**	**10,626,000**
Total Alt 2 Reddick Costs	80,000,000	95,000,000	95,000,000	85,000,000	85,000,000
LLWV % of Total Alt 2 Reddick Costs	7	7	7	7	7
Alt 2 LLWV Reddick Costs	**5,600,000**	**6,650,000**	**6,650,000**	**5,950,000**	**5,950,000**
Alt 2 LLWV Test Costs ($)	**16,391,000**	**17,441,000**	**17,386,000**	**16,632,100**	**16,576,000**

ALTERNATIVE 2 LLWV BASE COST BREAKDOWN	FY06	FY07	FY08	FY09	FY10
Activity % of Alt 2 LLWV Base Costs (%)					
Studies/Permitting	0	0	0	0	0
Design	0	0	0	0	0
Construction/D&D	0	0	0	0	0
Operation	100	100	100	100	100
Total Percentage	**100**	**100**	**100**	**100**	**100**
Alt 2 LLWV Base Costs($)					
Studies/Permitting	0	0	0	0	0
Design	0	0	0	0	0
Construction/D&D	0	0	0	0	0
Operation	10,791,000	10,791,000	10,736,000	10,682,100	10,626,000
Total Cost	**10,791,000**	**10,791,000**	**10,736,000**	**10,682,100**	**10,626,000**

ALTERNATIVE 2 LLWV BASE FTE BREAKDOWN	FY06	FY07	FY08	FY09	FY10
Contractor FTE per Alt 2 LLWV Activity (FTE)					
STUDIES/PERMITTING - Site Management/Operations	0.0	0.0	0.0	0.0	0.0
STUDIES/PERMITTING - Site Infrastructure	0.0	0.0	0.0	0.0	0.0
STUDIES/PERMITTING - National Laboratories	0.0	0.0	0.0	0.0	0.0
STUDIES/PERMITTING - Site Constructors	0.0	0.0	0.0	0.0	0.0
STUDIES/PERMITTING - Architecture/Engineering Contract	0.0	0.0	0.0	0.0	0.0
STUDIES/PERMITTING - Construction Contractor	0.0	0.0	0.0	0.0	0.0
DESIGN - Site Management/Operations	0.0	0.0	0.0	0.0	0.0
DESIGN - Site Infrastructure	0.0	0.0	0.0	0.0	0.0
DESIGN - National Laboratories	0.0	0.0	0.0	0.0	0.0
DESIGN - Site Constructors	0.0	0.0	0.0	0.0	0.0
DESIGN - Architecture/Engineering Contractors	0.0	0.0	0.0	0.0	0.0
DESIGN - Construction Contractor	0.0	0.0	0.0	0.0	0.0
CONSTRUCTION/D&D - Site Management/Operations	0.0	0.0	0.0	0.0	0.0
CONSTRUCTION/D&D - Site Infrastructure	0.0	0.0	0.0	0.0	0.0
CONSTRUCTION/D&D - National Laboratories	0.0	0.0	0.0	0.0	0.0
CONSTRUCTION/D&D - Site Constructors	0.0	0.0	0.0	0.0	0.0
CONSTRUCTION/D&D - Architecture/Engineering Contracto	0.0	0.0	0.0	0.0	0.0
CONSTRUCTION/D&D - Construction Contractor	0.0	0.0	0.0	0.0	0.0
OPERATIONS - Site Management/Operations	36.0	36.0	35.9	35.7	35.5
OPERATIONS - Site Infrastructure	6.4	6.4	6.3	6.3	6.3
OPERATIONS - National Laboratories	14.5	14.5	14.4	14.3	14.3
OPERATIONS - Site Constructors	0.0	0.0	0.0	0.0	0.0
OPERATIONS - Architecture/Engineering Contractors	0.0	0.0	0.0	0.0	0.0
OPERATIONS - Construction Contractor	0.0	0.0	0.0	0.0	0.0

Worker Category Base FTE (FTE)	FY06	FY07	FY08	FY09	FY10
Engineer/Management	10.1	10.1	10.1	10.0	9.9
Crafts	0.0	0.0	0.0	0.0	0.0
Maintenance	15.2	15.2	15.1	15.0	14.9
Operators	25.3	25.3	25.1	25.0	24.9
Infrastructure	6.4	6.4	6.3	6.3	6.3
Total	**56.9**	**56.9**	**56.6**	**56.3**	**56.0**

FUNCTION - ALTERNATIVE 2 LLWV	FY11	FY12	FY13	FY14	FY15	FY16	FY17
Technology Development (Test) Cost	9,596,000	9,486,000	9,427,000	3,730,000	107,000	88,000	30,000
Perform LLW Cold Operations	0	0	0	0	0	0	0
Perform LLW Hot Operations First Year (Hot Test)	0	0	0	0	0	0	0
Subtotal Test Costs	9,596,000	9,486,000	9,427,000	3,730,000	107,000	88,000	30,000
Test Oversight Costs	959,600	948,600	942,700	373,000	10,700	8,800	3,000
Total LLWV Base Costs	**10,555,600**	**10,434,600**	**10,369,700**	**4,103,000**	**117,700**	**96,800**	**33,000**
Total Alt 2 Reddick Costs							
LLWV % of Total Alt 2 Reddick Costs							
Alt 2 LLWV Reddick Costs	**0**	**0**	**0**	**0**	**0**	**0**	**0**
Alt 2 LLWV Test Costs ($)	**10,555,600**	**10,434,600**	**10,369,700**	**4,103,000**	**117,700**	**96,800**	**33,000**

ALTERNATIVE 2 LLWV BASE COST BREAKDOWN	FY11	FY12	FY13	FY14	FY15	FY16	FY17
Activity % of Alt 2 LLWV Base Costs (%)							
Studies/Permitting	0	0	0	0	0	0	50
Design	0	0	0	0	0	0	0
Construction/D&D	0	0	0	0	0	0	0
Operation	100	100	100	100	100	100	50
Total Percentage	**100**	**100**	**100**	**100**	**100**	**100**	**100**
Alt 2 LLWV Base Costs($)							
Studies/Permitting	0	0	0	0	0	0	16,500
Design	0	0	0	0	0	0	0
Construction/D&D	0	0	0	0	0	0	0
Operation	10,555,600	10,434,600	10,369,700	4,103,000	117,700	96,800	16,500
Total Cost	**10,555,600**	**10,434,600**	**10,369,700**	**4,103,000**	**117,700**	**96,800**	**33,000**

ALTERNATIVE 2 LLWV BASE FTE BREAKDOWN	FY11	FY12	FY13	FY14	FY15	FY16	FY17
Contractor FTE per Alt 2 LLWV Activity (FTE)							
STUDIES/PERMITTING - Site Management/Operations	0.0	0.0	0.0	0.0	0.0	0.0	0.1
STUDIES/PERMITTING - Site Infrastructure	0.0	0.0	0.0	0.0	0.0	0.0	0.0
STUDIES/PERMITTING - National Laboratories	0.0	0.0	0.0	0.0	0.0	0.0	0.0
STUDIES/PERMITTING - Site Constructors	0.0	0.0	0.0	0.0	0.0	0.0	0.0
STUDIES/PERMITTING - Architecture/Engineering Contract	0.0	0.0	0.0	0.0	0.0	0.0	0.0
STUDIES/PERMITTING - Construction Contractor	0.0	0.0	0.0	0.0	0.0	0.0	0.0
DESIGN - Site Management/Operations	0.0	0.0	0.0	0.0	0.0	0.0	0.0
DESIGN - Site Infrastructure	0.0	0.0	0.0	0.0	0.0	0.0	0.0
DESIGN - National Laboratories	0.0	0.0	0.0	0.0	0.0	0.0	0.0
DESIGN - Site Constructors	0.0	0.0	0.0	0.0	0.0	0.0	0.0
DESIGN - Architecture/Engineering Contractors	0.0	0.0	0.0	0.0	0.0	0.0	0.0
DESIGN - Construction Contractor	0.0	0.0	0.0	0.0	0.0	0.0	0.0
CONSTRUCTION/D&D - Site Management/Operations	0.0	0.0	0.0	0.0	0.0	0.0	0.0
CONSTRUCTION/D&D - Site Infrastructure	0.0	0.0	0.0	0.0	0.0	0.0	0.0
CONSTRUCTION/D&D - National Laboratories	0.0	0.0	0.0	0.0	0.0	0.0	0.0
CONSTRUCTION/D&D - Site Constructors	0.0	0.0	0.0	0.0	0.0	0.0	0.0
CONSTRUCTION/D&D - Architecture/Engineering Contracto	0.0	0.0	0.0	0.0	0.0	0.0	0.0
CONSTRUCTION/D&D - Construction Contractor	0.0	0.0	0.0	0.0	0.0	0.0	0.0
OPERATIONS - Site Management/Operations	35.2	34.8	34.6	13.7	0.4	0.3	0.1
OPERATIONS - Site Infrastructure	6.2	6.1	6.1	2.4	0.1	0.1	0.0
OPERATIONS - National Laboratories	14.2	14.0	13.9	5.5	0.2	0.1	0.0
OPERATIONS - Site Constructors	0.0	0.0	0.0	0.0	0.0	0.0	0.0
OPERATIONS - Architecture/Engineering Contractors	0.0	0.0	0.0	0.0	0.0	0.0	0.0
OPERATIONS - Construction Contractor	0.0	0.0	0.0	0.0	0.0	0.0	0.0

Worker Category Base FTE (FTE)	FY11	FY12	FY13	FY14	FY15	FY16	FY17
Engineer/Management	9.9	9.8	9.7	3.8	0.1	0.1	0.1
Crafts	0.0	0.0	0.0	0.0	0.0	0.0	0.0
Maintenance	14.8	14.7	14.6	5.8	0.2	0.1	0.0
Operators	24.7	24.4	24.3	9.6	0.3	0.2	0.0
Infrastructure	6.2	6.1	6.1	2.4	0.1	0.1	0.0
Total	**55.6**	**55.0**	**54.6**	**21.6**	**0.6**	**0.5**	**0.2**

FUNCTION - ALTERNATIVE 2 LLWV	FY18	FY19	FY20	FY21	FY22	FY23	FY24	FY25	FY26	FY27	FY28	FY29
Technology Development (Test) Cost	0	0	0	0	0	0	0	0	0	0	0	0
Perform LLW Cold Operations	0	0	0	0	0	0	0	0	0	0	0	0
Perform LLW Hot Operations First Year (Hot Test)	0	0	0	0	0	0	0	0	0	0	0	0
Subtotal Test Costs	0	0	0	0	0	0	0	0	0	0	0	0
Test Oversight Costs	0	0	0	0	0	0	0	0	0	0	0	0
Total LLWV Base Costs	0	0	0	0	0	0	0	0	0	0	0	0
Total Alt 2 Reddick Costs												
LLWV % of Total Alt 2 Reddick Costs												
Alt 2 LLWV Reddick Costs	0	0	0	0	0	0	0	0	0	0	0	0
Alt 2 LLWV Test Costs ($)	0	0	0	0	0	0	0	0	0	0	0	0

ALTERNATIVE 2 LLWV BASE COST BREAKDOWN	FY18	FY19	FY20	FY21	FY22	FY23	FY24	FY25	FY26	FY27	FY28	FY29
Activity % of Alt 2 LLWV Base Costs (%)												
Studies/Permitting	0	0	0	0	0	0	0	0	0	0	0	0
Design	0	0	0	0	0	0	0	0	0	0	0	0
Construction/D&D	0	0	0	0	0	0	0	0	0	0	0	0
Operation	0	0	0	0	0	0	0	0	0	0	0	0
Total Percentage	0	0	0	0	0	0	0	0	0	0	0	0
Alt 2 LLWV Base Costs($)												
Studies/Permitting	0	0	0	0	0	0	0	0	0	0	0	0
Design	0	0	0	0	0	0	0	0	0	0	0	0
Construction/D&D	0	0	0	0	0	0	0	0	0	0	0	0
Operation	0	0	0	0	0	0	0	0	0	0	0	0
Total Cost	0	0	0	0	0	0	0	0	0	0	0	0

ALTERNATIVE 2 LLWV BASE FTE BREAKDOWN	FY18	FY19	FY20	FY21	FY22	FY23	FY24	FY25	FY26	FY27	FY28	FY29
Contractor FTE per Alt 2 LLWV Activity (FTE)												
STUDIES/PERMITTING - Site Management/Operations	0.0	0.0	0.0	0.0	0.0	0.0	0.0	0.0	0.0	0.0	0.0	0.0
STUDIES/PERMITTING - Site Infrastructure	0.0	0.0	0.0	0.0	0.0	0.0	0.0	0.0	0.0	0.0	0.0	0.0
STUDIES/PERMITTING - National Laboratories	0.0	0.0	0.0	0.0	0.0	0.0	0.0	0.0	0.0	0.0	0.0	0.0
STUDIES/PERMITTING - Site Constructors	0.0	0.0	0.0	0.0	0.0	0.0	0.0	0.0	0.0	0.0	0.0	0.0
STUDIES/PERMITTING - Architecture/Engineering Contract	0.0	0.0	0.0	0.0	0.0	0.0	0.0	0.0	0.0	0.0	0.0	0.0
STUDIES/PERMITTING - Construction Contractor	0.0	0.0	0.0	0.0	0.0	0.0	0.0	0.0	0.0	0.0	0.0	0.0
DESIGN - Site Management/Operations	0.0	0.0	0.0	0.0	0.0	0.0	0.0	0.0	0.0	0.0	0.0	0.0
DESIGN - Site Infrastructure	0.0	0.0	0.0	0.0	0.0	0.0	0.0	0.0	0.0	0.0	0.0	0.0
DESIGN - National Laboratories	0.0	0.0	0.0	0.0	0.0	0.0	0.0	0.0	0.0	0.0	0.0	0.0
DESIGN - Site Constructors	0.0	0.0	0.0	0.0	0.0	0.0	0.0	0.0	0.0	0.0	0.0	0.0
DESIGN - Architecture/Engineering Contractors	0.0	0.0	0.0	0.0	0.0	0.0	0.0	0.0	0.0	0.0	0.0	0.0
DESIGN - Construction Contractor	0.0	0.0	0.0	0.0	0.0	0.0	0.0	0.0	0.0	0.0	0.0	0.0
CONSTRUCTION/D&D - Site Management/Operations	0.0	0.0	0.0	0.0	0.0	0.0	0.0	0.0	0.0	0.0	0.0	0.0
CONSTRUCTION/D&D - Site Infrastructure	0.0	0.0	0.0	0.0	0.0	0.0	0.0	0.0	0.0	0.0	0.0	0.0
CONSTRUCTION/D&D - National Laboratories	0.0	0.0	0.0	0.0	0.0	0.0	0.0	0.0	0.0	0.0	0.0	0.0
CONSTRUCTION/D&D - Site Constructors	0.0	0.0	0.0	0.0	0.0	0.0	0.0	0.0	0.0	0.0	0.0	0.0
CONSTRUCTION/D&D - Architecture/Engineering Contracto	0.0	0.0	0.0	0.0	0.0	0.0	0.0	0.0	0.0	0.0	0.0	0.0
CONSTRUCTION/D&D - Construction Contractor	0.0	0.0	0.0	0.0	0.0	0.0	0.0	0.0	0.0	0.0	0.0	0.0
OPERATIONS - Site Management/Operations	0.0	0.0	0.0	0.0	0.0	0.0	0.0	0.0	0.0	0.0	0.0	0.0
OPERATIONS - Site Infrastructure	0.0	0.0	0.0	0.0	0.0	0.0	0.0	0.0	0.0	0.0	0.0	0.0
OPERATIONS - National Laboratories	0.0	0.0	0.0	0.0	0.0	0.0	0.0	0.0	0.0	0.0	0.0	0.0
OPERATIONS - Site Constructors	0.0	0.0	0.0	0.0	0.0	0.0	0.0	0.0	0.0	0.0	0.0	0.0
OPERATIONS - Architecture/Engineering Contractors	0.0	0.0	0.0	0.0	0.0	0.0	0.0	0.0	0.0	0.0	0.0	0.0
OPERATIONS - Construction Contractor	0.0	0.0	0.0	0.0	0.0	0.0	0.0	0.0	0.0	0.0	0.0	0.0

Worker Category Base FTE (FTE)	FY18	FY19	FY20	FY21	FY22	FY23	FY24	FY25	FY26	FY27	FY28	FY29
Engineer/Management	0.0	0.0	0.0	0.0	0.0	0.0	0.0	0.0	0.0	0.0	0.0	0.0
Crafts	0.0	0.0	0.0	0.0	0.0	0.0	0.0	0.0	0.0	0.0	0.0	0.0
Maintenance	0.0	0.0	0.0	0.0	0.0	0.0	0.0	0.0	0.0	0.0	0.0	0.0
Operators	0.0	0.0	0.0	0.0	0.0	0.0	0.0	0.0	0.0	0.0	0.0	0.0
Infrastructure	0.0	0.0	0.0	0.0	0.0	0.0	0.0	0.0	0.0	0.0	0.0	0.0
Total	0.0	0.0	0.0	0.0	0.0	0.0	0.0	0.0	0.0	0.0	0.0	0.0

FUNCTION - ALTERNATIVE 2 LLWV	FY30	FY31	FY32	FY33	FY34	FY35	FY36	FY37	FY38	FY39	FY40
Technology Development (Test) Cost	0	0	0	0	0	0	0	0	0	0	0
Perform LLW Cold Operations	0	0	0	0	0	0	0	0	0	0	0
Perform LLW Hot Operations First Year (Hot Test)	0	0	0	0	0	0	0	0	0	0	0
Subtotal Test Costs	0	0	0	0	0	0	0	0	0	0	0
Test Oversight Costs	0	0	0	0	0	0	0	0	0	0	0
Total LLWV Base Costs	0	0	0	0	0	0	0	0	0	0	0
Total Alt 2 Reddick Costs											
LLWV % of Total Alt 2 Reddick Costs											
Alt 2 LLWV Reddick Costs	0	0	0	0	0	0	0	0	0	0	0
Alt 2 LLWV Test Costs ($)	0	0	0	0	0	0	0	0	0	0	0

ALTERNATIVE 2 LLWV BASE COST BREAKDOWN	FY30	FY31	FY32	FY33	FY34	FY35	FY36	FY37	FY38	FY39	FY40
Activity % of Alt 2 LLWV Base Costs (%)											
Studies/Permitting	0	0	0	0	0	0	0	0	0	0	0
Design	0	0	0	0	0	0	0	0	0	0	0
Construction/D&D	0	0	0	0	0	0	0	0	0	0	0
Operation	0	0	0	0	0	0	0	0	0	0	0
Total Percentage	0	0	0	0	0	0	0	0	0	0	0
Alt 2 LLWV Base Costs($)											
Studies/Permitting	0	0	0	0	0	0	0	0	0	0	0
Design	0	0	0	0	0	0	0	0	0	0	0
Construction/D&D	0	0	0	0	0	0	0	0	0	0	0
Operation	0	0	0	0	0	0	0	0	0	0	0
Total Cost	0	0	0	0	0	0	0	0	0	0	0

ALTERNATIVE 2 LLWV BASE FTE BREAKDOWN	FY30	FY31	FY32	FY33	FY34	FY35	FY36	FY37	FY38	FY39	FY40
Contractor FTE per Alt 2 LLWV Activity (FTE)											
STUDIES/PERMITTING - Site Management/Operations	0.0	0.0	0.0	0.0	0.0	0.0	0.0	0.0	0.0	0.0	0.0
STUDIES/PERMITTING - Site Infrastructure	0.0	0.0	0.0	0.0	0.0	0.0	0.0	0.0	0.0	0.0	0.0
STUDIES/PERMITTING - National Laboratories	0.0	0.0	0.0	0.0	0.0	0.0	0.0	0.0	0.0	0.0	0.0
STUDIES/PERMITTING - Site Constructors	0.0	0.0	0.0	0.0	0.0	0.0	0.0	0.0	0.0	0.0	0.0
STUDIES/PERMITTING - Architecture/Engineering Contract	0.0	0.0	0.0	0.0	0.0	0.0	0.0	0.0	0.0	0.0	0.0
STUDIES/PERMITTING - Construction Contractor	0.0	0.0	0.0	0.0	0.0	0.0	0.0	0.0	0.0	0.0	0.0
DESIGN - Site Management/Operations	0.0	0.0	0.0	0.0	0.0	0.0	0.0	0.0	0.0	0.0	0.0
DESIGN - Site Infrastructure	0.0	0.0	0.0	0.0	0.0	0.0	0.0	0.0	0.0	0.0	0.0
DESIGN - National Laboratories	0.0	0.0	0.0	0.0	0.0	0.0	0.0	0.0	0.0	0.0	0.0
DESIGN - Site Constructors	0.0	0.0	0.0	0.0	0.0	0.0	0.0	0.0	0.0	0.0	0.0
DESIGN - Architecture/Engineering Contractors	0.0	0.0	0.0	0.0	0.0	0.0	0.0	0.0	0.0	0.0	0.0
DESIGN - Construction Contractor	0.0	0.0	0.0	0.0	0.0	0.0	0.0	0.0	0.0	0.0	0.0
CONSTRUCTION/D&D - Site Management/Operations	0.0	0.0	0.0	0.0	0.0	0.0	0.0	0.0	0.0	0.0	0.0
CONSTRUCTION/D&D - Site Infrastructure	0.0	0.0	0.0	0.0	0.0	0.0	0.0	0.0	0.0	0.0	0.0
CONSTRUCTION/D&D - National Laboratories	0.0	0.0	0.0	0.0	0.0	0.0	0.0	0.0	0.0	0.0	0.0
CONSTRUCTION/D&D - Site Constructors	0.0	0.0	0.0	0.0	0.0	0.0	0.0	0.0	0.0	0.0	0.0
CONSTRUCTION/D&D - Architecture/Engineering Contracto	0.0	0.0	0.0	0.0	0.0	0.0	0.0	0.0	0.0	0.0	0.0
CONSTRUCTION/D&D - Construction Contractor	0.0	0.0	0.0	0.0	0.0	0.0	0.0	0.0	0.0	0.0	0.0
OPERATIONS - Site Management/Operations	0.0	0.0	0.0	0.0	0.0	0.0	0.0	0.0	0.0	0.0	0.0
OPERATIONS - Site Infrastructure	0.0	0.0	0.0	0.0	0.0	0.0	0.0	0.0	0.0	0.0	0.0
OPERATIONS - National Laboratories	0.0	0.0	0.0	0.0	0.0	0.0	0.0	0.0	0.0	0.0	0.0
OPERATIONS - Site Constructors	0.0	0.0	0.0	0.0	0.0	0.0	0.0	0.0	0.0	0.0	0.0
OPERATIONS - Architecture/Engineering Contractors	0.0	0.0	0.0	0.0	0.0	0.0	0.0	0.0	0.0	0.0	0.0
OPERATIONS - Construction Contractor	0.0	0.0	0.0	0.0	0.0	0.0	0.0	0.0	0.0	0.0	0.0

Worker Category Base FTE (FTE)	FY30	FY31	FY32	FY33	FY34	FY35	FY36	FY37	FY38	FY39	FY40
Engineer/Management	0.0	0.0	0.0	0.0	0.0	0.0	0.0	0.0	0.0	0.0	0.0
Crafts	0.0	0.0	0.0	0.0	0.0	0.0	0.0	0.0	0.0	0.0	0.0
Maintenance	0.0	0.0	0.0	0.0	0.0	0.0	0.0	0.0	0.0	0.0	0.0
Operators	0.0	0.0	0.0	0.0	0.0	0.0	0.0	0.0	0.0	0.0	0.0
Infrastructure	0.0	0.0	0.0	0.0	0.0	0.0	0.0	0.0	0.0	0.0	0.0
Total	0.0	0.0	0.0	0.0	0.0	0.0	0.0	0.0	0.0	0.0	0.0

FUNCTION - ALTERNATIVE 2 LLWV	Totals
Technology Development (Test) Cost	239,784,000
Perform LLW Cold Operations	
Perform LLW Hot Operations First Year (Hot Test)	44,803,000
Subtotal Test Costs	383,660,000
Test Oversight Costs	38,366,000
Total LLWV Base Costs	422,026,000
Total Alt 2 Reddick Costs	978,000,000
LLWV % of Total Alt 2 Reddick Costs	112
Alt 2 LLWV Reddick Costs	68,460,000
Alt 2 LLWV Test Costs ($)	490,486,000

ALTERNATIVE 2 LLWV BASE COST BREAKDOWN

Activity % of Alt 2 LLWV Base Costs (%)	
Studies/Permitting	
Design	
Construction/D&D	
Operation	
Total Percentage	

Alt 2 LLWV Base Costs($)	Totals
Studies/Permitting	45,898,105
Design	0
Construction/D&D	10,486,025
Operation	365,641,870
Total Cost	422,026,000

ALTERNATIVE 2 LLWV BASE FTE BREAKDOWN	Totals
Contractor FTE per Alt 2 LLWV Activity (FTE)	
STUDIES/PERMITTING - Site Management/Operations	209.0
STUDIES/PERMITTING - Site Infrastructure	36.9
STUDIES/PERMITTING - National Laboratories	61.6
STUDIES/PERMITTING - Site Constructors	0.0
STUDIES/PERMITTING - Architecture/Engineering Contract	0.0
STUDIES/PERMITTING - Construction Contractor	0.0
DESIGN - Site Management/Operations	0.0
DESIGN - Site Infrastructure	0.0
DESIGN - National Laboratories	0.0
DESIGN - Site Constructors	0.0
DESIGN - Architecture/Engineering Contractors	0.0
DESIGN - Construction Contractor	0.0
CONSTRUCTION/D&D - Site Management/Operations	3.2
CONSTRUCTION/D&D - Site Infrastructure	0.6
CONSTRUCTION/D&D - National Laboratories	2.8
CONSTRUCTION/D&D - Site Constructors	3.7
CONSTRUCTION/D&D - Architecture/Engineering Contracto	2.9
CONSTRUCTION/D&D - Construction Contractor	61.7
OPERATIONS - Site Management/Operations	1,221.0
OPERATIONS - Site Infrastructure	215.5
OPERATIONS - National Laboratories	490.5
OPERATIONS - Site Constructors	0.0
OPERATIONS - Architecture/Engineering Contractors	0.0
OPERATIONS - Construction Contractor	0.0

Worker Category Base FTE (FTE)	Totals
Engineer/Management	637.1
Crafts	50.1
Maintenance	513.5
Operators	855.8
Infrastructure	252.9
Total	2,309.3

ALTERNATIVE 2 LLWV REDDICK COST BREAKDOWN	FY95	FY96	FY97	FY98	FY99	FY00
Activity % of Alt 2 LLWV Reddick Costs (%)						
Studies/Permitting	100	100	100	0	0	0
Design	0	0	0	100	100	100
Construction/D&D	0	0	0	0	0	0
Operation	0	0	0	0	0	0
Total Percentage	100	100	100	100	100	100
Alt 2 LLWV Reddick Costs($)						
Studies/Permitting	140,000	140,000	420,000	0	0	0
Design	0	0	0	700,000	2,660,000	2,660,000
Construction/D&D	0	0	0	0	0	0
Operation	0	0	0	0	0	0
Total Cost	140,000	140,000	420,000	700,000	2,660,000	2,660,000

ALTERNATIVE 2 LLWV REDDICK FTE BREAKDOWN	FY95	FY96	FY97	FY98	FY99	FY00
Contractor FTE per Alt 2 LLWV Activity (FTE)						
STUDIES/PERMITTING - Site Management/Operations	0.8	0.8	2.4	0.0	0.0	0.0
STUDIES/PERMITTING - Site Infrastructure	0.1	0.1	0.4	0.0	0.0	0.0
STUDIES/PERMITTING - National Laboratories	0.0	0.0	0.1	0.0	0.0	0.0
STUDIES/PERMITTING - Site Constructors	0.0	0.0	0.0	0.0	0.0	0.0
STUDIES/PERMITTING - Architecture/Engineering Contract	0.0	0.0	0.0	0.0	0.0	0.0
STUDIES/PERMITTING - Construction Contractor	0.0	0.0	0.0	0.0	0.0	0.0
DESIGN - Site Management/Operations	0.0	0.0	0.0	0.4	1.6	1.6
DESIGN - Site Infrastructure	0.0	0.0	0.0	0.1	0.3	0.3
DESIGN - National Laboratories	0.0	0.0	0.0	0.4	1.4	1.4
DESIGN - Site Constructors	0.0	0.0	0.0	0.3	1.0	1.0
DESIGN - Architecture/Engineering Contractors	0.0	0.0	0.0	2.9	11.1	11.1
DESIGN - Construction Contractor	0.0	0.0	0.0	0.0	0.0	0.0
CONSTRUCTION/D&D - Site Management/Operations	0.0	0.0	0.0	0.0	0.0	0.0
CONSTRUCTION/D&D - Site Infrastructure	0.0	0.0	0.0	0.0	0.0	0.0
CONSTRUCTION/D&D - National Laboratories	0.0	0.0	0.0	0.0	0.0	0.0
CONSTRUCTION/D&D - Site Constructors	0.0	0.0	0.0	0.0	0.0	0.0
CONSTRUCTION/D&D - Architecture/Engineering Contracto	0.0	0.0	0.0	0.0	0.0	0.0
CONSTRUCTION/D&D - Construction Contractor	0.0	0.0	0.0	0.0	0.0	0.0
OPERATIONS - Site Management/Operations	0.0	0.0	0.0	0.0	0.0	0.0
OPERATIONS - Site Infrastructure	0.0	0.0	0.0	0.0	0.0	0.0
OPERATIONS - National Laboratories	0.0	0.0	0.0	0.0	0.0	0.0
OPERATIONS - Site Constructors	0.0	0.0	0.0	0.0	0.0	0.0
OPERATIONS - Architecture/Engineering Contractors	0.0	0.0	0.0	0.0	0.0	0.0
OPERATIONS - Construction Contractor	0.0	0.0	0.0	0.0	0.0	0.0
Worker Category Reddick FTE (FTE)						
Engineer/Management	0.8	0.8	2.5	4.0	15.1	15.1
Crafts	0.0	0.0	0.0	0.0	0.0	0.0
Maintenance	0.0	0.0	0.0	0.0	0.0	0.0
Operators	0.0	0.0	0.0	0.0	0.0	0.0
Infrastructure	0.1	0.1	0.4	0.1	0.3	0.3
Total	1.0	1.0	3.0	4.0	15.4	15.4

ALTERNATIVE 2 LLWV COST SUMMARY	FY95	FY96	FY97	FY98	FY99	FY00
Studies/Permitting	15,422,850	8,877,300	6,802,640	6,826,160	4,869,480	3,783,175
Design	0	0	0	700,000	2,660,000	2,660,000
Construction/D&D	3,056,570	1,747,460	1,595,660	1,706,540	1,623,160	756,635
Operation	12,226,280	6,989,840	7,978,300	8,532,700	9,738,960	10,592,890
Total	30,705,700	17,614,600	16,376,600	17,765,400	18,891,600	17,792,700

ALTERNATIVE 2 LLWV FTE SUMMARY	FY95	FY96	FY97	FY98	FY99	FY00
Engineer/Management	109.5	62.9	51.3	56.1	56.7	49.0
Crafts	14.6	8.3	7.6	8.2	7.8	3.6
Maintenance	17.2	9.8	11.2	12.0	13.7	14.9
Operators	28.6	16.4	18.7	20.0	22.8	24.8
Infrastructure	19.8	11.4	10.3	10.7	10.0	9.6
Total	189.6	108.8	99.2	106.9	110.9	101.9

ALTERNATIVE 2 LLWV REDDICK COST BREAKDOWN	FY01	FY02	FY03	FY04	FY05
Activity % of Alt 2 LLWV Reddick Costs (%)					
Studies/Permitting	0	0	0	0	0
Design	0	0	0	0	0
Construction/D&D	100	100	100	0	0
Operation	0	0	0	100	100
Total Percentage	**100**	**100**	**100**	**100**	**100**
Alt 2 LLWV Reddick Costs($)					
Studies/Permitting	0	0	0	0	0
Design	0	0	0	0	0
Construction/D&D	2,730,000	5,320,000	7,070,000	0	0
Operation	0	0	0	7,420,000	8,400,000
Total Cost	**2,730,000**	**5,320,000**	**7,070,000**	**7,420,000**	**8,400,000**

ALTERNATIVE 2 LLWV REDDICK FTE BREAKDOWN	FY01	FY02	FY03	FY04	FY05
Contractor FTE per Alt 2 LLWV Activity (FTE)					
STUDIES/PERMITTING - Site Management/Operations	0.0	0.0	0.0	0.0	0.0
STUDIES/PERMITTING - Site Infrastructure	0.0	0.0	0.0	0.0	0.0
STUDIES/PERMITTING - National Laboratories	0.0	0.0	0.0	0.0	0.0
STUDIES/PERMITTING - Site Constructors	0.0	0.0	0.0	0.0	0.0
STUDIES/PERMITTING - Architecture/Engineering Contract	0.0	0.0	0.0	0.0	0.0
STUDIES/PERMITTING - Construction Contractor	0.0	0.0	0.0	0.0	0.0
DESIGN - Site Management/Operations	0.0	0.0	0.0	0.0	0.0
DESIGN - Site Infrastructure	0.0	0.0	0.0	0.0	0.0
DESIGN - National Laboratories	0.0	0.0	0.0	0.0	0.0
DESIGN - Site Constructors	0.0	0.0	0.0	0.0	0.0
DESIGN - Architecture/Engineering Contractors	0.0	0.0	0.0	0.0	0.0
DESIGN - Construction Contractor	0.0	0.0	0.0	0.0	0.0
CONSTRUCTION/D&D - Site Management/Operations	1.7	3.2	4.3	0.0	0.0
CONSTRUCTION/D&D - Site Infrastructure	0.3	0.6	0.8	0.0	0.0
CONSTRUCTION/D&D - National Laboratories	0.0	0.0	0.0	0.0	0.0
CONSTRUCTION/D&D - Site Constructors	1.0	1.9	2.5	0.0	0.0
CONSTRUCTION/D&D - Architecture/Engineering Contracto	0.8	1.5	2.0	0.0	0.0
CONSTRUCTION/D&D - Construction Contractor	16.1	31.3	41.6	0.0	0.0
OPERATIONS - Site Management/Operations	0.0	0.0	0.0	31.5	35.7
OPERATIONS - Site Infrastructure	0.0	0.0	0.0	5.6	6.3
OPERATIONS - National Laboratories	0.0	0.0	0.0	4.0	4.5
OPERATIONS - Site Constructors	0.0	0.0	0.0	0.0	0.0
OPERATIONS - Architecture/Engineering Contractors	0.0	0.0	0.0	0.0	0.0
OPERATIONS - Construction Contractor	0.0	0.0	0.0	0.0	0.0
Worker Category Reddick FTE (FTE)					
Engineer/Management	6.4	12.5	16.6	7.1	8.0
Crafts	13.0	25.4	33.8	0.0	0.0
Maintenance	0.0	0.0	0.0	10.7	12.1
Operators	0.0	0.0	0.0	17.8	20.1
Infrastructure	0.3	0.6	0.8	5.6	6.3
Total	**19.7**	**38.5**	**51.1**	**41.1**	**46.5**

ALTERNATIVE 2 LLWV COST SUMMARY	FY01	FY02	FY03	FY04	FY05
Studies/Permitting	0	0	0	0	0
Design	0	0	0	0	0
Construction/D&D	2,730,000	5,320,000	7,070,000	0	0
Operation	14,232,900	13,228,600	42,398,400	61,820,500	104,402,500
Total	16,962,900	18,548,600	49,468,400	61,820,500	104,402,500

ALTERNATIVE 2 LLWV FTE SUMMARY	FY01	FY02	FY03	FY04	FY05
Engineer/Management	19.7	24.9	56.3	58.0	97.9
Crafts	13.0	25.4	33.8	0.0	0.0
Maintenance	20.0	18.6	59.5	87.0	146.9
Operators	33.3	31.0	99.2	145.1	244.8
Infrastructure	8.7	8.4	25.7	37.6	62.9
Total	94.8	108.2	274.6	327.8	552.5

ALTERNATIVE 2 LLWV REDDICK COST BREAKDOWN	FY06	FY07	FY08	FY09	FY10
Activity % of Alt 2 LLWV Reddick Costs (%)					
Studies/Permitting	0	0	0	0	0
Design	0	0	0	0	0
Construction/D&D	0	0	0	0	0
Operation	100	100	100	0	0
Total Percentage	100	100	100	0	0
Alt 2 LLWV Reddick Costs($)					
Studies/Permitting	0	0	0	0	0
Design	0	0	0	0	0
Construction/D&D	0	0	0	0	0
Operation	5,600,000	6,650,000	6,650,000	0	0
Total Cost	5,600,000	6,650,000	6,650,000	0	0

ALTERNATIVE 2 LLWV REDDICK FTE BREAKDOWN	FY06	FY07	FY08	FY09	FY10
Contractor FTE per Alt 2 LLWV Activity (FTE)					
STUDIES/PERMITTING - Site Management/Operations	0.0	0.0	0.0	0.0	0.0
STUDIES/PERMITTING - Site Infrastructure	0.0	0.0	0.0	0.0	0.0
STUDIES/PERMITTING - National Laboratories	0.0	0.0	0.0	0.0	0.0
STUDIES/PERMITTING - Site Constructors	0.0	0.0	0.0	0.0	0.0
STUDIES/PERMITTING - Architecture/Engineering Contract	0.0	0.0	0.0	0.0	0.0
STUDIES/PERMITTING - Construction Contractor	0.0	0.0	0.0	0.0	0.0
DESIGN - Site Management/Operations	0.0	0.0	0.0	0.0	0.0
DESIGN - Site Infrastructure	0.0	0.0	0.0	0.0	0.0
DESIGN - National Laboratories	0.0	0.0	0.0	0.0	0.0
DESIGN - Site Constructors	0.0	0.0	0.0	0.0	0.0
DESIGN - Architecture/Engineering Contractors	0.0	0.0	0.0	0.0	0.0
DESIGN - Construction Contractor	0.0	0.0	0.0	0.0	0.0
CONSTRUCTION/D&D - Site Management/Operations	0.0	0.0	0.0	0.0	0.0
CONSTRUCTION/D&D - Site Infrastructure	0.0	0.0	0.0	0.0	0.0
CONSTRUCTION/D&D - National Laboratories	0.0	0.0	0.0	0.0	0.0
CONSTRUCTION/D&D - Site Constructors	0.0	0.0	0.0	0.0	0.0
CONSTRUCTION/D&D - Architecture/Engineering Contracto	0.0	0.0	0.0	0.0	0.0
CONSTRUCTION/D&D - Construction Contractor	0.0	0.0	0.0	0.0	0.0
OPERATIONS - Site Management/Operations	23.8	28.3	28.3	0.0	0.0
OPERATIONS - Site Infrastructure	4.2	5.0	5.0	0.0	0.0
OPERATIONS - National Laboratories	3.0	3.6	3.6	0.0	0.0
OPERATIONS - Site Constructors	0.0	0.0	0.0	0.0	0.0
OPERATIONS - Architecture/Engineering Contractors	0.0	0.0	0.0	0.0	0.0
OPERATIONS - Construction Contractor	0.0	0.0	0.0	0.0	0.0
Worker Category Reddick FTE (FTE)					
Engineer/Management	5.4	6.4	6.4	0.0	0.0
Crafts	0.0	0.0	0.0	0.0	0.0
Maintenance	8.0	9.5	9.5	0.0	0.0
Operators	13.4	15.9	15.9	0.0	0.0
Infrastructure	4.2	5.0	5.0	0.0	0.0
Total	31.0	36.8	36.8	0.0	0.0

ALTERNATIVE 2 LLWV COST SUMMARY	FY06	FY07	FY08	FY09	FY10
Studies/Permitting	0	0	0	0	0
Design	0	0	0	0	0
Construction/D&D	0	0	0	0	0
Operation	16,391,000	17,441,000	17,386,000	10,682,100	10,626,000
Total	16,391,000	17,441,000	17,386,000	10,682,100	10,626,000

ALTERNATIVE 2 LLWV FTE SUMMARY	FY06	FY07	FY08	FY09	FY10
Engineer/Management	15.5	16.5	16.4	10.0	9.9
Crafts	0.0	0.0	0.0	0.0	0.0
Maintenance	23.2	24.7	24.6	15.0	14.9
Operators	38.7	41.2	41.0	25.0	24.9
Infrastructure	10.6	11.3	11.3	6.3	6.3
Total	87.9	93.7	93.4	56.3	56.0

ALTERNATIVE 2 LLWV REDDICK COST BREAKDOWN	FY11	FY12	FY13	FY14	FY15	FY16	FY17
Activity % of Alt 2 LLWV Reddick Costs (%)							
Studies/Permitting	0	0	0	0	0	0	0
Design	0	0	0	0	0	0	0
Construction/D&D	0	0	0	0	0	0	0
Operation	0	0	0	0	0	0	0
Total Percentage	0	0	0	0	0	0	0
Alt 2 LLWV Reddick Costs($)							
Studies/Permitting	0	0	0	0	0	0	0
Design	0	0	0	0	0	0	0
Construction/D&D	0	0	0	0	0	0	0
Operation	0	0	0	0	0	0	0
Total Cost	0	0	0	0	0	0	0

ALTERNATIVE 2 LLWV REDDICK FTE BREAKDOWN	FY11	FY12	FY13	FY14	FY15	FY16	FY17
Contractor FTE per Alt 2 LLWV Activity (FTE)							
STUDIES/PERMITTING - Site Management/Operations	0.0	0.0	0.0	0.0	0.0	0.0	0.0
STUDIES/PERMITTING - Site Infrastructure	0.0	0.0	0.0	0.0	0.0	0.0	0.0
STUDIES/PERMITTING - National Laboratories	0.0	0.0	0.0	0.0	0.0	0.0	0.0
STUDIES/PERMITTING - Site Constructors	0.0	0.0	0.0	0.0	0.0	0.0	0.0
STUDIES/PERMITTING - Architecture/Engineering Contract	0.0	0.0	0.0	0.0	0.0	0.0	0.0
STUDIES/PERMITTING - Construction Contractor	0.0	0.0	0.0	0.0	0.0	0.0	0.0
DESIGN - Site Management/Operations	0.0	0.0	0.0	0.0	0.0	0.0	0.0
DESIGN - Site Infrastructure	0.0	0.0	0.0	0.0	0.0	0.0	0.0
DESIGN - National Laboratories	0.0	0.0	0.0	0.0	0.0	0.0	0.0
DESIGN - Site Constructors	0.0	0.0	0.0	0.0	0.0	0.0	0.0
DESIGN - Architecture/Engineering Contractors	0.0	0.0	0.0	0.0	0.0	0.0	0.0
DESIGN - Construction Contractor	0.0	0.0	0.0	0.0	0.0	0.0	0.0
CONSTRUCTION/D&D - Site Management/Operations	0.0	0.0	0.0	0.0	0.0	0.0	0.0
CONSTRUCTION/D&D - Site Infrastructure	0.0	0.0	0.0	0.0	0.0	0.0	0.0
CONSTRUCTION/D&D - National Laboratories	0.0	0.0	0.0	0.0	0.0	0.0	0.0
CONSTRUCTION/D&D - Site Constructors	0.0	0.0	0.0	0.0	0.0	0.0	0.0
CONSTRUCTION/D&D - Architecture/Engineering Contracto	0.0	0.0	0.0	0.0	0.0	0.0	0.0
CONSTRUCTION/D&D - Construction Contractor	0.0	0.0	0.0	0.0	0.0	0.0	0.0
OPERATIONS - Site Management/Operations	0.0	0.0	0.0	0.0	0.0	0.0	0.0
OPERATIONS - Site Infrastructure	0.0	0.0	0.0	0.0	0.0	0.0	0.0
OPERATIONS - National Laboratories	0.0	0.0	0.0	0.0	0.0	0.0	0.0
OPERATIONS - Site Constructors	0.0	0.0	0.0	0.0	0.0	0.0	0.0
OPERATIONS - Architecture/Engineering Contractors	0.0	0.0	0.0	0.0	0.0	0.0	0.0
OPERATIONS - Construction Contractor	0.0	0.0	0.0	0.0	0.0	0.0	0.0
Worker Category Reddick FTE (FTE)							
Engineer/Management	0.0	0.0	0.0	0.0	0.0	0.0	0.0
Crafts	0.0	0.0	0.0	0.0	0.0	0.0	0.0
Maintenance	0.0	0.0	0.0	0.0	0.0	0.0	0.0
Operators	0.0	0.0	0.0	0.0	0.0	0.0	0.0
Infrastructure	0.0	0.0	0.0	0.0	0.0	0.0	0.0
Total	0.0	0.0	0.0	0.0	0.0	0.0	0.0

ALTERNATIVE 2 LLWV COST SUMMARY	FY11	FY12	FY13	FY14	FY15	FY16	FY17
Studies/Permitting	0	0	0	0	0	0	16,500
Design	0	0	0	0	0	0	0
Construction/D&D	0	0	0	0	0	0	0
Operation	10,555,600	10,434,600	10,369,700	4,103,000	117,700	96,800	16,500
Total	10,555,600	10,434,600	10,369,700	4,103,000	117,700	96,800	33,000

ALTERNATIVE 2 LLWV FTE SUMMARY	FY11	FY12	FY13	FY14	FY15	FY16	FY17
Engineer/Management	9.9	9.8	9.7	3.8	0.1	0.1	0.1
Crafts	0.0	0.0	0.0	0.0	0.0	0.0	0.0
Maintenance	14.8	14.7	14.6	5.8	0.2	0.1	0.0
Operators	24.7	24.4	24.3	9.6	0.3	0.2	0.0
Infrastructure	6.2	6.1	6.1	2.4	0.1	0.1	0.0
Total	55.6	55.0	54.6	21.6	0.6	0.5	0.2

ALTERNATIVE 2 LLWV REDDICK COST BREAKDOWN	FY18	FY19	FY20	FY21	FY22	FY23	FY24	FY25	FY26	FY27	FY28	FY29
Activity % of Alt 2 LLWV Reddick Costs (%)												
Studies/Permitting	0	0	0	0	0	0	0	0	0	0	0	0
Design	0	0	0	0	0	0	0	0	0	0	0	0
Construction/D&D	0	0	0	0	0	0	0	0	0	0	0	0
Operation	0	0	0	0	0	0	0	0	0	0	0	0
Total Percentage	0	0	0	0	0	0	0	0	0	0	0	0
Alt 2 LLWV Reddick Costs($)												
Studies/Permitting	0	0	0	0	0	0	0	0	0	0	0	0
Design	0	0	0	0	0	0	0	0	0	0	0	0
Construction/D&D	0	0	0	0	0	0	0	0	0	0	0	0
Operation	0	0	0	0	0	0	0	0	0	0	0	0
Total Cost	0	0	0	0	0	0	0	0	0	0	0	0

ALTERNATIVE 2 LLWV REDDICK FTE BREAKDOWN	FY18	FY19	FY20	FY21	FY22	FY23	FY24	FY25	FY26	FY27	FY28	FY29
Contractor FTE per Alt 2 LLWV Activity (FTE)												
STUDIES/PERMITTING - Site Management/Operations	0.0	0.0	0.0	0.0	0.0	0.0	0.0	0.0	0.0	0.0	0.0	0.0
STUDIES/PERMITTING - Site Infrastructure	0.0	0.0	0.0	0.0	0.0	0.0	0.0	0.0	0.0	0.0	0.0	0.0
STUDIES/PERMITTING - National Laboratories	0.0	0.0	0.0	0.0	0.0	0.0	0.0	0.0	0.0	0.0	0.0	0.0
STUDIES/PERMITTING - Site Constructors	0.0	0.0	0.0	0.0	0.0	0.0	0.0	0.0	0.0	0.0	0.0	0.0
STUDIES/PERMITTING - Architecture/Engineering Contract	0.0	0.0	0.0	0.0	0.0	0.0	0.0	0.0	0.0	0.0	0.0	0.0
STUDIES/PERMITTING - Construction Contractor	0.0	0.0	0.0	0.0	0.0	0.0	0.0	0.0	0.0	0.0	0.0	0.0
DESIGN - Site Management/Operations	0.0	0.0	0.0	0.0	0.0	0.0	0.0	0.0	0.0	0.0	0.0	0.0
DESIGN - Site Infrastructure	0.0	0.0	0.0	0.0	0.0	0.0	0.0	0.0	0.0	0.0	0.0	0.0
DESIGN - National Laboratories	0.0	0.0	0.0	0.0	0.0	0.0	0.0	0.0	0.0	0.0	0.0	0.0
DESIGN - Site Constructors	0.0	0.0	0.0	0.0	0.0	0.0	0.0	0.0	0.0	0.0	0.0	0.0
DESIGN - Architecture/Engineering Contractors	0.0	0.0	0.0	0.0	0.0	0.0	0.0	0.0	0.0	0.0	0.0	0.0
DESIGN - Construction Contractor	0.0	0.0	0.0	0.0	0.0	0.0	0.0	0.0	0.0	0.0	0.0	0.0
CONSTRUCTION/D&D - Site Management/Operations	0.0	0.0	0.0	0.0	0.0	0.0	0.0	0.0	0.0	0.0	0.0	0.0
CONSTRUCTION/D&D - Site Infrastructure	0.0	0.0	0.0	0.0	0.0	0.0	0.0	0.0	0.0	0.0	0.0	0.0
CONSTRUCTION/D&D - National Laboratories	0.0	0.0	0.0	0.0	0.0	0.0	0.0	0.0	0.0	0.0	0.0	0.0
CONSTRUCTION/D&D - Site Constructors	0.0	0.0	0.0	0.0	0.0	0.0	0.0	0.0	0.0	0.0	0.0	0.0
CONSTRUCTION/D&D - Architecture/Engineering Contracto	0.0	0.0	0.0	0.0	0.0	0.0	0.0	0.0	0.0	0.0	0.0	0.0
CONSTRUCTION/D&D - Construction Contractor	0.0	0.0	0.0	0.0	0.0	0.0	0.0	0.0	0.0	0.0	0.0	0.0
OPERATIONS - Site Management/Operations	0.0	0.0	0.0	0.0	0.0	0.0	0.0	0.0	0.0	0.0	0.0	0.0
OPERATIONS - Site Infrastructure	0.0	0.0	0.0	0.0	0.0	0.0	0.0	0.0	0.0	0.0	0.0	0.0
OPERATIONS - National Laboratories	0.0	0.0	0.0	0.0	0.0	0.0	0.0	0.0	0.0	0.0	0.0	0.0
OPERATIONS - Site Constructors	0.0	0.0	0.0	0.0	0.0	0.0	0.0	0.0	0.0	0.0	0.0	0.0
OPERATIONS - Architecture/Engineering Contractors	0.0	0.0	0.0	0.0	0.0	0.0	0.0	0.0	0.0	0.0	0.0	0.0
OPERATIONS - Construction Contractor	0.0	0.0	0.0	0.0	0.0	0.0	0.0	0.0	0.0	0.0	0.0	0.0
Worker Category Reddick FTE (FTE)												
Engineer/Management	0.0	0.0	0.0	0.0	0.0	0.0	0.0	0.0	0.0	0.0	0.0	0.0
Crafts	0.0	0.0	0.0	0.0	0.0	0.0	0.0	0.0	0.0	0.0	0.0	0.0
Maintenance	0.0	0.0	0.0	0.0	0.0	0.0	0.0	0.0	0.0	0.0	0.0	0.0
Operators	0.0	0.0	0.0	0.0	0.0	0.0	0.0	0.0	0.0	0.0	0.0	0.0
Infrastructure	0.0	0.0	0.0	0.0	0.0	0.0	0.0	0.0	0.0	0.0	0.0	0.0
Total	0.0	0.0	0.0	0.0	0.0	0.0	0.0	0.0	0.0	0.0	0.0	0.0

ALTERNATIVE 2 LLWV COST SUMMARY	FY18	FY19	FY20	FY21	FY22	FY23	FY24	FY25	FY26	FY27	FY28	FY29
Studies/Permitting	0	0	0	0	0	0	0	0	0	0	0	0
Design	0	0	0	0	0	0	0	0	0	0	0	0
Construction/D&D	0	0	0	0	0	0	0	0	0	0	0	0
Operation	0	0	0	0	0	0	0	0	0	0	0	0
Total	0	0	0	0	0	0	0	0	0	0	0	0

ALTERNATIVE 2 LLWV FTE SUMMARY	FY18	FY19	FY20	FY21	FY22	FY23	FY24	FY25	FY26	FY27	FY28	FY29
Engineer/Management	0.0	0.0	0.0	0.0	0.0	0.0	0.0	0.0	0.0	0.0	0.0	0.0
Crafts	0.0	0.0	0.0	0.0	0.0	0.0	0.0	0.0	0.0	0.0	0.0	0.0
Maintenance	0.0	0.0	0.0	0.0	0.0	0.0	0.0	0.0	0.0	0.0	0.0	0.0
Operators	0.0	0.0	0.0	0.0	0.0	0.0	0.0	0.0	0.0	0.0	0.0	0.0
Infrastructure	0.0	0.0	0.0	0.0	0.0	0.0	0.0	0.0	0.0	0.0	0.0	0.0
Total	0.0	0.0	0.0	0.0	0.0	0.0	0.0	0.0	0.0	0.0	0.0	0.0

ALTERNATIVE 2 LLWV REDDICK COST BREAKDOWN	FY30	FY31	FY32	FY33	FY34	FY35	FY36	FY37	FY38	FY39	FY40
Activity % of Alt 2 LLWV Reddick Costs (%)											
Studies/Permitting	0	0	0	0	0	0	0	0	0	0	0
Design	0	0	0	0	0	0	0	0	0	0	0
Construction/D&D	0	0	0	0	0	0	0	0	0	0	0
Operation	0	0	0	0	0	0	0	0	0	0	0
Total Percentage	0	0	0	0	0	0	0	0	0	0	0
Alt 2 LLWV Reddick Costs($)											
Studies/Permitting	0	0	0	0	0	0	0	0	0	0	0
Design	0	0	0	0	0	0	0	0	0	0	0
Construction/D&D	0	0	0	0	0	0	0	0	0	0	0
Operation	0	0	0	0	0	0	0	0	0	0	0
Total Cost	0	0	0	0	0	0	0	0	0	0	0

ALTERNATIVE 2 LLWV REDDICK FTE BREAKDOWN	FY30	FY31	FY32	FY33	FY34	FY35	FY36	FY37	FY38	FY39	FY40
Contractor FTE per Alt 2 LLWV Activity (FTE)											
STUDIES/PERMITTING - Site Management/Operations	0.0	0.0	0.0	0.0	0.0	0.0	0.0	0.0	0.0	0.0	0.0
STUDIES/PERMITTING - Site Infrastructure	0.0	0.0	0.0	0.0	0.0	0.0	0.0	0.0	0.0	0.0	0.0
STUDIES/PERMITTING - National Laboratories	0.0	0.0	0.0	0.0	0.0	0.0	0.0	0.0	0.0	0.0	0.0
STUDIES/PERMITTING - Site Constructors	0.0	0.0	0.0	0.0	0.0	0.0	0.0	0.0	0.0	0.0	0.0
STUDIES/PERMITTING - Architecture/Engineering Contract	0.0	0.0	0.0	0.0	0.0	0.0	0.0	0.0	0.0	0.0	0.0
STUDIES/PERMITTING - Construction Contractor	0.0	0.0	0.0	0.0	0.0	0.0	0.0	0.0	0.0	0.0	0.0
DESIGN - Site Management/Operations	0.0	0.0	0.0	0.0	0.0	0.0	0.0	0.0	0.0	0.0	0.0
DESIGN - Site Infrastructure	0.0	0.0	0.0	0.0	0.0	0.0	0.0	0.0	0.0	0.0	0.0
DESIGN - National Laboratories	0.0	0.0	0.0	0.0	0.0	0.0	0.0	0.0	0.0	0.0	0.0
DESIGN - Site Constructors	0.0	0.0	0.0	0.0	0.0	0.0	0.0	0.0	0.0	0.0	0.0
DESIGN - Architecture/Engineering Contractors	0.0	0.0	0.0	0.0	0.0	0.0	0.0	0.0	0.0	0.0	0.0
DESIGN - Construction Contractor	0.0	0.0	0.0	0.0	0.0	0.0	0.0	0.0	0.0	0.0	0.0
CONSTRUCTION/D&D - Site Management/Operations	0.0	0.0	0.0	0.0	0.0	0.0	0.0	0.0	0.0	0.0	0.0
CONSTRUCTION/D&D - Site Infrastructure	0.0	0.0	0.0	0.0	0.0	0.0	0.0	0.0	0.0	0.0	0.0
CONSTRUCTION/D&D - National Laboratories	0.0	0.0	0.0	0.0	0.0	0.0	0.0	0.0	0.0	0.0	0.0
CONSTRUCTION/D&D - Site Constructors	0.0	0.0	0.0	0.0	0.0	0.0	0.0	0.0	0.0	0.0	0.0
CONSTRUCTION/D&D - Architecture/Engineering Contracto	0.0	0.0	0.0	0.0	0.0	0.0	0.0	0.0	0.0	0.0	0.0
CONSTRUCTION/D&D - Construction Contractor	0.0	0.0	0.0	0.0	0.0	0.0	0.0	0.0	0.0	0.0	0.0
OPERATIONS - Site Management/Operations	0.0	0.0	0.0	0.0	0.0	0.0	0.0	0.0	0.0	0.0	0.0
OPERATIONS - Site Infrastructure	0.0	0.0	0.0	0.0	0.0	0.0	0.0	0.0	0.0	0.0	0.0
OPERATIONS - National Laboratories	0.0	0.0	0.0	0.0	0.0	0.0	0.0	0.0	0.0	0.0	0.0
OPERATIONS - Site Constructors	0.0	0.0	0.0	0.0	0.0	0.0	0.0	0.0	0.0	0.0	0.0
OPERATIONS - Architecture/Engineering Contractors	0.0	0.0	0.0	0.0	0.0	0.0	0.0	0.0	0.0	0.0	0.0
OPERATIONS - Construction Contractor	0.0	0.0	0.0	0.0	0.0	0.0	0.0	0.0	0.0	0.0	0.0
Worker Category Reddick FTE (FTE)											
Engineer/Management	0.0	0.0	0.0	0.0	0.0	0.0	0.0	0.0	0.0	0.0	0.0
Crafts	0.0	0.0	0.0	0.0	0.0	0.0	0.0	0.0	0.0	0.0	0.0
Maintenance	0.0	0.0	0.0	0.0	0.0	0.0	0.0	0.0	0.0	0.0	0.0
Operators	0.0	0.0	0.0	0.0	0.0	0.0	0.0	0.0	0.0	0.0	0.0
Infrastructure	0.0	0.0	0.0	0.0	0.0	0.0	0.0	0.0	0.0	0.0	0.0
Total	0.0	0.0	0.0	0.0	0.0	0.0	0.0	0.0	0.0	0.0	0.0

ALTERNATIVE 2 LLWV COST SUMMARY	FY30	FY31	FY32	FY33	FY34	FY35	FY36	FY37	FY38	FY39	FY40
Studies/Permitting	0	0	0	0	0	0	0	0	0	0	0
Design	0	0	0	0	0	0	0	0	0	0	0
Construction/D&D	0	0	0	0	0	0	0	0	0	0	0
Operation	0	0	0	0	0	0	0	0	0	0	0
Total	0	0	0	0	0	0	0	0	0	0	0

ALTERNATIVE 2 LLWV FTE SUMMARY	FY30	FY31	FY32	FY33	FY34	FY35	FY36	FY37	FY38	FY39	FY40
Engineer/Management	0.0	0.0	0.0	0.0	0.0	0.0	0.0	0.0	0.0	0.0	0.0
Crafts	0.0	0.0	0.0	0.0	0.0	0.0	0.0	0.0	0.0	0.0	0.0
Maintenance	0.0	0.0	0.0	0.0	0.0	0.0	0.0	0.0	0.0	0.0	0.0
Operators	0.0	0.0	0.0	0.0	0.0	0.0	0.0	0.0	0.0	0.0	0.0
Infrastructure	0.0	0.0	0.0	0.0	0.0	0.0	0.0	0.0	0.0	0.0	0.0
Total	0.0	0.0	0.0	0.0	0.0	0.0	0.0	0.0	0.0	0.0	0.0

ALTERNATIVE 2 LLWV REDDICK COST BREAKDOWN

Activity % of Alt 2 LLWV Reddick Costs (%)	
Studies/Permitting	
Design	
Construction/D&D	
Operation	
Total Percentage	

Alt 2 LLWV Reddick Costs($)	Totals
Studies/Permitting	700,000
Design	6,020,000
Construction/D&D	15,120,000
Operation	34,720,000
Total Cost	56,560,000

ALTERNATIVE 2 LLWV REDDICK FTE BREAKDOWN	Totals
Contractor FTE per Alt 2 LLWV Activity (FTE)	
STUDIES/PERMITTING - Site Management/Operations	4.0
STUDIES/PERMITTING - Site Infrastructure	0.7
STUDIES/PERMITTING - National Laboratories	0.2
STUDIES/PERMITTING - Site Constructors	0.0
STUDIES/PERMITTING - Architecture/Engineering Contract	0.0
STUDIES/PERMITTING - Construction Contractor	0.0
DESIGN - Site Management/Operations	3.7
DESIGN - Site Infrastructure	0.6
DESIGN - National Laboratories	3.2
DESIGN - Site Constructors	2.2
DESIGN - Architecture/Engineering Contractors	25.1
DESIGN - Construction Contractor	0.0
CONSTRUCTION/D&D - Site Management/Operations	9.2
CONSTRUCTION/D&D - Site Infrastructure	1.6
CONSTRUCTION/D&D - National Laboratories	0.0
CONSTRUCTION/D&D - Site Constructors	5.4
CONSTRUCTION/D&D - Architecture/Engineering Contracto	4.2
CONSTRUCTION/D&D - Construction Contractor	88.9
OPERATIONS - Site Management/Operations	147.6
OPERATIONS - Site Infrastructure	26.0
OPERATIONS - National Laboratories	18.6
OPERATIONS - Site Constructors	0.0
OPERATIONS - Architecture/Engineering Contractors	0.0
OPERATIONS - Construction Contractor	0.0
Worker Category Reddick FTE (FTE)	
Engineer/Management	107.1
Crafts	72.2
Maintenance	49.9
Operators	83.1
Infrastructure	29.0
Total	341.3

ALTERNATIVE 2 LLWV COST SUMMARY	Totals
Studies/Permitting	46,598,105
Design	6,020,000
Construction/D&D	25,606,025
Operation	400,361,870
Total	478,586,000

ALTERNATIVE 2 LLWV FTE SUMMARY	Totals
Engineer/Management	744.2
Crafts	122.3
Maintenance	563.3
Operators	938.8
Infrastructure	281.9
Total	2,650.6

FUNCTION - ALTERNATIVE 2 HLWV	FY95	FY96	FY97	FY98	FY99	FY00
Technology Development (Test) Cost	13,582,327	17,101,894	15,321,558	1,124,209	0	0
Perform HLW Hot Operations First Year (Hot Test)	0	0	0	0	0	0
Perform HLW Cold Operations	0	0	0	0	0	0
Subtotal Test Costs	13,582,327	17,101,894	15,321,558	1,124,209	0	0
Test Oversight Costs	0	0	0	0	0	0
Total HLWV Base Costs	**13,582,327**	**17,101,894**	**15,321,558**	**1,124,209**	**0**	**0**
Total Alt 2 Reddick Costs	2,000,000	2,000,000	6,000,000	10,000,000	38,000,000	38,000,000
LLWV % of Total Alt 2 Reddick Costs	*52*	*52*	*52*	*52*	*52*	*52*
Alt 2 LLWV Reddick Costs	**1,040,000**	**1,040,000**	**3,120,000**	**5,200,000**	**19,760,000**	**19,760,000**
Alternative 2 HLWV Test Costs ($)	**14,622,327**	**18,141,894**	**18,441,558**	**6,324,209**	**19,760,000**	**19,760,000**

ALTERNATIVE 2 HLWV BASE COST BREAKDOWN	FY95	FY96	FY97	FY98	FY99	FY00
Activity % of Alternative 2 HLWV Base Costs (%)						
Studies/Permitting	45	45	40	25	0	0
Design	5	5	0	0	0	0
Construction/D&D	10	10	10	5	0	0
Operation	40	40	50	70	0	0
Total Percentage	**100**	**100**	**100**	**100**	**0**	**0**
Alternative 2 HLWV Base Costs($)						
Studies/Permitting	6,112,047	7,695,852	6,128,623	281,052	0	0
Design	679,116	855,095	0	0	0	0
Construction/D&D	1,358,233	1,710,189	1,532,156	56,210	0	0
Operation	5,432,931	6,840,758	7,660,779	786,946	0	0
Total Cost	**13,582,327**	**17,101,894**	**15,321,558**	**1,124,209**	**0**	**0**

ALTERNATIVE 2 HLWV BASE FTE BREAKDOWN	FY95	FY96	FY97	FY98	FY99	FY00
Contractor FTE per Alternative 2 HLWV Activity (FTE)						
STUDIES/PERMITTING - Site Management/Operations	27.8	35.0	27.9	1.3	0.0	0.0
STUDIES/PERMITTING - Site Infrastructure	4.9	6.2	4.9	0.2	0.0	0.0
STUDIES/PERMITTING - National Laboratories	8.2	10.3	8.2	0.4	0.0	0.0
STUDIES/PERMITTING - Site Constructors	0.0	0.0	0.0	0.0	0.0	0.0
STUDIES/PERMITTING - Architecture/Engineering Contract	0.0	0.0	0.0	0.0	0.0	0.0
STUDIES/PERMITTING - Construction Contractor	0.0	0.0	0.0	0.0	0.0	0.0
DESIGN - Site Management/Operations	0.4	0.5	0.0	0.0	0.0	0.0
DESIGN - Site Infrastructure	0.1	0.1	0.0	0.0	0.0	0.0
DESIGN - National Laboratories	0.4	0.5	0.0	0.0	0.0	0.0
DESIGN - Site Constructors	0.2	0.3	0.0	0.0	0.0	0.0
DESIGN - Architecture/Engineering Contractors	2.8	3.6	0.0	0.0	0.0	0.0
DESIGN - Construction Contractor	0.0	0.0	0.0	0.0	0.0	0.0
CONSTRUCTION/D&D - Site Management/Operations	0.4	0.5	0.5	0.0	0.0	0.0
CONSTRUCTION/D&D - Site Infrastructure	0.1	0.1	0.1	0.0	0.0	0.0
CONSTRUCTION/D&D - National Laboratories	0.4	0.5	0.4	0.0	0.0	0.0
CONSTRUCTION/D&D - Site Constructors	0.5	0.6	0.5	0.0	0.0	0.0
CONSTRUCTION/D&D - Architecture/Engineering Contracto	0.4	0.5	0.4	0.0	0.0	0.0
CONSTRUCTION/D&D - Construction Contractor	8.0	10.1	9.0	0.3	0.0	0.0
OPERATIONS - Site Management/Operations	18.1	22.8	25.6	2.6	0.0	0.0
OPERATIONS - Site Infrastructure	3.2	4.0	4.5	0.5	0.0	0.0
OPERATIONS - National Laboratories	7.3	9.2	10.3	1.1	0.0	0.0
OPERATIONS - Site Constructors	0.0	0.0	0.0	0.0	0.0	0.0
OPERATIONS - Architecture/Engineering Contractors	0.0	0.0	0.0	0.0	0.0	0.0
OPERATIONS - Construction Contractor	0.0	0.0	0.0	0.0	0.0	0.0

Worker Category Base FTE (FTE)	FY95	FY96	FY97	FY98	FY99	FY00
Engineer/Management	48.1	60.6	46.8	2.5	0.0	0.0
Crafts	6.5	8.2	7.3	0.3	0.0	0.0
Maintenance	7.6	9.6	10.8	1.1	0.0	0.0
Operators	12.7	16.0	17.9	1.8	0.0	0.0
Infrastructure	8.3	10.4	9.5	0.7	0.0	0.0
Total	**83.2**	**104.8**	**92.4**	**6.4**	**0.0**	**0.0**

FUNCTION - ALTERNATIVE 2 HLWV	FY01	FY02	FY03	FY04	FY05
Technology Development (Test) Cost	0	0	0	0	0
Perform HLW Hot Operations First Year (Hot Test)	0	0	0	0	0
Perform HLW Cold Operations	0	0	0	857,272	16,282,120
Subtotal Test Costs	0	0	0	857,272	16,282,120
Test Oversight Costs	0	0	0	0	0
Total HLWV Base Costs	**0**	**0**	**0**	**857,272**	**16,282,120**
Total Alt 2 Reddick Costs	39,000,000	76,000,000	101,000,000	106,000,000	120,000,000
LLWV % of Total Alt 2 Reddick Costs	*52*	*52*	*52*	*52*	*52*
Alt 2 LLWV Reddick Costs	**20,280,000**	**39,520,000**	**52,520,000**	**55,120,000**	**62,400,000**
Alternative 2 HLWV Test Costs ($)	**20,280,000**	**39,520,000**	**52,520,000**	**55,977,272**	**78,682,120**

ALTERNATIVE 2 HLWV BASE COST BREAKDOWN	FY01	FY02	FY03	FY04	FY05
Activity % of Alternative 2 HLWV Base Costs (%)					
Studies/Permitting	0	0	0	0	0
Design	0	0	0	0	0
Construction/D&D	0	0	0	0	0
Operation	0	0	0	100	100
Total Percentage	**0**	**0**	**0**	**100**	**100**
Alternative 2 HLWV Base Costs($)					
Studies/Permitting	0	0	0	0	0
Design	0	0	0	0	0
Construction/D&D	0	0	0	0	0
Operation	0	0	0	857,272	16,282,120
Total Cost	**0**	**0**	**0**	**857,272**	**16,282,120**

ALTERNATIVE 2 HLWV BASE FTE BREAKDOWN	FY01	FY02	FY03	FY04	FY05
Contractor FTE per Alternative 2 HLWV Activity (FTE)					
STUDIES/PERMITTING - Site Management/Operations	0.0	0.0	0.0	0.0	0.0
STUDIES/PERMITTING - Site Infrastructure	0.0	0.0	0.0	0.0	0.0
STUDIES/PERMITTING - National Laboratories	0.0	0.0	0.0	0.0	0.0
STUDIES/PERMITTING - Site Constructors	0.0	0.0	0.0	0.0	0.0
STUDIES/PERMITTING - Architecture/Engineering Contract	0.0	0.0	0.0	0.0	0.0
STUDIES/PERMITTING - Construction Contractor	0.0	0.0	0.0	0.0	0.0
DESIGN - Site Management/Operations	0.0	0.0	0.0	0.0	0.0
DESIGN - Site Infrastructure	0.0	0.0	0.0	0.0	0.0
DESIGN - National Laboratories	0.0	0.0	0.0	0.0	0.0
DESIGN - Site Constructors	0.0	0.0	0.0	0.0	0.0
DESIGN - Architecture/Engineering Contractors	0.0	0.0	0.0	0.0	0.0
DESIGN - Construction Contractor	0.0	0.0	0.0	0.0	0.0
CONSTRUCTION/D&D - Site Management/Operations	0.0	0.0	0.0	0.0	0.0
CONSTRUCTION/D&D - Site Infrastructure	0.0	0.0	0.0	0.0	0.0
CONSTRUCTION/D&D - National Laboratories	0.0	0.0	0.0	0.0	0.0
CONSTRUCTION/D&D - Site Constructors	0.0	0.0	0.0	0.0	0.0
CONSTRUCTION/D&D - Architecture/Engineering Contracto	0.0	0.0	0.0	0.0	0.0
CONSTRUCTION/D&D - Construction Contractor	0.0	0.0	0.0	0.0	0.0
OPERATIONS - Site Management/Operations	0.0	0.0	0.0	2.9	54.4
OPERATIONS - Site Infrastructure	0.0	0.0	0.0	0.5	9.6
OPERATIONS - National Laboratories	0.0	0.0	0.0	1.2	21.8
OPERATIONS - Site Constructors	0.0	0.0	0.0	0.0	0.0
OPERATIONS - Architecture/Engineering Contractors	0.0	0.0	0.0	0.0	0.0
OPERATIONS - Construction Contractor	0.0	0.0	0.0	0.0	0.0

Worker Category Base FTE (FTE)	FY01	FY02	FY03	FY04	FY05
Engineer/Management	0.0	0.0	0.0	0.8	15.2
Crafts	0.0	0.0	0.0	0.0	0.0
Maintenance	0.0	0.0	0.0	1.2	22.9
Operators	0.0	0.0	0.0	2.0	38.1
Infrastructure	0.0	0.0	0.0	0.5	9.6
Total	**0.0**	**0.0**	**0.0**	**4.5**	**85.8**

FUNCTION - ALTERNATIVE 2 HLWV	FY06	FY07	FY08	FY09	FY10
Technology Development (Test) Cost	0	0	0	0	0
Perform HLW Hot Operations First Year (Hot Test)	0	0	0	0	219,742,768
Perform HLW Cold Operations	36,334,800	58,298,612	78,584,160	6,753,131	0
Subtotal Test Costs	36,334,800	58,298,612	78,584,160	6,753,131	219,742,768
Test Oversight Costs	0	0	0	0	0
Total HLWV Base Costs	**36,334,800**	**58,298,612**	**78,584,160**	**6,753,131**	**219,742,768**
Total Alt 2 Reddick Costs	80,000,000	95,000,000	95,000,000	85,000,000	85,000,000
LLWV % of Total Alt 2 Reddick Costs	*52*	*52*	*52*	*52*	*52*
Alt 2 LLWV Reddick Costs	**41,600,000**	**49,400,000**	**49,400,000**	**44,200,000**	**44,200,000**
Alternative 2 HLWV Test Costs ($)	**77,934,800**	**107,698,612**	**127,984,160**	**50,953,131**	**263,942,768**

ALTERNATIVE 2 HLWV BASE COST BREAKDOWN	FY06	FY07	FY08	FY09	FY10
Activity % of Alternative 2 HLWV Base Costs (%)					
Studies/Permitting	0	0	0	0	0
Design	0	0	0	0	0
Construction/D&D	0	0	0	0	0
Operation	100	100	100	100	100
Total Percentage	**100**	**100**	**100**	**100**	**100**
Alternative 2 HLWV Base Costs($)					
Studies/Permitting	0	0	0	0	0
Design	0	0	0	0	0
Construction/D&D	0	0	0	0	0
Operation	36,334,800	58,298,612	78,584,160	6,753,131	219,742,768
Total Cost	**36,334,800**	**58,298,612**	**78,584,160**	**6,753,131**	**219,742,768**

ALTERNATIVE 2 HLWV BASE FTE BREAKDOWN	FY06	FY07	FY08	FY09	FY10
Contractor FTE per Alternative 2 HLWV Activity (FTE)					
STUDIES/PERMITTING - Site Management/Operations	0.0	0.0	0.0	0.0	0.0
STUDIES/PERMITTING - Site Infrastructure	0.0	0.0	0.0	0.0	0.0
STUDIES/PERMITTING - National Laboratories	0.0	0.0	0.0	0.0	0.0
STUDIES/PERMITTING - Site Constructors	0.0	0.0	0.0	0.0	0.0
STUDIES/PERMITTING - Architecture/Engineering Contract	0.0	0.0	0.0	0.0	0.0
STUDIES/PERMITTING - Construction Contractor	0.0	0.0	0.0	0.0	0.0
DESIGN - Site Management/Operations	0.0	0.0	0.0	0.0	0.0
DESIGN - Site Infrastructure	0.0	0.0	0.0	0.0	0.0
DESIGN - National Laboratories	0.0	0.0	0.0	0.0	0.0
DESIGN - Site Constructors	0.0	0.0	0.0	0.0	0.0
DESIGN - Architecture/Engineering Contractors	0.0	0.0	0.0	0.0	0.0
DESIGN - Construction Contractor	0.0	0.0	0.0	0.0	0.0
CONSTRUCTION/D&D - Site Management/Operations	0.0	0.0	0.0	0.0	0.0
CONSTRUCTION/D&D - Site Infrastructure	0.0	0.0	0.0	0.0	0.0
CONSTRUCTION/D&D - National Laboratories	0.0	0.0	0.0	0.0	0.0
CONSTRUCTION/D&D - Site Constructors	0.0	0.0	0.0	0.0	0.0
CONSTRUCTION/D&D - Architecture/Engineering Contracto	0.0	0.0	0.0	0.0	0.0
CONSTRUCTION/D&D - Construction Contractor	0.0	0.0	0.0	0.0	0.0
OPERATIONS - Site Management/Operations	121.3	194.7	262.4	22.6	733.8
OPERATIONS - Site Infrastructure	21.4	34.4	46.3	4.0	129.5
OPERATIONS - National Laboratories	48.7	78.2	105.4	9.1	294.8
OPERATIONS - Site Constructors	0.0	0.0	0.0	0.0	0.0
OPERATIONS - Architecture/Engineering Contractors	0.0	0.0	0.0	0.0	0.0
OPERATIONS - Construction Contractor	0.0	0.0	0.0	0.0	0.0

Worker Category Base FTE (FTE)	FY06	FY07	FY08	FY09	FY10
Engineer/Management	34.0	54.6	73.6	6.3	205.7
Crafts	0.0	0.0	0.0	0.0	0.0
Maintenance	51.0	81.9	110.4	9.5	308.6
Operators	85.0	136.4	183.9	15.8	514.3
Infrastructure	21.4	34.4	46.3	4.0	129.5
Total	**191.5**	**307.2**	**414.1**	**35.6**	**1,158.1**

FUNCTION - ALTERNATIVE 2 HLWV	FY11	FY12	FY13	FY14	FY15	FY16	FY17
Technology Development (Test) Cost	0	0	0	0	0	0	0
Perform HLW Hot Operations First Year (Hot Test)	0	0	0	0	0	0	0
Perform HLW Cold Operations	0	0	0	0	0	0	0
Subtotal Test Costs	0	0	0	0	0	0	0
Test Oversight Costs	0	0	0	0	0	0	0
Total HLWV Base Costs	0	0	0	0	0	0	0
Total Alt 2 Reddick Costs							
LLWV % of Total Alt 2 Reddick Costs							
Alt 2 LLWV Reddick Costs	0	0	0	0	0	0	0
Alternative 2 HLWV Test Costs ($)	0	0	0	0	0	0	0

ALTERNATIVE 2 HLWV BASE COST BREAKDOWN	FY11	FY12	FY13	FY14	FY15	FY16	FY17
Activity % of Alternative 2 HLWV Base Costs (%)							
Studies/Permitting	0	0	0	0	0	0	0
Design	0	0	0	0	0	0	0
Construction/D&D	0	0	0	0	0	0	0
Operation	0	0	0	0	0	0	0
Total Percentage	0	0	0	0	0	0	0
Alternative 2 HLWV Base Costs($)							
Studies/Permitting	0	0	0	0	0	0	0
Design	0	0	0	0	0	0	0
Construction/D&D	0	0	0	0	0	0	0
Operation	0	0	0	0	0	0	0
Total Cost	0	0	0	0	0	0	0

ALTERNATIVE 2 HLWV BASE FTE BREAKDOWN	FY11	FY12	FY13	FY14	FY15	FY16	FY17
Contractor FTE per Alternative 2 HLWV Activity (FTE)							
STUDIES/PERMITTING - Site Management/Operations	0.0	0.0	0.0	0.0	0.0	0.0	0.0
STUDIES/PERMITTING - Site Infrastructure	0.0	0.0	0.0	0.0	0.0	0.0	0.0
STUDIES/PERMITTING - National Laboratories	0.0	0.0	0.0	0.0	0.0	0.0	0.0
STUDIES/PERMITTING - Site Constructors	0.0	0.0	0.0	0.0	0.0	0.0	0.0
STUDIES/PERMITTING - Architecture/Engineering Contract	0.0	0.0	0.0	0.0	0.0	0.0	0.0
STUDIES/PERMITTING - Construction Contractor	0.0	0.0	0.0	0.0	0.0	0.0	0.0
DESIGN - Site Management/Operations	0.0	0.0	0.0	0.0	0.0	0.0	0.0
DESIGN - Site Infrastructure	0.0	0.0	0.0	0.0	0.0	0.0	0.0
DESIGN - National Laboratories	0.0	0.0	0.0	0.0	0.0	0.0	0.0
DESIGN - Site Constructors	0.0	0.0	0.0	0.0	0.0	0.0	0.0
DESIGN - Architecture/Engineering Contractors	0.0	0.0	0.0	0.0	0.0	0.0	0.0
DESIGN - Construction Contractor	0.0	0.0	0.0	0.0	0.0	0.0	0.0
CONSTRUCTION/D&D - Site Management/Operations	0.0	0.0	0.0	0.0	0.0	0.0	0.0
CONSTRUCTION/D&D - Site Infrastructure	0.0	0.0	0.0	0.0	0.0	0.0	0.0
CONSTRUCTION/D&D - National Laboratories	0.0	0.0	0.0	0.0	0.0	0.0	0.0
CONSTRUCTION/D&D - Site Constructors	0.0	0.0	0.0	0.0	0.0	0.0	0.0
CONSTRUCTION/D&D - Architecture/Engineering Contracto	0.0	0.0	0.0	0.0	0.0	0.0	0.0
CONSTRUCTION/D&D - Construction Contractor	0.0	0.0	0.0	0.0	0.0	0.0	0.0
OPERATIONS - Site Management/Operations	0.0	0.0	0.0	0.0	0.0	0.0	0.0
OPERATIONS - Site Infrastructure	0.0	0.0	0.0	0.0	0.0	0.0	0.0
OPERATIONS - National Laboratories	0.0	0.0	0.0	0.0	0.0	0.0	0.0
OPERATIONS - Site Constructors	0.0	0.0	0.0	0.0	0.0	0.0	0.0
OPERATIONS - Architecture/Engineering Contractors	0.0	0.0	0.0	0.0	0.0	0.0	0.0
OPERATIONS - Construction Contractor	0.0	0.0	0.0	0.0	0.0	0.0	0.0

Worker Category Base FTE (FTE)	FY11	FY12	FY13	FY14	FY15	FY16	FY17
Engineer/Management	0.0	0.0	0.0	0.0	0.0	0.0	0.0
Crafts	0.0	0.0	0.0	0.0	0.0	0.0	0.0
Maintenance	0.0	0.0	0.0	0.0	0.0	0.0	0.0
Operators	0.0	0.0	0.0	0.0	0.0	0.0	0.0
Infrastructure	0.0	0.0	0.0	0.0	0.0	0.0	0.0
Total	0.0	0.0	0.0	0.0	0.0	0.0	0.0

FUNCTION - ALTERNATIVE 2 HLWV	FY18	FY19	FY20	FY21	FY22	FY23	FY24	FY25	FY26	FY27	FY28	FY29
Technology Development (Test) Cost	0	0	0	0	0	0	0	0	0	0	0	0
Perform HLW Hot Operations First Year (Hot Test)	0	0	0	0	0	0	0	0	0	0	0	0
Perform HLW Cold Operations	0	0	0	0	0	0	0	0	0	0	0	0
Subtotal Test Costs	0	0	0	0	0	0	0	0	0	0	0	0
Test Oversight Costs	0	0	0	0	0	0	0	0	0	0	0	0
Total HLWV Base Costs	0	0	0	0	0	0	0	0	0	0	0	0
Total Alt 2 Reddick Costs												
LLWV % of Total Alt 2 Reddick Costs												
Alt 2 LLWV Reddick Costs	0	0	0	0	0	0	0	0	0	0	0	0
Alternative 2 HLWV Test Costs ($)	0	0	0	0	0	0	0	0	0	0	0	0

ALTERNATIVE 2 HLWV BASE COST BREAKDOWN	FY18	FY19	FY20	FY21	FY22	FY23	FY24	FY25	FY26	FY27	FY28	FY29
Activity % of Alternative 2 HLWV Base Costs (%)												
Studies/Permitting	0	0	0	0	0	0	0	0	0	0	0	0
Design	0	0	0	0	0	0	0	0	0	0	0	0
Construction/D&D	0	0	0	0	0	0	0	0	0	0	0	0
Operation	0	0	0	0	0	0	0	0	0	0	0	0
Total Percentage	0	0	0	0	0	0	0	0	0	0	0	0
Alternative 2 HLWV Base Costs($)												
Studies/Permitting	0	0	0	0	0	0	0	0	0	0	0	0
Design	0	0	0	0	0	0	0	0	0	0	0	0
Construction/D&D	0	0	0	0	0	0	0	0	0	0	0	0
Operation	0	0	0	0	0	0	0	0	0	0	0	0
Total Cost	0	0	0	0	0	0	0	0	0	0	0	0

ALTERNATIVE 2 HLWV BASE FTE BREAKDOWN	FY18	FY19	FY20	FY21	FY22	FY23	FY24	FY25	FY26	FY27	FY28	FY29
Contractor FTE per Alternative 2 HLWV Activity (FTE)												
STUDIES/PERMITTING - Site Management/Operations	0.0	0.0	0.0	0.0	0.0	0.0	0.0	0.0	0.0	0.0	0.0	0.0
STUDIES/PERMITTING - Site Infrastructure	0.0	0.0	0.0	0.0	0.0	0.0	0.0	0.0	0.0	0.0	0.0	0.0
STUDIES/PERMITTING - National Laboratories	0.0	0.0	0.0	0.0	0.0	0.0	0.0	0.0	0.0	0.0	0.0	0.0
STUDIES/PERMITTING - Site Constructors	0.0	0.0	0.0	0.0	0.0	0.0	0.0	0.0	0.0	0.0	0.0	0.0
STUDIES/PERMITTING - Architecture/Engineering Contract	0.0	0.0	0.0	0.0	0.0	0.0	0.0	0.0	0.0	0.0	0.0	0.0
STUDIES/PERMITTING - Construction Contractor	0.0	0.0	0.0	0.0	0.0	0.0	0.0	0.0	0.0	0.0	0.0	0.0
DESIGN - Site Management/Operations	0.0	0.0	0.0	0.0	0.0	0.0	0.0	0.0	0.0	0.0	0.0	0.0
DESIGN - Site Infrastructure	0.0	0.0	0.0	0.0	0.0	0.0	0.0	0.0	0.0	0.0	0.0	0.0
DESIGN - National Laboratories	0.0	0.0	0.0	0.0	0.0	0.0	0.0	0.0	0.0	0.0	0.0	0.0
DESIGN - Site Constructors	0.0	0.0	0.0	0.0	0.0	0.0	0.0	0.0	0.0	0.0	0.0	0.0
DESIGN - Architecture/Engineering Contractors	0.0	0.0	0.0	0.0	0.0	0.0	0.0	0.0	0.0	0.0	0.0	0.0
DESIGN - Construction Contractor	0.0	0.0	0.0	0.0	0.0	0.0	0.0	0.0	0.0	0.0	0.0	0.0
CONSTRUCTION/D&D - Site Management/Operations	0.0	0.0	0.0	0.0	0.0	0.0	0.0	0.0	0.0	0.0	0.0	0.0
CONSTRUCTION/D&D - Site Infrastructure	0.0	0.0	0.0	0.0	0.0	0.0	0.0	0.0	0.0	0.0	0.0	0.0
CONSTRUCTION/D&D - National Laboratories	0.0	0.0	0.0	0.0	0.0	0.0	0.0	0.0	0.0	0.0	0.0	0.0
CONSTRUCTION/D&D - Site Constructors	0.0	0.0	0.0	0.0	0.0	0.0	0.0	0.0	0.0	0.0	0.0	0.0
CONSTRUCTION/D&D - Architecture/Engineering Contracto	0.0	0.0	0.0	0.0	0.0	0.0	0.0	0.0	0.0	0.0	0.0	0.0
CONSTRUCTION/D&D - Construction Contractor	0.0	0.0	0.0	0.0	0.0	0.0	0.0	0.0	0.0	0.0	0.0	0.0
OPERATIONS - Site Management/Operations	0.0	0.0	0.0	0.0	0.0	0.0	0.0	0.0	0.0	0.0	0.0	0.0
OPERATIONS - Site Infrastructure	0.0	0.0	0.0	0.0	0.0	0.0	0.0	0.0	0.0	0.0	0.0	0.0
OPERATIONS - National Laboratories	0.0	0.0	0.0	0.0	0.0	0.0	0.0	0.0	0.0	0.0	0.0	0.0
OPERATIONS - Site Constructors	0.0	0.0	0.0	0.0	0.0	0.0	0.0	0.0	0.0	0.0	0.0	0.0
OPERATIONS - Architecture/Engineering Contractors	0.0	0.0	0.0	0.0	0.0	0.0	0.0	0.0	0.0	0.0	0.0	0.0
OPERATIONS - Construction Contractor	0.0	0.0	0.0	0.0	0.0	0.0	0.0	0.0	0.0	0.0	0.0	0.0

Worker Category Base FTE (FTE)	FY18	FY19	FY20	FY21	FY22	FY23	FY24	FY25	FY26	FY27	FY28	FY29
Engineer/Management	0.0	0.0	0.0	0.0	0.0	0.0	0.0	0.0	0.0	0.0	0.0	0.0
Crafts	0.0	0.0	0.0	0.0	0.0	0.0	0.0	0.0	0.0	0.0	0.0	0.0
Maintenance	0.0	0.0	0.0	0.0	0.0	0.0	0.0	0.0	0.0	0.0	0.0	0.0
Operators	0.0	0.0	0.0	0.0	0.0	0.0	0.0	0.0	0.0	0.0	0.0	0.0
Infrastructure	0.0	0.0	0.0	0.0	0.0	0.0	0.0	0.0	0.0	0.0	0.0	0.0
Total	0.0	0.0	0.0	0.0	0.0	0.0	0.0	0.0	0.0	0.0	0.0	0.0

FUNCTION - ALTERNATIVE 2 HLWV	FY30	FY31	FY32	FY33	FY34	FY35	FY36	FY37	FY38	FY39	FY40
Technology Development (Test) Cost	0	0	0	0	0	0	0	0	0	0	0
Perform HLW Hot Operations First Year (Hot Test)	0	0	0	0	0	0	0	0	0	0	0
Perform HLW Cold Operations	0	0	0	0	0	0	0	0	0	0	0
Subtotal Test Costs	0	0	0	0	0	0	0	0	0	0	0
Test Oversight Costs	0	0	0	0	0	0	0	0	0	0	0
Total HLWV Base Costs	0	0	0	0	0	0	0	0	0	0	0
Total Alt 2 Reddick Costs											
LLWV % of Total Alt 2 Reddick Costs											
Alt 2 LLWV Reddick Costs	0	0	0	0	0	0	0	0	0	0	0
Alternative 2 HLWV Test Costs ($)	0	0	0	0	0	0	0	0	0	0	0

ALTERNATIVE 2 HLWV BASE COST BREAKDOWN	FY30	FY31	FY32	FY33	FY34	FY35	FY36	FY37	FY38	FY39	FY40
Activity % of Alternative 2 HLWV Base Costs (%)											
Studies/Permitting	0	0	0	0	0	0	0	0	0	0	0
Design	0	0	0	0	0	0	0	0	0	0	0
Construction/D&D	0	0	0	0	0	0	0	0	0	0	0
Operation	0	0	0	0	0	0	0	0	0	0	0
Total Percentage	0	0	0	0	0	0	0	0	0	0	0
Alternative 2 HLWV Base Costs($)											
Studies/Permitting	0	0	0	0	0	0	0	0	0	0	0
Design	0	0	0	0	0	0	0	0	0	0	0
Construction/D&D	0	0	0	0	0	0	0	0	0	0	0
Operation	0	0	0	0	0	0	0	0	0	0	0
Total Cost	0	0	0	0	0	0	0	0	0	0	0

ALTERNATIVE 2 HLWV BASE FTE BREAKDOWN	FY30	FY31	FY32	FY33	FY34	FY35	FY36	FY37	FY38	FY39	FY40
Contractor FTE per Alternative 2 HLWV Activity (FTE)											
STUDIES/PERMITTING - Site Management/Operations	0.0	0.0	0.0	0.0	0.0	0.0	0.0	0.0	0.0	0.0	0.0
STUDIES/PERMITTING - Site Infrastructure	0.0	0.0	0.0	0.0	0.0	0.0	0.0	0.0	0.0	0.0	0.0
STUDIES/PERMITTING - National Laboratories	0.0	0.0	0.0	0.0	0.0	0.0	0.0	0.0	0.0	0.0	0.0
STUDIES/PERMITTING - Site Constructors	0.0	0.0	0.0	0.0	0.0	0.0	0.0	0.0	0.0	0.0	0.0
STUDIES/PERMITTING - Architecture/Engineering Contract	0.0	0.0	0.0	0.0	0.0	0.0	0.0	0.0	0.0	0.0	0.0
STUDIES/PERMITTING - Construction Contractor	0.0	0.0	0.0	0.0	0.0	0.0	0.0	0.0	0.0	0.0	0.0
DESIGN - Site Management/Operations	0.0	0.0	0.0	0.0	0.0	0.0	0.0	0.0	0.0	0.0	0.0
DESIGN - Site Infrastructure	0.0	0.0	0.0	0.0	0.0	0.0	0.0	0.0	0.0	0.0	0.0
DESIGN - National Laboratories	0.0	0.0	0.0	0.0	0.0	0.0	0.0	0.0	0.0	0.0	0.0
DESIGN - Site Constructors	0.0	0.0	0.0	0.0	0.0	0.0	0.0	0.0	0.0	0.0	0.0
DESIGN - Architecture/Engineering Contractors	0.0	0.0	0.0	0.0	0.0	0.0	0.0	0.0	0.0	0.0	0.0
DESIGN - Construction Contractor	0.0	0.0	0.0	0.0	0.0	0.0	0.0	0.0	0.0	0.0	0.0
CONSTRUCTION/D&D - Site Management/Operations	0.0	0.0	0.0	0.0	0.0	0.0	0.0	0.0	0.0	0.0	0.0
CONSTRUCTION/D&D - Site Infrastructure	0.0	0.0	0.0	0.0	0.0	0.0	0.0	0.0	0.0	0.0	0.0
CONSTRUCTION/D&D - National Laboratories	0.0	0.0	0.0	0.0	0.0	0.0	0.0	0.0	0.0	0.0	0.0
CONSTRUCTION/D&D - Site Constructors	0.0	0.0	0.0	0.0	0.0	0.0	0.0	0.0	0.0	0.0	0.0
CONSTRUCTION/D&D - Architecture/Engineering Contracto	0.0	0.0	0.0	0.0	0.0	0.0	0.0	0.0	0.0	0.0	0.0
CONSTRUCTION/D&D - Construction Contractor	0.0	0.0	0.0	0.0	0.0	0.0	0.0	0.0	0.0	0.0	0.0
OPERATIONS - Site Management/Operations	0.0	0.0	0.0	0.0	0.0	0.0	0.0	0.0	0.0	0.0	0.0
OPERATIONS - Site Infrastructure	0.0	0.0	0.0	0.0	0.0	0.0	0.0	0.0	0.0	0.0	0.0
OPERATIONS - National Laboratories	0.0	0.0	0.0	0.0	0.0	0.0	0.0	0.0	0.0	0.0	0.0
OPERATIONS - Site Constructors	0.0	0.0	0.0	0.0	0.0	0.0	0.0	0.0	0.0	0.0	0.0
OPERATIONS - Architecture/Engineering Contractors	0.0	0.0	0.0	0.0	0.0	0.0	0.0	0.0	0.0	0.0	0.0
OPERATIONS - Construction Contractor	0.0	0.0	0.0	0.0	0.0	0.0	0.0	0.0	0.0	0.0	0.0

Worker Category Base FTE (FTE)	FY30	FY31	FY32	FY33	FY34	FY35	FY36	FY37	FY38	FY39	FY40
Engineer/Management	0.0	0.0	0.0	0.0	0.0	0.0	0.0	0.0	0.0	0.0	0.0
Crafts	0.0	0.0	0.0	0.0	0.0	0.0	0.0	0.0	0.0	0.0	0.0
Maintenance	0.0	0.0	0.0	0.0	0.0	0.0	0.0	0.0	0.0	0.0	0.0
Operators	0.0	0.0	0.0	0.0	0.0	0.0	0.0	0.0	0.0	0.0	0.0
Infrastructure	0.0	0.0	0.0	0.0	0.0	0.0	0.0	0.0	0.0	0.0	0.0
Total	0.0	0.0	0.0	0.0	0.0	0.0	0.0	0.0	0.0	0.0	0.0

FUNCTION - ALTERNATIVE 2 HLWV	Totals
Technology Development (Test) Cost	47,129,988
Perform HLW Hot Operations First Year (Hot Test)	219,742,768
Perform HLW Cold Operations	197,110,095
Subtotal Test Costs	463,982,851
Test Oversight Costs	0
Total HLWV Base Costs	463,982,851
Total Alt 2 Reddick Costs	978,000,000
LLWV % of Total Alt 2 Reddick Costs	832
Alt 2 LLWV Reddick Costs	508,560,000
Alternative 2 HLWV Test Costs ($)	972,542,851

ALTERNATIVE 2 HLWV BASE COST BREAKDOWN

Activity % of Alternative 2 HLWV Base Costs (%)	
Studies/Permitting	
Design	
Construction/D&D	
Operation	
Total Percentage	

Alternative 2 HLWV Base Costs($)	**Totals**
Studies/Permitting	20,217,575
Design	1,534,211
Construction/D&D	4,656,788
Operation	437,574,277
Total Cost	463,982,851

ALTERNATIVE 2 HLWV BASE FTE BREAKDOWN	**Totals**
Contractor FTE per Alternative 2 HLWV Activity (FTE)	
STUDIES/PERMITTING - Site Management/Operations	92.1
STUDIES/PERMITTING - Site Infrastructure	16.2
STUDIES/PERMITTING - National Laboratories	27.1
STUDIES/PERMITTING - Site Constructors	0.0
STUDIES/PERMITTING - Architecture/Engineering Contract	0.0
STUDIES/PERMITTING - Construction Contractor	0.0
DESIGN - Site Management/Operations	0.9
DESIGN - Site Infrastructure	0.2
DESIGN - National Laboratories	0.8
DESIGN - Site Constructors	0.5
DESIGN - Architecture/Engineering Contractors	6.4
DESIGN - Construction Contractor	0.0
CONSTRUCTION/D&D - Site Management/Operations	1.4
CONSTRUCTION/D&D - Site Infrastructure	0.2
CONSTRUCTION/D&D - National Laboratories	1.2
CONSTRUCTION/D&D - Site Constructors	1.7
CONSTRUCTION/D&D - Architecture/Engineering Contracto	1.3
CONSTRUCTION/D&D - Construction Contractor	27.4
OPERATIONS - Site Management/Operations	1,461.2
OPERATIONS - Site Infrastructure	257.9
OPERATIONS - National Laboratories	587.0
OPERATIONS - Site Constructors	0.0
OPERATIONS - Architecture/Engineering Contractors	0.0
OPERATIONS - Construction Contractor	0.0

Worker Category Base FTE (FTE)	**Totals**
Engineer/Management	548.3
Crafts	22.2
Maintenance	614.5
Operators	1,024.1
Infrastructure	274.5
Total	2,483.6

ALTERNATIVE 2 HLWV REDDICK COST BREAKDOWN	FY95	FY96	FY97	FY98	FY99	FY00
Activity % of Alternative 2 HLWV Reddick Costs (%)						
Studies/Permitting	100	100	100	10	10	10
Design	0	0	0	90	90	90
Construction/D&D	0	0	0	0	0	0
Operation	0	0	0	0	0	0
Total Percentage	**100**	**100**	**100**	**100**	**100**	**100**
Alternative 2 HLWV Reddick Costs($)						
Studies/Permitting	1,040,000	1,040,000	3,120,000	520,000	1,976,000	1,976,000
Design	0	0	0	4,680,000	17,784,000	17,784,000
Construction/D&D	0	0	0	0	0	0
Operation	0	0	0	0	0	0
Total Cost	**1,040,000**	**1,040,000**	**3,120,000**	**5,200,000**	**19,760,000**	**19,760,000**

ALTERNATIVE 2 HLWV REDDICK FTE BREAKDOWN	FY95	FY96	FY97	FY98	FY99	FY00
Contractor FTE per Alternative 2 HLWV Activity (FTE)						
STUDIES/PERMITTING - Site Management/Operations	6.0	6.0	18.0	3.0	11.4	11.4
STUDIES/PERMITTING - Site Infrastructure	1.1	1.1	3.2	0.5	2.0	2.0
STUDIES/PERMITTING - National Laboratories	0.3	0.3	0.8	0.1	0.5	0.5
STUDIES/PERMITTING - Site Constructors	0.0	0.0	0.0	0.0	0.0	0.0
STUDIES/PERMITTING - Architecture/Engineering Contract	0.0	0.0	0.0	0.0	0.0	0.0
STUDIES/PERMITTING - Construction Contractor	0.0	0.0	0.0	0.0	0.0	0.0
DESIGN - Site Management/Operations	0.0	0.0	0.0	2.8	10.8	10.8
DESIGN - Site Infrastructure	0.0	0.0	0.0	0.5	1.9	1.9
DESIGN - National Laboratories	0.0	0.0	0.0	2.5	9.5	9.5
DESIGN - Site Constructors	0.0	0.0	0.0	1.7	6.4	6.4
DESIGN - Architecture/Engineering Contractors	0.0	0.0	0.0	19.5	74.1	74.1
DESIGN - Construction Contractor	0.0	0.0	0.0	0.0	0.0	0.0
CONSTRUCTION/D&D - Site Management/Operations	0.0	0.0	0.0	0.0	0.0	0.0
CONSTRUCTION/D&D - Site Infrastructure	0.0	0.0	0.0	0.0	0.0	0.0
CONSTRUCTION/D&D - National Laboratories	0.0	0.0	0.0	0.0	0.0	0.0
CONSTRUCTION/D&D - Site Constructors	0.0	0.0	0.0	0.0	0.0	0.0
CONSTRUCTION/D&D - Architecture/Engineering Contracto	0.0	0.0	0.0	0.0	0.0	0.0
CONSTRUCTION/D&D - Construction Contractor	0.0	0.0	0.0	0.0	0.0	0.0
OPERATIONS - Site Management/Operations	0.0	0.0	0.0	0.0	0.0	0.0
OPERATIONS - Site Infrastructure	0.0	0.0	0.0	0.0	0.0	0.0
OPERATIONS - National Laboratories	0.0	0.0	0.0	0.0	0.0	0.0
OPERATIONS - Site Constructors	0.0	0.0	0.0	0.0	0.0	0.0
OPERATIONS - Architecture/Engineering Contractors	0.0	0.0	0.0	0.0	0.0	0.0
OPERATIONS - Construction Contractor	0.0	0.0	0.0	0.0	0.0	0.0
Worker Category Reddick FTE (FTE)						
Engineer/Management	6.3	6.3	18.8	29.7	112.7	112.7
Crafts	0.0	0.0	0.0	0.0	0.0	0.0
Maintenance	0.0	0.0	0.0	0.0	0.0	0.0
Operators	0.0	0.0	0.0	0.0	0.0	0.0
Infrastructure	1.1	1.1	3.2	1.0	3.9	3.9
Total	**7.3**	**7.3**	**22.0**	**30.7**	**116.6**	**116.6**

ALTERNATIVE 2 HLWV COST SUMMARY	FY95	FY96	FY97	FY98	FY99	FY00
Studies/Permitting	7,152,047	8,735,852	9,248,623	801,052	1,976,000	1,976,000
Design	679,116	855,095	0	4,680,000	17,784,000	17,784,000
Construction/D&D	1,358,233	1,710,189	1,532,156	56,210	0	0
Operation	5,432,931	6,840,758	7,660,779	786,946	0	0
Total	14,622,327	18,141,894	18,441,558	6,324,209	19,760,000	19,760,000

ALTERNATIVE 2 HLWV FTE SUMMARY	FY95	FY96	FY97	FY98	FY99	FY00
Engineer/Management	54.4	66.8	65.7	32.2	112.7	112.7
Crafts	6.5	8.2	7.3	0.3	0.0	0.0
Maintenance	7.6	9.6	10.8	1.1	0.0	0.0
Operators	12.7	16.0	17.9	1.8	0.0	0.0
Infrastructure	9.3	11.5	12.7	1.7	3.9	3.9
Total	90.5	112.1	114.4	37.1	116.6	116.6

ALTERNATIVE 2 HLWV REDDICK COST BREAKDOWN	FY01	FY02	FY03	FY04	FY05
Activity % of Alternative 2 HLWV Reddick Costs (%)					
Studies/Permitting	10	0	0	0	0
Design	40	0	0	0	0
Construction/D&D	50	100	100	65	30
Operation	0	0	0	35	70
Total Percentage	**100**	**100**	**100**	**100**	**100**
Alternative 2 HLWV Reddick Costs($)					
Studies/Permitting	2,028,000	0	0	0	0
Design	8,112,000	0	0	0	0
Construction/D&D	10,140,000	39,520,000	52,520,000	35,828,000	18,720,000
Operation	0	0	0	19,292,000	43,680,000
Total Cost	**20,280,000**	**39,520,000**	**52,520,000**	**55,120,000**	**62,400,000**

ALTERNATIVE 2 HLWV REDDICK FTE BREAKDOWN	FY01	FY02	FY03	FY04	FY05
Contractor FTE per Alternative 2 HLWV Activity (FTE)					
STUDIES/PERMITTING - Site Management/Operations	11.7	0.0	0.0	0.0	0.0
STUDIES/PERMITTING - Site Infrastructure	2.1	0.0	0.0	0.0	0.0
STUDIES/PERMITTING - National Laboratories	0.5	0.0	0.0	0.0	0.0
STUDIES/PERMITTING - Site Constructors	0.0	0.0	0.0	0.0	0.0
STUDIES/PERMITTING - Architecture/Engineering Contract	0.0	0.0	0.0	0.0	0.0
STUDIES/PERMITTING - Construction Contractor	0.0	0.0	0.0	0.0	0.0
DESIGN - Site Management/Operations	4.9	0.0	0.0	0.0	0.0
DESIGN - Site Infrastructure	0.9	0.0	0.0	0.0	0.0
DESIGN - National Laboratories	4.4	0.0	0.0	0.0	0.0
DESIGN - Site Constructors	2.9	0.0	0.0	0.0	0.0
DESIGN - Architecture/Engineering Contractors	33.8	0.0	0.0	0.0	0.0
DESIGN - Construction Contractor	0.0	0.0	0.0	0.0	0.0
CONSTRUCTION/D&D - Site Management/Operations	6.2	24.0	31.9	21.8	11.4
CONSTRUCTION/D&D - Site Infrastructure	1.1	4.2	5.6	3.8	2.0
CONSTRUCTION/D&D - National Laboratories	0.0	0.0	0.0	0.0	0.0
CONSTRUCTION/D&D - Site Constructors	3.6	14.1	18.8	12.8	6.7
CONSTRUCTION/D&D - Architecture/Engineering Contracto	2.8	11.0	14.6	10.0	5.2
CONSTRUCTION/D&D - Construction Contractor	59.6	232.5	308.9	210.8	110.1
OPERATIONS - Site Management/Operations	0.0	0.0	0.0	82.0	185.6
OPERATIONS - Site Infrastructure	0.0	0.0	0.0	14.5	32.8
OPERATIONS - National Laboratories	0.0	0.0	0.0	10.4	23.4
OPERATIONS - Site Constructors	0.0	0.0	0.0	0.0	0.0
OPERATIONS - Architecture/Engineering Contractors	0.0	0.0	0.0	0.0	0.0
OPERATIONS - Construction Contractor	0.0	0.0	0.0	0.0	0.0
Worker Category Reddick FTE (FTE)					
Engineer/Management	82.0	92.8	123.3	102.6	85.8
Crafts	48.4	188.8	250.9	171.2	89.4
Maintenance	0.0	0.0	0.0	27.7	62.7
Operators	0.0	0.0	0.0	46.2	104.5
Infrastructure	4.0	4.2	5.6	18.3	34.8
Total	**134.5**	**285.8**	**379.8**	**365.9**	**377.2**

ALTERNATIVE 2 HLWV COST SUMMARY	FY01	FY02	FY03	FY04	FY05
Studies/Permitting	2,028,000	0	0	0	0
Design	8,112,000	0	0	0	0
Construction/D&D	10,140,000	39,520,000	52,520,000	35,828,000	18,720,000
Operation	0	0	0	20,149,272	59,982,120
Total	20,280,000	39,520,000	52,520,000	55,977,272	78,682,120

ALTERNATIVE 2 HLWV FTE SUMMARY	FY01	FY02	FY03	FY04	FY05
Engineer/Management	82.0	92.8	123.3	103.4	101.0
Crafts	48.4	188.8	250.9	171.2	89.4
Maintenance	0.0	0.0	0.0	28.9	85.6
Operators	0.0	0.0	0.0	48.2	142.6
Infrastructure	4.0	4.2	5.6	18.8	44.4
Total	134.5	285.8	379.8	370.4	463.0

ALTERNATIVE 2 HLWV REDDICK COST BREAKDOWN	FY06	FY07	FY08	FY09	FY10
Activity % of Alternative 2 HLWV Reddick Costs (%)					
Studies/Permitting	0	0	0	0	0
Design	0	0	0	0	0
Construction/D&D	0	0	0	0	0
Operation	100	100	100	100	100
Total Percentage	**100**	**100**	**100**	**100**	**100**
Alternative 2 HLWV Reddick Costs($)					
Studies/Permitting	0	0	0	0	0
Design	0	0	0	0	0
Construction/D&D	0	0	0	0	0
Operation	41,600,000	49,400,000	49,400,000	44,200,000	44,200,000
Total Cost	**41,600,000**	**49,400,000**	**49,400,000**	**44,200,000**	**44,200,000**

ALTERNATIVE 2 HLWV REDDICK FTE BREAKDOWN	FY06	FY07	FY08	FY09	FY10
Contractor FTE per Alternative 2 HLWV Activity (FTE)					
STUDIES/PERMITTING - Site Management/Operations	0.0	0.0	0.0	0.0	0.0
STUDIES/PERMITTING - Site Infrastructure	0.0	0.0	0.0	0.0	0.0
STUDIES/PERMITTING - National Laboratories	0.0	0.0	0.0	0.0	0.0
STUDIES/PERMITTING - Site Constructors	0.0	0.0	0.0	0.0	0.0
STUDIES/PERMITTING - Architecture/Engineering Contract	0.0	0.0	0.0	0.0	0.0
STUDIES/PERMITTING - Construction Contractor	0.0	0.0	0.0	0.0	0.0
DESIGN - Site Management/Operations	0.0	0.0	0.0	0.0	0.0
DESIGN - Site Infrastructure	0.0	0.0	0.0	0.0	0.0
DESIGN - National Laboratories	0.0	0.0	0.0	0.0	0.0
DESIGN - Site Constructors	0.0	0.0	0.0	0.0	0.0
DESIGN - Architecture/Engineering Contractors	0.0	0.0	0.0	0.0	0.0
DESIGN - Construction Contractor	0.0	0.0	0.0	0.0	0.0
CONSTRUCTION/D&D - Site Management/Operations	0.0	0.0	0.0	0.0	0.0
CONSTRUCTION/D&D - Site Infrastructure	0.0	0.0	0.0	0.0	0.0
CONSTRUCTION/D&D - National Laboratories	0.0	0.0	0.0	0.0	0.0
CONSTRUCTION/D&D - Site Constructors	0.0	0.0	0.0	0.0	0.0
CONSTRUCTION/D&D - Architecture/Engineering Contracto	0.0	0.0	0.0	0.0	0.0
CONSTRUCTION/D&D - Construction Contractor	0.0	0.0	0.0	0.0	0.0
OPERATIONS - Site Management/Operations	176.8	210.0	210.0	187.9	187.9
OPERATIONS - Site Infrastructure	31.2	37.1	37.1	33.2	33.2
OPERATIONS - National Laboratories	22.3	26.5	26.5	23.7	23.7
OPERATIONS - Site Constructors	0.0	0.0	0.0	0.0	0.0
OPERATIONS - Architecture/Engineering Contractors	0.0	0.0	0.0	0.0	0.0
OPERATIONS - Construction Contractor	0.0	0.0	0.0	0.0	0.0
Worker Category Reddick FTE (FTE)					
Engineer/Management	39.8	47.3	47.3	42.3	42.3
Crafts	0.0	0.0	0.0	0.0	0.0
Maintenance	59.7	70.9	70.9	63.5	63.5
Operators	99.6	118.2	118.2	105.8	105.8
Infrastructure	31.2	37.1	37.1	33.2	33.2
Total	**230.3**	**273.5**	**273.5**	**244.7**	**244.7**

ALTERNATIVE 2 HLWV COST SUMMARY	FY06	FY07	FY08	FY09	FY10
Studies/Permitting	0	0	0	0	0
Design	0	0	0	0	0
Construction/D&D	0	0	0	0	0
Operation	77,934,800	107,698,612	127,984,160	50,953,131	263,942,768
Total	77,934,800	107,698,612	127,984,160	50,953,131	263,942,768

ALTERNATIVE 2 HLWV FTE SUMMARY	FY06	FY07	FY08	FY09	FY10
Engineer/Management	73.8	101.9	120.9	48.6	248.0
Crafts	0.0	0.0	0.0	0.0	0.0
Maintenance	110.8	152.8	181.3	73.0	372.0
Operators	184.6	254.7	302.1	121.6	620.1
Infrastructure	52.6	71.4	83.4	37.1	162.6
Total	421.8	580.7	687.7	280.3	1,402.8

ALTERNATIVE 2 HLWV REDDICK COST BREAKDOWN	FY11	FY12	FY13	FY14	FY15	FY16	FY17
Activity % of Alternative 2 HLWV Reddick Costs (%)							
Studies/Permitting	0	0	0	0	0	0	0
Design	0	0	0	0	0	0	0
Construction/D&D	0	0	0	0	0	0	0
Operation	0	0	0	0	0	0	0
Total Percentage	0	0	0	0	0	0	0
Alternative 2 HLWV Reddick Costs($)							
Studies/Permitting	0	0	0	0	0	0	0
Design	0	0	0	0	0	0	0
Construction/D&D	0	0	0	0	0	0	0
Operation	0	0	0	0	0	0	0
Total Cost	0	0	0	0	0	0	0

ALTERNATIVE 2 HLWV REDDICK FTE BREAKDOWN	FY11	FY12	FY13	FY14	FY15	FY16	FY17
Contractor FTE per Alternative 2 HLWV Activity (FTE)							
STUDIES/PERMITTING - Site Management/Operations	0.0	0.0	0.0	0.0	0.0	0.0	0.0
STUDIES/PERMITTING - Site Infrastructure	0.0	0.0	0.0	0.0	0.0	0.0	0.0
STUDIES/PERMITTING - National Laboratories	0.0	0.0	0.0	0.0	0.0	0.0	0.0
STUDIES/PERMITTING - Site Constructors	0.0	0.0	0.0	0.0	0.0	0.0	0.0
STUDIES/PERMITTING - Architecture/Engineering Contract	0.0	0.0	0.0	0.0	0.0	0.0	0.0
STUDIES/PERMITTING - Construction Contractor	0.0	0.0	0.0	0.0	0.0	0.0	0.0
DESIGN - Site Management/Operations	0.0	0.0	0.0	0.0	0.0	0.0	0.0
DESIGN - Site Infrastructure	0.0	0.0	0.0	0.0	0.0	0.0	0.0
DESIGN - National Laboratories	0.0	0.0	0.0	0.0	0.0	0.0	0.0
DESIGN - Site Constructors	0.0	0.0	0.0	0.0	0.0	0.0	0.0
DESIGN - Architecture/Engineering Contractors	0.0	0.0	0.0	0.0	0.0	0.0	0.0
DESIGN - Construction Contractor	0.0	0.0	0.0	0.0	0.0	0.0	0.0
CONSTRUCTION/D&D - Site Management/Operations	0.0	0.0	0.0	0.0	0.0	0.0	0.0
CONSTRUCTION/D&D - Site Infrastructure	0.0	0.0	0.0	0.0	0.0	0.0	0.0
CONSTRUCTION/D&D - National Laboratories	0.0	0.0	0.0	0.0	0.0	0.0	0.0
CONSTRUCTION/D&D - Site Constructors	0.0	0.0	0.0	0.0	0.0	0.0	0.0
CONSTRUCTION/D&D - Architecture/Engineering Contracto	0.0	0.0	0.0	0.0	0.0	0.0	0.0
CONSTRUCTION/D&D - Construction Contractor	0.0	0.0	0.0	0.0	0.0	0.0	0.0
OPERATIONS - Site Management/Operations	0.0	0.0	0.0	0.0	0.0	0.0	0.0
OPERATIONS - Site Infrastructure	0.0	0.0	0.0	0.0	0.0	0.0	0.0
OPERATIONS - National Laboratories	0.0	0.0	0.0	0.0	0.0	0.0	0.0
OPERATIONS - Site Constructors	0.0	0.0	0.0	0.0	0.0	0.0	0.0
OPERATIONS - Architecture/Engineering Contractors	0.0	0.0	0.0	0.0	0.0	0.0	0.0
OPERATIONS - Construction Contractor	0.0	0.0	0.0	0.0	0.0	0.0	0.0
Worker Category Reddick FTE (FTE)							
Engineer/Management	0.0	0.0	0.0	0.0	0.0	0.0	0.0
Crafts	0.0	0.0	0.0	0.0	0.0	0.0	0.0
Maintenance	0.0	0.0	0.0	0.0	0.0	0.0	0.0
Operators	0.0	0.0	0.0	0.0	0.0	0.0	0.0
Infrastructure	0.0	0.0	0.0	0.0	0.0	0.0	0.0
Total	0.0	0.0	0.0	0.0	0.0	0.0	0.0

ALTERNATIVE 2 HLWV COST SUMMARY	FY11	FY12	FY13	FY14	FY15	FY16	FY17
Studies/Permitting	0	0	0	0	0	0	0
Design	0	0	0	0	0	0	0
Construction/D&D	0	0	0	0	0	0	0
Operation	0	0	0	0	0	0	0
Total	0	0	0	0	0	0	0

ALTERNATIVE 2 HLWV FTE SUMMARY	FY11	FY12	FY13	FY14	FY15	FY16	FY17
Engineer/Management	0.0	0.0	0.0	0.0	0.0	0.0	0.0
Crafts	0.0	0.0	0.0	0.0	0.0	0.0	0.0
Maintenance	0.0	0.0	0.0	0.0	0.0	0.0	0.0
Operators	0.0	0.0	0.0	0.0	0.0	0.0	0.0
Infrastructure	0.0	0.0	0.0	0.0	0.0	0.0	0.0
Total	0.0	0.0	0.0	0.0	0.0	0.0	0.0

ALTERNATIVE 2 HLWV REDDICK COST BREAKDOWN	FY18	FY19	FY20	FY21	FY22	FY23	FY24	FY25	FY26	FY27	FY28	FY29
Activity % of Alternative 2 HLWV Reddick Costs (%)												
Studies/Permitting	0	0	0	0	0	0	0	0	0	0	0	0
Design	0	0	0	0	0	0	0	0	0	0	0	0
Construction/D&D	0	0	0	0	0	0	0	0	0	0	0	0
Operation	0	0	0	0	0	0	0	0	0	0	0	0
Total Percentage	0	0	0	0	0	0	0	0	0	0	0	0
Alternative 2 HLWV Reddick Costs($)												
Studies/Permitting	0	0	0	0	0	0	0	0	0	0	0	0
Design	0	0	0	0	0	0	0	0	0	0	0	0
Construction/D&D	0	0	0	0	0	0	0	0	0	0	0	0
Operation	0	0	0	0	0	0	0	0	0	0	0	0
Total Cost	0	0	0	0	0	0	0	0	0	0	0	0

ALTERNATIVE 2 HLWV REDDICK FTE BREAKDOWN	FY18	FY19	FY20	FY21	FY22	FY23	FY24	FY25	FY26	FY27	FY28	FY29
Contractor FTE per Alternative 2 HLWV Activity (FTE)												
STUDIES/PERMITTING - Site Management/Operations	0.0	0.0	0.0	0.0	0.0	0.0	0.0	0.0	0.0	0.0	0.0	0.0
STUDIES/PERMITTING - Site Infrastructure	0.0	0.0	0.0	0.0	0.0	0.0	0.0	0.0	0.0	0.0	0.0	0.0
STUDIES/PERMITTING - National Laboratories	0.0	0.0	0.0	0.0	0.0	0.0	0.0	0.0	0.0	0.0	0.0	0.0
STUDIES/PERMITTING - Site Constructors	0.0	0.0	0.0	0.0	0.0	0.0	0.0	0.0	0.0	0.0	0.0	0.0
STUDIES/PERMITTING - Architecture/Engineering Contract	0.0	0.0	0.0	0.0	0.0	0.0	0.0	0.0	0.0	0.0	0.0	0.0
STUDIES/PERMITTING - Construction Contractor	0.0	0.0	0.0	0.0	0.0	0.0	0.0	0.0	0.0	0.0	0.0	0.0
DESIGN - Site Management/Operations	0.0	0.0	0.0	0.0	0.0	0.0	0.0	0.0	0.0	0.0	0.0	0.0
DESIGN - Site Infrastructure	0.0	0.0	0.0	0.0	0.0	0.0	0.0	0.0	0.0	0.0	0.0	0.0
DESIGN - National Laboratories	0.0	0.0	0.0	0.0	0.0	0.0	0.0	0.0	0.0	0.0	0.0	0.0
DESIGN - Site Constructors	0.0	0.0	0.0	0.0	0.0	0.0	0.0	0.0	0.0	0.0	0.0	0.0
DESIGN - Architecture/Engineering Contractors	0.0	0.0	0.0	0.0	0.0	0.0	0.0	0.0	0.0	0.0	0.0	0.0
DESIGN - Construction Contractor	0.0	0.0	0.0	0.0	0.0	0.0	0.0	0.0	0.0	0.0	0.0	0.0
CONSTRUCTION/D&D - Site Management/Operations	0.0	0.0	0.0	0.0	0.0	0.0	0.0	0.0	0.0	0.0	0.0	0.0
CONSTRUCTION/D&D - Site Infrastructure	0.0	0.0	0.0	0.0	0.0	0.0	0.0	0.0	0.0	0.0	0.0	0.0
CONSTRUCTION/D&D - National Laboratories	0.0	0.0	0.0	0.0	0.0	0.0	0.0	0.0	0.0	0.0	0.0	0.0
CONSTRUCTION/D&D - Site Constructors	0.0	0.0	0.0	0.0	0.0	0.0	0.0	0.0	0.0	0.0	0.0	0.0
CONSTRUCTION/D&D - Architecture/Engineering Contracto	0.0	0.0	0.0	0.0	0.0	0.0	0.0	0.0	0.0	0.0	0.0	0.0
CONSTRUCTION/D&D - Construction Contractor	0.0	0.0	0.0	0.0	0.0	0.0	0.0	0.0	0.0	0.0	0.0	0.0
OPERATIONS - Site Management/Operations	0.0	0.0	0.0	0.0	0.0	0.0	0.0	0.0	0.0	0.0	0.0	0.0
OPERATIONS - Site Infrastructure	0.0	0.0	0.0	0.0	0.0	0.0	0.0	0.0	0.0	0.0	0.0	0.0
OPERATIONS - National Laboratories	0.0	0.0	0.0	0.0	0.0	0.0	0.0	0.0	0.0	0.0	0.0	0.0
OPERATIONS - Site Constructors	0.0	0.0	0.0	0.0	0.0	0.0	0.0	0.0	0.0	0.0	0.0	0.0
OPERATIONS - Architecture/Engineering Contractors	0.0	0.0	0.0	0.0	0.0	0.0	0.0	0.0	0.0	0.0	0.0	0.0
OPERATIONS - Construction Contractor	0.0	0.0	0.0	0.0	0.0	0.0	0.0	0.0	0.0	0.0	0.0	0.0
Worker Category Reddick FTE (FTE)												
Engineer/Management	0.0	0.0	0.0	0.0	0.0	0.0	0.0	0.0	0.0	0.0	0.0	0.0
Crafts	0.0	0.0	0.0	0.0	0.0	0.0	0.0	0.0	0.0	0.0	0.0	0.0
Maintenance	0.0	0.0	0.0	0.0	0.0	0.0	0.0	0.0	0.0	0.0	0.0	0.0
Operators	0.0	0.0	0.0	0.0	0.0	0.0	0.0	0.0	0.0	0.0	0.0	0.0
Infrastructure	0.0	0.0	0.0	0.0	0.0	0.0	0.0	0.0	0.0	0.0	0.0	0.0
Total	0.0	0.0	0.0	0.0	0.0	0.0	0.0	0.0	0.0	0.0	0.0	0.0

ALTERNATIVE 2 HLWV COST SUMMARY	FY18	FY19	FY20	FY21	FY22	FY23	FY24	FY25	FY26	FY27	FY28	FY29
Studies/Permitting	0	0	0	0	0	0	0	0	0	0	0	0
Design	0	0	0	0	0	0	0	0	0	0	0	0
Construction/D&D	0	0	0	0	0	0	0	0	0	0	0	0
Operation	0	0	0	0	0	0	0	0	0	0	0	0
Total	0	0	0	0	0	0	0	0	0	0	0	0

ALTERNATIVE 2 HLWV FTE SUMMARY	FY18	FY19	FY20	FY21	FY22	FY23	FY24	FY25	FY26	FY27	FY28	FY29
Engineer/Management	0.0	0.0	0.0	0.0	0.0	0.0	0.0	0.0	0.0	0.0	0.0	0.0
Crafts	0.0	0.0	0.0	0.0	0.0	0.0	0.0	0.0	0.0	0.0	0.0	0.0
Maintenance	0.0	0.0	0.0	0.0	0.0	0.0	0.0	0.0	0.0	0.0	0.0	0.0
Operators	0.0	0.0	0.0	0.0	0.0	0.0	0.0	0.0	0.0	0.0	0.0	0.0
Infrastructure	0.0	0.0	0.0	0.0	0.0	0.0	0.0	0.0	0.0	0.0	0.0	0.0
Total	0.0	0.0	0.0	0.0	0.0	0.0	0.0	0.0	0.0	0.0	0.0	0.0

ALTERNATIVE 2 HLWV REDDICK COST BREAKDOWN	FY30	FY31	FY32	FY33	FY34	FY35	FY36	FY37	FY38	FY39	FY40
Activity % of Alternative 2 HLWV Reddick Costs (%)											
Studies/Permitting	0	0	0	0	0	0	0	0	0	0	0
Design	0	0	0	0	0	0	0	0	0	0	0
Construction/D&D	0	0	0	0	0	0	0	0	0	0	0
Operation	0	0	0	0	0	0	0	0	0	0	0
Total Percentage	0	0	0	0	0	0	0	0	0	0	0
Alternative 2 HLWV Reddick Costs($)											
Studies/Permitting	0	0	0	0	0	0	0	0	0	0	0
Design	0	0	0	0	0	0	0	0	0	0	0
Construction/D&D	0	0	0	0	0	0	0	0	0	0	0
Operation	0	0	0	0	0	0	0	0	0	0	0
Total Cost	0	0	0	0	0	0	0	0	0	0	0

ALTERNATIVE 2 HLWV REDDICK FTE BREAKDOWN	FY30	FY31	FY32	FY33	FY34	FY35	FY36	FY37	FY38	FY39	FY40
Contractor FTE per Alternative 2 HLWV Activity (FTE)											
STUDIES/PERMITTING - Site Management/Operations	0.0	0.0	0.0	0.0	0.0	0.0	0.0	0.0	0.0	0.0	0.0
STUDIES/PERMITTING - Site Infrastructure	0.0	0.0	0.0	0.0	0.0	0.0	0.0	0.0	0.0	0.0	0.0
STUDIES/PERMITTING - National Laboratories	0.0	0.0	0.0	0.0	0.0	0.0	0.0	0.0	0.0	0.0	0.0
STUDIES/PERMITTING - Site Constructors	0.0	0.0	0.0	0.0	0.0	0.0	0.0	0.0	0.0	0.0	0.0
STUDIES/PERMITTING - Architecture/Engineering Contract	0.0	0.0	0.0	0.0	0.0	0.0	0.0	0.0	0.0	0.0	0.0
STUDIES/PERMITTING - Construction Contractor	0.0	0.0	0.0	0.0	0.0	0.0	0.0	0.0	0.0	0.0	0.0
DESIGN - Site Management/Operations	0.0	0.0	0.0	0.0	0.0	0.0	0.0	0.0	0.0	0.0	0.0
DESIGN - Site Infrastructure	0.0	0.0	0.0	0.0	0.0	0.0	0.0	0.0	0.0	0.0	0.0
DESIGN - National Laboratories	0.0	0.0	0.0	0.0	0.0	0.0	0.0	0.0	0.0	0.0	0.0
DESIGN - Site Constructors	0.0	0.0	0.0	0.0	0.0	0.0	0.0	0.0	0.0	0.0	0.0
DESIGN - Architecture/Engineering Contractors	0.0	0.0	0.0	0.0	0.0	0.0	0.0	0.0	0.0	0.0	0.0
DESIGN - Construction Contractor	0.0	0.0	0.0	0.0	0.0	0.0	0.0	0.0	0.0	0.0	0.0
CONSTRUCTION/D&D - Site Management/Operations	0.0	0.0	0.0	0.0	0.0	0.0	0.0	0.0	0.0	0.0	0.0
CONSTRUCTION/D&D - Site Infrastructure	0.0	0.0	0.0	0.0	0.0	0.0	0.0	0.0	0.0	0.0	0.0
CONSTRUCTION/D&D - National Laboratories	0.0	0.0	0.0	0.0	0.0	0.0	0.0	0.0	0.0	0.0	0.0
CONSTRUCTION/D&D - Site Constructors	0.0	0.0	0.0	0.0	0.0	0.0	0.0	0.0	0.0	0.0	0.0
CONSTRUCTION/D&D - Architecture/Engineering Contracto	0.0	0.0	0.0	0.0	0.0	0.0	0.0	0.0	0.0	0.0	0.0
CONSTRUCTION/D&D - Construction Contractor	0.0	0.0	0.0	0.0	0.0	0.0	0.0	0.0	0.0	0.0	0.0
OPERATIONS - Site Management/Operations	0.0	0.0	0.0	0.0	0.0	0.0	0.0	0.0	0.0	0.0	0.0
OPERATIONS - Site Infrastructure	0.0	0.0	0.0	0.0	0.0	0.0	0.0	0.0	0.0	0.0	0.0
OPERATIONS - National Laboratories	0.0	0.0	0.0	0.0	0.0	0.0	0.0	0.0	0.0	0.0	0.0
OPERATIONS - Site Constructors	0.0	0.0	0.0	0.0	0.0	0.0	0.0	0.0	0.0	0.0	0.0
OPERATIONS - Architecture/Engineering Contractors	0.0	0.0	0.0	0.0	0.0	0.0	0.0	0.0	0.0	0.0	0.0
OPERATIONS - Construction Contractor	0.0	0.0	0.0	0.0	0.0	0.0	0.0	0.0	0.0	0.0	0.0
Worker Category Reddick FTE (FTE)											
Engineer/Management	0.0	0.0	0.0	0.0	0.0	0.0	0.0	0.0	0.0	0.0	0.0
Crafts	0.0	0.0	0.0	0.0	0.0	0.0	0.0	0.0	0.0	0.0	0.0
Maintenance	0.0	0.0	0.0	0.0	0.0	0.0	0.0	0.0	0.0	0.0	0.0
Operators	0.0	0.0	0.0	0.0	0.0	0.0	0.0	0.0	0.0	0.0	0.0
Infrastructure	0.0	0.0	0.0	0.0	0.0	0.0	0.0	0.0	0.0	0.0	0.0
Total	0.0	0.0	0.0	0.0	0.0	0.0	0.0	0.0	0.0	0.0	0.0

ALTERNATIVE 2 HLWV COST SUMMARY	FY30	FY31	FY32	FY33	FY34	FY35	FY36	FY37	FY38	FY39	FY40
Studies/Permitting	0	0	0	0	0	0	0	0	0	0	0
Design	0	0	0	0	0	0	0	0	0	0	0
Construction/D&D	0	0	0	0	0	0	0	0	0	0	0
Operation	0	0	0	0	0	0	0	0	0	0	0
Total	0	0	0	0	0	0	0	0	0	0	0

ALTERNATIVE 2 HLWV FTE SUMMARY	FY30	FY31	FY32	FY33	FY34	FY35	FY36	FY37	FY38	FY39	FY40
Engineer/Management	0.0	0.0	0.0	0.0	0.0	0.0	0.0	0.0	0.0	0.0	0.0
Crafts	0.0	0.0	0.0	0.0	0.0	0.0	0.0	0.0	0.0	0.0	0.0
Maintenance	0.0	0.0	0.0	0.0	0.0	0.0	0.0	0.0	0.0	0.0	0.0
Operators	0.0	0.0	0.0	0.0	0.0	0.0	0.0	0.0	0.0	0.0	0.0
Infrastructure	0.0	0.0	0.0	0.0	0.0	0.0	0.0	0.0	0.0	0.0	0.0
Total	0.0	0.0	0.0	0.0	0.0	0.0	0.0	0.0	0.0	0.0	0.0

ALTERNATIVE 2 HLWV REDDICK COST BREAKDOWN

Activity % of Alternative 2 HLWV Reddick Costs (%)	
Studies/Permitting	
Design	
Construction/D&D	
Operation	
Total Percentage	

Alternative 2 HLWV Reddick Costs($)	Totals
Studies/Permitting	11,700,000
Design	48,360,000
Construction/D&D	156,728,000
Operation	291,772,000
Total Cost	508,560,000

ALTERNATIVE 2 HLWV REDDICK FTE BREAKDOWN	Totals
Contractor FTE per Alternative 2 HLWV Activity (FTE)	
STUDIES/PERMITTING - Site Management/Operations	67.5
STUDIES/PERMITTING - Site Infrastructure	11.9
STUDIES/PERMITTING - National Laboratories	3.1
STUDIES/PERMITTING - Site Constructors	0.0
STUDIES/PERMITTING - Architecture/Engineering Contract	0.0
STUDIES/PERMITTING - Construction Contractor	0.0
DESIGN - Site Management/Operations	29.4
DESIGN - Site Infrastructure	5.2
DESIGN - National Laboratories	26.0
DESIGN - Site Constructors	17.3
DESIGN - Architecture/Engineering Contractors	201.5
DESIGN - Construction Contractor	0.0
CONSTRUCTION/D&D - Site Management/Operations	95.2
CONSTRUCTION/D&D - Site Infrastructure	16.8
CONSTRUCTION/D&D - National Laboratories	0.0
CONSTRUCTION/D&D - Site Constructors	56.0
CONSTRUCTION/D&D - Architecture/Engineering Contracto	43.5
CONSTRUCTION/D&D - Construction Contractor	921.9
OPERATIONS - Site Management/Operations	1,240.0
OPERATIONS - Site Infrastructure	218.8
OPERATIONS - National Laboratories	156.6
OPERATIONS - Site Constructors	0.0
OPERATIONS - Architecture/Engineering Contractors	0.0
OPERATIONS - Construction Contractor	0.0
Worker Category Reddick FTE (FTE)	
Engineer/Management	991.9
Crafts	748.7
Maintenance	419.0
Operators	698.3
Infrastructure	252.7
Total	3,110.6

ALTERNATIVE 2 HLWV COST SUMMARY	Totals
Studies/Permitting	31,917,575
Design	49,894,211
Construction/D&D	161,384,788
Operation	729,346,277
Total	972,542,851

ALTERNATIVE 2 HLWV FTE SUMMARY	Totals
Engineer/Management	1,540.2
Crafts	771.0
Maintenance	1,033.4
Operators	1,722.4
Infrastructure	527.2
Total	5,594.2

This page intentionally left blank.

APPENDIX B-5: ALTERNATIVE 3 COST AND FTE RESOURCES

This page intentionally left blank.

FUNCTION - ALTERNATIVE 3 PRETREATMENT	FY95	FY96	FY97	FY98	FY99	FY00
Technology Development (Test) Cost	17,262,028	16,119,000	16,086,284	11,575,785	11,575,785	4,758,768
Operate LLW Pretreatment Mod 1 Facility First Year (Hot Test)	0	0	0	0	0	0
Operate LLW Pretreatment Mod 2 Facility First Year (Hot Test)	0	0	0	0	0	0
Prepare for Start Up In Tank Processing	0	0	1,063,794	12,714,867	1,114,451	0
Start-up In-Tank Processing	0	0	0	0	3,718,683	4,075,936
Start-up and Operate Pretreatment Pilot Testing	0	0	2,744,937	10,936,178	10,936,178	1,786,388
Continue Operation of Pilot Testing	0	0				11,015,598
Tank AZ-101 Sludge Test (PSW49XXX)	959,856	1,267,219	997,975	10,625,079	37,644	0
Prep LLW Pretreatment Mod 1 Facility For Start-up Phase 2 (Co	0	0	0	0	0	0
Prep LLW Pretreatment Mod 2 Facility For Start-up Phase 2 (Co	0	0	0	0	0	0
WESF Hot Cell Test (PDW211XX)	12,369,178	10,792,515	8,701,654	5,232,769	867,496	0
Operate HLW Pretreatment Facility - First Year (Hot Test)	0	0	0	0	0	0
Prepare HLW Pretreatment Facility for Start-up (Cold Test)	0	0	0	0	0	0
Subtotal Test Costs	30,591,062	28,178,734	29,594,644	51,084,678	28,250,237	21,636,690
Test Oversight Costs	3,059,106	2,817,873	2,959,464	5,108,468	2,825,024	2,163,669
Total Pretreatment Base Costs	33,650,168	30,996,607	32,554,108	56,193,146	31,075,261	23,800,359
Total Alt 3 Reddick Costs	3,000,000	6,000,000	12,000,000	19,000,000	40,000,000	40,000,000
Pretreatment % of Total Alt 3 Reddick Costs	*48*	*48*	*48*	*48*	*48*	*48*
Alt 3 Pretreatment Reddick Costs	1,440,000	2,880,000	5,760,000	9,120,000	19,200,000	19,200,000
Alt 3 Pretreatment Actual Costs ($)	35,090,168	33,876,607	38,314,108	65,313,146	50,275,261	43,000,359

ALTERNATIVE 3 PRETREATMENT BASE COST BREAKDOWN	FY95	FY96	FY97	FY98	FY99	FY00
Activity % of Alt 3 Pretreatment Base Costs (%)						
Studies/Permitting	20	20	20	10	15	15
Design	5	5	5	5	5	5
Construction/D&D	25	25	25	10	5	5
Operation	50	50	50	75	75	75
Total Percentage	100	100	100	100	100	100
Alt 3 Pretreatment Activity Base Costs($)						
Studies/Permitting	6,730,034	6,199,321	6,510,822	5,619,315	4,661,289	3,570,054
Design	1,682,508	1,549,830	1,627,705	2,809,657	1,553,763	1,190,018
Construction/D&D	8,412,542	7,749,152	8,138,527	5,619,315	1,553,763	1,190,018
Operation	16,825,084	15,498,304	16,277,054	42,144,859	23,306,446	17,850,269
Total Cost	33,650,168	30,996,607	32,554,108	56,193,146	31,075,261	23,800,359

ALTERNATIVE 3 PRETREATMENT BASE FTE BREAKDOWN	FY95	FY96	FY97	FY98	FY99	FY00
Contractor Base FTE per Alt 3 Pretreatment Activity (FTE)						
STUDIES/PERMITTING - Site Management/Operations	30.6	28.2	29.6	25.6	21.2	16.3
STUDIES/PERMITTING - Site Infrastructure	5.4	5.0	5.2	4.5	3.7	2.9
STUDIES/PERMITTING - National Laboratories	9.0	8.3	8.7	7.5	6.3	4.8
STUDIES/PERMITTING - Site Constructors	0.0	0.0	0.0	0.0	0.0	0.0
STUDIES/PERMITTING - Architecture/Engineering Contractors	0.0	0.0	0.0	0.0	0.0	0.0
STUDIES/PERMITTING - Construction Contractor	0.0	0.0	0.0	0.0	0.0	0.0
DESIGN - Site Management/Operations	1.0	0.9	1.0	1.7	0.9	0.7
DESIGN - Site Infrastructure	0.2	0.2	0.2	0.3	0.2	0.1
DESIGN - National Laboratories	0.9	0.8	0.9	1.5	0.8	0.6
DESIGN - Site Constructors	0.6	0.6	0.6	1.0	0.6	0.4
DESIGN - Architecture/Engineering Contractors	7.0	6.5	6.8	11.7	6.5	5.0
DESIGN - Construction Contractor	0.0	0.0	0.0	0.0	0.0	0.0
CONSTRUCTION/D&D - Site Management/Operations	2.6	2.4	2.5	1.7	0.5	0.4
CONSTRUCTION/D&D - Site Infrastructure	0.5	0.4	0.4	0.3	0.1	0.1
CONSTRUCTION/D&D - National Laboratories	2.3	2.1	2.2	1.5	0.4	0.3
CONSTRUCTION/D&D - Site Constructors	3.0	2.8	2.9	2.0	0.6	0.4
CONSTRUCTION/D&D - Architecture/Engineering Contractors	2.3	2.2	2.3	1.6	0.4	0.3
CONSTRUCTION/D&D - Construction Contractor	49.5	45.6	47.9	33.1	9.1	7.0
OPERATIONS - Site Management/Operations	56.2	51.8	54.4	140.7	77.8	59.6
OPERATIONS - Site Infrastructure	9.9	9.1	9.6	24.8	13.7	10.5
OPERATIONS - National Laboratories	22.6	20.8	21.8	56.5	31.3	23.9
OPERATIONS - Site Constructors	0.0	0.0	0.0	0.0	0.0	0.0
OPERATIONS - Architecture/Engineering Contractors	0.0	0.0	0.0	0.0	0.0	0.0
OPERATIONS - Construction Contractor	0.0	0.0	0.0	0.0	0.0	0.0

Worker Category Base FTE (FTE)	FY95	FY96	FY97	FY98	FY99	FY00
Engineer/Management	84.4	77.8	81.7	101.5	61.7	47.3
Crafts	40.2	37.0	38.9	26.8	7.4	5.7
Maintenance	23.6	21.8	22.9	59.2	32.7	25.1
Operators	39.4	36.3	38.1	98.6	54.5	41.8
Infrastructure	16.0	14.7	15.4	30.0	17.7	13.6
Total	203.6	187.5	196.9	316.1	174.1	133.4

FUNCTION - ALTERNATIVE 3 PRETREATMENT	FY01	FY02	FY03	FY04	FY05	FY06
Technology Development (Test) Cost	4,739,809	800,285	500,285	0	0	0
Operate LLW Pretreatment Mod 1 Facility First Year (Hot Test)	0	0	0	0	38,794,388	12,520,940
Operate LLW Pretreatment Mod 2 Facility First Year (Hot Test)	0	0	0	0		20,418,986
Prepare for Start Up In Tank Processing	0	0	0	0	0	0
Start-up In-Tank Processing	4,059,698	4,075,936	4,075,936	4,092,175	341,015	0
Start-up and Operate Pretreatment Pilot Testing	0	0	0	0	0	0
Continue Operation of Pilot Testing	13,113,807	2,255,575	0	0	0	0
Tank AZ-101 Sludge Test (PSW49XXX)	0	0	0	0	0	0
Prep LLW Pretreatment Mod 1 Facility For Start-up Phase 2 (Co	0	0	0	11,059,206	3,608,794	0
Prep LLW Pretreatment Mod 2 Facility For Start-up Phase 2 (Co	0	0	0		17,903,592	5,778,408
WESF Hot Cell Test (PDW211XX)	0	0	0	0	0	0
Operate HLW Pretreatment Facility - First Year (Hot Test)	0	0	0	0	0	0
Prepare HLW Pretreatment Facility for Start-up (Cold Test)	0	0	0	0	0	0
Subtotal Test Costs	21,913,314	7,131,796	4,576,221	15,151,381	60,647,789	38,718,334
Test Oversight Costs	2,191,331	713,180	457,622	1,515,138	6,064,779	3,871,833
Total Pretreatment Base Costs	24,104,645	7,844,976	5,033,843	16,666,519	66,712,568	42,590,167
Total Alt 3 Reddick Costs	68,000,000	67,000,000	85,000,000	30,000,000	30,000,000	30,000,000
Pretreatment % of Total Alt 3 Reddick Costs	*48*	*4*	*4*	*4*	*4*	*4*
Alt 3 Pretreatment Reddick Costs	32,640,000	2,680,000	3,400,000	1,200,000	1,200,000	1,200,000
Alt 3 Pretreatment Actual Costs ($)	56,744,645	10,524,976	8,433,843	17,866,519	67,912,568	43,790,167

ALTERNATIVE 3 PRETREATMENT BASE COST BREAKDOWN	FY01	FY02	FY03	FY04	FY05	FY06
Activity % of Alt 3 Pretreatment Base Costs (%)						
Studies/Permitting	15	10	10	10	5	5
Design	5	0	0	0	0	0
Construction/D&D	0	0	0	0	0	0
Operation	80	90	90	90	95	95
Total Percentage	100	100	100	100	100	100
Alt 3 Pretreatment Activity Base Costs($)						
Studies/Permitting	3,615,697	784,498	503,384	1,666,652	3,335,628	2,129,508
Design	1,205,232	0	0	0	0	0
Construction/D&D	0	0	0	0	0	0
Operation	19,283,716	7,060,478	4,530,459	14,999,867	63,376,940	40,460,659
Total Cost	24,104,645	7,844,976	5,033,843	16,666,519	66,712,568	42,590,167

ALTERNATIVE 3 PRETREATMENT BASE FTE BREAKDOWN	FY01	FY02	FY03	FY04	FY05	FY06
Contractor Base FTE per Alt 3 Pretreatment Activity (FTE)						
STUDIES/PERMITTING - Site Management/Operations	16.5	3.6	2.3	7.6	15.2	9.7
STUDIES/PERMITTING - Site Infrastructure	2.9	0.6	0.4	1.3	2.7	1.7
STUDIES/PERMITTING - National Laboratories	4.9	1.1	0.7	2.2	4.5	2.9
STUDIES/PERMITTING - Site Constructors	0.0	0.0	0.0	0.0	0.0	0.0
STUDIES/PERMITTING - Architecture/Engineering Contractors	0.0	0.0	0.0	0.0	0.0	0.0
STUDIES/PERMITTING - Construction Contractor	0.0	0.0	0.0	0.0	0.0	0.0
DESIGN - Site Management/Operations	0.7	0.0	0.0	0.0	0.0	0.0
DESIGN - Site Infrastructure	0.1	0.0	0.0	0.0	0.0	0.0
DESIGN - National Laboratories	0.6	0.0	0.0	0.0	0.0	0.0
DESIGN - Site Constructors	0.4	0.0	0.0	0.0	0.0	0.0
DESIGN - Architecture/Engineering Contractors	5.0	0.0	0.0	0.0	0.0	0.0
DESIGN - Construction Contractor	0.0	0.0	0.0	0.0	0.0	0.0
CONSTRUCTION/D&D - Site Management/Operations	0.0	0.0	0.0	0.0	0.0	0.0
CONSTRUCTION/D&D - Site Infrastructure	0.0	0.0	0.0	0.0	0.0	0.0
CONSTRUCTION/D&D - National Laboratories	0.0	0.0	0.0	0.0	0.0	0.0
CONSTRUCTION/D&D - Site Constructors	0.0	0.0	0.0	0.0	0.0	0.0
CONSTRUCTION/D&D - Architecture/Engineering Contractors	0.0	0.0	0.0	0.0	0.0	0.0
CONSTRUCTION/D&D - Construction Contractor	0.0	0.0	0.0	0.0	0.0	0.0
OPERATIONS - Site Management/Operations	64.4	23.6	15.1	50.1	211.6	135.1
OPERATIONS - Site Infrastructure	11.4	4.2	2.7	8.8	37.3	23.8
OPERATIONS - National Laboratories	25.9	9.5	6.1	20.1	85.0	54.3
OPERATIONS - Site Constructors	0.0	0.0	0.0	0.0	0.0	0.0
OPERATIONS - Architecture/Engineering Contractors	0.0	0.0	0.0	0.0	0.0	0.0
OPERATIONS - Construction Contractor	0.0	0.0	0.0	0.0	0.0	0.0

Worker Category Base FTE (FTE)	FY01	FY02	FY03	FY04	FY05	FY06
Engineer/Management	46.2	11.2	7.2	23.9	79.0	50.4
Crafts	0.0	0.0	0.0	0.0	0.0	0.0
Maintenance	27.1	9.9	6.4	21.1	89.0	56.8
Operators	45.1	16.5	10.6	35.1	148.3	94.7
Infrastructure	14.4	4.8	3.1	10.2	40.0	25.6
Total	132.8	42.5	27.2	90.2	356.3	227.5

FUNCTION - ALTERNATIVE 3 PRETREATMENT	FY07	FY08	FY09	FY10	FY11	FY12
Technology Development (Test) Cost	0	0	0	0	0	0
Operate LLW Pretreatment Mod 1 Facility First Year (Hot Test)	0	0	0	0	0	0
Operate LLW Pretreatment Mod 2 Facility First Year (Hot Test)	6,590,255	0	0	0	0	0
Prepare for Start Up In Tank Processing	0	0	0	0	0	0
Start-up In-Tank Processing	0	0	0	0	0	0
Start-up and Operate Pretreatment Pilot Testing	0	0	0	0	0	0
Continue Operation of Pilot Testing	0	0	0	0	0	0
Tank AZ-101 Sludge Test (PSW49XXX)	0	0	0	0	0	0
Prep LLW Pretreatment Mod 1 Facility For Start-up Phase 2 (Co	0	0	0	0	0	0
Prep LLW Pretreatment Mod 2 Facility For Start-up Phase 2 (Co	0	0	0	0	0	0
WESF Hot Cell Test (PDW211XX)	0	0	0	0	0	0
Operate HLW Pretreatment Facility - First Year (Hot Test)	0	965,396	0	0	0	0
Prepare HLW Pretreatment Facility for Start-up (Cold Test)	1,061,420	2,122,840	0	0	0	0
Subtotal Test Costs	7,651,675	3,088,236	0	0	0	0
Test Oversight Costs	765,168	308,824	0	0	0	0
Total Pretreatment Base Costs	8,416,843	3,397,060	0	0	0	0
Total Alt 3 Reddick Costs	30,000,000	30,000,000	0	0		
Pretreatment % of Total Alt 3 Reddick Costs	*4*	*4*	*0*	*0*		
Alt 3 Pretreatment Reddick Costs	1,200,000	1,200,000	0	0	0	0
Alt 3 Pretreatment Actual Costs ($)	9,616,843	4,597,060	0	0	0	0

ALTERNATIVE 3 PRETREATMENT BASE COST BREAKDOWN	FY07	FY08	FY09	FY10	FY11	FY12
Activity % of Alt 3 Pretreatment Base Costs (%)						
Studies/Permitting	5	5	0	0	0	0
Design	0	0	0	0	0	0
Construction/D&D	0	0	0	0	0	0
Operation	95	95	0	0	0	0
Total Percentage	100	100	0	0	0	0
Alt 3 Pretreatment Activity Base Costs($)						
Studies/Permitting	420,842	169,853	0	0	0	0
Design	0	0	0	0	0	0
Construction/D&D	0	0	0	0	0	0
Operation	7,996,000	3,227,207	0	0	0	0
Total Cost	8,416,843	3,397,060	0	0	0	0

ALTERNATIVE 3 PRETREATMENT BASE FTE BREAKDOWN	FY07	FY08	FY09	FY10	FY11	FY12
Contractor Base FTE per Alt 3 Pretreatment Activity (FTE)						
STUDIES/PERMITTING - Site Management/Operations	1.9	0.8	0.0	0.0	0.0	0.0
STUDIES/PERMITTING - Site Infrastructure	0.3	0.1	0.0	0.0	0.0	0.0
STUDIES/PERMITTING - National Laboratories	0.6	0.2	0.0	0.0	0.0	0.0
STUDIES/PERMITTING - Site Constructors	0.0	0.0	0.0	0.0	0.0	0.0
STUDIES/PERMITTING - Architecture/Engineering Contractors	0.0	0.0	0.0	0.0	0.0	0.0
STUDIES/PERMITTING - Construction Contractor	0.0	0.0	0.0	0.0	0.0	0.0
DESIGN - Site Management/Operations	0.0	0.0	0.0	0.0	0.0	0.0
DESIGN - Site Infrastructure	0.0	0.0	0.0	0.0	0.0	0.0
DESIGN - National Laboratories	0.0	0.0	0.0	0.0	0.0	0.0
DESIGN - Site Constructors	0.0	0.0	0.0	0.0	0.0	0.0
DESIGN - Architecture/Engineering Contractors	0.0	0.0	0.0	0.0	0.0	0.0
DESIGN - Construction Contractor	0.0	0.0	0.0	0.0	0.0	0.0
CONSTRUCTION/D&D - Site Management/Operations	0.0	0.0	0.0	0.0	0.0	0.0
CONSTRUCTION/D&D - Site Infrastructure	0.0	0.0	0.0	0.0	0.0	0.0
CONSTRUCTION/D&D - National Laboratories	0.0	0.0	0.0	0.0	0.0	0.0
CONSTRUCTION/D&D - Site Constructors	0.0	0.0	0.0	0.0	0.0	0.0
CONSTRUCTION/D&D - Architecture/Engineering Contractors	0.0	0.0	0.0	0.0	0.0	0.0
CONSTRUCTION/D&D - Construction Contractor	0.0	0.0	0.0	0.0	0.0	0.0
OPERATIONS - Site Management/Operations	26.7	10.8	0.0	0.0	0.0	0.0
OPERATIONS - Site Infrastructure	4.7	1.9	0.0	0.0	0.0	0.0
OPERATIONS - National Laboratories	10.7	4.3	0.0	0.0	0.0	0.0
OPERATIONS - Site Constructors	0.0	0.0	0.0	0.0	0.0	0.0
OPERATIONS - Architecture/Engineering Contractors	0.0	0.0	0.0	0.0	0.0	0.0
OPERATIONS - Construction Contractor	0.0	0.0	0.0	0.0	0.0	0.0

Worker Category Base FTE (FTE)	FY07	FY08	FY09	FY10	FY11	FY12
Engineer/Management	10.0	4.0	0.0	0.0	0.0	0.0
Crafts	0.0	0.0	0.0	0.0	0.0	0.0
Maintenance	11.2	4.5	0.0	0.0	0.0	0.0
Operators	18.7	7.6	0.0	0.0	0.0	0.0
Infrastructure	5.1	2.0	0.0	0.0	0.0	0.0
Total	45.0	18.1	0.0	0.0	0.0	0.0

FUNCTION - ALTERNATIVE 3 PRETREATMENT	FY13	FY14	FY15	FY16	FY17	FY18	FY19	FY20	FY21	FY22
Technology Development (Test) Cost	0	0	0	0	0	0	0	0	0	0
Operate LLW Pretreatment Mod 1 Facility First Year (Hot Test)	0	0	0	0	0	0	0	0	0	0
Operate LLW Pretreatment Mod 2 Facility First Year (Hot Test)	0	0	0	0	0	0	0	0	0	0
Prepare for Start Up In Tank Processing	0	0	0	0	0	0	0	0	0	0
Start-up In-Tank Processing	0	0	0	0	0	0	0	0	0	0
Start-up and Operate Pretreatment Pilot Testing	0	0	0	0	0	0	0	0	0	0
Continue Operation of Pilot Testing	0	0	0	0	0	0	0	0	0	0
Tank AZ-101 Sludge Test (PSW49XXX)	0	0	0	0	0	0	0	0	0	0
Prep LLW Pretreatment Mod 1 Facility For Start-up Phase 2 (Co	0	0	0	0	0	0	0	0	0	0
Prep LLW Pretreatment Mod 2 Facility For Start-up Phase 2 (Co	0	0	0	0	0	0	0	0	0	0
WESF Hot Cell Test (PDW211XX)	0	0	0	0	0	0	0	0	0	0
Operate HLW Pretreatment Facility - First Year (Hot Test)	0	0	0	0	0	0	0	0	0	0
Prepare HLW Pretreatment Facility for Start-up (Cold Test)	0	0	0	0	0	0	0	0	0	0
Subtotal Test Costs	0	0	0	0	0	0	0	0	0	0
Test Oversight Costs	0	0	0	0	0	0	0	0	0	0
Total Pretreatment Base Costs	0	0	0	0	0	0	0	0	0	0
Total Alt 3 Reddick Costs										
Pretreatment % of Total Alt 3 Reddick Costs										
Alt 3 Pretreatment Reddick Costs	0	0	0	0	0	0	0	0	0	0
Alt 3 Pretreatment Actual Costs ($)	0	0	0	0	0	0	0	0	0	0

ALTERNATIVE 3 PRETREATMENT BASE COST BREAKDOWN	FY13	FY14	FY15	FY16	FY17	FY18	FY19	FY20	FY21	FY22
Activity % of Alt 3 Pretreatment Base Costs (%)										
Studies/Permitting	0	0	0	0	0	0	0	0	0	0
Design	0	0	0	0	0	0	0	0	0	0
Construction/D&D	0	0	0	0	0	0	0	0	0	0
Operation	0	0	0	0	0	0	0	0	0	0
Total Percentage	0	0	0	0	0	0	0	0	0	0
Alt 3 Pretreatment Activity Base Costs($)										
Studies/Permitting	0	0	0	0	0	0	0	0	0	0
Design	0	0	0	0	0	0	0	0	0	0
Construction/D&D	0	0	0	0	0	0	0	0	0	0
Operation	0	0	0	0	0	0	0	0	0	0
Total Cost	0	0	0	0	0	0	0	0	0	0

ALTERNATIVE 3 PRETREATMENT BASE FTE BREAKDOWN	FY13	FY14	FY15	FY16	FY17	FY18	FY19	FY20	FY21	FY22
Contractor Base FTE per Alt 3 Pretreatment Activity (FTE)										
STUDIES/PERMITTING - Site Management/Operations	0.0	0.0	0.0	0.0	0.0	0.0	0.0	0.0	0.0	0.0
STUDIES/PERMITTING - Site Infrastructure	0.0	0.0	0.0	0.0	0.0	0.0	0.0	0.0	0.0	0.0
STUDIES/PERMITTING - National Laboratories	0.0	0.0	0.0	0.0	0.0	0.0	0.0	0.0	0.0	0.0
STUDIES/PERMITTING - Site Constructors	0.0	0.0	0.0	0.0	0.0	0.0	0.0	0.0	0.0	0.0
STUDIES/PERMITTING - Architecture/Engineering Contractors	0.0	0.0	0.0	0.0	0.0	0.0	0.0	0.0	0.0	0.0
STUDIES/PERMITTING - Construction Contractor	0.0	0.0	0.0	0.0	0.0	0.0	0.0	0.0	0.0	0.0
DESIGN - Site Management/Operations	0.0	0.0	0.0	0.0	0.0	0.0	0.0	0.0	0.0	0.0
DESIGN - Site Infrastructure	0.0	0.0	0.0	0.0	0.0	0.0	0.0	0.0	0.0	0.0
DESIGN - National Laboratories	0.0	0.0	0.0	0.0	0.0	0.0	0.0	0.0	0.0	0.0
DESIGN - Site Constructors	0.0	0.0	0.0	0.0	0.0	0.0	0.0	0.0	0.0	0.0
DESIGN - Architecture/Engineering Contractors	0.0	0.0	0.0	0.0	0.0	0.0	0.0	0.0	0.0	0.0
DESIGN - Construction Contractor	0.0	0.0	0.0	0.0	0.0	0.0	0.0	0.0	0.0	0.0
CONSTRUCTION/D&D - Site Management/Operations	0.0	0.0	0.0	0.0	0.0	0.0	0.0	0.0	0.0	0.0
CONSTRUCTION/D&D - Site Infrastructure	0.0	0.0	0.0	0.0	0.0	0.0	0.0	0.0	0.0	0.0
CONSTRUCTION/D&D - National Laboratories	0.0	0.0	0.0	0.0	0.0	0.0	0.0	0.0	0.0	0.0
CONSTRUCTION/D&D - Site Constructors	0.0	0.0	0.0	0.0	0.0	0.0	0.0	0.0	0.0	0.0
CONSTRUCTION/D&D - Architecture/Engineering Contractors	0.0	0.0	0.0	0.0	0.0	0.0	0.0	0.0	0.0	0.0
CONSTRUCTION/D&D - Construction Contractor	0.0	0.0	0.0	0.0	0.0	0.0	0.0	0.0	0.0	0.0
OPERATIONS - Site Management/Operations	0.0	0.0	0.0	0.0	0.0	0.0	0.0	0.0	0.0	0.0
OPERATIONS - Site Infrastructure	0.0	0.0	0.0	0.0	0.0	0.0	0.0	0.0	0.0	0.0
OPERATIONS - National Laboratories	0.0	0.0	0.0	0.0	0.0	0.0	0.0	0.0	0.0	0.0
OPERATIONS - Site Constructors	0.0	0.0	0.0	0.0	0.0	0.0	0.0	0.0	0.0	0.0
OPERATIONS - Architecture/Engineering Contractors	0.0	0.0	0.0	0.0	0.0	0.0	0.0	0.0	0.0	0.0
OPERATIONS - Construction Contractor	0.0	0.0	0.0	0.0	0.0	0.0	0.0	0.0	0.0	0.0

Worker Category Base FTE (FTE)	FY13	FY14	FY15	FY16	FY17	FY18	FY19	FY20	FY21	FY22
Engineer/Management	0.0	0.0	0.0	0.0	0.0	0.0	0.0	0.0	0.0	0.0
Crafts	0.0	0.0	0.0	0.0	0.0	0.0	0.0	0.0	0.0	0.0
Maintenance	0.0	0.0	0.0	0.0	0.0	0.0	0.0	0.0	0.0	0.0
Operators	0.0	0.0	0.0	0.0	0.0	0.0	0.0	0.0	0.0	0.0
Infrastructure	0.0	0.0	0.0	0.0	0.0	0.0	0.0	0.0	0.0	0.0
Total	0.0	0.0	0.0	0.0	0.0	0.0	0.0	0.0	0.0	0.0

FUNCTION - ALTERNATIVE 3 PRETREATMENT	FY23	FY24	FY25	FY26	FY27	FY28	FY29	FY30	FY31	FY32	FY33	FY34	FY35
Technology Development (Test) Cost	0	0	0	0	0	0	0	0	0	0	0	0	0
Operate LLW Pretreatment Mod 1 Facility First Year (Hot Test)	0	0	0	0	0	0	0	0	0	0	0	0	0
Operate LLW Pretreatment Mod 2 Facility First Year (Hot Test)	0	0	0	0	0	0	0	0	0	0	0	0	0
Prepare for Start Up In Tank Processing	0	0	0	0	0	0	0	0	0	0	0	0	0
Start-up In-Tank Processing	0	0	0	0	0	0	0	0	0	0	0	0	0
Start-up and Operate Pretreatment Pilot Testing	0	0	0	0	0	0	0	0	0	0	0	0	0
Continue Operation of Pilot Testing	0	0	0	0	0	0	0	0	0	0	0	0	0
Tank AZ-101 Sludge Test (PSW49XXX)	0	0	0	0	0	0	0	0	0	0	0	0	0
Prep LLW Pretreatment Mod 1 Facility For Start-up Phase 2 (Co	0	0	0	0	0	0	0	0	0	0	0	0	0
Prep LLW Pretreatment Mod 2 Facility For Start-up Phase 2 (Co	0	0	0	0	0	0	0	0	0	0	0	0	0
WESF Hot Cell Test (PDW211XX)	0	0	0	0	0	0	0	0	0	0	0	0	0
Operate HLW Pretreatment Facility - First Year (Hot Test)	0	0	0	0	0	0	0	0	0	0	0	0	0
Prepare HLW Pretreatment Facility for Start-up (Cold Test)	0	0	0	0	0	0	0	0	0	0	0	0	0
Subtotal Test Costs	0	0	0	0	0	0	0	0	0	0	0	0	0
Test Oversight Costs	0	0	0	0	0	0	0	0	0	0	0	0	0
Total Pretreatment Base Costs	0	0	0	0	0	0	0	0	0	0	0	0	0
Total Alt 3 Reddick Costs													
Pretreatment % of Total Alt 3 Reddick Costs													
Alt 3 Pretreatment Reddick Costs	0	0	0	0	0	0	0	0	0	0	0	0	0
Alt 3 Pretreatment Actual Costs ($)	0	0	0	0	0	0	0	0	0	0	0	0	0

ALTERNATIVE 3 PRETREATMENT BASE COST BREAKDOWN	FY23	FY24	FY25	FY26	FY27	FY28	FY29	FY30	FY31	FY32	FY33	FY34	FY35
Activity % of Alt 3 Pretreatment Base Costs (%)													
Studies/Permitting	0	0	0	0	0	0	0	0	0	0	0	0	0
Design	0	0	0	0	0	0	0	0	0	0	0	0	0
Construction/D&D	0	0	0	0	0	0	0	0	0	0	0	0	0
Operation	0	0	0	0	0	0	0	0	0	0	0	0	0
Total Percentage	0	0	0	0	0	0	0	0	0	0	0	0	0
Alt 3 Pretreatment Activity Base Costs($)													
Studies/Permitting	0	0	0	0	0	0	0	0	0	0	0	0	0
Design	0	0	0	0	0	0	0	0	0	0	0	0	0
Construction/D&D	0	0	0	0	0	0	0	0	0	0	0	0	0
Operation	0	0	0	0	0	0	0	0	0	0	0	0	0
Total Cost	0	0	0	0	0	0	0	0	0	0	0	0	0

ALTERNATIVE 3 PRETREATMENT BASE FTE BREAKDOWN	FY23	FY24	FY25	FY26	FY27	FY28	FY29	FY30	FY31	FY32	FY33	FY34	FY35
Contractor Base FTE per Alt 3 Pretreatment Activity (FTE)													
STUDIES/PERMITTING - Site Management/Operations	0.0	0.0	0.0	0.0	0.0	0.0	0.0	0.0	0.0	0.0	0.0	0.0	0.0
STUDIES/PERMITTING - Site Infrastructure	0.0	0.0	0.0	0.0	0.0	0.0	0.0	0.0	0.0	0.0	0.0	0.0	0.0
STUDIES/PERMITTING - National Laboratories	0.0	0.0	0.0	0.0	0.0	0.0	0.0	0.0	0.0	0.0	0.0	0.0	0.0
STUDIES/PERMITTING - Site Constructors	0.0	0.0	0.0	0.0	0.0	0.0	0.0	0.0	0.0	0.0	0.0	0.0	0.0
STUDIES/PERMITTING - Architecture/Engineering Contractors	0.0	0.0	0.0	0.0	0.0	0.0	0.0	0.0	0.0	0.0	0.0	0.0	0.0
STUDIES/PERMITTING - Construction Contractor	0.0	0.0	0.0	0.0	0.0	0.0	0.0	0.0	0.0	0.0	0.0	0.0	0.0
DESIGN - Site Management/Operations	0.0	0.0	0.0	0.0	0.0	0.0	0.0	0.0	0.0	0.0	0.0	0.0	0.0
DESIGN - Site Infrastructure	0.0	0.0	0.0	0.0	0.0	0.0	0.0	0.0	0.0	0.0	0.0	0.0	0.0
DESIGN - National Laboratories	0.0	0.0	0.0	0.0	0.0	0.0	0.0	0.0	0.0	0.0	0.0	0.0	0.0
DESIGN - Site Constructors	0.0	0.0	0.0	0.0	0.0	0.0	0.0	0.0	0.0	0.0	0.0	0.0	0.0
DESIGN - Architecture/Engineering Contractors	0.0	0.0	0.0	0.0	0.0	0.0	0.0	0.0	0.0	0.0	0.0	0.0	0.0
DESIGN - Construction Contractor	0.0	0.0	0.0	0.0	0.0	0.0	0.0	0.0	0.0	0.0	0.0	0.0	0.0
CONSTRUCTION/D&D - Site Management/Operations	0.0	0.0	0.0	0.0	0.0	0.0	0.0	0.0	0.0	0.0	0.0	0.0	0.0
CONSTRUCTION/D&D - Site Infrastructure	0.0	0.0	0.0	0.0	0.0	0.0	0.0	0.0	0.0	0.0	0.0	0.0	0.0
CONSTRUCTION/D&D - National Laboratories	0.0	0.0	0.0	0.0	0.0	0.0	0.0	0.0	0.0	0.0	0.0	0.0	0.0
CONSTRUCTION/D&D - Site Constructors	0.0	0.0	0.0	0.0	0.0	0.0	0.0	0.0	0.0	0.0	0.0	0.0	0.0
CONSTRUCTION/D&D - Architecture/Engineering Contractors	0.0	0.0	0.0	0.0	0.0	0.0	0.0	0.0	0.0	0.0	0.0	0.0	0.0
CONSTRUCTION/D&D - Construction Contractor	0.0	0.0	0.0	0.0	0.0	0.0	0.0	0.0	0.0	0.0	0.0	0.0	0.0
OPERATIONS - Site Management/Operations	0.0	0.0	0.0	0.0	0.0	0.0	0.0	0.0	0.0	0.0	0.0	0.0	0.0
OPERATIONS - Site Infrastructure	0.0	0.0	0.0	0.0	0.0	0.0	0.0	0.0	0.0	0.0	0.0	0.0	0.0
OPERATIONS - National Laboratories	0.0	0.0	0.0	0.0	0.0	0.0	0.0	0.0	0.0	0.0	0.0	0.0	0.0
OPERATIONS - Site Constructors	0.0	0.0	0.0	0.0	0.0	0.0	0.0	0.0	0.0	0.0	0.0	0.0	0.0
OPERATIONS - Architecture/Engineering Contractors	0.0	0.0	0.0	0.0	0.0	0.0	0.0	0.0	0.0	0.0	0.0	0.0	0.0
OPERATIONS - Construction Contractor	0.0	0.0	0.0	0.0	0.0	0.0	0.0	0.0	0.0	0.0	0.0	0.0	0.0

Worker Category Base FTE (FTE)	FY23	FY24	FY25	FY26	FY27	FY28	FY29	FY30	FY31	FY32	FY33	FY34	FY35
Engineer/Management	0.0	0.0	0.0	0.0	0.0	0.0	0.0	0.0	0.0	0.0	0.0	0.0	0.0
Crafts	0.0	0.0	0.0	0.0	0.0	0.0	0.0	0.0	0.0	0.0	0.0	0.0	0.0
Maintenance	0.0	0.0	0.0	0.0	0.0	0.0	0.0	0.0	0.0	0.0	0.0	0.0	0.0
Operators	0.0	0.0	0.0	0.0	0.0	0.0	0.0	0.0	0.0	0.0	0.0	0.0	0.0
Infrastructure	0.0	0.0	0.0	0.0	0.0	0.0	0.0	0.0	0.0	0.0	0.0	0.0	0.0
Total	0.0	0.0	0.0	0.0	0.0	0.0	0.0	0.0	0.0	0.0	0.0	0.0	0.0

FUNCTION - ALTERNATIVE 3 PRETREATMENT	FY36	FY37	FY38	FY39	FY40	Totals
Technology Development (Test) Cost	0	0	0	0	0	83,418,029
Operate LLW Pretreatment Mod 1 Facility First Year (Hot Test)	0	0	0	0	0	51,315,328
Operate LLW Pretreatment Mod 2 Facility First Year (Hot Test)	0	0	0	0	0	27,009,241
Prepare for Start Up In Tank Processing	0	0	0	0	0	14,893,112
Start-up In-Tank Processing	0	0	0	0	0	24,439,379
Start-up and Operate Pretreatment Pilot Testing	0	0	0	0	0	26,403,681
Continue Operation of Pilot Testing	0	0	0	0	0	26,384,980
Tank AZ-101 Sludge Test (PSW49XXX)	0	0	0	0	0	
Prep LLW Pretreatment Mod 1 Facility For Start-up Phase 2 (Co	0	0	0	0	0	
Prep LLW Pretreatment Mod 2 Facility For Start-up Phase 2 (Co	0	0	0	0	0	
WESF Hot Cell Test (PDW211XX)	0	0	0	0	0	
Operate HLW Pretreatment Facility - First Year (Hot Test)	0	0	0	0	0	
Prepare HLW Pretreatment Facility for Start-up (Cold Test)	0	0	0	0	0	
Subtotal Test Costs	0	0	0	0	0	348,214,791
Test Oversight Costs	0	0	0	0	0	34,821,479
Total Pretreatment Base Costs	0	0	0	0	0	383,036,270
Total Alt 3 Reddick Costs						490,000,000
Pretreatment % of Total Alt 3 Reddick Costs						364
Alt 3 Pretreatment Reddick Costs	0	0	0	0	0	102,320,000
Alt 3 Pretreatment Actual Costs ($)	0	0	0	0	0	485,356,270

ALTERNATIVE 3 PRETREATMENT BASE COST BREAKDOWN	FY36	FY37	FY38	FY39	FY40	
Activity % of Alt 3 Pretreatment Base Costs (%)						
Studies/Permitting	0	0	0	0	0	
Design	0	0	0	0	0	
Construction/D&D	0	0	0	0	0	
Operation	0	0	0	0	0	
Total Percentage	0	0	0	0	0	
Alt 3 Pretreatment Activity Base Costs($)						Totals
Studies/Permitting	0	0	0	0	0	45,916,897
Design	0	0	0	0	0	11,618,715
Construction/D&D	0	0	0	0	0	32,663,317
Operation	0	0	0	0	0	292,837,342
Total Cost	0	0	0	0	0	383,036,270

ALTERNATIVE 3 PRETREATMENT BASE FTE BREAKDOWN	FY36	FY37	FY38	FY39	FY40	Totals
Contractor Base FTE per Alt 3 Pretreatment Activity (FTE)						
STUDIES/PERMITTING - Site Management/Operations	0.0	0.0	0.0	0.0	0.0	209.1
STUDIES/PERMITTING - Site Infrastructure	0.0	0.0	0.0	0.0	0.0	36.9
STUDIES/PERMITTING - National Laboratories	0.0	0.0	0.0	0.0	0.0	61.6
STUDIES/PERMITTING - Site Constructors	0.0	0.0	0.0	0.0	0.0	0.0
STUDIES/PERMITTING - Architecture/Engineering Contractors	0.0	0.0	0.0	0.0	0.0	0.0
STUDIES/PERMITTING - Construction Contractor	0.0	0.0	0.0	0.0	0.0	0.0
DESIGN - Site Management/Operations	0.0	0.0	0.0	0.0	0.0	7.1
DESIGN - Site Infrastructure	0.0	0.0	0.0	0.0	0.0	1.2
DESIGN - National Laboratories	0.0	0.0	0.0	0.0	0.0	6.2
DESIGN - Site Constructors	0.0	0.0	0.0	0.0	0.0	4.1
DESIGN - Architecture/Engineering Contractors	0.0	0.0	0.0	0.0	0.0	48.4
DESIGN - Construction Contractor	0.0	0.0	0.0	0.0	0.0	0.0
CONSTRUCTION/D&D - Site Management/Operations	0.0	0.0	0.0	0.0	0.0	9.9
CONSTRUCTION/D&D - Site Infrastructure	0.0	0.0	0.0	0.0	0.0	1.7
CONSTRUCTION/D&D - National Laboratories	0.0	0.0	0.0	0.0	0.0	8.8
CONSTRUCTION/D&D - Site Constructors	0.0	0.0	0.0	0.0	0.0	11.7
CONSTRUCTION/D&D - Architecture/Engineering Contractors	0.0	0.0	0.0	0.0	0.0	9.1
CONSTRUCTION/D&D - Construction Contractor	0.0	0.0	0.0	0.0	0.0	192.1
OPERATIONS - Site Management/Operations	0.0	0.0	0.0	0.0	0.0	977.9
OPERATIONS - Site Infrastructure	0.0	0.0	0.0	0.0	0.0	172.6
OPERATIONS - National Laboratories	0.0	0.0	0.0	0.0	0.0	392.9
OPERATIONS - Site Constructors	0.0	0.0	0.0	0.0	0.0	0.0
OPERATIONS - Architecture/Engineering Contractors	0.0	0.0	0.0	0.0	0.0	0.0
OPERATIONS - Construction Contractor	0.0	0.0	0.0	0.0	0.0	0.0

Worker Category Base FTE (FTE)	FY36	FY37	FY38	FY39	FY40	Totals
Engineer/Management	0.0	0.0	0.0	0.0	0.0	686.2
Crafts	0.0	0.0	0.0	0.0	0.0	156.0
Maintenance	0.0	0.0	0.0	0.0	0.0	411.2
Operators	0.0	0.0	0.0	0.0	0.0	685.4
Infrastructure	0.0	0.0	0.0	0.0	0.0	212.5
Total	0.0	0.0	0.0	0.0	0.0	2,151.3

ALTERNATIVE 3 PRETREATMENT REDDICK COST BREAKDOWN	FY95	FY96	FY97	FY98	FY99	FY00
Activity % of Alt 3 Pretreatment Reddick Costs (%)						
Studies/Permitting	100	50	50	0	0	0
Design	0	50	50	30	30	20
Construction/D&D	0	0	0	70	70	0
Operation	0	0	0	0	0	80
Total Percentage	100	100	100	100	100	100
Alt 3 Pretreatment Activity Reddick Costs($)						
Studies/Permitting	1,440,000	1,440,000	2,880,000	0	0	0
Design	0	1,440,000	2,880,000	2,736,000	5,760,000	3,840,000
Construction/D&D	0	0	0	6,384,000	13,440,000	0
Operation	0	0	0	0	0	15,360,000
Total Cost	1,440,000	2,880,000	5,760,000	9,120,000	19,200,000	19,200,000

ALTERNATIVE 3 PRETREATMENT REDDICK FTE BREAKDOWN	FY95	FY96	FY97	FY98	FY99	FY00
Contractor Reddick FTE per Alt 3 Pretreatment Activity (FTE)						
STUDIES/PERMITTING - Site Management/Operations	8.3	8.3	16.6	0.0	0.0	0.0
STUDIES/PERMITTING - Site Infrastructure	1.5	1.5	2.9	0.0	0.0	0.0
STUDIES/PERMITTING - National Laboratories	0.4	0.4	0.8	0.0	0.0	0.0
STUDIES/PERMITTING - Site Constructors	0.0	0.0	0.0	0.0	0.0	0.0
STUDIES/PERMITTING - Architecture/Engineering Contract	0.0	0.0	0.0	0.0	0.0	0.0
STUDIES/PERMITTING - Construction Contractor	0.0	0.0	0.0	0.0	0.0	0.0
DESIGN - Site Management/Operations	0.0	0.9	1.7	1.7	3.5	2.3
DESIGN - Site Infrastructure	0.0	0.2	0.3	0.3	0.6	0.4
DESIGN - National Laboratories	0.0	0.8	1.5	1.5	3.1	2.1
DESIGN - Site Constructors	0.0	0.5	1.0	1.0	2.1	1.4
DESIGN - Architecture/Engineering Contractors	0.0	6.0	12.0	11.4	24.0	16.0
DESIGN - Construction Contractor	0.0	0.0	0.0	0.0	0.0	0.0
CONSTRUCTION/D&D - Site Management/Operations	0.0	0.0	0.0	3.9	8.2	0.0
CONSTRUCTION/D&D - Site Infrastructure	0.0	0.0	0.0	0.7	1.4	0.0
CONSTRUCTION/D&D - National Laboratories	0.0	0.0	0.0	0.0	0.0	0.0
CONSTRUCTION/D&D - Site Constructors	0.0	0.0	0.0	2.3	4.8	0.0
CONSTRUCTION/D&D - Architecture/Engineering Contracto	0.0	0.0	0.0	1.8	3.7	0.0
CONSTRUCTION/D&D - Construction Contractor	0.0	0.0	0.0	37.6	79.1	0.0
OPERATIONS - Site Management/Operations	0.0	0.0	0.0	0.0	0.0	65.3
OPERATIONS - Site Infrastructure	0.0	0.0	0.0	0.0	0.0	11.5
OPERATIONS - National Laboratories	0.0	0.0	0.0	0.0	0.0	8.2
OPERATIONS - Site Constructors	0.0	0.0	0.0	0.0	0.0	0.0
OPERATIONS - Architecture/Engineering Contractors	0.0	0.0	0.0	0.0	0.0	0.0
OPERATIONS - Construction Contractor	0.0	0.0	0.0	0.0	0.0	0.0
Worker Category Reddick FTE (FTE)						
Engineer/Management	8.7	16.9	33.7	30.5	64.2	36.5
Crafts	0.0	0.0	0.0	30.5	64.2	0.0
Maintenance	0.0	0.0	0.0	0.0	0.0	22.1
Operators	0.0	0.0	0.0	0.0	0.0	36.8
Infrastructure	1.5	1.6	3.2	1.0	2.1	11.9
Total	10.2	18.5	36.9	62.0	130.5	107.2

ALTERNATIVE 3 PRETREATMENT COST SUMMARY	FY95	FY96	FY97	FY98	FY99	FY00
Studies/Permitting	8,170,034	7,639,321	9,390,822	5,619,315	4,661,289	3,570,054
Design	1,682,508	2,989,830	4,507,705	5,545,657	7,313,763	5,030,018
Construction/D&D	8,412,542	7,749,152	8,138,527	12,003,315	14,993,763	1,190,018
Operation	16,825,084	15,498,304	16,277,054	42,144,859	23,306,446	33,210,269
Total	35,090,168	33,876,607	38,314,108	65,313,146	50,275,261	43,000,359

ALTERNATIVE 3 PRETREATMENT FTE SUMMARY	FY95	FY96	FY97	FY98	FY99	FY00
Engineer/Management	93.1	94.6	115.4	132.0	125.9	83.7
Crafts	40.2	37.0	38.9	57.3	71.6	5.7
Maintenance	23.6	21.8	22.9	59.2	32.7	47.1
Operators	39.4	36.3	38.1	98.6	54.5	78.5
Infrastructure	17.4	16.3	18.7	30.9	19.8	25.5
Total	213.7	206.0	233.9	378.1	304.6	240.6

ALTERNATIVE 3 PRETREATMENT REDDICK COST BREAKDOWN	FY01	FY02	FY03	FY04	FY05	FY06
Activity % of Alt 3 Pretreatment Reddick Costs (%)						
Studies/Permitting	0	0	0	0	0	0
Design	0	0	0	0	0	0
Construction/D&D	20	100	100	0	0	0
Operation	80	0	0	100	100	100
Total Percentage	**100**	**100**	**100**	**100**	**100**	**100**
Alt 3 Pretreatment Activity Reddick Costs($)						
Studies/Permitting	0	0	0	0	0	0
Design	0	0	0	0	0	0
Construction/D&D	6,528,000	2,680,000	3,400,000	0	0	0
Operation	26,112,000	0	0	1,200,000	1,200,000	1,200,000
Total Cost	**32,640,000**	**2,680,000**	**3,400,000**	**1,200,000**	**1,200,000**	**1,200,000**

ALTERNATIVE 3 PRETREATMENT REDDICK FTE BREAKDOWN	FY01	FY02	FY03	FY04	FY05	FY06
Contractor Reddick FTE per Alt 3 Pretreatment Activity (FTE)						
STUDIES/PERMITTING - Site Management/Operations	0.0	0.0	0.0	0.0	0.0	0.0
STUDIES/PERMITTING - Site Infrastructure	0.0	0.0	0.0	0.0	0.0	0.0
STUDIES/PERMITTING - National Laboratories	0.0	0.0	0.0	0.0	0.0	0.0
STUDIES/PERMITTING - Site Constructors	0.0	0.0	0.0	0.0	0.0	0.0
STUDIES/PERMITTING - Architecture/Engineering Contract	0.0	0.0	0.0	0.0	0.0	0.0
STUDIES/PERMITTING - Construction Contractor	0.0	0.0	0.0	0.0	0.0	0.0
DESIGN - Site Management/Operations	0.0	0.0	0.0	0.0	0.0	0.0
DESIGN - Site Infrastructure	0.0	0.0	0.0	0.0	0.0	0.0
DESIGN - National Laboratories	0.0	0.0	0.0	0.0	0.0	0.0
DESIGN - Site Constructors	0.0	0.0	0.0	0.0	0.0	0.0
DESIGN - Architecture/Engineering Contractors	0.0	0.0	0.0	0.0	0.0	0.0
DESIGN - Construction Contractor	0.0	0.0	0.0	0.0	0.0	0.0
CONSTRUCTION/D&D - Site Management/Operations	4.0	1.6	2.1	0.0	0.0	0.0
CONSTRUCTION/D&D - Site Infrastructure	0.7	0.3	0.4	0.0	0.0	0.0
CONSTRUCTION/D&D - National Laboratories	0.0	0.0	0.0	0.0	0.0	0.0
CONSTRUCTION/D&D - Site Constructors	2.3	1.0	1.2	0.0	0.0	0.0
CONSTRUCTION/D&D - Architecture/Engineering Contracto	1.8	0.7	0.9	0.0	0.0	0.0
CONSTRUCTION/D&D - Construction Contractor	38.4	15.8	20.0	0.0	0.0	0.0
OPERATIONS - Site Management/Operations	111.0	0.0	0.0	5.1	5.1	5.1
OPERATIONS - Site Infrastructure	19.6	0.0	0.0	0.9	0.9	0.9
OPERATIONS - National Laboratories	14.0	0.0	0.0	0.6	0.6	0.6
OPERATIONS - Site Constructors	0.0	0.0	0.0	0.0	0.0	0.0
OPERATIONS - Architecture/Engineering Contractors	0.0	0.0	0.0	0.0	0.0	0.0
OPERATIONS - Construction Contractor	0.0	0.0	0.0	0.0	0.0	0.0
Worker Category Reddick FTE (FTE)						
Engineer/Management	40.3	6.3	8.0	1.1	1.1	1.1
Crafts	31.2	12.8	16.2	0.0	0.0	0.0
Maintenance	37.5	0.0	0.0	1.7	1.7	1.7
Operators	62.5	0.0	0.0	2.9	2.9	2.9
Infrastructure	20.3	0.3	0.4	0.9	0.9	0.9
Total	**191.8**	**19.4**	**24.6**	**6.6**	**6.6**	**6.6**

ALTERNATIVE 3 PRETREATMENT COST SUMMARY	FY01	FY02	FY03	FY04	FY05	FY06
Studies/Permitting	**3,615,697**	**784,498**	**503,384**	**1,666,652**	**3,335,628**	**2,129,508**
Design	**1,205,232**	**0**	**0**	**0**	**0**	**0**
Construction/D&D	**6,528,000**	**2,680,000**	**3,400,000**	**0**	**0**	**0**
Operation	**45,395,716**	**7,060,478**	**4,530,459**	**16,199,867**	**64,576,940**	**41,660,659**
Total	**56,744,645**	**10,524,976**	**8,433,843**	**17,866,519**	**67,912,568**	**43,790,167**

ALTERNATIVE 3 PRETREATMENT FTE SUMMARY	FY01	FY02	FY03	FY04	FY05	FY06
Engineer/Management	**86.5**	**17.5**	**15.2**	**25.0**	**80.1**	**51.6**
Crafts	**31.2**	**12.8**	**16.2**	**0.0**	**0.0**	**0.0**
Maintenance	**64.6**	**9.9**	**6.4**	**22.8**	**90.7**	**58.5**
Operators	**107.6**	**16.5**	**10.6**	**38.0**	**151.2**	**97.6**
Infrastructure	**34.7**	**5.1**	**3.4**	**11.1**	**40.9**	**26.5**
Total	**324.6**	**61.8**	**51.8**	**96.9**	**363.0**	**234.1**

ALTERNATIVE 3 PRETREATMENT REDDICK COST BREAKDOWN	FY07	FY08	FY09	FY10	FY11	FY12
Activity % of Alt 3 Pretreatment Reddick Costs (%)						
Studies/Permitting	0	0	0	0	0	0
Design	0	0	0	0	0	0
Construction/D&D	0	0	0	0	0	0
Operation	100	100	0	0	0	0
Total Percentage	**100**	**100**	**0**	**0**	**0**	**0**
Alt 3 Pretreatment Activity Reddick Costs($)						
Studies/Permitting	0	0	0	0	0	0
Design	0	0	0	0	0	0
Construction/D&D	0	0	0	0	0	0
Operation	1,200,000	1,200,000	0	0	0	0
Total Cost	**1,200,000**	**1,200,000**	**0**	**0**	**0**	**0**

ALTERNATIVE 3 PRETREATMENT REDDICK FTE BREAKDOWN	FY07	FY08	FY09	FY10	FY11	FY12
Contractor Reddick FTE per Alt 3 Pretreatment Activity (FTE)						
STUDIES/PERMITTING - Site Management/Operations	0.0	0.0	0.0	0.0	0.0	0.0
STUDIES/PERMITTING - Site Infrastructure	0.0	0.0	0.0	0.0	0.0	0.0
STUDIES/PERMITTING - National Laboratories	0.0	0.0	0.0	0.0	0.0	0.0
STUDIES/PERMITTING - Site Constructors	0.0	0.0	0.0	0.0	0.0	0.0
STUDIES/PERMITTING - Architecture/Engineering Contract	0.0	0.0	0.0	0.0	0.0	0.0
STUDIES/PERMITTING - Construction Contractor	0.0	0.0	0.0	0.0	0.0	0.0
DESIGN - Site Management/Operations	0.0	0.0	0.0	0.0	0.0	0.0
DESIGN - Site Infrastructure	0.0	0.0	0.0	0.0	0.0	0.0
DESIGN - National Laboratories	0.0	0.0	0.0	0.0	0.0	0.0
DESIGN - Site Constructors	0.0	0.0	0.0	0.0	0.0	0.0
DESIGN - Architecture/Engineering Contractors	0.0	0.0	0.0	0.0	0.0	0.0
DESIGN - Construction Contractor	0.0	0.0	0.0	0.0	0.0	0.0
CONSTRUCTION/D&D - Site Management/Operations	0.0	0.0	0.0	0.0	0.0	0.0
CONSTRUCTION/D&D - Site Infrastructure	0.0	0.0	0.0	0.0	0.0	0.0
CONSTRUCTION/D&D - National Laboratories	0.0	0.0	0.0	0.0	0.0	0.0
CONSTRUCTION/D&D - Site Constructors	0.0	0.0	0.0	0.0	0.0	0.0
CONSTRUCTION/D&D - Architecture/Engineering Contracto	0.0	0.0	0.0	0.0	0.0	0.0
CONSTRUCTION/D&D - Construction Contractor	0.0	0.0	0.0	0.0	0.0	0.0
OPERATIONS - Site Management/Operations	5.1	5.1	0.0	0.0	0.0	0.0
OPERATIONS - Site Infrastructure	0.9	0.9	0.0	0.0	0.0	0.0
OPERATIONS - National Laboratories	0.6	0.6	0.0	0.0	0.0	0.0
OPERATIONS - Site Constructors	0.0	0.0	0.0	0.0	0.0	0.0
OPERATIONS - Architecture/Engineering Contractors	0.0	0.0	0.0	0.0	0.0	0.0
OPERATIONS - Construction Contractor	0.0	0.0	0.0	0.0	0.0	0.0
Worker Category Reddick FTE (FTE)						
Engineer/Management	1.1	1.1	0.0	0.0	0.0	0.0
Crafts	0.0	0.0	0.0	0.0	0.0	0.0
Maintenance	1.7	1.7	0.0	0.0	0.0	0.0
Operators	2.9	2.9	0.0	0.0	0.0	0.0
Infrastructure	0.9	0.9	0.0	0.0	0.0	0.0
Total	**6.6**	**6.6**	**0.0**	**0.0**	**0.0**	**0.0**

ALTERNATIVE 3 PRETREATMENT COST SUMMARY	FY07	FY08	FY09	FY10	FY11	FY12
Studies/Permitting	**420,842**	**169,853**	**0**	**0**	**0**	**0**
Design	**0**	**0**	**0**	**0**	**0**	**0**
Construction/D&D	**0**	**0**	**0**	**0**	**0**	**0**
Operation	**9,196,000**	**4,427,207**	**0**	**0**	**0**	**0**
Total	**9,616,843**	**4,597,060**	**0**	**0**	**0**	**0**

ALTERNATIVE 3 PRETREATMENT FTE SUMMARY	FY07	FY08	FY09	FY10	FY11	FY12
Engineer/Management	**11.1**	**5.2**	**0.0**	**0.0**	**0.0**	**0.0**
Crafts	**0.0**	**0.0**	**0.0**	**0.0**	**0.0**	**0.0**
Maintenance	**13.0**	**6.3**	**0.0**	**0.0**	**0.0**	**0.0**
Operators	**21.6**	**10.4**	**0.0**	**0.0**	**0.0**	**0.0**
Infrastructure	**6.0**	**2.9**	**0.0**	**0.0**	**0.0**	**0.0**
Total	**51.6**	**24.8**	**0.0**	**0.0**	**0.0**	**0.0**

ALTERNATIVE 3 PRETREATMENT REDDICK COST BREAKDOWN	FY13	FY14	FY15	FY16	FY17	FY18	FY19	FY20	FY21
Activity % of Alt 3 Pretreatment Reddick Costs (%)									
Studies/Permitting	0	0	0	0	0	0	0	0	0
Design	0	0	0	0	0	0	0	0	0
Construction/D&D	0	0	0	0	0	0	0	0	0
Operation	0	0	0	0	0	0	0	0	0
Total Percentage	0	0	0	0	0	0	0	0	0
Alt 3 Pretreatment Activity Reddick Costs($)									
Studies/Permitting	0	0	0	0	0	0	0	0	0
Design	0	0	0	0	0	0	0	0	0
Construction/D&D	0	0	0	0	0	0	0	0	0
Operation	0	0	0	0	0	0	0	0	0
Total Cost	0	0	0	0	0	0	0	0	0

ALTERNATIVE 3 PRETREATMENT REDDICK FTE BREAKDOWN	FY13	FY14	FY15	FY16	FY17	FY18	FY19	FY20	FY21
Contractor Reddick FTE per Alt 3 Pretreatment Activity (FTE)									
STUDIES/PERMITTING - Site Management/Operations	0.0	0.0	0.0	0.0	0.0	0.0	0.0	0.0	0.0
STUDIES/PERMITTING - Site Infrastructure	0.0	0.0	0.0	0.0	0.0	0.0	0.0	0.0	0.0
STUDIES/PERMITTING - National Laboratories	0.0	0.0	0.0	0.0	0.0	0.0	0.0	0.0	0.0
STUDIES/PERMITTING - Site Constructors	0.0	0.0	0.0	0.0	0.0	0.0	0.0	0.0	0.0
STUDIES/PERMITTING - Architecture/Engineering Contract	0.0	0.0	0.0	0.0	0.0	0.0	0.0	0.0	0.0
STUDIES/PERMITTING - Construction Contractor	0.0	0.0	0.0	0.0	0.0	0.0	0.0	0.0	0.0
DESIGN - Site Management/Operations	0.0	0.0	0.0	0.0	0.0	0.0	0.0	0.0	0.0
DESIGN - Site Infrastructure	0.0	0.0	0.0	0.0	0.0	0.0	0.0	0.0	0.0
DESIGN - National Laboratories	0.0	0.0	0.0	0.0	0.0	0.0	0.0	0.0	0.0
DESIGN - Site Constructors	0.0	0.0	0.0	0.0	0.0	0.0	0.0	0.0	0.0
DESIGN - Architecture/Engineering Contractors	0.0	0.0	0.0	0.0	0.0	0.0	0.0	0.0	0.0
DESIGN - Construction Contractor	0.0	0.0	0.0	0.0	0.0	0.0	0.0	0.0	0.0
CONSTRUCTION/D&D - Site Management/Operations	0.0	0.0	0.0	0.0	0.0	0.0	0.0	0.0	0.0
CONSTRUCTION/D&D - Site Infrastructure	0.0	0.0	0.0	0.0	0.0	0.0	0.0	0.0	0.0
CONSTRUCTION/D&D - National Laboratories	0.0	0.0	0.0	0.0	0.0	0.0	0.0	0.0	0.0
CONSTRUCTION/D&D - Site Constructors	0.0	0.0	0.0	0.0	0.0	0.0	0.0	0.0	0.0
CONSTRUCTION/D&D - Architecture/Engineering Contracto	0.0	0.0	0.0	0.0	0.0	0.0	0.0	0.0	0.0
CONSTRUCTION/D&D - Construction Contractor	0.0	0.0	0.0	0.0	0.0	0.0	0.0	0.0	0.0
OPERATIONS - Site Management/Operations	0.0	0.0	0.0	0.0	0.0	0.0	0.0	0.0	0.0
OPERATIONS - Site Infrastructure	0.0	0.0	0.0	0.0	0.0	0.0	0.0	0.0	0.0
OPERATIONS - National Laboratories	0.0	0.0	0.0	0.0	0.0	0.0	0.0	0.0	0.0
OPERATIONS - Site Constructors	0.0	0.0	0.0	0.0	0.0	0.0	0.0	0.0	0.0
OPERATIONS - Architecture/Engineering Contractors	0.0	0.0	0.0	0.0	0.0	0.0	0.0	0.0	0.0
OPERATIONS - Construction Contractor	0.0	0.0	0.0	0.0	0.0	0.0	0.0	0.0	0.0
Worker Category Reddick FTE (FTE)									
Engineer/Management	0.0	0.0	0.0	0.0	0.0	0.0	0.0	0.0	0.0
Crafts	0.0	0.0	0.0	0.0	0.0	0.0	0.0	0.0	0.0
Maintenance	0.0	0.0	0.0	0.0	0.0	0.0	0.0	0.0	0.0
Operators	0.0	0.0	0.0	0.0	0.0	0.0	0.0	0.0	0.0
Infrastructure	0.0	0.0	0.0	0.0	0.0	0.0	0.0	0.0	0.0
Total	0.0	0.0	0.0	0.0	0.0	0.0	0.0	0.0	0.0

ALTERNATIVE 3 PRETREATMENT COST SUMMARY	FY13	FY14	FY15	FY16	FY17	FY18	FY19	FY20	FY21
Studies/Permitting	0	0	0	0	0	0	0	0	0
Design	0	0	0	0	0	0	0	0	0
Construction/D&D	0	0	0	0	0	0	0	0	0
Operation	0	0	0	0	0	0	0	0	0
Total	0	0	0	0	0	0	0	0	0

ALTERNATIVE 3 PRETREATMENT FTE SUMMARY	FY13	FY14	FY15	FY16	FY17	FY18	FY19	FY20	FY21
Engineer/Management	0.0	0.0	0.0	0.0	0.0	0.0	0.0	0.0	0.0
Crafts	0.0	0.0	0.0	0.0	0.0	0.0	0.0	0.0	0.0
Maintenance	0.0	0.0	0.0	0.0	0.0	0.0	0.0	0.0	0.0
Operators	0.0	0.0	0.0	0.0	0.0	0.0	0.0	0.0	0.0
Infrastructure	0.0	0.0	0.0	0.0	0.0	0.0	0.0	0.0	0.0
Total	0.0	0.0	0.0	0.0	0.0	0.0	0.0	0.0	0.0

ALTERNATIVE 3 PRETREATMENT REDDICK COST BREAKDOWN	FY22	FY23	FY24	FY25	FY26	FY27	FY28	FY29	FY30	FY31	FY32
Activity % of Alt 3 Pretreatment Reddick Costs (%)											
Studies/Permitting	0	0	0	0	0	0	0.	0	0	0	0
Design	0	0	0	0	0	0	0	0	0	0	0
Construction/D&D	0	0	0	0	0	0	0	0	0	0	0
Operation	0	0	0	0	0	0	0	0	0	0	0
Total Percentage	0	0	0	0	0	0	0	0	0	0	0
Alt 3 Pretreatment Activity Reddick Costs($)											
Studies/Permitting	0	0	0	0	0	0	0	0	0	0	0
Design	0	0	0	0	0	0	0	0	0	0	0
Construction/D&D	0	0	0	0	0	0	0	0	0	0	0
Operation	0	0	0	0	0	0	0	0	0	0	0
Total Cost	0	0	0	0	0	0	0	0	0	0	0

ALTERNATIVE 3 PRETREATMENT REDDICK FTE BREAKDOWN	FY22	FY23	FY24	FY25	FY26	FY27	FY28	FY29	FY30	FY31	FY32
Contractor Reddick FTE per Alt 3 Pretreatment Activity (FTE)											
STUDIES/PERMITTING - Site Management/Operations	0.0	0.0	0.0	0.0	0.0	0.0	0.0	0.0	0.0	0.0	0.0
STUDIES/PERMITTING - Site Infrastructure	0.0	0.0	0.0	0.0	0.0	0.0	0.0	0.0	0.0	0.0	0.0
STUDIES/PERMITTING - National Laboratories	0.0	0.0	0.0	0.0	0.0	0.0	0.0	0.0	0.0	0.0	0.0
STUDIES/PERMITTING - Site Constructors	0.0	0.0	0.0	0.0	0.0	0.0	0.0	0.0	0.0	0.0	0.0
STUDIES/PERMITTING - Architecture/Engineering Contract	0.0	0.0	0.0	0.0	0.0	0.0	0.0	0.0	0.0	0.0	0.0
STUDIES/PERMITTING - Construction Contractor	0.0	0.0	0.0	0.0	0.0	0.0	0.0	0.0	0.0	0.0	0.0
DESIGN - Site Management/Operations	0.0	0.0	0.0	0.0	0.0	0.0	0.0	0.0	0.0	0.0	0.0
DESIGN - Site Infrastructure	0.0	0.0	0.0	0.0	0.0	0.0	0.0	0.0	0.0	0.0	0.0
DESIGN - National Laboratories	0.0	0.0	0.0	0.0	0.0	0.0	0.0	0.0	0.0	0.0	0.0
DESIGN - Site Constructors	0.0	0.0	0.0	0.0	0.0	0.0	0.0	0.0	0.0	0.0	0.0
DESIGN - Architecture/Engineering Contractors	0.0	0.0	0.0	0.0	0.0	0.0	0.0	0.0	0.0	0.0	0.0
DESIGN - Construction Contractor	0.0	0.0	0.0	0.0	0.0	0.0	0.0	0.0	0.0	0.0	0.0
CONSTRUCTION/D&D - Site Management/Operations	0.0	0.0	0.0	0.0	0.0	0.0	0.0	0.0	0.0	0.0	0.0
CONSTRUCTION/D&D - Site Infrastructure	0.0	0.0	0.0	0.0	0.0	0.0	0.0	0.0	0.0	0.0	0.0
CONSTRUCTION/D&D - National Laboratories	0.0	0.0	0.0	0.0	0.0	0.0	0.0	0.0	0.0	0.0	0.0
CONSTRUCTION/D&D - Site Constructors	0.0	0.0	0.0	0.0	0.0	0.0	0.0	0.0	0.0	0.0	0.0
CONSTRUCTION/D&D - Architecture/Engineering Contracto	0.0	0.0	0.0	0.0	0.0	0.0	0.0	0.0	0.0	0.0	0.0
CONSTRUCTION/D&D - Construction Contractor	0.0	0.0	0.0	0.0	0.0	0.0	0.0	0.0	0.0	0.0	0.0
OPERATIONS - Site Management/Operations	0.0	0.0	0.0	0.0	0.0	0.0	0.0	0.0	0.0	0.0	0.0
OPERATIONS - Site Infrastructure	0.0	0.0	0.0	0.0	0.0	0.0	0.0	0.0	0.0	0.0	0.0
OPERATIONS - National Laboratories	0.0	0.0	0.0	0.0	0.0	0.0	0.0	0.0	0.0	0.0	0.0
OPERATIONS - Site Constructors	0.0	0.0	0.0	0.0	0.0	0.0	0.0	0.0	0.0	0.0	0.0
OPERATIONS - Architecture/Engineering Contractors	0.0	0.0	0.0	0.0	0.0	0.0	0.0	0.0	0.0	0.0	0.0
OPERATIONS - Construction Contractor	0.0	0.0	0.0	0.0	0.0	0.0	0.0	0.0	0.0	0.0	0.0
Worker Category Reddick FTE (FTE)											
Engineer/Management	0.0	0.0	0.0	0.0	0.0	0.0	0.0	0.0	0.0	0.0	0.0
Crafts	0.0	0.0	0.0	0.0	0.0	0.0	0.0	0.0	0.0	0.0	0.0
Maintenance	0.0	0.0	0.0	0.0	0.0	0.0	0.0	0.0	0.0	0.0	0.0
Operators	0.0	0.0	0.0	0.0	0.0	0.0	0.0	0.0	0.0	0.0	0.0
Infrastructure	0.0	0.0	0.0	0.0	0.0	0.0	0.0	0.0	0.0	0.0	0.0
Total	0.0	0.0	0.0	0.0	0.0	0.0	0.0	0.0	0.0	0.0	0.0

ALTERNATIVE 3 PRETREATMENT COST SUMMARY	FY22	FY23	FY24	FY25	FY26	FY27	FY28	FY29	FY30	FY31	FY32
Studies/Permitting	0	0	0	0	0	0	0	0	0	0	0
Design	0	0	0	0	0	0	0	0	0	0	0
Construction/D&D	0	0	0	0	0	0	0	0	0	0	0
Operation	0	0	0	0	0	0	0	0	0	0	0
Total	0	0	0	0	0	0	0	0	0	0	0

ALTERNATIVE 3 PRETREATMENT FTE SUMMARY	FY22	FY23	FY24	FY25	FY26	FY27	FY28	FY29	FY30	FY31	FY32
Engineer/Management	0.0	0.0	0.0	0.0	0.0	0.0	0.0	0.0	0.0	0.0	0.0
Crafts	0.0	0.0	0.0	0.0	0.0	0.0	0.0	0.0	0.0	0.0	0.0
Maintenance	0.0	0.0	0.0	0.0	0.0	0.0	0.0	0.0	0.0	0.0	0.0
Operators	0.0	0.0	0.0	0.0	0.0	0.0	0.0	0.0	0.0	0.0	0.0
Infrastructure	0.0	0.0	0.0	0.0	0.0	0.0	0.0	0.0	0.0	0.0	0.0
Total	0.0	0.0	0.0	0.0	0.0	0.0	0.0	0.0	0.0	0.0	0.0

ALTERNATIVE 3 PRETREATMENT REDDICK COST BREAKDOWN	FY33	FY34	FY35	FY36	FY37	FY38	FY39	FY40	
Activity % of Alt 3 Pretreatment Reddick Costs (%)									
Studies/Permitting	0	0	0	0	0	0	0.	0	
Design	0	0	0	0	0	0	0	0	
Construction/D&D	0	0	0	0	0	0	0	0	
Operation	0	0	0	0	0	0	0	0	
Total Percentage	0	0	0	0	0	0	0	0	
Alt 3 Pretreatment Activity Reddick Costs($)									**Totals**
Studies/Permitting	0	0	0	0	0	0	0	0	5,760,000
Design	0	0	0	0	0	0	0	0	16,656,000
Construction/D&D	0	0	0	0	0	0	0	0	32,432,000
Operation	0	0	0	0	0	0	0	0	47,472,000
Total Cost	0	0	0	0	0	0	0	0	102,320,000

ALTERNATIVE 3 PRETREATMENT REDDICK FTE BREAKDOWN	FY33	FY34	FY35	FY36	FY37	FY38	FY39	FY40	Totals
Contractor Reddick FTE per Alt 3 Pretreatment Activity (FTE)									
STUDIES/PERMITTING - Site Management/Operations	0.0	0.0	0.0	0.0	0.0	0.0	0.0	0.0	33.2
STUDIES/PERMITTING - Site Infrastructure	0.0	0.0	0.0	0.0	0.0	0.0	0.0	0.0	5.9
STUDIES/PERMITTING - National Laboratories	0.0	0.0	0.0	0.0	0.0	0.0	0.0	0.0	1.5
STUDIES/PERMITTING - Site Constructors	0.0	0.0	0.0	0.0	0.0	0.0	0.0	0.0	0.0
STUDIES/PERMITTING - Architecture/Engineering Contract	0.0	0.0	0.0	0.0	0.0	0.0	0.0	0.0	0.0
STUDIES/PERMITTING - Construction Contractor	0.0	0.0	0.0	0.0	0.0	0.0	0.0	0.0	0.0
DESIGN - Site Management/Operations	0.0	0.0	0.0	0.0	0.0	0.0	0.0	0.0	10.1
DESIGN - Site Infrastructure	0.0	0.0	0.0	0.0	0.0	0.0	0.0	0.0	1.8
DESIGN - National Laboratories	0.0	0.0	0.0	0.0	0.0	0.0	0.0	0.0	8.9
DESIGN - Site Constructors	0.0	0.0	0.0	0.0	0.0	0.0	0.0	0.0	5.9
DESIGN - Architecture/Engineering Contractors	0.0	0.0	0.0	0.0	0.0	0.0	0.0	0.0	69.4
DESIGN - Construction Contractor	0.0	0.0	0.0	0.0	0.0	0.0	0.0	0.0	0.0
CONSTRUCTION/D&D - Site Management/Operations	0.0	0.0	0.0	0.0	0.0	0.0	0.0	0.0	19.7
CONSTRUCTION/D&D - Site Infrastructure	0.0	0.0	0.0	0.0	0.0	0.0	0.0	0.0	3.5
CONSTRUCTION/D&D - National Laboratories	0.0	0.0	0.0	0.0	0.0	0.0	0.0	0.0	0.0
CONSTRUCTION/D&D - Site Constructors	0.0	0.0	0.0	0.0	0.0	0.0	0.0	0.0	11.6
CONSTRUCTION/D&D - Architecture/Engineering Contracto	0.0	0.0	0.0	0.0	0.0	0.0	0.0	0.0	9.0
CONSTRUCTION/D&D - Construction Contractor	0.0	0.0	0.0	0.0	0.0	0.0	0.0	0.0	190.8
OPERATIONS - Site Management/Operations	0.0	0.0	0.0	0.0	0.0	0.0	0.0	0.0	201.8
OPERATIONS - Site Infrastructure	0.0	0.0	0.0	0.0	0.0	0.0	0.0	0.0	35.6
OPERATIONS - National Laboratories	0.0	0.0	0.0	0.0	0.0	0.0	0.0	0.0	25.5
OPERATIONS - Site Constructors	0.0	0.0	0.0	0.0	0.0	0.0	0.0	0.0	0.0
OPERATIONS - Architecture/Engineering Contractors	0.0	0.0	0.0	0.0	0.0	0.0	0.0	0.0	0.0
OPERATIONS - Construction Contractor	0.0	0.0	0.0	0.0	0.0	0.0	0.0	0.0	0.0
Worker Category Reddick FTE (FTE)									
Engineer/Management	0.0	0.0	0.0	0.0	0.0	0.0	0.0	0.0	250.7
Crafts	0.0	0.0	0.0	0.0	0.0	0.0	0.0	0.0	154.9
Maintenance	0.0	0.0	0.0	0.0	0.0	0.0	0.0	0.0	68.2
Operators	0.0	0.0	0.0	0.0	0.0	0.0	0.0	0.0	113.6
Infrastructure	0.0	0.0	0.0	0.0	0.0	0.0	0.0	0.0	46.7
Total	0.0	0.0	0.0	0.0	0.0	0.0	0.0	0.0	634.2

ALTERNATIVE 3 PRETREATMENT COST SUMMARY	FY33	FY34	FY35	FY36	FY37	FY38	FY39	FY40	Totals
Studies/Permitting	0	0	0	0	0	0	0	0	51,676,897
Design	0	0	0	0	0	0	0	0	28,274,715
Construction/D&D	0	0	0	0	0	0	0	0	65,095,317
Operation	0	0	0	0	0	0	0	0	340,309,342
Total	0	0	0	0	0	0	0	0	485,356,270

ALTERNATIVE 3 PRETREATMENT FTE SUMMARY	FY33	FY34	FY35	FY36	FY37	FY38	FY39	FY40	Totals
Engineer/Management	0.0	0.0	0.0	0.0	0.0	0.0	0.0	0.0	936.9
Crafts	0.0	0.0	0.0	0.0	0.0	0.0	0.0	0.0	311.0
Maintenance	0.0	0.0	0.0	0.0	0.0	0.0	0.0	0.0	479.4
Operators	0.0	0.0	0.0	0.0	0.0	0.0	0.0	0.0	799.0
Infrastructure	0.0	0.0	0.0	0.0	0.0	0.0	0.0	0.0	259.2
Total	0.0	0.0	0.0	0.0	0.0	0.0	0.0	0.0	2,785.4

FUNCTION - ALTERNATIVE 3 RETRIEVAL	FY95	FY96	FY97	FY98	FY99	FY00
Technology Development (Test) Cost	11,184,609	22,300,346	8,897,309	133,615	0	0
Retrieve SY-101, SY-103	0	0	0	0	816,894	1,277,706
Perform Arm-based SST WR Demo C-106	0	0	0	0	0	0
Project W-151	11,728,347	979,456	1,111,604	257,366	0	0
Project W-211	5,847,000	14,913,124	26,519,114	7,227,763	0	0
Perform sluicing WR Demo C-106	0	0	0	7,715,732	1,936,618	0
Project W-340	4,000,000	8,440,000	168,924		0	0
Subtotal Test Costs	32,759,956	46,632,926	36,696,951	15,334,476	2,753,512	1,277,706
Test Oversight Costs	3,275,996	4,663,293	3,669,695	1,533,448	275,351	127,771
Total Retrieval Base Costs	**36,035,952**	**51,296,219**	**40,366,646**	**16,867,924**	**3,028,863**	**1,405,477**
Total Alt 3 Reddick Costs	3,000,000	6,000,000	12,000,000	19,000,000	40,000,000	40,000,000
Retrieval % of Total Alt 3 Reddick Costs	8	8	8	8	8	8
Alt 3 Retrieval Reddick Costs	**240,000**	**480,000**	**960,000**	**1,520,000**	**3,200,000**	**3,200,000**
Alt 3 Retrieval Actual Costs ($)	**36,275,952**	**51,776,219**	**41,326,646**	**18,387,924**	**6,228,863**	**4,605,477**

ALTERNATIVE 3 RETRIEVAL BASE COST BREAKDOWN	FY95	FY96	FY97	FY98	FY99	FY00
Activity % of Alt 3 Retrieval Base Costs (%)						
Studies/Permitting	55	45	40	20	15	10
Design	10	20	20	30	15	0
Construction/D&D	15	10	20	40	45	45
Operation	20	25	20	10	25	45
Total Percentage	**100**	**100**	**100**	**100**	**100**	**100**
Alt 3 Retrieval Activity Base Costs($)						
Studies/Permitting	19,819,773	23,083,298	16,146,658	3,373,585	454,329	140,548
Design	3,603,595	10,259,244	8,073,329	5,060,377	454,329	0
Construction/D&D	5,405,393	5,129,622	8,073,329	6,747,169	1,362,988	632,464
Operation	7,207,190	12,824,055	8,073,329	1,686,792	757,216	632,464
Total Cost	**36,035,952**	**51,296,219**	**40,366,646**	**16,867,924**	**3,028,863**	**1,405,477**

ALTERNATIVE 3 RETRIEVAL BASE FTE BREAKDOWN	FY95	FY96	FY97	FY98	FY99	FY00
Contractor Base FTE per Alt 3 Retrieval Activity (FTE)						
STUDIES/PERMITTING - Site Management/Operations	90.3	105.1	73.5	15.4	2.1	0.6
STUDIES/PERMITTING - Site Infrastructure	15.9	18.5	13.0	2.7	0.4	0.1
STUDIES/PERMITTING - National Laboratories	26.6	31.0	21.7	4.5	0.6	0.2
STUDIES/PERMITTING - Site Constructors	0.0	0.0	0.0	0.0	0.0	0.0
STUDIES/PERMITTING - Architecture/Engineering Contract	0.0	0.0	0.0	0.0	0.0	0.0
STUDIES/PERMITTING - Construction Contractor	0.0	0.0	0.0	0.0	0.0	0.0
DESIGN - Site Management/Operations	2.2	6.2	4.9	3.1	0.3	0.0
DESIGN - Site Infrastructure	0.4	1.1	0.9	0.5	0.0	0.0
DESIGN - National Laboratories	1.9	5.5	4.3	2.7	0.2	0.0
DESIGN - Site Constructors	1.3	3.7	2.9	1.8	0.2	0.0
DESIGN - Architecture/Engineering Contractors	15.0	42.7	33.6	21.1	1.9	0.0
DESIGN - Construction Contractor	0.0	0.0	0.0	0.0	0.0	0.0
CONSTRUCTION/D&D - Site Management/Operations	1.6	1.6	2.5	2.0	0.4	0.2
CONSTRUCTION/D&D - Site Infrastructure	0.3	0.3	0.4	0.4	0.1	0.0
CONSTRUCTION/D&D - National Laboratories	1.5	1.4	2.2	1.8	0.4	0.2
CONSTRUCTION/D&D - Site Constructors	1.9	1.8	2.9	2.4	0.5	0.2
CONSTRUCTION/D&D - Architecture/Engineering Contracto	1.5	1.4	2.2	1.9	0.4	0.2
CONSTRUCTION/D&D - Construction Contractor	31.8	30.2	47.5	39.7	8.0	3.7
OPERATIONS - Site Management/Operations	24.1	42.8	27.0	5.6	2.5	2.1
OPERATIONS - Site Infrastructure	4.2	7.6	4.8	1.0	0.4	0.4
OPERATIONS - National Laboratories	9.7	17.2	10.8	2.3	1.0	0.8
OPERATIONS - Site Constructors	0.0	0.0	0.0	0.0	0.0	0.0
OPERATIONS - Architecture/Engineering Contractors	0.0	0.0	0.0	0.0	0.0	0.0
OPERATIONS - Construction Contractor	0.0	0.0	0.0	0.0	0.0	0.0

Worker Category Base FTE (FTE)	FY95	FY96	FY97	FY98	FY99	FY00
Engineer/Management	156.5	218.1	167.2	65.7	9.1	2.9
Crafts	25.8	24.5	38.6	32.2	6.5	3.0
Maintenance	10.1	18.0	11.3	2.4	1.1	0.9
Operators	16.9	30.0	18.9	3.9	1.8	1.5
Infrastructure	20.8	27.5	19.0	4.6	0.9	0.5
Total	**230.2**	**318.1**	**255.0**	**108.9**	**19.4**	**8.8**

FUNCTION - ALTERNATIVE 3 RETRIEVAL	FY01	FY02	FY03	FY04	FY05	FY06
Technology Development (Test) Cost	0	0	0	0	0	0
Retrieve SY-101, SY-103	457,321	0	0	0	0	0
Perform Arm-based SST WR Demo C-106	0	1,760,159	9,588,926	656,776	0	0
Project W-151	0	0	0	0	0	0
Project W-211	0	0	0	0	0	0
Perform sluicing WR Demo C-106	0	0	0	0	0	0
Project W-340	0	0	0	0	0	0
Subtotal Test Costs	457,321	1,760,159	9,588,926	656,776	0	0
Test Oversight Costs	45,732	176,016	958,893	65,678	0	0
Total Retrieval Base Costs	**503,053**	**1,936,175**	**10,547,819**	**722,454**	**0**	**0**
Total Alt 3 Reddick Costs	68,000,000	67,000,000	85,000,000	30,000,000	30,000,000	30,000,000
Retrieval % of Total Alt 3 Reddick Costs	8	8	8	8	8	8
Alt 3 Retrieval Reddick Costs	**5,440,000**	**5,360,000**	**6,800,000**	**2,400,000**	**2,400,000**	**2,400,000**
Alt 3 Retrieval Actual Costs ($)	**5,943,053**	**7,296,175**	**17,347,819**	**3,122,454**	**2,400,000**	**2,400,000**

ALTERNATIVE 3 RETRIEVAL BASE COST BREAKDOWN	FY01	FY02	FY03	FY04	FY05	FY06
Activity % of Alt 3 Retrieval Base Costs (%)						
Studies/Permitting	20	30	10	10	0	0
Design	0	0	0	0	0	0
Construction/D&D	20	0	0	0	0	0
Operation	60	70	90	90	0	0
Total Percentage	**100**	**100**	**100**	**100**	**0**	**0**
Alt 3 Retrieval Activity Base Costs($)						
Studies/Permitting	100,611	580,852	1,054,782	72,245	0	0
Design	0	0	0	0	0	0
Construction/D&D	100,611	0	0	0	0	0
Operation	301,832	1,355,322	9,493,037	650,208	0	0
Total Cost	**503,053**	**1,936,175**	**10,547,819**	**722,454**	**0**	**0**

ALTERNATIVE 3 RETRIEVAL BASE FTE BREAKDOWN	FY01	FY02	FY03	FY04	FY05	FY06
Contractor Base FTE per Alt 3 Retrieval Activity (FTE)						
STUDIES/PERMITTING - Site Management/Operations	0.5	2.6	4.8	0.3	0.0	0.0
STUDIES/PERMITTING - Site Infrastructure	0.1	0.5	0.8	0.1	0.0	0.0
STUDIES/PERMITTING - National Laboratories	0.1	0.8	1.4	0.1	0.0	0.0
STUDIES/PERMITTING - Site Constructors	0.0	0.0	0.0	0.0	0.0	0.0
STUDIES/PERMITTING - Architecture/Engineering Contract	0.0	0.0	0.0	0.0	0.0	0.0
STUDIES/PERMITTING - Construction Contractor	0.0	0.0	0.0	0.0	0.0	0.0
DESIGN - Site Management/Operations	0.0	0.0	0.0	0.0	0.0	0.0
DESIGN - Site Infrastructure	0.0	0.0	0.0	0.0	0.0	0.0
DESIGN - National Laboratories	0.0	0.0	0.0	0.0	0.0	0.0
DESIGN - Site Constructors	0.0	0.0	0.0	0.0	0.0	0.0
DESIGN - Architecture/Engineering Contractors	0.0	0.0	0.0	0.0	0.0	0.0
DESIGN - Construction Contractor	0.0	0.0	0.0	0.0	0.0	0.0
CONSTRUCTION/D&D - Site Management/Operations	0.0	0.0	0.0	0.0	0.0	0.0
CONSTRUCTION/D&D - Site Infrastructure	0.0	0.0	0.0	0.0	0.0	0.0
CONSTRUCTION/D&D - National Laboratories	0.0	0.0	0.0	0.0	0.0	0.0
CONSTRUCTION/D&D - Site Constructors	0.0	0.0	0.0	0.0	0.0	0.0
CONSTRUCTION/D&D - Architecture/Engineering Contracto	0.0	0.0	0.0	0.0	0.0	0.0
CONSTRUCTION/D&D - Construction Contractor	0.6	0.0	0.0	0.0	0.0	0.0
OPERATIONS - Site Management/Operations	1.0	4.5	31.7	2.2	0.0	0.0
OPERATIONS - Site Infrastructure	0.2	0.8	5.6	0.4	0.0	0.0
OPERATIONS - National Laboratories	0.4	1.8	12.7	0.9	0.0	0.0
OPERATIONS - Site Constructors	0.0	0.0	0.0	0.0	0.0	0.0
OPERATIONS - Architecture/Engineering Contractors	0.0	0.0	0.0	0.0	0.0	0.0
OPERATIONS - Construction Contractor	0.0	0.0	0.0	0.0	0.0	0.0

Worker Category Base FTE (FTE)	FY01	FY02	FY03	FY04	FY05	FY06
Engineer/Management	1.1	4.7	15.1	1.0	0.0	0.0
Crafts	0.5	0.0	0.0	0.0	0.0	0.0
Maintenance	0.4	1.9	13.3	0.9	0.0	0.0
Operators	0.7	3.2	22.2	1.5	0.0	0.0
Infrastructure	0.3	1.3	6.4	0.4	0.0	0.0
Total	**3.0**	**11.0**	**57.1**	**3.9**	**0.0**	**0.0**

FUNCTION - ALTERNATIVE 3 RETRIEVAL	FY07	FY08	FY09	FY10	FY11	FY12
Technology Development (Test) Cost	0	0	0	0	0	0
Retrieve SY-101, SY-103	0	0	0	0	0	0
Perform Arm-based SST WR Demo C-106	0	0	0	0	0	0
Project W-151	0	0	0	0	0	0
Project W-211	0	0	0	0	0	0
Perform sluicing WR Demo C-106	0	0	0	0	0	0
Project W-340	0	0	0	0	0	0
Subtotal Test Costs	0	0	0	0	0	0
Test Oversight Costs	0	0	0	0	0	0
Total Retrieval Base Costs	0	0	0	0	0	0
Total Alt 3 Reddick Costs	30,000,000	30,000,000	0	0		
Retrieval % of Total Alt 3 Reddick Costs	8	8	0	0		
Alt 3 Retrieval Reddick Costs	2,400,000	2,400,000	0	0	0	0
Alt 3 Retrieval Actual Costs ($)	2,400,000	2,400,000	0	0	0	0

ALTERNATIVE 3 RETRIEVAL BASE COST BREAKDOWN	FY07	FY08	FY09	FY10	FY11	FY12
Activity % of Alt 3 Retrieval Base Costs (%)						
Studies/Permitting	0	0	0	0	0	0
Design	0	0	0	0	0	0
Construction/D&D	0	0	0	0	0	0
Operation	0	0	0	0	0	0
Total Percentage	0	0	0	0	0	0
Alt 3 Retrieval Activity Base Costs($)						
Studies/Permitting	0	0	0	0	0	0
Design	0	0	0	0	0	0
Construction/D&D	0	0	0	0	0	0
Operation	0	0	0	0	0	0
Total Cost	0	0	0	0	0	0

ALTERNATIVE 3 RETRIEVAL BASE FTE BREAKDOWN	FY07	FY08	FY09	FY10	FY11	FY12
Contractor Base FTE per Alt 3 Retrieval Activity (FTE)						
STUDIES/PERMITTING - Site Management/Operations	0.0	0.0	0.0	0.0	0.0	0.0
STUDIES/PERMITTING - Site Infrastructure	0.0	0.0	0.0	0.0	0.0	0.0
STUDIES/PERMITTING - National Laboratories	0.0	0.0	0.0	0.0	0.0	0.0
STUDIES/PERMITTING - Site Constructors	0.0	0.0	0.0	0.0	0.0	0.0
STUDIES/PERMITTING - Architecture/Engineering Contract	0.0	0.0	0.0	0.0	0.0	0.0
STUDIES/PERMITTING - Construction Contractor	0.0	0.0	0.0	0.0	0.0	0.0
DESIGN - Site Management/Operations	0.0	0.0	0.0	0.0	0.0	0.0
DESIGN - Site Infrastructure	0.0	0.0	0.0	0.0	0.0	0.0
DESIGN - National Laboratories	0.0	0.0	0.0	0.0	0.0	0.0
DESIGN - Site Constructors	0.0	0.0	0.0	0.0	0.0	0.0
DESIGN - Architecture/Engineering Contractors	0.0	0.0	0.0	0.0	0.0	0.0
DESIGN - Construction Contractor	0.0	0.0	0.0	0.0	0.0	0.0
CONSTRUCTION/D&D - Site Management/Operations	0.0	0.0	0.0	0.0	0.0	0.0
CONSTRUCTION/D&D - Site Infrastructure	0.0	0.0	0.0	0.0	0.0	0.0
CONSTRUCTION/D&D - National Laboratories	0.0	0.0	0.0	0.0	0.0	0.0
CONSTRUCTION/D&D - Site Constructors	0.0	0.0	0.0	0.0	0.0	0.0
CONSTRUCTION/D&D - Architecture/Engineering Contracto	0.0	0.0	0.0	0.0	0.0	0.0
CONSTRUCTION/D&D - Construction Contractor	0.0	0.0	0.0	0.0	0.0	0.0
OPERATIONS - Site Management/Operations	0.0	0.0	0.0	0.0	0.0	0.0
OPERATIONS - Site Infrastructure	0.0	0.0	0.0	0.0	0.0	0.0
OPERATIONS - National Laboratories	0.0	0.0	0.0	0.0	0.0	0.0
OPERATIONS - Site Constructors	0.0	0.0	0.0	0.0	0.0	0.0
OPERATIONS - Architecture/Engineering Contractors	0.0	0.0	0.0	0.0	0.0	0.0
OPERATIONS - Construction Contractor	0.0	0.0	0.0	0.0	0.0	0.0

Worker Category Base FTE (FTE)	FY07	FY08	FY09	FY10	FY11	FY12
Engineer/Management	0.0	0.0	0.0	0.0	0.0	0.0
Crafts	0.0	0.0	0.0	0.0	0.0	0.0
Maintenance	0.0	0.0	0.0	0.0	0.0	0.0
Operators	0.0	0.0	0.0	0.0	0.0	0.0
Infrastructure	0.0	0.0	0.0	0.0	0.0	0.0
Total	0.0	0.0	0.0	0.0	0.0	0.0

FUNCTION - ALTERNATIVE 3 RETRIEVAL	FY13	FY14	FY15	FY16	FY17	FY18	FY19	FY20	FY21
Technology Development (Test) Cost	0	0	0	0	0	0	0	0	0
Retrieve SY-101, SY-103	0	0	0	0	0	0	0	0	0
Perform Arm-based SST WR Demo C-106	0	0	0	0	0	0	0	0	0
Project W-151	0	0	0	0	0	0	0	0	0
Project W-211	0	0	0	0	0	0	0	0	0
Perform sluicing WR Demo C-106	0	0	0	0	0	0	0	0	0
Project W-340	0	0	0	0	0	0	0	0	0
Subtotal Test Costs	0	0	0	0	0	0	0	0	0
Test Oversight Costs	0	0	0	0	0	0	0	0	0
Total Retrieval Base Costs	0	0	0	0	0	0	0	0	0
Total Alt 3 Reddick Costs									
Retrieval % of Total Alt 3 Reddick Costs									
Alt 3 Retrieval Reddick Costs	0	0	0	0	0	0	0	0	0
Alt 3 Retrieval Actual Costs ($)	0	0	0	0	0	0	0	0	0

ALTERNATIVE 3 RETRIEVAL BASE COST BREAKDOWN	FY13	FY14	FY15	FY16	FY17	FY18	FY19	FY20	FY21
Activity % of Alt 3 Retrieval Base Costs (%)									
Studies/Permitting	0	0	0	0	0	0	0	0	0
Design	0	0	0	0	0	0	0	0	0
Construction/D&D	0	0	0	0	0	0	0	0	0
Operation	0	0	0	0	0	0	0	0	0
Total Percentage	0	0	0	0	0	0	0	0	0
Alt 3 Retrieval Activity Base Costs($)									
Studies/Permitting	0	0	0	0	0	0	0	0	0
Design	0	0	0	0	0	0	0	0	0
Construction/D&D	0	0	0	0	0	0	0	0	0
Operation	0	0	0	0	0	0	0	0	0
Total Cost	0	0	0	0	0	0	0	0	0

ALTERNATIVE 3 RETRIEVAL BASE FTE BREAKDOWN	FY13	FY14	FY15	FY16	FY17	FY18	FY19	FY20	FY21
Contractor Base FTE per Alt 3 Retrieval Activity (FTE)									
STUDIES/PERMITTING - Site Management/Operations	0.0	0.0	0.0	0.0	0.0	0.0	0.0	0.0	0.0
STUDIES/PERMITTING - Site Infrastructure	0.0	0.0	0.0	0.0	0.0	0.0	0.0	0.0	0.0
STUDIES/PERMITTING - National Laboratories	0.0	0.0	0.0	0.0	0.0	0.0	0.0	0.0	0.0
STUDIES/PERMITTING - Site Constructors	0.0	0.0	0.0	0.0	0.0	0.0	0.0	0.0	0.0
STUDIES/PERMITTING - Architecture/Engineering Contract	0.0	0.0	0.0	0.0	0.0	0.0	0.0	0.0	0.0
STUDIES/PERMITTING - Construction Contractor	0.0	0.0	0.0	0.0	0.0	0.0	0.0	0.0	0.0
DESIGN - Site Management/Operations	0.0	0.0	0.0	0.0	0.0	0.0	0.0	0.0	0.0
DESIGN - Site Infrastructure	0.0	0.0	0.0	0.0	0.0	0.0	0.0	0.0	0.0
DESIGN - National Laboratories	0.0	0.0	0.0	0.0	0.0	0.0	0.0	0.0	0.0
DESIGN - Site Constructors	0.0	0.0	0.0	0.0	0.0	0.0	0.0	0.0	0.0
DESIGN - Architecture/Engineering Contractors	0.0	0.0	0.0	0.0	0.0	0.0	0.0	0.0	0.0
DESIGN - Construction Contractor	0.0	0.0	0.0	0.0	0.0	0.0	0.0	0.0	0.0
CONSTRUCTION/D&D - Site Management/Operations	0.0	0.0	0.0	0.0	0.0	0.0	0.0	0.0	0.0
CONSTRUCTION/D&D - Site Infrastructure	0.0	0.0	0.0	0.0	0.0	0.0	0.0	0.0	0.0
CONSTRUCTION/D&D - National Laboratories	0.0	0.0	0.0	0.0	0.0	0.0	0.0	0.0	0.0
CONSTRUCTION/D&D - Site Constructors	0.0	0.0	0.0	0.0	0.0	0.0	0.0	0.0	0.0
CONSTRUCTION/D&D - Architecture/Engineering Contracto	0.0	0.0	0.0	0.0	0.0	0.0	0.0	0.0	0.0
CONSTRUCTION/D&D - Construction Contractor	0.0	0.0	0.0	0.0	0.0	0.0	0.0	0.0	0.0
OPERATIONS - Site Management/Operations	0.0	0.0	0.0	0.0	0.0	0.0	0.0	0.0	0.0
OPERATIONS - Site Infrastructure	0.0	0.0	0.0	0.0	0.0	0.0	0.0	0.0	0.0
OPERATIONS - National Laboratories	0.0	0.0	0.0	0.0	0.0	0.0	0.0	0.0	0.0
OPERATIONS - Site Constructors	0.0	0.0	0.0	0.0	0.0	0.0	0.0	0.0	0.0
OPERATIONS - Architecture/Engineering Contractors	0.0	0.0	0.0	0.0	0.0	0.0	0.0	0.0	0.0
OPERATIONS - Construction Contractor	0.0	0.0	0.0	0.0	0.0	0.0	0.0	0.0	0.0

Worker Category Base FTE (FTE)	FY13	FY14	FY15	FY16	FY17	FY18	FY19	FY20	FY21
Engineer/Management	0.0	0.0	0.0	0.0	0.0	0.0	0.0	0.0	0.0
Crafts	0.0	0.0	0.0	0.0	0.0	0.0	0.0	0.0	0.0
Maintenance	0.0	0.0	0.0	0.0	0.0	0.0	0.0	0.0	0.0
Operators	0.0	0.0	0.0	0.0	0.0	0.0	0.0	0.0	0.0
Infrastructure	0.0	0.0	0.0	0.0	0.0	0.0	0.0	0.0	0.0
Total	0.0	0.0	0.0	0.0	0.0	0.0	0.0	0.0	0.0

FUNCTION - ALTERNATIVE 3 RETRIEVAL	FY22	FY23	FY24	FY25	FY26	FY27	FY28	FY29	FY30	FY31	FY32
Technology Development (Test) Cost	0	0	0	0	0	0	0	0	0	0	0
Retrieve SY-101, SY-103	0	0	0	0	0	0	0	0	0	0	0
Perform Arm-based SST WR Demo C-106	0	0	0	0	0	0	0	0	0	0	0
Project W-151	0	0	0	0	0	0	0	0	0	0	0
Project W-211	0	0	0	0	0	0	0	0	0	0	0
Perform sluicing WR Demo C-106	0	0	0	0	0	0	0	0	0	0	0
Project W-340	0	0	0	0	0	0	0	0	0	0	0
Subtotal Test Costs	0	0	0	0	0	0	0	0	0	0	0
Test Oversight Costs	0	0	0	0	0	0	0	0	0	0	0
Total Retrieval Base Costs	0	0	0	0	0	0	0	0	0	0	0
Total Alt 3 Reddick Costs											
Retrieval % of Total Alt 3 Reddick Costs											
Alt 3 Retrieval Reddick Costs	0	0	0	0	0	0	0	0	0	0	0
Alt 3 Retrieval Actual Costs ($)	0	0	0	0	0	0	0	0	0	0	0

ALTERNATIVE 3 RETRIEVAL BASE COST BREAKDOWN	FY22	FY23	FY24	FY25	FY26	FY27	FY28	FY29	FY30	FY31	FY32
Activity % of Alt 3 Retrieval Base Costs (%)											
Studies/Permitting	0	0	0	0	0	0	0	0	0	0	0
Design	0	0	0	0	0	0	0	0	0	0	0
Construction/D&D	0	0	0	0	0	0	0	0	0	0	0
Operation	0	0	0	0	0	0	0	0	0	0	0
Total Percentage	0	0	0	0	0	0	0	0	0	0	0
Alt 3 Retrieval Activity Base Costs($)											
Studies/Permitting	0	0	0	0	0	0	0	0	0	0	0
Design	0	0	0	0	0	0	0	0	0	0	0
Construction/D&D	0	0	0	0	0	0	0	0	0	0	0
Operation	0	0	0	0	0	0	0	0	0	0	0
Total Cost	0	0	0	0	0	0	0	0	0	0	0

ALTERNATIVE 3 RETRIEVAL BASE FTE BREAKDOWN	FY22	FY23	FY24	FY25	FY26	FY27	FY28	FY29	FY30	FY31	FY32
Contractor Base FTE per Alt 3 Retrieval Activity (FTE)											
STUDIES/PERMITTING - Site Management/Operations	0.0	0.0	0.0	0.0	0.0	0.0	0.0	0.0	0.0	0.0	0.0
STUDIES/PERMITTING - Site Infrastructure	0.0	0.0	0.0	0.0	0.0	0.0	0.0	0.0	0.0	0.0	0.0
STUDIES/PERMITTING - National Laboratories	0.0	0.0	0.0	0.0	0.0	0.0	0.0	0.0	0.0	0.0	0.0
STUDIES/PERMITTING - Site Constructors	0.0	0.0	0.0	0.0	0.0	0.0	0.0	0.0	0.0	0.0	0.0
STUDIES/PERMITTING - Architecture/Engineering Contract	0.0	0.0	0.0	0.0	0.0	0.0	0.0	0.0	0.0	0.0	0.0
STUDIES/PERMITTING - Construction Contractor	0.0	0.0	0.0	0.0	0.0	0.0	0.0	0.0	0.0	0.0	0.0
DESIGN - Site Management/Operations	0.0	0.0	0.0	0.0	0.0	0.0	0.0	0.0	0.0	0.0	0.0
DESIGN - Site Infrastructure	0.0	0.0	0.0	0.0	0.0	0.0	0.0	0.0	0.0	0.0	0.0
DESIGN - National Laboratories	0.0	0.0	0.0	0.0	0.0	0.0	0.0	0.0	0.0	0.0	0.0
DESIGN - Site Constructors	0.0	0.0	0.0	0.0	0.0	0.0	0.0	0.0	0.0	0.0	0.0
DESIGN - Architecture/Engineering Contractors	0.0	0.0	0.0	0.0	0.0	0.0	0.0	0.0	0.0	0.0	0.0
DESIGN - Construction Contractor	0.0	0.0	0.0	0.0	0.0	0.0	0.0	0.0	0.0	0.0	0.0
CONSTRUCTION/D&D - Site Management/Operations	0.0	0.0	0.0	0.0	0.0	0.0	0.0	0.0	0.0	0.0	0.0
CONSTRUCTION/D&D - Site Infrastructure	0.0	0.0	0.0	0.0	0.0	0.0	0.0	0.0	0.0	0.0	0.0
CONSTRUCTION/D&D - National Laboratories	0.0	0.0	0.0	0.0	0.0	0.0	0.0	0.0	0.0	0.0	0.0
CONSTRUCTION/D&D - Site Constructors	0.0	0.0	0.0	0.0	0.0	0.0	0.0	0.0	0.0	0.0	0.0
CONSTRUCTION/D&D - Architecture/Engineering Contracto	0.0	0.0	0.0	0.0	0.0	0.0	0.0	0.0	0.0	0.0	0.0
CONSTRUCTION/D&D - Construction Contractor	0.0	0.0	0.0	0.0	0.0	0.0	0.0	0.0	0.0	0.0	0.0
OPERATIONS - Site Management/Operations	0.0	0.0	0.0	0.0	0.0	0.0	0.0	0.0	0.0	0.0	0.0
OPERATIONS - Site Infrastructure	0.0	0.0	0.0	0.0	0.0	0.0	0.0	0.0	0.0	0.0	0.0
OPERATIONS - National Laboratories	0.0	0.0	0.0	0.0	0.0	0.0	0.0	0.0	0.0	0.0	0.0
OPERATIONS - Site Constructors	0.0	0.0	0.0	0.0	0.0	0.0	0.0	0.0	0.0	0.0	0.0
OPERATIONS - Architecture/Engineering Contractors	0.0	0.0	0.0	0.0	0.0	0.0	0.0	0.0	0.0	0.0	0.0
OPERATIONS - Construction Contractor	0.0	0.0	0.0	0.0	0.0	0.0	0.0	0.0	0.0	0.0	0.0

Worker Category Base FTE (FTE)	FY22	FY23	FY24	FY25	FY26	FY27	FY28	FY29	FY30	FY31	FY32
Engineer/Management	0.0	0.0	0.0	0.0	0.0	0.0	0.0	0.0	0.0	0.0	0.0
Crafts	0.0	0.0	0.0	0.0	0.0	0.0	0.0	0.0	0.0	0.0	0.0
Maintenance	0.0	0.0	0.0	0.0	0.0	0.0	0.0	0.0	0.0	0.0	0.0
Operators	0.0	0.0	0.0	0.0	0.0	0.0	0.0	0.0	0.0	0.0	0.0
Infrastructure	0.0	0.0	0.0	0.0	0.0	0.0	0.0	0.0	0.0	0.0	0.0
Total	0.0	0.0	0.0	0.0	0.0	0.0	0.0	0.0	0.0	0.0	0.0

FUNCTION - ALTERNATIVE 3 RETRIEVAL	FY33	FY34	FY35	FY36	FY37	FY38	FY39	FY40	Totals
Technology Development (Test) Cost	0	0	0	0	0	0	0	0	42,515,879
Retrieve SY-101, SY-103	0	0	0	0	0	0	0	0	2,551,921
Perform Arm-based SST WR Demo C-106	0	0	0	0	0	0	0	0	12,005,861
Project W-151	0	0	0	0	0	0	0	0	14,076,773
Project W-211	0	0	0	0	0	0	0	0	54,507,001
Perform sluicing WR Demo C-106	0	0	0	0	0	0	0	0	9,652,350
Project W-340	0	0	0	0	0	0	0	0	12,608,924
Subtotal Test Costs	0	0	0	0	0	0	0	0	147,918,709
Test Oversight Costs	0	0	0	0	0	0	0	0	14,791,871
Total Retrieval Base Costs	0	0	0	0	0	0	0	0	162,710,580
Total Alt 3 Reddick Costs									490,000,000
Retrieval % of Total Alt 3 Reddick Costs									112
Alt 3 Retrieval Reddick Costs	0	0	0	0	0	0	0	0	39,200,000
Alt 3 Retrieval Actual Costs ($)	0	0	0	0	0	0	0	0	201,910,580

ALTERNATIVE 3 RETRIEVAL BASE COST BREAKDOWN	FY33	FY34	FY35	FY36	FY37	FY38	FY39	FY40
Activity % of Alt 3 Retrieval Base Costs (%)								
Studies/Permitting	0	0	0	0	0	0	0	0
Design	0	0	0	0	0	0	0	0
Construction/D&D	0	0	0	0	0	0	0	0
Operation	0	0	0	0	0	0	0	0
Total Percentage	0	0	0	0	0	0	0	0

Alt 3 Retrieval Activity Base Costs($)									Totals
Studies/Permitting	0	0	0	0	0	0	0	0	64,826,682
Design	0	0	0	0	0	0	0	0	27,450,875
Construction/D&D	0	0	0	0	0	0	0	0	27,451,577
Operation	0	0	0	0	0	0	0	0	42,981,446
Total Cost	0	0	0	0	0	0	0	0	162,710,580

ALTERNATIVE 3 RETRIEVAL BASE FTE BREAKDOWN	FY33	FY34	FY35	FY36	FY37	FY38	FY39	FY40	Totals
Contractor Base FTE per Alt 3 Retrieval Activity (FTE)									
STUDIES/PERMITTING - Site Management/Operations	0.0	0.0	0.0	0.0	0.0	0.0	0.0	0.0	295.2
STUDIES/PERMITTING - Site Infrastructure	0.0	0.0	0.0	0.0	0.0	0.0	0.0	0.0	52.1
STUDIES/PERMITTING - National Laboratories	0.0	0.0	0.0	0.0	0.0	0.0	0.0	0.0	87.0
STUDIES/PERMITTING - Site Constructors	0.0	0.0	0.0	0.0	0.0	0.0	0.0	0.0	0.0
STUDIES/PERMITTING - Architecture/Engineering Contract	0.0	0.0	0.0	0.0	0.0	0.0	0.0	0.0	0.0
STUDIES/PERMITTING - Construction Contractor	0.0	0.0	0.0	0.0	0.0	0.0	0.0	0.0	0.0
DESIGN - Site Management/Operations	0.0	0.0	0.0	0.0	0.0	0.0	0.0	0.0	16.7
DESIGN - Site Infrastructure	0.0	0.0	0.0	0.0	0.0	0.0	0.0	0.0	2.9
DESIGN - National Laboratories	0.0	0.0	0.0	0.0	0.0	0.0	0.0	0.0	14.7
DESIGN - Site Constructors	0.0	0.0	0.0	0.0	0.0	0.0	0.0	0.0	9.8
DESIGN - Architecture/Engineering Contractors	0.0	0.0	0.0	0.0	0.0	0.0	0.0	0.0	114.4
DESIGN - Construction Contractor	0.0	0.0	0.0	0.0	0.0	0.0	0.0	0.0	0.0
CONSTRUCTION/D&D - Site Management/Operations	0.0	0.0	0.0	0.0	0.0	0.0	0.0	0.0	8.3
CONSTRUCTION/D&D - Site Infrastructure	0.0	0.0	0.0	0.0	0.0	0.0	0.0	0.0	1.5
CONSTRUCTION/D&D - National Laboratories	0.0	0.0	0.0	0.0	0.0	0.0	0.0	0.0	7.4
CONSTRUCTION/D&D - Site Constructors	0.0	0.0	0.0	0.0	0.0	0.0	0.0	0.0	9.8
CONSTRUCTION/D&D - Architecture/Engineering Contracto	0.0	0.0	0.0	0.0	0.0	0.0	0.0	0.0	7.6
CONSTRUCTION/D&D - Construction Contractor	0.0	0.0	0.0	0.0	0.0	0.0	0.0	0.0	161.5
OPERATIONS - Site Management/Operations	0.0	0.0	0.0	0.0	0.0	0.0	0.0	0.0	143.5
OPERATIONS - Site Infrastructure	0.0	0.0	0.0	0.0	0.0	0.0	0.0	0.0	25.3
OPERATIONS - National Laboratories	0.0	0.0	0.0	0.0	0.0	0.0	0.0	0.0	57.7
OPERATIONS - Site Constructors	0.0	0.0	0.0	0.0	0.0	0.0	0.0	0.0	0.0
OPERATIONS - Architecture/Engineering Contractors	0.0	0.0	0.0	0.0	0.0	0.0	0.0	0.0	0.0
OPERATIONS - Construction Contractor	0.0	0.0	0.0	0.0	0.0	0.0	0.0	0.0	0.0

Worker Category Base FTE (FTE)	FY33	FY34	FY35	FY36	FY37	FY38	FY39	FY40	Totals
Engineer/Management	0.0	0.0	0.0	0.0	0.0	0.0	0.0	0.0	641.4
Crafts	0.0	0.0	0.0	0.0	0.0	0.0	0.0	0.0	131.1
Maintenance	0.0	0.0	0.0	0.0	0.0	0.0	0.0	0.0	60.4
Operators	0.0	0.0	0.0	0.0	0.0	0.0	0.0	0.0	100.6
Infrastructure	0.0	0.0	0.0	0.0	0.0	0.0	0.0	0.0	81.8
Total	0.0	0.0	0.0	0.0	0.0	0.0	0.0	0.0	1,015.4

ALTERNATIVE 3 RETRIEVAL REDDICK COST BREAKDOWN	FY95	FY96	FY97	FY98	FY99	FY00
Activity % of Alt 3 Retrieval Reddick Costs (%)						
Studies/Permitting	100	100	100	0	0	0
Design	0	0	0	100	100	100
Construction/D&D	0	0	0	0	0	0
Operation	0	0	0	0	0	0
Total Percentage	**100**	**100**	**100**	**100**	**100**	**100**
Alt 3 Retrieval Activity Reddick Costs($)						
Studies/Permitting	240,000	480,000	960,000	0	0	0
Design	0	0	0	1,520,000	3,200,000	3,200,000
Construction/D&D	0	0	0	0	0	0
Operation	0	0	0	0	0	0
Total Cost	**240,000**	**480,000**	**960,000**	**1,520,000**	**3,200,000**	**3,200,000**

ALTERNATIVE 3 RETRIEVAL REDDICK FTE BREAKDOWN	FY95	FY96	FY97	FY98	FY99	FY00
Contractor Reddick FTE per Alt 3 Retrieval Activity (FTE)						
STUDIES/PERMITTING - Site Management/Operations	1.4	2.8	5.5	0.0	0.0	0.0
STUDIES/PERMITTING - Site Infrastructure	0.2	0.5	1.0	0.0	0.0	0.0
STUDIES/PERMITTING - National Laboratories	0.1	0.1	0.3	0.0	0.0	0.0
STUDIES/PERMITTING - Site Constructors	0.0	0.0	0.0	0.0	0.0	0.0
STUDIES/PERMITTING - Architecture/Engineering Contract	0.0	0.0	0.0	0.0	0.0	0.0
STUDIES/PERMITTING - Construction Contractor	0.0	0.0	0.0	0.0	0.0	0.0
DESIGN - Site Management/Operations	0.0	0.0	0.0	0.9	1.9	1.9
DESIGN - Site Infrastructure	0.0	0.0	0.0	0.2	0.3	0.3
DESIGN - National Laboratories	0.0	0.0	0.0	0.8	1.7	1.7
DESIGN - Site Constructors	0.0	0.0	0.0	0.5	1.1	1.1
DESIGN - Architecture/Engineering Contractors	0.0	0.0	0.0	6.3	13.3	13.3
DESIGN - Construction Contractor	0.0	0.0	0.0	0.0	0.0	0.0
CONSTRUCTION/D&D - Site Management/Operations	0.0	0.0	0.0	0.0	0.0	0.0
CONSTRUCTION/D&D - Site Infrastructure	0.0	0.0	0.0	0.0	0.0	0.0
CONSTRUCTION/D&D - National Laboratories	0.0	0.0	0.0	0.0	0.0	0.0
CONSTRUCTION/D&D - Site Constructors	0.0	0.0	0.0	0.0	0.0	0.0
CONSTRUCTION/D&D - Architecture/Engineering Contracto	0.0	0.0	0.0	0.0	0.0	0.0
CONSTRUCTION/D&D - Construction Contractor	0.0	0.0	0.0	0.0	0.0	0.0
OPERATIONS - Site Management/Operations	0.0	0.0	0.0	0.0	0.0	0.0
OPERATIONS - Site Infrastructure	0.0	0.0	0.0	0.0	0.0	0.0
OPERATIONS - National Laboratories	0.0	0.0	0.0	0.0	0.0	0.0
OPERATIONS - Site Constructors	0.0	0.0	0.0	0.0	0.0	0.0
OPERATIONS - Architecture/Engineering Contractors	0.0	0.0	0.0	0.0	0.0	0.0
OPERATIONS - Construction Contractor	0.0	0.0	0.0	0.0	0.0	0.0
Worker Category Reddick FTE (FTE)						
Engineer/Management	1.4	2.9	5.8	8.6	18.1	18.1
Crafts	0.0	0.0	0.0	0.0	0.0	0.0
Maintenance	0.0	0.0	0.0	0.0	0.0	0.0
Operators	0.0	0.0	0.0	0.0	0.0	0.0
Infrastructure	0.2	0.5	1.0	0.2	0.3	0.3
Total	**1.7**	**3.4**	**6.8**	**8.8**	**18.5**	**18.5**

ALTERNATIVE 3 RETRIEVAL COST SUMMARY	FY95	FY96	FY97	FY98	FY99	FY00
Studies/Permitting	20,059,773	23,563,298	17,106,658	3,373,585	454,329	140,548
Design	3,603,595	10,259,244	8,073,329	6,580,377	3,654,329	3,200,000
Construction/D&D	5,405,393	5,129,622	8,073,329	6,747,169	1,362,988	632,464
Operation	7,207,190	12,824,055	8,073,329	1,686,792	757,216	632,464
Total	36,275,952	51,776,219	41,326,646	18,387,924	6,228,863	4,605,477

ALTERNATIVE 3 RETRIEVAL FTE SUMMARY	FY95	FY96	FY97	FY98	FY99	FY00
Engineer/Management	158.0	221.0	173.0	74.4	27.2	21.0
Crafts	25.8	24.5	38.6	32.2	6.5	3.0
Maintenance	10.1	18.0	11.3	2.4	1.1	0.9
Operators	16.9	30.0	18.9	3.9	1.8	1.5
Infrastructure	21.1	28.0	20.0	4.8	1.3	0.9
Total	231.9	321.5	261.8	117.7	37.9	27.3

ALTERNATIVE 3 RETRIEVAL REDDICK COST BREAKDOWN	FY01	FY02	FY03	FY04	FY05	FY06
Activity % of Alt 3 Retrieval Reddick Costs (%)						
Studies/Permitting	0	0	0	0	0	0
Design	0	0	0	0	0	0
Construction/D&D	100	100	100	0	0	0
Operation	0	0	0	100	100	100
Total Percentage	**100**	**100**	**100**	**100**	**100**	**100**
Alt 3 Retrieval Activity Reddick Costs($)						
Studies/Permitting	0	0	0	0	0	0
Design	0	0	0	0	0	0
Construction/D&D	5,440,000	5,360,000	6,800,000	0	0	0
Operation	0	0	0	2,400,000	2,400,000	2,400,000
Total Cost	**5,440,000**	**5,360,000**	**6,800,000**	**2,400,000**	**2,400,000**	**2,400,000**

ALTERNATIVE 3 RETRIEVAL REDDICK FTE BREAKDOWN	FY01	FY02	FY03	FY04	FY05	FY06
Contractor Reddick FTE per Alt 3 Retrieval Activity (FTE)						
STUDIES/PERMITTING - Site Management/Operations	0.0	0.0	0.0	0.0	0.0	0.0
STUDIES/PERMITTING - Site Infrastructure	0.0	0.0	0.0	0.0	0.0	0.0
STUDIES/PERMITTING - National Laboratories	0.0	0.0	0.0	0.0	0.0	0.0
STUDIES/PERMITTING - Site Constructors	0.0	0.0	0.0	0.0	0.0	0.0
STUDIES/PERMITTING - Architecture/Engineering Contract	0.0	0.0	0.0	0.0	0.0	0.0
STUDIES/PERMITTING - Construction Contractor	0.0	0.0	0.0	0.0	0.0	0.0
DESIGN - Site Management/Operations	0.0	0.0	0.0	0.0	0.0	0.0
DESIGN - Site Infrastructure	0.0	0.0	0.0	0.0	0.0	0.0
DESIGN - National Laboratories	0.0	0.0	0.0	0.0	0.0	0.0
DESIGN - Site Constructors	0.0	0.0	0.0	0.0	0.0	0.0
DESIGN - Architecture/Engineering Contractors	0.0	0.0	0.0	0.0	0.0	0.0
DESIGN - Construction Contractor	0.0	0.0	0.0	0.0	0.0	0.0
CONSTRUCTION/D&D - Site Management/Operations	3.3	3.3	4.1	0.0	0.0	0.0
CONSTRUCTION/D&D - Site Infrastructure	0.6	0.6	0.7	0.0	0.0	0.0
CONSTRUCTION/D&D - National Laboratories	0.0	0.0	0.0	0.0	0.0	0.0
CONSTRUCTION/D&D - Site Constructors	1.9	1.9	2.4	0.0	0.0	0.0
CONSTRUCTION/D&D - Architecture/Engineering Contracto	1.5	1.5	1.9	0.0	0.0	0.0
CONSTRUCTION/D&D - Construction Contractor	32.0	31.5	40.0	0.0	0.0	0.0
OPERATIONS - Site Management/Operations	0.0	0.0	0.0	10.2	10.2	10.2
OPERATIONS - Site Infrastructure	0.0	0.0	0.0	1.8	1.8	1.8
OPERATIONS - National Laboratories	0.0	0.0	0.0	1.3	1.3	1.3
OPERATIONS - Site Constructors	0.0	0.0	0.0	0.0	0.0	0.0
OPERATIONS - Architecture/Engineering Contractors	0.0	0.0	0.0	0.0	0.0	0.0
OPERATIONS - Construction Contractor	0.0	0.0	0.0	0.0	0.0	0.0
Worker Category Reddick FTE (FTE)						
Engineer/Management	12.8	12.6	16.0	2.3	2.3	2.3
Crafts	26.0	25.6	32.5	0.0	0.0	0.0
Maintenance	0.0	0.0	0.0	3.4	3.4	3.4
Operators	0.0	0.0	0.0	5.7	5.7	5.7
Infrastructure	0.6	0.6	0.7	1.8	1.8	1.8
Total	**39.3**	**38.8**	**49.2**	**13.3**	**13.3**	**13.3**

ALTERNATIVE 3 RETRIEVAL COST SUMMARY	FY01	FY02	FY03	FY04	FY05	FY06
Studies/Permitting	**100,611**	**580,852**	**1,054,782**	**72,245**	**0**	**0**
Design	**0**	**0**	**0**	**0**	**0**	**0**
Construction/D&D	**5,540,611**	**5,360,000**	**6,800,000**	**0**	**0**	**0**
Operation	**301,832**	**1,355,322**	**9,493,037**	**3,050,208**	**2,400,000**	**2,400,000**
Total	**5,943,053**	**7,298,175**	**17,347,819**	**3,122,454**	**2,400,000**	**2,400,000**

ALTERNATIVE 3 RETRIEVAL FTE SUMMARY	FY01	FY02	FY03	FY04	FY05	FY06
Engineer/Management	**13.9**	**17.3**	**31.1**	**3.3**	**2.3**	**2.3**
Crafts	**26.5**	**25.6**	**32.5**	**0.0**	**0.0**	**0.0**
Maintenance	**0.4**	**1.9**	**13.3**	**4.4**	**3.4**	**3.4**
Operators	**0.7**	**3.2**	**22.2**	**7.3**	**5.7**	**5.7**
Infrastructure	**0.8**	**1.8**	**7.2**	**2.2**	**1.8**	**1.8**
Total	**42.3**	**49.8**	**106.3**	**17.2**	**13.3**	**13.3**

ALTERNATIVE 3 RETRIEVAL REDDICK COST BREAKDOWN	FY07	FY08	FY09	FY10	FY11	FY12
Activity % of Alt 3 Retrieval Reddick Costs (%)						
Studies/Permitting	0	0	0	0	0	0
Design	0	0	0	0	0	0
Construction/D&D	0	0	0	0	0	0
Operation	100	100	0	0	0	0
Total Percentage	**100**	**100**	**0**	**0**	**0**	**0**
Alt 3 Retrieval Activity Reddick Costs($)						
Studies/Permitting	0	0	0	0	0	0
Design	0	0	0	0	0	0
Construction/D&D	0	0	0	0	0	0
Operation	2,400,000	2,400,000	0	0	0	0
Total Cost	**2,400,000**	**2,400,000**	**0**	**0**	**0**	**0**

ALTERNATIVE 3 RETRIEVAL REDDICK FTE BREAKDOWN	FY07	FY08	FY09	FY10	FY11	FY12
Contractor Reddick FTE per Alt 3 Retrieval Activity (FTE)						
STUDIES/PERMITTING - Site Management/Operations	0.0	0.0	0.0	0.0	0.0	0.0
STUDIES/PERMITTING - Site Infrastructure	0.0	0.0	0.0	0.0	0.0	0.0
STUDIES/PERMITTING - National Laboratories	0.0	0.0	0.0	0.0	0.0	0.0
STUDIES/PERMITTING - Site Constructors	0.0	0.0	0.0	0.0	0.0	0.0
STUDIES/PERMITTING - Architecture/Engineering Contract	0.0	0.0	0.0	0.0	0.0	0.0
STUDIES/PERMITTING - Construction Contractor	0.0	0.0	0.0	0.0	0.0	0.0
DESIGN - Site Management/Operations	0.0	0.0	0.0	0.0	0.0	0.0
DESIGN - Site Infrastructure	0.0	0.0	0.0	0.0	0.0	0.0
DESIGN - National Laboratories	0.0	0.0	0.0	0.0	0.0	0.0
DESIGN - Site Constructors	0.0	0.0	0.0	0.0	0.0	0.0
DESIGN - Architecture/Engineering Contractors	0.0	0.0	0.0	0.0	0.0	0.0
DESIGN - Construction Contractor	0.0	0.0	0.0	0.0	0.0	0.0
CONSTRUCTION/D&D - Site Management/Operations	0.0	0.0	0.0	0.0	0.0	0.0
CONSTRUCTION/D&D - Site Infrastructure	0.0	0.0	0.0	0.0	0.0	0.0
CONSTRUCTION/D&D - National Laboratories	0.0	0.0	0.0	0.0	0.0	0.0
CONSTRUCTION/D&D - Site Constructors	0.0	0.0	0.0	0.0	0.0	0.0
CONSTRUCTION/D&D - Architecture/Engineering Contracto	0.0	0.0	0.0	0.0	0.0	0.0
CONSTRUCTION/D&D - Construction Contractor	0.0	0.0	0.0	0.0	0.0	0.0
OPERATIONS - Site Management/Operations	10.2	10.2	0.0	0.0	0.0	0.0
OPERATIONS - Site Infrastructure	1.8	1.8	0.0	0.0	0.0	0.0
OPERATIONS - National Laboratories	1.3	1.3	0.0	0.0	0.0	0.0
OPERATIONS - Site Constructors	0.0	0.0	0.0	0.0	0.0	0.0
OPERATIONS - Architecture/Engineering Contractors	0.0	0.0	0.0	0.0	0.0	0.0
OPERATIONS - Construction Contractor	0.0	0.0	0.0	0.0	0.0	0.0
Worker Category Reddick FTE (FTE)						
Engineer/Management	2.3	2.3	0.0	0.0	0.0	0.0
Crafts	0.0	0.0	0.0	0.0	0.0	0.0
Maintenance	3.4	3.4	0.0	0.0	0.0	0.0
Operators	5.7	5.7	0.0	0.0	0.0	0.0
Infrastructure	1.8	1.8	0.0	0.0	0.0	0.0
Total	**13.3**	**13.3**	**0.0**	**0.0**	**0.0**	**0.0**

ALTERNATIVE 3 RETRIEVAL COST SUMMARY	FY07	FY08	FY09	FY10	FY11	FY12
Studies/Permitting	**0**	**0**	**0**	**0**	**0**	**0**
Design	**0**	**0**	**0**	**0**	**0**	**0**
Construction/D&D	**0**	**0**	**0**	**0**	**0**	**0**
Operation	**2,400,000**	**2,400,000**	**0**	**0**	**0**	**0**
Total	**2,400,000**	**2,400,000**	**0**	**0**	**0**	**0**

ALTERNATIVE 3 RETRIEVAL FTE SUMMARY	FY07	FY08	FY09	FY10	FY11	FY12
Engineer/Management	**2.3**	**2.3**	**0.0**	**0.0**	**0.0**	**0.0**
Crafts	**0.0**	**0.0**	**0.0**	**0.0**	**0.0**	**0.0**
Maintenance	**3.4**	**3.4**	**0.0**	**0.0**	**0.0**	**0.0**
Operators	**5.7**	**5.7**	**0.0**	**0.0**	**0.0**	**0.0**
Infrastructure	**1.8**	**1.8**	**0.0**	**0.0**	**0.0**	**0.0**
Total	**13.3**	**13.3**	**0.0**	**0.0**	**0.0**	**0.0**

ALTERNATIVE 3 RETRIEVAL REDDICK COST BREAKDOWN	FY13	FY14	FY15	FY16	FY17	FY18	FY19	FY20	FY21
Activity % of Alt 3 Retrieval Reddick Costs (%)									
Studies/Permitting	0	0	0	0	0	0	0	0	0
Design	0	0	0	0	0	0	0	0	0
Construction/D&D	0	0	0	0	0	0	0	0	0
Operation	0	0	0	0	0	0	0	0	0
Total Percentage	0	0	0	0	0	0	0	0	0
Alt 3 Retrieval Activity Reddick Costs($)									
Studies/Permitting	0	0	0	0	0	0	0	0	0
Design	0	0	0	0	0	0	0	0	0
Construction/D&D	0	0	0	0	0	0	0	0	0
Operation	0	0	0	0	0	0	0	0	0
Total Cost	0	0	0	0	0	0	0	0	0

ALTERNATIVE 3 RETRIEVAL REDDICK FTE BREAKDOWN	FY13	FY14	FY15	FY16	FY17	FY18	FY19	FY20	FY21
Contractor Reddick FTE per Alt 3 Retrieval Activity (FTE)									
STUDIES/PERMITTING - Site Management/Operations	0.0	0.0	0.0	0.0	0.0	0.0	0.0	0.0	0.0
STUDIES/PERMITTING - Site Infrastructure	0.0	0.0	0.0	0.0	0.0	0.0	0.0	0.0	0.0
STUDIES/PERMITTING - National Laboratories	0.0	0.0	0.0	0.0	0.0	0.0	0.0	0.0	0.0
STUDIES/PERMITTING - Site Constructors	0.0	0.0	0.0	0.0	0.0	0.0	0.0	0.0	0.0
STUDIES/PERMITTING - Architecture/Engineering Contract	0.0	0.0	0.0	0.0	0.0	0.0	0.0	0.0	0.0
STUDIES/PERMITTING - Construction Contractor	0.0	0.0	0.0	0.0	0.0	0.0	0.0	0.0	0.0
DESIGN - Site Management/Operations	0.0	0.0	0.0	0.0	0.0	0.0	0.0	0.0	0.0
DESIGN - Site Infrastructure	0.0	0.0	0.0	0.0	0.0	0.0	0.0	0.0	0.0
DESIGN - National Laboratories	0.0	0.0	0.0	0.0	0.0	0.0	0.0	0.0	0.0
DESIGN - Site Constructors	0.0	0.0	0.0	0.0	0.0	0.0	0.0	0.0	0.0
DESIGN - Architecture/Engineering Contractors	0.0	0.0	0.0	0.0	0.0	0.0	0.0	0.0	0.0
DESIGN - Construction Contractor	0.0	0.0	0.0	0.0	0.0	0.0	0.0	0.0	0.0
CONSTRUCTION/D&D - Site Management/Operations	0.0	0.0	0.0	0.0	0.0	0.0	0.0	0.0	0.0
CONSTRUCTION/D&D - Site Infrastructure	0.0	0.0	0.0	0.0	0.0	0.0	0.0	0.0	0.0
CONSTRUCTION/D&D - National Laboratories	0.0	0.0	0.0	0.0	0.0	0.0	0.0	0.0	0.0
CONSTRUCTION/D&D - Site Constructors	0.0	0.0	0.0	0.0	0.0	0.0	0.0	0.0	0.0
CONSTRUCTION/D&D - Architecture/Engineering Contracto	0.0	0.0	0.0	0.0	0.0	0.0	0.0	0.0	0.0
CONSTRUCTION/D&D - Construction Contractor	0.0	0.0	0.0	0.0	0.0	0.0	0.0	0.0	0.0
OPERATIONS - Site Management/Operations	0.0	0.0	0.0	0.0	0.0	0.0	0.0	0.0	0.0
OPERATIONS - Site Infrastructure	0.0	0.0	0.0	0.0	0.0	0.0	0.0	0.0	0.0
OPERATIONS - National Laboratories	0.0	0.0	0.0	0.0	0.0	0.0	0.0	0.0	0.0
OPERATIONS - Site Constructors	0.0	0.0	0.0	0.0	0.0	0.0	0.0	0.0	0.0
OPERATIONS - Architecture/Engineering Contractors	0.0	0.0	0.0	0.0	0.0	0.0	0.0	0.0	0.0
OPERATIONS - Construction Contractor	0.0	0.0	0.0	0.0	0.0	0.0	0.0	0.0	0.0
Worker Category Reddick FTE (FTE)									
Engineer/Management	0.0	0.0	0.0	0.0	0.0	0.0	0.0	0.0	0.0
Crafts	0.0	0.0	0.0	0.0	0.0	0.0	0.0	0.0	0.0
Maintenance	0.0	0.0	0.0	0.0	0.0	0.0	0.0	0.0	0.0
Operators	0.0	0.0	0.0	0.0	0.0	0.0	0.0	0.0	0.0
Infrastructure	0.0	0.0	0.0	0.0	0.0	0.0	0.0	0.0	0.0
Total	0.0	0.0	0.0	0.0	0.0	0.0	0.0	0.0	0.0

ALTERNATIVE 3 RETRIEVAL COST SUMMARY	FY13	FY14	FY15	FY16	FY17	FY18	FY19	FY20	FY21
Studies/Permitting	0	0	0	0	0	0	0	0	0
Design	0	0	0	0	0	0	0	0	0
Construction/D&D	0	0	0	0	0	0	0	0	0
Operation	0	0	0	0	0	0	0	0	0
Total	0	0	0	0	0	0	0	0	0

ALTERNATIVE 3 RETRIEVAL FTE SUMMARY	FY13	FY14	FY15	FY16	FY17	FY18	FY19	FY20	FY21
Engineer/Management	0.0	0.0	0.0	0.0	0.0	0.0	0.0	0.0	0.0
Crafts	0.0	0.0	0.0	0.0	0.0	0.0	0.0	0.0	0.0
Maintenance	0.0	0.0	0.0	0.0	0.0	0.0	0.0	0.0	0.0
Operators	0.0	0.0	0.0	0.0	0.0	0.0	0.0	0.0	0.0
Infrastructure	0.0	0.0	0.0	0.0	0.0	0.0	0.0	0.0	0.0
Total	0.0	0.0	0.0	0.0	0.0	0.0	0.0	0.0	0.0

ALTERNATIVE 3 RETRIEVAL REDDICK COST BREAKDOWN	FY22	FY23	FY24	FY25	FY26	FY27	FY28	FY29	FY30	FY31	FY32
Activity % of Alt 3 Retrieval Reddick Costs (%)											
Studies/Permitting	0	0	0	0	0	0	0	0	0	0	0
Design	0	0	0	0	0	0	0	0	0	0	0
Construction/D&D	0	0	0	0	0	0	0	0	0	0	0
Operation	0	0	0	0	0	0	0	0	0	0	0
Total Percentage	0	0	0	0	0	0	0	0	0	0	0
Alt 3 Retrieval Activity Reddick Costs($)											
Studies/Permitting	0	0	0	0	0	0	0	0	0	0	0
Design	0	0	0	0	0	0	0	0	0	0	0
Construction/D&D	0	0	0	0	0	0	0	0	0	0	0
Operation	0	0	0	0	0	0	0	0	0	0	0
Total Cost	0	0	0	0	0	0	0	0	0	0	0

ALTERNATIVE 3 RETRIEVAL REDDICK FTE BREAKDOWN	FY22	FY23	FY24	FY25	FY26	FY27	FY28	FY29	FY30	FY31	FY32
Contractor Reddick FTE per Alt 3 Retrieval Activity (FTE)											
STUDIES/PERMITTING - Site Management/Operations	0.0	0.0	0.0	0.0	0.0	0.0	0.0	0.0	0.0	0.0	0.0
STUDIES/PERMITTING - Site Infrastructure	0.0	0.0	0.0	0.0	0.0	0.0	0.0	0.0	0.0	0.0	0.0
STUDIES/PERMITTING - National Laboratories	0.0	0.0	0.0	0.0	0.0	0.0	0.0	0.0	0.0	0.0	0.0
STUDIES/PERMITTING - Site Constructors	0.0	0.0	0.0	0.0	0.0	0.0	0.0	0.0	0.0	0.0	0.0
STUDIES/PERMITTING - Architecture/Engineering Contract	0.0	0.0	0.0	0.0	0.0	0.0	0.0	0.0	0.0	0.0	0.0
STUDIES/PERMITTING - Construction Contractor	0.0	0.0	0.0	0.0	0.0	0.0	0.0	0.0	0.0	0.0	0.0
DESIGN - Site Management/Operations	0.0	0.0	0.0	0.0	0.0	0.0	0.0	0.0	0.0	0.0	0.0
DESIGN - Site Infrastructure	0.0	0.0	0.0	0.0	0.0	0.0	0.0	0.0	0.0	0.0	0.0
DESIGN - National Laboratories	0.0	0.0	0.0	0.0	0.0	0.0	0.0	0.0	0.0	0.0	0.0
DESIGN - Site Constructors	0.0	0.0	0.0	0.0	0.0	0.0	0.0	0.0	0.0	0.0	0.0
DESIGN - Architecture/Engineering Contractors	0.0	0.0	0.0	0.0	0.0	0.0	0.0	0.0	0.0	0.0	0.0
DESIGN - Construction Contractor	0.0	0.0	0.0	0.0	0.0	0.0	0.0	0.0	0.0	0.0	0.0
CONSTRUCTION/D&D - Site Management/Operations	0.0	0.0	0.0	0.0	0.0	0.0	0.0	0.0	0.0	0.0	0.0
CONSTRUCTION/D&D - Site Infrastructure	0.0	0.0	0.0	0.0	0.0	0.0	0.0	0.0	0.0	0.0	0.0
CONSTRUCTION/D&D - National Laboratories	0.0	0.0	0.0	0.0	0.0	0.0	0.0	0.0	0.0	0.0	0.0
CONSTRUCTION/D&D - Site Constructors	0.0	0.0	0.0	0.0	0.0	0.0	0.0	0.0	0.0	0.0	0.0
CONSTRUCTION/D&D - Architecture/Engineering Contracto	0.0	0.0	0.0	0.0	0.0	0.0	0.0	0.0	0.0	0.0	0.0
CONSTRUCTION/D&D - Construction Contractor	0.0	0.0	0.0	0.0	0.0	0.0	0.0	0.0	0.0	0.0	0.0
OPERATIONS - Site Management/Operations	0.0	0.0	0.0	0.0	0.0	0.0	0.0	0.0	0.0	0.0	0.0
OPERATIONS - Site Infrastructure	0.0	0.0	0.0	0.0	0.0	0.0	0.0	0.0	0.0	0.0	0.0
OPERATIONS - National Laboratories	0.0	0.0	0.0	0.0	0.0	0.0	0.0	0.0	0.0	0.0	0.0
OPERATIONS - Site Constructors	0.0	0.0	0.0	0.0	0.0	0.0	0.0	0.0	0.0	0.0	0.0
OPERATIONS - Architecture/Engineering Contractors	0.0	0.0	0.0	0.0	0.0	0.0	0.0	0.0	0.0	0.0	0.0
OPERATIONS - Construction Contractor	0.0	0.0	0.0	0.0	0.0	0.0	0.0	0.0	0.0	0.0	0.0
Worker Category Reddick FTE (FTE)											
Engineer/Management	0.0	0.0	0.0	0.0	0.0	0.0	0.0	0.0	0.0	0.0	0.0
Crafts	0.0	0.0	0.0	0.0	0.0	0.0	0.0	0.0	0.0	0.0	0.0
Maintenance	0.0	0.0	0.0	0.0	0.0	0.0	0.0	0.0	0.0	0.0	0.0
Operators	0.0	0.0	0.0	0.0	0.0	0.0	0.0	0.0	0.0	0.0	0.0
Infrastructure	0.0	0.0	0.0	0.0	0.0	0.0	0.0	0.0	0.0	0.0	0.0
Total	0.0	0.0	0.0	0.0	0.0	0.0	0.0	0.0	0.0	0.0	0.0

ALTERNATIVE 3 RETRIEVAL COST SUMMARY	FY22	FY23	FY24	FY25	FY26	FY27	FY28	FY29	FY30	FY31	FY32
Studies/Permitting	0	0	0	0	0	0	0	0	0	0	0
Design	0	0	0	0	0	0	0	0	0	0	0
Construction/D&D	0	0	0	0	0	0	0	0	0	0	0
Operation	0	0	0	0	0	0	0	0	0	0	0
Total	0	0	0	0	0	0	0	0	0	0	0

ALTERNATIVE 3 RETRIEVAL FTE SUMMARY	FY22	FY23	FY24	FY25	FY26	FY27	FY28	FY29	FY30	FY31	FY32
Engineer/Management	0.0	0.0	0.0	0.0	0.0	0.0	0.0	0.0	0.0	0.0	0.0
Crafts	0.0	0.0	0.0	0.0	0.0	0.0	0.0	0.0	0.0	0.0	0.0
Maintenance	0.0	0.0	0.0	0.0	0.0	0.0	0.0	0.0	0.0	0.0	0.0
Operators	0.0	0.0	0.0	0.0	0.0	0.0	0.0	0.0	0.0	0.0	0.0
Infrastructure	0.0	0.0	0.0	0.0	0.0	0.0	0.0	0.0	0.0	0.0	0.0
Total	0.0	0.0	0.0	0.0	0.0	0.0	0.0	0.0	0.0	0.0	0.0

ALTERNATIVE 3 RETRIEVAL REDDICK COST BREAKDOWN	FY33	FY34	FY35	FY36	FY37	FY38	FY39	FY40	
Activity % of Alt 3 Retrieval Reddick Costs (%)									
Studies/Permitting	0	0	0	0	0	0	0	0	
Design	0	0	0	0	0	0	0	0	
Construction/D&D	0	0	0	0	0	0	0	0	
Operation	0	0	0	0	0	0	0	0	
Total Percentage	0	0	0	0	0	0	0	0	
Alt 3 Retrieval Activity Reddick Costs($)									**Totals**
Studies/Permitting	0	0	0	0	0	0	0	0	1,680,000
Design	0	0	0	0	0	0	0	0	7,920,000
Construction/D&D	0	0	0	0	0	0	0	0	17,600,000
Operation	0	0	0	0	0	0	0	0	12,000,000
Total Cost	0	0	0	0	0	0	0	0	39,200,000

ALTERNATIVE 3 RETRIEVAL REDDICK FTE BREAKDOWN	FY33	FY34	FY35	FY36	FY37	FY38	FY39	FY40	Totals
Contractor Reddick FTE per Alt 3 Retrieval Activity (FTE)									
STUDIES/PERMITTING - Site Management/Operations	0.0	0.0	0.0	0.0	0.0	0.0	0.0	0.0	9.7
STUDIES/PERMITTING - Site Infrastructure	0.0	0.0	0.0	0.0	0.0	0.0	0.0	0.0	1.7
STUDIES/PERMITTING - National Laboratories	0.0	0.0	0.0	0.0	0.0	0.0	0.0	0.0	0.5
STUDIES/PERMITTING - Site Constructors	0.0	0.0	0.0	0.0	0.0	0.0	0.0	0.0	0.0
STUDIES/PERMITTING - Architecture/Engineering Contract	0.0	0.0	0.0	0.0	0.0	0.0	0.0	0.0	0.0
STUDIES/PERMITTING - Construction Contractor	0.0	0.0	0.0	0.0	0.0	0.0	0.0	0.0	0.0
DESIGN - Site Management/Operations	0.0	0.0	0.0	0.0	0.0	0.0	0.0	0.0	4.8
DESIGN - Site Infrastructure	0.0	0.0	0.0	0.0	0.0	0.0	0.0	0.0	0.8
DESIGN - National Laboratories	0.0	0.0	0.0	0.0	0.0	0.0	0.0	0.0	4.2
DESIGN - Site Constructors	0.0	0.0	0.0	0.0	0.0	0.0	0.0	0.0	2.8
DESIGN - Architecture/Engineering Contractors	0.0	0.0	0.0	0.0	0.0	0.0	0.0	0.0	33.0
DESIGN - Construction Contractor	0.0	0.0	0.0	0.0	0.0	0.0	0.0	0.0	0.0
CONSTRUCTION/D&D - Site Management/Operations	0.0	0.0	0.0	0.0	0.0	0.0	0.0	0.0	10.7
CONSTRUCTION/D&D - Site Infrastructure	0.0	0.0	0.0	0.0	0.0	0.0	0.0	0.0	1.9
CONSTRUCTION/D&D - National Laboratories	0.0	0.0	0.0	0.0	0.0	0.0	0.0	0.0	0.0
CONSTRUCTION/D&D - Site Constructors	0.0	0.0	0.0	0.0	0.0	0.0	0.0	0.0	6.3
CONSTRUCTION/D&D - Architecture/Engineering Contracto	0.0	0.0	0.0	0.0	0.0	0.0	0.0	0.0	4.9
CONSTRUCTION/D&D - Construction Contractor	0.0	0.0	0.0	0.0	0.0	0.0	0.0	0.0	103.5
OPERATIONS - Site Management/Operations	0.0	0.0	0.0	0.0	0.0	0.0	0.0	0.0	51.0
OPERATIONS - Site Infrastructure	0.0	0.0	0.0	0.0	0.0	0.0	0.0	0.0	9.0
OPERATIONS - National Laboratories	0.0	0.0	0.0	0.0	0.0	0.0	0.0	0.0	6.4
OPERATIONS - Site Constructors	0.0	0.0	0.0	0.0	0.0	0.0	0.0	0.0	0.0
OPERATIONS - Architecture/Engineering Contractors	0.0	0.0	0.0	0.0	0.0	0.0	0.0	0.0	0.0
OPERATIONS - Construction Contractor	0.0	0.0	0.0	0.0	0.0	0.0	0.0	0.0	0.0
Worker Category Reddick FTE (FTE)									
Engineer/Management	0.0	0.0	0.0	0.0	0.0	0.0	0.0	0.0	107.8
Crafts	0.0	0.0	0.0	0.0	0.0	0.0	0.0	0.0	84.1
Maintenance	0.0	0.0	0.0	0.0	0.0	0.0	0.0	0.0	17.2
Operators	0.0	0.0	0.0	0.0	0.0	0.0	0.0	0.0	28.7
Infrastructure	0.0	0.0	0.0	0.0	0.0	0.0	0.0	0.0	13.4
Total	0.0	0.0	0.0	0.0	0.0	0.0	0.0	0.0	251.3

ALTERNATIVE 3 RETRIEVAL COST SUMMARY	FY33	FY34	FY35	FY36	FY37	FY38	FY39	FY40	Totals
Studies/Permitting	0	0	0	0	0	0	0	0	66,506,682
Design	0	0	0	0	0	0	0	0	35,370,875
Construction/D&D	0	0	0	0	0	0	0	0	45,051,577
Operation	0	0	0	0	0	0	0	0	54,981,446
Total	0	0	0	0	0	0	0	0	201,910,580

ALTERNATIVE 3 RETRIEVAL FTE SUMMARY	FY33	FY34	FY35	FY36	FY37	FY38	FY39	FY40	Totals
Engineer/Management	0.0	0.0	0.0	0.0	0.0	0.0	0.0	0.0	749.3
Crafts	0.0	0.0	0.0	0.0	0.0	0.0	0.0	0.0	215.2
Maintenance	0.0	0.0	0.0	0.0	0.0	0.0	0.0	0.0	77.6
Operators	0.0	0.0	0.0	0.0	0.0	0.0	0.0	0.0	129.3
Infrastructure	0.0	0.0	0.0	0.0	0.0	0.0	0.0	0.0	95.3
Total	0.0	0.0	0.0	0.0	0.0	0.0	0.0	0.0	1,266.7

FUNCTION - ALTERNATIVE 3 LLWV	FY95	FY96	FY97	FY98	FY99	FY00
Technology Development (Test) Cost	27,787,000	15,886,000	14,506,000	15,514,000	14,756,000	13,757,000
Perform LLW Cold Operations	0	0	0	0	0	0
Perform LLW Hot Operations First Year (Hot Test)	0	0	0	0	0	0
Subtotal Test Costs	27,787,000	15,886,000	14,506,000	15,514,000	14,756,000	13,757,000
Test Oversight Costs	2,778,700	1,588,600	1,450,600	1,551,400	1,475,600	1,375,700
Total LLWV Base Costs	**30,565,700**	**17,474,600**	**15,956,600**	**17,065,400**	**16,231,600**	**15,132,700**
Total Alt 3 Reddick Costs	3,000,000	6,000,000	12,000,000	19,000,000	40,000,000	40,000,000
LLWV % of Total Alt 3 Reddick Costs	*11*	*11*	*11*	*11*	*11*	*11*
Alt 3 LLWV Reddick Costs	**330,000**	**660,000**	**1,320,000**	**2,090,000**	**4,400,000**	**4,400,000**
Alt 3 LLWV Actual Costs ($)	**30,895,700**	**18,134,600**	**17,276,600**	**19,155,400**	**20,631,600**	**19,532,700**

ALTERNATIVE 3 LLWV BASE COST BREAKDOWN	FY95	FY96	FY97	FY98	FY99	FY00
Activity % of Alt 3 LLWV Base Costs (%)						
Studies/Permitting	50	50	40	40	30	25
Design	0	0	0	0	0	0
Construction/D&D	10	10	10	10	10	5
Operation	40	40	50	50	60	70
Total Percentage	**100**	**100**	**100**	**100**	**100**	**100**
Alt 3 LLWV Base Costs($)						
Studies/Permitting	15,282,850	8,737,300	6,382,640	6,826,160	4,869,480	3,783,175
Design	0	0	0	0	0	0
Construction/D&D	3,056,570	1,747,460	1,595,660	1,706,540	1,623,160	756,635
Operation	12,226,280	6,989,840	7,978,300	8,532,700	9,738,960	10,592,890
Total Cost	**30,565,700**	**17,474,600**	**15,956,600**	**17,065,400**	**16,231,600**	**15,132,700**

ALTERNATIVE 3 LLWV BASE FTE BREAKDOWN	FY95	FY96	FY97	FY98	FY99	FY00
Contractor FTE per Alt 3 LLWV Activity (FTE)						
STUDIES/PERMITTING - Site Management/Operations	69.6	39.8	29.1	31.1	22.2	17.2
STUDIES/PERMITTING - Site Infrastructure	12.3	7.0	5.1	5.5	3.9	3.0
STUDIES/PERMITTING - National Laboratories	20.5	11.7	8.6	9.2	6.5	5.1
STUDIES/PERMITTING - Site Constructors	0.0	0.0	0.0	0.0	0.0	0.0
STUDIES/PERMITTING - Architecture/Engineering Contract	0.0	0.0	0.0	0.0	0.0	0.0
STUDIES/PERMITTING - Construction Contractor	0.0	0.0	0.0	0.0	0.0	0.0
DESIGN - Site Management/Operations	0.0	0.0	0.0	0.0	0.0	0.0
DESIGN - Site Infrastructure	0.0	0.0	0.0	0.0	0.0	0.0
DESIGN - National Laboratories	0.0	0.0	0.0	0.0	0.0	0.0
DESIGN - Site Constructors	0.0	0.0	0.0	0.0	0.0	0.0
DESIGN - Architecture/Engineering Contractors	0.0	0.0	0.0	0.0	0.0	0.0
DESIGN - Construction Contractor	0.0	0.0	0.0	0.0	0.0	0.0
CONSTRUCTION/D&D - Site Management/Operations	0.9	0.5	0.5	0.5	0.5	0.2
CONSTRUCTION/D&D - Site Infrastructure	0.2	0.1	0.1	0.1	0.1	0.0
CONSTRUCTION/D&D - National Laboratories	0.8	0.5	0.4	0.5	0.4	0.2
CONSTRUCTION/D&D - Site Constructors	1.1	0.6	0.6	0.6	0.6	0.3
CONSTRUCTION/D&D - Architecture/Engineering Contracto	0.8	0.5	0.4	0.5	0.5	0.2
CONSTRUCTION/D&D - Construction Contractor	18.0	10.3	9.4	10.0	9.5	4.5
OPERATIONS - Site Management/Operations	40.8	23.3	26.6	28.5	32.5	35.4
OPERATIONS - Site Infrastructure	7.2	4.1	4.7	5.0	5.7	6.2
OPERATIONS - National Laboratories	16.4	9.4	10.7	11.4	13.1	14.2
OPERATIONS - Site Constructors	0.0	0.0	0.0	0.0	0.0	0.0
OPERATIONS - Architecture/Engineering Contractors	0.0	0.0	0.0	0.0	0.0	0.0
OPERATIONS - Construction Contractor	0.0	0.0	0.0	0.0	0.0	0.0

Worker Category Base FTE (FTE)	FY95	FY96	FY97	FY98	FY99	FY00
Engineer/Management	108.6	62.1	48.8	52.2	41.6	34.0
Crafts	14.6	8.3	7.6	8.2	7.8	3.6
Maintenance	17.2	9.8	11.2	12.0	13.7	14.9
Operators	28.6	16.4	18.7	20.0	22.8	24.8
Infrastructure	19.6	11.2	9.9	10.6	9.7	9.3
Total	**188.6**	**107.8**	**96.2**	**102.9**	**95.5**	**86.6**

FUNCTION - ALTERNATIVE 3 LLWV	FY01	FY02	FY03	FY04	FY05	FY06
Technology Development (Test) Cost	12,939,000	12,026,000	11,461,000	10,127,000	9,810,000	9,810,000
Perform LLW Cold Operations	0	0	27,083,000	39,328,000	32,662,000	0
Perform LLW Hot Operations First Year (Hot Test)	0	0	0	0	44,803,000	0
Subtotal Test Costs	12,939,000	12,026,000	38,544,000	49,455,000	87,275,000	9,810,000
Test Oversight Costs	1,293,900	1,202,600	3,854,400	4,945,500	8,727,500	981,000
Total LLWV Base Costs	**14,232,900**	**13,228,600**	**42,398,400**	**54,400,500**	**96,002,500**	**10,791,000**
Total Alt 3 Reddick Costs	68,000,000	67,000,000	85,000,000	30,000,000	30,000,000	30,000,000
LLWV % of Total Alt 3 Reddick Costs	*11*	*11*	*11*	*11*	*11*	*11*
Alt 3 LLWV Reddick Costs	**7,480,000**	**7,370,000**	**9,350,000**	**3,300,000**	**3,300,000**	**3,300,000**
Alt 3 LLWV Actual Costs ($)	**21,712,900**	**20,598,600**	**51,748,400**	**57,700,500**	**99,302,500**	**14,091,000**

ALTERNATIVE 3 LLWV BASE COST BREAKDOWN	FY01	FY02	FY03	FY04	FY05	FY06
Activity % of Alt 3 LLWV Base Costs (%)						
Studies/Permitting	0	0	0	0	0	0
Design	0	0	0	0	0	0
Construction/D&D	0	0	0	0	0	0
Operation	100	100	100	100	100	100
Total Percentage	**100**	**100**	**100**	**100**	**100**	**100**
Alt 3 LLWV Base Costs($)						
Studies/Permitting	0	0	0	0	0	0
Design	0	0	0	0	0	0
Construction/D&D	0	0	0	0	0	0
Operation	14,232,900	13,228,600	42,398,400	54,400,500	96,002,500	10,791,000
Total Cost	**14,232,900**	**13,228,600**	**42,398,400**	**54,400,500**	**96,002,500**	**10,791,000**

ALTERNATIVE 3 LLWV BASE FTE BREAKDOWN	FY01	FY02	FY03	FY04	FY05	FY06
Contractor FTE per Alt 3 LLWV Activity (FTE)						
STUDIES/PERMITTING - Site Management/Operations	0.0	0.0	0.0	0.0	0.0	0.0
STUDIES/PERMITTING - Site Infrastructure	0.0	0.0	0.0	0.0	0.0	0.0
STUDIES/PERMITTING - National Laboratories	0.0	0.0	0.0	0.0	0.0	0.0
STUDIES/PERMITTING - Site Constructors	0.0	0.0	0.0	0.0	0.0	0.0
STUDIES/PERMITTING - Architecture/Engineering Contract	0.0	0.0	0.0	0.0	0.0	0.0
STUDIES/PERMITTING - Construction Contractor	0.0	0.0	0.0	0.0	0.0	0.0
DESIGN - Site Management/Operations	0.0	0.0	0.0	0.0	0.0	0.0
DESIGN - Site Infrastructure	0.0	0.0	0.0	0.0	0.0	0.0
DESIGN - National Laboratories	0.0	0.0	0.0	0.0	0.0	0.0
DESIGN - Site Constructors	0.0	0.0	0.0	0.0	0.0	0.0
DESIGN - Architecture/Engineering Contractors	0.0	0.0	0.0	0.0	0.0	0.0
DESIGN - Construction Contractor	0.0	0.0	0.0	0.0	0.0	0.0
CONSTRUCTION/D&D - Site Management/Operations	0.0	0.0	0.0	0.0	0.0	0.0
CONSTRUCTION/D&D - Site Infrastructure	0.0	0.0	0.0	0.0	0.0	0.0
CONSTRUCTION/D&D - National Laboratories	0.0	0.0	0.0	0.0	0.0	0.0
CONSTRUCTION/D&D - Site Constructors	0.0	0.0	0.0	0.0	0.0	0.0
CONSTRUCTION/D&D - Architecture/Engineering Contracto	0.0	0.0	0.0	0.0	0.0	0.0
CONSTRUCTION/D&D - Construction Contractor	0.0	0.0	0.0	0.0	0.0	0.0
OPERATIONS - Site Management/Operations	47.5	44.2	141.6	181.7	320.6	36.0
OPERATIONS - Site Infrastructure	8.4	7.8	25.0	32.1	56.6	6.4
OPERATIONS - National Laboratories	19.1	17.7	56.9	73.0	128.8	14.5
OPERATIONS - Site Constructors	0.0	0.0	0.0	0.0	0.0	0.0
OPERATIONS - Architecture/Engineering Contractors	0.0	0.0	0.0	0.0	0.0	0.0
OPERATIONS - Construction Contractor	0.0	0.0	0.0	0.0	0.0	0.0

Worker Category Base FTE (FTE)	FY01	FY02	FY03	FY04	FY05	FY06
Engineer/Management	13.3	12.4	39.7	50.9	89.9	10.1
Crafts	0.0	0.0	0.0	0.0	0.0	0.0
Maintenance	20.0	18.6	59.5	76.4	134.8	15.2
Operators	33.3	31.0	99.2	127.3	224.7	25.3
Infrastructure	8.4	7.8	25.0	32.1	56.6	6.4
Total	**75.0**	**69.7**	**223.4**	**286.7**	**505.9**	**56.9**

FUNCTION - ALTERNATIVE 3 LLWV	FY07	FY08	FY09	FY10	FY11	FY12
Technology Development (Test) Cost	9,810,000	9,760,000	9,711,000	9,660,000	9,596,000	9,486,000
Perform LLW Cold Operations	0	0	0	0	0	0
Perform LLW Hot Operations First Year (Hot Test)	0	0	0	0	0	0
Subtotal Test Costs	9,810,000	9,760,000	9,711,000	9,660,000	9,596,000	9,486,000
Test Oversight Costs	981,000	976,000	971,100	966,000	959,600	948,600
Total LLWV Base Costs	**10,791,000**	**10,736,000**	**10,682,100**	**10,626,000**	**10,555,600**	**10,434,600**
Total Alt 3 Reddick Costs	30,000,000	30,000,000	0	0		
LLWV % of Total Alt 3 Reddick Costs	*11*	*11*	*0*	*0*		
Alt 3 LLWV Reddick Costs	**3,300,000**	**3,300,000**	**0**	**0**	**0**	**0**
Alt 3 LLWV Actual Costs ($)	**14,091,000**	**14,036,000**	**10,682,100**	**10,626,000**	**10,555,600**	**10,434,600**

ALTERNATIVE 3 LLWV BASE COST BREAKDOWN	FY07	FY08	FY09	FY10	FY11	FY12
Activity % of Alt 3 LLWV Base Costs (%)						
Studies/Permitting	0	0	0	0	0	0
Design	0	0	0	0	0	0
Construction/D&D	0	0	0	0	0	0
Operation	100	100	100	100	100	100
Total Percentage	**100**	**100**	**100**	**100**	**100**	**100**
Alt 3 LLWV Base Costs($)						
Studies/Permitting	0	0	0	0	0	0
Design	0	0	0	0	0	0
Construction/D&D	0	0	0	0	0	0
Operation	10,791,000	10,736,000	10,682,100	10,626,000	10,555,600	10,434,600
Total Cost	**10,791,000**	**10,736,000**	**10,682,100**	**10,626,000**	**10,555,600**	**10,434,600**

ALTERNATIVE 3 LLWV BASE FTE BREAKDOWN	FY07	FY08	FY09	FY10	FY11	FY12
Contractor FTE per Alt 3 LLWV Activity (FTE)						
STUDIES/PERMITTING - Site Management/Operations	0.0	0.0	0.0	0.0	0.0	0.0
STUDIES/PERMITTING - Site Infrastructure	0.0	0.0	0.0	0.0	0.0	0.0
STUDIES/PERMITTING - National Laboratories	0.0	0.0	0.0	0.0	0.0	0.0
STUDIES/PERMITTING - Site Constructors	0.0	0.0	0.0	0.0	0.0	0.0
STUDIES/PERMITTING - Architecture/Engineering Contract	0.0	0.0	0.0	0.0	0.0	0.0
STUDIES/PERMITTING - Construction Contractor	0.0	0.0	0.0	0.0	0.0	0.0
DESIGN - Site Management/Operations	0.0	0.0	0.0	0.0	0.0	0.0
DESIGN - Site Infrastructure	0.0	0.0	0.0	0.0	0.0	0.0
DESIGN - National Laboratories	0.0	0.0	0.0	0.0	0.0	0.0
DESIGN - Site Constructors	0.0	0.0	0.0	0.0	0.0	0.0
DESIGN - Architecture/Engineering Contractors	0.0	0.0	0.0	0.0	0.0	0.0
DESIGN - Construction Contractor	0.0	0.0	0.0	0.0	0.0	0.0
CONSTRUCTION/D&D - Site Management/Operations	0.0	0.0	0.0	0.0	0.0	0.0
CONSTRUCTION/D&D - Site Infrastructure	0.0	0.0	0.0	0.0	0.0	0.0
CONSTRUCTION/D&D - National Laboratories	0.0	0.0	0.0	0.0	0.0	0.0
CONSTRUCTION/D&D - Site Constructors	0.0	0.0	0.0	0.0	0.0	0.0
CONSTRUCTION/D&D - Architecture/Engineering Contracto	0.0	0.0	0.0	0.0	0.0	0.0
CONSTRUCTION/D&D - Construction Contractor	0.0	0.0	0.0	0.0	0.0	0.0
OPERATIONS - Site Management/Operations	36.0	35.9	35.7	35.5	35.2	34.8
OPERATIONS - Site Infrastructure	6.4	6.3	6.3	6.3	6.2	6.1
OPERATIONS - National Laboratories	14.5	14.4	14.3	14.3	14.2	14.0
OPERATIONS - Site Constructors	0.0	0.0	0.0	0.0	0.0	0.0
OPERATIONS - Architecture/Engineering Contractors	0.0	0.0	0.0	0.0	0.0	0.0
OPERATIONS - Construction Contractor	0.0	0.0	0.0	0.0	0.0	0.0

Worker Category Base FTE (FTE)	FY07	FY08	FY09	FY10	FY11	FY12
Engineer/Management	10.1	10.1	10.0	9.9	9.9	9.8
Crafts	0.0	0.0	0.0	0.0	0.0	0.0
Maintenance	15.2	15.1	15.0	14.9	14.8	14.7
Operators	25.3	25.1	25.0	24.9	24.7	24.4
Infrastructure	6.4	6.3	6.3	6.3	6.2	6.1
Total	**56.9**	**56.6**	**56.3**	**56.0**	**55.6**	**55.0**

FUNCTION - ALTERNATIVE 3 LLWV	FY13	FY14	FY15	FY16	FY17	FY18	FY19	FY20	FY21
Technology Development (Test) Cost	9,427,000	3,730,000	107,000	88,000	30,000	0	0	0	0
Perform LLW Cold Operations	0	0	0	0	0	0	0	0	0
Perform LLW Hot Operations First Year (Hot Test)	0	0	0	0	0	0	0	0	0
Subtotal Test Costs	9,427,000	3,730,000	107,000	88,000	30,000	0	0	0	0
Test Oversight Costs	942,700	373,000	10,700	8,800	3,000	0	0	0	0
Total LLWV Base Costs	**10,369,700**	**4,103,000**	**117,700**	**96,800**	**33,000**	**0**	**0**	**0**	**0**
Total Alt 3 Reddick Costs									
LLWV % of Total Alt 3 Reddick Costs									
Alt 3 LLWV Reddick Costs	**0**	**0**	**0**	**0**	**0**	**0**	**0**	**0**	**0**
Alt 3 LLWV Actual Costs ($)	**10,369,700**	**4,103,000**	**117,700**	**96,800**	**33,000**	**0**	**0**	**0**	**0**

ALTERNATIVE 3 LLWV BASE COST BREAKDOWN	FY13	FY14	FY15	FY16	FY17	FY18	FY19	FY20	FY21
Activity % of Alt 3 LLWV Base Costs (%)									
Studies/Permitting	0	0	0	0	0	0	0	0	0
Design	0	0	0	0	0	0	0	0	0
Construction/D&D	0	0	0	0	0	0	0	0	0
Operation	100	100	100	100	100	0	0	0	0
Total Percentage	**100**	**100**	**100**	**100**	**100**	**0**	**0**	**0**	**0**
Alt 3 LLWV Base Costs($)									
Studies/Permitting	0	0	0	0	0	0	0	0	0
Design	0	0	0	0	0	0	0	0	0
Construction/D&D	0	0	0	0	0	0	0	0	0
Operation	10,369,700	4,103,000	117,700	96,800	33,000	0	0	0	0
Total Cost	**10,369,700**	**4,103,000**	**117,700**	**96,800**	**33,000**	**0**	**0**	**0**	**0**

ALTERNATIVE 3 LLWV BASE FTE BREAKDOWN	FY13	FY14	FY15	FY16	FY17	FY18	FY19	FY20	FY21
Contractor FTE per Alt 3 LLWV Activity (FTE)									
STUDIES/PERMITTING - Site Management/Operations	0.0	0.0	0.0	0.0	0.0	0.0	0.0	0.0	0.0
STUDIES/PERMITTING - Site Infrastructure	0.0	0.0	0.0	0.0	0.0	0.0	0.0	0.0	0.0
STUDIES/PERMITTING - National Laboratories	0.0	0.0	0.0	0.0	0.0	0.0	0.0	0.0	0.0
STUDIES/PERMITTING - Site Constructors	0.0	0.0	0.0	0.0	0.0	0.0	0.0	0.0	0.0
STUDIES/PERMITTING - Architecture/Engineering Contract	0.0	0.0	0.0	0.0	0.0	0.0	0.0	0.0	0.0
STUDIES/PERMITTING - Construction Contractor	0.0	0.0	0.0	0.0	0.0	0.0	0.0	0.0	0.0
DESIGN - Site Management/Operations	0.0	0.0	0.0	0.0	0.0	0.0	0.0	0.0	0.0
DESIGN - Site Infrastructure	0.0	0.0	0.0	0.0	0.0	0.0	0.0	0.0	0.0
DESIGN - National Laboratories	0.0	0.0	0.0	0.0	0.0	0.0	0.0	0.0	0.0
DESIGN - Site Constructors	0.0	0.0	0.0	0.0	0.0	0.0	0.0	0.0	0.0
DESIGN - Architecture/Engineering Contractors	0.0	0.0	0.0	0.0	0.0	0.0	0.0	0.0	0.0
DESIGN - Construction Contractor	0.0	0.0	0.0	0.0	0.0	0.0	0.0	0.0	0.0
CONSTRUCTION/D&D - Site Management/Operations	0.0	0.0	0.0	0.0	0.0	0.0	0.0	0.0	0.0
CONSTRUCTION/D&D - Site Infrastructure	0.0	0.0	0.0	0.0	0.0	0.0	0.0	0.0	0.0
CONSTRUCTION/D&D - National Laboratories	0.0	0.0	0.0	0.0	0.0	0.0	0.0	0.0	0.0
CONSTRUCTION/D&D - Site Constructors	0.0	0.0	0.0	0.0	0.0	0.0	0.0	0.0	0.0
CONSTRUCTION/D&D - Architecture/Engineering Contracto	0.0	0.0	0.0	0.0	0.0	0.0	0.0	0.0	0.0
CONSTRUCTION/D&D - Construction Contractor	0.0	0.0	0.0	0.0	0.0	0.0	0.0	0.0	0.0
OPERATIONS - Site Management/Operations	34.6	13.7	0.4	0.3	0.1	0.0	0.0	0.0	0.0
OPERATIONS - Site Infrastructure	6.1	2.4	0.1	0.1	0.0	0.0	0.0	0.0	0.0
OPERATIONS - National Laboratories	13.9	5.5	0.2	0.1	0.0	0.0	0.0	0.0	0.0
OPERATIONS - Site Constructors	0.0	0.0	0.0	0.0	0.0	0.0	0.0	0.0	0.0
OPERATIONS - Architecture/Engineering Contractors	0.0	0.0	0.0	0.0	0.0	0.0	0.0	0.0	0.0
OPERATIONS - Construction Contractor	0.0	0.0	0.0	0.0	0.0	0.0	0.0	0.0	0.0

Worker Category Base FTE (FTE)	FY13	FY14	FY15	FY16	FY17	FY18	FY19	FY20	FY21
Engineer/Management	9.7	3.8	0.1	0.1	0.0	0.0	0.0	0.0	0.0
Crafts	0.0	0.0	0.0	0.0	0.0	0.0	0.0	0.0	0.0
Maintenance	14.6	5.8	0.2	0.1	0.0	0.0	0.0	0.0	0.0
Operators	24.3	9.6	0.3	0.2	0.1	0.0	0.0	0.0	0.0
Infrastructure	6.1	2.4	0.1	0.1	0.0	0.0	0.0	0.0	0.0
Total	**54.6**	**21.6**	**0.6**	**0.5**	**0.2**	**0.0**	**0.0**	**0.0**	**0.0**

FUNCTION - ALTERNATIVE 3 LLWV	FY22	FY23	FY24	FY25	FY26	FY27	FY28	FY29	FY30	FY31	FY32
Technology Development (Test) Cost	0	0	0	0	0	0	0	0	0	0	0
Perform LLW Cold Operations	0	0	0	0	0	0	0	0	0	0	0
Perform LLW Hot Operations First Year (Hot Test)	0	0	0	0	0	0	0	0	0	0	0
Subtotal Test Costs	0	0	0	0	0	0	0	0	0	0	0
Test Oversight Costs	0	0	0	0	0	0	0	0	0	0	0
Total LLWV Base Costs	0	0	0	0	0	0	0	0	0	0	0
Total Alt 3 Reddick Costs											
LLWV % of Total Alt 3 Reddick Costs											
Alt 3 LLWV Reddick Costs	0	0	0	0	0	0	0	0	0	0	0
Alt 3 LLWV Actual Costs ($)	0	0	0	0	0	0	0	0	0	0	0

ALTERNATIVE 3 LLWV BASE COST BREAKDOWN	FY22	FY23	FY24	FY25	FY26	FY27	FY28	FY29	FY30	FY31	FY32
Activity % of Alt 3 LLWV Base Costs (%)											
Studies/Permitting	0	0	0	0	0	0	0	0	0	0	0
Design	0	0	0	0	0	0	0	0	0	0	0
Construction/D&D	0	0	0	0	0	0	0	0	0	0	0
Operation	0	0	0	0	0	0	0	0	0	0	0
Total Percentage	0	0	0	0	0	0	0	0	0	0	0
Alt 3 LLWV Base Costs($)											
Studies/Permitting	0	0	0	0	0	0	0	0	0	0	0
Design	0	0	0	0	0	0	0	0	0	0	0
Construction/D&D	0	0	0	0	0	0	0	0	0	0	0
Operation	0	0	0	0	0	0	0	0	0	0	0
Total Cost	0	0	0	0	0	0	0	0	0	0	0

ALTERNATIVE 3 LLWV BASE FTE BREAKDOWN	FY22	FY23	FY24	FY25	FY26	FY27	FY28	FY29	FY30	FY31	FY32
Contractor FTE per Alt 3 LLWV Activity (FTE)											
STUDIES/PERMITTING - Site Management/Operations	0.0	0.0	0.0	0.0	0.0	0.0	0.0	0.0	0.0	0.0	0.0
STUDIES/PERMITTING - Site Infrastructure	0.0	0.0	0.0	0.0	0.0	0.0	0.0	0.0	0.0	0.0	0.0
STUDIES/PERMITTING - National Laboratories	0.0	0.0	0.0	0.0	0.0	0.0	0.0	0.0	0.0	0.0	0.0
STUDIES/PERMITTING - Site Constructors	0.0	0.0	0.0	0.0	0.0	0.0	0.0	0.0	0.0	0.0	0.0
STUDIES/PERMITTING - Architecture/Engineering Contract	0.0	0.0	0.0	0.0	0.0	0.0	0.0	0.0	0.0	0.0	0.0
STUDIES/PERMITTING - Construction Contractor	0.0	0.0	0.0	0.0	0.0	0.0	0.0	0.0	0.0	0.0	0.0
DESIGN - Site Management/Operations	0.0	0.0	0.0	0.0	0.0	0.0	0.0	0.0	0.0	0.0	0.0
DESIGN - Site Infrastructure	0.0	0.0	0.0	0.0	0.0	0.0	0.0	0.0	0.0	0.0	0.0
DESIGN - National Laboratories	0.0	0.0	0.0	0.0	0.0	0.0	0.0	0.0	0.0	0.0	0.0
DESIGN - Site Constructors	0.0	0.0	0.0	0.0	0.0	0.0	0.0	0.0	0.0	0.0	0.0
DESIGN - Architecture/Engineering Contractors	0.0	0.0	0.0	0.0	0.0	0.0	0.0	0.0	0.0	0.0	0.0
DESIGN - Construction Contractor	0.0	0.0	0.0	0.0	0.0	0.0	0.0	0.0	0.0	0.0	0.0
CONSTRUCTION/D&D - Site Management/Operations	0.0	0.0	0.0	0.0	0.0	0.0	0.0	0.0	0.0	0.0	0.0
CONSTRUCTION/D&D - Site Infrastructure	0.0	0.0	0.0	0.0	0.0	0.0	0.0	0.0	0.0	0.0	0.0
CONSTRUCTION/D&D - National Laboratories	0.0	0.0	0.0	0.0	0.0	0.0	0.0	0.0	0.0	0.0	0.0
CONSTRUCTION/D&D - Site Constructors	0.0	0.0	0.0	0.0	0.0	0.0	0.0	0.0	0.0	0.0	0.0
CONSTRUCTION/D&D - Architecture/Engineering Contracto	0.0	0.0	0.0	0.0	0.0	0.0	0.0	0.0	0.0	0.0	0.0
CONSTRUCTION/D&D - Construction Contractor	0.0	0.0	0.0	0.0	0.0	0.0	0.0	0.0	0.0	0.0	0.0
OPERATIONS - Site Management/Operations	0.0	0.0	0.0	0.0	0.0	0.0	0.0	0.0	0.0	0.0	0.0
OPERATIONS - Site Infrastructure	0.0	0.0	0.0	0.0	0.0	0.0	0.0	0.0	0.0	0.0	0.0
OPERATIONS - National Laboratories	0.0	0.0	0.0	0.0	0.0	0.0	0.0	0.0	0.0	0.0	0.0
OPERATIONS - Site Constructors	0.0	0.0	0.0	0.0	0.0	0.0	0.0	0.0	0.0	0.0	0.0
OPERATIONS - Architecture/Engineering Contractors	0.0	0.0	0.0	0.0	0.0	0.0	0.0	0.0	0.0	0.0	0.0
OPERATIONS - Construction Contractor	0.0	0.0	0.0	0.0	0.0	0.0	0.0	0.0	0.0	0.0	0.0

Worker Category Base FTE (FTE)	FY22	FY23	FY24	FY25	FY26	FY27	FY28	FY29	FY30	FY31	FY32
Engineer/Management	0.0	0.0	0.0	0.0	0.0	0.0	0.0	0.0	0.0	0.0	0.0
Crafts	0.0	0.0	0.0	0.0	0.0	0.0	0.0	0.0	0.0	0.0	0.0
Maintenance	0.0	0.0	0.0	0.0	0.0	0.0	0.0	0.0	0.0	0.0	0.0
Operators	0.0	0.0	0.0	0.0	0.0	0.0	0.0	0.0	0.0	0.0	0.0
Infrastructure	0.0	0.0	0.0	0.0	0.0	0.0	0.0	0.0	0.0	0.0	0.0
Total	0.0	0.0	0.0	0.0	0.0	0.0	0.0	0.0	0.0	0.0	0.0

FUNCTION - ALTERNATIVE 3 LLWV	FY33	FY34	FY35	FY36	FY37	FY38	FY39	FY40	Totals
Technology Development (Test) Cost	0	0	0	0	0	0	0	0	239,784,000
Perform LLW Cold Operations	0	0	0	0	0	0	0	0	
Perform LLW Hot Operations First Year (Hot Test)	0	0	0	0	0	0	0	0	44,803,000
Subtotal Test Costs	0	0	0	0	0	0	0	0	383,660,000
Test Oversight Costs	0	0	0	0	0	0	0	0	38,366,000
Total LLWV Base Costs	0	0	0	0	0	0	0	0	422,026,000
Total Alt 3 Reddick Costs									490,000,000
LLWV % of Total Alt 3 Reddick Costs									154
Alt 3 LLWV Reddick Costs	0	0	0	0	0	0	0	0	53,900,000
Alt 3 LLWV Actual Costs ($)	0	0	0	0	0	0	0	0	475,926,000

ALTERNATIVE 3 LLWV BASE COST BREAKDOWN	FY33	FY34	FY35	FY36	FY37	FY38	FY39	FY40	
Activity % of Alt 3 LLWV Base Costs (%)									
Studies/Permitting	0	0	0	0	0	0	0	0	
Design	0	0	0	0	0	0	0	0	
Construction/D&D	0	0	0	0	0	0	0	0	
Operation	0	0	0	0	0	0	0	0	
Total Percentage	0	0	0	0	0	0	0	0	
Alt 3 LLWV Base Costs($)									**Totals**
Studies/Permitting	0	0	0	0	0	0	0	0	45,881,605
Design	0	0	0	0	0	0	0	0	0
Construction/D&D	0	0	0	0	0	0	0	0	10,486,025
Operation	0	0	0	0	0	0	0	0	365,658,370
Total Cost	0	0	0	0	0	0	0	0	422,026,000

ALTERNATIVE 3 LLWV BASE FTE BREAKDOWN	FY33	FY34	FY35	FY36	FY37	FY38	FY39	FY40	Totals
Contractor FTE per Alt 3 LLWV Activity (FTE)									
STUDIES/PERMITTING - Site Management/Operations	0.0	0.0	0.0	0.0	0.0	0.0	0.0	0.0	208.9
STUDIES/PERMITTING - Site Infrastructure	0.0	0.0	0.0	0.0	0.0	0.0	0.0	0.0	36.9
STUDIES/PERMITTING - National Laboratories	0.0	0.0	0.0	0.0	0.0	0.0	0.0	0.0	61.6
STUDIES/PERMITTING - Site Constructors	0.0	0.0	0.0	0.0	0.0	0.0	0.0	0.0	0.0
STUDIES/PERMITTING - Architecture/Engineering Contract	0.0	0.0	0.0	0.0	0.0	0.0	0.0	0.0	0.0
STUDIES/PERMITTING - Construction Contractor	0.0	0.0	0.0	0.0	0.0	0.0	0.0	0.0	0.0
DESIGN - Site Management/Operations	0.0	0.0	0.0	0.0	0.0	0.0	0.0	0.0	0.0
DESIGN - Site Infrastructure	0.0	0.0	0.0	0.0	0.0	0.0	0.0	0.0	0.0
DESIGN - National Laboratories	0.0	0.0	0.0	0.0	0.0	0.0	0.0	0.0	0.0
DESIGN - Site Constructors	0.0	0.0	0.0	0.0	0.0	0.0	0.0	0.0	0.0
DESIGN - Architecture/Engineering Contractors	0.0	0.0	0.0	0.0	0.0	0.0	0.0	0.0	0.0
DESIGN - Construction Contractor	0.0	0.0	0.0	0.0	0.0	0.0	0.0	0.0	0.0
CONSTRUCTION/D&D - Site Management/Operations	0.0	0.0	0.0	0.0	0.0	0.0	0.0	0.0	3.2
CONSTRUCTION/D&D - Site Infrastructure	0.0	0.0	0.0	0.0	0.0	0.0	0.0	0.0	0.6
CONSTRUCTION/D&D - National Laboratories	0.0	0.0	0.0	0.0	0.0	0.0	0.0	0.0	2.8
CONSTRUCTION/D&D - Site Constructors	0.0	0.0	0.0	0.0	0.0	0.0	0.0	0.0	3.7
CONSTRUCTION/D&D - Architecture/Engineering Contracto	0.0	0.0	0.0	0.0	0.0	0.0	0.0	0.0	2.9
CONSTRUCTION/D&D - Construction Contractor	0.0	0.0	0.0	0.0	0.0	0.0	0.0	0.0	61.7
OPERATIONS - Site Management/Operations	0.0	0.0	0.0	0.0	0.0	0.0	0.0	0.0	1,221.0
OPERATIONS - Site Infrastructure	0.0	0.0	0.0	0.0	0.0	0.0	0.0	0.0	215.5
OPERATIONS - National Laboratories	0.0	0.0	0.0	0.0	0.0	0.0	0.0	0.0	490.5
OPERATIONS - Site Constructors	0.0	0.0	0.0	0.0	0.0	0.0	0.0	0.0	0.0
OPERATIONS - Architecture/Engineering Contractors	0.0	0.0	0.0	0.0	0.0	0.0	0.0	0.0	0.0
OPERATIONS - Construction Contractor	0.0	0.0	0.0	0.0	0.0	0.0	0.0	0.0	0.0

Worker Category Base FTE (FTE)	FY33	FY34	FY35	FY36	FY37	FY38	FY39	FY40	Totals
Engineer/Management	0.0	0.0	0.0	0.0	0.0	0.0	0.0	0.0	637.0
Crafts	0.0	0.0	0.0	0.0	0.0	0.0	0.0	0.0	50.1
Maintenance	0.0	0.0	0.0	0.0	0.0	0.0	0.0	0.0	513.5
Operators	0.0	0.0	0.0	0.0	0.0	0.0	0.0	0.0	855.8
Infrastructure	0.0	0.0	0.0	0.0	0.0	0.0	0.0	0.0	252.9
Total	0.0	0.0	0.0	0.0	0.0	0.0	0.0	0.0	2,309.3

ALTERNATIVE 3 LLWV REDDICK COST BREAKDOWN	FY95	FY96	FY97	FY98	FY99	FY00
Activity % of Alt 3 LLWV Reddick Costs (%)						
Studies/Permitting	100	100	100	0	0	0
Design	0	0	0	100	100	100
Construction/D&D	0	0	0	0	0	0
Operation	0	0	0	0	0	0
Total Percentage	100	100	100	100	100	100
Alt 3 LLWV Reddick Costs($)						
Studies/Permitting	330,000	660,000	1,320,000	0	0	0
Design	0	0	0	2,090,000	4,400,000	4,400,000
Construction/D&D	0	0	0	0	0	0
Operation	0	0	0	0	0	0
Total Cost	330,000	660,000	1,320,000	2,090,000	4,400,000	4,400,000

ALTERNATIVE 3 LLWV REDDICK FTE BREAKDOWN	FY95	FY96	FY97	FY98	FY99	FY00
Contractor FTE per Alt 3 LLWV Activity (FTE)						
STUDIES/PERMITTING - Site Management/Operations	1.9	3.8	7.6	0.0	0.0	0.0
STUDIES/PERMITTING - Site Infrastructure	0.3	0.7	1.3	0.0	0.0	0.0
STUDIES/PERMITTING - National Laboratories	0.1	0.2	0.4	0.0	0.0	0.0
STUDIES/PERMITTING - Site Constructors	0.0	0.0	0.0	0.0	0.0	0.0
STUDIES/PERMITTING - Architecture/Engineering Contract	0.0	0.0	0.0	0.0	0.0	0.0
STUDIES/PERMITTING - Construction Contractor	0.0	0.0	0.0	0.0	0.0	0.0
DESIGN - Site Management/Operations	0.0	0.0	0.0	1.3	2.7	2.7
DESIGN - Site Infrastructure	0.0	0.0	0.0	0.2	0.5	0.5
DESIGN - National Laboratories	0.0	0.0	0.0	1.1	2.4	2.4
DESIGN - Site Constructors	0.0	0.0	0.0	0.7	1.6	1.6
DESIGN - Architecture/Engineering Contractors	0.0	0.0	0.0	8.7	18.3	18.3
DESIGN - Construction Contractor	0.0	0.0	0.0	0.0	0.0	0.0
CONSTRUCTION/D&D - Site Management/Operations	0.0	0.0	0.0	0.0	0.0	0.0
CONSTRUCTION/D&D - Site Infrastructure	0.0	0.0	0.0	0.0	0.0	0.0
CONSTRUCTION/D&D - National Laboratories	0.0	0.0	0.0	0.0	0.0	0.0
CONSTRUCTION/D&D - Site Constructors	0.0	0.0	0.0	0.0	0.0	0.0
CONSTRUCTION/D&D - Architecture/Engineering Contracto	0.0	0.0	0.0	0.0	0.0	0.0
CONSTRUCTION/D&D - Construction Contractor	0.0	0.0	0.0	0.0	0.0	0.0
OPERATIONS - Site Management/Operations	0.0	0.0	0.0	0.0	0.0	0.0
OPERATIONS - Site Infrastructure	0.0	0.0	0.0	0.0	0.0	0.0
OPERATIONS - National Laboratories	0.0	0.0	0.0	0.0	0.0	0.0
OPERATIONS - Site Constructors	0.0	0.0	0.0	0.0	0.0	0.0
OPERATIONS - Architecture/Engineering Contractors	0.0	0.0	0.0	0.0	0.0	0.0
OPERATIONS - Construction Contractor	0.0	0.0	0.0	0.0	0.0	0.0
Worker Category Reddick FTE (FTE)						
Engineer/Management	2.0	4.0	8.0	11.8	24.9	24.9
Crafts	0.0	0.0	0.0	0.0	0.0	0.0
Maintenance	0.0	0.0	0.0	0.0	0.0	0.0
Operators	0.0	0.0	0.0	0.0	0.0	0.0
Infrastructure	0.3	0.7	1.3	0.2	0.5	0.5
Total	2.3	4.7	9.3	12.1	25.4	25.4

ALTERNATIVE 3 LLWV COST SUMMARY	FY95	FY96	FY97	FY98	FY99	FY00
Studies/Permitting	15,612,850	9,397,300	7,702,640	6,826,160	4,869,480	3,783,175
Design	0	0	0	2,090,000	4,400,000	4,400,000
Construction/D&D	3,056,570	1,747,460	1,595,660	1,706,540	1,623,160	756,635
Operation	12,226,280	6,989,840	7,978,300	8,532,700	9,738,960	10,592,890
Total	30,895,700	18,134,600	17,276,600	19,155,400	20,631,600	19,532,700

ALTERNATIVE 3 LLWV FTE SUMMARY	FY95	FY96	FY97	FY98	FY99	FY00
Engineer/Management	110.6	66.1	56.8	64.0	66.5	58.9
Crafts	14.6	8.3	7.6	8.2	7.8	3.6
Maintenance	17.2	9.8	11.2	12.0	13.7	14.9
Operators	28.6	16.4	18.7	20.0	22.8	24.8
Infrastructure	20.0	11.9	11.3	10.8	10.2	9.8
Total	191.0	112.5	105.5	115.0	120.9	112.0

ALTERNATIVE 3 LLWV REDDICK COST BREAKDOWN	FY01	FY02	FY03	FY04	FY05	FY06
Activity % of Alt 3 LLWV Reddick Costs (%)						
Studies/Permitting	0	0	0	0	0	0
Design	0	0	0	0	0	0
Construction/D&D	100	100	100	0	0	0
Operation	0	0	0	100	100	100
Total Percentage	**100**	**100**	**100**	**100**	**100**	**100**
Alt 3 LLWV Reddick Costs($)						
Studies/Permitting	0	0	0	0	0	0
Design	0	0	0	0	0	0
Construction/D&D	7,480,000	7,370,000	9,350,000	0	0	0
Operation	0	0	0	3,300,000	3,300,000	3,300,000
Total Cost	**7,480,000**	**7,370,000**	**9,350,000**	**3,300,000**	**3,300,000**	**3,300,000**

ALTERNATIVE 3 LLWV REDDICK FTE BREAKDOWN	FY01	FY02	FY03	FY04	FY05	FY06
Contractor FTE per Alt 3 LLWV Activity (FTE)						
STUDIES/PERMITTING - Site Management/Operations	0.0	0.0	0.0	0.0	0.0	0.0
STUDIES/PERMITTING - Site Infrastructure	0.0	0.0	0.0	0.0	0.0	0.0
STUDIES/PERMITTING - National Laboratories	0.0	0.0	0.0	0.0	0.0	0.0
STUDIES/PERMITTING - Site Constructors	0.0	0.0	0.0	0.0	0.0	0.0
STUDIES/PERMITTING - Architecture/Engineering Contract	0.0	0.0	0.0	0.0	0.0	0.0
STUDIES/PERMITTING - Construction Contractor	0.0	0.0	0.0	0.0	0.0	0.0
DESIGN - Site Management/Operations	0.0	0.0	0.0	0.0	0.0	0.0
DESIGN - Site Infrastructure	0.0	0.0	0.0	0.0	0.0	0.0
DESIGN - National Laboratories	0.0	0.0	0.0	0.0	0.0	0.0
DESIGN - Site Constructors	0.0	0.0	0.0	0.0	0.0	0.0
DESIGN - Architecture/Engineering Contractors	0.0	0.0	0.0	0.0	0.0	0.0
DESIGN - Construction Contractor	0.0	0.0	0.0	0.0	0.0	0.0
CONSTRUCTION/D&D - Site Management/Operations	4.5	4.5	5.7	0.0	0.0	0.0
CONSTRUCTION/D&D - Site Infrastructure	0.8	0.8	1.0	0.0	0.0	0.0
CONSTRUCTION/D&D - National Laboratories	0.0	0.0	0.0	0.0	0.0	0.0
CONSTRUCTION/D&D - Site Constructors	2.7	2.6	3.3	0.0	0.0	0.0
CONSTRUCTION/D&D - Architecture/Engineering Contracto	2.1	2.0	2.6	0.0	0.0	0.0
CONSTRUCTION/D&D - Construction Contractor	44.0	43.4	55.0	0.0	0.0	0.0
OPERATIONS - Site Management/Operations	0.0	0.0	0.0	14.0	14.0	14.0
OPERATIONS - Site Infrastructure	0.0	0.0	0.0	2.5	2.5	2.5
OPERATIONS - National Laboratories	0.0	0.0	0.0	1.8	1.8	1.8
OPERATIONS - Site Constructors	0.0	0.0	0.0	0.0	0.0	0.0
OPERATIONS - Architecture/Engineering Contractors	0.0	0.0	0.0	0.0	0.0	0.0
OPERATIONS - Construction Contractor	0.0	0.0	0.0	0.0	0.0	0.0
Worker Category Reddick FTE (FTE)						
Engineer/Management	17.6	17.3	21.9	3.2	3.2	3.2
Crafts	35.7	35.2	44.7	0.0	0.0	0.0
Maintenance	0.0	0.0	0.0	4.7	4.7	4.7
Operators	0.0	0.0	0.0	7.9	7.9	7.9
Infrastructure	0.8	0.8	1.0	2.5	2.5	2.5
Total	**54.1**	**53.3**	**67.6**	**18.3**	**18.3**	**18.3**

ALTERNATIVE 3 LLWV COST SUMMARY	FY01	FY02	FY03	FY04	FY05	FY06
Studies/Permitting	0	0	0	0	0	0
Design	0	0	0	0	0	0
Construction/D&D	7,480,000	7,370,000	9,350,000	0	0	0
Operation	14,232,900	13,228,600	42,398,400	57,700,500	99,302,500	14,091,000
Total	21,712,900	20,598,600	51,748,400	57,700,500	99,302,500	14,091,000

ALTERNATIVE 3 LLWV FTE SUMMARY	FY01	FY02	FY03	FY04	FY05	FY06
Engineer/Management	30.9	29.7	61.6	54.1	93.0	13.3
Crafts	35.7	35.2	44.7	0.0	0.0	0.0
Maintenance	20.0	18.6	59.5	81.1	139.5	19.9
Operators	33.3	31.0	99.2	135.2	232.6	33.2
Infrastructure	9.2	8.6	26.0	34.5	59.0	8.8
Total	129.1	123.0	291.1	305.0	524.2	75.1

ALTERNATIVE 3 LLWV REDDICK COST BREAKDOWN	FY07	FY08	FY09	FY10	FY11	FY12
Activity % of Alt 3 LLWV Reddick Costs (%)						
Studies/Permitting	0	0	0	0	0	0
Design	0	0	0	0	0	0
Construction/D&D	0	0	0	0	0	0
Operation	100	100	0	0	0	0
Total Percentage	100	100	0	0	0	0
Alt 3 LLWV Reddick Costs($)						
Studies/Permitting	0	0	0	0	0	0
Design	0	0	0	0	0	0
Construction/D&D	0	0	0	0	0	0
Operation	3,300,000	3,300,000	0	0	0	0
Total Cost	3,300,000	3,300,000	0	0	0	0

ALTERNATIVE 3 LLWV REDDICK FTE BREAKDOWN	FY07	FY08	FY09	FY10	FY11	FY12
Contractor FTE per Alt 3 LLWV Activity (FTE)						
STUDIES/PERMITTING - Site Management/Operations	0.0	0.0	0.0	0.0	0.0	0.0
STUDIES/PERMITTING - Site Infrastructure	0.0	0.0	0.0	0.0	0.0	0.0
STUDIES/PERMITTING - National Laboratories	0.0	0.0	0.0	0.0	0.0	0.0
STUDIES/PERMITTING - Site Constructors	0.0	0.0	0.0	0.0	0.0	0.0
STUDIES/PERMITTING - Architecture/Engineering Contract	0.0	0.0	0.0	0.0	0.0	0.0
STUDIES/PERMITTING - Construction Contractor	0.0	0.0	0.0	0.0	0.0	0.0
DESIGN - Site Management/Operations	0.0	0.0	0.0	0.0	0.0	0.0
DESIGN - Site Infrastructure	0.0	0.0	0.0	0.0	0.0	0.0
DESIGN - National Laboratories	0.0	0.0	0.0	0.0	0.0	0.0
DESIGN - Site Constructors	0.0	0.0	0.0	0.0	0.0	0.0
DESIGN - Architecture/Engineering Contractors	0.0	0.0	0.0	0.0	0.0	0.0
DESIGN - Construction Contractor	0.0	0.0	0.0	0.0	0.0	0.0
CONSTRUCTION/D&D - Site Management/Operations	0.0	0.0	0.0	0.0	0.0	0.0
CONSTRUCTION/D&D - Site Infrastructure	0.0	0.0	0.0	0.0	0.0	0.0
CONSTRUCTION/D&D - National Laboratories	0.0	0.0	0.0	0.0	0.0	0.0
CONSTRUCTION/D&D - Site Constructors	0.0	0.0	0.0	0.0	0.0	0.0
CONSTRUCTION/D&D - Architecture/Engineering Contracto	0.0	0.0	0.0	0.0	0.0	0.0
CONSTRUCTION/D&D - Construction Contractor	0.0	0.0	0.0	0.0	0.0	0.0
OPERATIONS - Site Management/Operations	14.0	14.0	0.0	0.0	0.0	0.0
OPERATIONS - Site Infrastructure	2.5	2.5	0.0	0.0	0.0	0.0
OPERATIONS - National Laboratories	1.8	1.8	0.0	0.0	0.0	0.0
OPERATIONS - Site Constructors	0.0	0.0	0.0	0.0	0.0	0.0
OPERATIONS - Architecture/Engineering Contractors	0.0	0.0	0.0	0.0	0.0	0.0
OPERATIONS - Construction Contractor	0.0	0.0	0.0	0.0	0.0	0.0
Worker Category Reddick FTE (FTE)						
Engineer/Management	3.2	3.2	0.0	0.0	0.0	0.0
Crafts	0.0	0.0	0.0	0.0	0.0	0.0
Maintenance	4.7	4.7	0.0	0.0	0.0	0.0
Operators	7.9	7.9	0.0	0.0	0.0	0.0
Infrastructure	2.5	2.5	0.0	0.0	0.0	0.0
Total	18.3	18.3	0.0	0.0	0.0	0.0

ALTERNATIVE 3 LLWV COST SUMMARY	FY07	FY08	FY09	FY10	FY11	FY12
Studies/Permitting	0	0	0	0	0	0
Design	0	0	0	0	0	0
Construction/D&D	0	0	0	0	0	0
Operation	14,091,000	14,036,000	10,682,100	10,626,000	10,555,600	10,434,600
Total	14,091,000	14,036,000	10,682,100	10,626,000	10,555,600	10,434,600

ALTERNATIVE 3 LLWV FTE SUMMARY	FY07	FY08	FY09	FY10	FY11	FY12
Engineer/Management	13.3	13.2	10.0	9.9	9.9	9.8
Crafts	0.0	0.0	0.0	0.0	0.0	0.0
Maintenance	19.9	19.8	15.0	14.9	14.8	14.7
Operators	33.2	33.0	25.0	24.9	24.7	24.4
Infrastructure	8.8	8.8	6.3	6.3	6.2	6.1
Total	75.1	74.9	56.3	56.0	55.6	55.0

ALTERNATIVE 3 LLWV REDDICK COST BREAKDOWN	FY13	FY14	FY15	FY16	FY17	FY18	FY19	FY20	FY21
Activity % of Alt 3 LLWV Reddick Costs (%)									
Studies/Permitting	0	0	0	0	0	0	0	0	0
Design	0	0	0	0	0	0	0	0	0
Construction/D&D	0	0	0	0	0	0	0	0	0
Operation	0	0	0	0	0	0	0	0	0
Total Percentage	0	0	0	0	0	0	0	0	0
Alt 3 LLWV Reddick Costs($)									
Studies/Permitting	0	0	0	0	0	0	0	0	0
Design	0	0	0	0	0	0	0	0	0
Construction/D&D	0	0	0	0	0	0	0	0	0
Operation	0	0	0	0	0	0	0	0	0
Total Cost	0	0	0	0	0	0	0	0	0

ALTERNATIVE 3 LLWV REDDICK FTE BREAKDOWN	FY13	FY14	FY15	FY16	FY17	FY18	FY19	FY20	FY21
Contractor FTE per Alt 3 LLWV Activity (FTE)									
STUDIES/PERMITTING - Site Management/Operations	0.0	0.0	0.0	0.0	0.0	0.0	0.0	0.0	0.0
STUDIES/PERMITTING - Site Infrastructure	0.0	0.0	0.0	0.0	0.0	0.0	0.0	0.0	0.0
STUDIES/PERMITTING - National Laboratories	0.0	0.0	0.0	0.0	0.0	0.0	0.0	0.0	0.0
STUDIES/PERMITTING - Site Constructors	0.0	0.0	0.0	0.0	0.0	0.0	0.0	0.0	0.0
STUDIES/PERMITTING - Architecture/Engineering Contract	0.0	0.0	0.0	0.0	0.0	0.0	0.0	0.0	0.0
STUDIES/PERMITTING - Construction Contractor	0.0	0.0	0.0	0.0	0.0	0.0	0.0	0.0	0.0
DESIGN - Site Management/Operations	0.0	0.0	0.0	0.0	0.0	0.0	0.0	0.0	0.0
DESIGN - Site Infrastructure	0.0	0.0	0.0	0.0	0.0	0.0	0.0	0.0	0.0
DESIGN - National Laboratories	0.0	0.0	0.0	0.0	0.0	0.0	0.0	0.0	0.0
DESIGN - Site Constructors	0.0	0.0	0.0	0.0	0.0	0.0	0.0	0.0	0.0
DESIGN - Architecture/Engineering Contractors	0.0	0.0	0.0	0.0	0.0	0.0	0.0	0.0	0.0
DESIGN - Construction Contractor	0.0	0.0	0.0	0.0	0.0	0.0	0.0	0.0	0.0
CONSTRUCTION/D&D - Site Management/Operations	0.0	0.0	0.0	0.0	0.0	0.0	0.0	0.0	0.0
CONSTRUCTION/D&D - Site Infrastructure	0.0	0.0	0.0	0.0	0.0	0.0	0.0	0.0	0.0
CONSTRUCTION/D&D - National Laboratories	0.0	0.0	0.0	0.0	0.0	0.0	0.0	0.0	0.0
CONSTRUCTION/D&D - Site Constructors	0.0	0.0	0.0	0.0	0.0	0.0	0.0	0.0	0.0
CONSTRUCTION/D&D - Architecture/Engineering Contracto	0.0	0.0	0.0	0.0	0.0	0.0	0.0	0.0	0.0
CONSTRUCTION/D&D - Construction Contractor	0.0	0.0	0.0	0.0	0.0	0.0	0.0	0.0	0.0
OPERATIONS - Site Management/Operations	0.0	0.0	0.0	0.0	0.0	0.0	0.0	0.0	0.0
OPERATIONS - Site Infrastructure	0.0	0.0	0.0	0.0	0.0	0.0	0.0	0.0	0.0
OPERATIONS - National Laboratories	0.0	0.0	0.0	0.0	0.0	0.0	0.0	0.0	0.0
OPERATIONS - Site Constructors	0.0	0.0	0.0	0.0	0.0	0.0	0.0	0.0	0.0
OPERATIONS - Architecture/Engineering Contractors	0.0	0.0	0.0	0.0	0.0	0.0	0.0	0.0	0.0
OPERATIONS - Construction Contractor	0.0	0.0	0.0	0.0	0.0	0.0	0.0	0.0	0.0
Worker Category Reddick FTE (FTE)									
Engineer/Management	0.0	0.0	0.0	0.0	0.0	0.0	0.0	0.0	0.0
Crafts	0.0	0.0	0.0	0.0	0.0	0.0	0.0	0.0	0.0
Maintenance	0.0	0.0	0.0	0.0	0.0	0.0	0.0	0.0	0.0
Operators	0.0	0.0	0.0	0.0	0.0	0.0	0.0	0.0	0.0
Infrastructure	0.0	0.0	0.0	0.0	0.0	0.0	0.0	0.0	0.0
Total	0.0	0.0	0.0	0.0	0.0	0.0	0.0	0.0	0.0

ALTERNATIVE 3 LLWV COST SUMMARY	FY13	FY14	FY15	FY16	FY17	FY18	FY19	FY20	FY21
Studies/Permitting	0	0	0	0	0	0	0	0	0
Design	0	0	0	0	0	0	0	0	0
Construction/D&D	0	0	0	0	0	0	0	0	0
Operation	10,369,700	4,103,000	117,700	96,800	33,000	0	0	0	0
Total	10,369,700	4,103,000	117,700	96,800	33,000	0	0	0	0

ALTERNATIVE 3 LLWV FTE SUMMARY	FY13	FY14	FY15	FY16	FY17	FY18	FY19	FY20	FY21
Engineer/Management	9.7	3.8	0.1	0.1	0.0	0.0	0.0	0.0	0.0
Crafts	0.0	0.0	0.0	0.0	0.0	0.0	0.0	0.0	0.0
Maintenance	14.6	5.8	0.2	0.1	0.0	0.0	0.0	0.0	0.0
Operators	24.3	9.6	0.3	0.2	0.1	0.0	0.0	0.0	0.0
Infrastructure	6.1	2.4	0.1	0.1	0.0	0.0	0.0	0.0	0.0
Total	54.6	21.6	0.6	0.5	0.2	0.0	0.0	0.0	0.0

ALTERNATIVE 3 LLWV REDDICK COST BREAKDOWN	FY22	FY23	FY24	FY25	FY26	FY27	FY28	FY29	FY30	FY31	FY32
Activity % of Alt 3 LLWV Reddick Costs (%)											
Studies/Permitting	0	0	0	0	0	0	0	0	0	0	0
Design	0	0	0	0	0	0	0	0	0	0	0
Construction/D&D	0	0	0	0	0	0	0	0	0	0	0
Operation	0	0	0	0	0	0	0	0	0	0	0
Total Percentage	0	0	0	0	0	0	0	0	0	0	0
Alt 3 LLWV Reddick Costs($)											
Studies/Permitting	0	0	0	0	0	0	0	0	0	0	0
Design	0	0	0	0	0	0	0	0	0	0	0
Construction/D&D	0	0	0	0	0	0	0	0	0	0	0
Operation	0	0	0	0	0	0	0	0	0	0	0
Total Cost	0	0	0	0	0	0	0	0	0	0	0

ALTERNATIVE 3 LLWV REDDICK FTE BREAKDOWN	FY22	FY23	FY24	FY25	FY26	FY27	FY28	FY29	FY30	FY31	FY32
Contractor FTE per Alt 3 LLWV Activity (FTE)											
STUDIES/PERMITTING - Site Management/Operations	0.0	0.0	0.0	0.0	0.0	0.0	0.0	0.0	0.0	0.0	0.0
STUDIES/PERMITTING - Site Infrastructure	0.0	0.0	0.0	0.0	0.0	0.0	0.0	0.0	0.0	0.0	0.0
STUDIES/PERMITTING - National Laboratories	0.0	0.0	0.0	0.0	0.0	0.0	0.0	0.0	0.0	0.0	0.0
STUDIES/PERMITTING - Site Constructors	0.0	0.0	0.0	0.0	0.0	0.0	0.0	0.0	0.0	0.0	0.0
STUDIES/PERMITTING - Architecture/Engineering Contract	0.0	0.0	0.0	0.0	0.0	0.0	0.0	0.0	0.0	0.0	0.0
STUDIES/PERMITTING - Construction Contractor	0.0	0.0	0.0	0.0	0.0	0.0	0.0	0.0	0.0	0.0	0.0
DESIGN - Site Management/Operations	0.0	0.0	0.0	0.0	0.0	0.0	0.0	0.0	0.0	0.0	0.0
DESIGN - Site Infrastructure	0.0	0.0	0.0	0.0	0.0	0.0	0.0	0.0	0.0	0.0	0.0
DESIGN - National Laboratories	0.0	0.0	0.0	0.0	0.0	0.0	0.0	0.0	0.0	0.0	0.0
DESIGN - Site Constructors	0.0	0.0	0.0	0.0	0.0	0.0	0.0	0.0	0.0	0.0	0.0
DESIGN - Architecture/Engineering Contractors	0.0	0.0	0.0	0.0	0.0	0.0	0.0	0.0	0.0	0.0	0.0
DESIGN - Construction Contractor	0.0	0.0	0.0	0.0	0.0	0.0	0.0	0.0	0.0	0.0	0.0
CONSTRUCTION/D&D - Site Management/Operations	0.0	0.0	0.0	0.0	0.0	0.0	0.0	0.0	0.0	0.0	0.0
CONSTRUCTION/D&D - Site Infrastructure	0.0	0.0	0.0	0.0	0.0	0.0	0.0	0.0	0.0	0.0	0.0
CONSTRUCTION/D&D - National Laboratories	0.0	0.0	0.0	0.0	0.0	0.0	0.0	0.0	0.0	0.0	0.0
CONSTRUCTION/D&D - Site Constructors	0.0	0.0	0.0	0.0	0.0	0.0	0.0	0.0	0.0	0.0	0.0
CONSTRUCTION/D&D - Architecture/Engineering Contracto	0.0	0.0	0.0	0.0	0.0	0.0	0.0	0.0	0.0	0.0	0.0
CONSTRUCTION/D&D - Construction Contractor	0.0	0.0	0.0	0.0	0.0	0.0	0.0	0.0	0.0	0.0	0.0
OPERATIONS - Site Management/Operations	0.0	0.0	0.0	0.0	0.0	0.0	0.0	0.0	0.0	0.0	0.0
OPERATIONS - Site Infrastructure	0.0	0.0	0.0	0.0	0.0	0.0	0.0	0.0	0.0	0.0	0.0
OPERATIONS - National Laboratories	0.0	0.0	0.0	0.0	0.0	0.0	0.0	0.0	0.0	0.0	0.0
OPERATIONS - Site Constructors	0.0	0.0	0.0	0.0	0.0	0.0	0.0	0.0	0.0	0.0	0.0
OPERATIONS - Architecture/Engineering Contractors	0.0	0.0	0.0	0.0	0.0	0.0	0.0	0.0	0.0	0.0	0.0
OPERATIONS - Construction Contractor	0.0	0.0	0.0	0.0	0.0	0.0	0.0	0.0	0.0	0.0	0.0
Worker Category Reddick FTE (FTE)											
Engineer/Management	0.0	0.0	0.0	0.0	0.0	0.0	0.0	0.0	0.0	0.0	0.0
Crafts	0.0	0.0	0.0	0.0	0.0	0.0	0.0	0.0	0.0	0.0	0.0
Maintenance	0.0	0.0	0.0	0.0	0.0	0.0	0.0	0.0	0.0	0.0	0.0
Operators	0.0	0.0	0.0	0.0	0.0	0.0	0.0	0.0	0.0	0.0	0.0
Infrastructure	0.0	0.0	0.0	0.0	0.0	0.0	0.0	0.0	0.0	0.0	0.0
Total	0.0	0.0	0.0	0.0	0.0	0.0	0.0	0.0	0.0	0.0	0.0

ALTERNATIVE 3 LLWV COST SUMMARY	FY22	FY23	FY24	FY25	FY26	FY27	FY28	FY29	FY30	FY31	FY32
Studies/Permitting	0	0	0	0	0	0	0	0	0	0	0
Design	0	0	0	0	0	0	0	0	0	0	0
Construction/D&D	0	0	0	0	0	0	0	0	0	0	0
Operation	0	0	0	0	0	0	0	0	0	0	0
Total	0	0	0	0	0	0	0	0	0	0	0

ALTERNATIVE 3 LLWV FTE SUMMARY	FY22	FY23	FY24	FY25	FY26	FY27	FY28	FY29	FY30	FY31	FY32
Engineer/Management	0.0	0.0	0.0	0.0	0.0	0.0	0.0	0.0	0.0	0.0	0.0
Crafts	0.0	0.0	0.0	0.0	0.0	0.0	0.0	0.0	0.0	0.0	0.0
Maintenance	0.0	0.0	0.0	0.0	0.0	0.0	0.0	0.0	0.0	0.0	0.0
Operators	0.0	0.0	0.0	0.0	0.0	0.0	0.0	0.0	0.0	0.0	0.0
Infrastructure	0.0	0.0	0.0	0.0	0.0	0.0	0.0	0.0	0.0	0.0	0.0
Total	0.0	0.0	0.0	0.0	0.0	0.0	0.0	0.0	0.0	0.0	0.0

ALTERNATIVE 3 LLWV REDDICK COST BREAKDOWN	FY33	FY34	FY35	FY36	FY37	FY38	FY39	FY40	
Activity % of Alt 3 LLWV Reddick Costs (%)									
Studies/Permitting	0	0	0	0	0	0	0	0	
Design	0	0	0	0	0	0	0	0	
Construction/D&D	0	0	0	0	0	0	0	0	
Operation	0	0	0	0	0	0	0	0	
Total Percentage	0	0	0	0	0	0	0	0	
Alt 3 LLWV Reddick Costs($)									**Totals**
Studies/Permitting	0	0	0	0	0	0	0	0	2,310,000
Design	0	0	0	0	0	0	0	0	10,890,000
Construction/D&D	0	0	0	0	0	0	0	0	24,200,000
Operation	0	0	0	0	0	0	0	0	16,500,000
Total Cost	0	0	0	0	0	0	0	0	53,900,000

ALTERNATIVE 3 LLWV REDDICK FTE BREAKDOWN	FY33	FY34	FY35	FY36	FY37	FY38	FY39	FY40	Totals
Contractor FTE per Alt 3 LLWV Activity (FTE)									
STUDIES/PERMITTING - Site Management/Operations	0.0	0.0	0.0	0.0	0.0	0.0	0.0	0.0	13.3
STUDIES/PERMITTING - Site Infrastructure	0.0	0.0	0.0	0.0	0.0	0.0	0.0	0.0	2.4
STUDIES/PERMITTING - National Laboratories	0.0	0.0	0.0	0.0	0.0	0.0	0.0	0.0	0.6
STUDIES/PERMITTING - Site Constructors	0.0	0.0	0.0	0.0	0.0	0.0	0.0	0.0	0.0
STUDIES/PERMITTING - Architecture/Engineering Contract	0.0	0.0	0.0	0.0	0.0	0.0	0.0	0.0	0.0
STUDIES/PERMITTING - Construction Contractor	0.0	0.0	0.0	0.0	0.0	0.0	0.0	0.0	0.0
DESIGN - Site Management/Operations	0.0	0.0	0.0	0.0	0.0	0.0	0.0	0.0	6.6
DESIGN - Site Infrastructure	0.0	0.0	0.0	0.0	0.0	0.0	0.0	0.0	1.2
DESIGN - National Laboratories	0.0	0.0	0.0	0.0	0.0	0.0	0.0	0.0	5.8
DESIGN - Site Constructors	0.0	0.0	0.0	0.0	0.0	0.0	0.0	0.0	3.9
DESIGN - Architecture/Engineering Contractors	0.0	0.0	0.0	0.0	0.0	0.0	0.0	0.0	45.4
DESIGN - Construction Contractor	0.0	0.0	0.0	0.0	0.0	0.0	0.0	0.0	0.0
CONSTRUCTION/D&D - Site Management/Operations	0.0	0.0	0.0	0.0	0.0	0.0	0.0	0.0	14.7
CONSTRUCTION/D&D - Site Infrastructure	0.0	0.0	0.0	0.0	0.0	0.0	0.0	0.0	2.6
CONSTRUCTION/D&D - National Laboratories	0.0	0.0	0.0	0.0	0.0	0.0	0.0	0.0	0.0
CONSTRUCTION/D&D - Site Constructors	0.0	0.0	0.0	0.0	0.0	0.0	0.0	0.0	8.6
CONSTRUCTION/D&D - Architecture/Engineering Contracto	0.0	0.0	0.0	0.0	0.0	0.0	0.0	0.0	6.7
CONSTRUCTION/D&D - Construction Contractor	0.0	0.0	0.0	0.0	0.0	0.0	0.0	0.0	142.4
OPERATIONS - Site Management/Operations	0.0	0.0	0.0	0.0	0.0	0.0	0.0	0.0	70.1
OPERATIONS - Site Infrastructure	0.0	0.0	0.0	0.0	0.0	0.0	0.0	0.0	12.4
OPERATIONS - National Laboratories	0.0	0.0	0.0	0.0	0.0	0.0	0.0	0.0	8.9
OPERATIONS - Site Constructors	0.0	0.0	0.0	0.0	0.0	0.0	0.0	0.0	0.0
OPERATIONS - Architecture/Engineering Contractors	0.0	0.0	0.0	0.0	0.0	0.0	0.0	0.0	0.0
OPERATIONS - Construction Contractor	0.0	0.0	0.0	0.0	0.0	0.0	0.0	0.0	0.0
Worker Category Reddick FTE (FTE)									
Engineer/Management	0.0	0.0	0.0	0.0	0.0	0.0	0.0	0.0	148.3
Crafts	0.0	0.0	0.0	0.0	0.0	0.0	0.0	0.0	115.6
Maintenance	0.0	0.0	0.0	0.0	0.0	0.0	0.0	0.0	23.7
Operators	0.0	0.0	0.0	0.0	0.0	0.0	0.0	0.0	39.5
Infrastructure	0.0	0.0	0.0	0.0	0.0	0.0	0.0	0.0	18.5
Total	0.0	0.0	0.0	0.0	0.0	0.0	0.0	0.0	345.5

ALTERNATIVE 3 LLWV COST SUMMARY	FY33	FY34	FY35	FY36	FY37	FY38	FY39	FY40	Totals
Studies/Permitting	0	0	0	0	0	0	0	0	48,191,605
Design	0	0	0	0	0	0	0	0	10,890,000
Construction/D&D	0	0	0	0	0	0	0	0	34,686,025
Operation	0	0	0	0	0	0	0	0	382,158,370
Total	0	0	0	0	0	0	0	0	475,926,000

ALTERNATIVE 3 LLWV FTE SUMMARY	FY33	FY34	FY35	FY36	FY37	FY38	FY39	FY40	Totals
Engineer/Management	0.0	0.0	0.0	0.0	0.0	0.0	0.0	0.0	785.3
Crafts	0.0	0.0	0.0	0.0	0.0	0.0	0.0	0.0	165.7
Maintenance	0.0	0.0	0.0	0.0	0.0	0.0	0.0	0.0	537.2
Operators	0.0	0.0	0.0	0.0	0.0	0.0	0.0	0.0	895.3
Infrastructure	0.0	0.0	0.0	0.0	0.0	0.0	0.0	0.0	271.4
Total	0.0	0.0	0.0	0.0	0.0	0.0	0.0	0.0	2,654.8

FUNCTION - ALTERNATIVE 3 HLWV	FY95	FY96	FY97	FY98	FY99	FY00
Technology Development (Test) Cost	13,582,327	17,101,894	15,321,558	1,124,209	0	0
Perform HLW Hot Operations First Year (Hot Test)	0	0	0	0	0	0
Perform HLW Cold Operations	0	0	0	0	0	0
Subtotal Test Costs	13,582,327	17,101,894	15,321,558	1,124,209	0	0
Test Oversight Costs	0	0	0	0	0	0
Total HLWV Base Costs	**13,582,327**	**17,101,894**	**15,321,558**	**1,124,209**	**0**	**0**
Total Alt 3 Reddick Costs	3,000,000	6,000,000	12,000,000	19,000,000	40,000,000	40,000,000
LLWV % of Total Alt 3 Reddick Costs	*33*	*33*	*33*	*33*	*33*	*33*
Alt 3 LLWV Reddick Costs	**990,000**	**1,980,000**	**3,960,000**	**6,270,000**	**13,200,000**	**13,200,000**
Alternative 3 HLWV Actual Costs ($)	**14,572,327**	**19,081,894**	**19,281,558**	**7,394,209**	**13,200,000**	**13,200,000**

ALTERNATIVE 3 HLWV BASE COST BREAKDOWN	FY95	FY96	FY97	FY98	FY99	FY00
Activity % of Alternative 3 HLWV Base Costs (%)						
Studies/Permitting	45	45	40	25	0	0
Design	5	5	0	0	0	0
Construction/D&D	10	10	10	5	0	0
Operation	40	40	50	70	0	0
Total Percentage	**100**	**100**	**100**	**100**	**0**	**0**
Alternative 3 HLWV Base Costs($)						
Studies/Permitting	6,112,047	7,695,852	6,128,623	281,052	0	0
Design	679,116	855,095	0	0	0	0
Construction/D&D	1,358,233	1,710,189	1,532,156	56,210	0	0
Operation	5,432,931	6,840,758	7,660,779	786,946	0	0
Total Cost	**13,582,327**	**17,101,894**	**15,321,558**	**1,124,209**	**0**	**0**

ALTERNATIVE 3 HLWV BASE FTE BREAKDOWN	FY95	FY96	FY97	FY98	FY99	FY00
Contractor FTE per Alternative 3 HLWV Activity (FTE)						
STUDIES/PERMITTING - Site Management/Operations	27.8	35.0	27.9	1.3	0.0	0.0
STUDIES/PERMITTING - Site Infrastructure	4.9	6.2	4.9	0.2	0.0	0.0
STUDIES/PERMITTING - National Laboratories	8.2	10.3	8.2	0.4	0.0	0.0
STUDIES/PERMITTING - Site Constructors	0.0	0.0	0.0	0.0	0.0	0.0
STUDIES/PERMITTING - Architecture/Engineering Contract	0.0	0.0	0.0	0.0	0.0	0.0
STUDIES/PERMITTING - Construction Contractor	0.0	0.0	0.0	0.0	0.0	0.0
DESIGN - Site Management/Operations	0.4	0.5	0.0	0.0	0.0	0.0
DESIGN - Site Infrastructure	0.1	0.1	0.0	0.0	0.0	0.0
DESIGN - National Laboratories	0.4	0.5	0.0	0.0	0.0	0.0
DESIGN - Site Constructors	0.2	0.3	0.0	0.0	0.0	0.0
DESIGN - Architecture/Engineering Contractors	2.8	3.6	0.0	0.0	0.0	0.0
DESIGN - Construction Contractor	0.0	0.0	0.0	0.0	0.0	0.0
CONSTRUCTION/D&D - Site Management/Operations	0.4	0.5	0.5	0.0	0.0	0.0
CONSTRUCTION/D&D - Site Infrastructure	0.1	0.1	0.1	0.0	0.0	0.0
CONSTRUCTION/D&D - National Laboratories	0.4	0.5	0.4	0.0	0.0	0.0
CONSTRUCTION/D&D - Site Constructors	0.5	0.6	0.5	0.0	0.0	0.0
CONSTRUCTION/D&D - Architecture/Engineering Contracto	0.4	0.5	0.4	0.0	0.0	0.0
CONSTRUCTION/D&D - Construction Contractor	8.0	10.1	9.0	0.3	0.0	0.0
OPERATIONS - Site Management/Operations	18.1	22.8	25.6	2.6	0.0	0.0
OPERATIONS - Site Infrastructure	3.2	4.0	4.5	0.5	0.0	0.0
OPERATIONS - National Laboratories	7.3	9.2	10.3	1.1	0.0	0.0
OPERATIONS - Site Constructors	0.0	0.0	0.0	0.0	0.0	0.0
OPERATIONS - Architecture/Engineering Contractors	0.0	0.0	0.0	0.0	0.0	0.0
OPERATIONS - Construction Contractor	0.0	0.0	0.0	0.0	0.0	0.0

Worker Category Base FTE (FTE)	FY95	FY96	FY97	FY98	FY99	FY00
Engineer/Management	48.1	60.6	46.8	2.5	0.0	0.0
Crafts	6.5	8.2	7.3	0.3	0.0	0.0
Maintenance	7.6	9.6	10.8	1.1	0.0	0.0
Operators	12.7	16.0	17.9	1.8	0.0	0.0
Infrastructure	8.3	10.4	9.5	0.7	0.0	0.0
Total	**83.2**	**104.8**	**92.4**	**6.4**	**0.0**	**0.0**

FUNCTION - ALTERNATIVE 3 HLWV	FY01	FY02	FY03	FY04	FY05	FY06
Technology Development (Test) Cost	0	0	0	0	0	0
Perform HLW Hot Operations First Year (Hot Test)	0	0	0	0	0	0
Perform HLW Cold Operations	0	0	0	857,272	16,282,120	36,334,800
Subtotal Test Costs	0	0	0	857,272	16,282,120	36,334,800
Test Oversight Costs	0	0	0	0	0	0
Total HLWV Base Costs	**0**	**0**	**0**	**857,272**	**16,282,120**	**36,334,800**
Total Alt 3 Reddick Costs	68,000,000	67,000,000	85,000,000	30,000,000	30,000,000	30,000,000
LLWV % of Total Alt 3 Reddick Costs	*33*	*77*	*77*	*77*	*77*	*77*
Alt 3 LLWV Reddick Costs	**22,440,000**	**51,590,000**	**65,450,000**	**23,100,000**	**23,100,000**	**23,100,000**
Alternative 3 HLWV Actual Costs ($)	**22,440,000**	**51,590,000**	**65,450,000**	**23,957,272**	**39,382,120**	**59,434,800**

ALTERNATIVE 3 HLWV BASE COST BREAKDOWN	FY01	FY02	FY03	FY04	FY05	FY06
Activity % of Alternative 3 HLWV Base Costs (%)						
Studies/Permitting	0	0	0	0	0	0
Design	0	0	0	0	0	0
Construction/D&D	0	0	0	0	0	0
Operation	0	0	0	100	100	100
Total Percentage	**0**	**0**	**0**	**100**	**100**	**100**
Alternative 3 HLWV Base Costs($)						
Studies/Permitting	0	0	0	0	0	0
Design	0	0	0	0	0	0
Construction/D&D	0	0	0	0	0	0
Operation	0	0	0	857,272	16,282,120	36,334,800
Total Cost	**0**	**0**	**0**	**857,272**	**16,282,120**	**36,334,800**

ALTERNATIVE 3 HLWV BASE FTE BREAKDOWN	FY01	FY02	FY03	FY04	FY05	FY06
Contractor FTE per Alternative 3 HLWV Activity (FTE)						
STUDIES/PERMITTING - Site Management/Operations	0.0	0.0	0.0	0.0	0.0	0.0
STUDIES/PERMITTING - Site Infrastructure	0.0	0.0	0.0	0.0	0.0	0.0
STUDIES/PERMITTING - National Laboratories	0.0	0.0	0.0	0.0	0.0	0.0
STUDIES/PERMITTING - Site Constructors	0.0	0.0	0.0	0.0	0.0	0.0
STUDIES/PERMITTING - Architecture/Engineering Contract	0.0	0.0	0.0	0.0	0.0	0.0
STUDIES/PERMITTING - Construction Contractor	0.0	0.0	0.0	0.0	0.0	0.0
DESIGN - Site Management/Operations	0.0	0.0	0.0	0.0	0.0	0.0
DESIGN - Site Infrastructure	0.0	0.0	0.0	0.0	0.0	0.0
DESIGN - National Laboratories	0.0	0.0	0.0	0.0	0.0	0.0
DESIGN - Site Constructors	0.0	0.0	0.0	0.0	0.0	0.0
DESIGN - Architecture/Engineering Contractors	0.0	0.0	0.0	0.0	0.0	0.0
DESIGN - Construction Contractor	0.0	0.0	0.0	0.0	0.0	0.0
CONSTRUCTION/D&D - Site Management/Operations	0.0	0.0	0.0	0.0	0.0	0.0
CONSTRUCTION/D&D - Site Infrastructure	0.0	0.0	0.0	0.0	0.0	0.0
CONSTRUCTION/D&D - National Laboratories	0.0	0.0	0.0	0.0	0.0	0.0
CONSTRUCTION/D&D - Site Constructors	0.0	0.0	0.0	0.0	0.0	0.0
CONSTRUCTION/D&D - Architecture/Engineering Contracto	0.0	0.0	0.0	0.0	0.0	0.0
CONSTRUCTION/D&D - Construction Contractor	0.0	0.0	0.0	0.0	0.0	0.0
OPERATIONS - Site Management/Operations	0.0	0.0	0.0	2.9	54.4	121.3
OPERATIONS - Site Infrastructure	0.0	0.0	0.0	0.5	9.6	21.4
OPERATIONS - National Laboratories	0.0	0.0	0.0	1.2	21.8	48.7
OPERATIONS - Site Constructors	0.0	0.0	0.0	0.0	0.0	0.0
OPERATIONS - Architecture/Engineering Contractors	0.0	0.0	0.0	0.0	0.0	0.0
OPERATIONS - Construction Contractor	0.0	0.0	0.0	0.0	0.0	0.0

Worker Category Base FTE (FTE)	FY01	FY02	FY03	FY04	FY05	FY06
Engineer/Management	0.0	0.0	0.0	0.8	15.2	34.0
Crafts	0.0	0.0	0.0	0.0	0.0	0.0
Maintenance	0.0	0.0	0.0	1.2	22.9	51.0
Operators	0.0	0.0	0.0	2.0	38.1	85.0
Infrastructure	0.0	0.0	0.0	0.5	9.6	21.4
Total	**0.0**	**0.0**	**0.0**	**4.5**	**85.8**	**191.5**

FUNCTION - ALTERNATIVE 3 HLWV	FY07	FY08	FY09	FY10	FY11	FY12
Technology Development (Test) Cost	0	0	0	0	0	0
Perform HLW Hot Operations First Year (Hot Test)	0	0	0	219,742,768	0	0
Perform HLW Cold Operations	58,298,612	78,584,160	6,753,131	0	0	0
Subtotal Test Costs	58,298,612	78,584,160	6,753,131	219,742,768	0	0
Test Oversight Costs	0	0	0	0	0	0
Total HLWV Base Costs	**58,298,612**	**78,584,160**	**6,753,131**	**219,742,768**	**0**	**0**
Total Alt 3 Reddick Costs	30,000,000	30,000,000	0	0		
LLWV % of Total Alt 3 Reddick Costs	*77*	*77*	*0*	*0*		
Alt 3 LLWV Reddick Costs	**23,100,000**	**23,100,000**	**0**	**0**	**0**	**0**
Alternative 3 HLWV Actual Costs ($)	**81,398,612**	**101,684,160**	**6,753,131**	**219,742,768**	**0**	**0**

ALTERNATIVE 3 HLWV BASE COST BREAKDOWN	FY07	FY08	FY09	FY10	FY11	FY12
Activity % of Alternative 3 HLWV Base Costs (%)						
Studies/Permitting	0	0	0	0	0	0
Design	0	0	0	0	0	0
Construction/D&D	0	0	0	0	0	0
Operation	100	100	100	100	0	0
Total Percentage	**100**	**100**	**100**	**100**	**0**	**0**
Alternative 3 HLWV Base Costs($)						
Studies/Permitting	0	0	0	0	0	0
Design	0	0	0	0	0	0
Construction/D&D	0	0	0	0	0	0
Operation	58,298,612	78,584,160	6,753,131	219,742,768	0	0
Total Cost	**58,298,612**	**78,584,160**	**6,753,131**	**219,742,768**	**0**	**0**

ALTERNATIVE 3 HLWV BASE FTE BREAKDOWN	FY07	FY08	FY09	FY10	FY11	FY12
Contractor FTE per Alternative 3 HLWV Activity (FTE)						
STUDIES/PERMITTING - Site Management/Operations	0.0	0.0	0.0	0.0	0.0	0.0
STUDIES/PERMITTING - Site Infrastructure	0.0	0.0	0.0	0.0	0.0	0.0
STUDIES/PERMITTING - National Laboratories	0.0	0.0	0.0	0.0	0.0	0.0
STUDIES/PERMITTING - Site Constructors	0.0	0.0	0.0	0.0	0.0	0.0
STUDIES/PERMITTING - Architecture/Engineering Contract	0.0	0.0	0.0	0.0	0.0	0.0
STUDIES/PERMITTING - Construction Contractor	0.0	0.0	0.0	0.0	0.0	0.0
DESIGN - Site Management/Operations	0.0	0.0	0.0	0.0	0.0	0.0
DESIGN - Site Infrastructure	0.0	0.0	0.0	0.0	0.0	0.0
DESIGN - National Laboratories	0.0	0.0	0.0	0.0	0.0	0.0
DESIGN - Site Constructors	0.0	0.0	0.0	0.0	0.0	0.0
DESIGN - Architecture/Engineering Contractors	0.0	0.0	0.0	0.0	0.0	0.0
DESIGN - Construction Contractor	0.0	0.0	0.0	0.0	0.0	0.0
CONSTRUCTION/D&D - Site Management/Operations	0.0	0.0	0.0	0.0	0.0	0.0
CONSTRUCTION/D&D - Site Infrastructure	0.0	0.0	0.0	0.0	0.0	0.0
CONSTRUCTION/D&D - National Laboratories	0.0	0.0	0.0	0.0	0.0	0.0
CONSTRUCTION/D&D - Site Constructors	0.0	0.0	0.0	0.0	0.0	0.0
CONSTRUCTION/D&D - Architecture/Engineering Contracto	0.0	0.0	0.0	0.0	0.0	0.0
CONSTRUCTION/D&D - Construction Contractor	0.0	0.0	0.0	0.0	0.0	0.0
OPERATIONS - Site Management/Operations	194.7	262.4	22.6	733.8	0.0	0.0
OPERATIONS - Site Infrastructure	34.4	46.3	4.0	129.5	0.0	0.0
OPERATIONS - National Laboratories	78.2	105.4	9.1	294.8	0.0	0.0
OPERATIONS - Site Constructors	0.0	0.0	0.0	0.0	0.0	0.0
OPERATIONS - Architecture/Engineering Contractors	0.0	0.0	0.0	0.0	0.0	0.0
OPERATIONS - Construction Contractor	0.0	0.0	0.0	0.0	0.0	0.0

Worker Category Base FTE (FTE)	FY07	FY08	FY09	FY10	FY11	FY12
Engineer/Management	54.6	73.6	6.3	205.7	0.0	0.0
Crafts	0.0	0.0	0.0	0.0	0.0	0.0
Maintenance	81.9	110.4	9.5	308.6	0.0	0.0
Operators	136.4	183.9	15.8	514.3	0.0	0.0
Infrastructure	34.4	46.3	4.0	129.5	0.0	0.0
Total	**307.2**	**414.1**	**35.6**	**1,158.1**	**0.0**	**0.0**

FUNCTION - ALTERNATIVE 3 HLWV	FY13	FY14	FY15	FY16	FY17	FY18	FY19	FY20	FY21
Technology Development (Test) Cost	0	0	0	0	0	0	0	0	0
Perform HLW Hot Operations First Year (Hot Test)	0	0	0	0	0	0	0	0	0
Perform HLW Cold Operations	0	0	0	0	0	0	0	0	0
Subtotal Test Costs	0	0	0	0	0	0	0	0	0
Test Oversight Costs	0	0	0	0	0	0	0	0	0
Total HLWV Base Costs	0	0	0	0	0	0	0	0	0
Total Alt 3 Reddick Costs									
LLWV % of Total Alt 3 Reddick Costs									
Alt 3 LLWV Reddick Costs	0	0	0	0	0	0	0	0	0
Alternative 3 HLWV Actual Costs ($)	0	0	0	0	0	0	0	0	0

ALTERNATIVE 3 HLWV BASE COST BREAKDOWN	FY13	FY14	FY15	FY16	FY17	FY18	FY19	FY20	FY21
Activity % of Alternative 3 HLWV Base Costs (%)									
Studies/Permitting	0	0	0	0	0	0	0	0	0
Design	0	0	0	0	0	0	0	0	0
Construction/D&D	0	0	0	0	0	0	0	0	0
Operation	0	0	0	0	0	0	0	0	0
Total Percentage	0	0	0	0	0	0	0	0	0
Alternative 3 HLWV Base Costs($)									
Studies/Permitting	0	0	0	0	0	0	0	0	0
Design	0	0	0	0	0	0	0	0	0
Construction/D&D	0	0	0	0	0	0	0	0	0
Operation	0	0	0	0	0	0	0	0	0
Total Cost	0	0	0	0	0	0	0	0	0

ALTERNATIVE 3 HLWV BASE FTE BREAKDOWN	FY13	FY14	FY15	FY16	FY17	FY18	FY19	FY20	FY21
Contractor FTE per Alternative 3 HLWV Activity (FTE)									
STUDIES/PERMITTING - Site Management/Operations	0.0	0.0	0.0	0.0	0.0	0.0	0.0	0.0	0.0
STUDIES/PERMITTING - Site Infrastructure	0.0	0.0	0.0	0.0	0.0	0.0	0.0	0.0	0.0
STUDIES/PERMITTING - National Laboratories	0.0	0.0	0.0	0.0	0.0	0.0	0.0	0.0	0.0
STUDIES/PERMITTING - Site Constructors	0.0	0.0	0.0	0.0	0.0	0.0	0.0	0.0	0.0
STUDIES/PERMITTING - Architecture/Engineering Contract	0.0	0.0	0.0	0.0	0.0	0.0	0.0	0.0	0.0
STUDIES/PERMITTING - Construction Contractor	0.0	0.0	0.0	0.0	0.0	0.0	0.0	0.0	0.0
DESIGN - Site Management/Operations	0.0	0.0	0.0	0.0	0.0	0.0	0.0	0.0	0.0
DESIGN - Site Infrastructure	0.0	0.0	0.0	0.0	0.0	0.0	0.0	0.0	0.0
DESIGN - National Laboratories	0.0	0.0	0.0	0.0	0.0	0.0	0.0	0.0	0.0
DESIGN - Site Constructors	0.0	0.0	0.0	0.0	0.0	0.0	0.0	0.0	0.0
DESIGN - Architecture/Engineering Contractors	0.0	0.0	0.0	0.0	0.0	0.0	0.0	0.0	0.0
DESIGN - Construction Contractor	0.0	0.0	0.0	0.0	0.0	0.0	0.0	0.0	0.0
CONSTRUCTION/D&D - Site Management/Operations	0.0	0.0	0.0	0.0	0.0	0.0	0.0	0.0	0.0
CONSTRUCTION/D&D - Site Infrastructure	0.0	0.0	0.0	0.0	0.0	0.0	0.0	0.0	0.0
CONSTRUCTION/D&D - National Laboratories	0.0	0.0	0.0	0.0	0.0	0.0	0.0	0.0	0.0
CONSTRUCTION/D&D - Site Constructors	0.0	0.0	0.0	0.0	0.0	0.0	0.0	0.0	0.0
CONSTRUCTION/D&D - Architecture/Engineering Contracto	0.0	0.0	0.0	0.0	0.0	0.0	0.0	0.0	0.0
CONSTRUCTION/D&D - Construction Contractor	0.0	0.0	0.0	0.0	0.0	0.0	0.0	0.0	0.0
OPERATIONS - Site Management/Operations	0.0	0.0	0.0	0.0	0.0	0.0	0.0	0.0	0.0
OPERATIONS - Site Infrastructure	0.0	0.0	0.0	0.0	0.0	0.0	0.0	0.0	0.0
OPERATIONS - National Laboratories	0.0	0.0	0.0	0.0	0.0	0.0	0.0	0.0	0.0
OPERATIONS - Site Constructors	0.0	0.0	0.0	0.0	0.0	0.0	0.0	0.0	0.0
OPERATIONS - Architecture/Engineering Contractors	0.0	0.0	0.0	0.0	0.0	0.0	0.0	0.0	0.0
OPERATIONS - Construction Contractor	0.0	0.0	0.0	0.0	0.0	0.0	0.0	0.0	0.0

Worker Category Base FTE (FTE)	FY13	FY14	FY15	FY16	FY17	FY18	FY19	FY20	FY21
Engineer/Management	0.0	0.0	0.0	0.0	0.0	0.0	0.0	0.0	0.0
Crafts	0.0	0.0	0.0	0.0	0.0	0.0	0.0	0.0	0.0
Maintenance	0.0	0.0	0.0	0.0	0.0	0.0	0.0	0.0	0.0
Operators	0.0	0.0	0.0	0.0	0.0	0.0	0.0	0.0	0.0
Infrastructure	0.0	0.0	0.0	0.0	0.0	0.0	0.0	0.0	0.0
Total	0.0	0.0	0.0	0.0	0.0	0.0	0.0	0.0	0.0

FUNCTION - ALTERNATIVE 3 HLWV	FY22	FY23	FY24	FY25	FY26	FY27	FY28	FY29	FY30	FY31	FY32
Technology Development (Test) Cost	0	0	0	0	0	0	0	0	0	0	0
Perform HLW Hot Operations First Year (Hot Test)	0	0	0	0	0	0	0	0	0	0	0
Perform HLW Cold Operations	0	0	0	0	0	0	0	0	0	0	0
Subtotal Test Costs	0	0	0	0	0	0	0	0	0	0	0
Test Oversight Costs	0	0	0	0	0	0	0	0	0	0	0
Total HLWV Base Costs	0	0	0	0	0	0	0	0	0	0	0
Total Alt 3 Reddick Costs											
LLWV % of Total Alt 3 Reddick Costs											
Alt 3 LLWV Reddick Costs	0	0	0	0	0	0	0	0	0	0	0
Alternative 3 HLWV Actual Costs ($)	0	0	0	0	0	0	0	0	0	0	0

ALTERNATIVE 3 HLWV BASE COST BREAKDOWN	FY22	FY23	FY24	FY25	FY26	FY27	FY28	FY29	FY30	FY31	FY32
Activity % of Alternative 3 HLWV Base Costs (%)											
Studies/Permitting	0	0	0	0	0	0	0	0	0	0	0
Design	0	0	0	0	0	0	0	0	0	0	0
Construction/D&D	0	0	0	0	0	0	0	0	0	0	0
Operation	0	0	0	0	0	0	0	0	0	0	0
Total Percentage	0	0	0	0	0	0	0	0	0	0	0
Alternative 3 HLWV Base Costs($)											
Studies/Permitting	0	0	0	0	0	0	0	0	0	0	0
Design	0	0	0	0	0	0	0	0	0	0	0
Construction/D&D	0	0	0	0	0	0	0	0	0	0	0
Operation	0	0	0	0	0	0	0	0	0	0	0
Total Cost	0	0	0	0	0	0	0	0	0	0	0

ALTERNATIVE 3 HLWV BASE FTE BREAKDOWN	FY22	FY23	FY24	FY25	FY26	FY27	FY28	FY29	FY30	FY31	FY32
Contractor FTE per Alternative 3 HLWV Activity (FTE)											
STUDIES/PERMITTING - Site Management/Operations	0.0	0.0	0.0	0.0	0.0	0.0	0.0	0.0	0.0	0.0	0.0
STUDIES/PERMITTING - Site Infrastructure	0.0	0.0	0.0	0.0	0.0	0.0	0.0	0.0	0.0	0.0	0.0
STUDIES/PERMITTING - National Laboratories	0.0	0.0	0.0	0.0	0.0	0.0	0.0	0.0	0.0	0.0	0.0
STUDIES/PERMITTING - Site Constructors	0.0	0.0	0.0	0.0	0.0	0.0	0.0	0.0	0.0	0.0	0.0
STUDIES/PERMITTING - Architecture/Engineering Contract	0.0	0.0	0.0	0.0	0.0	0.0	0.0	0.0	0.0	0.0	0.0
STUDIES/PERMITTING - Construction Contractor	0.0	0.0	0.0	0.0	0.0	0.0	0.0	0.0	0.0	0.0	0.0
DESIGN - Site Management/Operations	0.0	0.0	0.0	0.0	0.0	0.0	0.0	0.0	0.0	0.0	0.0
DESIGN - Site Infrastructure	0.0	0.0	0.0	0.0	0.0	0.0	0.0	0.0	0.0	0.0	0.0
DESIGN - National Laboratories	0.0	0.0	0.0	0.0	0.0	0.0	0.0	0.0	0.0	0.0	0.0
DESIGN - Site Constructors	0.0	0.0	0.0	0.0	0.0	0.0	0.0	0.0	0.0	0.0	0.0
DESIGN - Architecture/Engineering Contractors	0.0	0.0	0.0	0.0	0.0	0.0	0.0	0.0	0.0	0.0	0.0
DESIGN - Construction Contractor	0.0	0.0	0.0	0.0	0.0	0.0	0.0	0.0	0.0	0.0	0.0
CONSTRUCTION/D&D - Site Management/Operations	0.0	0.0	0.0	0.0	0.0	0.0	0.0	0.0	0.0	0.0	0.0
CONSTRUCTION/D&D - Site Infrastructure	0.0	0.0	0.0	0.0	0.0	0.0	0.0	0.0	0.0	0.0	0.0
CONSTRUCTION/D&D - National Laboratories	0.0	0.0	0.0	0.0	0.0	0.0	0.0	0.0	0.0	0.0	0.0
CONSTRUCTION/D&D - Site Constructors	0.0	0.0	0.0	0.0	0.0	0.0	0.0	0.0	0.0	0.0	0.0
CONSTRUCTION/D&D - Architecture/Engineering Contracto	0.0	0.0	0.0	0.0	0.0	0.0	0.0	0.0	0.0	0.0	0.0
CONSTRUCTION/D&D - Construction Contractor	0.0	0.0	0.0	0.0	0.0	0.0	0.0	0.0	0.0	0.0	0.0
OPERATIONS - Site Management/Operations	0.0	0.0	0.0	0.0	0.0	0.0	0.0	0.0	0.0	0.0	0.0
OPERATIONS - Site Infrastructure	0.0	0.0	0.0	0.0	0.0	0.0	0.0	0.0	0.0	0.0	0.0
OPERATIONS - National Laboratories	0.0	0.0	0.0	0.0	0.0	0.0	0.0	0.0	0.0	0.0	0.0
OPERATIONS - Site Constructors	0.0	0.0	0.0	0.0	0.0	0.0	0.0	0.0	0.0	0.0	0.0
OPERATIONS - Architecture/Engineering Contractors	0.0	0.0	0.0	0.0	0.0	0.0	0.0	0.0	0.0	0.0	0.0
OPERATIONS - Construction Contractor	0.0	0.0	0.0	0.0	0.0	0.0	0.0	0.0	0.0	0.0	0.0

Worker Category Base FTE (FTE)	FY22	FY23	FY24	FY25	FY26	FY27	FY28	FY29	FY30	FY31	FY32
Engineer/Management	0.0	0.0	0.0	0.0	0.0	0.0	0.0	0.0	0.0	0.0	0.0
Crafts	0.0	0.0	0.0	0.0	0.0	0.0	0.0	0.0	0.0	0.0	0.0
Maintenance	0.0	0.0	0.0	0.0	0.0	0.0	0.0	0.0	0.0	0.0	0.0
Operators	0.0	0.0	0.0	0.0	0.0	0.0	0.0	0.0	0.0	0.0	0.0
Infrastructure	0.0	0.0	0.0	0.0	0.0	0.0	0.0	0.0	0.0	0.0	0.0
Total	0.0	0.0	0.0	0.0	0.0	0.0	0.0	0.0	0.0	0.0	0.0

FUNCTION - ALTERNATIVE 3 HLWV	FY33	FY34	FY35	FY36	FY37	FY38	FY39	FY40	Totals
Technology Development (Test) Cost	0	0	0	0	0	0	0	0	47,129,988
Perform HLW Hot Operations First Year (Hot Test)	0	0	0	0	0	0	0	0	219,742,768
Perform HLW Cold Operations	0	0	0	0	0	0	0	0	197,110,095
Subtotal Test Costs	0	0	0	0	0	0	0	0	463,982,851
Test Oversight Costs	0	0	0	0	0	0	0	0	0
Total HLWV Base Costs	0	0	0	0	0	0	0	0	463,982,851
Total Alt 3 Reddick Costs									490,000,000
LLWV % of Total Alt 3 Reddick Costs									770
Alt 3 LLWV Reddick Costs	0	0	0	0	0	0	0	0	294,580,000
Alternative 3 HLWV Actual Costs ($)	0	0	0	0	0	0	0	0	758,562,851

ALTERNATIVE 3 HLWV BASE COST BREAKDOWN	FY33	FY34	FY35	FY36	FY37	FY38	FY39	FY40	
Activity % of Alternative 3 HLWV Base Costs (%)									
Studies/Permitting	0	0	0	0	0	0	0	0	
Design	0	0	0	0	0	0	0	0	
Construction/D&D	0	0	0	0	0	0	0	0	
Operation	0	0	0	0	0	0	0	0	
Total Percentage	0	0	0	0	0	0	0	0	
Alternative 3 HLWV Base Costs($)									**Totals**
Studies/Permitting	0	0	0	0	0	0	0	0	20,217,575
Design	0	0	0	0	0	0	0	0	1,534,211
Construction/D&D	0	0	0	0	0	0	0	0	4,656,788
Operation	0	0	0	0	0	0	0	0	437,574,277
Total Cost	0	0	0	0	0	0	0	0	463,982,851

ALTERNATIVE 3 HLWV BASE FTE BREAKDOWN	FY33	FY34	FY35	FY36	FY37	FY38	FY39	FY40	Totals
Contractor FTE per Alternative 3 HLWV Activity (FTE)									
STUDIES/PERMITTING - Site Management/Operations	0.0	0.0	0.0	0.0	0.0	0.0	0.0	0.0	92.1
STUDIES/PERMITTING - Site Infrastructure	0.0	0.0	0.0	0.0	0.0	0.0	0.0	0.0	16.2
STUDIES/PERMITTING - National Laboratories	0.0	0.0	0.0	0.0	0.0	0.0	0.0	0.0	27.1
STUDIES/PERMITTING - Site Constructors	0.0	0.0	0.0	0.0	0.0	0.0	0.0	0.0	0.0
STUDIES/PERMITTING - Architecture/Engineering Contract	0.0	0.0	0.0	0.0	0.0	0.0	0.0	0.0	0.0
STUDIES/PERMITTING - Construction Contractor	0.0	0.0	0.0	0.0	0.0	0.0	0.0	0.0	0.0
DESIGN - Site Management/Operations	0.0	0.0	0.0	0.0	0.0	0.0	0.0	0.0	0.9
DESIGN - Site Infrastructure	0.0	0.0	0.0	0.0	0.0	0.0	0.0	0.0	0.2
DESIGN - National Laboratories	0.0	0.0	0.0	0.0	0.0	0.0	0.0	0.0	0.8
DESIGN - Site Constructors	0.0	0.0	0.0	0.0	0.0	0.0	0.0	0.0	0.5
DESIGN - Architecture/Engineering Contractors	0.0	0.0	0.0	0.0	0.0	0.0	0.0	0.0	6.4
DESIGN - Construction Contractor	0.0	0.0	0.0	0.0	0.0	0.0	0.0	0.0	0.0
CONSTRUCTION/D&D - Site Management/Operations	0.0	0.0	0.0	0.0	0.0	0.0	0.0	0.0	1.4
CONSTRUCTION/D&D - Site Infrastructure	0.0	0.0	0.0	0.0	0.0	0.0	0.0	0.0	0.2
CONSTRUCTION/D&D - National Laboratories	0.0	0.0	0.0	0.0	0.0	0.0	0.0	0.0	1.2
CONSTRUCTION/D&D - Site Constructors	0.0	0.0	0.0	0.0	0.0	0.0	0.0	0.0	1.7
CONSTRUCTION/D&D - Architecture/Engineering Contracto	0.0	0.0	0.0	0.0	0.0	0.0	0.0	0.0	1.3
CONSTRUCTION/D&D - Construction Contractor	0.0	0.0	0.0	0.0	0.0	0.0	0.0	0.0	27.4
OPERATIONS - Site Management/Operations	0.0	0.0	0.0	0.0	0.0	0.0	0.0	0.0	1,461.2
OPERATIONS - Site Infrastructure	0.0	0.0	0.0	0.0	0.0	0.0	0.0	0.0	257.9
OPERATIONS - National Laboratories	0.0	0.0	0.0	0.0	0.0	0.0	0.0	0.0	587.0
OPERATIONS - Site Constructors	0.0	0.0	0.0	0.0	0.0	0.0	0.0	0.0	0.0
OPERATIONS - Architecture/Engineering Contractors	0.0	0.0	0.0	0.0	0.0	0.0	0.0	0.0	0.0
OPERATIONS - Construction Contractor	0.0	0.0	0.0	0.0	0.0	0.0	0.0	0.0	0.0

Worker Category Base FTE (FTE)	FY33	FY34	FY35	FY36	FY37	FY38	FY39	FY40	Totals
Engineer/Management	0.0	0.0	0.0	0.0	0.0	0.0	0.0	0.0	548.3
Crafts	0.0	0.0	0.0	0.0	0.0	0.0	0.0	0.0	22.2
Maintenance	0.0	0.0	0.0	0.0	0.0	0.0	0.0	0.0	614.5
Operators	0.0	0.0	0.0	0.0	0.0	0.0	0.0	0.0	1,024.1
Infrastructure	0.0	0.0	0.0	0.0	0.0	0.0	0.0	0.0	274.5
Total	0.0	0.0	0.0	0.0	0.0	0.0	0.0	0.0	2,483.6

ALTERNATIVE 3 HLWV REDDICK COST BREAKDOWN	FY95	FY96	FY97	FY98	FY99	FY00
Activity % of Alternative 3 HLWV Reddick Costs (%)						
Studies/Permitting	100	100	100	0	0	0
Design	0	0	0	100	100	100
Construction/D&D	0	0	0	0	0	0
Operation	0	0	0	0	0	0
Total Percentage	**100**	**100**	**100**	**100**	**100**	**100**
Alternative 3 HLWV Reddick Costs($)						
Studies/Permitting	990,000	1,980,000	3,960,000	0	0	0
Design	0	0	0	6,270,000	13,200,000	13,200,000
Construction/D&D	0	0	0	0	0	0
Operation	0	0	0	0	0	0
Total Cost	**990,000**	**1,980,000**	**3,960,000**	**6,270,000**	**13,200,000**	**13,200,000**

ALTERNATIVE 3 HLWV REDDICK FTE BREAKDOWN	FY95	FY96	FY97	FY98	FY99	FY00
Contractor FTE per Alternative 3 HLWV Activity (FTE)						
STUDIES/PERMITTING - Site Management/Operations	5.7	11.4	22.8	0.0	0.0	0.0
STUDIES/PERMITTING - Site Infrastructure	1.0	2.0	4.0	0.0	0.0	0.0
STUDIES/PERMITTING - National Laboratories	0.3	0.5	1.1	0.0	0.0	0.0
STUDIES/PERMITTING - Site Constructors	0.0	0.0	0.0	0.0	0.0	0.0
STUDIES/PERMITTING - Architecture/Engineering Contract	0.0	0.0	0.0	0.0	0.0	0.0
STUDIES/PERMITTING - Construction Contractor	0.0	0.0	0.0	0.0	0.0	0.0
DESIGN - Site Management/Operations	0.0	0.0	0.0	3.8	8.0	8.0
DESIGN - Site Infrastructure	0.0	0.0	0.0	0.7	1.4	1.4
DESIGN - National Laboratories	0.0	0.0	0.0	3.4	7.1	7.1
DESIGN - Site Constructors	0.0	0.0	0.0	2.2	4.7	4.7
DESIGN - Architecture/Engineering Contractors	0.0	0.0	0.0	26.1	55.0	55.0
DESIGN - Construction Contractor	0.0	0.0	0.0	0.0	0.0	0.0
CONSTRUCTION/D&D - Site Management/Operations	0.0	0.0	0.0	0.0	0.0	0.0
CONSTRUCTION/D&D - Site Infrastructure	0.0	0.0	0.0	0.0	0.0	0.0
CONSTRUCTION/D&D - National Laboratories	0.0	0.0	0.0	0.0	0.0	0.0
CONSTRUCTION/D&D - Site Constructors	0.0	0.0	0.0	0.0	0.0	0.0
CONSTRUCTION/D&D - Architecture/Engineering Contracto	0.0	0.0	0.0	0.0	0.0	0.0
CONSTRUCTION/D&D - Construction Contractor	0.0	0.0	0.0	0.0	0.0	0.0
OPERATIONS - Site Management/Operations	0.0	0.0	0.0	0.0	0.0	0.0
OPERATIONS - Site Infrastructure	0.0	0.0	0.0	0.0	0.0	0.0
OPERATIONS - National Laboratories	0.0	0.0	0.0	0.0	0.0	0.0
OPERATIONS - Site Constructors	0.0	0.0	0.0	0.0	0.0	0.0
OPERATIONS - Architecture/Engineering Contractors	0.0	0.0	0.0	0.0	0.0	0.0
OPERATIONS - Construction Contractor	0.0	0.0	0.0	0.0	0.0	0.0
Worker Category Reddick FTE (FTE)						
Engineer/Management	6.0	12.0	23.9	35.5	74.8	74.8
Crafts	0.0	0.0	0.0	0.0	0.0	0.0
Maintenance	0.0	0.0	0.0	0.0	0.0	0.0
Operators	0.0	0.0	0.0	0.0	0.0	0.0
Infrastructure	1.0	2.0	4.0	0.7	1.4	1.4
Total	**7.0**	**14.0**	**27.9**	**36.2**	**76.2**	**76.2**

ALTERNATIVE 3 HLWV COST SUMMARY	FY95	FY96	FY97	FY98	FY99	FY00
Studies/Permitting	7,102,047	9,675,852	10,088,623	281,052	0	0
Design	679,116	855,095	0	6,270,000	13,200,000	13,200,000
Construction/D&D	1,358,233	1,710,189	1,532,156	56,210	0	0
Operation	5,432,931	6,840,758	7,660,779	786,946	0	0
Total	14,572,327	19,081,894	19,281,558	7,394,209	13,200,000	13,200,000

ALTERNATIVE 3 HLWV FTE SUMMARY	FY95	FY96	FY97	FY98	FY99	FY00
Engineer/Management	54.1	72.5	70.7	38.1	74.8	74.8
Crafts	6.5	8.2	7.3	0.3	0.0	0.0
Maintenance	7.6	9.6	10.8	1.1	0.0	0.0
Operators	12.7	16.0	17.9	1.8	0.0	0.0
Infrastructure	9.3	12.4	13.6	1.4	1.4	1.4
Total	90.2	118.7	120.3	42.6	76.2	76.2

ALTERNATIVE 3 HLWV REDDICK COST BREAKDOWN	FY01	FY02	FY03	FY04	FY05	FY06
Activity % of Alternative 3 HLWV Reddick Costs (%)						
Studies/Permitting	0	0	0	0	0	0
Design	0	0	0	0	0	0
Construction/D&D	100	100	100	0	0	0
Operation	0	0	0	100	100	100
Total Percentage	**100**	**100**	**100**	**100**	**100**	**100**
Alternative 3 HLWV Reddick Costs($)						
Studies/Permitting	0	0	0	0	0	0
Design	0	0	0	0	0	0
Construction/D&D	22,440,000	51,590,000	65,450,000	0	0	0
Operation	0	0	0	23,100,000	23,100,000	23,100,000
Total Cost	**22,440,000**	**51,590,000**	**65,450,000**	**23,100,000**	**23,100,000**	**23,100,000**

ALTERNATIVE 3 HLWV REDDICK FTE BREAKDOWN	FY01	FY02	FY03	FY04	FY05	FY06
Contractor FTE per Alternative 3 HLWV Activity (FTE)						
STUDIES/PERMITTING - Site Management/Operations	0.0	0.0	0.0	0.0	0.0	0.0
STUDIES/PERMITTING - Site Infrastructure	0.0	0.0	0.0	0.0	0.0	0.0
STUDIES/PERMITTING - National Laboratories	0.0	0.0	0.0	0.0	0.0	0.0
STUDIES/PERMITTING - Site Constructors	0.0	0.0	0.0	0.0	0.0	0.0
STUDIES/PERMITTING - Architecture/Engineering Contract	0.0	0.0	0.0	0.0	0.0	0.0
STUDIES/PERMITTING - Construction Contractor	0.0	0.0	0.0	0.0	0.0	0.0
DESIGN - Site Management/Operations	0.0	0.0	0.0	0.0	0.0	0.0
DESIGN - Site Infrastructure	0.0	0.0	0.0	0.0	0.0	0.0
DESIGN - National Laboratories	0.0	0.0	0.0	0.0	0.0	0.0
DESIGN - Site Constructors	0.0	0.0	0.0	0.0	0.0	0.0
DESIGN - Architecture/Engineering Contractors	0.0	0.0	0.0	0.0	0.0	0.0
DESIGN - Construction Contractor	0.0	0.0	0.0	0.0	0.0	0.0
CONSTRUCTION/D&D - Site Management/Operations	13.6	31.3	39.7	0.0	0.0	0.0
CONSTRUCTION/D&D - Site Infrastructure	2.4	5.5	7.0	0.0	0.0	0.0
CONSTRUCTION/D&D - National Laboratories	0.0	0.0	0.0	0.0	0.0	0.0
CONSTRUCTION/D&D - Site Constructors	8.0	18.4	23.4	0.0	0.0	0.0
CONSTRUCTION/D&D - Architecture/Engineering Contracto	6.2	14.3	18.2	0.0	0.0	0.0
CONSTRUCTION/D&D - Construction Contractor	132.0	303.5	385.0	0.0	0.0	0.0
OPERATIONS - Site Management/Operations	0.0	0.0	0.0	98.2	98.2	98.2
OPERATIONS - Site Infrastructure	0.0	0.0	0.0	17.3	17.3	17.3
OPERATIONS - National Laboratories	0.0	0.0	0.0	12.4	12.4	12.4
OPERATIONS - Site Constructors	0.0	0.0	0.0	0.0	0.0	0.0
OPERATIONS - Architecture/Engineering Contractors	0.0	0.0	0.0	0.0	0.0	0.0
OPERATIONS - Construction Contractor	0.0	0.0	0.0	0.0	0.0	0.0
Worker Category Reddick FTE (FTE)						
Engineer/Management	52.7	121.1	153.6	22.1	22.1	22.1
Crafts	107.2	246.5	312.7	0.0	0.0	0.0
Maintenance	0.0	0.0	0.0	33.2	33.2	33.2
Operators	0.0	0.0	0.0	55.3	55.3	55.3
Infrastructure	2.4	5.5	7.0	17.3	17.3	17.3
Total	**162.3**	**373.1**	**473.3**	**127.9**	**127.9**	**127.9**

ALTERNATIVE 3 HLWV COST SUMMARY	FY01	FY02	FY03	FY04	FY05	FY06
Studies/Permitting	0	0	0	0	0	0
Design	0	0	0	0	0	0
Construction/D&D	22,440,000	51,590,000	65,450,000	0	0	0
Operation	0	0	0	23,957,272	39,382,120	59,434,800
Total	22,440,000	51,590,000	65,450,000	23,957,272	39,382,120	59,434,800

ALTERNATIVE 3 HLWV FTE SUMMARY	FY01	FY02	FY03	FY04	FY05	FY06
Engineer/Management	52.7	121.1	153.6	22.9	37.4	56.1
Crafts	107.2	246.5	312.7	0.0	0.0	0.0
Maintenance	0.0	0.0	0.0	34.4	56.0	84.2
Operators	0.0	0.0	0.0	57.3	93.4	140.3
Infrastructure	2.4	5.5	7.0	17.8	28.9	38.7
Total	162.3	373.1	473.3	132.4	213.7	319.4

ALTERNATIVE 3 HLWV REDDICK COST BREAKDOWN	FY07	FY08	FY09	FY10	FY11	FY12
Activity % of Alternative 3 HLWV Reddick Costs (%)						
Studies/Permitting	0	0	0	0	0	0
Design	0	0	0	0	0	0
Construction/D&D	0	0	0	0	0	0
Operation	100	100	0	0	0	0
Total Percentage	**100**	**100**	**0**	**0**	**0**	**0**
Alternative 3 HLWV Reddick Costs($)						
Studies/Permitting	0	0	0	0	0	0
Design	0	0	0	0	0	0
Construction/D&D	0	0	0	0	0	0
Operation	23,100,000	23,100,000	0	0	0	0
Total Cost	**23,100,000**	**23,100,000**	**0**	**0**	**0**	**0**

ALTERNATIVE 3 HLWV REDDICK FTE BREAKDOWN	FY07	FY08	FY09	FY10	FY11	FY12
Contractor FTE per Alternative 3 HLWV Activity (FTE)						
STUDIES/PERMITTING - Site Management/Operations	0.0	0.0	0.0	0.0	0.0	0.0
STUDIES/PERMITTING - Site Infrastructure	0.0	0.0	0.0	0.0	0.0	0.0
STUDIES/PERMITTING - National Laboratories	0.0	0.0	0.0	0.0	0.0	0.0
STUDIES/PERMITTING - Site Constructors	0.0	0.0	0.0	0.0	0.0	0.0
STUDIES/PERMITTING - Architecture/Engineering Contract	0.0	0.0	0.0	0.0	0.0	0.0
STUDIES/PERMITTING - Construction Contractor	0.0	0.0	0.0	0.0	0.0	0.0
DESIGN - Site Management/Operations	0.0	0.0	0.0	0.0	0.0	0.0
DESIGN - Site Infrastructure	0.0	0.0	0.0	0.0	0.0	0.0
DESIGN - National Laboratories	0.0	0.0	0.0	0.0	0.0	0.0
DESIGN - Site Constructors	0.0	0.0	0.0	0.0	0.0	0.0
DESIGN - Architecture/Engineering Contractors	0.0	0.0	0.0	0.0	0.0	0.0
DESIGN - Construction Contractor	0.0	0.0	0.0	0.0	0.0	0.0
CONSTRUCTION/D&D - Site Management/Operations	0.0	0.0	0.0	0.0	0.0	0.0
CONSTRUCTION/D&D - Site Infrastructure	0.0	0.0	0.0	0.0	0.0	0.0
CONSTRUCTION/D&D - National Laboratories	0.0	0.0	0.0	0.0	0.0	0.0
CONSTRUCTION/D&D - Site Constructors	0.0	0.0	0.0	0.0	0.0	0.0
CONSTRUCTION/D&D - Architecture/Engineering Contracto	0.0	0.0	0.0	0.0	0.0	0.0
CONSTRUCTION/D&D - Construction Contractor	0.0	0.0	0.0	0.0	0.0	0.0
OPERATIONS - Site Management/Operations	98.2	98.2	0.0	0.0	0.0	0.0
OPERATIONS - Site Infrastructure	17.3	17.3	0.0	0.0	0.0	0.0
OPERATIONS - National Laboratories	12.4	12.4	0.0	0.0	0.0	0.0
OPERATIONS - Site Constructors	0.0	0.0	0.0	0.0	0.0	0.0
OPERATIONS - Architecture/Engineering Contractors	0.0	0.0	0.0	0.0	0.0	0.0
OPERATIONS - Construction Contractor	0.0	0.0	0.0	0.0	0.0	0.0
Worker Category Reddick FTE (FTE)						
Engineer/Management	22.1	22.1	0.0	0.0	0.0	0.0
Crafts	0.0	0.0	0.0	0.0	0.0	0.0
Maintenance	33.2	33.2	0.0	0.0	0.0	0.0
Operators	55.3	55.3	0.0	0.0	0.0	0.0
Infrastructure	17.3	17.3	0.0	0.0	0.0	0.0
Total	**127.9**	**127.9**	**0.0**	**0.0**	**0.0**	**0.0**

ALTERNATIVE 3 HLWV COST SUMMARY	FY07	FY08	FY09	FY10	FY11	FY12
Studies/Permitting	**0**	**0**	**0**	**0**	**0**	**0**
Design	**0**	**0**	**0**	**0**	**0**	**0**
Construction/D&D	**0**	**0**	**0**	**0**	**0**	**0**
Operation	**81,398,612**	**101,684,160**	**6,753,131**	**219,742,768**	**0**	**0**
Total	**81,398,612**	**101,684,160**	**6,753,131**	**219,742,768**	**0**	**0**

ALTERNATIVE 3 HLWV FTE SUMMARY	FY07	FY08	FY09	FY10	FY11	FY12
Engineer/Management	**76.7**	**95.7**	**6.3**	**205.7**	**0.0**	**0.0**
Crafts	**0.0**	**0.0**	**0.0**	**0.0**	**0.0**	**0.0**
Maintenance	**115.0**	**143.5**	**9.5**	**308.6**	**0.0**	**0.0**
Operators	**191.7**	**239.2**	**15.8**	**514.3**	**0.0**	**0.0**
Infrastructure	**51.7**	**63.6**	**4.0**	**129.5**	**0.0**	**0.0**
Total	**435.1**	**542.0**	**35.6**	**1,158.1**	**0.0**	**0.0**

ALTERNATIVE 3 HLWV REDDICK COST BREAKDOWN	FY13	FY14	FY15	FY16	FY17	FY18	FY19	FY20	FY21
Activity % of Alternative 3 HLWV Reddick Costs (%)									
Studies/Permitting	0	0	0	0	0	0	0	0	0
Design	0	0	0	0	0	0	0	0	0
Construction/D&D	0	0	0	0	0	0	0	0	0
Operation	0	0	0	0	0	0	0	0	0
Total Percentage	0	0	0	0	0	0	0	0	0
Alternative 3 HLWV Reddick Costs($)									
Studies/Permitting	0	0	0	0	0	0	0	0	0
Design	0	0	0	0	0	0	0	0	0
Construction/D&D	0	0	0	0	0	0	0	0	0
Operation	0	0	0	0	0	0	0	0	0
Total Cost	0	0	0	0	0	0	0	0	0

ALTERNATIVE 3 HLWV REDDICK FTE BREAKDOWN	FY13	FY14	FY15	FY16	FY17	FY18	FY19	FY20	FY21
Contractor FTE per Alternative 3 HLWV Activity (FTE)									
STUDIES/PERMITTING - Site Management/Operations	0.0	0.0	0.0	0.0	0.0	0.0	0.0	0.0	0.0
STUDIES/PERMITTING - Site Infrastructure	0.0	0.0	0.0	0.0	0.0	0.0	0.0	0.0	0.0
STUDIES/PERMITTING - National Laboratories	0.0	0.0	0.0	0.0	0.0	0.0	0.0	0.0	0.0
STUDIES/PERMITTING - Site Constructors	0.0	0.0	0.0	0.0	0.0	0.0	0.0	0.0	0.0
STUDIES/PERMITTING - Architecture/Engineering Contract	0.0	0.0	0.0	0.0	0.0	0.0	0.0	0.0	0.0
STUDIES/PERMITTING - Construction Contractor	0.0	0.0	0.0	0.0	0.0	0.0	0.0	0.0	0.0
DESIGN - Site Management/Operations	0.0	0.0	0.0	0.0	0.0	0.0	0.0	0.0	0.0
DESIGN - Site Infrastructure	0.0	0.0	0.0	0.0	0.0	0.0	0.0	0.0	0.0
DESIGN - National Laboratories	0.0	0.0	0.0	0.0	0.0	0.0	0.0	0.0	0.0
DESIGN - Site Constructors	0.0	0.0	0.0	0.0	0.0	0.0	0.0	0.0	0.0
DESIGN - Architecture/Engineering Contractors	0.0	0.0	0.0	0.0	0.0	0.0	0.0	0.0	0.0
DESIGN - Construction Contractor	0.0	0.0	0.0	0.0	0.0	0.0	0.0	0.0	0.0
CONSTRUCTION/D&D - Site Management/Operations	0.0	0.0	0.0	0.0	0.0	0.0	0.0	0.0	0.0
CONSTRUCTION/D&D - Site Infrastructure	0.0	0.0	0.0	0.0	0.0	0.0	0.0	0.0	0.0
CONSTRUCTION/D&D - National Laboratories	0.0	0.0	0.0	0.0	0.0	0.0	0.0	0.0	0.0
CONSTRUCTION/D&D - Site Constructors	0.0	0.0	0.0	0.0	0.0	0.0	0.0	0.0	0.0
CONSTRUCTION/D&D - Architecture/Engineering Contracto	0.0	0.0	0.0	0.0	0.0	0.0	0.0	0.0	0.0
CONSTRUCTION/D&D - Construction Contractor	0.0	0.0	0.0	0.0	0.0	0.0	0.0	0.0	0.0
OPERATIONS - Site Management/Operations	0.0	0.0	0.0	0.0	0.0	0.0	0.0	0.0	0.0
OPERATIONS - Site Infrastructure	0.0	0.0	0.0	0.0	0.0	0.0	0.0	0.0	0.0
OPERATIONS - National Laboratories	0.0	0.0	0.0	0.0	0.0	0.0	0.0	0.0	0.0
OPERATIONS - Site Constructors	0.0	0.0	0.0	0.0	0.0	0.0	0.0	0.0	0.0
OPERATIONS - Architecture/Engineering Contractors	0.0	0.0	0.0	0.0	0.0	0.0	0.0	0.0	0.0
OPERATIONS - Construction Contractor	0.0	0.0	0.0	0.0	0.0	0.0	0.0	0.0	0.0
Worker Category Reddick FTE (FTE)									
Engineer/Management	0.0	0.0	0.0	0.0	0.0	0.0	0.0	0.0	0.0
Crafts	0.0	0.0	0.0	0.0	0.0	0.0	0.0	0.0	0.0
Maintenance	0.0	0.0	0.0	0.0	0.0	0.0	0.0	0.0	0.0
Operators	0.0	0.0	0.0	0.0	0.0	0.0	0.0	0.0	0.0
Infrastructure	0.0	0.0	0.0	0.0	0.0	0.0	0.0	0.0	0.0
Total	0.0	0.0	0.0	0.0	0.0	0.0	0.0	0.0	0.0

ALTERNATIVE 3 HLWV COST SUMMARY	FY13	FY14	FY15	FY16	FY17	FY18	FY19	FY20	FY21
Studies/Permitting	0	0	0	0	0	0	0	0	0
Design	0	0	0	0	0	0	0	0	0
Construction/D&D	0	0	0	0	0	0	0	0	0
Operation	0	0	0	0	0	0	0	0	0
Total	0	0	0	0	0	0	0	0	0

ALTERNATIVE 3 HLWV FTE SUMMARY	FY13	FY14	FY15	FY16	FY17	FY18	FY19	FY20	FY21
Engineer/Management	0.0	0.0	0.0	0.0	0.0	0.0	0.0	0.0	0.0
Crafts	0.0	0.0	0.0	0.0	0.0	0.0	0.0	0.0	0.0
Maintenance	0.0	0.0	0.0	0.0	0.0	0.0	0.0	0.0	0.0
Operators	0.0	0.0	0.0	0.0	0.0	0.0	0.0	0.0	0.0
Infrastructure	0.0	0.0	0.0	0.0	0.0	0.0	0.0	0.0	0.0
Total	0.0	0.0	0.0	0.0	0.0	0.0	0.0	0.0	0.0

ALTERNATIVE 3 HLWV REDDICK COST BREAKDOWN	FY22	FY23	FY24	FY25	FY26	FY27	FY28	FY29	FY30	FY31	FY32
Activity % of Alternative 3 HLWV Reddick Costs (%)											
Studies/Permitting	0	0	0	0	0	0	0	0	0	0	0
Design	0	0	0	0	0	0	0	0	0	0	0
Construction/D&D	0	0	0	0	0	0	0	0	0	0	0
Operation	0	0	0	0	0	0	0	0	0	0	0
Total Percentage	0	0	0	0	0	0	0	0	0	0	0
Alternative 3 HLWV Reddick Costs($)											
Studies/Permitting	0	0	0	0	0	0	0	0	0	0	0
Design	0	0	0	0	0	0	0	0	0	0	0
Construction/D&D	0	0	0	0	0	0	0	0	0	0	0
Operation	0	0	0	0	0	0	0	0	0	0	0
Total Cost	0	0	0	0	0	0	0	0	0	0	0

ALTERNATIVE 3 HLWV REDDICK FTE BREAKDOWN	FY22	FY23	FY24	FY25	FY26	FY27	FY28	FY29	FY30	FY31	FY32
Contractor FTE per Alternative 3 HLWV Activity (FTE)											
STUDIES/PERMITTING - Site Management/Operations	0.0	0.0	0.0	0.0	0.0	0.0	0.0	0.0	0.0	0.0	0.0
STUDIES/PERMITTING - Site Infrastructure	0.0	0.0	0.0	0.0	0.0	0.0	0.0	0.0	0.0	0.0	0.0
STUDIES/PERMITTING - National Laboratories	0.0	0.0	0.0	0.0	0.0	0.0	0.0	0.0	0.0	0.0	0.0
STUDIES/PERMITTING - Site Constructors	0.0	0.0	0.0	0.0	0.0	0.0	0.0	0.0	0.0	0.0	0.0
STUDIES/PERMITTING - Architecture/Engineering Contract	0.0	0.0	0.0	0.0	0.0	0.0	0.0	0.0	0.0	0.0	0.0
STUDIES/PERMITTING - Construction Contractor	0.0	0.0	0.0	0.0	0.0	0.0	0.0	0.0	0.0	0.0	0.0
DESIGN - Site Management/Operations	0.0	0.0	0.0	0.0	0.0	0.0	0.0	0.0	0.0	0.0	0.0
DESIGN - Site Infrastructure	0.0	0.0	0.0	0.0	0.0	0.0	0.0	0.0	0.0	0.0	0.0
DESIGN - National Laboratories	0.0	0.0	0.0	0.0	0.0	0.0	0.0	0.0	0.0	0.0	0.0
DESIGN - Site Constructors	0.0	0.0	0.0	0.0	0.0	0.0	0.0	0.0	0.0	0.0	0.0
DESIGN - Architecture/Engineering Contractors	0.0	0.0	0.0	0.0	0.0	0.0	0.0	0.0	0.0	0.0	0.0
DESIGN - Construction Contractor	0.0	0.0	0.0	0.0	0.0	0.0	0.0	0.0	0.0	0.0	0.0
CONSTRUCTION/D&D - Site Management/Operations	0.0	0.0	0.0	0.0	0.0	0.0	0.0	0.0	0.0	0.0	0.0
CONSTRUCTION/D&D - Site Infrastructure	0.0	0.0	0.0	0.0	0.0	0.0	0.0	0.0	0.0	0.0	0.0
CONSTRUCTION/D&D - National Laboratories	0.0	0.0	0.0	0.0	0.0	0.0	0.0	0.0	0.0	0.0	0.0
CONSTRUCTION/D&D - Site Constructors	0.0	0.0	0.0	0.0	0.0	0.0	0.0	0.0	0.0	0.0	0.0
CONSTRUCTION/D&D - Architecture/Engineering Contracto	0.0	0.0	0.0	0.0	0.0	0.0	0.0	0.0	0.0	0.0	0.0
CONSTRUCTION/D&D - Construction Contractor	0.0	0.0	0.0	0.0	0.0	0.0	0.0	0.0	0.0	0.0	0.0
OPERATIONS - Site Management/Operations	0.0	0.0	0.0	0.0	0.0	0.0	0.0	0.0	0.0	0.0	0.0
OPERATIONS - Site Infrastructure	0.0	0.0	0.0	0.0	0.0	0.0	0.0	0.0	0.0	0.0	0.0
OPERATIONS - National Laboratories	0.0	0.0	0.0	0.0	0.0	0.0	0.0	0.0	0.0	0.0	0.0
OPERATIONS - Site Constructors	0.0	0.0	0.0	0.0	0.0	0.0	0.0	0.0	0.0	0.0	0.0
OPERATIONS - Architecture/Engineering Contractors	0.0	0.0	0.0	0.0	0.0	0.0	0.0	0.0	0.0	0.0	0.0
OPERATIONS - Construction Contractor	0.0	0.0	0.0	0.0	0.0	0.0	0.0	0.0	0.0	0.0	0.0
Worker Category Reddick FTE (FTE)											
Engineer/Management	0.0	0.0	0.0	0.0	0.0	0.0	0.0	0.0	0.0	0.0	0.0
Crafts	0.0	0.0	0.0	0.0	0.0	0.0	0.0	0.0	0.0	0.0	0.0
Maintenance	0.0	0.0	0.0	0.0	0.0	0.0	0.0	0.0	0.0	0.0	0.0
Operators	0.0	0.0	0.0	0.0	0.0	0.0	0.0	0.0	0.0	0.0	0.0
Infrastructure	0.0	0.0	0.0	0.0	0.0	0.0	0.0	0.0	0.0	0.0	0.0
Total	0.0	0.0	0.0	0.0	0.0	0.0	0.0	0.0	0.0	0.0	0.0

ALTERNATIVE 3 HLWV COST SUMMARY	FY22	FY23	FY24	FY25	FY26	FY27	FY28	FY29	FY30	FY31	FY32
Studies/Permitting	0	0	0	0	0	0	0	0	0	0	0
Design	0	0	0	0	0	0	0	0	0	0	0
Construction/D&D	0	0	0	0	0	0	0	0	0	0	0
Operation	0	0	0	0	0	0	0	0	0	0	0
Total	0	0	0	0	0	0	0	0	0	0	0

ALTERNATIVE 3 HLWV FTE SUMMARY	FY22	FY23	FY24	FY25	FY26	FY27	FY28	FY29	FY30	FY31	FY32
Engineer/Management	0.0	0.0	0.0	0.0	0.0	0.0	0.0	0.0	0.0	0.0	0.0
Crafts	0.0	0.0	0.0	0.0	0.0	0.0	0.0	0.0	0.0	0.0	0.0
Maintenance	0.0	0.0	0.0	0.0	0.0	0.0	0.0	0.0	0.0	0.0	0.0
Operators	0.0	0.0	0.0	0.0	0.0	0.0	0.0	0.0	0.0	0.0	0.0
Infrastructure	0.0	0.0	0.0	0.0	0.0	0.0	0.0	0.0	0.0	0.0	0.0
Total	0.0	0.0	0.0	0.0	0.0	0.0	0.0	0.0	0.0	0.0	0.0

ALTERNATIVE 3 HLWV REDDICK COST BREAKDOWN	FY33	FY34	FY35	FY36	FY37	FY38	FY39	FY40	
Activity % of Alternative 3 HLWV Reddick Costs (%)									
Studies/Permitting	0	0	0	0	0	0	0	0	
Design	0	0	0	0	0	0	0	0	
Construction/D&D	0	0	0	0	0	0	0	0	
Operation	0	0	0	0	0	0	0	0	
Total Percentage	0	0	0	0	0	0	0	0	
Alternative 3 HLWV Reddick Costs($)									**Totals**
Studies/Permitting	0	0	0	0	0	0	0	0	6,930,000
Design	0	0	0	0	0	0	0	0	32,670,000
Construction/D&D	0	0	0	0	0	0	0	0	139,480,000
Operation	0	0	0	0	0	0	0	0	115,500,000
Total Cost	0	0	0	0	0	0	0	0	294,580,000

ALTERNATIVE 3 HLWV REDDICK FTE BREAKDOWN	FY33	FY34	FY35	FY36	FY37	FY38	FY39	FY40	Totals
Contractor FTE per Alternative 3 HLWV Activity (FTE)									
STUDIES/PERMITTING - Site Management/Operations	0.0	0.0	0.0	0.0	0.0	0.0	0.0	0.0	40.0
STUDIES/PERMITTING - Site Infrastructure	0.0	0.0	0.0	0.0	0.0	0.0	0.0	0.0	7.1
STUDIES/PERMITTING - National Laboratories	0.0	0.0	0.0	0.0	0.0	0.0	0.0	0.0	1.9
STUDIES/PERMITTING - Site Constructors	0.0	0.0	0.0	0.0	0.0	0.0	0.0	0.0	0.0
STUDIES/PERMITTING - Architecture/Engineering Contract	0.0	0.0	0.0	0.0	0.0	0.0	0.0	0.0	0.0
STUDIES/PERMITTING - Construction Contractor	0.0	0.0	0.0	0.0	0.0	0.0	0.0	0.0	0.0
DESIGN - Site Management/Operations	0.0	0.0	0.0	0.0	0.0	0.0	0.0	0.0	19.8
DESIGN - Site Infrastructure	0.0	0.0	0.0	0.0	0.0	0.0	0.0	0.0	3.5
DESIGN - National Laboratories	0.0	0.0	0.0	0.0	0.0	0.0	0.0	0.0	17.5
DESIGN - Site Constructors	0.0	0.0	0.0	0.0	0.0	0.0	0.0	0.0	11.7
DESIGN - Architecture/Engineering Contractors	0.0	0.0	0.0	0.0	0.0	0.0	0.0	0.0	136.1
DESIGN - Construction Contractor	0.0	0.0	0.0	0.0	0.0	0.0	0.0	0.0	0.0
CONSTRUCTION/D&D - Site Management/Operations	0.0	0.0	0.0	0.0	0.0	0.0	0.0	0.0	84.7
CONSTRUCTION/D&D - Site Infrastructure	0.0	0.0	0.0	0.0	0.0	0.0	0.0	0.0	14.9
CONSTRUCTION/D&D - National Laboratories	0.0	0.0	0.0	0.0	0.0	0.0	0.0	0.0	0.0
CONSTRUCTION/D&D - Site Constructors	0.0	0.0	0.0	0.0	0.0	0.0	0.0	0.0	49.8
CONSTRUCTION/D&D - Architecture/Engineering Contracto	0.0	0.0	0.0	0.0	0.0	0.0	0.0	0.0	38.7
CONSTRUCTION/D&D - Construction Contractor	0.0	0.0	0.0	0.0	0.0	0.0	0.0	0.0	820.5
OPERATIONS - Site Management/Operations	0.0	0.0	0.0	0.0	0.0	0.0	0.0	0.0	490.9
OPERATIONS - Site Infrastructure	0.0	0.0	0.0	0.0	0.0	0.0	0.0	0.0	86.6
OPERATIONS - National Laboratories	0.0	0.0	0.0	0.0	0.0	0.0	0.0	0.0	62.0
OPERATIONS - Site Constructors	0.0	0.0	0.0	0.0	0.0	0.0	0.0	0.0	0.0
OPERATIONS - Architecture/Engineering Contractors	0.0	0.0	0.0	0.0	0.0	0.0	0.0	0.0	0.0
OPERATIONS - Construction Contractor	0.0	0.0	0.0	0.0	0.0	0.0	0.0	0.0	0.0
Worker Category Reddick FTE (FTE)									
Engineer/Management	0.0	0.0	0.0	0.0	0.0	0.0	0.0	0.0	664.9
Crafts	0.0	0.0	0.0	0.0	0.0	0.0	0.0	0.0	666.3
Maintenance	0.0	0.0	0.0	0.0	0.0	0.0	0.0	0.0	165.9
Operators	0.0	0.0	0.0	0.0	0.0	0.0	0.0	0.0	276.4
Infrastructure	0.0	0.0	0.0	0.0	0.0	0.0	0.0	0.0	112.1
Total	0.0	0.0	0.0	0.0	0.0	0.0	0.0	0.0	1,885.7

ALTERNATIVE 3 HLWV COST SUMMARY	FY33	FY34	FY35	FY36	FY37	FY38	FY39	FY40	Totals
Studies/Permitting	0	0	0	0	0	0	0	0	27,147,575
Design	0	0	0	0	0	0	0	0	34,204,211
Construction/D&D	0	0	0	0	0	0	0	0	144,136,788
Operation	0	0	0	0	0	0	0	0	553,074,277
Total	0	0	0	0	0	0	0	0	758,562,851

ALTERNATIVE 3 HLWV FTE SUMMARY	FY33	FY34	FY35	FY36	FY37	FY38	FY39	FY40	Totals
Engineer/Management	0.0	0.0	0.0	0.0	0.0	0.0	0.0	0.0	1,213.2
Crafts	0.0	0.0	0.0	0.0	0.0	0.0	0.0	0.0	688.6
Maintenance	0.0	0.0	0.0	0.0	0.0	0.0	0.0	0.0	780.3
Operators	0.0	0.0	0.0	0.0	0.0	0.0	0.0	0.0	1,300.5
Infrastructure	0.0	0.0	0.0	0.0	0.0	0.0	0.0	0.0	386.6
Total	0.0	0.0	0.0	0.0	0.0	0.0	0.0	0.0	4,369.3

APPENDIX C

SCHEDULE RISK SPREADSHEETS

This page intentionally left blank.

Schedule Risk Parameters

The following tables provide the detailed schedule extension risk calculations. The first table provides a definition of each column in the data tables.

Column	Title	Definition
S1	Estimated Years of Alt 1, 2, or 3 Testing to Delayed Design Benefit	Time expressed in years, that the authors estimate that would be required to complete the identified hot pilot-scale testing after the pilot facility is available.
S2	Estimated Earliest Date of Alt 1, 2, or 3 Hot Pilot Plant Testing Startup	Earliest date the hot pilot facility would be available based on schedules provided in Section 5.2.
S3	Date of TWRS Title II Design Completion Minus 1 Year	Date based on baseline schedule. It is assumed that all testing data would be required 1 year prior to completion of Title II design to be of value.
S4	Estimated TWRS Equipment Replacement Time	This includes design, removal of old equipment, and installation of new equipment. A basic assumption in the estimation of replacement time was that, for high risk unit operations, alternative testing and some preliminary design would be completed prior to any need for equipment replacement.
S5	Replacement Probability if No Testing Beyond Alt. 4	The probability that, after testing at the level proposed in the Baseline Alternative, a unit operation will have a design flaw requiring equipment replacement. The primary considerations were experience with the unit operations, the degree of testing planned in the baseline program, and the complexity of the unit operations.
S6	Probability that Alt 1, 2 or 3 testing will identify risk reducing design change - TPA Schedule	The probability that testing beyond the baseline will develop information that will reduce schedule risk in support of design assuming the existing TPA schedule is met.
S7	Probability that Alt 1, 2 or 3 testing will reduce Startup/Ops Schedule Risk - TPA Schedule	The probability that testing beyond the baseline will develop information that will reduce schedule risk in support of facility operation assuming the existing TPA schedule is met.
S8	Probability that Alt 1, 2 or 3 testing will identify risk reducing design change - Delayed Schedule	The probability that testing beyond the baseline will develop information that will reduce schedule risk in support of design assuming the schedule is delayed to complete testing.
S9	Probability that Alt 1, 2 or 3 testing will reduce Startup/Ops Schedule Risk - Delayed Schedule	The probability that testing beyond the baseline will develop information that will reduce schedule risk in support of facility operation assuming the schedule is delayed to complete testing.
S10	Schedule Extension for Testing to Support Design - TPA Schedule	S4*(S5*(1-S6)); Schedule Extension Risk = Consequence of technology failure [S4] * Probability of technology failure [S5*(1-S6)]
S11	Schedule Extension for Testing to Support Design & Operations - TPA Schedule	S4*(S5*(1-(S6+S7)))
S12	Schedule Extension for Testing to Support Design - Delayed Schedule	S4*(S5*(1-S8))

Column	Title	Definition
S13	Schedule Extension for Testing to Support Design & Operations - Delayed Schedule	S4*(S5*(1-(S8+S9)))
C1, C2, C3, C4	Estimated Annual % Loss of Productive Utilization of staff during Equipment Replacement (Retrieval, Pretreatment, LLW Vitrification, and HLW Vitrification, respectively)	During replacement of a unit operation, one or more facilities would be shut down to allow for the replacement of equipment. Since the functions are interrelated, shutdown of one facility may impact another facility (retrieval, pretreatment, LLW vitrification, HLW vitrification).
C5	Estimated Annual Utilization of Design Staff (full time equivalents)	Estimated to be 10% of the estimated capital equipment costs and $140,000/FTE.
C6	Estimated Annual Utilization of Construction Staff (full time equivalents)	Estimated to be 50% of the estimated capital equipment costs and $85,000/FTE.
C7	Estimated Replacement Equipment Capital Cost	Estimated from information in Boomer et al. (1993).[2]
C8	Cost Risk for Design Support Testing - TPA Schedule	Schedule Extension Risk [S10] * ((loss of productive utilization * annual operating cost) + (annual tank waste safety and operations cost)) + (Equipment Capital Cost [C7] * Probability of technology failure [S5*(1-S6)])
C9	Cost Risk for Design & Operations Support Testing - TPA Schedule	Schedule Extension Risk [S11] * ((loss of productive utilization * annual operating cost) + (annual tank waste safety and operations cost)) + (Equipment Capital Cost [C7] * Probability of technology failure [S5*(1-(S6+S7))])
C10	Cost Risk for Design Support Testing - Delayed Schedule	Schedule Extension Risk [S12] * ((loss of productive utilization * annual operating cost) + (annual tank waste safety and operations cost)) + (Equipment Capital Cost [C7] * Probability of technology failure [S5*(1-S8)])
C11	Cost Risk for Design & Operations Support Testing - Delayed Schedule	Schedule Extension Risk [S13] * ((loss of productive utilization * annual operating cost) + (annual tank waste safety and operations cost)) + (Equipment Capital Cost [C7] * Probability of technology failure [S5*(1-(S8+S9))])
Worker Risk	Industrial Injury Risk, Industrial Death Risk, Transportation Injury Risk, Transportation Death Risk, Radiation Exposure Risk	Schedule Extension Risk * ((loss of productive utilization * annual worker risk) + (annual tank waste safety and operations worker risk))

[2] Boomer, K.D., S.K. Baker, A.L. Boldt, J.D. Galbraith, J.S. Garfield, C.E. Goldberg, B.A. Higley, L.J. Johnson, M.J. Kupfer, R.M. Marusich, R.J. Parazin, A.N. Praga, G.W. Reddick, J.A. Reddick, E.J. Slaathaug, L.M. Swanson, T.L. Waldo, and C.E. Worcester, 1993, *Tank Waste Technical Options*, WHC-EP-0616, Rev. 0, Westinghouse Hanford Company, Richland, Washington.

Baseline Alternative, Schedule Risk	Estimated Years of Alt 1,2,or 3 Testing to Delayed Design Benefit	Estimated Earliest Date of Alt 1, 2, or 3 Hot Pilot Plant Testing Startup	Date of TWRS Title II Design Completion Minus 1 Year	Estimated TWRS Equipment Replacement Time	Replacement probability If No Testing Beyond Alt. 4	Probability that Alt 1,2 or 3 testing will identify risk reducing design change - TPA Schedule	Added Probability Alt 1,2 or 3 testing will reduce Startup/Ops schedule risk - TPA Schedule	Probability That Alt. 1,2 or 3 testing will identify risk reducing design change - Delayed Schedule	Added Probability that Alt 1,2 or 3 testing will reduce Startup/Ops schedule risk - Delayed Sch.	Schedule Extension for Testing to Support Design - TPA Schedule	Schedule Extension for Testing to Support Design & Operations - TPA Schedule	Schedule Extension for Testing to Support Design - Delayed Schedule	Schedule Extension for Testing to Support Design & Operations - Delayed Schedule
	S1	S2	S3	S4	S5	S6	S7	S8	S9	S10	S11	S12	S13
Retrieval													
Sluice				4 yrs	0.2					8.0E-1 yrs	7.2E-1 yrs		
Pretreatment													
Sludge Washing				2 yrs	0.001					2.0E-3 yrs	2.0E-3 yrs		
Solids/Liquid Separation													
In-Tank Settle				2 yrs	0					0 yrs	0 yrs		
Filtration				1 yrs	0.1					1.0E-1 yrs	1.0E-1 yrs		
Cs IX													
Feed Evap.				3 yrs	0					0 yrs	0 yrs		
IX				0.5 yrs	0.001					5.0E-4 yrs	5.0E-4 yrs		
Eluant Conc.				3 yrs	0					0 yrs	0 yrs		
FUNCTION SUBTOTAL										0.10 yrs	0.10 yrs		
LLW VITRIFICATION													
Evap.				3 yrs	0					0 yrs	0 yrs		
Melter				2 yrs	0.1					2.0E-1 yrs	2.0E-1 yrs		
Quencher				1 yrs	0.01					1.0E-2 yrs	1.0E-2 yrs		
Cul Drying				1 yrs	0.001					1.0E-3 yrs	1.0E-3 yrs		
Cyclone				1 yrs	0.001					1.0E-3 yrs	1.0E-3 yrs		
NOx/SO2				2 yrs	0.01					2.0E-2 yrs	2.0E-2 yrs		
Claus React.				2 yrs	0.01					2.0E-2 yrs	2.0E-2 yrs		
FUNCTION SUBTOTAL										0.25 yrs	0.25 yrs		
HLW VITRIFICATION													
Centrifuge				1 yrs	0.01					1.0E-2 yrs	1.0E-2 yrs		
Evap.				3 yrs	0					0 yrs	0 yrs		
Melter				2 yrs	0.1					2.0E-1 yrs	2.0E-1 yrs		
Quench				1 yrs	0.01					1.0E-2 yrs	1.0E-2 yrs		
Vent Scrub				1 yrs	0.01					1.0E-2 yrs	1.0E-2 yrs		
Demist				1 yrs	0.001					1.0E-3 yrs	1.0E-3 yrs		
FUNCTION SUBTOTAL										0.23 yrs	0.23 yrs		
TOTAL										1.39 yrs	1.31 yrs		
TOTAL WITH DELAYS										1.39 yrs	1.31 yrs		

Baseline Alternative. Cost Impact Due to Schedule Risk	Estimated Annual % Loss of Productive Utilization of Retrieval staff during Equip. Replace.	Estimated Annual % Loss of Productive Utilization of Pretreatment staff during Equip. Replace.	Estimated Annual % Loss of Productive Utilization of LLWVIT staff during Equip. Replace.	Estimated Annual % Loss of Productive Utilization of HLWVIT staff during Equip. Replace.	Estimated Annual Utilization of Design Staff (full time equivalents)	Estimated Annual Utilization of Construction Staff (full time equivalents)	Estimated Replacement Equipment Capital Cost	Cost Risk for Design Support Testing - TPA Schedule	Cost Risk for Design & Operations Support Testing - TPA Schedule	Cost Risk for Design Support Testing - Delayed Schedule	Cost Risk for Design & Operations Support Testing - Delayed Schedule
	C1	C2	C3	C4	C5	C6	C7	C8	C9	C10	C11
Retrieval											
Sluice	0.2	0.05	0.05	0	71	500	$1.0E+9	$6.1E+8	$5.7E+8		
Pretreatment											
Sludge Washing	0.9	1	0.9	0	179	441	$1.5E+8	$2.1E+6	$2.1E+6		
Solids/Liquid Separation											
In-Tank Settle	0.9	1	0.9	0	36	294	$1.0E+8	$0	$0		
Filtration	0.9	1	0.9	0	7	59	$1.0E+7	$9.3E+7	$9.3E+7		
Cs IX											
Feed Evap.	0.9	1	0.9	0	8	69	$3.5E+7	$0	$0		
IX	0.9	1	0.9	0	29	235	$2.0E+7	$4.9E+5	$4.9E+5		
Eluant Conc.	0.9	1	0.9	0	8	69	$3.5E+7	$0	$0		
FUNCTION SUBTOTAL					267	1167	$3.5E+8	$9.6E+7	$9.6E+7		
LLW VITRIFICATION											
Evap.	0.9	1	0.9	0	8	69	$3.5E+7	$0	$0		
Melter	0.9	1	0.9	0	321	1200	$9.0E+8	$3.0E+8	$3.0E+8		
Quencher	0.9	1	0.9	0	21	176	$3.0E+7	$9.7E+6	$9.7E+6		
Cul Drying	0.9	1	0.9	0	29	235	$4.0E+7	$9.8E+5	$9.8E+5		
Cyclone	0.9	1	0.9	0	21	176	$3.0E+7	$9.7E+5	$9.7E+5		
NOx/SO2	0.9	1	0.9	0	14	118	$4.0E+7	$1.9E+7	$1.9E+7		
Claus React.	0.9	1	0.9	0	18	147	$5.0E+7	$1.9E+7	$1.9E+7		
FUNCTION SUBTOTAL					433	2122	$1.1E+9	$3.5E+8	$3.5E+8		
HLW VITRIFICATION											
Centrifuge	0.1	0.1	0.1	1	7	59	$1.0E+7	$7.2E+6	$7.2E+6		
Evap.	0.1	0.1	0.1	1	8	69	$3.5E+7	$0	$0		
Melter	0.1	0.1	0.1	1	321	1200	$9.0E+8	$2.6E+8	$2.6E+8		
Quench	0.1	0.1	0.1	1	21	176	$3.0E+7	$7.5E+6	$7.5E+6		
Vent Scrub	0.1	0.1	0.1	1	29	235	$4.0E+7	$7.7E+6	$7.7E+6		
Demist	0.1	0.1	0.1	1	21	176	$3.0E+7	$7.5E+5	$7.5E+5		
FUNCTION SUBTOTAL					408	1916	$1.0E+9	$2.8E+8	$2.8E+8		
TOTAL					1180	5704	$3.5E+9	$1.34E+9	$1.30E+9		
TOTAL WITH DELAYS								$1.34E+9	$1.30E+9		

Baseline Alternative. Worker Risk Impact Due to Schedule Risk	Industrial Injury Risk				Industrial Death Risk				Transportation Injury Risk				Transportation Death Risk				Radiation Exposure Risk			
	Worker Risk Attributed to Schedule Risk For Support of Design - TPA Schedule	Worker Risk Attributed to Schedule Risk for Support of Design & Operations - TPA Schedule	Worker Risk Attributed to Schedule Risk for Support of Design - Delayed Schedule	Worker Risk Attributed to Schedule Risk for Support of Design & Operations - Delayed Schedule	Worker Risk Attributed to Schedule Risk For Support of Design - TPA Schedule	Worker Risk Attributed to Schedule Risk for Support of Design & Operations - TPA Schedule	Worker Risk Attributed to Schedule Risk for Support of Design - Delayed Schedule	Worker Risk Attributed to Schedule Risk for Support of Design & Operations - Delayed Schedule	Worker Risk Attributed to Schedule Risk For Support of Design - TPA Schedule	Worker Risk Attributed to Schedule Risk for Support of Design & Operations - TPA Schedule	Worker Risk Attributed to Schedule Risk for Support of Design - Delayed Schedule	Worker Risk Attributed to Schedule Risk for Support of Design & Operations - Delayed Schedule	Worker Risk Attributed to Schedule Risk For Support of Design - TPA Schedule	Worker Risk Attributed to Schedule Risk for Support of Design & Operations - TPA Schedule	Worker Risk Attributed to Schedule Risk for Support of Design - Delayed Schedule	Worker Risk Attributed to Schedule Risk for Support of Design & Operations - Delayed Schedule	Worker Risk Attributed to Schedule Risk For Support of Design - TPA Schedule	Worker Risk Attributed to Schedule Risk for Support of Design & Operations - TPA Schedule	Worker Risk Attributed to Schedule Risk for Support of Design - Delayed Schedule	Worker Risk Attributed to Schedule Risk for Support of Design & Operations - Delayed Schedule
Retrieval																				
Sluice	131	117			0.268	0.259			0.446	0.402			0.220	0.188			0.132	0.118		
Pretreatment																				
Sludge Washing	0.544	0.544			0.001	0.001			0.002	0.002			0.001	0.001			0.001	0.001		
Solids/Liquid Separation																				
In-Tank Sett	0.000	0.000			0.000	0.000			0.000	0.000			0.000	0.000			0.000	0.000		
Filtration	22.698	22.698			0.039	0.039			0.092	0.092			0.045	0.045			0.022	0.022		
Cs IX																				
Feed Evap.	0.000	0.000			0.000	0.000			0.000	0.000			0.000	0.000			0.000	0.000		
IX	0.124	0.124			0.000	0.000			0.000	0.000			0.000	0.000			0.000	0.000		
Eluant Conc	0.000	0.000			0.000	0.000			0.000	0.000			0.000	0.000			0.000	0.000		
FUNCTION SUBTOTAL	23.57	23.57			0.040	0.040			0.095	0.095			0.047	0.047			0.022	0.022		
LLW VITRIFICATION																				
Evap.	0.00	0.00			0.000	0.000			0.000	0.000			0.000	0.000			0.000	0.000		
Melter	70.38	70.38			0.160	0.160			0.237	0.237			0.117	0.117			0.066	0.066		
Quencher	2.41	2.41			0.004	0.004			0.009	0.009			0.005	0.005			0.002	0.002		
Cul Drying	0.25	0.25			0.000	0.000			0.001	0.001			0.000	0.000			0.000	0.000		
Cyclone	0.24	0.24			0.000	0.000			0.001	0.001			0.000	0.000			0.000	0.000		
NOx/SO2	4.70	4.70			0.008	0.008			0.019	0.019			0.009	0.009			0.004	0.004		
Claus React.	4.76	4.76			0.008	0.008			0.019	0.019			0.009	0.009			0.005	0.005		
FUNCTION SUBTOTAL	82.7	82.7			0.182	0.182			0.286	0.286			0.141	0.141			0.078	0.078		
HLW VITRIFICATION																				
Centrifuge	1.07	1.07			0.002	0.002			0.007	0.007			0.003	0.003			0.002	0.002		
Evap.	0.00	0.00			0.000	0.000			0.000	0.000			0.000	0.000			0.000	0.000		
Melter	57.92	57.92			0.133	0.133			0.192	0.192			0.095	0.095			0.065	0.065		
Quench	1.79	1.79			0.003	0.003			0.007	0.007			0.004	0.004			0.002	0.002		
Vent Scrub	1.85	1.85			0.003	0.003			0.007	0.007			0.004	0.004			0.002	0.002		
Demist	0.18	0.18			0.000	0.000			0.001	0.001			0.000	0.000			0.000	0.000		
FUNCTION SUBTOTAL	63.4	63.4			0.141	0.141			0.215	0.215			0.106	0.106			0.072	0.072		
TOTAL	300	287			0.65	0.62			1.04	1.00			0.51	0.49			0.30	0.29		
TOTAL WITH DELAYS	300	287			0.68	0.62			1.04	1.00			0.51	0.49			0.30	0.29		

Alternative 1. Schedule Risk	Estimated Years of Alt 1,2,or 3 Testing to Delayed Design Benefit	Estimated Earliest Date of Alt 1, 2, or 3 Hot Pilot Plant Testing Startup	Date of TWRS Title II Design Completion Minus 1 Year	Estimated TWRS Equipment Replacement Time	Replacement probability If No Testing Beyond Alt. 4	Probability that Alt 1,2 or 3 testing will identify risk reducing design change - TPA Schedule	Added Probability Alt 1,2 or 3 testing will reduce Startup/Ops schedule risk - TPA Schedule	Probability That Alt. 1,2 or 3 testing will identify risk reducing design change - Delayed Schedule	Added Probability that Alt 1,2 or 3 testing will reduce Startup/Ops schedule risk - Delayed Sch.	Schedule Extension for Testing to Support Design - TPA Schedule	Schedule Extension for Testing to Support Design & Operations - TPA Schedule	Schedule Extension for Testing to Support Design - Delayed Schedule	Schedule Extension for Testing to Support Design & Operations - Delayed Schedule
	S1	S2	S3	S4	S5	S6	S7	S8	S9	S10	S11	S12	S13
Retrieval													
Sluice				4 yrs	0.2	0	0	0	0	8.0E-1 yrs	7.2E-1 yrs	8.0E-1 yrs	7.2E-1 yrs
Pretreatment													
Sludge Washing	4 yrs	Jan-03	Nov-99	2 yrs	0.001	0	0	0.001	0	2.0E-3 yrs	2.0E-3 yrs	2.0E-3 yrs	2.0E-3 yrs
Solids/Liquid Separation													
In-Tank Settle	0 yrs	Jan-03	Nov-99	2 yrs	0	0	0	0	0	0 yrs	0 yrs	0 yrs	0 yrs
Filtration	2 yrs	Jan-03	Nov-99	1 yrs	0.1	0	0.2	0.5	0.1	1.0E-1 yrs	8.0E-2 yrs	5.0E-2 yrs	4.0E-2 yrs
Cs IX													
Feed Evap.	0 yrs	Jan-03	Nov-99	3 yrs	0	0	0	0	0	0 yrs	0 yrs	0 yrs	0 yrs
IX	2 yrs	Jan-03	Nov-99	0.5 yrs	0.001	0	0.02	0.1	0.01	5.0E-4 yrs	4.9E-4 yrs	4.5E-4 yrs	4.5E-4 yrs
Eluant Conc.	0 yrs	Jan-03	Nov-99	3 yrs	0	0	0	0	0	0 yrs	0 yrs	0 yrs	0 yrs
FUNCTION SUBTOTAL										0.10 yrs	0.08 yrs	0.05 yrs	0.04 yrs
LLW VITRIFICATION													
Evap.	5 yrs	Jan-06	Jan-98	3 yrs	0	0	0	0	0	0 yrs	0 yrs	0 yrs	0 yrs
Melter	5 yrs	Jan-06	Jan-98	2 yrs	0.1	0	0.2	0.5	0.1	2.0E-1 yrs	1.6E-1 yrs	1.0E-1 yrs	8.0E-2 yrs
Quencher	5 yrs	Jan-06	Jan-98	1 yrs	0.01	0	0.02	0.1	0.01	1.0E-2 yrs	9.8E-3 yrs	9.0E-3 yrs	8.9E-3 yrs
Cul Drying	5 yrs	Jan-06	Jan-98	1 yrs	0.001	0	0.02	0.1	0.01	1.0E-3 yrs	9.8E-4 yrs	9.0E-4 yrs	8.9E-4 yrs
Cyclone	5 yrs	Jan-06	Jan-98	1 yrs	0.001	0	0.02	0.1	0.01	1.0E-3 yrs	9.8E-4 yrs	9.0E-4 yrs	8.9E-4 yrs
NOx/SO2	5 yrs	Jan-06	Jan-98	2 yrs	0.01	0	0.2	0.5	0.1	2.0E-2 yrs	1.6E-2 yrs	1.0E-2 yrs	8.0E-3 yrs
Claus React.	5 yrs	Jan-06	Jan-98	2 yrs	0.01	0	0.2	0.5	0.1	2.0E-2 yrs	1.6E-2 yrs	1.0E-2 yrs	8.0E-3 yrs
FUNCTION SUBTOTAL										0.25 yrs	0.20 yrs	0.13 yrs	0.11 yrs
HLW VITRIFICTION													
Centrifuge	5 yrs	Jan-06	Apr-03	1 yrs	0.01	0	0.02	0.1	0.01	1.0E-2 yrs	9.8E-3 yrs	9.0E-3 yrs	8.9E-3 yrs
Evap.	5 yrs	Jan-06	Apr-03	3 yrs	0	0	0	0	0	0 yrs	0 yrs	0 yrs	0 yrs
Melter	5 yrs	Jan-06	Apr-03	2 yrs	0.1	0	0.2	0.5	0.1	2.0E-1 yrs	1.6E-1 yrs	1.0E-1 yrs	8.0E-2 yrs
Quench	5 yrs	Jan-06	Apr-03	1 yrs	0.01	0	0.02	0.1	0.01	1.0E-2 yrs	9.8E-3 yrs	9.0E-3 yrs	8.9E-3 yrs
Vent Scrub	5 yrs	Jan-06	Apr-03	1 yrs	0.01	0	0.02	0.1	0.01	1.0E-2 yrs	9.8E-3 yrs	9.0E-3 yrs	8.9E-3 yrs
Demist	5 yrs	Jan-06	Apr-03	1 yrs	0.001	0	0.02	0.1	0.01	1.0E-3 yrs	9.8E-4 yrs	9.0E-4 yrs	8.9E-4 yrs
FUNCTION SUBTOTAL										0.23 yrs	0.19 yrs	0.13 yrs	0.11 yrs
TOTAL										1.39 yrs	1.20 yrs	1.11 yrs	0.98 yrs
TOTAL WITH DELAYS										1.39 yrs	1.20 yrs	8.51 yrs	8.38 yrs

Alternative1. Cost Impact Due to Schedule Risk	Estimated Annual % Loss of Productive Utilization of Retrieval staff during Equip. Replace.	Estimated Annual % Loss of Productive Utilization of Pretreatment staff during Equip. Replace.	Estimated Annual % Loss of Productive Utilization of LLWVIT staff during Equip. Replace.	Estimated Annual % Loss of Productive Utilization of HLWVIT staff during Equip. Replace.	Estimated Annual Utilization of Design Staff (full time equivalents)	Estimated Annual Utilization of Construction Staff (full time equivalents)	Estimated Replacement Equipment Capital Cost	Cost Risk for Design Support Testing - TPA Schedule	Cost Risk for Design & Operations Support Testing - TPA Schedule	Cost Risk for Design Support Testing - Delayed Schedule	Cost Risk for Design & Operations Support Testing - Delayed Schedule
	C1	C2	C3	C4	C5	C6	C7	C8	C9	C10	C11
Retrieval											
Sluice	0.2	0.05	0.05	0	71	500	$1.0E+9	$6.1E+8	$5.7E+8	$6.1E+8	$5.7E+8
Pretreatment											
Sludge Washing	0.9	1	0.9	0	179	441	$1.5E+8	$2.1E+6	$2.1E+6	$2.1E+6	$2.1E+6
Solids/Liquid Separation											
In-Tank Settle	0.9	1	0.9	0	36	294	$1.0E+8	$0	$0	$0	$0
Filtration	0.9	1	0.9	0	7	59	$1.0E+7	$9.3E+7	$7.5E+7	$4.7E+7	$3.7E+7
Cs IX											
Feed Evap.	0.9	1	0.9	0	8	69	$3.5E+7	$0	$0	$0	$0
IX	0.9	1	0.9	0	29	235	$2.0E+7	$4.9E+5	$4.8E+5	$4.4E+5	$4.4E+5
Eluant Conc.	0.9	1	0.9	0	8	69	$3.5E+7	$0	$0	$0	$0
FUNCTION SUBTOTAL					267	1167	$3.5E+8	$9.6E+7	$7.7E+7	$4.9E+7	$4.0E+7
LLW VITRIFICATION											
Evap.	0.9	1	0.9	0	8	69	$3.5E+7	$0	$0	$0	$0
Melter	0.9	1	0.9	0	321	1200	$9.0E+8	$3.0E+8	$2.4E+8	$1.5E+8	$1.2E+8
Quencher	0.9	1	0.9	0	21	176	$3.0E+7	$9.7E+6	$9.5E+6	$8.7E+6	$8.6E+6
Cul Drying	0.9	1	0.9	0	29	235	$4.0E+7	$9.8E+5	$9.6E+5	$8.8E+5	$8.7E+5
Cyclone	0.9	1	0.9	0	21	176	$3.0E+7	$9.7E+5	$9.5E+5	$8.7E+5	$8.6E+5
NOx/SO2	0.9	1	0.9	0	14	118	$4.0E+7	$1.9E+7	$1.5E+7	$9.5E+6	$7.6E+6
Claus React.	0.9	1	0.9	0	18	147	$5.0E+7	$1.9E+7	$1.5E+7	$9.6E+6	$7.7E+6
FUNCTION SUBTOTAL					433	2122	$1.1E+9	$3.5E+8	$2.8E+8	$1.8E+8	$1.5E+8
HLW VITRIFICATION											
Centrifuge	0.1	0.1	0.1	1	7	59	$1.0E+7	$7.2E+6	$7.1E+6	$6.5E+6	$6.4E+6
Evap.	0.1	0.1	0.1	1	8	69	$3.5E+7	$0	$0	$0	$0
Melter	0.1	0.1	0.1	1	321	1200	$9.0E+8	$2.6E+8	$2.1E+8	$1.3E+8	$1.0E+8
Quench	0.1	0.1	0.1	1	21	176	$3.0E+7	$7.5E+6	$7.4E+6	$6.8E+6	$6.7E+6
Vent Scrub	0.1	0.1	0.1	1	29	235	$4.0E+7	$7.7E+6	$7.6E+6	$6.9E+6	$6.9E+6
Demist	0.1	0.1	0.1	1	21	176	$3.0E+7	$7.5E+5	$7.4E+5	$6.8E+5	$6.7E+5
FUNCTION SUBTOTAL					408	1916	$1.0E+9	$2.8E+8	$2.3E+8	$1.5E+8	$1.2E+8
TOTAL					1180	5704	$3.5E+9	$1.34E+9	$1.16E+9	$9.90E+8	$8.80E+8
TOTAL WITH DELAYS								$1.34E+9	$1.16E+9	$3.95E+9	$3.84E+9

Alternative 1. Worker Risk Impact Due to Schedule Risk	Worker Risk Attributed to Schedule Risk For Support of Design - TPA Schedule	Worker Risk Attributed to Schedule Risk for Support of Design & Operations - TPA Schedule	Worker Risk Attributed to Schedule Risk for Support of Design - Delayed Schedule	Worker Risk Attributed to Schedule Risk for Support of Design & Operations - Delayed Schedule	Worker Risk Attributed to Schedule Risk For Support of Design - TPA Schedule	Worker Risk Attributed to Schedule Risk for Support of Design & Operations - TPA Schedule	Worker Risk Attributed to Schedule Risk for Support of Design - Delayed Schedule	Worker Risk Attributed to Schedule Risk for Support of Design & Operations - Delayed Schedule	Worker Risk Attributed to Schedule Risk For Support of Design - TPA Schedule	Worker Risk Attributed to Schedule Risk for Support of Design & Operations - TPA Schedule	Worker Risk Attributed to Schedule Risk for Support of Design - Delayed Schedule	Worker Risk Attributed to Schedule Risk for Support of Design & Operations - Delayed Schedule	Worker Risk Attributed to Schedule Risk For Support of Design - TPA Schedule	Worker Risk Attributed to Schedule Risk for Support of Design & Operations - TPA Schedule	Worker Risk Attributed to Schedule Risk for Support of Design - Delayed Schedule	Worker Risk Attributed to Schedule Risk for Support of Design & Operations - Delayed Schedule	Worker Risk Attributed to Schedule Risk For Support of Design - TPA Schedule	Worker Risk Attributed to Schedule Risk for Support of Design & Operations - TPA Schedule	Worker Risk Attributed to Schedule Risk for Support of Design - Delayed Schedule	Worker Risk Attributed to Schedule Risk for Support of Design & Operations - Delayed Schedule
	Industrial Injury Risk				Industrial Death Risk				Transportation Injury Risk				Transportation Death Risk				Radiation Exposure Risk			
Retrieval																				
Sluice	131	117	131	117	0.288	0.259	0.288	0.259	0.446	0.402	0.446	0.402	0.220	0.198	0.220	0.198	0.132	0.119	0.132	0.119
Pretreatment																				
Sludge Washing	0.544	0.544	0.543	0.543	0.001	0.001	0.001	0.001	0.002	0.002	0.002	0.002	0.001	0.001	0.001	0.001	0.001	0.001	0.001	0.001
Solids/Liquid Separation																				
In-Tank Sett	0.000	0.000	0.000	0.000	0.000	0.000	0.000	0.000	0.000	0.000	0.000	0.000	0.000	0.000	0.000	0.000	0.000	0.000	0.000	0.000
Filtration	22.898	18.319	11.449	9.159	0.039	0.031	0.019	0.015	0.092	0.074	0.046	0.037	0.045	0.036	0.023	0.018	0.022	0.017	0.011	0.009
Cs IX																				
Feed Evap.	0.000	0.000	0.000	0.000	0.000	0.000	0.000	0.000	0.000	0.000	0.000	0.000	0.000	0.000	0.000	0.000	0.000	0.000	0.000	0.000
IX	0.124	0.121	0.111	0.110	0.000	0.000	0.000	0.000	0.000	0.000	0.000	0.000	0.000	0.000	0.000	0.000	0.000	0.000	0.000	0.000
Eluant Conc	0.000	0.000	0.000	0.000	0.000	0.000	0.000	0.000	0.000	0.000	0.000	0.000	0.000	0.000	0.000	0.000	0.000	0.000	0.000	0.000
FUNCTION SUBTOTAL	23.57	18.98	12.10	9.81	0.040	0.032	0.021	0.017	0.095	0.076	0.049	0.039	0.047	0.037	0.024	0.019	0.022	0.018	0.012	0.009
LLW VITRIFICATION																				
Evap.	0.00	0.00	0.00	0.00	0.000	0.000	0.000	0.000	0.000	0.000	0.000	0.000	0.000	0.000	0.000	0.000	0.000	0.000	0.000	0.000
Melter	70.38	56.30	35.19	28.15	0.160	0.128	0.080	0.064	0.237	0.190	0.118	0.095	0.117	0.094	0.059	0.047	0.066	0.053	0.033	0.027
Quencher	2.41	2.36	2.17	2.15	0.004	0.004	0.004	0.004	0.009	0.009	0.009	0.008	0.005	0.005	0.004	0.004	0.002	0.002	0.002	0.002
Cul Drying	0.25	0.24	0.22	0.22	0.000	0.000	0.000	0.000	0.001	0.001	0.001	0.001	0.000	0.000	0.000	0.000	0.000	0.000	0.000	0.000
Cyclone	0.24	0.24	0.22	0.21	0.000	0.000	0.000	0.000	0.001	0.001	0.001	0.001	0.000	0.000	0.000	0.000	0.000	0.000	0.000	0.000
NOx/SO2	4.70	3.76	2.35	1.88	0.008	0.007	0.004	0.003	0.019	0.015	0.009	0.007	0.009	0.007	0.005	0.004	0.004	0.004	0.002	0.002
Claus React.	4.76	3.81	2.38	1.90	0.008	0.007	0.004	0.003	0.019	0.015	0.009	0.008	0.009	0.007	0.005	0.004	0.005	0.004	0.002	0.002
FUNCTION SUBTOTAL	82.7	66.7	42.5	34.5	0.182	0.146	0.093	0.075	0.288	0.231	0.147	0.120	0.141	0.114	0.073	0.059	0.078	0.063	0.040	0.033
HLW VITRIFICATION																				
Centrifuge	1.67	1.63	1.50	1.48	0.002	0.002	0.002	0.002	0.007	0.007	0.006	0.006	0.003	0.003	0.003	0.003	0.002	0.002	0.002	0.002
Evap.	0.00	0.00	0.00	0.00	0.000	0.000	0.000	0.000	0.000	0.000	0.000	0.000	0.000	0.000	0.000	0.000	0.000	0.000	0.000	0.000
Melter	57.92	46.34	28.96	23.17	0.133	0.106	0.066	0.053	0.192	0.154	0.096	0.077	0.095	0.076	0.048	0.038	0.065	0.052	0.033	0.026
Quench	1.79	1.75	1.61	1.59	0.003	0.003	0.003	0.003	0.007	0.007	0.007	0.006	0.004	0.003	0.003	0.003	0.002	0.002	0.002	0.002
Vent Scrub	1.85	1.81	1.66	1.65	0.003	0.003	0.003	0.003	0.007	0.007	0.007	0.007	0.004	0.004	0.003	0.003	0.002	0.002	0.002	0.002
Demist	0.18	0.18	0.16	0.16	0.000	0.000	0.000	0.000	0.001	0.001	0.001	0.001	0.000	0.000	0.000	0.000	0.000	0.000	0.000	0.000
FUNCTION SUBTOTAL	63.4	51.7	33.9	28.1	0.141	0.115	0.074	0.061	0.215	0.176	0.116	0.097	0.106	0.087	0.057	0.048	0.072	0.059	0.039	0.032
TOTAL	300	255	219	190	0.65	0.55	0.48	0.41	1.04	0.88	0.76	0.66	0.51	0.44	0.37	0.32	0.30	0.26	0.22	0.19
TOTAL WITH DELAYS	300	255	921	892	0.65	0.55	1.57	1.50	1.04	0.88	3.67	3.57	0.51	0.44	1.80	1.75	0.30	0.26	0.89	0.96

Alternative 2, Schedule Risk	Estimated Years of Alt 1,2,or 3 Testing to Delayed Design Benefit	Estimated Earliest Date of Alt 1, 2, or 3 Hot Pilot Plant Testing Startup	Date of TWRS Tnte II Design Completion Minus 1 Year	Estimated TWRS Equipment Replacement Time	Replacement probability If No Testing Beyond Alt. 4	Probability that Alt 1,2 or 3 testing will identify risk reducing design change - TPA Schedule	Added Probability Alt 1,2 or 3 testing will reduce Startup/Ops schedule risk - TPA Schedule	Probability That Alt. 1,2 or 3 testing will identify risk reducing design change - Delayed Schedule	Added Probability that Alt 1,2 or 3 testing will reduce Startup/Ops schedule risk - Delayed Sch.	Schedule Extension for Testing to Support Design - TPA Schedule	Schedule Extension for Testing to Support Design & Operations - TPA Schedule	Schedule Extension for Testing to Support Design - Delayed Schedule	Schedule Extension for Testing to Support Design & Operations - Delayed Schedule
	S1	S2	S3	S4	S5	S6	S7	S8	S9	S10	S11	S12	S13
Retrieval													
Sluice				4 yrs	0.2	0	0	0	0	8.0E-1 yrs	7.2E-1 yrs	8.0E-1 yrs	7.2E-1 yrs
Pretreatment													
Sludge Washing	4 yrs	Jan-07	Nov-99	2 yrs	0.001	0	0	0	0	2.0E-3 yrs	2.0E-3 yrs	2.0E-3 yrs	2.0E-3 yrs
Solids/Liquid Separation													
In-Tank Settle	0 yrs	Jan-07	Nov-99	2 yrs	0	0	0	0	0	0 yrs	0 yrs	0 yrs	0 yrs
Filtration	2 yrs	Jan-07	Nov-99	1 yrs	0.1	0	0.2	0.55	0.1	1.0E-1 yrs	8.0E-2 yrs	4.5E-2 yrs	3.5E-2 yrs
Cs IX													
Feed Evap.	0 yrs	Jan-07	Nov-99	3 yrs	0	0	0	0	0	0 yrs	0 yrs	0 yrs	0 yrs
IX	2 yrs	Jan-07	Nov-99	0.5 yrs	0.001	0	0.02	0.11	0.01	5.0E-4 yrs	4.9E-4 yrs	4.5E-4 yrs	4.4E-4 yrs
Eluant Conc.	0 yrs	Jan-07	Nov-99	3 yrs	0	0	0	0	0	0 yrs	0 yrs	0 yrs	0 yrs
FUNCTION SUBTOTAL										0.10 yrs	0.08 yrs	0.05 yrs	0.04 yrs
LLW VITRIFICATION													
Evap.				3 yrs	0	0	0	0	0	0 yrs	0 yrs	0 yrs	0 yrs
Melter				2 yrs	0.1	0	0	0	0	2.0E-1 yrs	1.8E-1 yrs	2.0E-1 yrs	1.8E-1 yrs
Quencher				1 yrs	0.01	0	0	0	0	1.0E-2 yrs	9.0E-3 yrs	1.0E-2 yrs	9.0E-3 yrs
Cul Drying				1 yrs	0.001	0	0	0	0	1.0E-3 yrs	9.0E-4 yrs	1.0E-3 yrs	9.0E-4 yrs
Cyclone				1 yrs	0.001	0	0	0	0	1.0E-3 yrs	9.0E-4 yrs	1.0E-3 yrs	9.0E-4 yrs
NOx/SO2				2 yrs	0.01	0	0	0	0	2.0E-2 yrs	1.8E-2 yrs	2.0E-2 yrs	1.8E-2 yrs
Claus React.				2 yrs	0.01	0	0	0	0	2.0E-2 yrs	1.8E-2 yrs	2.0E-2 yrs	1.8E-2 yrs
FUNCTION SUBTOTAL										0.25 yrs	0.23 yrs	0.25 yrs	0.23 yrs
HLW VITRIFICATION													
Centrifuge	5 yrs	Jan-07	Apr-03	1 yrs	0.01	0	0.02	0.11	0.01	1.0E-2 yrs	9.8E-3 yrs	8.9E-3 yrs	8.8E-3 yrs
Evap.	5 yrs	Jan-07	Apr-03	3 yrs	0	0	0	0	0	0 yrs	0 yrs	0 yrs	0 yrs
Melter	5 yrs	Jan-07	Apr-03	2 yrs	0.1	0	0.2	0.55	0.1	2.0E-1 yrs	1.6E-1 yrs	9.0E-2 yrs	7.0E-2 yrs
Quench	5 yrs	Jan-07	Apr-03	1 yrs	0.01	0	0.02	0.11	0.01	1.0E-2 yrs	9.8E-3 yrs	8.9E-3 yrs	8.8E-3 yrs
Vent Scrub	5 yrs	Jan-07	Apr-03	1 yrs	0.01	0	0.02	0.11	0.01	1.0E-2 yrs	9.8E-3 yrs	8.9E-3 yrs	8.8E-3 yrs
Demist	5 yrs	Jan-07	Apr-03	1 yrs	0.001	0	0.02	0.11	0.01	1.0E-3 yrs	9.8E-4 yrs	8.9E-4 yrs	8.8E-4 yrs
FUNCTION SUBTOTAL										0.23 yrs	0.19 yrs	0.12 yrs	0.10 yrs
TOTAL										1.39 yrs	1.22 yrs	1.22 yrs	1.08 yrs
TOTAL WITH DELAYS										1.39 yrs	1.22 yrs	9.62 yrs	9.48 yrs

Alternative 2. Cost Impact Due to Schedule Risk	Estimated Annual % Loss of Productive Utilization of Retrieval staff during Equip. Replace.	Estimated Annual % Loss of Productive Utilization of Pretreatment staff during Equip. Replace.	Estimated Annual % Loss of Productive Utilization of LLWVIT staff during Equip. Replace.	Estimated Annual % Loss of Productive Utilization of HLWVIT staff during Equip. Replace.	Estimated Annual Utilization of Design Staff (full time equivalents)	Estimated Annual Utilization of Construction Staff (full time equivalents)	Estimated Replacement Equipment Capital Cost	Cost Risk for Design Support Testing - TPA Schedule	Cost Risk for Design & Operations Support Testing - TPA Schedule	Cost Risk for Design Support Testing - Delayed Schedule	Cost Risk for Design & Operations Support Testing - Delayed Schedule
	C1	C2	C3	C4	C5	C6	C7	C8	C9	C10	C11
Retrieval											
Sluice	0.2	0.05	0.05	0	71	500	$1.0E+9	$6.1E+8	$5.7E+8	$6.1E+8	$5.7E+8
Pretreatment											
Sludge Washing	0.9	1	0.9	0	179	441	$1.5E+8	$2.1E+6	$2.1E+6	$2.1E+6	$2.1E+6
Solids/Liquid Separation											
In-Tank Settle	0.9	1	0.9	0	36	294	$1.0E+8	$0	$0	$0	$0
Filtration	0.9	1	0.9	0	7	59	$1.0E+7	$9.3E+7	$7.5E+7	$4.2E+7	$3.3E+7
Cs IX											
Feed Evap.	0.9	1	0.9	0	8	69	$3.5E+7	$0	$0	$0	$0
IX	0.9	1	0.9	0	29	235	$2.0E+7	$4.9E+5	$4.8E+5	$4.4E+5	$4.3E+5
Eluant Conc.	0.9	1	0.9	0	8	69	$3.5E+7	$0	$0	$0	$0
FUNCTION SUBTOTAL					267	1167	$3.5E+8	$9.6E+7	$7.7E+7	$4.5E+7	$3.5E+7
LLW VITRIFICATION											
Evap.	0.9	1	0.9	0	8	69	$3.5E+7	$0	$0	$0	$0
Melter	0.9	1	0.9	0	321	1200	$9.0E+8	$3.0E+8	$2.8E+8	$3.0E+8	$2.8E+8
Quencher	0.9	1	0.9	0	21	176	$3.0E+7	$9.7E+6	$8.7E+6	$9.7E+6	$8.7E+6
Cul Drying	0.9	1	0.9	0	29	235	$4.0E+7	$9.8E+5	$8.9E+5	$9.8E+5	$8.9E+5
Cyclone	0.9	1	0.9	0	21	176	$3.0E+7	$9.7E+5	$8.7E+5	$9.7E+5	$8.7E+5
NOx/SO2	0.9	1	0.9	0	14	118	$4.0E+7	$1.9E+7	$1.7E+7	$1.9E+7	$1.7E+7
Claus React.	0.9	1	0.9	0	18	147	$5.0E+7	$1.9E+7	$1.7E+7	$1.9E+7	$1.7E+7
FUNCTION SUBTOTAL					433	2122	$1.1E+9	$3.5E+8	$3.3E+8	$3.5E+8	$3.3E+8
HLW VITRIFICATION											
Centrifuge	0.1	0.1	0.1	1	7	59	$1.0E+7	$7.2E+6	$7.1E+6	$6.4E+6	$6.4E+6
Evap.	0.1	0.1	0.1	1	8	69	$3.5E+7	$0	$0	$0	$0
Melter	0.1	0.1	0.1	1	321	1200	$9.0E+8	$2.6E+8	$2.1E+8	$1.2E+8	$9.1E+7
Quench	0.1	0.1	0.1	1	21	176	$3.0E+7	$7.5E+6	$7.4E+6	$6.7E+6	$6.6E+6
Vent Scrub	0.1	0.1	0.1	1	29	235	$4.0E+7	$7.7E+6	$7.6E+6	$6.9E+6	$6.8E+6
Demist	0.1	0.1	0.1	1	21	176	$3.0E+7	$7.5E+5	$7.4E+5	$6.7E+5	$6.6E+5
FUNCTION SUBTOTAL					408	1916	$1.0E+9	$2.8E+8	$2.3E+8	$1.4E+8	$1.1E+8
TOTAL					1180	5704	$3.5E+9	$1.34E+9	$1.20E+9	$1.14E+9	$1.04E+9
TOTAL WITH DELAYS								$1.34E+9	$1.20E+9	$4.50E+9	$4.40E+9

Alternative 2.
Worker Risk Impact Due to Schedule Risk

	Industrial Injury Risk				Industrial Death Risk				Transportation Injury Risk				Transportation Death Risk				Radiation Exposure Risk			
	Worker Risk Attributed to Schedule Risk For Support of Design - TPA Schedule	Worker Risk Attributed to Schedule Risk for Support of Design & Operations - TPA Schedule	Worker Risk Attributed to Schedule Risk for Support of Design - Delayed Schedule	Worker Risk Attributed to Schedule Risk for Support of Design & Operations - Delayed Schedule	Worker Risk Attributed to Schedule Risk For Support of Design - TPA Schedule	Worker Risk Attributed to Schedule Risk for Support of Design & Operations - TPA Schedule	Worker Risk Attributed to Schedule Risk for Support of Design - Delayed Schedule	Worker Risk Attributed to Schedule Risk for Support of Design & Operations - Delayed Schedule	Worker Risk Attributed to Schedule Risk For Support of Design - TPA Schedule	Worker Risk Attributed to Schedule Risk for Support of Design & Operations - TPA Schedule	Worker Risk Attributed to Schedule Risk for Support of Design - Delayed Schedule	Worker Risk Attributed to Schedule Risk for Support of Design & Operations - Delayed Schedule	Worker Risk Attributed to Schedule Risk For Support of Design - TPA Schedule	Worker Risk Attributed to Schedule Risk for Support of Design & Operations - TPA Schedule	Worker Risk Attributed to Schedule Risk for Support of Design - Delayed Schedule	Worker Risk Attributed to Schedule Risk for Support of Design & Operations - Delayed Schedule	Worker Risk Attributed to Schedule Risk For Support of Design - TPA Schedule	Worker Risk Attributed to Schedule Risk for Support of Design & Operations - TPA Schedule	Worker Risk Attributed to Schedule Risk for Support of Design - Delayed Schedule	Worker Risk Attributed to Schedule Risk for Support of Design & Operations - Delayed Schedule
Retrieval																				
Sluice	130.542	117.488	130.542	117.488	0.288	0.259	0.288	0.259	0.446	0.402	0.446	0.402	0.220	0.198	0.220	0.198	0.132	0.119	0.132	0.119
Pretreatment																				
Sludge Washing	0.544	0.544	0.543	0.543	0.001	0.001	0.001	0.001	0.002	0.002	0.002	0.002	0.001	0.001	0.001	0.001	0.001	0.001	0.001	0.001
Solids/Liquid Separation																				
In-Tank Solt	0.000	0.000	0.000	0.000	0.000	0.000	0.000	0.000	0.000	0.000	0.000	0.000	0.000	0.000	0.000	0.000	0.000	0.000	0.000	0.000
Filtration	22.898	18.319	10.304	8.014	0.039	0.031	0.017	0.014	0.092	0.074	0.042	0.032	0.045	0.036	0.020	0.016	0.022	0.017	0.010	0.008
Cs IX																				
Feed Evap.	0.000	0.000	0.000	0.000	0.000	0.000	0.000	0.000	0.000	0.000	0.000	0.000	0.000	0.000	0.000	0.000	0.000	0.000	0.000	0.000
IX	0.124	0.121	0.110	0.109	0.000	0.000	0.000	0.000	0.000	0.000	0.000	0.000	0.000	0.000	0.000	0.000	0.000	0.000	0.000	0.000
Eluent Conc	0.000	0.000	0.000	0.000	0.000	0.000	0.000	0.000	0.000	0.000	0.000	0.000	0.000	0.000	0.000	0.000	0.000	0.000	0.000	0.000
FUNCTION SUBTOTAL	23.57	18.98	10.96	8.67	0.040	0.032	0.019	0.015	0.095	0.076	0.044	0.035	0.047	0.037	0.022	0.017	0.022	0.018	0.010	0.008
LLW VITRIFICATION																				
Evap.	0.00	0.00	0.00	0.00	0.000	0.000	0.000	0.000	0.000	0.000	0.000	0.000	0.000	0.000	0.000	0.000	0.000	0.000	0.000	0.000
Melter	70.38	63.34	70.38	63.34	0.160	0.144	0.160	0.144	0.237	0.213	0.237	0.213	0.117	0.105	0.117	0.105	0.066	0.060	0.066	0.060
Quencher	2.41	2.17	2.41	2.17	0.004	0.004	0.004	0.004	0.009	0.009	0.009	0.009	0.005	0.004	0.005	0.004	0.002	0.002	0.002	0.002
Cut Drying	0.25	0.22	0.25	0.22	0.000	0.000	0.000	0.000	0.001	0.001	0.001	0.001	0.000	0.000	0.000	0.000	0.000	0.000	0.000	0.000
Cyclone	0.24	0.22	0.24	0.22	0.000	0.000	0.000	0.000	0.001	0.001	0.001	0.001	0.000	0.000	0.000	0.000	0.000	0.000	0.000	0.000
NOx/SO2	4.70	4.23	4.70	4.23	0.008	0.007	0.008	0.007	0.019	0.017	0.019	0.017	0.009	0.008	0.009	0.008	0.004	0.004	0.004	0.004
Claus React.	4.76	4.29	4.76	4.29	0.008	0.008	0.008	0.008	0.019	0.017	0.019	0.017	0.009	0.008	0.009	0.008	0.005	0.004	0.005	0.004
FUNCTION SUBTOTAL	82.7	74.5	82.7	74.5	0.182	0.164	0.182	0.164	0.286	0.257	0.286	0.257	0.141	0.127	0.141	0.127	0.078	0.070	0.078	0.070
HLW VITRIFICATION																				
Centrifuge	1.67	1.63	1.48	1.47	0.002	0.002	0.002	0.002	0.007	0.007	0.006	0.006	0.003	0.003	0.003	0.003	0.002	0.002	0.002	0.002
Evap.	0.00	0.00	0.00	0.00	0.000	0.000	0.000	0.000	0.000	0.000	0.000	0.000	0.000	0.000	0.000	0.000	0.000	0.000	0.000	0.000
Melter	57.92	46.34	26.07	20.27	0.133	0.106	0.060	0.046	0.192	0.154	0.087	0.067	0.095	0.076	0.043	0.033	0.065	0.052	0.029	0.023
Quench	1.79	1.75	1.59	1.57	0.003	0.003	0.003	0.003	0.007	0.007	0.006	0.006	0.004	0.003	0.003	0.003	0.002	0.002	0.002	0.002
Vent Scrub	1.85	1.81	1.65	1.63	0.003	0.003	0.003	0.003	0.007	0.007	0.007	0.006	0.004	0.004	0.003	0.003	0.002	0.002	0.002	0.002
Demist	0.18	0.18	0.16	0.16	0.000	0.000	0.000	0.000	0.001	0.001	0.001	0.001	0.000	0.000	0.000	0.000	0.000	0.000	0.000	0.000
FUNCTION SUBTOTAL	63.4	51.7	30.9	25.1	0.141	0.115	0.068	0.054	0.215	0.176	0.106	0.087	0.106	0.087	0.053	0.043	0.072	0.059	0.036	0.029
TOTAL	300	263	255	226	0.65	0.57	0.56	0.49	1.04	0.91	0.88	0.78	0.51	0.45	0.44	0.39	0.30	0.27	0.26	0.23
TOTAL WITH DELAYS	300	263	1052	1022	0.65	0.57	1.80	1.73	1.04	0.91	4.19	4.09	0.51	0.45	2.06	2.01	0.30	0.27	1.13	1.10

Alternative 3. Schedule Risk	Estimated Years of Alt 1,2,or 3 Testing to Delayed Design Benefit	Estimated Earliest Date of Alt 1, 2, or 3 Hot Pilot Plant Testing Startup	Date of TWRS Title II Design Completion Minus 1 Year	Estimated TWRS Equipment Replacement Time	Replacement probability if No Testing Beyond Alt. 4	Probability that Alt 1,2 or 3 testing will identify risk reducing design change - TPA Schedule	Added Probability Alt 1,2 or 3 testing will reduce Startup/Ops schedule risk - TPA Schedule	Probability That Alt. 1,2 or 3 testing will identify risk reducing design change - Delayed Schedule	Added Probability that Alt 1,2 or 3 testing will reduce Startup/Ops schedule risk - Delayed Sch.	Schedule Extension for Testing to Support Design - TPA Schedule	Schedule Extension for Testing to Support Design & Operations - TPA Schedule	Schedule Extension for Testing to Support Design - Delayed Schedule	Schedule Extension for Testing to Support Design & Operations - Delayed Schedule
	S1	S2	S3	S4	S5	S6	S7	S8	S9	S10	S11	S12	S13
Retrieval													
Sluice				4 yrs	0.2	0	0	0	0	8.0E-1 yrs	7.2E-1 yrs	8.0E-1 yrs	7.2E-1 yrs
Pretreatment													
Sludge Washing	4 yrs	Jan-00	Nov-99	2 yrs	0.001	0	0	0.001	0	2.0E-3 yrs	2.0E-3 yrs	2.0E-3 yrs	2.0E-3 yrs
Solids/Liquid Separation													
In-Tank Settle	0 yrs	Jan-00	Nov-99	2 yrs	0	0	0	0	0	0 yrs	0 yrs	0 yrs	0 yrs
Filtration	2 yrs	Jan-00	Nov-99	1 yrs	0.1	0	0.2	0.5	0.1	1.0E-1 yrs	8.0E-2 yrs	5.0E-2 yrs	4.0E-2 yrs
Cs IX													
Feed Evap.	0 yrs	Jan-00	Nov-99	3 yrs	0	0	0	0	0	0 yrs	0 yrs	0 yrs	0 yrs
IX	2 yrs	Jan-00	Nov-99	0.5 yrs	0.001	0	0.02	0.1	0.01	5.0E-4 yrs	4.9E-4 yrs	4.5E-4 yrs	4.5E-4 yrs
Eluant Conc.	0 yrs	Jan-00	Nov-99	3 yrs	0	0	0	0	0	0 yrs	0 yrs	0 yrs	0 yrs
FUNCTION SUBTOTAL										0.10 yrs	0.08 yrs	0.05 yrs	0.04 yrs
LLW VIT													
Evap.				3 yrs	0	0	0	0	0	0 yrs	0 yrs	0 yrs	0 yrs
Melter				2 yrs	0.1	0	0	0	0	2.0E-1 yrs	1.8E-1 yrs	2.0E-1 yrs	1.8E-1 yrs
Quencher				1 yrs	0.01	0	0	0	0	1.0E-2 yrs	9.0E-3 yrs	1.0E-2 yrs	9.0E-3 yrs
Cul Drying				1 yrs	0.001	0	0	0	0	1.0E-3 yrs	9.0E-4 yrs	1.0E-3 yrs	9.0E-4 yrs
Cyclone				1 yrs	0.001	0	0	0	0	1.0E-3 yrs	9.0E-4 yrs	1.0E-3 yrs	9.0E-4 yrs
NOx/SO2				2 yrs	0.01	0	0	0	0	2.0E-2 yrs	1.8E-2 yrs	2.0E-2 yrs	1.8E-2 yrs
Claus React.				2 yrs	0.01	0	0	0	0	2.0E-2 yrs	1.8E-2 yrs	2.0E-2 yrs	1.8E-2 yrs
FUNCTION SUBTOTAL										0.25 yrs	0.23 yrs	0.25 yrs	0.23 yrs
HLW VIT													
Centrifuge	5 yrs	Jan-04	Apr-03	1 yrs	0.01	0	0.02	0.1	0.01	1.0E-2 yrs	9.8E-3 yrs	9.0E-3 yrs	8.9E-3 yrs
Evap.	5 yrs	Jan-04	Apr-03	3 yrs	0	0	0	0	0	0 yrs	0 yrs	0 yrs	0 yrs
Melter	5 yrs	Jan-04	Apr-03	2 yrs	0.1	0	0.2	0.5	0.1	2.0E-1 yrs	1.6E-1 yrs	1.0E-1 yrs	8.0E-2 yrs
Quench	5 yrs	Jan-04	Apr-03	1 yrs	0.01	0	0.02	0.1	0.01	1.0E-2 yrs	9.8E-3 yrs	9.0E-3 yrs	8.9E-3 yrs
Vent Scrub	5 yrs	Jan-04	Apr-03	1 yrs	0.01	0	0.02	0.1	0.01	1.0E-2 yrs	9.8E-3 yrs	9.0E-3 yrs	8.9E-3 yrs
Demist	5 yrs	Jan-04	Apr-03	1 yrs	0.001	0	0.02	0.1	0.01	1.0E-3 yrs	9.8E-4 yrs	9.0E-4 yrs	8.9E-4 yrs
FUNCTION SUBTOTAL										0.23 yrs	0.19 yrs	0.13 yrs	0.11 yrs
TOTAL										1.39 yrs	1.22 yrs	1.23 yrs	1.10 yrs
TOTAL WITH DELAYS										1.39 yrs	1.22 yrs	6.63 yrs	6.50 yrs

Alternative 3. Cost Impact Due to Schedule Risk	Estimated Annual % Loss of Productive Utilization of Retrieval staff during Equip. Replace.	Estimated Annual % Loss of Productive Utilization of Pretreatment staff during Equip. Replace.	Estimated Annual % Loss of Productive Utilization of LLWVIT staff during Equip. Replace.	Estimated Annual % Loss of Productive Utilization of HLWVIT staff during Equip. Replace.	Estimated Annual Utilization of Design Staff (full time equivalents)	Estimated Annual Utilization of Construction Staff (full time equivalents)	Estimated Replacement Equipment Capital Cost	Cost Risk for Design Support Testing - TPA Schedule	Cost Risk for Design & Operations Support Testing - TPA Schedule	Cost Risk for Design Support Testing - Delayed Schedule	Cost Risk for Design & Operations Support Testing - Delayed Schedule
	C1	C2	C3	C4	C5	C6	C7	C8	C9	C10	C11
Retrieval											
Sluice	0.2	0.05	0.05	0	71	500	$1.0E+9	$6.1E+8	$5.7E+8	$6.1E+8	$5.7E+8
Pretreatment											
Sludge Washing	0.9	1	0.9	0	179	441	$1.5E+8	$2.1E+6	$2.1E+6	$2.1E+6	$2.1E+6
Solids/Liquid Separation											
In-Tank Settle	0.9	1	0.9	0	36	294	$1.0E+8	$0	$0	$0	$0
Filtration	0.9	1	0.9	0	7	59	$1.0E+7	$9.3E+7	$7.5E+7	$4.7E+7	$3.7E+7
Cs IX											
Feed Evap.	0.9	1	0.9	0	8	69	$3.5E+7	$0	$0	$0	$0
IX	0.9	1	0.9	0	29	235	$2.0E+7	$4.9E+5	$4.8E+5	$4.4E+5	$4.4E+5
Eluant Conc.	0.9	1	0.9	0	8	69	$3.5E+7	$0	$0	$0	$0
FUNCTION SUBTOTAL					267	1167	$3.5E+8	$9.6E+7	$7.7E+7	$4.9E+7	$4.0E+7
LLW VIT											
Evap.	0.9	1	0.9	0	8	69	$3.5E+7	$0	$0	$0	$0
Melter	0.9	1	0.9	0	321	1200	$9.0E+8	$3.0E+8	$2.8E+8	$3.0E+8	$2.8E+8
Quencher	0.9	1	0.9	0	21	176	$3.0E+7	$9.7E+6	$8.7E+6	$9.7E+6	$8.7E+6
Cul Drying	0.9	1	0.9	0	29	235	$4.0E+7	$9.8E+5	$8.9E+5	$9.8E+5	$8.9E+5
Cyclone	0.9	1	0.9	0	21	176	$3.0E+7	$9.7E+5	$8.7E+5	$9.7E+5	$8.7E+5
NOx/SO2	0.9	1	0.9	0	14	118	$4.0E+7	$1.9E+7	$1.7E+7	$1.9E+7	$1.7E+7
Claus React.	0.9	1	0.9	0	18	147	$5.0E+7	$1.9E+7	$1.7E+7	$1.9E+7	$1.7E+7
FUNCTION SUBTOTAL					433	2122	$1.1E+9	$3.5E+8	$3.3E+8	$3.5E+8	$3.3E+8
HLW VIT											
Centrifuge	0.1	0.1	0.1	1	7	59	$1.0E+7	$7.2E+6	$7.1E+6	$6.5E+6	$6.4E+6
Evap.	0.1	0.1	0.1	1	8	69	$3.5E+7	$0	$0	$0	$0
Melter	0.1	0.1	0.1	1	321	1200	$9.0E+8	$2.6E+8	$2.1E+8	$1.3E+8	$1.0E+8
Quench	0.1	0.1	0.1	1	21	176	$3.0E+7	$7.5E+6	$7.4E+6	$6.8E+6	$6.7E+6
Vent Scrub	0.1	0.1	0.1	1	29	235	$4.0E+7	$7.7E+6	$7.6E+6	$6.9E+6	$6.9E+6
Demist	0.1	0.1	0.1	1	21	176	$3.0E+7	$7.5E+5	$7.4E+5	$6.8E+5	$6.7E+5
FUNCTION SUBTOTAL					408	1916	$1.0E+9	$2.8E+8	$2.3E+8	$1.5E+8	$1.2E+8
TOTAL					1180	5704	$3.5E+9	$1.34E+9	$1.20E+9	$1.16E+9	$1.06E+9
TOTAL WITH DELAYS								$1.34E+9	$1.20E+9	$3.32E+9	$3.22E+9

Alternative 3. Worker Risk Impact Due to Schedule Risk	Worker Risk Attributed to Schedule Risk For Support of Design - TPA Schedule	Worker Risk Attributed to Schedule Risk for Support of Design & Operations - TPA Schedule	Worker Risk Attributed to Schedule Risk for Support of Design - Delayed Schedule	Worker Risk Attributed to Schedule Risk for Support of Design & Operations - Delayed Schedule	Worker Risk Attributed to Schedule Risk For Support of Design - TPA Schedule	Worker Risk Attributed to Schedule Risk for Support of Design & Operations - TPA Schedule	Worker Risk Attributed to Schedule Risk for Support of Design - Delayed Schedule	Worker Risk Attributed to Schedule Risk for Support of Design & Operations - Delayed Schedule	Worker Risk Attributed to Schedule Risk For Support of Design - TPA Schedule	Worker Risk Attributed to Schedule Risk for Support of Design & Operations - TPA Schedule	Worker Risk Attributed to Schedule Risk for Support of Design - Delayed Schedule	Worker Risk Attributed to Schedule Risk for Support of Design & Operations - Delayed Schedule	Worker Risk Attributed to Schedule Risk For Support of Design - TPA Schedule	Worker Risk Attributed to Schedule Risk for Support of Design & Operations - TPA Schedule	Worker Risk Attributed to Schedule Risk for Support of Design - Delayed Schedule	Worker Risk Attributed to Schedule Risk for Support of Design & Operations - Delayed Schedule	Worker Risk Attributed to Schedule Risk For Support of Design - TPA Schedule	Worker Risk Attributed to Schedule Risk for Support of Design & Operations - TPA Schedule	Worker Risk Attributed to Schedule Risk for Support of Design - Delayed Schedule	Worker Risk Attributed to Schedule Risk for Support of Design & Operations - Delayed Schedule
	Industrial Injury Risk				Industrial Death Risk				Transportation Injury Risk				Transportation Death Risk				Radiation Exposure Risk			
Retrieval																				
Sluice	131	117	131	117	0.268	0.259	0.268	0.259	0.446	0.402	0.446	0.402	0.220	0.198	0.220	0.198	0.132	0.119	0.132	0.119
Pretreatment																				
Sludge Washing	0.544	0.544	0.543	0.543	0.001	0.001	0.001	0.001	0.002	0.002	0.002	0.002	0.001	0.001	0.001	0.001	0.001	0.001	0.001	0.001
Solids/Liquid Separation																				
In-Tank Salt	0.000	0.000	0.000	0.000	0.000	0.000	0.000	0.000	0.000	0.000	0.000	0.000	0.000	0.000	0.000	0.000	0.000	0.000	0.000	0.000
Filtration	22.898	18.319	11.449	9.159	0.039	0.031	0.019	0.015	0.092	0.074	0.046	0.037	0.045	0.036	0.023	0.018	0.022	0.017	0.011	0.009
Cs IX																				
Feed Evap.	0.000	0.000	0.000	0.000	0.000	0.000	0.000	0.000	0.000	0.000	0.000	0.000	0.000	0.000	0.000	0.000	0.000	0.000	0.000	0.000
IX	0.124	0.121	0.111	0.110	0.000	0.000	0.000	0.000	0.000	0.000	0.000	0.000	0.000	0.000	0.000	0.000	0.000	0.000	0.000	0.000
Eluent Conc	0.000	0.000	0.000	0.000	0.000	0.000	0.000	0.000	0.000	0.000	0.000	0.000	0.000	0.000	0.000	0.000	0.000	0.000	0.000	0.000
FUNCTION SUBTOTAL	23.57	18.98	12.10	9.81	0.040	0.032	0.021	0.017	0.095	0.076	0.049	0.039	0.047	0.037	0.024	0.019	0.022	0.018	0.012	0.009
LLW VIT																				
Evap.	0.00	0.00	0.00	0.00	0.000	0.000	0.000	0.000	0.000	0.000	0.000	0.000	0.000	0.000	0.000	0.000	0.000	0.000	0.000	0.000
Melter	70.38	63.34	70.38	63.34	0.160	0.144	0.160	0.144	0.237	0.213	0.237	0.213	0.117	0.105	0.117	0.105	0.066	0.060	0.066	0.060
Quencher	2.41	2.17	2.41	2.17	0.004	0.004	0.004	0.004	0.009	0.009	0.009	0.009	0.005	0.004	0.005	0.004	0.002	0.002	0.002	0.002
Cut-Drying	0.25	0.22	0.25	0.22	0.000	0.000	0.000	0.000	0.001	0.001	0.001	0.001	0.000	0.000	0.000	0.000	0.000	0.000	0.000	0.000
Cyclone	0.24	0.22	0.24	0.22	0.000	0.000	0.000	0.000	0.001	0.001	0.001	0.001	0.000	0.000	0.000	0.000	0.000	0.000	0.000	0.000
NOx/SO2	4.70	4.23	4.70	4.23	0.008	0.007	0.008	0.007	0.019	0.017	0.019	0.017	0.009	0.008	0.009	0.008	0.004	0.004	0.004	0.004
Claus React.	4.76	4.29	4.76	4.29	0.008	0.008	0.008	0.008	0.019	0.017	0.019	0.017	0.009	0.008	0.009	0.008	0.005	0.004	0.005	0.004
FUNCTION SUBTOTAL	82.7	74.5	82.7	74.5	0.182	0.164	0.182	0.164	0.286	0.257	0.286	0.257	0.141	0.127	0.141	0.127	0.078	0.070	0.078	0.070
HLW VIT																				
Centrifuge	1.67	1.63	1.50	1.48	0.002	0.002	0.002	0.002	0.007	0.007	0.006	0.006	0.003	0.003	0.003	0.003	0.002	0.002	0.002	0.002
Evap.	0.00	0.00	0.00	0.00	0.000	0.000	0.000	0.000	0.000	0.000	0.000	0.000	0.000	0.000	0.000	0.000	0.000	0.000	0.000	0.000
Melter	57.92	46.34	28.96	23.17	0.133	0.106	0.066	0.053	0.192	0.154	0.096	0.077	0.095	0.076	0.048	0.038	0.065	0.052	0.033	0.026
Quench	1.79	1.75	1.61	1.59	0.003	0.003	0.003	0.003	0.007	0.007	0.007	0.006	0.004	0.003	0.003	0.003	0.002	0.002	0.002	0.002
Vent Scrub	1.85	1.81	1.66	1.65	0.003	0.003	0.003	0.003	0.007	0.007	0.007	0.007	0.004	0.004	0.003	0.003	0.002	0.002	0.002	0.002
Demist	0.18	0.18	0.16	0.16	0.000	0.000	0.000	0.000	0.001	0.001	0.001	0.001	0.000	0.000	0.000	0.000	0.000	0.000	0.000	0.000
FUNCTION SUBTOTAL	63.4	51.7	33.9	28.1	0.141	0.115	0.074	0.061	0.215	0.176	0.116	0.097	0.106	0.087	0.057	0.048	0.072	0.059	0.039	0.032
TOTAL	300	263	259	230	0.65	0.57	0.56	0.50	1.04	0.91	0.90	0.80	0.51	0.45	0.44	0.39	0.30	0.27	0.26	0.23
TOTAL WITH DELAYS	300	263	771	742	0.65	0.57	1.36	1.30	1.04	0.91	3.02	2.92	0.51	0.45	1.49	1.44	0.30	0.27	0.82	0.79

APPENDIX D

INJURY, DEATH, AND MISHAP RISK SPREADSHEETS

This page intentionally left blank.

TABLE OF CONTENTS

Appendix D-1: Hanford Worker Death and Injury Statistics D1-i
Appendix D-2: TWRS Program Process Mishap Risks for Each Module D2-i
Appendix D-3: Alternative Testing Process Mishap Risks D3-i
Appendix D-4: Alternative Testing Process Mishap Risk Summary D4-i
Appendix D-5: Alternative Testing Annualized Process Mishap Risk D5-i
Appendix D-6: Risk Analysis Factors D6-i
Appendix D-7: Annualized Injury and Death Risks D7-i

This page intentionally left blank.

APPENDIX D-1: HANFORD WORKER DEATH AND INJURY STATISTICS

This page intentionally left blank.

ICF KAISER HANFORD CONSTRUCTION REPORTING CATEGORY
(Includes: Management Support, ESH&Q, Construction Forces and Construction Management)
CY 1992 - CYTD 1994 Through October
(Information Obtained from KIPS Database)

Category	CY 1992	CY 1993	CY 1994 Through October
Number of Deaths	1	0	0
Death Incidence Rate	.10	0	0
Number of Recordable Injury/Illness Cases	111	118	77
Total Recordable Case Rate	11.43	11.15	8.19
Number of Lost/Restricted Cases	42	54	39
Lost/Restricted Workday Case Rate	4.33	5.10	4.15
Number of Days Lost/Restricted	1,549	1,598	699
Lost/Restricted Workday Severity Rate	159.52	151.00	74.38
Hours Worked	1,942,110	2,116,491	1,879,583

WHC - TRANSITION PROJECTS (Formerly Facility Operations)
CY 1990 - CYTD 1994 Through October
1xxxx
(Information Obtained from WHC Occupational Injury/Illness Database)

Category	CY 1990	CY 1991	CY 1992	CY 1993	CY 1994 Through October
Number of Deaths	0	0	0	0	0
Death Incidence Rate	0	0	0	0	0
Number of Recordable Injury/Illness Cases	38	58	87	87	63
Total Recordable Case Rate	2.73	4.10	4.61	4.46	4.13
Number of Lost/Restricted Cases	12	26	42	27	21
Lost/Restricted Workday Case Rate	0.86	1.84	2.22	1.39	1.38
Number of Days Lost/Restricted	227	695	1,308	1,458	804
Lost/Restricted Workday Severity Rate	16.29	49.09	69.26	74.81	52.73
Hours Worked	2,786,741	2,831,255	3,777,257	3,897,753	3,049,235

WHC - Operations Support Service Maintenance Departments
CY 1990 - CY 1993
50xxx, 52xxx 55xxx, 56xxx, & 57xxx
(Information Obtained from WHC Occupational Injury/Illness Database)
Departments Transferred to ICF KH effective 01/01/94

Category	CY 1990	CY 1991	CY 1992	CY 1993
Number of Deaths	0	0	0	1
Death Incidence Rate	0	0	0	0.07
Number of Recordable Injury/Illness Cases	162	61	49	56
Total Recordable Case Rate	9.38	8.70	7.69	8.66
Number of Lost/Restricted Cases	65	28	25	23
Lost/Restricted Workday Case Rate	3.77	4.00	3.93	3.56
Number of Days Lost/Restricted	2,668	870	1,296	1,159
Lost/Restricted Workday Severity Rate	154.56	124.15	203.50	179.30
Hours Worked	3,452,391	3,026,761	2,819,114	2,807,199

This page intentionally left blank.

APPENDIX D-2: TWRS PROGRAM PROCESS MISHAP RISKS FOR EACH MODULE

This page intentionally left blank.

Module Name: Base Case M.1, SST Waste Retrieval

MISHAP RISK PARAMETERS Designation:	M.1.A, SST Waste Retrieval System HL	M.1.B, SST Cleanup & Backfill HL	M.1.C, Capping Cold	Module Number 1
MAXIMUM ACCIDENT MISHAP RISK				**LIMITING EVENT**
Consequence:	25	5	1	
Frequency:	0.1	0.01	0.0001	
Risk:	2.5	0.05	0.0001	2.5
NONROUTINE MAINTENANCE MISHAP RISKS				**SUM OF EVENTS**
Electrical Instrumentation				
Consequence:	5	5	1	
Frequency:	0.01	0.0001	0.0001	
Risk:	0.05	0.0005	0.0001	0.0506
Mechanized Equipment				
Consequence:	5	5	1	
Frequency:	0.01	0.0001	0.0001	
Risk:	0.05	0.0005	0.0001	0.0506
Pluggage/Caking				
Consequence:	5	5	1	
Frequency:	0.1	0.0001	0.0001	
Risk:	0.5	0.0005	0.0001	0.5006
Corrosion				
Consequence:	5	5	1	
Frequency:	0.1	0.1	0.0001	
Risk:	0.5	0.5	0.0001	1.0001
Physical Operation				
Consequence:	5	5	1	
Frequency:	0.01	0.1	0.0001	
Risk:	0.05	0.5	0.0001	0.5501
TOTAL NONROUTINE MAINTENANCE RISK				
Risk:	1.15	1.0015	0.0005	2.15

Notes:

Accident MISHAP RISKs are energy release events with the potential to 1) release contamination within the facility and into the environment, 2) damage the equipment and facility, and 3) physically injure workers. These events could include explosion, fire, pressure release, etc.

Nonroutine maintenance MISHAP RISKs are low energy events with limited potential for releasing contaminants from process syste These events will lead to increased worker exposures resulting from nonroutine corrective maintenance.

Module Name: M.2, DST Waste Retrieval

MISHAP RISK PARAMETERS	M 2.A, DST Miscellaneous Waste Retrieval System	M.2 B Concentrated Complexant Waste Retrieval System	M 2 C, Dilute Non-Complexed Waste Retrieval System	M 2 D 242-A Evaporator	M 2 E, DST Cleanup & Backfill	M.2 F, Capping	Module Number
Designation:	HL	HL	HL	HL	HL	Cold	2
MAXIMUM ACCIDENT MISHAP RISK							**LIMITING EVENT**
Consequence:	25 0	25.0	25 0	25	5	1	
Frequency:	0 0	0.0	0.0	0.01	0.01	0 0001	
Risk:	0.3	0 3	0 3	0.25	0.05	0.0001	0 3
NONROUTINE MAINTENANCE MISHAP RISKS							**SUM OF EVENTS**
Electrical Instrumentation							
Consequence:	5	5	5	5	5	1	
Frequency:	0.0033	0 0033	0 0033	0 01	0 0001	0 0001	
Risk:	0.0167	0.0167	0 0167	0 05	0 0005	0.0001	0.1
Mechanized Equipment							
Consequence:	5	5	5	5	5	1	
Frequency:	0.0033	0.0033	0 0033	0 01	0.0001	0 0001	
Risk:	0.0167	0 0167	0 0167	0 05	0.0005	0 0001	0 1
Pluggage/Caking							
Consequence.	5	5	5	5	5	1	
Frequency:	0.0333	0 0033	0.0033	0.1	0.0001	0.0001	
Risk:	0.1667	0.0167	0.0167	0.5	0 0005	0.0001	0 7
Corrosion							
Consequence.	5	5	5	5	5	1	
Frequency:	0.0033	0.0033	0.0033	0.01	0.0001	0 0001	
Risk:	0.0167	0.0167	0 0167	0.05	0.0005	0.0001	0 1
Physical Operation							
Consequence:	5	5	5	5	5	1	
Frequency:	0.0333	0.0333	0 0333	0 01	0.1	0 0001	
Risk:	0.1667	0.1667	0 1667	0.05	0.5	0.0001	1 1
TOTAL NONROUTINE MAINTENANCE RISK							
Risk:	0.3833	0.2333	0.2333	0 7	0.502	0 0005	2 05

Notes:

Accident MISHAP RISKs are energy release events with the potential to 1) release contamination within the facility and into the environment, 2) damage the equipment and facility, and 3) physically injure workers. These events could include explosion, fire, pressure release, etc.

Nonroutine maintenance MISHAP RISKs are low energy events with limited potential for releasing contaminants from process systems These events will lead to increased worker exposures resulting from nonroutine corrective maintenance.

Module Name: Base Case M.3, DST Sludge Wash

FAILURE RISK PARAMETERS Designation:	M.3.A, Chemical Feed System Cold	M. 3.B, Sludge Settling Process HL	M.3.C, Sludge Wash Process HL	M.3.D, Wash Transfer Process HL	Module Number 3
MAXIMUM ACCIDENT MISHAP RISK					**LIMITING EVENT**
Consequence:	1	5	5	5	
Frequency:	0.0001	0.01	0 01	0.01	
Risk:	0.0001	0.05	0.05	0.05	0.05
NONROUTINE MAINTENANCE MISHAP RISKS					**SUM OF EVENTS**
Electrical Instrumentation					
Consequence:	1	5	5	5	
Frequency:	0.01	0.01	0.01	0.01	
Risk:	0.01	0.05	0.05	0.05	0.16
Mechanized Equipment					
Consequence:	1	5	5	5	
Frequency:	0.01	0.01	0.01	0.01	
Risk:	0.01	0.05	0.05	0.05	0.16
Pluggage/Caking					
Consequence:	1	5	25	5	
Frequency:	0.01	0.01	0.1	0.0001	
Risk:	0.01	0.05	2.5	0.0005	2.5605
Corrosion					
Consequence:	1	5	5	5	
Frequency:	0.0001	0.01	0.01	0.0001	
Risk:	0.0001	0.05	0.05	0.0005	0.1006
Physical Operation					
Consequence:	1	5	5	5	
Frequency:	0.0001	0.0001	0.0001	0.0001	
Risk:	0.0001	0.0005	0.0005	0.0005	0.0016
TOTAL NONROUTINE MAINTENANCE RISK					
Risk:	0.0302	0.2005	2.6505	0.1015	2.98

Notes:

Accident MISHAP RISKs are energy release events with the potential to 1) release contamination within the facility and into the environment, 2) damage the equipment and facility, and 3) physically injure workers. These events could include explosion, fire, pressure release, etc.

Nonroutine maintenance MISHAP RISKs are low energy events with limited potential for releasing contaminants from process systems. These events will lead to increased worker exposures resulting from nonroutine corrective maintenance.

Module Name: Base Case M.4, Cesium Ion Exchange

MISHAP RISK PARAMETERS	M.4.A, Accumulation System	M.4.B, Supernatant Evaporator System	M.4.C, Ion Exchange Feed	M.4.D, Cesium Ion Exchange	M.4.E, Cs IX Concentrator	M.4.F, Eluent/ Regeneration System	Module Number
Designation:	HL	HL	HL	HL	HL	LL	4
MAXIMUM ACCIDENT MISHAP RISK							**LIMITING EVENT**
Consequence:	5	100	5	5	5	1	
Frequency:	0.01	0.001	0.01	0.01	0.01	0.01	
Risk:	0.05	0.1	0.05	0.05	0.05	0.01	0.1
NONROUTINE MAINTENANCE MISHAP RISKS							**SUM OF EVENTS**
Electrical Instrumentation							
Consequence	5	5	5	5	5	1	
Frequency:	0.01	0.01	0.01	0.01	0.01	0.01	
Risk:	0.05	0.05	0.05	0.05	0.05	0.01	0.26
Mechanized Equipment							
Consequence:	5	5	5	5	5	1	
Frequency:	0.01	0.01	0.01	0.01	0.01	0.01	
Risk:	0.05	0.05	0.05	0.05	0.05	0.01	0.26
Pluggage/Caking							
Consequence:	5	5	5	5	5	1	
Frequency:	0.0001	0.0001	0.01	0.0001	0.0001	0.0001	
Risk:	0.0005	0.0005	0.05	0.0005	0.0005	0.0001	0.0521
Corrosion							
Consequence	5	5	5	5	5	1	
Frequency:	0.01	0.01	0.01	0.01	0.01	0.01	
Risk:	0.05	0.05	0.05	0.05	0.05	0.01	0.26
Physical Operation							
Consequence:	5	5	5	5	5	1	
Frequency:	0.0001	0.0001	0.0001	0.0001	0.0001	0.0001	
Risk:	0.0005	0.0005	0.0005	0.0005	0.0005	0.0001	0.0026
TOTAL NONROUTINE MAINTENANCE RISK							
Risk:	0.151	0.151	0.2005	0.151	0.151	0.0302	0.83

Notes.

Accident MISHAP RISKs are energy release events with the potential to 1) release contamination within the facility and into the environment, 2) damage the equipment and facility, and 3) physically injure workers. These events could include explosion, fire, pressure release, etc.

Nonroutine maintenance MISHAP RISKs are low energy events with limited potential for releasing contaminants from process systems. These events will lead to increased worker exposures resulting from nonroutine corrective maintenance

Module Name: M.5, LLW Glass in Sulfur

MISHAP RISK PARAMETERS Designation:	M.5.A, LLW Evaporator LL	M.5.B, LLW Melter LL	M.5.C, LLW Glass Quencher LL	M.5.D, LLW Glass Cullet Drying LL	M.5.E, LLW Cyclone System LL	Module Number 5
MAXIMUM ACCIDENT MISHAP RISK						**LIMITING EVENT**
Consequence:	100	100	25	5	5	
Frequency:	0.01	0.1	0.01	0.01	0.01	
Risk:	1	10	0.25	0.05	0.05	10
NONROUTINE MAINTENANCE MISHAP RISKS						**SUM OF EVENTS**
Electrical Instrumentation						
Consequence:	5	5	5	5	5	
Frequency:	0.01	0.01	0.01	0.01	0.01	
Risk:	0.05	0.05	0.05	0.05	0.05	0.25
Mechanized Equipment						
Consequence:	5	5	5	5	5	
Frequency:	0.01	0.01	0.01	0.01	0.1	
Risk:	0.05	0.05	0.05	0.05	0.5	0.7
Pluggage/Caking						
Consequence:	5	5	5	5	5	
Frequency:	0.0001	0.1	0.1	0.1	0.1	
Risk:	0.0005	0.5	0.5	0.5	0.5	2.0005
Corrosion						
Consequence:	5	5	5	5	5	
Frequency:	0.01	0.01	0.0001	0.0001	0.0001	
Risk:	0.05	0.05	0.0005	0.0005	0.0005	0.1015
Physical Operation						
Consequence:	5	5	5	5	5	
Frequency:	0.0001	0.0001	0.0001	0.0001	0.0001	
Risk:	0.0005	0.0005	0.0005	0.0005	0.0005	0.0025
TOTAL NONROUTINE MAINTENANCE RISK						
Risk:	0.151	0.6505	0.601	0.601	1.051	3.05

Notes:

Accident MISHAP RISKs are energy release events with the potential to 1) release contamination within the facility and into the environment, 2) damage the equipment and facility, and 3) physically injure workers. These events could include explosion, fire, pressure release, etc.

Nonroutine maintenance MISHAP RISKs are low energy events with limited potential for releasing contaminants from process systems. These events will lead to increased worker exposures resulting from nonroutine corrective maintenance.

Module Name: Base Case M.6, LLW Glass In Sulfur Vaults

FAILURE RISK PARAMETERS Designation:	M.6.A, Sulfur Cement Mixing LL	M.6.B, LLW Glass/Sulfur Mixer LL	M.6.C, Glass In Sulfur Disposal Vault LL	M.6.D, Decanted Molten Sulfur Vault LL	Module Number 6
MAXIMUM ACCIDENT MISHAP RISK					LIMITING EVENT
Consequence:	5	5	5	5	
Frequency:	0.01	0.01	0.01	0.01	
Risk:	0.05	0.05	0.05	0.05	0.05
NONROUTINE MAINTENANCE MISHAP RISKS					SUM OF EVENTS
Electrical Instrumentation					
Consequence:	5	5	5	5	
Frequency:	0.01	0.01	0.0001	0.0001	
Risk:	0.05	0.05	0.0005	0.0005	0.101
Mechanized Equipment					
Consequence:	5	5	5	5	
Frequency:	0.01	0.01	0.0001	0.0001	
Risk:	0.05	0.05	0.0005	0.0005	0.101
Pluggage/Caking					
Consequence:	5	5	5	5	
Frequency:	0.0001	1	0.0001	0.0001	
Risk:	0.0005	5	0.0005	0.0005	5.0015
Corrosion					
Consequence:	5	5	5	5	
Frequency:	0.01	0.01	0.01	0.01	
Risk:	0.05	0.05	0.05	0.05	0.2
Physical Operation					
Consequence:	5	5	5	5	
Frequency:	0.0001	0.0001	0.0001	0.0001	
Risk:	0.0005	0.0005	0.0005	0.0005	0.002
TOTAL NONROUTINE MAINTENANCE RISK Risk:	0.151	5.1505	0.052	0.052	5.41

Notes:

Accident MISHAP RISKs are energy release events with the potential to 1) release contamination within the facility and into the environment, 2) damage the equipment and facility, and 3) physically injure workers. These events could include explosion, fire, pressure release, etc.

Nonroutine maintenance MISHAP RISKs are low energy events with limited potential for releasing contaminants from process systems. These events will lead to increased worker exposures resulting from nonroutine corrective maintenance.

Module Name: M.7, HLW Glass Cullet Feed Lag Storage

MISHAP RISK PARAMETERS Designation:	M.7.A, HLW Feed Accumulation HL	M.7.B, HLW Feed Transfer Tank HL	Module Number 7
MAXIMUM ACCIDENT MISHAP RISK			**LIMITING EVENT**
Consequence:	25	25	
Frequency:	0.01	0.01	
Risk:	0.25	0.25	0.25
NONROUTINE MAINTENANCE MISHAP RISKS			**SUM OF EVENTS**
Electrical Instrumentation			
Consequence:	5	5	
Frequency:	0.01	0.01	
Risk:	0.05	0.05	0.1
Mechanized Equipment			
Consequence:	5	5	
Frequency:	0.01	0.01	
Risk:	0.05	0.05	0.1
Pluggage/Caking			
Consequence:	5	5	
Frequency:	0.1	0.1	
Risk:	0.5	0.5	1
Corrosion			
Consequence:	5	5	
Frequency:	0.0001	0.0001	
Risk:	0.0005	0.0005	0.001
Physical Operation			
Consequence:	5	5	
Frequency:	0.0001	0.0001	
Risk:	0.0005	0.0005	0.001
TOTAL NONROUTINE MAINTENANCE RISK			
Risk:	0.601	0.601	1.20

Notes:

Accident MISHAP RISKs are energy release events with the potential to 1) release contamination within the facility and into the environment, 2) damage the equipment and facility, and 3) physically injure workers. These events could include explosion, fire, pressure release, etc.

Nonroutine maintenance MISHAP RISKs are low energy events with limited potential for releasing contaminants from process systems. These events will lead to increased worker exposures resulting from nonroutine corrective maintenance.

Module Name: M.8, HLW Glass Logs

MISHAP RISK PARAMETERS Designation:	M.8.A, HLW Centrifuge System HL	M.8.B, HLW Melter Feed System HL	M.8.C, HLW Evaporator HL	M.8.D, HLW Glass Melter HL	Module Number 8
MAXIMUM ACCIDENT MISHAP RISK					LIMITING EVENT
Consequence:	25	25	100	100	
Frequency:	0.1	0.1	0.001	0.1	
Risk:	2.5	2.5	0.1	10	10
NONROUTINE MAINTENANCE MISHAP RISKS					SUM OF EVENTS
Electrical Instrumentation					
Consequence:	5	5	5	5	
Frequency:	0.01	0.01	0.01	0.01	
Risk:	0.05	0.05	0.05	0.05	0.2
Mechanized Equipment					
Consequence:	5	5	5	5	
Frequency:	0.1	0.01	0.01	0.01	
Risk:	0.5	0.05	0.05	0.05	0.65
Pluggage/Caking					
Consequence:	5	5	5	5	
Frequency:	0.1	0.1	0.0001	1	
Risk:	0.5	0.5	0.0005	5	6.0005
Corrosion					
Consequence:	5	5	5	5	
Frequency:	0.0001	0.01	0.0001	0.0001	
Risk:	0.0005	0.05	0.0005	0.0005	0.0515
Physical Operation					
Consequence:	5	5	5	5	
Frequency:	0.0001	0.0001	0.0001	0.0001	
Risk:	0.0005	0.0005	0.0005	0.0005	0.002
TOTAL NONROUTINE MAINTENANCE RISK					
Risk:	1.051	0.6505	0.1015	5.101	6.90

Notes:

Accident MISHAP RISKs are energy release events with the potential to 1) release contamination within the facility and into the environment, 2) damage the equipment and facility, and 3) physically injure workers. These events could include explosion, fire, pressure release, etc.

Nonroutine maintenance MISHAP RISKs are low energy events with limited potential for releasing contaminants from process systems. These events will lead to increased worker exposures resulting from nonroutine corrective maintenance.

Module Name: M.9, HLW Glass Cullet Cask Storage Pad

MISHAP RISK PARAMETERS Designation:	M.9.A, HLW Glass Log Canisters HL	M.9.B, Repository HL	Module Number 9
MAXIMUM ACCIDENT MISHAP RISK			**LIMITING EVENT**
Consequence:	5	5	
Frequency:	0.01	0.01	
Risk:	0.05	0.05	0.05
NONROUTINE MAINTENANCE MISHAP RISKS			**SUM OF EVENTS**
Electrical Instrumentation			
Consequence:	5	5	
Frequency:	0.01	0.01	
Risk:	0.05	0.05	0.1
Mechanized Equipment			
Consequence:	5	5	
Frequency:	0.01	0.01	
Risk:	0.05	0.05	0.1
Pluggage/Caking			
Consequence:	5	5	
Frequency:	0.1	0.0001	
Risk:	0.5	0.0005	0.5005
Corrosion			
Consequence:	5	5	
Frequency:	0.0001	0.0001	
Risk:	0.0005	0.0005	0.001
Physical Operation			
Consequence:	5	5	
Frequency:	0.01	0.01	
Risk:	0.05	0.05	0.1
TOTAL NONROUTINE MAINTENANCE RISK			
Risk:	0.6505	0.151	0.80

Notes:

Accident MISHAP RISKs are energy release events with the potential to 1) release contamination within the facility and into environment, 2) damage the equipment and facility, and 3) physically injure workers. These events could include explosion, fire, pressure release, etc.

Nonroutine maintenance MISHAP RISKs are low energy events with limited potential for releasing contaminants from proce These events will lead to increased worker exposures resulting from nonroutine corrective maintenance.

Module Name: M.10, Cullet Rework and Vitrification Offgas Processing

MISHAP RISK PARAMETERS	M.10.A, Cyclone System	M.10.B, LLW Separator	M.10.C, NOx/SO2 Separator	M.10.D, Claus Reactor System	M.10.E, HLW Separator	M.10.F, HLW Condenser	M.10.G, HLW Filters	M.10.H, HLW Evaporator	Module Number
Designation:	HL	LL	LL	LL	HL	LL	LL	LL	10
MAXIMUM ACCIDENT MISHAP RISK									**LIMITING EVENT**
Consequence:	5	5	1	5	5	5	5	5	
Frequency:	0.01	0.01	0.01	0.01	0.01	0.01	0.001	0.01	
Risk:	0.05	0.05	0.01	0.05	0.05	0.05	0.005	0.05	0.05
NONROUTINE MAINTENANCE MISHAP RISKS									**SUM OF EVENTS**
Electrical Instrumentation									
Consequence:	5	5	1	5	5	5	5	5	
Frequency:	0.01	0.01	0.01	0.01	0.01	0.01	0.001	0.01	
Risk:	0.05	0.05	0.01	0.05	0.05	0.05	0.005	0.05	0.315
Mechanized Equipment									
Consequence:	5	5	1	5	5	5	5	5	
Frequency:	0.1	0.01	0.01	0.01	0.01	0.01	0.001	0.01	
Risk:	0.5	0.05	0.01	0.05	0.05	0.05	0.005	0.05	0.765
Pluggage/Caking									
Consequence:	5	5	1	5	5	5	5	5	
Frequency:	0.0001	0.1	0.0001	0.0001	0.001	0.0001	0.0001	0.001	
Risk:	0.0005	0.5	0.0001	0.0005	0.005	0.0005	0.0005	0.005	0.5121
Corrosion									
Consequence:	5	5	1	5	5	5	5	5	
Frequency:	0.0001	0.01	0.0001	0.0001	0.01	0.1	0.001	0.01	
Risk:	0.0005	0.05	0.0001	0.0005	0.05	0.5	0.005	0.05	0.6561
Physical Operation									
Consequence:	5	5	1	5	5	5	5	5	
Frequency:	0.0001	0.0001	0.0001	0.0001	0.0001	0.0001	0.0001	0.001	
Risk:	0.0005	0.0005	0.0001	0.0005	0.0005	0.0005	0.0005	0.005	0.0081
TOTAL NONROUTINE MAINTENANCE RISK									
Risk:	0.5515	0.6505	0.0203	0.1015	0.1555	0.601	0.016	0.16	2.26

Notes:

Accident MISHAP RISKs are energy release events with the potential to 1) release contamination within the facility and into the environment, 2) damage the equipment and facility, and 3) physically injure workers. These events could include explosion, fire, pressure release, etc.

Nonroutine maintenance MISHAP RISKs are low energy events with limited potential for releasing contaminants from process systems. These events will lead to increased worker exposures resulting from nonroutine corrective maintenance.

Module Name: M.11, Liquid Effluent Treatment Facility

MISHAP RISK PARAMETERS	M.11.A, Process Condensate Recycle	M.11.B, pH Adjustment Tank	M.11.C, Retention Basin	Module Number
Designation:	LL	LL	LL	11
MAXIMUM ACCIDENT MISHAP RISK				**LIMITING EVENT**
Consequence:	5	1	5	
Frequency:	0.01	0.01	0.01	
Risk:	0.05	0.01	0.05	0.05
NONROUTINE MAINTENANCE MISHAP RISKS				**SUM OF EVENTS**
Electrical Instrumentation				
Consequence:	5	1	5	
Frequency:	0.01	0.01	0.0001	
Risk:	0.05	0.01	0.0005	0.0605
Mechanized Equipment				
Consequence:	5	1	5	
Frequency:	0.01	0.01	0.0001	
Risk:	0.05	0.01	0.0005	0.0605
Pluggage/Caking				
Consequence:	5	1	5	
Frequency:	0.0001	0.0001	0.0001	
Risk:	0.0005	0.0001	0.0005	0.0011
Corrosion				
Consequence:	5	1	5	
Frequency:	0.0001	0.0001	0.0001	
Risk:	0.0005	0.0001	0.0005	0.0011
Physical Operation				
Consequence:	5	1	5	
Frequency:	0.0001	0.0001	0.0001	
Risk:	0.0005	0.0001	0.0005	0.0011
TOTAL NONROUTINE MAINTENANCE RISK				
Risk:	0.1015	0.0203	0.0025	0.12

Notes:

Accident MISHAP RISKs are energy release events with the potential to 1) release contamination within the facility and into the environment, 2) damage the equipment and facility, and 3) physically injure workers. These events could include explosion, fire, pressure release, etc.

Nonroutine maintenance MISHAP RISKs are low energy events with limited potential for releasing contaminants from process sys These events will lead to increased worker exposures resulting from nonroutine corrective maintenance.

Module Name: M.12, Chemical Make-up Unit

MISHAP RISK PARAMETERS Designation:	M.12.A, Dry Storage Cold	M.12.B, Bulk Liquid Storage Cold	M.12.C, Bulk H2O Storage Cold	M.12.D, Bulk Combustible Liquid Storage Cold	M.12.E, Glass Melter Batch Mixers Cold	Module Number 12
MAXIMUM ACCIDENT MISHAP RISK						**LIMITING EVENT**
Consequence:	1	1	1	1	1	
Frequency:	0.0001	0.01	0.0001	0.1	0.0001	
Risk:	0.0001	0.01	0.0001	0.1	0.0001	0.1
NONROUTINE MAINTENANCE MISHAP RISKS						**SUM OF EVENTS**
Electrical Instrumentation						
Consequence:	1	1	1	1	1	
Frequency:	0.0001	0.01	0.0001	0.0001	0.01	
Risk:	0.0001	0.01	0.0001	0.0001	0.01	0.0203
Mechanized Equipment						
Consequence:	1	1	1	1	1	
Frequency:	0.0001	0.01	0.0001	0.0001	0.01	
Risk:	0.0001	0.01	0.0001	0.0001	0.01	0.0203
Pluggage/Caking						
Consequence:	1	1	1	1	1	
Frequency:	0.0001	0.0001	0.0001	0.0001	1	
Risk:	0.0001	0.0001	0.0001	0.0001	1	1.0004
Corrosion						
Consequence:	1	1	1	1	1	
Frequency:	0.0001	0.1	0.0001	0.0001	0.01	
Risk:	0.0001	0.1	0.0001	0.0001	0.01	0.1103
Physical Operation						
Consequence:	1	1	1	1	1	
Frequency:	0.01	0.0001	0.0001	0.0001	0.0001	
Risk:	0.01	0.0001	0.0001	0.0001	0.0001	0.0104
TOTAL NONROUTINE MAINTENANCE RISK						
Risk:	0.0104	0.1202	0.0005	0.0005	1.0301	1.16

Notes:

Accident MISHAP RISKs are energy release events with the potential to 1) release contamination within the facility and into the environment, 2) damage the equipment and facility, and 3) physically injure workers. These events could include explosion, fire, pressure release, etc.

Nonroutine maintenance MISHAP RISKs are low energy events with limited potential for releasing contaminants from process systems. These events will lead to increased worker exposures resulting from nonroutine corrective maintenance.

Module Name: M.13, Air/Vapor Filtration System

MISHAP RISK PARAMETERS Designation:	M.13.A, CVOG/VOG System LL	M.13.B, VOG/CVOG/PVOG Air Supply System Cold	M.13.C, Process Stack Filter System LL	M.13.D, BVOG System HL	M.13.E, BVOG Air Supply System Cold	M.13.F, Storage Stack Filter System LL	M.13.G, Oxygen Supply System Cold	Module Number 13
MAXIMUM ACCIDENT MISHAP RISK								**LIMITING EVENT**
Consequence:	5	1	5	5	1	5	1	
Frequency:	0.0001	0.0001	0.0001	0.0001	0.0001	0.0001	0.01	
Risk:	0.0005	0.0001	0.0005	0.0005	0.0001	0.0005	0.01	0.01
NONROUTINE MAINTENANCE MISHAP RISKS								**SUM OF EVENTS**
Electrical Instrumentation								
Consequence:	5	1	5	5	1	5	1	
Frequency:	0.01	0.01	0.01	0.01	0.01	0.01	0.01	
Risk:	0.05	0.01	0.05	0.05	0.01	0.05	0.01	0.23
Mechanized Equipment								
Consequence:	5	1	5	5	1	5	1	
Frequency:	0.01	0.01	0.01	0.01	0.01	0.01	0.01	
Risk:	0.05	0.01	0.05	0.05	0.01	0.05	0.01	0.23
Pluggage/Caking								
Consequence:	5	1	5	5	1	5	1	
Frequency:	0.0001	0.0001	0.01	0.0001	0.0001	0.01	0.0001	
Risk:	0.0005	0.0001	0.05	0.0005	0.0001	0.05	0.0001	0.1013
Corrosion								
Consequence:	5	1	5	5	1	5	1	
Frequency:	0.0001	0.0001	0.0001	0.0001	0.0001	0.0001	0.0001	
Risk:	0.0005	0.0001	0.0005	0.0005	0.0001	0.0005	0.0001	0.0023
Physical Operation								
Consequence:	5	1	5	5	1	5	1	
Frequency:	0.0001	0.0001	0.0001	0.0001	0.0001	0.0001	0.0001	
Risk:	0.0005	0.0001	0.0005	0.0005	0.0001	0.0005	0.0001	0.0023
TOTAL NONROUTINE MAINTENANCE RISK								
Risk:	0.1015	0.0203	0.151	0.1015	0.0203	0.151	0.0203	0.57

Notes:

Accident MISHAP RISKs are energy release events with the potential to 1) release contamination within the facility and into the environment, 2) damage the equipment and facility, and 3) physically injure workers. These events could include explosion, fire, pressure release, etc.

Nonroutine maintenance MISHAP RISKs are low energy events with limited potential for releasing contaminants from process systems. These events will lead to increased worker exposures resulting from nonroutine corrective maintenance.

This page intentionally left blank.

APPENDIX D-3: ALTERNATIVE TESTING PROCESS MISHAP RISKS

This page intentionally left blank.

BASELINE ALTERNATIVE

Module Name RETRIEVAL

MISHAP RISK PARAMETERS	Large Pilot Plant For Hot Functional Testing	Small Scale Integrated Pilot Plant	Small Scale Functional Hot Pilot Plant	Bench Scale Hot Test	Lab Scale Hot Tests	Bench Scale Simulants and Tracers	Lab Scale Simulants and Tracers	Pilot Scale Simulant Tests	Large Scale and Full Scale Equip. Tests	Full Scale Hot Demonstration or Process Test	Module Number
Designation:	HL	HL	HL	HL	LL	Cold	Cold	Cold	Cold	HL	
MAXIMUM ACCIDENT MISHAP RISK											LIMITING EVENT
Consequence:	N/A	N/A	N/A	N/A	N/A	N/A	N/A	N/A	25	25	
Frequency:	N/A	N/A	N/A	N/A	N/A	N/A	N/A	N/A	0 01	0.1	
Risk:									0.25	2.5	2.5
										SUM	2.75
NONROUTINE MAINTENANCE MISHAP RISKS											SUM OF EVENTS
Electrical Instrumentation											
Consequence:	N/A	N/A	N/A	N/A	N/A	N/A	N/A	N/A	1	5	
Frequency:	N/A	N/A	N/A	N/A	N/A	N/A	N/A	N/A	0 001	0 001	
Risk:									0.001	0 005	0.006
Mechanized Equipment											
Consequence:	N/A	N/A	N/A	N/A	N/A	N/A	N/A	N/A	1	5	
Frequency:	N/A	N/A	N/A	N/A	N/A	N/A	N/A	N/A	0.001	0 001	
Risk:									0.001	0.005	0 006
Pluggage/Caking											
Consequence:	N/A	N/A	N/A	N/A	N/A	N/A	N/A	N/A	1	5	
Frequency:	N/A	N/A	N/A	N/A	N/A	N/A	N/A	N/A	0.01	0 01	
Risk:									0.01	0 05	0 06
Corrosion											
Consequence:	N/A	N/A	N/A	N/A	N/A	N/A	N/A	N/A	1	5	
Frequency:	N/A	N/A	N/A	N/A	N/A	N/A	N/A	N/A	0 001	0 001	
Risk:									0 001	0 005	0.006
Physical Operation											
Consequence:	N/A	N/A	N/A	N/A	N/A	N/A	N/A	N/A	1	5	
Frequency:	N/A	N/A	N/A	N/A	N/A	N/A	N/A	N/A	0 001	0.001	
Risk:									0.001	0.005	0 006
TOTAL NONROUTINE MAINTENANCE MISHAP RISK											
Risk:									0.014	0 07	0 084
										Total	2 834

Notes:

Accident mishap risks are energy release events with the potential to 1) release contamination within the facility and into the environment, 2) damage the equipment and facility, and 3) physically injure workers. These events could include explosion, fire, pressure release, etc.

Nonroutine maintenance mishap risks are low energy events with limited potential for releasing contaminants from process systems. These events will lead to increased worker exposures resulting from nonroutine corrective maintenance.

Electrical Inst., Mechanized Equip , Pluggage/Caking, and Corrosion N/A for most tests due to size of tests

BASELINE ALTERNATIVE

Module Name SLUDGE WASHING

MISHAP RISK PARAMETERS	Large Pilot Plant For Hot Functional Testing	Small Scale Integrated Pilot Plant	Small Scale Functional Hot Pilot Plant	Bench Scale Hot Test	Lab Scale Hot Tests	Bench Scale Simulants and Tracers	Lab Scale Simulants and Tracers	Pilot Scale Simulant Tests	Large Scale and Full Scale Equip Tests	Full Scale Hot Demonstration or Process Test	Module Number
Designation:	HL	HL	HL	HL	LL	Cold	Cold	Cold	Cold	HL	
MAXIMUM ACCIDENT MISHAP RISK											LIMITING EVENT
Consequence	N/A	N/A	N/A	5	5	N/A	N/A	1	5	5	
Frequency:	N/A	N/A	N/A	0 0001	0.0001	N/A	N/A	0.0001	0 0001	0.01	
Risk.				0 0005	0 0005			0.0001	0.0005	0 05	0 05
										SUM	0 0516
NONROUTINE MAINTENANCE MISHAP RISKS											SUM OF EVENTS
Electrical Instrumentation											
Consequence.	N/A	N/A	N/A	N/A	N/A	N/A	N/A	1	1	5	
Frequency:	N/A	N/A	N/A	N/A	N/A	N/A	N/A	0.001	0.01	0.01	
Risk:								0.001	0.01	0.05	0 061
Mechanized Equipment											
Consequence:	N/A	N/A	N/A	N/A	N/A	N/A	N/A	1	1	5	
Frequency:	N/A	N/A	N/A	N/A	N/A	N/A	N/A	0 001	0.01	0 01	
Risk:								0.001	0.01	0 05	0 061
Pluggage/Caking											
Consequence	N/A	N/A	N/A	N/A	N/A	N/A	N/A	5	5	25	
Frequency:	N/A	N/A	N/A	N/A	N/A	N/A	N/A	0 01	0.1	0.1	
Risk·								0.05	0.5	2 5	3 05
Corrosion											
Consequence:	N/A	N/A	N/A	N/A	N/A	N/A	N/A	1	1	5	
Frequency:	N/A	N/A	N/A	N/A	N/A	N/A	N/A	0.0001	0.01	0 01	
Risk:								0.0001	0.01	0 05	0.0601
Physical Operation											
Consequence:	N/A	N/A	N/A	1	1	N/A	N/A	1	1	5	
Frequency:	N/A	N/A	N/A	0.0001	0.0001	N/A	N/A	0.0001	0 001	0 001	
Risk:				0.0001	0.0001			0.0001	0 001	0 005	0 0063
TOTAL NONROUTINE MAINTENANCE MISHAP RISK											
Risk:				0.0001	0 0001			0.0522	0 531	2 655	3 2384
										Total	3.29

Notes:

Accident mishap risks are energy release events with the potential to 1) release contamination within the facility and into the environment, 2) damage the equipment and facility, and 3) physically injure workers. These events could include explosion, fire, pressure release, etc.

Nonroutine maintenance mishap risks are low energy events with limited potential for releasing contaminants from process systems. These events will lead to increased worker exposures resulting from nonroutine corrective maintenance.

Electrical Inst., Mechanized Equip., Pluggage/Caking, and Corrosion N/A for most tests due to size of tests.

BASELINE ALTERNATIVE

Module Name SOLIDS/LIQUIDS SEPARATION

MISHAP RISK PARAMETERS	Large Pilot Plant For Hot Functional Testing	Small Scale Integrated Pilot Plant	Small Scale Functional Hot Pilot Plant	Bench Scale Hot Test	Lab Scale Hot Tests	Bench Scale Simulants and Tracers	Lab Scale Simulants and Tracers	Pilot Scale Simulant Tests	Large Scale and Full Scale Equip Tests	Full Scale Hot Demonstration or Process Test	Module Number
Designation:	HL	HL	HL	HL	LL	Cold	Cold	Cold	Cold	HL	
MAXIMUM ACCIDENT MISHAP RISK											LIMITING EVENT
Consequence.	N/A	N/A	N/A	5	5	1	1	1	5	5	
Frequency:	N/A	N/A	N/A	0.0001	0.0001	0 0001	0.0001	0.0001	0.0001	0.001	
Risk:				0.0005	0 0005	0 0001	0 0001	0 0001	0.0005	0 005	0 005
										SUM	0.0068
NONROUTINE MAINTENANCE MISHAP RISKS											SUM OF EVENTS
Electrical Instrumentation											
Consequence.	N/A	N/A	N/A	N/A	N/A	N/A	N/A	1	1	5	
Frequency:	N/A	N/A	N/A	N/A	N/A	N/A	N/A	0.001	0.01	0.01	
Risk:								0.001	0.01	0 05	0 061
Mechanized Equipment											
Consequence:	N/A	N/A	N/A	N/A	N/A	N/A	N/A	1	1	5	
Frequency:	N/A	N/A	N/A	N/A	N/A	N/A	N/A	0.001	0 01	0.01	
Risk:								0.001	0.01	0 05	0.061
Pluggage/Caking											
Consequence:	N/A	N/A	N/A	N/A	N/A	N/A	N/A	1	5	25	
Frequency:	N/A	N/A	N/A	N/A	N/A	N/A	N/A	0.01	0.1	0.1	
Risk:								0.01	0 5	2 5	3.01
Corrosion											
Consequence:	N/A	N/A	N/A	N/A	N/A	N/A	N/A	1	1	5	
Frequency:	N/A	N/A	N/A	N/A	N/A	N/A	N/A	0.0001	0.01	0 01	
Risk:								0.0001	0.01	0.05	0.0601
Physical Operation											
Consequence:	N/A	N/A	N/A	1	1	1	1	1	1	5	
Frequency:	N/A	N/A	N/A	0.0001	0.0001	0.0001	0.0001	0 0001	0.0001	0.001	
Risk:				0.0001	0.0001	0 0001	0.0001	0.0001	0.0001	0.005	0.0056
TOTAL NONROUTINE MAINTENANCE MISHAP RISK											
Risk:				0.0001	0.0001	0.0001	0.0001	0.0122	0.5301	2.655	3.1977
										Total	3.2045

Notes:

Accident mishap risks are energy release events with the potential to 1) release contamination within the facility and into the environment, 2) damage the equipment and facility, and 3) physically injure workers. These events could include explosion, fire, pressure release, etc.

Nonroutine maintenance mishap risks are low energy events with limited potential for releasing contaminants from process systems These events will lead to increased worker exposures resulting from nonroutine corrective maintenance.

Electrical Inst., Mechanized Equip., Pluggage/Caking, and Corrosion N/A for most tests due to size of tests

BASELINE ALTERNATIVE

Module Name CESIUM ION EXCHANGE

MISHAP RISK PARAMETERS	Large Pilot Plant For Hot Functional Testing	Small Scale Integrated Pilot Plant	Small Scale Functional Hot Pilot Plant	Bench Scale Hot Test	Lab Scale Hot Tests	Bench Scale Simulants and Tracers	Lab Scale Simulants and Tracers	Pilot Scale Simulant Tests	Large Scale and Full Scale Equip. Tests	Full Scale Hot Demonstration or Process Test	Module Number
Designation.	HL	HL	HL	HL	LL	Cold	Cold	Cold	Cold	HL	
MAXIMUM ACCIDENT MISHAP RISK											**LIMITING EVENT**
Consequence:	N/A	N/A	N/A	5	5	5	1	5	25	100	
Frequency:	N/A	N/A	N/A	0 001	0 001	0 001	0 0001	0 001	0 001	0 001	
Risk:				0 005	0 005	0 005	0 0001	0 005	0.025	0.1	0 1
										SUM	0.1451
NONROUTINE MAINTENANCE MISHAP RISKS											**SUM OF EVENTS**
Electrical Instrumentation											
Consequence:	N/A	N/A	N/A	N/A	N/A	N/A	N/A	1	1	5	
Frequency:	N/A	N/A	N/A	N/A	N/A	N/A	N/A	0.0001	0.001	0.001	
Risk:								0.0001	0 001	0 005	0 0061
Mechanized Equipment											
Consequence:	N/A	N/A	N/A	N/A	N/A	N/A	N/A	1	1	5	
Frequency:	N/A	N/A	N/A	N/A	N/A	N/A	N/A	0.0001	0.001	0 001	
Risk:								0.0001	0 001	0.005	0 0061
Pluggage/Caking											
Consequence:	N/A	N/A	N/A	N/A	N/A	N/A	N/A	1	1	5	
Frequency:	N/A	N/A	N/A	N/A	N/A	N/A	N/A	0 0001	0 01	0 01	
Risk:								0 0001	0.01	0 05	0 0601
Corrosion											
Consequence:	N/A	N/A	N/A	N/A	N/A	N/A	N/A	1	1	5	
Frequency:	N/A	N/A	N/A	N/A	N/A	N/A	N/A	0.0001	0.01	0 01	
Risk:								0.0001	0 01	0.05	0 0601
Physical Operation											
Consequence:	N/A	N/A	N/A	1	1	1	1	1	1	5	
Frequency:	N/A	N/A	N/A	0.001	0.001	0 001	0.0001	0.0001	0.001	0.001	
Risk:				0 001	0.001	0 001	0 0001	0 0001	0.001	0.005	0 0092
TOTAL NONROUTINE MAINTENANCE MISHAP RISK											
Risk:				0.001	0.001	0.001	0.0001	0.0005	0.023	0.115	0.1416
										Total	0 2867

Notes:

Accident mishap risks are energy release events with the potential to 1) release contamination within the facility and into the environment, 2) damage the equipment and facility, and 3) physically injure workers. These events could include explosion, fire, pressure release, etc.

Nonroutine maintenance mishap risks are low energy events with limited potential for releasing contaminants from process systems These events will lead to increased worker exposures resulting from nonroutine corrective maintenance.

Electrical Inst., Mechanized Equip., Pluggage/Caking, and Corrosion N/A for most tests due to size of tests.

BASELINE ALTERNATIVE

Module Name LOW LEVEL WASTE VITRIFICATION

MISHAP RISK PARAMETERS	Large Pilot Plant For Hot Functional Testing	Small Scale Integrated Pilot Plant	Small Scale Functional Hot Pilot Plant	Bench Scale Hot Test	Lab Scale Hot Tests	Bench Scale Simulants and Tracers	Lab Scale Simulants and Tracers	Pilot Scale Simulant Tests	Large Scale and Full Scale Equip. Tests	Full Scale Hot Demonstration or Process Test	Module Number
Designation:	LL	LL	LL	LL	LL	Cold	Cold	Cold	Cold	LL	
MAXIMUM ACCIDENT MISHAP RISK											**LIMITING EVENT**
Consequence:	N/A	N/A	N/A	5	5	1	1	5	25	100	
Frequency:	N/A	N/A	N/A	0.01	0.01	0.01	0.001	0.01	0.1	0.1	
Risk:				0.05	0.05	0.01	0.001	0.05	2.5	10	10
										SUM	12 661
NONROUTINE MAINTENANCE MISHAP RISKS											**SUM OF EVENTS**
Electrical Instrumentation											
Consequence:	N/A	N/A	N/A	N/A	N/A	N/A	N/A	5	5	25	
Frequency:	N/A	N/A	N/A	N/A	N/A	N/A	N/A	0.01	0.1	0.1	
Risk:								0.05	0.5	2.5	3.05
Mechanized Equipment											
Consequence:	N/A	N/A	N/A	N/A	N/A	N/A	N/A	1	1	5	
Frequency:	N/A	N/A	N/A	N/A	N/A	N/A	N/A	0.0001	0.01	0.1	
Risk:								0.0001	0.01	0 5	0.5101
Pluggage/Caking											
Consequence:	N/A	N/A	N/A	N/A	N/A	N/A	N/A	5	5	5	
Frequency:	N/A	N/A	N/A	N/A	N/A	N/A	N/A	0 01	0.1	0.1	
Risk:								0.05	0.5	0.5	1 05
Corrosion											
Consequence:	N/A	N/A	N/A	N/A	N/A	N/A	N/A	1	1	5	
Frequency:	N/A	N/A	N/A	N/A	N/A	N/A	N/A	0.0001	0.01	0.01	
Risk:								0.0001	0.01	0.05	0 0601
Physical Operation											
Consequence:	N/A	N/A	N/A	1	1	1	1	1	1	5	
Frequency:	N/A	N/A	N/A	0.0001	0.0001	0.0001	0.0001	0.0001	0.001	0.001	
Risk:				0.0001	0.0001	0.0001	0.0001	0.0001	0.001	0.005	0 0065
TOTAL NONROUTINE MAINTENANCE MISHAP RISK											
Risk:				0.0001	0.0001	0.0001	0.0001	0.1003	1.021	3.555	4 6767
										Total	17 3377

Notes:

Accident mishap risks are energy release events with the potential to 1) release contamination within the facility and into the environment, 2) damage the equipment and facility, and 3) physically injure workers. These events could include explosion, fire, pressure release, etc.

Nonroutine maintenance mishap risks are low energy events with limited potential for releasing contaminants from process systems These events will lead to increased worker exposures resulting from nonroutine corrective maintenance.

Electrical Inst., Mechanized Equip , Pluggage/Caking, and Corrosion N/A for most tests due to size of tests

BASELINE ALTERNATIVE

Module Name HIGH LEVEL WASTE VITRIFICATION

MISHAP RISK PARAMETERS	Large Pilot Plant For Hot Functional Testing	Small Scale Integrated Pilot Plant	Small Scale Functional Hot Pilot Plant	Bench Scale Hot Test	Lab Scale Hot Tests	Bench Scale Simulants and Tracers	Lab Scale Simulants and Tracers	Pilot Scale Simulant Tests	Large Scale and Full Scale Equip Tests	Full Scale Hot Demonstration or Process Test	Module Number
Designation:	HL	HL	HL	HL	LL	Cold	Cold	Cold	Cold	HL	
MAXIMUM ACCIDENT MISHAP RISK											**LIMITING EVENT**
Consequence:	N/A	N/A	N/A	5	5	1	1	5	25	100	
Frequency:	N/A	N/A	N/A	0 01	0 01	0 01	0.001	0 01	0.1	0.1	
Risk:				0 05	0 05	0 01	0 001	0 05	2 5	10	10
										SUM	12 661
NONROUTINE MAINTENANCE MISHAP RISKS											**SUM OF EVENTS**
Electrical Instrumentation											
Consequence:	N/A	N/A	N/A	N/A	N/A	N/A	N/A	5	5	25	
Frequency:	N/A	N/A	N/A	N/A	N/A	N/A	N/A	0 01	0.1	0.1	
Risk:								0.05	0.5	2 5	3 05
Mechanized Equipment											
Consequence:	N/A	N/A	N/A	N/A	N/A	N/A	N/A	1	1	5	
Frequency:	N/A	N/A	N/A	N/A	N/A	N/A	N/A	0.0001	0 01	0.01	
Risk:								0.0001	0 01	0 05	0.0601
Pluggage/Caking											
Consequence:	N/A	N/A	N/A	N/A	N/A	N/A	N/A	1	5	5	
Frequency:	N/A	N/A	N/A	N/A	N/A	N/A	N/A	0 0001	0.01	0.1	
Risk:								0.0001	0.05	0.1	0 1501
Corrosion											
Consequence:	N/A	N/A	N/A	N/A	N/A	N/A	N/A	1	1	5	
Frequency:	N/A	N/A	N/A	N/A	N/A	N/A	N/A	0.0001	0.01	0.01	
Risk:								0.0001	0.01	0.05	0 0601
Physical Operation											
Consequence:	N/A	N/A	N/A	1	1	1	1	1	1	5	
Frequency:	N/A	N/A	N/A	0 0001	0 0001	0 0001	0 0001	0 0001	0 001	0 001	
Risk:				0 0001	0.0001	0 0001	0 0001	0 0001	0.001	0.005	0 0065
TOTAL NONROUTINE MAINTENANCE MISHAP RISK											
Risk:				0 0001	0.0001	0.0001	0.0001	0.0504	0.571	2.705	3.3268
										Total	15.9878

Notes.

Accident mishap risks are energy release events with the potential to 1) release contamination within the facility and into the environment, 2) damage the equipment and facility, and 3) physically injure workers. These events could include explosion, fire, pressure release, etc.

Nonroutine maintenance mishap risks are low energy events with limited potential for releasing contaminants from process systems. These events will lead to increased worker exposures resulting from nonroutine corrective maintenance.

Electrical Inst., Mechanized Equip., Pluggage/Caking, and Corrosion N/A for most tests due to size of tests.

ALTERNATIVE 1

Module Name **RETRIEVAL**

MISHAP RISK PARAMETERS	Large Pilot Plant For Hot Functional Testing	Small Scale Integrated Pilot Plant	Small Scale Functional Hot Pilot Plant	Bench Scale Hot Test	Lab Scale Hot Tests	Bench Scale Simulants and Tracers	Lab Scale Simulants and Tracers	Pilot Scale Simulant Tests	Large Scale and Full Scale Equip. Tests	Full Scale Hot Demonstration or Process Test	Module Number
Designation:	HL	HL	HL	HL	LL	Cold	Cold	Cold	Cold	HL	
MAXIMUM ACCIDENT MISHAP RISK											LIMITING EVENT
Consequence:	N/A	N/A	N/A	N/A	N/A	N/A	N/A	N/A	25	25	
Frequency:	N/A	N/A	N/A	N/A	N/A	N/A	N/A	N/A	0.01	0.1	
Risk:									0.25	2.5	2.5
NONROUTINE MAINTENANCE MISHAP RISKS											SUM OF EVENTS
Electrical Instrumentation											
Consequence:	N/A	N/A	N/A	N/A	N/A	N/A	N/A	N/A	1	5	
Frequency:	N/A	N/A	N/A	N/A	N/A	N/A	N/A	N/A	0.001	0.001	
Risk:									0.001	0.005	0.006
Mechanized Equipment											
Consequence:	N/A	N/A	N/A	N/A	N/A	N/A	N/A	N/A	1	5	
Frequency:	N/A	N/A	N/A	N/A	N/A	N/A	N/A	N/A	0.001	0.001	
Risk:									0.001	0.005	0.006
Pluggage/Caking											
Consequence:	N/A	N/A	N/A	N/A	N/A	N/A	N/A	N/A	1	5	
Frequency:	N/A	N/A	N/A	N/A	N/A	N/A	N/A	N/A	0.01	0.01	
Risk:									0.01	0.05	0.06
Corrosion											
Consequence:	N/A	N/A	N/A	N/A	N/A	N/A	N/A	N/A	1	5	
Frequency:	N/A	N/A	N/A	N/A	N/A	N/A	N/A	N/A	0.001	0.001	
Risk:									0.001	0.005	0.006
Physical Operation											
Consequence:	N/A	N/A	N/A	N/A	N/A	N/A	N/A	N/A	1	5	
Frequency:	N/A	N/A	N/A	N/A	N/A	N/A	N/A	N/A	0.001	0.001	
Risk:									0.001	0.005	0.006
TOTAL NONROUTINE MAINTENANCE MISHAP RISK											
Risk:									0.014	0.07	0.084

Notes:

Accident mishap risks are energy release events with the potential to 1) release contamination within the facility and into the environment, 2) damage the equipment and facility, and 3) physically injure workers. These events could include explosion, fire, pressure release, etc.

Nonroutine maintenance mishap risks are low energy events with limited potential for releasing contaminants from process systems These events will lead to increased worker exposures resulting from nonroutine corrective maintenance.

Electrical Inst., Mechanized Equip., Pluggage/Caking, and Corrosion N/A for most tests due to size of tests.

ALTERNATIVE 1

Module Name SLUDGE WASHING

MISHAP RISK PARAMETERS	Large Pilot Plant For Hot Functional Testing	Small Scale Integrated Pilot Plant	Small Scale Functional Hot Pilot Plant	Bench Scale Hot Test	Lab Scale Hot Tests	Bench Scale Simulants and Tracers	Lab Scale Simulants and Tracers	Pilot Scale Simulant Tests	Large Scale and Full Scale Equip. Tests	Full Scale Hot Demonstration or Process Test	Module Number
Designation:	HL	HL	HL	HL	LL	Cold	Cold	Cold	Cold	HL	
MAXIMUM ACCIDENT MISHAP RISK											**LIMITING EVENT**
Consequence:	5	N/A	N/A	5	5	N/A	N/A	1	5	5	
Frequency:	0.001	N/A	N/A	0 0001	0.0001	N/A	N/A	0 0001	0 0001	0.01	
Risk:	0 005			0.0005	0 0005			0 0001	0.0005	0 05	0 05
NONROUTINE MAINTENANCE MISHAP RISKS											**SUM OF EVENTS**
Electrical Instrumentation											
Consequence:	5	N/A	N/A	N/A	N/A	N/A	N/A	1	1	5	
Frequency:	0.01	N/A	N/A	N/A	N/A	N/A	N/A	0 001	0 01	0.01	
Risk:	0 05							0.001	0.01	0 05	0 111
Mechanized Equipment											
Consequence:	5	N/A	N/A	N/A	N/A	N/A	N/A	1	1	5	
Frequency:	0.01	N/A	N/A	N/A	N/A	N/A	N/A	0.001	0.01	0.01	
Risk:	0.05							0.001	0 01	0.05	0.111
Pluggage/Caking											
Consequence:	5	N/A	N/A	N/A	N/A	N/A	N/A	5	5	25	
Frequency:	0.1	N/A	N/A	N/A	N/A	N/A	N/A	0 01	0.1	0 1	
Risk:	0.5							0.05	0 5	2.5	3 55
Corrosion											
Consequence:	5	N/A	N/A	N/A	N/A	N/A	N/A	1	1	5	
Frequency:	0.01	N/A	N/A	N/A	N/A	N/A	N/A	0.0001	0.01	0 01	
Risk:	0.05							0 0001	0 01	0.05	0.1101
Physical Operation											
Consequence:	5	N/A	N/A	1	1	N/A	N/A	1	1	5	
Frequency:	0.001	N/A	N/A	0.0001	0.0001	N/A	N/A	0.0001	0.001	0 001	
Risk:	0.005			0.0001	0 0001			0.0001	0 001	0.005	0 0113
TOTAL NONROUTINE MAINTENANCE MISHAP RISK Risk:	0.655			0.0001	0.0001			0 0522	0.531	2.655	3 8934

Notes:

Accident mishap risks are energy release events with the potential to 1) release contamination within the facility and into the environment, 2) damage the equipment and facility, and 3) physically injure workers. These events could include explosion, fire, pressure release, etc.

Nonroutine maintenance mishap risks are low energy events with limited potential for releasing contaminants from process systems These events will lead to increased worker exposures resulting from nonroutine corrective maintenance

Electrical Inst., Mechanized Equip , Pluggage/Caking, and Corrosion N/A for most tests due to size of tests

ALTERNATIVE 1

Module Name SOLIDS/LIQUIDS SEPARATION

MISHAP RISK PARAMETERS	Large Pilot Plant For Hot Functional Testing	Small Scale Integrated Pilot Plant	Small Scale Functional Hot Pilot Plant	Bench Scale Hot Test	Lab Scale Hot Tests	Bench Scale Simulants and Tracers	Lab Scale Simulants and Tracers	Pilot Scale Simulant Tests	Large Scale and Full Scale Equip. Tests	Full Scale Hot Demonstration or Process Test	Module Number
Designation:	HL	HL	HL	HL	LL	Cold	Cold	Cold	Cold	HL	
MAXIMUM ACCIDENT MISHAP RISK											LIMITING EVENT
Consequence:	5	N/A	N/A	5	5	1	1	1	5	5	
Frequency:	0.001	N/A	N/A	0.0001	0.0001	0 0001	0.0001	0.0001	0.0001	0.001	
Risk:	0 005			0.0005	0.0005	0.0001	0.0001	0.0001	0.0005	0.005	0.005
NONROUTINE MAINTENANCE MISHAP RISKS											SUM OF EVENTS
Electrical Instrumentation											
Consequence:	5	N/A	N/A	N/A	N/A	N/A	N/A	1	1	5	
Frequency:	0.01	N/A	N/A	N/A	N/A	N/A	N/A	0.001	0.01	0.01	
Risk:	0.05							0 001	0.01	0.05	0.111
Mechanized Equipment											
Consequence:	5	N/A	N/A	N/A	N/A	N/A	N/A	1	1	5	
Frequency:	0.01	N/A	N/A	N/A	N/A	N/A	N/A	0.001	0 01	0.01	
Risk:	0.05							0.001	0 01	0.05	0.111
Pluggage/Caking											
Consequence:	5	N/A	N/A	N/A	N/A	N/A	N/A	1	5	25	
Frequency:	0.1	N/A	N/A	N/A	N/A	N/A	N/A	0.01	0.1	0.1	
Risk:	0.5							0.01	0.5	2.5	3 51
Corrosion											
Consequence:	5	N/A	N/A	N/A	N/A	N/A	N/A	1	1	5	
Frequency:	0.01	N/A	N/A	N/A	N/A	N/A	N/A	0.0001	0.01	0.01	
Risk:	0.05							0.0001	0.01	0.05	0.1101
Physical Operation											
Consequence:	5	N/A	N/A	1	1	1	1	1	1	5	
Frequency:	0.001	N/A	N/A	0.0001	0.0001	0.0001	0.0001	0.0001	0.0001	0.001	
Risk:	0.005			0.0001	0.0001	0.0001	0.0001	0.0001	0.0001	0 005	0 0106
TOTAL NONROUTINE MAINTENANCE MISHAP RISK Risk:	0.655			0.0001	0.0001	0.0001	0.0001	0.0122	0.5301	2.655	3 8527

Notes:

Accident mishap risks are energy release events with the potential to 1) release contamination within the facility and into the environment, 2) damage the equipment and facility, and 3) physically injure workers. These events could include explosion, fire, pressure release, etc.

Nonroutine maintenance mishap risks are low energy events with limited potential for releasing contaminants from process systems. These events will lead to increased worker exposures resulting from nonroutine corrective maintenance.

Electrical Inst., Mechanized Equip , Pluggage/Caking, and Corrosion N/A for most tests due to size of tests

ALTERNATIVE 1

Module Name CESIUM ION EXCHANGE

MISHAP RISK PARAMETERS	Large Pilot Plant For Hot Functional Testing	Small Scale Integrated Pilot Plant	Small Scale Functional Hot Pilot Plant	Bench Scale Hot Test	Lab Scale Hot Tests	Bench Scale Simulants and Tracers	Lab Scale Simulants and Tracers	Pilot Scale Simulant Tests	Large Scale and Full Scale Equip. Tests	Full Scale Hot Demonstration or Process Test	Module Number
Designation:	HL	HL	HL	HL	LL	Cold	Cold	Cold	Cold	HL	
MAXIMUM ACCIDENT MISHAP RISK											**LIMITING EVENT**
Consequence:	100	N/A	N/A	5	5	5	1	5	25	100	
Frequency:	0.001	N/A	N/A	0.001	0 001	0.001	0.0001	0.001	0.001	0.001	
Risk:	0.1			0.005	0.005	0.005	0.0001	0 005	0.025	0.1	0.1
NONROUTINE MAINTENANCE MISHAP RISKS											**SUM OF EVENTS**
Electrical Instrumentation											
Consequence:	5	N/A	N/A	N/A	N/A	N/A	N/A	1	1	5	
Frequency:	0.001	N/A	N/A	N/A	N/A	N/A	N/A	0 0001	0 001	0 001	
Risk:	0.005							0 0001	0.001	0.005	0.0111
Mechanized Equipment											
Consequence:	5	N/A	N/A	N/A	N/A	N/A	N/A	1	1	5	
Frequency:	0.001	N/A	N/A	N/A	N/A	N/A	N/A	0.0001	0.001	0.001	
Risk:	0.005							0.0001	0.001	0 005	0 0111
Pluggage/Caking											
Consequence:	5	N/A	N/A	N/A	N/A	N/A	N/A	1	1	5	
Frequency:	0.01	N/A	N/A	N/A	N/A	N/A	N/A	0.0001	0.01	0 01	
Risk:	0.05							0.0001	0 01	0 05	0 1101
Corrosion											
Consequence:	5	N/A	N/A	N/A	N/A	N/A	N/A	1	1	5	
Frequency:	0.001	N/A	N/A	N/A	N/A	N/A	N/A	0.0001	0.01	0.01	
Risk:	0.005							0.0001	0.01	0 05	0.0651
Physical Operation											
Consequence:	1	N/A	N/A	1	1	1	1	1	1	5	
Frequency:	0.0001	N/A	N/A	0.001	0.001	0.001	0 0001	0 0001	0.001	0 001	
Risk:	0.0001			0.001	0 001	0.001	0.0001	0 0001	0.001	0 005	0.0093
TOTAL NONROUTINE MAINTENANCE MISHAP RISK											
Risk:	0.0651			0.001	0.001	0.001	0.0001	0.0005	0.023	0.115	0 2067

Notes.

Accident mishap risks are energy release events with the potential to 1) release contamination within the facility and into the environment, 2) damage the equipment and facility, and 3) physically injure workers. These events could include explosion, fire, pressure release, etc.

Nonroutine maintenance mishap risks are low energy events with limited potential for releasing contaminants from process systems. These events will lead to increased worker exposures resulting from nonroutine corrective maintenance.

Electrical Inst., Mechanized Equip , Pluggage/Caking, and Corrosion N/A for most tests due to size of tests.

ALTERNATIVE 1

Module Name LOW LEVEL WASTE VITRIFICATION

MISHAP RISK PARAMETERS	Large Pilot Plant For Hot Functional Testing	Small Scale Integrated Pilot Plant	Small Scale Functional Hot Pilot Plant	Bench Scale Hot Test	Lab Scale Hot Tests	Bench Scale Simulants and Tracers	Lab Scale Simulants and Tracers	Pilot Scale Simulant Tests	Large Scale and Full Scale Equip. Tests	Full Scale Hot Demonstration or Process Test	Module Number
Designation:	LL	LL	LL	LL	LL	Cold	Cold	Cold	Cold	LL	
MAXIMUM ACCIDENT MISHAP RISK											**LIMITING EVENT**
Consequence:	N/A	N/A	25	5	5	1	1	5	25	100	
Frequency:	N/A	N/A	0.01	0.01	0.01	0.01	0.001	0.01	0.1	0.1	
Risk:			0.25	0.05	0.05	0.01	0.001	0.05	2.5	10	10
NONROUTINE MAINTENANCE MISHAP RISKS											**SUM OF EVENTS**
Electrical Instrumentation											
Consequence:	N/A	N/A	5	N/A	N/A	N/A	N/A	5	5	25	
Frequency:	N/A	N/A	0.01	N/A	N/A	N/A	N/A	0.01	0.1	0.1	
Risk:			0.05					0.05	0.5	2.5	3.1
Mechanized Equipment											
Consequence:	N/A	N/A	1	N/A	N/A	N/A	N/A	1	1	5	
Frequency:	N/A	N/A	0.01	N/A	N/A	N/A	N/A	0.0001	0.01	0.1	
Risk:			0.01					0.0001	0.01	0.5	0.5201
Pluggage/Caking											
Consequence:	N/A	N/A	5	N/A	N/A	N/A	N/A	5	5	5	
Frequency:	N/A	N/A	0.01	N/A	N/A	N/A	N/A	0.01	0.1	0.1	
Risk:			0.05					0.05	0.5	0.5	1.1
Corrosion											
Consequence:	N/A	N/A	1	N/A	N/A	N/A	N/A	1	1	5	
Frequency:	N/A	N/A	0.01	N/A	N/A	N/A	N/A	0.0001	0.01	0.01	
Risk:			0.01					0.0001	0.01	0.05	0.0701
Physical Operation											
Consequence:	N/A	N/A	1	1	1	1	1	1	1	5	
Frequency:	N/A	N/A	0.0001	0.0001	0.0001	0.0001	0.0001	0.0001	0.001	0.001	
Risk:			0.0001	0.0001	0.0001	0.0001	0.0001	0.0001	0.001	0.005	0.0050
TOTAL NONROUTINE MAINTENANCE MISHAP RISK											
Risk:			0.1201	0.0001	0.0001	0.0001	0.0001	0.1003	1.021	3.555	4.7968

Notes:

Accident mishap risks are energy release events with the potential to 1) release contamination within the facility and into the environment, 2) damage the equipment and facility, and 3) physically injure workers. These events could include explosion, fire, pressure release, etc.

Nonroutine maintenance mishap risks are low energy events with limited potential for releasing contaminants from process systems. These events will lead to increased worker exposures resulting from nonroutine corrective maintenance.

Electrical Inst , Mechanized Equip., Pluggage/Caking, and Corrosion N/A for most tests due to size of tests

ALTERNATIVE 1

Module Name **HIGH LEVEL WASTE VITRIFICATION**

MISHAP RISK PARAMETERS	Large Pilot Plant For Hot Functional Testing	Small Scale Integrated Pilot Plant	Small Scale Functional Hot Pilot Plant	Bench Scale Hot Test	Lab Scale Hot Tests	Bench Scale Simulants and Tracers	Lab Scale Simulants and Tracers	Pilot Scale Simulant Tests	Large Scale and Full Scale Equip Tests	Full Scale Hot Demonstration or Process Test	Module Number
Designation:	HL	HL	HL	HL	LL	Cold	Cold	Cold	Cold	HL	
MAXIMUM ACCIDENT MISHAP RISK											**LIMITING EVENT**
Consequence:	100	N/A	N/A	5	5	1	1	5	25	100	
Frequency:	0.1	N/A	N/A	0 01	0 01	0 01	0 001	0 01	0 1	0.1	
Risk:	10			0.05	0.05	0.01	0.001	0.05	2 5	10	10
NONROUTINE MAINTENANCE MISHAP RISKS											**SUM OF EVENTS**
Electrical Instrumentation											
Consequence:	5	N/A	N/A	N/A	N/A	N/A	N/A	5	5	25	
Frequency:	0.1	N/A	N/A	N/A	N/A	N/A	N/A	0.01	0.1	0.1	
Risk:	0.5							0.05	0.5	2 5	3 55
Mechanized Equipment											
Consequence:	5	N/A	N/A	N/A	N/A	N/A	N/A	1	1	5	
Frequency:	0.01	N/A	N/A	N/A	N/A	N/A	N/A	0.0001	0.01	0.01	
Risk:	0.05							0 0001	0.01	0.05	0 1101
Pluggage/Caking											
Consequence:	5	N/A	N/A	N/A	N/A	N/A	N/A	1	5	5	
Frequency:	0.1	N/A	N/A	N/A	N/A	N/A	N/A	0 0001	0.01	0.1	
Risk:	0.5							0 0001	0 05	0.1	0 6501
Corrosion											
Consequence:	5	N/A	N/A	N/A	N/A	N/A	N/A	1	1	5	
Frequency:	0.01	N/A	N/A	N/A	N/A	N/A	N/A	0.0001	0 01	0 01	
Risk:	0 05							0 0001	0.01	0 05	0.1101
Physical Operation											
Consequence:	1	N/A	N/A	1	1	1	1	1	1	5	
Frequency:	0.001	N/A	N/A	0.0001	0.0001	0.0001	0 0001	0.0001	0.001	0 001	
Risk:	0 001			0 0001	0.0001	0 0001	0 0001	0 0001	0 001	0 005	0 0075
TOTAL NONROUTINE MAINTENANCE MISHAP RISK											
Risk:	1.101			0.0001	0.0001	0 0001	0 0001	0 0504	0.571	2.705	4 4278

Notes:

Accident mishap risks are energy release events with the potential to 1) release contamination within the facility and into the environment, 2) damage the equipment and facility, and 3) physically injure workers. These events could include explosion, fire, pressure release, etc.

Nonroutine maintenance mishap risks are low energy events with limited potential for releasing contaminants from process systems. These events will lead to increased worker exposures resulting from nonroutine corrective maintenance.

Electrical Inst , Mechanized Equip., Pluggage/Caking, and Corrosion N/A for most tests due to size of tests.

ALTERNATIVE 2

Module Name RETRIEVAL

MISHAP RISK PARAMETERS	Large Pilot Plant For Hot Functional Testing	Small Scale Integrated Pilot Plant	Small Scale Functional Hot Pilot Plant	Bench Scale Hot Test	Lab Scale Hot Tests	Bench Scale Simulants and Tracers	Lab Scale Simulants and Tracers	Pilot Scale Simulant Tests	Large Scale and Full Scale Equip. Tests	Full Scale Hot Demonstration or Process Test	Module Number
Designation:	HL	HL	HL	HL	LL	Cold	Cold	Cold	Cold	HL	
MAXIMUM ACCIDENT MISHAP RISK											**LIMITING EVENT**
Consequence:	N/A	N/A	N/A	N/A	N/A	N/A	N/A	N/A	25	25	
Frequency:	N/A	N/A	N/A	N/A	N/A	N/A	N/A	N/A	0.01	0.1	
Risk:									0.25	2.5	2.5
NONROUTINE MAINTENANCE MISHAP RISKS											**SUM OF EVENTS**
Electrical Instrumentation											
Consequence:	N/A	N/A	N/A	N/A	N/A	N/A	N/A	N/A	1	5	
Frequency:	N/A	N/A	N/A	N/A	N/A	N/A	N/A	N/A	0.001	0.001	
Risk:									0.001	0.005	0.006
Mechanized Equipment											
Consequence:	N/A	N/A	N/A	N/A	N/A	N/A	N/A	N/A	1	5	
Frequency:	N/A	N/A	N/A	N/A	N/A	N/A	N/A	N/A	0.001	0.001	
Risk:									0.001	0.005	0.006
Pluggage/Caking											
Consequence:	N/A	N/A	N/A	N/A	N/A	N/A	N/A	N/A	1	5	
Frequency:	N/A	N/A	N/A	N/A	N/A	N/A	N/A	N/A	0.01	0.01	
Risk:									0.01	0.05	0.06
Corrosion											
Consequence:	N/A	N/A	N/A	N/A	N/A	N/A	N/A	N/A	1	5	
Frequency:	N/A	N/A	N/A	N/A	N/A	N/A	N/A	N/A	0.001	0.001	
Risk:									0.001	0.005	0.006
Physical Operation											
Consequence:	N/A	N/A	N/A	N/A	N/A	N/A	N/A	N/A	1	5	
Frequency:	N/A	N/A	N/A	N/A	N/A	N/A	N/A	N/A	0.001	0.001	
Risk:									0.001	0.005	0.006
TOTAL NONROUTINE MAINTENANCE MISHAP RISK											
Risk:									0.014	0.07	0.084

Notes:

Accident mishap risks are energy release events with the potential to 1) release contamination within the facility and into the environment, 2) damage the equipment and facility, and 3) physically injure workers These events could include explosion, fire, pressure release, etc.

Nonroutine maintenance mishap risks are low energy events with limited potential for releasing contaminants from process systems. These events will lead to increased worker exposures resulting from nonroutine corrective maintenance.

Electrical Inst., Mechanized Equip., Pluggage/Caking, and Corrosion N/A for most tests due to size of tests

ALTERNATIVE 2

Module Name SLUDGE WASHING

MISHAP RISK PARAMETERS	Large Pilot Plant For Hot Functional Testing	Small Scale Integrated Pilot Plant	Small Scale Functional Hot Pilot Plant	Bench Scale Hot Test	Lab Scale Hot Tests	Bench Scale Simulants and Tracers	Lab Scale Simulants and Tracers	Pilot Scale Simulant Tests	Large Scale and Full Scale Equip. Tests	Full Scale Hot Demonstration or Process Test	Module Number
Designation:	HL	HL	HL	HL	LL	Cold	Cold	Cold	Cold	HL	
MAXIMUM ACCIDENT MISHAP RISK											**LIMITING EVENT**
Consequence:	N/A	5	N/A	5	5	N/A	N/A	1	5	5	
Frequency:	N/A	0 001	N/A	0 0001	0 0001	N/A	N/A	0 0001	0.0001	0.01	
Risk:		0 005		0.0005	0.0005			0.0001	0.0005	0.05	0 05
NONROUTINE MAINTENANCE MISHAP RISKS											**SUM OF EVENTS**
Electrical Instrumentation											
Consequence:	N/A	1	N/A	N/A	N/A	N/A	N/A	1	1	5	
Frequency:	N/A	0 01	N/A	N/A	N/A	N/A	N/A	0 001	0 01	0 01	
Risk:		0.01						0.001	0 01	0 05	0.071
Mechanized Equipment											
Consequence:	N/A	1	N/A	N/A	N/A	N/A	N/A	1	1	5	
Frequency:	N/A	0.01	N/A	N/A	N/A	N/A	N/A	0.001	0.01	0 01	
Risk:		0.01						0.001	0 01	0.05	0 071
Pluggage/Caking											
Consequence:	N/A	5	N/A	N/A	N/A	N/A	N/A	5	5	25	
Frequency:	N/A	0 1	N/A	N/A	N/A	N/A	N/A	0.01	0 1	0.1	
Risk:		0.5						0.05	0.5	2.5	3.55
Corrosion											
Consequence:	N/A	1	N/A	N/A	N/A	N/A	N/A	1	1	5	
Frequency:	N/A	0 01	N/A	N/A	N/A	N/A	N/A	0.0001	0.01	0 01	
Risk:		0.01						0.0001	0.01	0.05	0.0701
Physical Operation											
Consequence:	N/A	5	N/A	1	1	N/A	N/A	1	1	5	
Frequency:	N/A	0.001	N/A	0.0001	0.0001	N/A	N/A	0.0001	0 001	0 001	
Risk:		0.005		0.0001	0.0001			0.0001	0 001	0 005	0.0113
TOTAL NONROUTINE MAINTENANCE MISHAP RISK											
Risk:		0.535		0.0001	0.0001			0.0522	0.531	2.655	3.7734

Notes:

Accident mishap risks are energy release events with the potential to 1) release contamination within the facility and into the environment, 2) damage the equipment and facility, and 3) physically injure workers. These events could include explosion, fire, pressure release, etc.

Nonroutine maintenance mishap risks are low energy events with limited potential for releasing contaminants from process systems These events will lead to increased worker exposures resulting from nonroutine corrective maintenance.

Electrical Inst , Mechanized Equip , Pluggage/Caking, and Corrosion N/A for most tests due to size of tests

ALTERNATIVE 2

Module Name SOLIDS/LIQUIDS SEPARATION

MISHAP RISK PARAMETERS	Large Pilot Plant For Hot Functional Testing	Small Scale Integrated Pilot Plant	Small Scale Functional Hot Pilot Plant	Bench Scale Hot Test	Lab Scale Hot Tests	Bench Scale Simulants and Tracers	Lab Scale Simulants and Tracers	Pilot Scale Simulant Tests	Large Scale and Full Scale Equip. Tests	Full Scale Hot Demonstration or Process Test	Module Number
Designation:	HL	HL	HL	HL	LL	Cold	Cold	Cold	Cold	HL	
MAXIMUM ACCIDENT MISHAP RISK											LIMITING EVENT
Consequence:	N/A	5	N/A	5	5	1	1	1	5	5	
Frequency:	N/A	0.0001	N/A	0.0001	0.0001	0.0001	0.0001	0.0001	0.0001	0.001	
Risk:		0.0005		0.0005	0.0005	0.0001	0.0001	0.0001	0.0005	0.005	0.005
NONROUTINE MAINTENANCE MISHAP RISKS											SUM OF EVENTS
Electrical Instrumentation											
Consequence:	N/A	1	N/A	N/A	N/A	N/A	N/A	1	1	5	
Frequency:	N/A	0.01	N/A	N/A	N/A	N/A	N/A	0.001	0.01	0.01	
Risk:		0.01						0.001	0.01	0.05	0.071
Mechanized Equipment											
Consequence:	N/A	1	N/A	N/A	N/A	N/A	N/A	1	1	5	
Frequency:	N/A	0.01	N/A	N/A	N/A	N/A	N/A	0.001	0.01	0.01	
Risk:		0.01						0.001	0.01	0.05	0.071
Pluggage/Caking											
Consequence:	N/A	5	N/A	N/A	N/A	N/A	N/A	1	5	25	
Frequency:	N/A	0.1	N/A	N/A	N/A	N/A	N/A	0.01	0.1	0.1	
Risk:		0.5						0.01	0.5	2.5	3.51
Corrosion											
Consequence:	N/A	1	N/A	N/A	N/A	N/A	N/A	1	1	5	
Frequency:	N/A	0.01	N/A	N/A	N/A	N/A	N/A	0.0001	0.01	0.01	
Risk:		0.01						0.0001	0.01	0.05	0.0701
Physical Operation											
Consequence:	N/A	1	N/A	1	1	1	1	1	1	5	
Frequency:	N/A	0.0001	N/A	0.0001	0.0001	0.0001	0.0001	0.0001	0.0001	0.001	
Risk:		0.0001		0.0001	0.0001	0.0001	0.0001	0.0001	0.0001	0.005	0.0057
TOTAL NONROUTINE MAINTENANCE MISHAP RISK											
Risk:		0.5301		0.0001	0.0001	0.0001	0.0001	0.0122	0.5301	2.655	3.7278

Notes:

Accident mishap risks are energy release events with the potential to 1) release contamination within the facility and into the environment, 2) damage the equipment and facility, and 3) physically injure workers. These events could include explosion, fire, pressure release, etc.

Nonroutine maintenance mishap risks are low energy events with limited potential for releasing contaminants from process systems. These events will lead to increased worker exposures resulting from nonroutine corrective maintenance.

Electrical Inst , Mechanized Equip , Pluggage/Caking, and Corrosion N/A for most tests due to size of tests.

ALTERNATIVE 2

Module Name CESIUM ION EXCHANGE

MISHAP RISK PARAMETERS	Large Pilot Plant For Hot Functional Testing	Small Scale Integrated Pilot Plant	Small Scale Functional Hot Pilot Plant	Bench Scale Hot Test	Lab Scale Hot Tests	Bench Scale Simulants and Tracers	Lab Scale Simulants and Tracers	Pilot Scale Simulant Tests	Large Scale and Full Scale Equip. Tests	Full Scale Hot Demonstration or Process Test	Module Number
Designation:	HL	HL	HL	HL	LL	Cold	Cold	Cold	Cold	HL	
MAXIMUM ACCIDENT MISHAP RISK											LIMITING EVENT
Consequence:	N/A	25	N/A	5	5	5	1	5	25	100	
Frequency:	N/A	0.001	N/A	0.001	0.001	0.001	0.0001	0.001	0.001	0 001	
Risk:		0.025		0 005	0 005	0 005	0.0001	0 005	0.025	0.1	0 1
NONROUTINE MAINTENANCE MISHAP RISKS											SUM OF EVENTS
Electrical Instrumentation											
Consequence:	N/A	1	N/A	N/A	N/A	N/A	N/A	1	1	5	
Frequency:	N/A	0 001	N/A	N/A	N/A	N/A	N/A	0 0001	0 001	0.001	
Risk:		0.001						0.0001	0.001	0.005	0.0071
Mechanized Equipment											
Consequence.	N/A	1	N/A	N/A	N/A	N/A	N/A	1	1	5	
Frequency:	N/A	0.001	N/A	N/A	N/A	N/A	N/A	0.0001	0.001	0.001	
Risk:		0.001						0.0001	0.001	0.005	0.0071
Pluggage/Caking											
Consequence:	N/A	1	N/A	N/A	N/A	N/A	N/A	1	1	5	
Frequency:	N/A	0 001	N/A	N/A	N/A	N/A	N/A	0.0001	0 01	0.01	
Risk:		0 001						0 0001	0.01	0 05	0.0611
Corrosion											
Consequence:	N/A	1	N/A	N/A	N/A	N/A	N/A	1	1	5	
Frequency:	N/A	0 001	N/A	N/A	N/A	N/A	N/A	0.0001	0 01	0 01	
Risk:		0 001						0.0001	0 01	0.05	0.0611
Physical Operation											
Consequence:	N/A	1	N/A	1	1	1	1	1	1	5	
Frequency:	N/A	0.0001	N/A	0.001	0 001	0.001	0 0001	0.0001	0.001	0.001	
Risk:		0.0001		0.001	0.001	0 001	0 0001	0 0001	0.001	0 005	0 0093
TOTAL NONROUTINE MAINTENANCE MISHAP RISK Risk:		0.0041		0.001	0.001	0.001	0.0001	0.0005	0.023	0.115	0.1457

Notes:

Accident mishap risks are energy release events with the potential to 1) release contamination within the facility and into the environment, 2) damage the equipment and facility, and 3) physically injure workers. These events could include explosion, fire, pressure release, etc.

Nonroutine maintenance mishap risks are low energy events with limited potential for releasing contaminants from process systems These events will lead to increased worker exposures resulting from nonroutine corrective maintenance.

Electrical Inst , Mechanized Equip , Pluggage/Caking, and Corrosion N/A for most tests due to size of tests

ALTERNATIVE 2

Module Name LOW LEVEL WASTE VITRIFICATION

MISHAP RISK PARAMETERS	Large Pilot Plant For Hot Functional Testing	Small Scale Integrated Pilot Plant	Small Scale Functional Hot Pilot Plant	Bench Scale Hot Test	Lab Scale Hot Tests	Bench Scale Simulants and Tracers	Lab Scale Simulants and Tracers	Pilot Scale Simulant Tests	Large Scale and Full Scale Equip. Tests	Full Scale Hot Demonstration or Process Test	Module Number
Designation:	LL	LL	LL	LL	LL	Cold	Cold	Cold	Cold	LL	
MAXIMUM ACCIDENT MISHAP RISK											**LIMITING EVENT**
Consequence:	N/A	N/A	N/A	5	5	1	1	5	25	100	
Frequency:	N/A	N/A	N/A	0.01	0.01	0 01	0 001	0.01	0.1	0.1	
Risk:				0 05	0.05	0 01	0.001	0.05	2.5	10	10
NONROUTINE MAINTENANCE MISHAP RISKS											**SUM OF EVENTS**
Electrical Instrumentation											
Consequence:	N/A	N/A	N/A	N/A	N/A	N/A	N/A	5	5	25	
Frequency:	N/A	N/A	N/A	N/A	N/A	N/A	N/A	0 01	0.1	0.1	
Risk:								0.05	0.5	2.5	3 05
Mechanized Equipment											
Consequence:	N/A	N/A	N/A	N/A	N/A	N/A	N/A	1	1	5	
Frequency:	N/A	N/A	N/A	N/A	N/A	N/A	N/A	0 0001	0.01	0.1	
Risk:								0.0001	0 01	0.5	0.5101
Pluggage/Caking											
Consequence:	N/A	N/A	N/A	N/A	N/A	N/A	N/A	5	5	5	
Frequency:	N/A	N/A	N/A	N/A	N/A	N/A	N/A	0.01	0.1	0.1	
Risk:								0.05	0.5	0 5	1 05
Corrosion											
Consequence:	N/A	N/A	N/A	N/A	N/A	N/A	N/A	1	1	5	
Frequency:	N/A	N/A	N/A	N/A	N/A	N/A	N/A	0 0001	0 01	0.01	
Risk:								0.0001	0.01	0.05	0 0601
Physical Operation											
Consequence:	N/A	N/A	N/A	1	1	1	1	1	1	5	
Frequency:	N/A	N/A	N/A	0.0001	0 0001	0.0001	0 0001	0.0001	0.001	0.001	
Risk:				0.0001	0.0001	0 0001	0.0001	0.0001	0.001	0.005	0 0065
TOTAL NONROUTINE MAINTENANCE MISHAP RISK Risk:				0.0001	0.0001	0.0001	0.0001	0.1003	1.021	3.555	4.6767

Notes:

Accident mishap risks are energy release events with the potential to 1) release contamination within the facility and into the environment, 2) damage the equipment and facility, and 3) physically injure workers. These events could include explosion, fire, pressure release, etc.

Nonroutine maintenance mishap risks are low energy events with limited potential for releasing contaminants from process systems. These events will lead to increased worker exposures resulting from nonroutine corrective maintenance.

Electrical Inst , Mechanized Equip., Pluggage/Caking, and Corrosion N/A for most tests due to size of tests

ALTERNATIVE 2

Module Name HIGH LEVEL WASTE VITRIFICATION

MISHAP RISK PARAMETERS	Large Pilot Plant For Hot Functional Testing	Small Scale Integrated Pilot Plant	Small Scale Functional Hot Pilot Plant	Bench Scale Hot Test	Lab Scale Hot Tests	Bench Scale Simulants and Tracers	Lab Scale Simulants and Tracers	Pilot Scale Simulant Tests	Large Scale and Full Scale Equip. Tests	Full Scale Hot Demonstration or Process Test	Module Number
Designation:	HL	HL	HL	HL	LL	Cold	Cold	Cold	Cold	HL	
MAXIMUM ACCIDENT MISHAP RISK											**LIMITING EVENT**
Consequence:	N/A	25	N/A	5	5	1	1	5	25	100	
Frequency:	N/A	0.1	N/A	0.01	0.01	0 01	0.001	0.01	0.1	0.1	
Risk:		2.5		0.05	0.05	0 01	0.001	0 05	2.5	10	10
NONROUTINE MAINTENANCE MISHAP RISKS											**SUM OF EVENTS**
Electrical Instrumentation											
Consequence:	N/A	5	N/A	N/A	N/A	N/A	N/A	5	5	25	
Frequency:	N/A	0.1	N/A	N/A	N/A	N/A	N/A	0 01	0.1	0.1	
Risk:		0.5						0.05	0 5	2.5	3.55
Mechanized Equipment											
Consequence:	N/A	5	N/A	N/A	N/A	N/A	N/A	1	1	5	
Frequency:	N/A	0 01	N/A	N/A	N/A	N/A	N/A	0 0001	0 01	0 01	
Risk		0.05						0.0001	0 01	0 05	0 1101
Pluggage/Caking											
Consequence:	N/A	5	N/A	N/A	N/A	N/A	N/A	1	5	5	
Frequency:	N/A	0.01	N/A	N/A	N/A	N/A	N/A	0 0001	0 01	0 1	
Risk:		0.05						0 0001	0.05	0 1	0 2001
Corrosion											
Consequence:	N/A	5	N/A	N/A	N/A	N/A	N/A	1	1	5	
Frequency:	N/A	0.01	N/A	N/A	N/A	N/A	N/A	0.0001	0.01	0.01	
Risk:		0 05						0.0001	0.01	0.05	0.1101
Physical Operation											
Consequence:	N/A	1	N/A	1	1	1	1	1	1	5	
Frequency:	N/A	0.0001	N/A	0.0001	0.0001	0.0001	0.0001	0.0001	0.001	0.001	
Risk:		0.0001		0.0001	0.0001	0.0001	0.0001	0.0001	0.001	0 005	0.0066
TOTAL NONROUTINE MAINTENANCE MISHAP RISK											
Risk:		0.6501		0.0001	0.0001	0.0001	0.0001	0.0504	0.571	2.705	3 9769

Notes:

Accident mishap risks are energy release events with the potential to 1) release contamination within the facility and into the environment, 2) damage the equipment and facility, and 3) physically injure workers. These events could include explosion, fire, pressure release, etc.

Nonroutine maintenance mishap risks are low energy events with limited potential for releasing contaminants from process systems These events will lead to increased worker exposures resulting from nonroutine corrective maintenance.

Electrical Inst., Mechanized Equip , Pluggage/Caking, and Corrosion N/A for most tests due to size of tests.

ALTERNATIVE 3

Module Name RETRIEVAL

MISHAP RISK PARAMETERS	Large Pilot Plant For Hot Functional Testing	Small Scale Integrated Pilot Plant	Small Scale Functional Hot Pilot Plant	Bench Scale Hot Test	Lab Scale Hot Tests	Bench Scale Simulants and Tracers	Lab Scale Simulants and Tracers	Pilot Scale Simulant Tests	Large Scale and Full Scale Equip. Tests	Full Scale Hot Demonstration or Process Test	Module Number
Designation:	HL	HL	HL	HL	LL	Cold	Cold	Cold	Cold	HL	
MAXIMUM ACCIDENT MISHAP RISK											**LIMITING EVENT**
Consequence:	N/A	N/A	N/A	N/A	N/A	N/A	N/A	N/A	25	25	
Frequency:	N/A	N/A	N/A	N/A	N/A	N/A	N/A	N/A	0 01	0.1	
Risk:									0.25	2 5	2 5
NONROUTINE MAINTENANCE MISHAP RISKS											**SUM OF EVENTS**
Electrical Instrumentation											
Consequence:	N/A	N/A	N/A	N/A	N/A	N/A	N/A	N/A	1	5	
Frequency:	N/A	N/A	N/A	N/A	N/A	N/A	N/A	N/A	0.001	0.001	
Risk:									0.001	0 005	0.006
Mechanized Equipment											
Consequence:	N/A	N/A	N/A	N/A	N/A	N/A	N/A	N/A	1	5	
Frequency:	N/A	N/A	N/A	N/A	N/A	N/A	N/A	N/A	0.001	0.001	
Risk:									0.001	0.005	0 006
Pluggage/Caking											
Consequence:	N/A	N/A	N/A	N/A	N/A	N/A	N/A	N/A	1	5	
Frequency:	N/A	N/A	N/A	N/A	N/A	N/A	N/A	N/A	0 01	0 01	
Risk:									0.01	0 05	0 06
Corrosion											
Consequence:	N/A	N/A	N/A	N/A	N/A	N/A	N/A	N/A	1	5	
Frequency:	N/A	N/A	N/A	N/A	N/A	N/A	N/A	N/A	0.001	0.001	
Risk:									0.001	0 005	0 006
Physical Operation											
Consequence:	N/A	N/A	N/A	N/A	N/A	N/A	N/A	N/A	1	5	
Frequency:	N/A	N/A	N/A	N/A	N/A	N/A	N/A	N/A	0.001	0 001	
Risk:									0.001	0.005	0 006
TOTAL NONROUTINE MAINTENANCE MISHAP RISK											
Risk:									0 014	0.07	0 084

Notes:

Accident mishap risks are energy release events with the potential to 1) release contamination within the facility and into the environment, 2) damage the equipment and facility, and 3) physically injure workers. These events could include explosion, fire, pressure release, etc.

Nonroutine maintenance mishap risks are low energy events with limited potential for releasing contaminants from process systems. These events will lead to increased worker exposures resulting from nonroutine corrective maintenance.

Electrical Inst., Mechanized Equip , Pluggage/Caking, and Corrosion N/A for most tests due to size of tests.

ALTERNATIVE 3

Module Name SLUDGE WASHING

MISHAP RISK PARAMETERS	Large Pilot Plant For Hot Functional Testing	Small Scale Integrated Pilot Plant	Small Scale Functional Hot Pilot Plant	Bench Scale Hot Test	Lab Scale Hot Tests	Bench Scale Simulants and Tracers	Lab Scale Simulants and Tracers	Pilot Scale Simulant Tests	Large Scale and Full Scale Equip. Tests	Full Scale Hot Demonstration or Process Test	Module Number
Designation:	HL	HL	HL	HL	LL	Cold	Cold	Cold	Cold	HL	
MAXIMUM ACCIDENT MISHAP RISK											**LIMITING EVENT**
Consequence:	N/A	N/A	5	5	5	N/A	N/A	1	5	5	
Frequency:	N/A	N/A	0.0001	0.0001	0.0001	N/A	N/A	0.0001	0.0001	0 01	
Risk:			0.0005	0.0005	0 0005			0.0001	0.0005	0.05	0 05
NONROUTINE MAINTENANCE MISHAP RISKS											**SUM OF EVENTS**
Electrical Instrumentation											
Consequence:	N/A	N/A	1	N/A	N/A	N/A	N/A	1	1	5	
Frequency:	N/A	N/A	0.001	N/A	N/A	N/A	N/A	0 001	0.01	0 01	
Risk:			0.001					0.001	0.01	0 05	0 062
Mechanized Equipment											
Consequence:	N/A	N/A	1	N/A	N/A	N/A	N/A	1	1	5	
Frequency:	N/A	N/A	0 001	N/A	N/A	N/A	N/A	0 001	0.01	0 01	
Risk:			0.001					0.001	0.01	0 05	0 062
Pluggage/Caking											
Consequence:	N/A	N/A	5	N/A	N/A	N/A	N/A	5	5	25	
Frequency:	N/A	N/A	0 01	N/A	N/A	N/A	N/A	0.01	0.1	0.1	
Risk:			0.05					0.05	0.5	2.5	3.1
Corrosion											
Consequence:	N/A	N/A	1	N/A	N/A	N/A	N/A	1	1	5	
Frequency:	N/A	N/A	0.001	N/A	N/A	N/A	N/A	0.0001	0.01	0.01	
Risk:			0.001					0 0001	0.01	0.05	0.0611
Physical Operation											
Consequence:	N/A	N/A	1	1	1	N/A	N/A	1	1	5	
Frequency:	N/A	N/A	0.001	0.0001	0.0001	N/A	N/A	0 0001	0.001	0 001	
Risk:			0.001	0.0001	0.0001			0 0001	0.001	0.005	0.0073
TOTAL NONROUTINE MAINTENANCE MISHAP RISK Risk:			0.054	0.0001	0 0001			0 0522	0.531	2.655	3.2924

Notes:

Accident mishap risks are energy release events with the potential to 1) release contamination within the facility and into the environment, 2) damage the equipment and facility, and 3) physically injure workers. These events could include explosion, fire, pressure release, etc.

Nonroutine maintenance mishap risks are low energy events with limited potential for releasing contaminants from process systems These events will lead to increased worker exposures resulting from nonroutine corrective maintenance.

Electrical Inst., Mechanized Equip , Pluggage/Caking, and Corrosion N/A for most tests due to size of tests.

ALTERNATIVE 3

Module Name SOLIDS/LIQUIDS SEPARATION

MISHAP RISK PARAMETERS	Large Pilot Plant For Hot Functional Testing	Small Scale Integrated Pilot Plant	Small Scale Functional Hot Pilot Plant	Bench Scale Hot Test	Lab Scale Hot Tests	Bench Scale Simulants and Tracers	Lab Scale Simulants and Tracers	Pilot Scale Simulant Tests	Large Scale and Full Scale Equip. Tests	Full Scale Hot Demonstration or Process Test	Module Number
Designation:	HL	HL	HL	HL	LL	Cold	Cold	Cold	Cold	HL	
MAXIMUM ACCIDENT MISHAP RISK											LIMITING EVENT
Consequence:	N/A	N/A	5	5	5	1	1	1	5	5	
Frequency:	N/A	N/A	0 0001	0.0001	0.0001	0 0001	0.0001	0.0001	0.0001	0.001	
Risk:			0.0005	0.0005	0.0005	0.0001	0.0001	0.0001	0.0005	0.005	0 005
NONROUTINE MAINTENANCE MISHAP RISKS											SUM OF EVENTS
Electrical Instrumentation											
Consequence:	N/A	N/A	1	N/A	N/A	N/A	N/A	1	1	5	
Frequency:	N/A	N/A	0.01	N/A	N/A	N/A	N/A	0.001	0.01	0.01	
Risk:			0.01					0.001	0.01	0.05	0.071
Mechanized Equipment											
Consequence:	N/A	N/A	1	N/A	N/A	N/A	N/A	1	1	5	
Frequency:	N/A	N/A	0.01	N/A	N/A	N/A	N/A	0.001	0.01	0.01	
Risk:			0.01					0.001	0 01	0.05	0 071
Pluggage/Caking											
Consequence:	N/A	N/A	5	N/A	N/A	N/A	N/A	1	5	25	
Frequency:	N/A	N/A	0.001	N/A	N/A	N/A	N/A	0 01	0.1	0.1	
Risk:			0.005					0.01	0.5	2.5	3.015
Corrosion											
Consequence:	N/A	N/A	1	N/A	N/A	N/A	N/A	1	1	5	
Frequency:	N/A	N/A	0.001	N/A	N/A	N/A	N/A	0.0001	0.01	0.01	
Risk:			0.001					0.0001	0.01	0 05	0 0611
Physical Operation											
Consequence:	N/A	N/A	1	1	1	1	1	1	1	5	
Frequency:	N/A	N/A	0.0001	0.0001	0.0001	0.0001	0 0001	0.0001	0.0001	0.001	
Risk:			0.0001	0.0001	0.0001	0.0001	0 0001	0.0001	0.0001	0 005	0.0057
TOTAL NONROUTINE MAINTENANCE MISHAP RISK											
Risk:			0.0261	0.0001	0 0001	0.0001	0 0001	0.0122	0.5301	2.655	3 2238

Notes:

Accident mishap risks are energy release events with the potential to 1) release contamination within the facility and into the environment, 2) damage the equipment and facility, and 3) physically injure workers. These events could include explosion, fire, pressure release, etc.

Nonroutine maintenance mishap risks are low energy events with limited potential for releasing contaminants from process systems. These events will lead to increased worker exposures resulting from nonroutine corrective maintenance.

Electrical Inst , Mechanized Equip., Pluggage/Caking, and Corrosion N/A for most tests due to size of tests

ALTERNATIVE 3

Module Name CESIUM ION EXCHANGE

MISHAP RISK PARAMETERS	Large Pilot Plant For Hot Functional Testing	Small Scale Integrated Pilot Plant	Small Scale Functional Hot Pilot Plant	Bench Scale Hot Test	Lab Scale Hot Tests	Bench Scale Simulants and Tracers	Lab Scale Simulants and Tracers	Pilot Scale Simulant Tests	Large Scale and Full Scale Equip. Tests	Full Scale Hot Demonstration or Process Test	Module Number
Designation:	HL	HL	HL	HL	LL	Cold	Cold	Cold	Cold	HL	
MAXIMUM ACCIDENT MISHAP RISK											LIMITING EVENT
Consequence:	N/A	N/A	25	5	5	5	1	5	25	100	
Frequency:	N/A	N/A	0.001	0.001	0 001	0 001	0 0001	0 001	0 001	0 001	
Risk:			0 025	0 005	0 005	0.005	0.0001	0.005	0.025	0.1	0.1
NONROUTINE MAINTENANCE MISHAP RISKS											SUM OF EVENTS
Electrical Instrumentation											
Consequence:	N/A	N/A	1	N/A	N/A	N/A	N/A	1	1	5	
Frequency:	N/A	N/A	0.001	N/A	N/A	N/A	N/A	0.0001	0 001	0.001	
Risk:			0.001					0 0001	0 001	0 005	0 0071
Mechanized Equipment											
Consequence:	N/A	N/A	1	N/A	N/A	N/A	N/A	1	1	5	
Frequency:	N/A	N/A	0.001	N/A	N/A	N/A	N/A	0.0001	0.001	0.001	
Risk:			0.001					0 0001	0.001	0.005	0 0071
Pluggage/Caking											
Consequence:	N/A	N/A	1	N/A	N/A	N/A	N/A	1	1	5	
Frequency:	N/A	N/A	0.001	N/A	N/A	N/A	N/A	0.0001	0.01	0 01	
Risk:			0.001					0 0001	0.01	0 05	0 0611
Corrosion											
Consequence:	N/A	N/A	1	N/A	N/A	N/A	N/A	1	1	5	
Frequency:	N/A	N/A	0.001	N/A	N/A	N/A	N/A	0 0001	0.01	0 01	
Risk:			0.001					0.0001	0.01	0.05	0 0611
Physical Operation											
Consequence:	N/A	N/A	1	1	1	1	1	1	1	5	
Frequency:	N/A	N/A	0.0001	0 001	0 001	0 001	0.0001	0.0001	0.001	0 001	
Risk:			0.0001	0.001	0.001	0.001	0.0001	0.0001	0.001	0 005	0 0093
TOTAL NONROUTINE MAINTENANCE MISHAP RISK											
Risk:			0 0041	0.001	0.001	0.001	0 0001	0.0005	0.023	0.115	0.1457

Notes.

Accident mishap risks are energy release events with the potential to 1) release contamination within the facility and into the environment, 2) damage the equipment and facility, and 3) physically injure workers. These events could include explosion, fire, pressure release, etc.

Nonroutine maintenance mishap risks are low energy events with limited potential for releasing contaminants from process systems. These events will lead to increased worker exposures resulting from nonroutine corrective maintenance.

Electrical Inst., Mechanized Equip , Pluggage/Caking, and Corrosion N/A for most tests due to size of tests.

ALTERNATIVE 3

Module Name LOW LEVEL WASTE VITRIFICATION

MISHAP RISK PARAMETERS	Large Pilot Plant For Hot Functional Testing	Small Scale Integrated Pilot Plant	Small Scale Functional Hot Pilot Plant	Bench Scale Hot Test	Lab Scale Hot Tests	Bench Scale Simulants and Tracers	Lab Scale Simulants and Tracers	Pilot Scale Simulant Tests	Large Scale and Full Scale Equip. Tests	Full Scale Hot Demonstration or Process Test	Module Number
Designation:	LL	LL	LL	LL	LL	Cold	Cold	Cold	Cold	LL	
MAXIMUM ACCIDENT MISHAP RISK											**LIMITING EVENT**
Consequence:	N/A	N/A	N/A	5	5	1	1	5	25	100	
Frequency:	N/A	N/A	N/A	0.01	0 01	0 01	0 001	0.01	0.1	0.1	
Risk:				0.05	0.05	0.01	0 001	0.05	2.5	10	10
NONROUTINE MAINTENANCE MISHAP RISKS											**SUM OF EVENTS**
Electrical Instrumentation											
Consequence:	N/A	N/A	N/A	N/A	N/A	N/A	N/A	5	5	25	
Frequency:	N/A	N/A	N/A	N/A	N/A	N/A	N/A	0.01	0.1	0.1	
Risk:								0 05	0 5	2.5	3.05
Mechanized Equipment											
Consequence:	N/A	N/A	N/A	N/A	N/A	N/A	N/A	1	1	5	
Frequency:	N/A	N/A	N/A	N/A	N/A	N/A	N/A	0.0001	0.01	0 1	
Risk:								0.0001	0.01	0 5	0 5101
Pluggage/Caking											
Consequence:	N/A	N/A	N/A	N/A	N/A	N/A	N/A	5	5	5	
Frequency:	N/A	N/A	N/A	N/A	N/A	N/A	N/A	0.01	0.1	0.1	
Risk:								0.05	0.5	0.5	1.05
Corrosion											
Consequence:	N/A	N/A	N/A	N/A	N/A	N/A	N/A	1	1	5	
Frequency:	N/A	N/A	N/A	N/A	N/A	N/A	N/A	0.0001	0.01	0.01	
Risk:								0.0001	0.01	0.05	0.0601
Physical Operation											
Consequence:	N/A	N/A	N/A	1	1	1	1	1	1	5	
Frequency:	N/A	N/A	N/A	0.0001	0.0001	0.0001	0.0001	0.0001	0.001	0.001	
Risk:				0.0001	0.0001	0.0001	0 0001	0.0001	0.001	0.005	0 0065
TOTAL NONROUTINE MAINTENANCE MISHAP RISK											
Risk:				0.0001	0.0001	0.0001	0.0001	0.1003	1.021	3.555	4.6767

Notes:

Accident mishap risks are energy release events with the potential to 1) release contamination within the facility and into the environment, 2) damage the equipment and facility, and 3) physically injure workers. These events could include explosion, fire, pressure release, etc.

Nonroutine maintenance mishap risks are low energy events with limited potential for releasing contaminants from process systems These events will lead to increased worker exposures resulting from nonroutine corrective maintenance.

Electrical Inst., Mechanized Equip., Pluggage/Caking, and Corrosion N/A for most tests due to size of tests.

ALTERNATIVE 3

Module Name HIGH LEVEL WASTE VITRIFICATION

MISHAP RISK PARAMETERS	Large Pilot Plant For Hot Functional Testing	Small Scale Integrated Pilot Plant	Small Scale Functional Hot Pilot Plant	Bench Scale Hot Test	Lab Scale Hot Tests	Bench Scale Simulants and Tracers	Lab Scale Simulants and Tracers	Pilot Scale Simulant Tests	Large Scale and Full Scale Equip Tests	Full Scale Hot Demonstration or Process Test	Module Number
Designation.	HL	HL	HL	HL	LL	Cold	Cold	Cold	Cold	HL	
MAXIMUM ACCIDENT MISHAP RISK											**LIMITING EVENT**
Consequence:	N/A	N/A	25	5	5	1	1	5	25	100	
Frequency:	N/A	N/A	0.01	0.01	0.01	0 01	0.001	0 01	0 1	0.1	
Risk:			0 25	0.05	0 05	0 01	0 001	0 05	2 5	10	10
NONROUTINE MAINTENANCE MISHAP RISKS											**SUM OF EVENTS**
Electrical Instrumentation											
Consequence:	N/A	N/A	5	N/A	N/A	N/A	N/A	5	5	25	
Frequency:	N/A	N/A	0 01	N/A	N/A	N/A	N/A	0 01	0.1	0.1	
Risk:			0.05					0 05	0.5	2.5	3.1
Mechanized Equipment											
Consequence:	N/A	N/A	1	N/A	N/A	N/A	N/A	1	1	5	
Frequency:	N/A	N/A	0.01	N/A	N/A	N/A	N/A	0.0001	0.01	0 01	
Risk:			0 01					0.0001	0 01	0 05	0.0701
Pluggage/Caking											
Consequence:	N/A	N/A	1	N/A	N/A	N/A	N/A	1	5	5	
Frequency:	N/A	N/A	0.01	N/A	N/A	N/A	N/A	0.0001	0.01	0 1	
Risk:			0.01					0.0001	0.05	0.1	0.1601
Corrosion											
Consequence:	N/A	N/A	1	N/A	N/A	N/A	N/A	1	1	5	
Frequency:	N/A	N/A	0.01	N/A	N/A	N/A	N/A	0 0001	0.01	0 01	
Risk:			0.01					0.0001	0.01	0.05	0.0701
Physical Operation											
Consequence:	N/A	N/A	1	1	1	1	1	1	1	5	
Frequency:	N/A	N/A	0.0001	0 0001	0 0001	0.0001	0.0001	0 0001	0.001	0.001	
Risk:			0 0001	0.0001	0.0001	0.0001	0.0001	0.0001	0.001	0.005	0 0066
TOTAL NONROUTINE MAINTENANCE MISHAP RISK											
Risk:			0.0801	0.0001	0.0001	0.0001	0.0001	0.0504	0 571	2.705	3.4069

Notes:

Accident mishap risks are energy release events with the potential to 1) release contamination within the facility and into the environment, 2) damage the equipment and facility, and 3) physically injure workers. These events could include explosion, fire, pressure release, etc.

Nonroutine maintenance mishap risks are low energy events with limited potential for releasing contaminants from process systems. These events will lead to increased worker exposures resulting from nonroutine corrective maintenance.

Electrical Inst., Mechanized Equip., Pluggage/Caking, and Corrosion N/A for most tests due to size of tests

APPENDIX D-4: ALTERNATIVE TESTING PROCESS MISHAP RISK SUMMARY

This page intentionally left blank.

BASELINE ALTERNATIVE
SUMMARY RISK DATA

	Large Pilot Plant For Hot Functional Testing	Small Scale Integrated Pilot Plant	Small Scale Functional Hot Pilot Plant	Bench Scale Hot Test	Lab Scale Hot Tests	Bench Scale Simulants and Tracers	Lab Scale Simulants and Tracers	Pilot Scale Simulant Tests	Large Scale and Full Scale Equip. Tests	Full Scale Hot Demonstration or Process Test	Totals
Accident Mishap Risk											
Retrieval	0	0	0	0	0	0	0	0	0.25	2.5	2.75
Pretreatment(1)	0	0	0	0.006	0.006	0.0051	0.0002	0.0052	0.026	0.155	0.2035
LLW Vitrification	0	0	0	0.05	0.05	0.01	0.001	0.05	2.5	10	12.661
HLW Vitrification	0	0	0	0.05	0.05	0.01	0.001	0.05	2.5	10	12.661
Totals	0	0	0	0.106	0.106	0.0251	0.0022	0.1052	5.276	22.655	28.2755
Nonrout. Maint. Mishap Risk											
Retrieval	0	0	0	0	0	0	0	0	0.014	0.07	0.084
Pretreatment(1)	0	0	0	0.0012	0.0012	0.0011	0.0002	0.0649	1.0841	5.425	6.5777
LLW Vitrification	0	0	0	0.0001	0.0001	0.0001	0.0001	0.1003	1.021	3.555	4.6767
HLW Vitrification	0	0	0	0.0001	0.0001	0.0001	0.0001	0.0504	0.571	2.705	3.3268
Totals	0	0	0	0.0014	0.0014	0.0013	0.0004	0.2156	2.6901	11.755	14.6652
Retrieval											
Accident Mishap Risk	0	0	0	0	0	0	0	0	0.25	2.5	2.75
Maint. Mishap Risk	0	0	0	0	0	0	0	0	0.014	0.07	0.084
Pretreatment(1)											
Accident Mishap Risk	0	0	0	0.006	0.006	0.0051	0.0002	0.0052	0.026	0.155	0.2035
Maint. Mishap Risk	0	0	0	0.0012	0.0012	0.0011	0.0002	0.0649	1.0841	5.425	6.5777
LLW Vitrification											
Accident Mishap Risk	0	0	0	0.05	0.05	0.01	0.001	0.05	2.5	10	12.661
Maint. Mishap Risk	0	0	0	0.0001	0.0001	0.0001	0.0001	0.1003	1.021	3.555	4.6767
HLW Vitrification											
Accident Mishap Risk	0	0	0	0.05	0.05	0.01	0.001	0.05	2.5	10	12.661
Maint. Mishap Risk	0	0	0	0.0001	0.0001	0.0001	0.0001	0.0504	0.571	2.705	3.3268
Total Accid. Mish. Risk	0	0	0	0.106	0.106	0.0251	0.0022	0.1052	5.276	22.655	28.2755
Total Maint. Mish. Risk	0	0	0	0.0014	0.0014	0.0013	0.0004	0.2156	2.6901	11.755	14.6652
Total Both Mish. Risks	0	0	0	0.1074	0.1074	0.0264	0.0026	0.3208	7.9661	34.41	42.9407

(1) Pretreatment phase combines risks of Sludge Washing, Solids/Liquid Separation, and Cesium Ion Exchange

ALTERNATIVE 1
SUMMARY RISK DATA

	Large Pilot Plant For Hot Functional Testing	Small Scale Integrated Pilot Plant	Small Scale Functional Hot Pilot Plant	Bench Scale Hot Test	Lab Scale Hot Tests	Bench Scale Simulants and Tracers	Lab Scale Simulants and Tracers	Pilot Scale Simulant Tests	Large Scale and Full Scale Equip Tests	Full Scale Hot Demonstration or Process Test	Totals
Accident Mishap Risk											
Retrieval	0	0	0	0	0	0	0	0	0 25	2 5	2.75
Pretreatment(1)	0.11	0	0	0.006	0 006	0 0051	0 0002	0 0052	0.026	0.155	0.3135
LLW Vitrification	0	0	0.25	0.05	0.05	0.01	0.001	0.05	2 5	10	12.911
HLW Vitrification	10	0	0	0 05	0.05	0 01	0.001	0 05	2.5	10	22.661
Totals	10.11	0	0.25	0.106	0.106	0.0251	0.0022	0.1052	5.276	22.655	38.6355
Nonrout. Maint. Mishap Risk											
Retrieval	0	0	0	0	0	0	0	0	0 014	0 07	0.084
Pretreatment(1)	1.3751	0	0	0 0012	0.0012	0 0011	0 0002	0 0649	1.0841	5 425	7.9528
LLW Vitrification	0	0	0.1201	0.0001	0 0001	0 0001	0 0001	0.1003	1.021	3 555	4.7968
HLW Vitrification	1.101	0	0	0.0001	0 0001	0 0001	0 0001	0 0504	0 571	2 705	4.4278
Totals	2.4761	0	0.1201	0.0014	0.0014	0.0013	0.0004	0.2156	2.6901	11.755	17.2614
Retrieval											
Accident Mishap Risk	0	0	0	0	0	0	0	0	0 25	2 5	2.75
Maint. Mishap Risk	0	0	0	0	0	0	0	0	0.014	0.07	0.084
Pretreatment(1)											
Accident Mishap Risk	0.11	0	0	0.006	0.006	0.0051	0 0002	0.0052	0 026	0 155	0.3135
Maint. Mishap Risk	1.3751	0	0	0 0012	0.0012	0.0011	0 0002	0 0649	1.0841	5 425	7.9528
LLW Vitrification											
Accident Mishap Risk	0	0	0.25	0.05	0.05	0 01	0 001	0.05	2 5	10	12.911
Maint. Mishap Risk	0	0	0.1201	0.0001	0.0001	0 0001	0.0001	0.1003	1 021	3.555	4.7968
HLW Vitrification											
Accident Mishap Risk	10	0	0	0 05	0 05	0 01	0 001	0.05	2 5	10	22.661
Maint. Mishap Risk	1.101	0	0	0.0001	0.0001	0 0001	0.0001	0.0504	0 571	2.705	4.4278
Total Accid. Mish. Risk	10.11	0	0.25	0.106	0.106	0.0251	0.0022	0.1052	5.276	22.655	38.6355
Total Maint. Mish. Risk	2.4761	0	0.1201	0.0014	0.0014	0.0013	0.0004	0.2156	2.6901	11.755	17.2614
Total Both Mish. Risks	12.5861	0	0.3701	0.1074	0.1074	0.0264	0.0026	0.3208	7.9661	34.41	55.8969

(1) Pretreatment phase combines risks of Sludge Washing, Solids/Liquid Separation, and Cesium Ion Exchange

ALTERNATIVE 2
SUMMARY RISK DATA

	Large Pilot Plant For Hot Functional Testing	Small Scale Integrated Pilot Plant	Small Scale Functional Hot Pilot Plant	Bench Scale Hot Test	Lab Scale Hot Tests	Bench Scale Simulants and Tracers	Lab Scale Simulants and Tracers	Pilot Scale Simulant Tests	Large Scale and Full Scale Equip Tests	Full Scale Hot Demonstration or Process Test	Totals
Accident Mishap Risk											
Retrieval	0	0	0	0	0	0	0	0	0.25	2.5	2.75
Pretreatment(1)	0	0.0305	0	0.006	0.006	0.0051	0.0002	0.0052	0.026	0.155	0.234
LLW Vitrification	0	0	0	0.05	0.05	0.01	0.001	0.05	2.5	10	12.661
HLW Vitrification	0	2.5	0	0.05	0.05	0.01	0.001	0.05	2.5	10	15.161
Totals	0	2.5305	0	0.106	0.106	0.0251	0.0022	0.1052	5.276	22.655	30.806
Nonrout. Maint. Mishap Risk											
Retrieval	0	0	0	0	0	0	0	0	0.014	0.07	0.084
Pretreatment(1)	0	1.0692	0	0.0012	0.0012	0.0011	0.0002	0.0649	1.0841	5.425	7.6469
LLW Vitrification	0	0	0	0.0001	0.0001	0.0001	0.0001	0.1003	1.021	3.555	4.6767
HLW Vitrification	0	0.6501	0	0.0001	0.0001	0.0001	0.0001	0.0504	0.571	2.705	3.9769
Totals	0	1.7193	0	0.0014	0.0014	0.0013	0.0004	0.2156	2.6901	11.755	16.3845
Retrieval											
Accident Mishap Risk	0	0	0	0	0	0	0	0	0.25	2.5	2.75
Maint. Mishap Risk	0	0	0	0	0	0	0	0	0.014	0.07	0.084
Pretreatment(1)											
Accident Mishap Risk	0	0.0305	0	0.006	0.006	0.0051	0.0002	0.0052	0.026	0.155	0.234
Maint. Mishap Risk	0	1.0692	0	0.0012	0.0012	0.0011	0.0002	0.0649	1.0841	5.425	7.6469
LLW Vitrification											
Accident Mishap Risk	0	0	0	0.05	0.05	0.01	0.001	0.05	2.5	10	12.661
Maint. Mishap Risk	0	0	0	0.0001	0.0001	0.0001	0.0001	0.1003	1.021	3.555	4.6767
HLW Vitrification											
Accident Mishap Risk	0	2.5	0	0.05	0.05	0.01	0.001	0.05	2.5	10	15.161
Maint. Mishap Risk	0	0.6501	0	0.0001	0.0001	0.0001	0.0001	0.0504	0.571	2.705	3.9769
Total Accid. Mish. Risk	0	2.5305	0	0.106	0.106	0.0251	0.0022	0.1052	5.276	22.655	30.806
Total Maint. Mish. Risk	0	1.7193	0	0.0014	0.0014	0.0013	0.0004	0.2156	2.6901	11.755	16.3845
Total Both Mish. Risks	0	4.2498	0	0.1074	0.1074	0.0264	0.0026	0.3208	7.9661	34.41	47.1905

(1) Pretreatment phase combines risks of Sludge Washing, Solids/Liquid Separation, and Cesium Ion Exchange

ALTERNATIVE 3
SUMMARY RISK DATA

	Large Pilot Plant For Hot Functional Testing	Small Scale Integrated Pilot Plant	Small Scale Functional Hot Pilot Plant	Bench Scale Hot Test	Lab Scale Hot Tests	Bench Scale Simulants and Tracers	Lab Scale Simulants and Tracers	Pilot Scale Simulant Tests	Large Scale and Full Scale Equip Tests	Full Scale Hot Demonstration or Process Test	Totals
Accident Mishap Risk											
Retrieval	0	0	0	0	0	0	0	0	0.25	2.5	2.75
Pretreatment(1)	0	0	0.026	0.006	0.006	0.0051	0.0002	0.0052	0.026	0.155	0.2295
LLW Vitrification	0	0	0	0.05	0.05	0.01	0.001	0.05	2.5	10	12.661
HLW Vitrification	0	0	0.25	0.05	0.05	0.01	0.001	0.05	2.5	10	12.911
Totals	0	0	0.276	0.106	0.106	0.0251	0.0022	0.1052	5.276	22.655	28.5515
Nonrout. Maint. Mishap Risk											
Retrieval	0	0	0	0	0	0	0	0	0.014	0.07	0.084
Pretreatment(1)	0	0	0.0842	0.0012	0.0012	0.0011	0.0002	0.0649	1.0841	5.425	6.6619
LLW Vitrification	0	0	0	0.0001	0.0001	0.0001	0.0001	0.1003	1.021	3.555	4.6767
HLW Vitrification	0	0	0.0801	0.0001	0.0001	0.0001	0.0001	0.0504	0.571	2.705	3.4069
Totals	0	0	0.1643	0.0014	0.0014	0.0013	0.0004	0.2156	2.6901	11.755	14.8295
Retrieval											
Accident Mishap Risk	0	0	0	0	0	0	0	0	0.25	2.5	2.75
Maint. Mishap Risk	0	0	0	0	0	0	0	0	0.014	0.07	0.084
Pretreatment(1)											
Accident Mishap Risk	0	0	0.026	0.006	0.006	0.0051	0.0002	0.0052	0.026	0.155	0.2295
Maint. Mishap Risk	0	0	0.0842	0.0012	0.0012	0.0011	0.0002	0.0649	1.0841	5.425	6.6619
LLW Vitrification											
Accident Mishap Risk	0	0	0	0.05	0.05	0.01	0.001	0.05	2.5	10	12.661
Maint. Mishap Risk	0	0	0	0.0001	0.0001	0.0001	0.0001	0.1003	1.021	3.555	4.6767
HLW Vitrification											
Accident Mishap Risk	0	0	0.25	0.05	0.05	0.01	0.001	0.05	2.5	10	12.911
Maint. Mishap Risk	0	0	0.0801	0.0001	0.0001	0.0001	0.0001	0.0504	0.571	2.705	3.4069
Total Accid. Mish. Risk	0	0	0.276	0.106	0.106	0.0251	0.0022	0.1052	5.276	22.655	28.5515
Total Maint. Mish. Risk	0	0	0.1643	0.0014	0.0014	0.0013	0.0004	0.2156	2.6901	11.755	14.8295
Total Both Mish. Risks	0	0	0.4403	0.1074	0.1074	0.0264	0.0026	0.3208	7.9661	34.41	43.381

(1) Pretreatment phase combines risks of Sludge Washing, Solids/Liquid Separation, and Cesium Ion Exchange

APPENDIX D-5: ALTERNATIVE TESTING ANNUALIZED PROCESS MISHAP RISK

This page intentionally left blank

ALTERNATIVE 1

ANNUAL SUMMARY RISK DATA

	Start Year	Stop Year	Initial PPG	Annual PPG	FY 95	FY 96	FY 97	FY 98	FY 99	FY 0	FY 1	FY 2	FY 3	FY 4	FY 5	FY 6	FY 7	FY 8	FY 9	FY 10	FY 11	FY 12
Retrieval-Accident																						
Large Pilot Plant	N/A	N/A	0	0.00E+00																		
Small Scale Integrated	N/A	N/A	0	0.00E+00																		
Small Scale Functional	N/A	N/A	0	0.00E+00																		
Bench Scale Hot	N/A	N/A	0	0.00E+00																		
Lab Scale Hot	N/A	N/A	0	0.00E+00																		
Bench Scale Simulant	N/A	N/A	0	0.00E+00																		
Lab Scale Simulant	N/A	N/A	0	0.00E+00																		
Pilot Scale Simulant	N/A	N/A	0	0.00E+00																		
Large Scale Equip Test	2003	2008	0.25	4.17E-02									4.2E-02	4.2E-02	4.2E-02	4.2E-02	4.2E-02	4.2E-02				
Full Scale Hot	1999	2002	2.5	6.25E-01					6.3E-01	6.3E-01	6.3E-01	6.3E-01										
Total			2.75		0.0E+00	0.0E+00	0.0E+00	0.0E+00	6.3E-01	6.3E-01	6.3E-01	6.3E-01	4.2E-02	4.2E-02	4.2E-02	4.2E-02	4.2E-02	4.2E-02	0.0E+00	0.0E+00	0.0E+00	0.0E+00
Retrieval-Nonrout. Maint																						
Large Pilot Plant	N/A	N/A	0	0.00E+00																		
Small Scale Integrated	N/A	N/A	0	0.00E+00																		
Small Scale Functional	N/A	N/A	0	0.00E+00																		
Bench Scale Hot	N/A	N/A	0	0.00E+00																		
Lab Scale Hot	N/A	N/A	0	0.00E+00																		
Bench Scale Simulant	N/A	N/A	0	0.00E+00																		
Lab Scale Simulant	N/A	N/A	0	0.00E+00																		
Pilot Scale Simulant	N/A	N/A	0	0.00E+00																		
Large Scale Equip Test	2003	2008	0.014	2.33E-03									2.3E-03	2.3E-03	2.3E-03	2.3E-03	2.3E-03	2.3E-03				
Full Scale Hot	1999	2002	0.07	1.75E-02					1.8E-02	1.8E-02	1.8E-02	1.8E-02										
Total			0.084		0.0E+00	0.0E+00	0.0E+00	0.0E+00	1.8E-02	1.8E-02	1.8E-02	1.8E-02	2.3E-03	2.3E-03	2.3E-03	2.3E-03	2.3E-03	2.3E-03	0.0E+00	0.0E+00	0.0E+00	0.0E+00
TOTAL ACCID + NONROUT			2.834		0.0E+00	0.0E+00	0.0E+00	0.0E+00	6.4E-01	6.4E-01	6.4E-01	6.4E-01	4.4E-02	4.4E-02	4.4E-02	4.4E-02	4.4E-02	4.4E-02	0.0E+00	0.0E+00	0.0E+00	0.0E+00

NOTE: NO TESTING SCHEDULED PAST 2011

=CHANGES TO BASELINE ALTERNATIVE

ALTERNATIVE 1

ANNUAL SUMMARY RISK DATA

	Start Year	Stop Year	Initial PPG	Annual PPG	FY 95	FY 96	FY 97	FY 98	FY 99	FY 0	FY 1	FY 2	FY 3	FY 4	FY 5	FY 6	FY 7	FY 8	FY 9	FY 10	FY 11	FY 12
Pretreatment-Accident																						
Large Pilot Plant	2002	2004	0.11	3.67E-02								3.7E-02	3.7E-02	3.7E-02								
Small Scale Integrated	N/A	N/A	0	0.00E+00																		
Small Scale Functional	N/A	N/A	0	0.00E+00																		
Bench Scale Hot	1996	1996	0.006	2.00E-03		2.0E-03	2.0E-03	2.0E-03														
Lab Scale Hot	1994	1997	0.006	1.50E-03	1.5E-03	1.5E-03	1.5E-03															
Bench Scale Simulant	1995	1996	0.0051	2.55E-03	2.6E-03	2.6E-03																
Lab Scale Simulant	1994	1997	0.0002	5.00E-05	5.0E-05	5.0E-05	5.0E-05															
Pilot Scale Simulant	1994	1995	0.0052	2.60E-03	2.6E-03																	
Large Scale Equip Test	2003	2006	0.026	4.33E-03									4.3E-03	4.3E-03	4.3E-03	4.3E-03	4.3E-03	4.3E-03				
Full Scale Hot	2006	2009	0.155	7.75E-02														7.8E-02	7.8E-02			
Total			0.3135		6.7E-03	6.1E-03	3.6E-03	2.0E-03	0.0E+00	0.0E+00	0.0E+00	3.7E-02	4.1E-02	4.1E-02	4.3E-03	4.3E-03	4.3E-03	8.2E-02	7.8E-02	0.0E+00	0.0E+00	0.0E+00
Pretreat.-Nonrout. Maint																						
Large Pilot Plant	2002	2004	1.3751	4.58E-01								4.6E-01	4.6E-01	4.6E-01								
Small Scale Integrated	N/A	N/A	0	0.00E+00																		
Small Scale Functional	N/A	N/A	0	0.00E+00																		
Bench Scale Hot	1996	1996	0.0012	4.00E-04		4.0E-04	4.0E-04	4.0E-04														
Lab Scale Hot	1994	1997	0.0012	3.00E-04	3.0E-04	3.0E-04	3.0E-04															
Bench Scale Simulant	1995	1996	0.0011	5.50E-04	5.5E-04	5.5E-04																
Lab Scale Simulant	1994	1997	0.0002	5.00E-05	5.0E-05	5.0E-05	5.0E-05															
Pilot Scale Simulant	1994	1995	0.0649	3.25E-02	3.2E-02																	
Large Scale Equip Test	2003	2006	1.0841	1.81E-01									1.8E-01	1.8E-01	1.8E-01	1.8E-01	1.8E-01	1.8E-01				
Full Scale Hot	2006	2009	5.425	2.71E+00														2.7E+00	2.7E+00			
Total			7.9528		3.3E-02	1.3E-03	7.5E-04	4.0E-04	0.0E+00	0.0E+00	0.0E+00	4.6E-01	6.4E-01	6.4E-01	1.8E-01	1.8E-01	1.8E-01	2.9E+00	2.7E+00	0.0E+00	0.0E+00	0.0E+00
TOTAL ACCID + NONROUT			8.266		4.0E-02	7.4E-03	4.3E-03	2.4E-03	0.0E+00	0.0E+00	0.0E+00	5.0E-01	6.6E-01	6.6E-01	1.9E-01	1.9E-01	1.9E-01	3.0E+00	2.8E+00	0.0E+00	0.0E+00	0.0E+00

NOTE: NO TESTING SCHEDULED PAST 2011

▭ =CHANGES TO BASELINE ALTERNATIVE

ALTERNATIVE 1

ANNUAL SUMMARY RISK DATA

	Start Year	Stop Year	Initial PPG	Annual PPG	FY 95	FY 96	FY 97	FY 98	FY 99	FY 0	FY 1	FY 2	FY 3	FY 4	FY 5	FY 6	FY 7	FY 8	FY 9	FY 10	FY 11	FY 12
LLW-Accident																						
Large Pilot Plant	N/A	N/A	0	0.00E+00																		
Small Scale Integrated	N/A	N/A	0	0.00E+00																		
Small Scale Functional	2005	2010	0.25	4.17E-02											4.2E-02	4.2E-02	4.2E-02	4.2E-02	4.2E-02	4.2E-02		
Bench Scale Hot	1995	2003	0.05	5.56E-03	5.6E-03	5.6E-03	5.6E-03	5.6E-03	5.6E-03	5.6E-03	5.6E-03	5.6E-03	5.6E-03									
Lab Scale Hot	1995	2003	0.05	5.56E-03	5.6E-03	5.6E-03	5.6E-03	5.6E-03	5.6E-03	5.6E-03	5.6E-03	5.6E-03	5.6E-03									
Bench Scale Simulant	1997	1998	0.01	5.00E-03			5.0E-03	5.0E-03														
Lab Scale Simulant	1998	2003	0.001	1.25E-04		1.3E-04	1.3E-04	1.3E-04	1.3E-04	1.3E-04	1.3E-04	1.3E-04	1.3E-04									
Pilot Scale Simulant	1995	2003	0.05	5.56E-03	5.6E-03	5.6E-03	5.6E-03	5.6E-03	5.6E-03	5.6E-03	5.6E-03	5.6E-03	5.6E-03									
Large Scale Equip Test	2003	2008	2.5	4.17E-01									4.2E-01	4.2E-01	4.2E-01	4.2E-01	4.2E-01	4.2E-01				
Full Scale Hot	2005	2008	10	5.00E+00											5.0E+00	5.0E+00						
Total			12.911		1.7E-02	1.7E-02	2.2E-02	2.2E-02	1.7E-02	1.7E-02	1.7E-02	1.7E-02	4.3E-01	4.2E-01	5.5E+00	5.5E+00	4.6E-01	4.6E-01	4.2E-02	4.2E-02	0.0E+00	0.0E+00
LLW Nonrout. Maint																						
Large Pilot Plant	N/A	N/A	0	0.00E+00																		
Small Scale Integrated	N/A	N/A	0	0.00E+00																		
Small Scale Functional	2005	2010	0.1201	2.00E-02											2.0E-02	2.0E-02	2.0E-02	2.0E-02	2.0E-02	2.0E-02		
Bench Scale Hot	1995	2003	0.0001	1.11E-05	1.1E-05	1.1E-05	1.1E-05	1.1E-05	1.1E-05	1.1E-05	1.1E-05	1.1E-05	1.1E-05									
Lab Scale Hot	1995	2003	0.0001	1.11E-05	1.1E-05	1.1E-05	1.1E-05	1.1E-05	1.1E-05	1.1E-05	1.1E-05	1.1E-05	1.1E-05									
Bench Scale Simulant	1997	1998	0.0001	5.00E-05			5.0E-05	5.0E-05														
Lab Scale Simulant	1998	2003	0.0001	1.25E-05		1.3E-05	1.3E-05	1.3E-05	1.3E-05	1.3E-05	1.3E-05	1.3E-05	1.3E-05									
Pilot Scale Simulant	1995	2003	0.1003	1.11E-02	1.1E-02	1.1E-02	1.1E-02	1.1E-02	1.1E-02	1.1E-02	1.1E-02	1.1E-02	1.1E-02	1.1E-02	1.1E-02							
Large Scale Equip Test	2003	2008	1.021	1.70E-01									1.7E-01	1.7E-01	1.7E-01	1.7E-01	1.7E-01	1.7E-01				
Full Scale Hot	2005	2008	3.555	1.78E+00											1.8E+00	1.8E+00						
Total			4.7968		1.1E-02	1.1E-02	1.1E-02	1.1E-02	1.1E-02	1.1E-02	1.1E-02	1.1E-02	1.8E-01	1.8E-01	2.0E+00	2.0E+00	1.9E-01	1.9E-01	2.0E-02	2.0E-02	0.0E+00	0.0E+00
TOTAL ACCID + NONROUT			17.708		2.8E-02	2.8E-02	3.3E-02	3.3E-02	2.8E-02	2.8E-02	2.8E-02	2.8E-02	6.1E-01	6.0E-01	7.4E+00	7.4E+00	6.5E-01	6.5E-01	6.2E-02	6.2E-02	0.0E+00	0.0E+00

NOTE: NO TESTING SCHEDULED PAST 2011

[ ] = CHANGES TO BASELINE ALTERNATIVE

ALTERNATIVE 1

ANNUAL SUMMARY RISK DATA

	Start Year	Stop Year	Initial PPG	Annual PPG	FY 95	FY 96	FY 97	FY 98	FY 99	FY 0	FY 1	FY 2	FY 3	FY 4	FY 5	FY 6	FY 7	FY 8	FY 9	FY 10	FY 11	FY 12
HLW-Accident																						
Large Pilot Plant	2005	2010	10	1.67E+00											1.7E+00	1.7E+00	1.7E+00	1.7E+00	1.7E+00	1.7E+00		
Small Scale Integrated	N/A	N/A	0	0.00E+00																		
Small Scale Functional	N/A	N/A	0	0.00E+00																		
Bench Scale Hot	1995	2003	0.05	5.50E-03	5.6E-03	5.6E-03	5.6E-03	5.6E-03	5.6E-03	5.6E-03	5.6E-03	5.6E-03	5.6E-03									
Lab Scale Hot	1994	1995	0.05	2.50E-02	2.5E-02																	
Bench Scale Simulant	1997	1998	0.01	5.00E-03			5.0E-03	5.0E-03														
Lab Scale Simulant	1994	1995	0.001	5.00E-04	5.0E-04																	
Pilot Scale Simulant	1994	1995	0.05	2.50E-02	2.5E-02																	
Large Scale Equip Test	2003	2006	2.5	4.17E-01									4.2E-01	4.2E-01	4.2E-01	4.2E-01	4.2E-01	4.2E-01				
Full Scale Hot	1999	2002	10	2.50E+00					2.5E+00	2.5E+00	2.5E+00	2.5E+00										
Total			22.681		5.6E-02	5.6E-03	1.1E-02	1.1E-02	2.5E+00	2.5E+00	2.5E+00	2.5E+00	4.2E-01	4.2E-01	2.1E+00	2.1E+00	2.1E+00	2.1E+00	1.7E+00	1.7E+00	0.0E+00	0.0E+00
HLW-Nonrout. Maint																						
Large Pilot Plant	2005	2010	1.101	1.84E-01											1.8E-01	1.8E-01	1.8E-01	1.8E-01	1.8E-01	1.8E-01		
Small Scale Integrated	N/A	N/A	0	0.00E+00																		
Small Scale Functional	N/A	N/A	0	0.00E+00																		
Bench Scale Hot	1995	2003	0.0001	1.11E-05	1.1E-05	1.1E-05	1.1E-05	1.1E-05	1.1E-05	1.1E-05	1.1E-05	1.1E-05	1.1E-05									
Lab Scale Hot	1994	1995	0.0001	5.00E-05	5.0E-05																	
Bench Scale Simulant	1997	1998	0.0001	5.00E-05			5.0E-05	5.0E-05														
Lab Scale Simulant	1994	1995	0.0001	5.00E-05	5.0E-05																	
Pilot Scale Simulant	1994	1995	0.0504	2.52E-02	2.5E-02																	
Large Scale Equip Test	2003	2006	0.671	9.52E-02									9.5E-02	9.5E-02	9.5E-02	9.5E-02	9.5E-02	9.5E-02				
Full Scale Hot	1999	2002	2.705	6.76E-01					6.8E-01	6.8E-01	6.8E-01	6.8E-01										
Total			4.4278		2.5E-02	1.1E-05	6.1E-05	6.1E-05	6.8E-01	6.8E-01	6.8E-01	6.8E-01	9.5E-02	9.5E-02	2.8E-01	2.8E-01	2.8E-01	2.8E-01	1.8E-01	1.8E-01	0.0E+00	0.0E+00
TOTAL ACCID + NONROUT			27.089		8.1E-02	5.6E-03	1.1E-02	1.1E-02	3.2E+00	3.2E+00	3.2E+00	3.2E+00	5.2E-01	5.1E-01	2.4E+00	2.4E+00	2.4E+00	2.4E+00	1.9E+00	1.9E+00	0.0E+00	0.0E+00

NOTE: NO TESTING SCHEDULED PAST 2011

=CHANGES TO BASELINE ALTERNATIVE

ALTERNATIVE 2

ANNUAL SUMMARY RISK DATA

	Start Year	Stop Year	Initial PPG	Annual PPG	FY 95	FY 96	FY 97	FY 98	FY 99	FY 0	FY 1	FY 2	FY 3	FY 4	FY 5	FY 6	FY 7	FY 8	FY 9	FY 10	FY 11	FY 12
Retrieval-Accident																						
Large Pilot Plant	N/A	N/A	0	0.00E+00																		
Small Scale Integrated	N/A	N/A	0	0.00E+00																		
Small Scale Functional	N/A	N/A	0	0.00E+00																		
Bench Scale Hot	N/A	N/A	0	0.00E+00																		
Lab Scale Hot	N/A	N/A	0	0.00E+00																		
Bench Scale Simulant	N/A	N/A	0	0.00E+00																		
Lab Scale Simulant	N/A	N/A	0	0.00E+00																		
Pilot Scale Simulant	N/A	N/A	0	0.00E+00																		
Large Scale Equip Test	2003	2006	0.25	4.17E-02									4.2E-02	4.2E-02	4.2E-02	4.2E-02	4.2E-02	4.2E-02				
Full Scale Hot	1999	2002	2.5	6.25E-01					6.3E-01	6.3E-01	6.3E-01	6.3E-01										
Total			2.75		0.0E+00	0.0E+00	0.0E+00	0.0E+00	6.3E-01	6.3E-01	6.3E-01	6.3E-01	4.2E-02	4.2E-02	4.2E-02	4.2E-02	4.2E-02	4.2E-02	0.0E+00	0.0E+00	0.0E+00	0.0E+00
Retrieval-Nonrout. Maint																						
Large Pilot Plant	N/A	N/A	0	0.00E+00																		
Small Scale Integrated	N/A	N/A	0	0.00E+00																		
Small Scale Functional	N/A	N/A	0	0.00E+00																		
Bench Scale Hot	N/A	N/A	0	0.00E+00																		
Lab Scale Hot	N/A	N/A	0	0.00E+00																		
Bench Scale Simulant	N/A	N/A	0	0.00E+00																		
Lab Scale Simulant	N/A	N/A	0	0.00E+00																		
Pilot Scale Simulant	N/A	N/A	0	0.00E+00																		
Large Scale Equip Test	2003	2006	0.014	2.33E-03									2.3E-03	2.3E-03	2.3E-03	2.3E-03	2.3E-03	2.3E-03				
Full Scale Hot	1999	2002	0.07	1.75E-02					1.8E-02	1.8E-02	1.8E-02	1.8E-02										
Total			0.084		0.0E+00	0.0E+00	0.0E+00	0.0E+00	1.8E-02	1.8E-02	1.8E-02	1.8E-02	2.3E-03	2.3E-03	2.3E-03	2.3E-03	2.3E-03	2.3E-03	0.0E+00	0.0E+00	0.0E+00	0.0E+00
TOTAL ACCID + NONROUT			2.834		0.0E+00	0.0E+00	0.0E+00	0.0E+00	6.4E-01	6.4E-01	6.4E-01	6.4E-01	4.4E-02	4.4E-02	4.4E-02	4.4E-02	4.4E-02	4.4E-02	0.0E+00	0.0E+00	0.0E+00	0.0E+00

NOTE: NO TESTING SCHEDULED PAST 2011

*CHANGES TO BASELINE ALTERNATIVE

ALTERNATIVE 2

ANNUAL SUMMARY RISK DATA

	Start Year	Stop Year	Initial PPG	Annual PPG	FY 95	FY 96	FY 97	FY 98	FY 99	FY 0	FY 1	FY 2	FY 3	FY 4	FY 5	FY 6	FY 7	FY 8	FY 9	FY 10	FY 11	FY 12
Pretreatment-Accident																						
Large Pilot Plant	N/A	N/A	0	0.00E+00												2.9E-04	2.9E-04	2.9E-04	2.9E-04	2.9E-04	2.9E-04	
Small Scale Integrated	2006	2111	0.0305	2.88E-04																		
Small Scale Functional	N/A	N/A	0	0.00E+00																		
Bench Scale Hot	1996	1996	0.006	2.00E-03		2.0E-03	2.0E-03	2.0E-03														
Lab Scale Hot	1994	1997	0.006	1.50E-03	1.5E-03	1.5E-03	1.5E-03															
Bench Scale Simulant	1995	1996	0.0051	2.55E-03	2.6E-03	2.6E-03																
Lab Scale Simulant	1994	1997	0.0002	5.00E-05	5.0E-05	5.0E-05	5.0E-05															
Pilot Scale Simulant	1994	1995	0.0052	2.60E-03	2.6E-03								4.3E-03	4.3E-03	4.3E-03	4.3E-03	4.3E-03	4.3E-03				
Large Scale Equip Test	2003	2006	0.026	4.33E-03														7.8E-02	7.8E-02			
Full Scale Hot	2006	2009	0.155	7.75E-02																		
Total			0.234		6.7E-03	6.1E-03	3.6E-03	2.0E-03	0.0E+00	0.0E+00	0.0E+00	0.0E+00	4.3E-03	4.3E-03	4.3E-03	4.6E-03	4.6E-03	8.2E-02	7.8E-02	2.9E-04	2.9E-04	0.0E+00
Pretreat.-Nonrout. Maint																						
Large Pilot Plant	N/A	N/A	0	0.00E+00												1.0E-02	1.0E-02	1.0E-02	1.0E-02	1.0E-02	1.0E-02	
Small Scale Integrated	2006	2111	1.0092	1.01E-02																		
Small Scale Functional	N/A	N/A	0	0.00E+00																		
Bench Scale Hot	1996	1996	0.0012	4.00E-04		4.0E-04	4.0E-04	4.0E-04														
Lab Scale Hot	1994	1997	0.0012	3.00E-04	3.0E-04	3.0E-04	3.0E-04															
Bench Scale Simulant	1995	1996	0.0011	5.50E-04	5.5E-04	5.5E-04																
Lab Scale Simulant	1994	1997	0.0002	5.00E-05	5.0E-05	5.0E-05	5.0E-05															
Pilot Scale Simulant	1994	1995	0.0649	3.25E-02	3.2E-02								1.8E-01	1.8E-01	1.8E-01	1.8E-01	1.8E-01	1.8E-01				
Large Scale Equip Test	2003	2006	1.0641	1.81E-01														2.7E+00	2.7E+00			
Full Scale Hot	2006	2009	5.425	2.71E+00																		
Total			7.6469		3.3E-02	1.3E-03	7.5E-04	4.0E-04	0.0E+00	0.0E+00	0.0E+00	0.0E+00	1.8E-01	1.8E-01	1.8E-01	1.9E-01	1.9E-01	2.9E+00	2.7E+00	1.0E-02	1.0E-02	0.0E+00
TOTAL ACCID + NONROUT			7.881		4.0E-02	7.4E-03	4.3E-03	2.4E-03	0.0E+00	0.0E+00	0.0E+00	0.0E+00	1.9E-01	1.9E-01	1.9E-01	2.0E-01	2.0E-01	3.0E+00	2.8E+00	1.0E-02	1.0E-02	0.0E+00

NOTE: NO TESTING SCHEDULED PAST 2011

[ ] =CHANGES TO BASELINE ALTERNATIVE

ALTERNATIVE 2

ANNUAL SUMMARY RISK DATA

	Start Year	Stop Year	Initial PPQ	Annual PPQ	FY 95	FY 96	FY 97	FY 98	FY 99	FY 0	FY 1	FY 2	FY 3	FY 4	FY 5	FY 6	FY 7	FY 8	FY 9	FY 10	FY 11	FY 12
LLW-Accident																						
Large Pilot Plant	N/A	N/A	0	0.00E+00																		
Small Scale Integrated	N/A	N/A	0	0.00E+00																		
Small Scale Functional	N/A	N/A	0	0.00E+00																		
Bench Scale Hot	1995	2003	0.05	5.56E-03	5.6E-03	5.6E-03	5.6E-03	5.6E-03	5.6E-03	5.6E-03	5.6E-03	5.6E-03	5.6E-03									
Lab Scale Hot	1995	2003	0.05	5.56E-03	5.6E-03	5.6E-03	5.6E-03	5.6E-03	5.6E-03	5.6E-03	5.6E-03	5.6E-03	5.6E-03									
Bench Scale Simulant	1997	1998	0.01	5.00E-03			5.0E-03	5.0E-03														
Lab Scale Simulant	1998	2003	0.001	1.25E-04		1.3E-04	1.3E-04	1.3E-04	1.3E-04	1.3E-04	1.3E-04	1.3E-04	1.3E-04									
Pilot Scale Simulant	1995	2003	0.05	5.56E-03	5.6E-03	5.6E-03	5.6E-03	5.6E-03	5.6E-03	5.6E-03	5.6E-03	5.6E-03	5.6E-03									
Large Scale Equip Test	2003	2006	2.5	4.17E-01									4.2E-01	4.2E-01	4.2E-01	4.2E-01	4.2E-01	4.2E-01				
Full Scale Hot	2005	2006	10	5.00E+00											5.0E+00	5.0E+00						
Total			12.661		1.7E-02	1.7E-02	2.2E-02	2.2E-02	1.7E-02	1.7E-02	1.7E-02	1.7E-02	4.3E-01	4.2E-01	5.4E+00	5.4E+00	4.2E-01	4.2E-01	0.0E+00	0.0E+00	0.0E+00	0.0E+00
LLW Nonrout. Maint																						
Large Pilot Plant	N/A	N/A	0	0.00E+00																		
Small Scale Integrated	N/A	N/A	0	0.00E+00																		
Small Scale Functional	N/A	N/A	0	0.00E+00																		
Bench Scale Hot	1995	2003	0.0001	1.11E-05	1.1E-05	1.1E-05	1.1E-05	1.1E-05	1.1E-05	1.1E-05	1.1E-05	1.1E-05	1.1E-05									
Lab Scale Hot	1995	2003	0.0001	1.11E-05	1.1E-05	1.1E-05	1.1E-05	1.1E-05	1.1E-05	1.1E-05	1.1E-05	1.1E-05	1.1E-05									
Bench Scale Simulant	1997	1998	0.0001	5.00E-05			5.0E-05	5.0E-05														
Lab Scale Simulant	1998	2003	0.0001	1.25E-05		1.3E-05	1.3E-05	1.3E-05	1.3E-05	1.3E-05	1.3E-05	1.3E-05	1.3E-05									
Pilot Scale Simulant	1995	2003	0.1003	1.11E-02	1.1E-02	1.1E-02	1.1E-02	1.1E-02	1.1E-02	1.1E-02	1.1E-02	1.1E-02	1.1E-02	1.1E-02	1.1E-02							
Large Scale Equip Test	2003	2006	1.021	1.70E-01									1.7E-01	1.7E-01	1.7E-01	1.7E-01	1.7E-01	1.7E-01				
Full Scale Hot	2005	2006	3.655	1.78E+00											1.8E+00	1.8E+00						
Total			4.6767		1.1E-02	1.1E-02	1.1E-02	1.1E-02	1.1E-02	1.1E-02	1.1E-02	1.1E-02	1.8E-01	1.8E-01	2.0E+00	1.9E+00	1.7E-01	1.7E-01	0.0E+00	0.0E+00	0.0E+00	0.0E+00
TOTAL ACCID + NONROUT			17.338		2.8E-02	2.8E-02	3.3E-02	3.3E-02	2.8E-02	2.8E-02	2.8E-02	2.8E-02	6.1E-01	6.0E-01	7.4E+00	7.4E+00	5.9E-01	5.9E-01	0.0E+00	0.0E+00	0.0E+00	0.0E+00

NOTE: NO TESTING SCHEDULED PAST 2011

[ ] =CHANGES TO BASELINE ALTERNATIVE

ALTERNATIVE 2

ANNUAL SUMMARY RISK DATA

	Start Year	Stop Year	Initial PPG	Annual PPG	FY 95	FY 96	FY 97	FY 98	FY 99	FY 0	FY 1	FY 2	FY 3	FY 4	FY 5	FY 6	FY 7	FY 8	FY 9	FY 10	FY 11	FY 12
HLW-Accident																						
Large Pilot Plant	N/A	N/A	0	0.00E+00												2.4E-02	2.4E-02	2.4E-02	2.4E-02	2.4E-02	2.4E-02	
Small Scale Integrated	2006	2111	2.5	2.36E-02																		
Small Scale Functional	N/A	N/A	0	0.00E+00																		
Bench Scale Hot	1995	2003	0.05	5.56E-03	5.6E-03	5.6E-03	5.6E-03	5.6E-03	5.6E-03	5.6E-03	5.6E-03	5.6E-03	5.6E-03									
Lab Scale Hot	1994	1995	0.05	2.50E-02	2.5E-02																	
Bench Scale Simulant	1997	1998	0.01	5.00E-03			5.0E-03	5.0E-03														
Lab Scale Simulant	1994	1995	0.001	5.00E-04	5.0E-04																	
Pilot Scale Simulant	1994	1995	0.05	2.50E-02	2.5E-02																	
Large Scale Equip Test	2003	2006	2.5	4.17E-01									4.2E-01	4.2E-01	4.2E-01	4.2E-01	4.2E-01	4.2E-01				
Full Scale Hot	1999	2002	10	2.50E+00					2.5E+00	2.5E+00	2.5E+00	2.5E+00										
Total			15.161		5.6E-02	5.6E-03	1.1E-02	1.1E-02	2.5E+00	2.5E+00	2.5E+00	2.5E+00	4.2E-01	4.2E-01	4.2E-01	4.4E-01	4.4E-01	4.4E-01	2.4E-02	2.4E-02	2.4E-02	0.0E+00
HLW-Nonrout. Maint																						
Large Pilot Plant	N/A	N/A	0	0.00E+00												6.1E-03	6.1E-03	6.1E-03	6.1E-03	6.1E-03	6.1E-03	
Small Scale Integrated	2006	2111	0.6501	6.13E-03																		
Small Scale Functional	N/A	N/A	0	0.00E+00																		
Bench Scale Hot	1995	2003	0.0001	1.11E-05	1.1E-05	1.1E-05	1.1E-05	1.1E-05	1.1E-05	1.1E-05	1.1E-05	1.1E-05	1.1E-05									
Lab Scale Hot	1994	1995	0.0001	5.00E-05	5.0E-05																	
Bench Scale Simulant	1997	1998	0.0001	5.00E-05			5.0E-05	5.0E-05														
Lab Scale Simulant	1994	1995	0.0001	5.00E-05	5.0E-05																	
Pilot Scale Simulant	1994	1995	0.0504	2.52E-02	2.5E-02																	
Large Scale Equip Test	2003	2006	0.571	9.52E-02									9.5E-02	9.5E-02	9.5E-02	9.5E-02	9.5E-02	9.5E-02				
Full Scale Hot	1999	2002	2.705	6.76E-01					6.8E-01	6.8E-01	6.8E-01	6.8E-01										
Total			3.0769		2.5E-02	1.1E-05	6.1E-05	6.1E-05	6.8E-01	6.8E-01	6.8E-01	6.8E-01	9.5E-02	9.5E-02	9.5E-02	1.0E-01	1.0E-01	1.0E-01	6.1E-03	6.1E-03	6.1E-03	0.0E+00
TOTAL ACCID + NONROUT			19.138		8.1E-02	5.6E-03	1.1E-02	1.1E-02	3.2E+00	3.2E+00	3.2E+00	3.2E+00	5.2E-01	5.1E-01	5.1E-01	5.4E-01	5.4E-01	5.4E-01	3.0E-02	3.0E-02	3.0E-02	0.0E+00

NOTE: NO TESTING SCHEDULED PAST 2011

[ ] *CHANGES TO BASELINE ALTERNATIVE

ALTERNATIVE 3

ANNUAL SUMMARY RISK DATA

	Start Year	Stop Year	Initial PPG	Annual PPG	FY 95	FY 96	FY 97	FY 98	FY 99	FY 0	FY 1	FY 2	FY 3	FY 4	FY 5	FY 6	FY 7	FY 8	FY 9	FY 10	FY 11	FY 12
Retrieval-Accident																						
Large Pilot Plant	N/A	N/A	0	0.00E+00																		
Small Scale Integrated	N/A	N/A	0	0.00E+00																		
Small Scale Functional	N/A	N/A	0	0.00E+00																		
Bench Scale Hot	N/A	N/A	0	0.00E+00																		
Lab Scale Hot	N/A	N/A	0	0.00E+00																		
Bench Scale Simulant	N/A	N/A	0	0.00E+00																		
Lab Scale Simulant	N/A	N/A	0	0.00E+00																		
Pilot Scale Simulant	N/A	N/A	0	0.00E+00																		
Large Scale Equip Test	2003	2008	0.25	4.17E-02									4.2E-02	4.2E-02	4.2E-02	4.2E-02	4.2E-02	4.2E-02				
Full Scale Hot	1999	2002	2.5	6.25E-01					6.3E-01	6.3E-01	6.3E-01	6.3E-01										
Total			2.75		0.0E+00	0.0E+00	0.0E+00	0.0E+00	6.3E-01	6.3E-01	6.3E-01	6.3E-01	4.2E-02	4.2E-02	4.2E-02	4.2E-02	4.2E-02	4.2E-02	0.0E+00	0.0E+00	0.0E+00	0.0E+00
Retrieval-Nonrout. Maint																						
Large Pilot Plant	N/A	N/A	0	0.00E+00																		
Small Scale Integrated	N/A	N/A	0	0.00E+00																		
Small Scale Functional	N/A	N/A	0	0.00E+00																		
Bench Scale Hot	N/A	N/A	0	0.00E+00																		
Lab Scale Hot	N/A	N/A	0	0.00E+00																		
Bench Scale Simulant	N/A	N/A	0	0.00E+00																		
Lab Scale Simulant	N/A	N/A	0	0.00E+00																		
Pilot Scale Simulant	N/A	N/A	0	0.00E+00																		
Large Scale Equip Test	2003	2008	0.014	2.33E-03									2.3E-03	2.3E-03	2.3E-03	2.3E-03	2.3E-03	2.3E-03				
Full Scale Hot	1999	2002	0.07	1.75E-02					1.8E-02	1.8E-02	1.8E-02	1.8E-02										
Total			0.084		0.0E+00	0.0E+00	0.0E+00	0.0E+00	1.8E-02	1.8E-02	1.8E-02	1.8E-02	2.3E-03	2.3E-03	2.3E-03	2.3E-03	2.3E-03	2.3E-03	0.0E+00	0.0E+00	0.0E+00	0.0E+00
TOTAL ACCID + NONROUT			2.834		0.0E+00	0.0E+00	0.0E+00	0.0E+00	6.4E-01	6.4E-01	6.4E-01	6.4E-01	4.4E-02	4.4E-02	4.4E-02	4.4E-02	4.4E-02	4.4E-02	0.0E+00	0.0E+00	0.0E+00	0.0E+00

NOTE: NO TESTING SCHEDULED PAST 2011

[ ] = CHANGES TO BASELINE ALTERNATIVE

ALTERNATIVE 3

ANNUAL SUMMARY RISK DATA

	Start Year	Stop Year	Initial PPG	Annual PPG	FY 95	FY 96	FY 97	FY 98	FY 99	FY 0	FY 1	FY 2	FY 3	FY 4	FY 5	FY 6	FY 7	FY 8	FY 9	FY 10	FY 11	FY 12
Pretreatment-Accident																						
Large Pilot Plant	N/A	N/A	0	0.00E+00																		
Small Scale Integrated	N/A	N/A	0	0.00E+00																		
Small Scale Functional	1999	2001	0.026	8.67E-03					8.7E-03	8.7E-03	8.7E-03											
Bench Scale Hot	1996	1996	0.006	2.00E-03		2.0E-03	2.0E-03	2.0E-03														
Lab Scale Hot	1994	1997	0.006	1.50E-03	1.5E-03	1.5E-03	1.5E-03															
Bench Scale Simulant	1995	1996	0.0051	2.55E-03	2.6E-03	2.6E-03																
Lab Scale Simulant	1994	1997	0.0002	5.00E-05	5.0E-05	5.0E-05	5.0E-05															
Pilot Scale Simulant	1994	1995	0.0052	2.60E-03	2.6E-03								4.3E-03	4.3E-03	4.3E-03	4.3E-03	4.3E-03	4.3E-03				
Large Scale Equip Test	2003	2008	0.026	4.33E-03														7.8E-02	7.8E-02			
Full Scale Hot	2008	2009	0.155	7.75E-02																		
Total			0.2295		6.7E-03	6.1E-03	3.6E-03	2.0E-03	8.7E-03	8.7E-03	8.7E-03	0.0E+00	4.3E-03	4.3E-03	4.3E-03	4.3E-03	4.3E-03	8.2E-02	7.8E-02	0.0E+00	0.0E+00	0.0E+00
Pretreat.-Nonrout. Maint																						
Large Pilot Plant	N/A	N/A	0	0.00E+00																		
Small Scale Integrated	N/A	N/A	0	0.00E+00																		
Small Scale Functional	1999	2001	0.0642	2.61E-02					2.6E-02	2.6E-02	2.6E-02											
Bench Scale Hot	1996	1996	0.0012	4.00E-04		4.0E-04	4.0E-04	4.0E-04														
Lab Scale Hot	1994	1997	0.0012	3.00E-04	3.0E-04	3.0E-04	3.0E-04															
Bench Scale Simulant	1995	1996	0.0011	5.50E-04	5.5E-04	5.5E-04																
Lab Scale Simulant	1994	1997	0.0002	5.00E-05	5.0E-05	5.0E-05	5.0E-05															
Pilot Scale Simulant	1994	1995	0.0649	3.25E-02	3.2E-02								1.8E-01	1.8E-01	1.8E-01	1.8E-01	1.8E-01	1.6E-01				
Large Scale Equip Test	2003	2008	1.0641	1.81E-01														2.7E+00	2.7E+00			
Full Scale Hot	2008	2009	5.425	2.71E+00																		
Total			6.6619		3.3E-02	1.3E-03	7.5E-04	4.0E-04	2.6E-02	2.6E-02	2.6E-02	0.0E+00	1.8E-01	1.8E-01	1.8E-01	1.8E-01	1.8E-01	2.9E+00	2.7E+00	0.0E+00	0.0E+00	0.0E+00
TOTAL ACCID + NONROUT			6.891		4.0E-02	7.4E-03	4.3E-03	2.4E-03	3.7E-02	3.7E-02	3.7E-02	0.0E+00	1.9E-01	1.9E-01	1.9E-01	1.9E-01	1.9E-01	3.0E+00	2.8E+00	0.0E+00	0.0E+00	0.0E+00

NOTE: NO TESTING SCHEDULED PAST 2011

[ ] = CHANGES TO BASELINE ALTERNATIVE

ALTERNATIVE 3

ANNUAL SUMMARY RISK DATA

	Start Year	Stop Year	Initial PPG	Annual PPG	FY 95	FY 96	FY 97	FY 98	FY 99	FY 0	FY 1	FY 2	FY 3	FY 4	FY 5	FY 6	FY 7	FY 8	FY 9	FY 10	FY 11	FY 12
LLW-Accident																						
Large Pilot Plant	N/A	N/A	0	0.00E+00																		
Small Scale Integrated	N/A	N/A	0	0.00E+00																		
Small Scale Functional	N/A	N/A	0	0.00E+00																		
Bench Scale Hot	1995	2003	0.05	5.56E-03	5.6E-03	5.6E-03	5.6E-03	5.6E-03	5.6E-03	5.6E-03	5.6E-03	5.6E-03	5.6E-03									
Lab Scale Hot	1995	2003	0.05	5.56E-03	5.6E-03	5.6E-03	5.6E-03	5.6E-03	5.6E-03	5.6E-03	5.6E-03	5.6E-03	5.6E-03									
Bench Scale Simulant	1997	1998	0.01	5.00E-03			5.0E-03	5.0E-03														
Lab Scale Simulant	1998	2003	0.001	1.25E-04		1.3E-04	1.3E-04	1.3E-04	1.3E-04	1.3E-04	1.3E-04	1.3E-04	1.3E-04									
Pilot Scale Simulant	1995	2003	0.05	5.56E-03	5.6E-03	5.6E-03	5.6E-03	5.6E-03	5.6E-03	5.6E-03	5.6E-03	5.6E-03	5.6E-03									
Large Scale Equip Test	2003	2008	2.5	4.17E-01									4.2E-01	4.2E-01	4.2E-01	4.2E-01	4.2E-01	4.2E-01				
Full Scale Hot	2005	2006	10	5.00E+00											5.0E+00	5.0E+00						
Total			12.661		1.7E-02	1.7E-02	2.2E-02	2.2E-02	1.7E-02	1.7E-02	1.7E-02	1.7E-02	4.3E-01	4.2E-01	5.4E+00	5.4E+00	4.2E-01	4.2E-01	0.0E+00	0.0E+00	0.0E+00	0.0E+00
LLW Nonrout. Maint																						
Large Pilot Plant	N/A	N/A	0	0.00E+00																		
Small Scale Integrated	N/A	N/A	0	0.00E+00																		
Small Scale Functional	N/A	N/A	0	0.00E+00																		
Bench Scale Hot	1995	2003	0.0001	1.11E-05	1.1E-05	1.1E-05	1.1E-05	1.1E-05	1.1E-05	1.1E-05	1.1E-05	1.1E-05	1.1E-05									
Lab Scale Hot	1995	2003	0.0001	1.11E-05	1.1E-05	1.1E-05	1.1E-05	1.1E-05	1.1E-05	1.1E-05	1.1E-05	1.1E-05	1.1E-05									
Bench Scale Simulant	1997	1998	0.0001	5.00E-05			5.0E-05	5.0E-05														
Lab Scale Simulant	1998	2003	0.0001	1.25E-05		1.3E-05	1.3E-05	1.3E-05	1.3E-05	1.3E-05	1.3E-05	1.3E-05	1.3E-05									
Pilot Scale Simulant	1995	2003	0.1003	1.11E-02	1.1E-02	1.1E-02	1.1E-02	1.1E-02	1.1E-02	1.1E-02	1.1E-02	1.1E-02	1.1E-02	1.1E-02	1.1E-02							
Large Scale Equip Test	2003	2008	1.021	1.70E-01									1.7E-01	1.7E-01	1.7E-01	1.7E-01	1.7E-01	1.7E-01				
Full Scale Hot	2005	2006	3.555	1.78E+00											1.8E+00	1.8E+00						
Total			4.6767		1.1E-02	1.1E-02	1.1E-02	1.1E-02	1.1E-02	1.1E-02	1.1E-02	1.1E-02	1.8E-01	1.8E-01	2.0E+00	1.9E+00	1.7E-01	1.7E-01	0.0E+00	0.0E+00	0.0E+00	0.0E+00
TOTAL ACCID + NONROUT			17.338		2.8E-02	2.8E-02	3.3E-02	3.3E-02	2.8E-02	2.8E-02	2.8E-02	2.8E-02	6.1E-01	6.0E-01	7.4E+00	7.4E+00	5.9E-01	5.9E-01	0.0E+00	0.0E+00	0.0E+00	0.0E+00

NOTE: NO TESTING SCHEDULED PAST 2011

[ ] =CHANGES TO BASELINE ALTERNATIVE

ALTERNATIVE 3

ANNUAL SUMMARY RISK DATA

	Start Year	Stop Year	Initial PPG	Annual PPG	FY 95	FY 96	FY 97	FY 98	FY 99	FY 0	FY 1	FY 2	FY 3	FY 4	FY 5	FY 6	FY 7	FY 8	FY 9	FY 10	FY 11	FY 12
HLW-Accident																						
Large Pilot Plant	N/A	N/A	0	0.00E+00																		
Small Scale Integrated	N/A	N/A	0	0.00E+00																		
Small Scale Functional	2003	2008	0.25	4.17E-02									4.2E-02	4.2E-02	4.2E-02	4.2E-02	4.2E-02	4.2E-02				
Bench Scale Hot	1995	2003	0.05	5.56E-03	5.6E-03	5.6E-03	5.6E-03	5.6E-03	5.6E-03	5.6E-03	5.6E-03	5.6E-03	5.6E-03									
Lab Scale Hot	1994	1995	0.05	2.50E-02	2.5E-02																	
Bench Scale Simulant	1997	1998	0.01	5.00E-03			5.0E-03	5.0E-03														
Lab Scale Simulant	1994	1995	0.001	5.00E-04	5.0E-04																	
Pilot Scale Simulant	1994	1995	0.05	2.50E-02	2.5E-02																	
Large Scale Equip Test	2003	2008	2.5	4.17E-01									4.2E-01	4.2E-01	4.2E-01	4.2E-01	4.2E-01	4.2E-01				
Full Scale Hot	1999	2002	10	2.50E+00					2.5E+00	2.5E+00	2.5E+00	2.5E+00										
Total			12.911		5.6E-02	5.6E-03	1.1E-02	1.1E-02	2.5E+00	2.5E+00	2.5E+00	2.5E+00	4.6E-01	4.6E-01	4.6E-01	4.6E-01	4.6E-01	4.6E-01	0.0E+00	0.0E+00	0.0E+00	0.0E+00
HLW-Nonrout. Maint																						
Large Pilot Plant	N/A	N/A	0	0.00E+00																		
Small Scale Integrated	N/A	N/A	0	0.00E+00																		
Small Scale Functional	2003	2008	0.0001	1.34E-02									1.3E-02	1.3E-02	1.3E-02	1.3E-02	1.3E-02	1.3E-02				
Bench Scale Hot	1995	2003	0.0001	1.11E-05	1.1E-05	1.1E-05	1.1E-05	1.1E-05	1.1E-05	1.1E-05	1.1E-05	1.1E-05	1.1E-05									
Lab Scale Hot	1994	1995	0.0001	5.00E-05	5.0E-05																	
Bench Scale Simulant	1997	1998	0.0001	5.00E-05			5.0E-05	5.0E-05														
Lab Scale Simulant	1994	1995	0.0001	5.00E-05	5.0E-05																	
Pilot Scale Simulant	1994	1995	0.0504	2.52E-02	2.5E-02																	
Large Scale Equip Test	2003	2008	0.571	9.52E-02									9.5E-02	9.5E-02	9.5E-02	9.5E-02	9.5E-02	9.5E-02				
Full Scale Hot	1999	2002	2.705	6.76E-01					6.8E-01	6.8E-01	6.8E-01	6.8E-01										
Total			3.4069		2.5E-02	1.1E-05	6.1E-05	6.1E-05	6.8E-01	6.8E-01	6.8E-01	6.8E-01	1.1E-01	1.1E-01	1.1E-01	1.1E-01	1.1E-01	1.1E-01	0.0E+00	0.0E+00	0.0E+00	0.0E+00
TOTAL ACCID + NONROUT			16.318		8.1E-02	5.6E-03	1.1E-02	1.1E-02	3.2E+00	3.2E+00	3.2E+00	3.2E+00	5.7E-01	5.7E-01	5.7E-01	5.7E-01	5.7E-01	5.7E-01	0.0E+00	0.0E+00	0.0E+00	0.0E+00

NOTE: NO TESTING SCHEDULED PAST 2011

[ ] = CHANGES TO BASELINE ALTERNATIVE

BASELINE ALTERNATIVE

ANNUAL SUMMARY RISK DATA

	Start Year	Stop Year	Initial PPG	Annual PPG	FY 95	FY 96	FY 97	FY 98	FY 99	FY 0	FY 1	FY 2	FY 3	FY 4	FY 5	FY 6	FY 7	FY 8	FY 9	FY 10	FY 11	FY 12
Retrieval-Accident																						
Large Pilot Plant	N/A	N/A	0	0.00E+00																		
Small Scale Integrated	N/A	N/A	0	0.00E+00																		
Small Scale Functional	N/A	N/A	0	0.00E+00																		
Bench Scale Hot	N/A	N/A	0	0.00E+00																		
Lab Scale Hot	N/A	N/A	0	0.00E+00																		
Bench Scale Simulant	N/A	N/A	0	0.00E+00																		
Lab Scale Simulant	N/A	N/A	0	0.00E+00																		
Pilot Scale Simulant	N/A	N/A	0	0.00E+00																		
Large Scale Equip Test	2003	2008	0.25	4.17E-02									4.2E-02	4.2E-02	4.2E-02	4.2E-02	4.2E-02	4.2E-02				
Full Scale Hot	1999	2002	2.5	6.25E-01					6.3E-01	6.3E-01	6.3E-01	6.3E-01										
Total			2.75		0.0E+00	0.0E+00	0.0E+00	0.0E+00	6.3E-01	6.3E-01	6.3E-01	6.3E-01	4.2E-02	4.2E-02	4.2E-02	4.2E-02	4.2E-02	4.2E-02	0.0E+00	0.0E+00	0.0E+00	0.0E+00
Retrieval-Nonrout. Maint																						
Large Pilot Plant	N/A	N/A	0	0.00E+00																		
Small Scale Integrated	N/A	N/A	0	0.00E+00																		
Small Scale Functional	N/A	N/A	0	0.00E+00																		
Bench Scale Hot	N/A	N/A	0	0.00E+00																		
Lab Scale Hot	N/A	N/A	0	0.00E+00																		
Bench Scale Simulant	N/A	N/A	0	0.00E+00																		
Lab Scale Simulant	N/A	N/A	0	0.00E+00																		
Pilot Scale Simulant	N/A	N/A	0	0.00E+00																		
Large Scale Equip Test	2003	2008	0.014	2.33E-03									2.3E-03	2.3E-03	2.3E-03	2.3E-03	2.3E-03	2.3E-03				
Full Scale Hot	1999	2002	0.07	1.75E-02					1.8E-02	1.8E-02	1.8E-02	1.8E-02										
Total			0.084		0.0E+00	0.0E+00	0.0E+00	0.0E+00	1.8E-02	1.8E-02	1.8E-02	1.8E-02	2.3E-03	2.3E-03	2.3E-03	2.3E-03	2.3E-03	2.3E-03	0.0E+00	0.0E+00	0.0E+00	0.0E+00
TOTAL ACCID + NONROUT			2.834		0.0E+00	0.0E+00	0.0E+00	0.0E+00	6.4E-01	6.4E-01	6.4E-01	6.4E-01	4.4E-02	4.4E-02	4.4E-02	4.4E-02	4.4E-02	4.4E-02	0.0E+00	0.0E+00	0.0E+00	0.0E+00

NOTE: NO TESTING SCHEDULED PAST 2011

BASELINE ALTERNATIVE

ANNUAL SUMMARY RISK DATA

	Start Year	Stop Year	Initial PPG	Annual PPG	FY 95	FY 96	FY 97	FY 98	FY 99	FY 0	FY 1	FY 2	FY 3	FY 4	FY 5	FY 6	FY 7	FY 8	FY 9	FY 10	FY 11	FY 12
Pretreatment-Accident																						
Large Pilot Plant	N/A	N/A	0	0.00E+00																		
Small Scale Integrated	N/A	N/A	0	0.00E+00																		
Small Scale Functional	N/A	N/A	0	0.00E+00																		
Bench Scale Hot	1996	1996	0.006	2.00E-03		2.0E-03	2.0E-03	2.0E-03														
Lab Scale Hot	1994	1997	0.006	1.50E-03	1.5E-03	1.5E-03	1.5E-03															
Bench Scale Simulant	1995	1996	0.0051	2.55E-03	2.6E-03	2.6E-03																
Lab Scale Simulant	1994	1997	0.0002	6.00E-05	5.0E-05	5.0E-05	5.0E-05															
Pilot Scale Simulant	1994	1995	0.0052	2.60E-03	2.6E-03																	
Large Scale Equip Test	2003	2006	0.026	4.33E-03									4.3E-03	4.3E-03	4.3E-03	4.3E-03	4.3E-03	4.3E-03				
Full Scale Hot	2006	2009	0.155	7.75E-02														7.8E-02	7.8E-02			
Total			0.2035		6.7E-03	6.1E-03	3.6E-03	2.0E-03	0.0E+00	0.0E+00	0.0E+00	0.0E+00	4.3E-03	4.3E-03	4.3E-03	4.3E-03	4.3E-03	8.2E-02	7.8E-02	0.0E+00	0.0E+00	0.0E+00
Pretreat.-Nonrout. Maint																						
Large Pilot Plant	N/A	N/A	0	0.00E+00																		
Small Scale Integrated	N/A	N/A	0	0.00E+00																		
Small Scale Functional	N/A	N/A	0	0.00E+00																		
Bench Scale Hot	1996	1996	0.0012	4.00E-04		4.0E-04	4.0E-04	4.0E-04														
Lab Scale Hot	1994	1997	0.0012	3.00E-04	3.0E-04	3.0E-04	3.0E-04															
Bench Scale Simulant	1995	1996	0.0011	5.50E-04	5.5E-04	5.5E-04																
Lab Scale Simulant	1994	1997	0.0002	5.00E-05	5.0E-05	5.0E-05	5.0E-05															
Pilot Scale Simulant	1994	1995	0.0649	3.25E-02	3.2E-02																	
Large Scale Equip Test	2003	2006	1.0841	1.81E-01									1.8E-01	1.8E-01	1.8E-01	1.8E-01	1.8E-01	1.8E-01				
Full Scale Hot	2006	2009	5.425	2.71E+00														2.7E+00	2.7E+00			
Total			6.5777		3.3E-02	1.3E-03	7.5E-04	4.0E-04	0.0E+00	0.0E+00	0.0E+00	0.0E+00	1.8E-01	1.8E-01	1.8E-01	1.8E-01	1.8E-01	2.9E+00	2.7E+00	0.0E+00	0.0E+00	0.0E+00
TOTAL ACCID + NONROUT			6.781		4.0E-02	7.4E-03	4.3E-03	2.4E-03	0.0E+00	0.0E+00	0.0E+00	0.0E+00	1.9E-01	1.9E-01	1.9E-01	1.9E-01	1.9E-01	3.0E+00	2.8E+00	0.0E+00	0.0E+00	0.0E+00

NOTE: NO TESTING SCHEDULED PAST 2011

BASELINE ALTERNATIVE

ANNUAL SUMMARY RISK DATA

	Start Year	Stop Year	Initial PPG	Annual PPG	FY 95	FY 96	FY 97	FY 98	FY 99	FY 0	FY 1	FY 2	FY 3	FY 4	FY 5	FY 6	FY 7	FY 8	FY 9	FY 10	FY 11	FY 12
LLW-Accident																						
Large Pilot Plant	N/A	N/A	0	0.00E+00																		
Small Scale Integrated	N/A	N/A	0	0.00E+00																		
Small Scale Functional	N/A	N/A	0	0.00E+00																		
Bench Scale Hot	1995	2003	0.05	5.56E-03	5.6E-03	5.6E-03	5.6E-03	5.6E-03	5.6E-03	5.6E-03	5.6E-03	5.6E-03	5.6E-03									
Lab Scale Hot	1995	2003	0.05	5.56E-03	5.6E-03	5.6E-03	5.6E-03	5.6E-03	5.6E-03	5.6E-03	5.6E-03	5.6E-03	5.6E-03									
Bench Scale Simulant	1997	1998	0.01	5.00E-03			5.0E-03	5.0E-03														
Lab Scale Simulant	1998	2003	0.001	1.25E-04		1.3E-04	1.3E-04	1.3E-04	1.3E-04	1.3E-04	1.3E-04	1.3E-04	1.3E-04									
Pilot Scale Simulant	1995	2003	0.05	5.56E-03	5.6E-03	5.6E-03	5.6E-03	5.6E-03	5.6E-03	5.6E-03	5.6E-03	5.6E-03	5.6E-03									
Large Scale Equip Test	2003	2006	2.5	4.17E-01									4.2E-01	4.2E-01	4.2E-01	4.2E-01	4.2E-01	4.2E-01				
Full Scale Hot	2005	2006	10	5.00E+00											5.0E+00	5.0E+00						
Total			12.661		1.7E-02	1.7E-02	2.2E-02	2.2E-02	1.7E-02	1.7E-02	1.7E-02	1.7E-02	4.3E-01	4.2E-01	5.4E+00	5.4E+00	4.2E-01	4.2E-01	0.0E+00	0.0E+00	0.0E+00	0.0E+00
LLW Nonrout. Maint																						
Large Pilot Plant	N/A	N/A	0	0.00E+00																		
Small Scale Integrated	N/A	N/A	0	0.00E+00																		
Small Scale Functional	N/A	N/A	0	0.00E+00																		
Bench Scale Hot	1995	2003	0.0001	1.11E-05	1.1E-05	1.1E-05	1.1E-05	1.1E-05	1.1E-05	1.1E-05	1.1E-05	1.1E-05	1.1E-05									
Lab Scale Hot	1995	2003	0.0001	1.11E-05	1.1E-05	1.1E-05	1.1E-05	1.1E-05	1.1E-05	1.1E-05	1.1E-05	1.1E-05	1.1E-05									
Bench Scale Simulant	1997	1998	0.0001	5.00E-05			5.0E-05	5.0E-05														
Lab Scale Simulant	1998	2003	0.0001	1.25E-05		1.3E-05	1.3E-05	1.3E-05	1.3E-05	1.3E-05	1.3E-05	1.3E-05	1.3E-05									
Pilot Scale Simulant	1995	2003	0.1003	1.11E-02	1.1E-02	1.1E-02	1.1E-02	1.1E-02	1.1E-02	1.1E-02	1.1E-02	1.1E-02	1.1E-02	1.1E-02	1.1E-02							
Large Scale Equip Test	2003	2006	1.021	1.70E-01									1.7E-01	1.7E-01	1.7E-01	1.7E-01	1.7E-01	1.7E-01				
Full Scale Hot	2005	2006	3.655	1.78E+00											1.8E+00	1.8E+00						
Total			4.6767		1.1E-02	1.1E-02	1.1E-02	1.1E-02	1.1E-02	1.1E-02	1.1E-02	1.1E-02	1.8E-01	1.8E-01	2.0E+00	1.9E+00	1.7E-01	1.7E-01	0.0E+00	0.0E+00	0.0E+00	0.0E+00
TOTAL ACCID + NONROUT			17.338		2.8E-02	2.8E-02	3.3E-02	3.3E-02	2.8E-02	2.8E-02	2.8E-02	2.8E-02	6.1E-01	6.0E-01	7.4E+00	7.4E+00	5.9E-01	5.9E-01	0.0E+00	0.0E+00	0.0E+00	0.0E+00

NOTE: NO TESTING SCHEDULED PAST 2011

BASELINE ALTERNATIVE

ANNUAL SUMMARY RISK DATA

	Start Year	Stop Year	Initial PPG	Annual PPG	FY 95	FY 96	FY 97	FY 98	FY 99	FY 0	FY 1	FY 2	FY 3	FY 4	FY 5	FY 6	FY 7	FY 8	FY 9	FY 10	FY 11	FY 12
HLW-Accident																						
Large Pilot Plant	N/A	N/A	0	0.00E+00																		
Small Scale Integrated	N/A	N/A	0	0.00E+00																		
Small Scale Functional	N/A	N/A	0	0.00E+00																		
Bench Scale Hot	1995	2003	0.05	5.56E-03	5.6E-03	5.6E-03	5.6E-03	5.6E-03	5.6E-03	5.6E-03	5.6E-03	5.6E-03	5.6E-03									
Lab Scale Hot	1994	1995	0.05	2.50E-02	2.5E-02																	
Bench Scale Simulant	1997	1998	0.01	5.00E-03			5.0E-03	5.0E-03														
Lab Scale Simulant	1994	1995	0.001	5.00E-04	5.0E-04																	
Pilot Scale Simulant	1994	1995	0.05	2.50E-02	2.5E-02																	
Large Scale Equip Test	2003	2008	2.5	4.17E-01									4.2E-01	4.2E-01	4.2E-01	4.2E-01	4.2E-01	4.2E-01				
Full Scale Hot	1999	2002	10	2.50E+00					2.5E+00	2.5E+00	2.5E+00	2.5E+00										
Total			12.661		5.6E-02	5.6E-03	1.1E-02	1.1E-02	2.5E+00	2.5E+00	2.5E+00	2.5E+00	4.2E-01	4.2E-01	4.2E-01	4.2E-01	4.2E-01	4.2E-01	0.0E+00	0.0E+00	0.0E+00	0.0E+00
HLW-Nonrout. Maint																						
Large Pilot Plant	N/A	N/A	0	0.00E+00																		
Small Scale Integrated	N/A	N/A	0	0.00E+00																		
Small Scale Functional	N/A	N/A	0	0.00E+00																		
Bench Scale Hot	1995	2003	0.0001	1.11E-05	1.1E-05	1.1E-05	1.1E-05	1.1E-05	1.1E-05	1.1E-05	1.1E-05	1.1E-05	1.1E-05									
Lab Scale Hot	1994	1995	0.0001	5.00E-05	5.0E-05																	
Bench Scale Simulant	1997	1998	0.0001	5.00E-05			5.0E-05	5.0E-05														
Lab Scale Simulant	1994	1995	0.0001	5.00E-05	5.0E-05																	
Pilot Scale Simulant	1994	1995	0.0504	2.52E-02	2.5E-02																	
Large Scale Equip Test	2003	2008	0.671	9.52E-02									9.5E-02	9.5E-02	9.5E-02	9.5E-02	9.5E-02	9.5E-02				
Full Scale Hot	1999	2002	2.705	6.76E-01					6.8E-01	6.8E-01	6.8E-01	6.8E-01										
Total			3.3268		2.5E-02	1.1E-05	6.1E-05	6.1E-05	6.8E-01	6.8E-01	6.8E-01	6.8E-01	9.5E-02	9.5E-02	9.5E-02	9.5E-02	9.5E-02	9.5E-02	0.0E+00	0.0E+00	0.0E+00	0.0E+00
TOTAL ACCID + NONROUT			15.988		8.1E-02	5.6E-03	1.1E-02	1.1E-02	3.2E+00	3.2E+00	3.2E+00	3.2E+00	5.2E-01	5.1E-01	5.1E-01	5.1E-01	5.1E-01	5.1E-01	0.0E+00	0.0E+00	0.0E+00	0.0E+00

NOTE: NO TESTING SCHEDULED PAST 2011

APPENDIX D-6: RISK ANALYSIS FACTORS

This page intentionally left blank.

The following information details the basic assumptions made and discussed within this appendix.

D.6.1 Worker Risk Category Definitions

All worker risks are subdivided into the following worker categories:

- Management and Engineers
- Construction/Decontamination and Decommissioning (D&D)
- Maintenance Crafts
- Operators
- Infrastructure Staff

D.6.2 Transportation Risks (TWRS Program Operations and Testing)

Table D.6-1. Transportation Risk Factors.

Factor Category	Risk
Fatalities per mile	6.06E-09
Injuries per mile	1.24E-08

Table D.6-2. Transportation Risk Variables - Category Susceptible to Risks.

Worker Category	Percentage Susceptible to Transportation Risks
Management and Engineers	100%
Construction/D&D	100%
Maintenance Crafts	100%
Operators	100%
Infrastructure	100%

Table D.6-3. Transportation Risk Variables - Miles Driven.

Worker Category	Miles Driven to Work per Year
Management and Engineers	15,000
Construction/D&D	15,000
Maintenance Crafts	15,000
Operators	15,000
Infrastructure	4,000

Table D.6-4. Transportation Risk Variables - Formulas.

Risk Area	Formula for Calculation
Injuries	Traffic injuries risks per year = (average miles driven by non-infrastructure workers x 1.24E-08 x number of non-infrastructure person-years/year) + (average miles driven by infrastructure workers x 1.24E-08 x number of infrastructure person-years/year)
Fatalities	Traffic fatalities risks per year = (average miles driven by non-infrastructure workers x 6.06E-09 x number of non-infrastructure person-years/year) + (average miles driven by infrastructure workers x 6.06E-09 x number of infrastructure person-years/year)

D.6.3 Industrial Risk (TWRS Program Operations and Testing)

Table D.6-5. Industrial Risk Factors - Injuries.

Worker Category	Industrial Injury Risk Factor (injuries/person year)
Management and Engineers	0.028
Construction/D&D	0.100
Maintenance Crafts	0.055
Operators	0.041
Infrastructure	0.000

Table D.6-6. Industrial Risk Factors - Fatalities.

Worker Category	Industrial Fatality Risk Factor (fatalities/person-year)
Management and Engineers	5.00E-05
Construction/D&D	3.50E-04
Maintenance Crafts	4.50E-05
Operators	4.50E-05
Infrastructure	0.00

Table D.6-7. Industrial Risk Variables - Category Susceptible to Risks.

Worker Category	Percentage Susceptible to Industrial Risks
Management and Engineers	100%
Construction/D&D	100%
Maintenance Crafts	100%
Operators	100%
Infrastructure	0%

Table D.6-8. Industrial Risk Variables - Formulas.

Risk Area	Formula for Calculation
Injuries	Industrial injuries risks per year = (number of person-years/years) x (category factor injuries/person-year)
Fatalities	Industrial fatalities risk per year = (number of person-year/years) x (category factor fatalities/person-year)

D.6.4 Radiation Exposure Risk (TWRS Program Operations)*

* Radiation doses were only calculated during actual function operational periods.

Table D.6-9. Radiation Risk Factors.

Factor Category	Factor Amount
Hanford Action Level	500 mrem
Fatal Cancer Risk Factor	2.50E-04 fatal cancers/rem

Table D.6-10. Radiation Risk Variables.

Worker Category	Percentage of Workers Susceptible to Radiological Exposure for TWRS Operations
Management and Engineers	30
Construction/D&D	50
Maintenance Crafts	100
Operators	100
Infrastructure	0

Table D.6-11 presents the calculated percentages assigned to each of the 13 modules based on their function involvement, the breakdown of the units into the associated individual modules, and the unit radiological designation.

Table D.6-12. Industrial Risk Variables - Formulas.

Risk Area	Formula for Calculation
Average Dose by Unit Type	High-level units estimated average dose = (0.8 action level/person-year) x (500 mrem/action level) = 400 mrem/person-year Low-level units estimated average dose = (0.3 action level/person-year) x (mrem/action level) = 150 mrem/person-year Cold units estimated average dose = (0.1 action level/person-year) x (mrem/action level) = 50 mrem/person-year
Total Average Dose per Module	Summation of all average doses for all modules and types of units (e.g., high-level, low-level, and cold)
Fatal Cancer Risk	Fatal cancer risk for each module = (Module average dose in mrem) x (1.0E-03 rem/mrem) x (2.5E-04 fatal cancers/rem)

Table D.6-11. Breakdown of Functional Operations. (Page 1 of 2)

Function	Module	Percentage of Module in Function	Unit	Percentage of Unit in Module	Unit Designation
Retrieval	1	84	A	20	High-level
Retrieval	1	84	B	30	High-level
Retrieval	1	84	C	50	Cold
Retrieval	2	16	A	3	High-level
Retrieval	2	16	B	3	High-level
Retrieval	2	16	C	3	High-level
Retrieval	2	16	D	20	High-level
Retrieval	2	16	E	30	High-level
Retrieval	2	16	F	40	Cold
Pretreatment	3	39	A	25	Cold
Pretreatment	3	39	B	25	High-level
Pretreatment	3	39	C	25	High-level
Pretreatment	3	39	D	25	High-level
Pretreatment	4	36	A	25	High-level
Pretreatment	4	36	B	15	High-level
Pretreatment	4	36	C	25	High-level
Pretreatment	4	36	D	20	High-level
Pretreatment	4	36	E	5	High-level
Pretreatment	4	36	F	10	Low-level
Pretreatment	11	25	A	33	Low-level
Pretreatment	11	25	B	33	Low-level
Pretreatment	11	25	C	33	Low-level
LLW Vitrification	5	29	A	15	Low-level
LLW Vitrification	5	29	B	35	Low-level
LLW Vitrification	5	29	C	15	Low-level
LLW Vitrification	5	29	D	15	Low-level
LLW Vitrification	5	29	E	20	Low-level
LLW Vitrification	6	25	A	25	Low-level
LLW Vitrification	6	25	B	50	Low-level

Table D.6-11. Breakdown of Functional Operations. (Page 2 of 2)

Function	Module	Percentage of Module in Function	Unit	Percentage of Unit in Module	Unit Designation
LLW Vitrification	6	25	C	15	Low-level
LLW Vitrification	6	25	D	10	Low-level
LLW Vitrification	10	20	A	15	High-level
LLW Vitrification	10	20	B	15	Low-level
LLW Vitrification	10	20	C	15	Low-level
LLW Vitrification	10	20	D	15	Low-level
LLW Vitrification	10	20	E	15	High-level
LLW Vitrification	10	20	F	5	Low-level
LLW Vitrification	10	20	G	15	High-level
LLW Vitrification	10	20	H	5	High-level
LLW Vitrification	12	26	A	20	Cold
LLW Vitrification	12	26	B	20	Cold
LLW Vitrification	12	26	C	20	Cold
LLW Vitrification	12	26	D	20	Cold
LLW Vitrification	12	26	E	20	Cold
HLW Vitrification	7	18	A	50	High-level
HLW Vitrification	7	18	B	50	High-level
HLW Vitrification	8	34	A	30	High-level
HLW Vitrification	8	34	B	30	High-level
HLW Vitrification	8	34	C	30	High-level
HLW Vitrification	8	34	D	10	High-level
HLW Vitrification	9	30	A	90	High-level
HLW Vitrification	9	30	B	10	High-level
HLW Vitrification	13	18	A	14	Low-level
HLW Vitrification	13	18	B	14	Cold
HLW Vitrification	13	18	C	14	Low-level
HLW Vitrification	13	18	D	14	High-level
HLW Vitrification	13	18	E	14	Cold
HLW Vitrification	13	18	F	14	Low-level
HLW Vitrification	13	18	G	14	Cold

D.6.5 Radiation Exposure Risk (Testing Alternatives)*

Table D.6-13. Radiation Risk Factors.

Factor Category	Factor Amount
Hanford Action Level	500 mrem
Fatal Cancer Risk Factor	2.50E-04 fatal cancers/rem

Table D.6-14. Radiation Risk Variables.

Worker Category	Percentage of Workers Susceptible to Radiological Exposure for Testing
Management and Engineers	20
Construction/Decommissioning	20
Maintenance Crafts	80
Operators	80
Infrastructure	0

Tables D.6-15 and D.6-16 presents the calculated percentages assigned to each of the 13 modules based on their function involvement, the breakdown of the units into the associated individual modules, and the unit radiological designation.

* Radiation doses were only calculated during actual function operational periods.

Table D.6-15. Breakdown of Tests per Functional Area (Baseline Alternative). (Page 1 of 2)

Test	Test Percentage	Designation
Retrieval		
Large pilot plant for hot functional test	0	High-level
Small-scale integrated pilot plant	0	High-level
Small-scale functional hot pilot plant	0	High-level
Bench-scale hot tests	0	High-level
Lab-scale hot tests	0	Low-level
Bench-scale simulants and tracers	0	Cold
Lab-scale simulants and tracers	0	Cold
Pilot-scale simulant tests	0	Cold
Large-scale and full-scale equipment test	25	Cold
Full-scale hot demo. or process tests	75	High-level
Pretreatment		
Large pilot plant for hot functional test	0	High-level
Small-scale integrated pilot plant	0	High-level
Small-scale functional hot pilot plant	0	High-level
Bench-scale hot tests	10	High-level
Lab-scale hot tests	10	Low-level
Bench-scale simulants and tracers	10	Cold
Lab-scale simulants and tracers	10	Cold
Pilot-scale simulant tests	10	Cold
Large-scale and full-scale equipment test	20	Cold
Full-scale hot demo. or process tests	30	High-level
LLW Melter		
Large pilot plant for hot functional test	00	Low-level
Small-scale integrated pilot plant	00	Low-level
Small-scale functional hot pilot plant	00	Low-level

Table D.6-15. Breakdown of Tests per Functional Area (Baseline Alternative). (Page 2 of 2)

Test	Test Percentage	Designation
Retrieval		
Bench-scale hot tests	20	Low-level
Lab-scale hot tests	20	Low-level
Bench-scale simulants and tracers	10	Cold
Lab-scale simulants and tracers	10	Cold
Pilot-scale simulant tests	10	Cold
Large-scale and full-scale equipment test	20	Cold
Full-scale hot demo. or process tests	10	Low-level
HLW Melter		
Large pilot plant for hot functional test	00	High-level
Small-scale integrated pilot plant	00	High-level
Small-scale functional hot pilot plant	00	High-level
Bench-scale hot tests	10	High-level
Lab-scale hot tests	10	Low-level
Bench-scale simulants and tracers	10	Cold
Lab-scale simulants and tracers	10	Cold
Pilot-scale simulant tests	10	Cold
Large-scale and full-scale equipment test	20	Cold
Full-scale hot demo. or process tests	30	High-level

Table D.6-16. Breakdown of Tests per Functional Area (Difference between Alternatives 1, 2, and 3 and Baseline). (Page 1 of 2)

Tests	Test Percentage	Designation
Alternative 1 - LLW		
Large pilot plant for hot functional test	0	High-level
Small-scale integrated pilot plant	0	High-level
Small-scale functional hot pilot plant	54	High-level
Bench-scale hot tests	9	High-level
Lab-scale hot tests	9	Low-level
Bench-scale simulants and tracers	5	Cold
Lab-scale simulants and tracers	5	Cold
Pilot-scale simulant tests	5	Cold
Large-scale and full-scale equipment test	9	Cold
Full-scale hot demo. or process tests	5	High-level
Alternative 1 - HLW		
Large pilot plant for hot functional test	33	High-level
Small-scale integrated pilot plant	0	High-level
Small-scale functional hot pilot plant	0	High-level
Bench-scale hot tests	7	High-level
Lab-scale hot tests	7	Low-level
Bench-scale simulants and tracers	7	Cold
Lab-scale simulants and tracers	7	Cold
Pilot-scale simulant tests	7	Cold
Large-scale and full-scale equipment test	13	Cold
Full-scale hot demo. or process tests	20	High-level
Alternative 2 - HLW		
Large pilot plant for hot functional test	0	Low-level
Small-scale integrated pilot plant	46	Low-level
Small-scale functional hot pilot plant	0	Low-level
Bench-scale hot tests	6	Low-level
Lab-scale hot tests	6	Low-level

Table D.6-16. Breakdown of Tests per Functional Area (Difference between Alternatives 1, 2, and 3 and Baseline). (Page 2 of 2)

Tests	Test Percentage	Designation
Bench-scale simulants and tracers	6	Cold
Lab-scale simulants and tracers	6	Cold
Pilot-scale simulant tests	6	Cold
Large-scale and full-scale equipment test	11	Cold
Full-scale hot demo. or process tests	16	Low-level
Alternative 3 - HLW		
Large pilot plant for hot functional test	0	High-level
Small-scale integrated pilot plant	0	High-level
Small-scale functional hot pilot plant	34	High-level
Bench-scale hot tests	7	High-level
Lab-scale hot tests	7	Low-level
Bench-scale simulants and tracers	7	Cold
Lab-scale simulants and tracers	7	Cold
Pilot-scale simulant tests	7	Cold
Large-scale and full-scale equipment test	13	Cold
Full-scale hot demo. or process tests	20	High-level

Table D.6-17. Industrial Risk Variables - Formulas.

Risk Area	Formula for Calculation
Average Dose by Test Type	High-level test estimated average dose = (0.8 action level/person-year) x (500 mrem/action level) = 400 mrem/person-year Low-level test estimated average dose = (0.3 action level/person-year) x (mrem/action level) = 150 mrem/person-year "Cold" test estimated average dose = (0.1 action level/person-year) x (mrem/action level) = 50 mrem/person-year
Total Average Dose per Test	Summation of all average doses for all tests (e.g., high, low, and "cold")
Fatal Cancer Risk	Fatal cancer risk for each test = (test average dose in mrem) x (1.0E-03 rem/mrem) x (2.5E-04 fatal cancers/rem)

APPENDIX D-7: ANNUALIZED INJURY AND DEATH RISKS

This page intentionally left blank.

OPERATIONS																	
SUMMARY RISK DATA																	
	FY 95	FY 96	FY 97	FY 98	FY 99	FY 00	FY 01	FY 02	FY 03	FY 04	FY 05	FY 06	FY 07	FY 08	FY 09	FY 10	FY 11
Industrial Injury Risk (injuries)																	
Retrieval	4.3339	1.44147	0.20225	23.3855	20.4666	19.3003	37.4533	49.8298	52.5482	56.7641	56.6141	56.5001	53.2999	52.0753	64.6631	75.5074	78.9182
Pretreatment(1)	5.10317	4.94649	8.39847	12.4827	25.8586	35.3114	41.2647	29.0789	27.8254	45.9992	45.5601	38.0098	26.8295	26.9114	26.7086	26.6511	26.6511
LLW Melter	3.61641	4.73445	3.42708	19.6222	44.244	66.8945	68.6535	73.1759	25.2468	20.2324	14.1719	45.1429	46.6586	47.2632	48.8005	48.8016	48.8029
HLW Melter	1.34011	3.98315	2.12408	6.90305	7.91124	20.6678	52.8974	135.982	122.913	151.023	127.805	119.629	62.9998	19.2709	14.871	3.58379	53.4475
Totals	14.3936	15.1056	14.1519	62.3935	98.4805	142.174	200.269	288.067	228.533	274.019	244.151	259.282	189.788	145.521	155.043	154.544	207.82
Industrial Death Risk (fatalities)																	
Retrieval	0.00774	0.00257	0.00036	0.04176	0.03655	0.03446	0.10028	0.13796	0.1364	0.13095	0.1306	0.13034	0.12296	0.12013	0.14917	0.17419	0.18206
Pretreatment(1)	0.00911	0.00883	0.015	0.02229	0.0691	0.10732	0.13149	0.09428	0.08944	0.11922	0.12221	0.08558	0.02897	0.02906	0.02884	0.02878	0.02878
LLW Melter	0.00646	0.00845	0.00612	0.05786	0.1347	0.20893	0.21442	0.22854	0.02726	0.02185	0.0153	0.04875	0.05038	0.05104	0.0527	0.0527	0.0527
HLW Melter	0.00239	0.00711	0.00379	0.01233	0.01413	0.03691	0.13098	0.40099	0.36245	0.49727	0.39624	0.35677	0.15676	0.02081	0.01606	0.00387	0.05771
Totals	0.0257	0.02697	0.02527	0.13424	0.25448	0.38762	0.57717	0.86178	0.61555	0.76929	0.66436	0.62144	0.35907	0.22104	0.24677	0.25953	0.32125
Transportation Risk (injuries)																	
Retrieval	0.03008	0.01001	0.0014	0.15689	0.13731	0.12949	0.15684	0.18244	0.17809	0.20113	0.2006	0.20019	0.18886	0.18452	0.22912	0.26754	0.27963
Pretreatment(1)	0.03542	0.034	0.05773	0.08523	0.10941	0.11246	0.11376	0.07555	0.07463	0.15774	0.13822	0.13103	0.12266	0.12303	0.1221	0.12184	0.12184
LLW Melter	0.0251	0.03286	0.02299	0.06712	0.13935	0.19582	0.20097	0.21421	0.11542	0.0925	0.06479	0.20638	0.21331	0.21607	0.2231	0.2231	0.22311
HLW Melter	0.0083	0.0072	0.01474	0.04792	0.07284	0.13866	0.25162	0.46511	0.42041	0.36973	0.33647	0.32851	0.20286	0.0881	0.06799	0.01638	0.24434
Totals	0.09891	0.08407	0.09687	0.35716	0.45892	0.57643	0.72319	0.93731	0.78855	0.8211	0.74008	0.86611	0.72768	0.61172	0.85483	0.62887	0.86892
Transportation Risk (fatalities)																	
Retrieval	0.0147	0.00489	0.00069	0.07668	0.0671	0.06328	0.07665	0.08916	0.08704	0.09829	0.09803	0.09784	0.0923	0.09017	0.11197	0.13075	0.13666
Pretreatment(1)	0.01731	0.01662	0.02821	0.04166	0.05347	0.05496	0.0556	0.03692	0.03647	0.07709	0.06755	0.06403	0.05994	0.06013	0.05967	0.05954	0.05954
LLW Melter	0.01241	0.01625	0.01127	0.03286	0.06822	0.09584	0.09836	0.10484	0.0571	0.04576	0.03205	0.10209	0.10552	0.10689	0.11036	0.11037	0.11037
HLW Melter	0.00406	0.00352	0.00721	0.02342	0.0356	0.06776	0.12297	0.22731	0.20546	0.18069	0.16444	0.16055	0.09914	0.04306	0.03323	0.00801	0.11941
Totals	0.04848	0.04128	0.04737	0.17461	0.17461	0.28185	0.35358	0.45823	0.38606	0.40183	0.36207	0.42451	0.3569	0.30024	0.4191	0.30867	0.42598
Radiation Exposure Risk (fatal cancers)																	
Retrieval	0	0	0	0	0	0.01189	0.01667	0.02263	0.02957	0.03881	0.03871	0.03863	0.03644	0.0356	0.04421	0.05162	0.05395
Pretreatment(1)	0	0	0	0	0	0	0	0	0	0	0.03244	0.03495	0.03981	0.03993	0.03963	0.03954	0.03954
LLW Melter	0	0	0	0	0	0	0	0	0	0	0.01066	0.03395	0.03509	0.03554	0.0367	0.0367	0.0367
HLW Melter	0	0	0	0	0	0	0	0	0	0	0	0	0	0	0.02651	0.00639	0.09527
Totals	0	0	0	0	0	0.01189	0.01667	0.02263	0.02957	0.03881	0.08181	0.10753	0.11134	0.11108	0.14705	0.13425	0.22547

OPERATIONS																	
SUMMARY RISK DATA																	
	FY 12	FY 13	FY 14	FY 15	FY 16	FY 17	FY 18	FY 19	FY 20	FY 21	FY 22	FY 23	FY 24	FY 25	FY 26	FY 27	FY 28
Industrial Injury Risk (injuries)																	
Retrieval	82.3062	79.5137	78.9757	79.0338	50.5063	50.4573	48.8071	54.9772	44.8343	44.6036	43.6238	41.1576	1.27375	1.15128	1.05333	0.96505	0.9677
Pretreatment(1)	26.6511	26.6393	26.6511	26.7196	26.7805	26.7569	26.7569	26.7687	36.4842	80.9492	4.26435	0	0	0	0	0	0
LLW Melter	48.7896	48.771	48.8208	48.8306	48.226	46.5971	46.025	44.4079	43.7555	41.835	247.323	250.918	169.81	87.002	14.7074	0.32987	0.03478
HLW Melter	53.1037	52.9249	52.6266	52.6066	52.6617	51.9865	51.8203	51.7371	51.7441	51.4977	51.3852	51.322	51.4169	51.0544	50.9503	50.8656	50.9808
Totals	210.851	207.849	207.074	207.191	178.175	175.798	173.409	177.891	176.818	218.885	346.596	343.398	222.5	139.208	66.711	52.1605	51.9833
Industrial Death Risk (fatalities)																	
Retrieval	0.19778	0.19107	0.18978	0.18779	0.09884	0.09874	0.09551	0.18102	0.14763	0.14687	0.14364	0.13552	0.00419	0.00379	0.00347	0.00318	0.00319
Pretreatment(1)	0.02878	0.02877	0.02878	0.02885	0.02892	0.02889	0.02889	0.02891	0.0714	0.26654	0.01404	0	0	0	0	0	0
LLW Melter	0.05268	0.05266	0.05272	0.05273	0.05207	0.05032	0.0497	0.04795	0.04725	0.04517	0.81436	0.8262	0.55913	0.28647	0.04843	0.00109	0.00011
HLW Melter	0.05734	0.05715	0.05683	0.05681	0.05686	0.05614	0.05596	0.05587	0.05587	0.05561	0.05549	0.05542	0.05552	0.05513	0.05502	0.05493	0.05505
Totals	0.33658	0.32965	0.3281	0.32618	0.10691	0.23408	0.23006	0.31375	0.32214	0.51419	1.02753	1.01713	0.61885	0.34539	0.10691	0.05919	0.05835
Transportation Risk (injuries)																	
Retrieval	0.27754	0.26813	0.26631	0.263	0.18839	0.18821	0.18205	0.13459	0.10976	0.1092	0.1068	0.10076	0.00312	0.00282	0.00258	0.00236	0.00237
Pretreatment(1)	0.12184	0.12179	0.12184	0.12215	0.12243	0.12232	0.12232	0.12238	0.13609	0.19818	0.01044	0	0	0	0	0	0
LLW Melter	0.22305	0.22296	0.22319	0.22324	0.22047	0.21303	0.21041	0.20302	0.20004	0.19126	0.60549	0.61429	0.41572	0.213	0.03601	0.00081	8.5E-05
HLW Melter	0.24277	0.24195	0.24059	0.2405	0.24075	0.23766	0.23691	0.23652	0.23656	0.23543	0.23492	0.23463	0.23506	0.2334	0.23293	0.23254	0.23307
Totals	0.8652	0.85483	0.85194	0.84889	0.77204	0.76122	0.75169	0.69651	0.68244	0.73406	0.95764	0.94968	0.6539	0.44922	0.27151	0.23571	0.23552
Transportation Risk (fatalities)																	
Retrieval	0.13564	0.13104	0.13015	0.12853	0.09207	0.09198	0.08897	0.06578	0.05364	0.05337	0.05219	0.04924	0.00152	0.00138	0.00126	0.00115	0.00116
Pretreatment(1)	0.05954	0.05952	0.05954	0.0597	0.05983	0.05978	0.05978	0.05981	0.06651	0.09685	0.0051	0	0	0	0	0	0
LLW Melter	0.11034	0.1103	0.11041	0.11043	0.10906	0.10538	0.10409	0.10043	0.09895	0.09461	0.29623	0.30054	0.20339	0.10421	0.01762	0.0004	4.2E-05
HLW Melter	0.11865	0.11825	0.11758	0.11753	0.11766	0.11615	0.11578	0.11559	0.11561	0.11506	0.11481	0.11466	0.11488	0 11407	0.11383	0.11364	0.1139
Totals	0.42417	0.4191	0.41768	0.4162	0.37862	0.37329	0.36862	0.34161	0.33471	0.35988	0.46833	0.46444	0.31979	0.31979	0.13271	0.11519	0.1151
Radiation Exposure Risk (fatal cancers)																	
Retrieval	0.05394	0.05211	0.05175	0.05314	0.04193	0.04189	0.04052	0.01799	0.01467	0.01459	0.01427	0.01347	0.00042	0.00038	0.00034	0.00032	0.00032
Pretreatment(1)	0.03954	0.03953	0.03954	0.03965	0.03974	0.0397	0.0397	0.03972	0.03873	0.03386	0.00178	0	0	0	0	0	0
LLW Melter	0.03669	0.03668	0.03671	0.03672	0.03627	0.03504	0.03461	0.03339	0.0329	0.03146	0.05243	0.05319	0.036	0.01844	0.00312	7E-05	7.4E-06
HLW Melter	0.09466	0.09434	0.09381	0.09378	0.09387	0.09267	0.09237	0.09223	0.09224	0.0918	0.0916	0.09149	0.09165	0.09101	0.09082	0.09067	0.09088
Totals	0.22483	0.22265	0.22182	0.22328	0.18333	0.20931	0.20721	0.18333	0.17854	0.17171	0.16008	0.15814	0.12807	0.10983	0.18333	0.09106	0.0912

OPERATIONS													
SUMMARY RISK DATA													
	FY 29	FY 30	FY 31	FY 32	FY 33	FY 34	FY 35	FY 36	FY 37	FY 38	FY 39	FY 40	Totals
Industrial Injury Risk (injuries)													
Retrieval	0.24325	0	0	0	0	0	0	0	0	0	0	0	1407.75
Pretreatment(1)	0	0	0	0	0	0	0	0	0	0	0	0	789.012
LLW Melter	0	0	0	0	0	0	0	0	0	0	0	0	1865.67
HLW Melter	124.089	86.1029	4.71574	1.36413	1.3604	1.3604	19.4539	21.8031	21.7435	21.7435	21.7435	2.44243	2115.96
Totals	124.332	86.1029	4.71574	1.36413	1.3604	1.3604	19.4539	21.8031	21.7435	21.7435	21.7435	2.44243	6178.4
Industrial Death Risk (fatalities)													
Retrieval	0.0008	0	0	0	0	0	0	0	0	0	0	0	3.4713
Pretreatment(1)	0	0	0	0	0	0	0	0	0	0	0	0	1.60106
LLW Melter	0	0	0	0	0	0	0	0	0	0	0	0	4.2772
HLW Melter	0.38472	0.26695	0.00509	0.00147	0.00147	0.00147	0.02101	0.02354	0.02348	0.02348	0.02348	0.00264	4.20634
Totals	0.38552	0.26695	0.00509	0.00147	0.00147	0.00147	0.02101	0.02354	0.02348	0.02348	0.02348	0.00264	13.5559
Transportation Risk (injuries)													
Retrieval	0.0006	0	0	0	0	0	0	0	0	0	0	0	4.94272
Pretreatment(1)	0	0	0	0	0	0	0	0	0	0	0	0	3.05844
LLW Melter	0	0	0	0	0	0	0	0	0	0	0	0	6.49227
HLW Melter	0.32669	0.22669	0.02156	0.00624	0.00622	0.00622	0.00622	0.00624	0.00622	0.00622	0.00622	0.0007	7.73282
Totals	0.32729	0.22669	0.02156	0.00624	0.00622	0.00622	0.00622	0.00624	0.00622	0.00622	0.00622	0.0007	22.2262
Transportation Risk (fatalities)													
Retrieval	0.00029	0	0	0	0	0	0	0	0	0	0	0	2.41555
Pretreatment(1)	0	0	0	0	0	0	0	0	0	0	0	0	1.49469
LLW Melter	0	0	0	0	0	0	0	0	0	0	0	0	3.19697
HLW Melter	0.15966	0.11078	0.01054	0.00305	0.00304	0.00304	0.00304	0.00305	0.00304	0.00304	0.00304	0.00034	3.7791
Totals	0.15995	0.11078	0.01054	0.00305	0.00304	0.00304	0.00304	0.00305	0.00304	0.00304	0.00304	0.00034	10.8863
Radiation Exposure Risk (fatal cancers)													
Retrieval	8E-05	0	0	0	0	0	0	0	0	0	0	0	0.83085
Pretreatment(1)	0	0	0	0	0	0	0	0	0	0	0	0	0.65735
LLW Melter	0	0	0	0	0	0	0	0	0	0	0	0	0.73906
HLW Melter	0.07616	0.05285	0.00841	0.00243	0.00243	0.00243	0.00243	0.00243	0.00243	0.00243	0.00243	0.00027	1.85517
Totals	0.07624	0.05285	0.00841	0.00243	0.00243	0.00243	0.00243	0.00243	0.00243	0.00243	0.00243	0.00027	4.08243

BASELINE (ALTERNATIVE 4)																	
SUMMARY RISK DATA																	
	FY 95	FY 96	FY 97	FY 98	FY 99	FY 00	FY 01	FY 02	FY 03	FY 04	FY 05	FY 06	FY 07	FY 08	FY 09	FY 10	FY 11
Industrial Injury Risk (injuries)																	
Retrieval	8.24653	10.8118	10.0371	5.51502	1.41831	0.87326	3.39207	4.71373	6.95809	0.5494	0.40782	0.40782	0.40782	0.40782	0	0	0
Pretreatment(1)	9.33014	8.59706	9.09494	12.9842	6.88707	5.36393	7.89401	5.88497	5.87753	3.67394	13.596	8.82729	2.07171	1.07937	0	0	0
LLW Melter	6.66937	3.83463	3.66213	3.99196	4.19754	3.71845	7.72913	9.15922	15.7909	11.4593	19.7549	2.76349	2.76349	2.75252	2.13004	2.11885	2.10482
HLW Melter	2.98748	3.74848	3.52244	0.47184	3.74848	0.57129	4.89105	6.5214	7.33658	0.78267	3.85843	7.85699	12.2366	16.2816	1.34659	43.8173	0
Totals	27.2335	26.992	26.3166	22.963	16.2514	10.5269	23.9063	26.2793	35.9631	16.4654	37.6171	19.8556	17.4797	20.5213	3.47664	45.9362	2.10482
Industrial Death Risk (fatalities)																	
Retrieval	0.01814	0.0217	0.0234	0.01514	0.00354	0.00199	0.01101	0.01478	0.01846	0.0006	0.00044	0.00044	0.00044	0.00044	0	0	0
Pretreatment(1)	0.02118	0.01952	0.02062	0.02186	0.01029	0.00804	0.0163	0.01607	0.01723	0.00416	0.01507	0.00978	0.00229	0.00119	0	0	0
LLW Melter	0.01269	0.00729	0.00672	0.00733	0.00745	0.00577	0.01917	0.02432	0.03329	0.01237	0.02133	0.00298	0.00298	0.00297	0.0023	0.00229	0.00227
HLW Melter	0.00568	0.00713	0.00647	0.00078	0.00713	0.00102	0.0161	0.02147	0.02416	0.00085	0.00417	0.00848	0.01321	0.01758	0.00145	0.04731	0
Totals	0.05769	0.05565	0.0572	0.0451	0.02842	0.01682	0.06258	0.07664	0.09313	0.01798	0.04101	0.02169	0.01892	0.02218	0.00375	0.0496	0.00227
Transportation Risk (injuries)																	
Retrieval	0.0402	0.05565	0.04554	0.02069	0.00602	0.00411	0.0085	0.01252	0.02172	0.00252	0.00186	0.00186	0.00186	0.00186	0	0	0
Pretreatment(1)	0.03592	0.03311	0.03523	0.05577	0.03251	0.0255	0.03072	0.01789	0.01662	0.01725	0.06268	0.04068	0.00953	0.00495	0	0	0
LLW Melter	0.03276	0.01888	0.0176	0.01928	0.02026	0.01864	0.02478	0.02787	0.05611	0.05174	0.08917	0.01249	0.01249	0.01244	0.00961	0.00956	0.0095
HLW Melter	0.0147	0.01842	0.01694	0.00269	0.01842	0.00381	0.01197	0.01597	0.01796	0.00355	0.01743	0.03548	0.05524	0.0735	0.00608	0.19774	0
Totals	0.12358	0.12606	0.1153	0.09843	0.07721	0.05206	0.07598	0.07425	0.11241	0.07506	0.17114	0.09051	0.07912	0.09275	0.01569	0.2073	0.0095
Transportation Risk (fatalities)																	
Retrieval	0.01965	0.0272	0.02225	0.01011	0.00294	0.00201	0.00415	0.00612	0.01061	0.00123	0.00091	0.00091	0.00091	0.00091	0	0	0
Pretreatment(1)	0.01755	0.01618	0.01722	0.02726	0.01589	0.01246	0.01501	0.00874	0.00812	0.00843	0.03063	0.01988	0.00466	0.00242	0	0	0
LLW Melter	0.01601	0.00923	0.0086	0.00942	0.0099	0.00911	0.01211	0.01362	0.02742	0.02528	0.04358	0.00611	0.00611	0.00608	0.0047	0.00467	0.00464
HLW Melter	0.00718	0.009	0.00828	0.00132	0.009	0.00186	0.00585	0.0078	0.00878	0.00174	0.00852	0.01734	0.027	0.03592	0.00297	0.09664	0
Totals	0.0604	0.0616	0.05635	0.0481	0.03773	0.02544	0.03713	0.03629	0.05494	0.03668	0.08364	0.04423	0.03867	0.04533	0.00767	0.10131	0.00464
Radiation Exposure Risk (fatal cancers)																	
Retrieval	0.00455	0.00681	0.00516	0.00201	0.00063	0.00045	0.00076	0.00128	0.00346	0.00068	0.00051	0.00051	0.00051	0.00051	0	0	0
Pretreatment(1)	0.00378	0.00348	0.00368	0.00765	0.00432	0.00334	0.00378	0.00174	0.00139	0.00281	0.01061	0.00689	0.00162	0.00085	0	0	0
LLW Melter	0.00154	0.00088	0.00091	0.00098	0.00108	0.00108	0.00145	0.00148	0.00385	0.00457	0.00788	0.0011	0.0011	0.0011	0.00085	0.00085	0.00084
HLW Melter	0.00138	0.00173	0.00174	0.00023	0.0002	0.0002	0.00064	0.00085	0.00096	0.00062	0.00308	0.00627	0.00977	0.01299	0.00107	0.03497	0
Totals	0.01125	0.01291	0.01149	0.01088	0.00623	0.00508	0.00664	0.00536	0.00967	0.00869	0.02208	0.01477	0.013	0.01545	0.00192	0.03582	0.00084

BASELINE (ALTERNATIVE 4)																	
SUMMARY RISK DATA																	
	FY 12	FY 13	FY 14	FY 15	FY 16	FY 17	FY 18	FY 19	FY 20	FY 21	FY 22	FY 23	FY 24	FY 25	FY 26	FY 27	FY 28
Industrial Injury Risk (injuries)																	
Retrieval	0	0	0	0	0	0	0	0	0	0	0	0	0	0	0	0	0
Pretreatment(1)	0	0	0	0	0	0	0	0	0	0	0	0	0	0	0	0	0
LLW Melter	2.08069	2.06775	0.81815	0.02347	0.0193	0.00658	0	0	0	0	0	0	0	0	0	0	0
HLW Melter	0	0	0	0	0	0	0	0	0	0	0	0	0	0	0	0	0
Totals	2.08069	2.06775	0.81815	0.02347	0.0193	0.00658	0	0	0	0	0	0	0	0	0	0	0
Industrial Death Risk (fatalities)																	
Retrieval	0	0	0	0	0	0	0	0	0	0	0	0	0	0	0	0	0
Pretreatment(1)	0	0	0	0	0	0	0	0	0	0	0	0	0	0	0	0	0
LLW Melter	0.00225	0.00223	0.00088	2.5E-05	2.1E-05	7.1E-06	0	0	0	0	0	0	0	0	0	0	0
HLW Melter	0	0	0	0	0	0	0	0	0	0	0	0	0	0	0	0	0
Totals	0.00225	0.00223	0.00088	2.5E-05	0	7.1E-06	0	0	0	0	0	0	0	0	0	0	0
Transportation Risk (injuries)																	
Retrieval	0	0	0	0	0	0	0	0	0	0	0	0	0	0	0	0	0
Pretreatment(1)	0	0	0	0	0	0	0	0	0	0	0	0	0	0	0	0	0
LLW Melter	0.00939	0.00933	0.00369	0.00011	8.7E-05	3E-05	0	0	0	0	0	0	0	0	0	0	0
HLW Melter	0	0	0	0	0	0	0	0	0	0	0	0	0	0	0	0	0
Totals	0.00939	0.00933	0.00369	0.00011	8.7E-05	3E-05	0	0	0	0	0	0	0	0	8.7E-05	0	0
Transportation Risk (fatalities)																	
Retrieval	0	0	0	0	0	0	0	0	0	0	0	0	0	0	0	0	0
Pretreatment(1)	0	0	0	0	0	0	0	0	0	0	0	0	0	0	0	0	0
LLW Melter	0.00459	0.00456	0.0018	5.2E-05	4.3E-05	1.5E-05	0	0	0	0	0	0	0	0	0	0	0
HLW Melter	0	0	0	0	0	0	0	0	0	0	0	0	0	0	0	0	0
Totals	0.00459	0.00456	0.0018	5.2E-05	0	1.5E-05	0	0	0	0	0	0	0	0	0	0	0
Radiation Exposure Risk (fatal cancers)																	
Retrieval	0	0	0	0	0	0	0	0	0	0	0	0	0	0	0	0	0
Pretreatment(1)	0	0	0	0	0	0	0	0	0	0	0	0	0	0	0	0	0
LLW Melter	0.00083	0.00083	0.00033	9.4E-06	7.7E-06	2.6E-06	0	0	0	0	0	0	0	0	0	0	0
HLW Melter	0	0	0	0	0	0	0	0	0	0	0	0	0	0	0	0	0
Totals	0.00083	0.00083	0.00033	9.4E-06	0	2.6E-06	0	0	0	0	0	0	0	0	0	0	0

BASELINE (ALTERNATIVE 4)													
SUMMARY RISK DATA													
	FY 29	FY 30	FY 31	FY 32	FY 33	FY 34	FY 35	FY 36	FY 37	FY 38	FY 39	FY 40	Totals
Industrial Injury Risk (injuries)													
Retrieval	0	0	0	0	0	0	0	0	0	0	0	0	54.1467
Pretreatment(1)	0	0	0	0	0	0	0	0	0	0	0	0	101.162
LLW Melter	0	0	0	0	0	0	0	0	0	0	0	0	109.617
HLW Melter	0	0	0	0	0	0	0	0	0	0	0	0	119.979
Totals	0	0	0	0	0	0	0	0	0	0	0	0	384.905
Industrial Death Risk (fatalities)													
Retrieval	0	0	0	0	0	0	0	0	0	0	0	0	0.13052
Pretreatment(1)	0	0	0	0	0	0	0	0	0	0	0	0	0.18357
LLW Melter	0	0	0	0	0	0	0	0	0	0	0	0	0.17896
HLW Melter	0	0	0	0	0	0	0	0	0	0	0	0	0.183
Totals	0	0	0	0	0	0	0	0	0	0	0	0	0.67605
Transportation Risk (injuries)													
Retrieval	0	0	0	0	0	0	0	0	0	0	0	0	0.22489
Pretreatment(1)	0	0	0	0	0	0	0	0	0	0	0	0	0.41835
LLW Melter	0	0	0	0	0	0	0	0	0	0	0	0	0.46582
HLW Melter	0	0	0	0	0	0	0	0	0	0	0	0	0.5099
Totals	0	0	0	0	0	0	0	0	0	0	0	0	1.61897
Transportation Risk (fatalities)													
Retrieval	0	0	0	0	0	0	0	0	0	0	0	0	0.10991
Pretreatment(1)	0	0	0	0	0	0	0	0	0	0	0	0	0.20445
LLW Melter	0	0	0	0	0	0	0	0	0	0	0	0	0.22765
HLW Melter	0	0	0	0	0	0	0	0	0	0	0	0	0.24919
Totals	0	0	0	0	0	0	0	0	0	0	0	0	0.79121
Radiation Exposure Risk (fatal cancers)													
Retrieval	0	0	0	0	0	0	0	0	0	0	0	0	0.02784
Pretreatment(1)	0	0	0	0	0	0	0	0	0	0	0	0	0.05594
LLW Melter	0	0	0	0	0	0	0	0	0	0	0	0	0.03356
HLW Melter	0	0	0	0	0	0	0	0	0	0	0	0	0.07673
Totals	0	0	0	0	0	0	0	0	0	0	0	0	0.19408

ALTERNATIVE 1																	
SUMMARY RISK DATA																	
	FY 95	FY 96	FY 97	FY 98	FY 99	FY 00	FY 01	FY 02	FY 03	FY 04	FY 05	FY 06	FY 07	FY 08	FY 09	FY 10	FY 11
Industrial Injury Risk (injuries)																	
Retrieval	8.22963	10.7949	9.98641	5.43568	10.7949	0.77011	1.08241	3.21925	6.14292	1.40582	1.32541	0.34665	0.34665	0.34665	0.24469	0.24469	0
Pretreatment(1)	9.38085	8.64776	9.24706	13.2248	8.64776	6.38065	7.71421	15.8029	23.4607	19.0691	14.5135	8.76612	2.01054	1.0182	0.24469	0.24469	0
LLW Melter	6.80434	3.94126	3.90359	4.35244	3.94126	5.14205	8.16217	22.8357	27.4754	28.0787	41.4135	5.32429	5.32429	5.31321	4.37559	4.36429	2.12587
HLW Melter	3.08563	3.85425	3.76251	0.79712	3.85425	5.29571	6.72384	20.1715	18.9365	17.2953	23.3519	10.4687	14.8922	18.9776	3.58431	46.4798	0
Totals	27.5005	27.2382	26.8996	23.81	27.2382	17.5885	23.6826	62.0294	76.0156	65.8489	80.6043	24.9058	22.5737	25.6557	8.44928	51.3334	2.12587
Industrial Death Risk (fatalities)																	
Retrieval	0.01811	0.02167	0.02331	0.01499	0.02167	0.0018	0.00341	0.00986	0.01578	0.00153	0.00143	0.00037	0.00037	0.00037	0.00026	0.00026	0
Pretreatment(1)	0.02127	0.01981	0.02089	0.02229	0.01961	0.00986	0.01464	0.04872	0.05191	0.02079	0.01606	0.00971	0.00222	0.00112	0.00026	0.00026	0
LLW Melter	0.01294	0.00749	0.00716	0.00797	0.00749	0.0083	0.01964	0.0693	0.07157	0.06496	0.08025	0.00575	0.00575	0.00574	0.00472	0.00471	0.0023
HLW Melter	0.00586	0.00732	0.0069	0.00136	0.00732	0.01655	0.02214	0.06642	0.06235	0.05332	0.05364	0.0113	0.01608	0.02049	0.00387	0.05019	0
Totals	0.05818	0.05609	0.05825	0.04661	0.05609	0.03651	0.05983	0.1943	0.20161	0.14059	0.15138	0.02714	0.02442	0.02772	0.00912	0.05543	0.0023
Transportation Risk (injuries)																	
Retrieval	0.04008	0.05553	0.04519	0.02016	0.05553	0.00342	0.00285	0.00886	0.01972	0.00642	0.00603	0.00158	0.00158	0.00158	0.00111	0.00111	0
Pretreatment(1)	0.03627	0.03346	0.03628	0.05739	0.03346	0.03232	0.03329	0.04217	0.08171	0.08727	0.06685	0.04041	0.00925	0.00467	0.00111	0.00111	0
LLW Melter	0.03356	0.01954	0.01919	0.02161	0.01954	0.02809	0.02839	0.06141	0.08489	0.09445	0.15396	0.02414	0.02414	0.02409	0.01983	0.01977	0.00959
HLW Melter	0.01532	0.01908	0.01853	0.00486	0.01908	0.01546	0.01646	0.04938	0.04636	0.04578	0.07912	0.04736	0.06732	0.08575	0.01625	0.20983	0
Totals	0.12524	0.12761	0.11919	0.10402	0.12761	0.07928	0.08099	0.16182	0.23268	0.23392	0.30596	0.11348	0.10229	0.1161	0.03831	0.23183	0.00959
Transportation Risk (fatalities)																	
Retrieval	0.01959	0.02714	0.02208	0.00985	0.02714	0.00167	0.00139	0.00433	0.00964	0.00314	0.00295	0.00077	0.00077	0.00077	0.00054	0.00054	0
Pretreatment(1)	0.01773	0.01635	0.01773	0.02805	0.01635	0.0158	0.01627	0.02061	0.03993	0.04265	0.03267	0.01975	0.00452	0.00228	0.00054	0.00054	0
LLW Melter	0.0164	0.00955	0.00938	0.01056	0.00955	0.01373	0.01387	0.03001	0.04149	0.04616	0.07524	0.0118	0.0118	0.01177	0.00969	0.00966	0.00469
HLW Melter	0.00749	0.00932	0.00906	0.00237	0.00932	0.00755	0.00804	0.02413	0.02266	0.02237	0.03867	0.02314	0.0329	0.04191	0.00794	0.10255	0
Totals	0.06121	0.06236	0.05825	0.05083	0.06236	0.03875	0.03958	0.07908	0.11371	0.11432	0.14953	0.05546	0.04999	0.05674	0.01872	0.1133	0.00469
Radiation Exposure Risk (fatal cancers)																	
Retrieval	0.00455	0.0068	0.00513	0.00197	0.00058	0.0004	0.00029	0.00097	0.00329	0.00174	0.00165	0.00043	0.00043	0.00043	0.00031	0.00031	0
Pretreatment(1)	0.0038	0.0035	0.00373	0.00774	0.00468	0.0037	0.00391	0.00304	0.01069	0.0151	0.01134	0.00684	0.00157	0.0008	0.0002	0.0002	0
LLW Melter	0.00198	0.00114	0.0012	0.00133	0.00169	0.00169	0.00197	0.00301	0.00587	0.00755	0.0141	0.00268	0.00268	0.00268	0.0022	0.0022	0.00107
HLW Melter	0.00188	0.00235	0.00243	0.00046	0.00093	0.0011	0.00117	0.0035	0.00329	0.00445	0.01334	0.01106	0.01574	0.02006	0.00379	0.04913	0
Totals	0.0122	0.01379	0.0125	0.01149	0.00787	0.00689	0.00734	0.01053	0.02314	0.02885	0.04043	0.02102	0.02043	0.02397	0.00649	0.05182	0.00107

ALTERNATIVE 1																	
SUMMARY RISK DATA																	
	FY 12	FY 13	FY 14	FY 15	FY 16	FY 17	FY 18	FY 19	FY 20	FY 21	FY 22	FY 23	FY 24	FY 25	FY 26	FY 27	FY 28
Industrial Injury Risk (injuries)																	
Retrieval	0	0	0	0	0	0	0	0	0	0	0	0	0	0	0	0	0
Pretreatment(1)	0	0	0	0	0	0	0	0	0	0	0	0	0	0	0	0	0
LLW Melter	2.1015	2.08843	0.82633	0.0237	0.0195	0.00665	0	0	0	0	0	0	0	0	0	0	0
HLW Melter	0	0	0	0	0	0	0	0	0	0	0	0	0	0	0	0	0
Totals	2.1015	2.08843	0.82633	0.0237	0.0195	0.00665	0	0	0	0	0	0	0	0	0	0	0
Industrial Death Risk (fatalities)																	
Retrieval	0	0	0	0	0	0	0	0	0	0	0	0	0	0	0	0	0
Pretreatment(1)	0	0	0	0	0	0	0	0	0	0	0	0	0	0	0	0	0
LLW Melter	0.00227	0.00226	0.00089	2.6E-05	2.1E-05	7.2E-06	0	0	0	0	0	0	0	0	0	0	0
HLW Melter	0	0	0	0	0	0	0	0	0	0	0	0	0	0	0	0	0
Totals	0.00227	0.00226	0.00089	2.6E-05	0	7.2E-06	0	0	0	0	0	0	0	0	0	0	0
Transportation Risk (injuries)																	
Retrieval	0	0	0	0	0	0	0	0	0	0	0	0	0	0	0	0	0
Pretreatment(1)	0	0	0	0	0	0	0	0	0	0	0	0	0	0	0	0	0
LLW Melter	0.00948	0.00942	0.00373	0.00011	8.8E-05	3E-05	0	0	0	0	0	0	0	0	0	0	0
HLW Melter	0	0	0	0	0	0	0	0	0	0	0	0	0	0	0	0	0
Totals	0.00948	0.00942	0.00373	0.00011	8.8E-05	3E-05	0	0	0	0	0	0	0	0	8.8E-05	0	0
Transportation Risk (fatalities)																	
Retrieval	0	0	0	0	0	0	0	0	0	0	0	0	0	0	0	0	0
Pretreatment(1)	0	0	0	0	0	0	0	0	0	0	0	0	0	0	0	0	0
LLW Melter	0.00463	0.00461	0.00182	5.2E-05	4.3E-05	1.5E-05	0	0	0	0	0	0	0	0	0	0	0
HLW Melter	0	0	0	0	0	0	0	0	0	0	0	0	0	0	0	0	0
Totals	0.00463	0.00461	0.00182	5.2E-05	0	1.5E-05	0	0	0	0	0	0	0	0	0	0	0
Radiation Exposure Risk (fatal cancers)																	
Retrieval	0	0	0	0	0	0	0	0	0	0	0	0	0	0	0	0	0
Pretreatment(1)	0	0	0	0	0	0	0	0	0	0	0	0	0	0	0	0	0
LLW Melter	0.00106	0.00105	0.00042	1.2E-05	9.8E-06	3.3E-06	0	0	0	0	0	0	0	0	0	0	0
HLW Melter	0	0	0	0	0	0	0	0	0	0	0	0	0	0	0	0	0
Totals	0.00106	0.00105	0.00042	1.2E-05	0	3.3E-06	0	0	0	0	0	0	0	0	0	0	0

ALTERNATIVE 1													
SUMMARY RISK DATA													
	FY 29	FY 30	FY 31	FY 32	FY 33	FY 34	FY 35	FY 36	FY 37	FY 38	FY 39	FY 40	Totals
Industrial Injury Risk (injuries)													
Retrieval	0	0	0	0	0	0	0	0	0	0	0	0	60.7168
Pretreatment(1)	0	0	0	0	0	0	0	0	0	0	0	0	148.374
LLW Melter	0	0	0	0	0	0	0	0	0	0	0	0	187.944
HLW Melter	0	0	0	0	0	0	0	0	0	0	0	0	201.531
Totals	0	0	0	0	0	0	0	0	0	0	0	0	598.566
Industrial Death Risk (fatalities)													
Retrieval	0	0	0	0	0	0	0	0	0	0	0	0	0.13521
Pretreatment(1)	0	0	0	0	0	0	0	0	0	0	0	0	0.27922
LLW Melter	0	0	0	0	0	0	0	0	0	0	0	0	0.39151
HLW Melter	0	0	0	0	0	0	0	0	0	0	0	0	0.40512
Totals	0	0	0	0	0	0	0	0	0	0	0	0	1.21105
Transportation Risk (injuries)													
Retrieval	0	0	0	0	0	0	0	0	0	0	0	0	0.27075
Pretreatment(1)	0	0	0	0	0	0	0	0	0	0	0	0	0.59703
LLW Melter	0	0	0	0	0	0	0	0	0	0	0	0	0.70906
HLW Melter	0	0	0	0	0	0	0	0	0	0	0	0	0.75594
Totals	0	0	0	0	0	0	0	0	0	0	0	0	2.33278
Transportation Risk (fatalities)													
Retrieval	0	0	0	0	0	0	0	0	0	0	0	0	0.13232
Pretreatment(1)	0	0	0	0	0	0	0	0	0	0	0	0	0.29177
LLW Melter	0	0	0	0	0	0	0	0	0	0	0	0	0.34653
HLW Melter	0	0	0	0	0	0	0	0	0	0	0	0	0.36944
Totals	0	0	0	0	0	0	0	0	0	0	0	0	1.14005
Radiation Exposure Risk (fatal cancers)													
Retrieval	0	0	0	0	0	0	0	0	0	0	0	0	0.02928
Pretreatment(1)	0	0	0	0	0	0	0	0	0	0	0	0	0.08085
LLW Melter	0	0	0	0	0	0	0	0	0	0	0	0	0.0576
HLW Melter	0	0	0	0	0	0	0	0	0	0	0	0	0.13466
Totals	0	0	0	0	0	0	0	0	0	0	0	0	0.30239

ALTERNATIVE 2																	
SUMMARY RISK DATA																	
	FY 95	FY 96	FY 97	FY 98	FY 99	FY 00	FY 01	FY 02	FY 03	FY 04	FY 05	FY 06	FY 07	FY 08	FY 09	FY 10	FY 11
Industrial Injury Risk (injuries)																	
Retrieval	8.22625	10.7916	9.97627	5.41981	10.7916	0.73361	0.97915	2.01822	4.26258	1.00616	0.97877	0.65251	0.77486	0.77486	0.69329	0.69329	0
Pretreatment(1)	9.42141	8.68832	9.36874	13.4165	8.68832	7.22878	9.71415	16.8192	17.4886	20.5852	29.7795	14.4552	8.83132	7.83898	6.41296	6.41296	0
LLW Melter	6.64232	3.80759	3.581	3.86501	3.80759	3.56928	4.3217	5.52898	12.2966	12.3606	20.856	3.29365	3.50776	3.49679	2.13004	2.11885	2.10482
HLW Melter	3.12811	3.89292	3.91713	1.06969	3.89292	3.17193	7.17635	21.5845	28.6847	23.6934	22.4385	15.8065	21.8065	25.8718	10.4112	53.0943	0
Totals	27.4181	27.1804	26.8432	23.771	27.1804	14.7036	22.1914	45.9509	62.7325	57.6454	74.0528	34.2079	34.9205	37.9824	19.6475	62.3194	2.10482
Industrial Death Risk (fatalities)																	
Retrieval	0.0181	0.02167	0.02329	0.01497	0.02167	0.00174	0.00307	0.0059	0.00958	0.00109	0.00106	0.0007	0.00084	0.00084	0.00075	0.00075	0
Pretreatment(1)	0.02135	0.01968	0.0211	0.02263	0.01968	0.01137	0.02054	0.05207	0.0504	0.05544	0.05924	0.01586	0.00959	0.00848	0.00692	0.00692	0
LLW Melter	0.01264	0.00725	0.00658	0.0071	0.00725	0.0055	0.00795	0.01237	0.02178	0.01335	0.02252	0.00356	0.00379	0.00378	0.0023	0.00229	0.00227
HLW Melter	0.00594	0.00739	0.00717	0.00185	0.00739	0.00566	0.02116	0.07107	0.09445	0.06889	0.04685	0.01707	0.02355	0.02794	0.01124	0.05733	0
Totals	0.05803	0.05598	0.05814	0.04654	0.05598	0.02428	0.05272	0.14141	0.17622	0.13877	0.12967	0.03719	0.03776	0.04103	0.02122	0.06729	0.00227
Transportation Risk (injuries)																	
Retrieval	0.04006	0.05551	0.04511	0.02005	0.05551	0.00317	0.00259	0.00592	0.01512	0.0046	0.00445	0.00297	0.00352	0.00352	0.00315	0.00315	0
Pretreatment(1)	0.03655	0.03374	0.03713	0.05867	0.03374	0.03801	0.04015	0.04166	0.04985	0.06283	0.11095	0.06628	0.04028	0.0357	0.02917	0.02917	0
LLW Melter	0.03257	0.01869	0.01703	0.01843	0.01869	0.01765	0.01644	0.01898	0.04756	0.05584	0.09418	0.0149	0.01588	0.01583	0.00961	0.00956	0.0095
HLW Melter	0.01565	0.01938	0.01964	0.0067	0.01938	0.02127	0.02459	0.05204	0.07022	0.06666	0.08047	0.07164	0.09877	0.11712	0.04731	0.23993	0
Totals	0.12483	0.12733	0.11892	0.10386	0.12733	0.0801	0.08377	0.12241	0.18275	0.18993	0.29005	0.15579	0.15845	0.17217	0.08924	0.28181	0.0095
Transportation Risk (fatalities)																	
Retrieval	0.01958	0.02713	0.02205	0.0098	0.02713	0.00155	0.00127	0.0029	0.00739	0.00225	0.00218	0.00145	0.00172	0.00172	0.00154	0.00154	0
Pretreatment(1)	0.01786	0.01649	0.01814	0.02867	0.01649	0.01858	0.01962	0.02182	0.02436	0.03071	0.05422	0.03239	0.01968	0.01745	0.01426	0.01426	0
LLW Melter	0.01592	0.00913	0.00832	0.00901	0.00913	0.00863	0.00803	0.00928	0.02324	0.02729	0.04603	0.00728	0.00776	0.00774	0.0047	0.00467	0.00464
HLW Melter	0.00765	0.00947	0.0096	0.00328	0.00947	0.01039	0.01202	0.02592	0.03432	0.03258	0.03933	0.03501	0.04827	0.05724	0.02312	0.11725	0
Totals	0.06101	0.06223	0.05812	0.05076	0.06223	0.03915	0.04094	0.08182	0.08931	0.09282	0.14175	0.07614	0.07744	0.08414	0.04361	0.13772	0.00464
Radiation Exposure Risk (fatal cancers)																	
Retrieval	0.00454	0.0068	0.00513	0.00196	0.00056	0.00037	0.00027	0.00173	0.00291	0.00125	0.00122	0.00081	0.00097	0.00097	0.00086	0.00086	0
Pretreatment(1)	0.00381	0.00351	0.00378	0.00781	0.00498	0.00401	0.00428	0.00317	0.00444	0.00636	0.01548	0.01138	0.00702	0.00624	0.00512	0.00512	0
LLW Melter	0.00154	0.00088	0.00089	0.00096	0.00105	0.00106	0.00123	0.00124	0.00363	0.00493	0.00832	0.00131	0.0014	0.0014	0.00085	0.00085	0.00084
HLW Melter	0.00208	0.00259	0.00274	0.00065	0.00165	0.00165	0.0019	0.00411	0.00546	0.00851	0.01611	0.01833	0.02528	0.03	0.01207	0.06156	0
Totals	0.01197	0.01378	0.01254	0.01137	0.00824	0.00708	0.00768	0.00826	0.01644	0.02105	0.04113	0.03184	0.03467	0.0386	0.0189	0.06839	0.00084

ALTERNATIVE 2																	
SUMMARY RISK DATA																	
	FY 12	FY 13	FY 14	FY 15	FY 16	FY 17	FY 18	FY 19	FY 20	FY 21	FY 22	FY 23	FY 24	FY 25	FY 26	FY 27	FY 28
Industrial Injury Risk (injuries)																	
Retrieval	0	0	0	0	0	0	0	0	0	0	0	0	0	0	0	0	0
Pretreatment(1)	0	0	0	0	0	0	0	0	0	0	0	0	0	0	0	0	0
LLW Melter	2.08069	2.06775	0.81815	0.02347	0.0193	0.00601	0	0	0	0	0	0	0	0	0	0	0
HLW Melter	0	0	0	0	0	0	0	0	0	0	0	0	0	0	0	0	0
Totals	2.08069	2.06775	0.81815	0.02347	0.0193	0.00601	0	0	0	0	0	0	0	0	0	0	0
Industrial Death Risk (fatalities)																	
Retrieval	0	0	0	0	0	0	0	0	0	0	0	0	0	0	0	0	0
Pretreatment(1)	0	0	0	0	0	0	0	0	0	0	0	0	0	0	0	0	0
LLW Melter	0.00225	0.00223	0.00088	2.5E-05	2.1E-05	8.4E-06	0	0	0	0	0	0	0	0	0	0	0
HLW Melter	0	0	0	0	0	0	0	0	0	0	0	0	0	0	0	0	0
Totals	0.00225	0.00223	0.00088	2.5E-05	0	8.4E-06	0	0	0	0	0	0	0	0	0	0	0
Transportation Risk (injuries)																	
Retrieval	0	0	0	0	0	0	0	0	0	0	0	0	0	0	0	0	0
Pretreatment(1)	0	0	0	0	0	0	0	0	0	0	0	0	0	0	0	0	0
LLW Melter	0.00939	0.00933	0.00369	0.00011	8.7E-05	3.4E-05	0	0	0	0	0	0	0	0	0	0	0
HLW Melter	0	0	0	0	0	0	0	0	0	0	0	0	0	0	0	0	0
Totals	0.00939	0.00933	0.00369	0.00011	8.7E-05	3.4E-05	0	0	0	0	0	0	0	0	8.7E-05	0	0
Transportation Risk (fatalities)																	
Retrieval	0	0	0	0	0	0	0	0	0	0	0	0	0	0	0	0	0
Pretreatment(1)	0	0	0	0	0	0	0	0	0	0	0	0	0	0	0	0	0
LLW Melter	0.00459	0.00456	0.0018	5.2E-05	4.3E-05	1.6E-05	0	0	0	0	0	0	0	0	0	0	0
HLW Melter	0	0	0	0	0	0	0	0	0	0	0	0	0	0	0	0	0
Totals	0.00459	0.00456	0.0018	5.2E-05	0	1.6E-05	0	0	0	0	0	0	0	0	0	0	0
Radiation Exposure Risk (fatal cancers)																	
Retrieval	0	0	0	0	0	0	0	0	0	0	0	0	0	0	0	0	0
Pretreatment(1)	0	0	0	0	0	0	0	0	0	0	0	0	0	0	0	0	0
LLW Melter	0.00083	0.00083	0.00033	9.4E-06	7.7E-06	1.8E-06	0	0	0	0	0	0	0	0	0	0	0
HLW Melter	0	0	0	0	0	0	0	0	0	0	0	0	0	0	0	0	0
Totals	0.00083	0.00083	0.00033	9.4E-06	0	1.8E-06	0	0	0	0	0	0	0	0	0	0	0

ALTERNATIVE 2
SUMMARY RISK DATA

	FY 29	FY 30	FY 31	FY 32	FY 33	FY 34	FY 35	FY 36	FY 37	FY 38	FY 39	FY 40	Totals
Industrial Injury Risk (injuries)													
Retrieval	0	0	0	0	0	0	0	0	0	0	0	0	58.7728
Pretreatment(1)	0	0	0	0	0	0	0	0	0	0	0	0	195.15
LLW Melter	0	0	0	0	0	0	0	0	0	0	0	0	102.304
HLW Melter	0	0	0	0	0	0	0	0	0	0	0	0	249.641
Totals	0	0	0	0	0	0	0	0	0	0	0	0	605.867
Industrial Death Risk (fatalities)													
Retrieval	0	0	0	0	0	0	0	0	0	0	0	0	0.12601
Pretreatment(1)	0	0	0	0	0	0	0	0	0	0	0	0	0.40128
LLW Melter	0	0	0	0	0	0	0	0	0	0	0	0	0.14768
HLW Melter	0	0	0	0	0	0	0	0	0	0	0	0	0.47495
Totals	0	0	0	0	0	0	0	0	0	0	0	0	1.14992
Transportation Risk (injuries)													
Retrieval	0	0	0	0	0	0	0	0	0	0	0	0	0.26844
Pretreatment(1)	0	0	0	0	0	0	0	0	0	0	0	0	0.74687
LLW Melter	0	0	0	0	0	0	0	0	0	0	0	0	0.45399
HLW Melter	0	0	0	0	0	0	0	0	0	0	0	0	0.97157
Totals	0	0	0	0	0	0	0	0	0	0	0	0	2.44087
Transportation Risk (fatalities)													
Retrieval	0	0	0	0	0	0	0	0	0	0	0	0	0.13119
Pretreatment(1)	0	0	0	0	0	0	0	0	0	0	0	0	0.365
LLW Melter	0	0	0	0	0	0	0	0	0	0	0	0	0.22187
HLW Melter	0	0	0	0	0	0	0	0	0	0	0	0	0.47482
Totals	0	0	0	0	0	0	0	0	0	0	0	0	1.19288
Radiation Exposure Risk (fatal cancers)													
Retrieval	0	0	0	0	0	0	0	0	0	0	0	0	0.03021
Pretreatment(1)	0	0	0	0	0	0	0	0	0	0	0	0	0.0965
LLW Melter	0	0	0	0	0	0	0	0	0	0	0	0	0.03438
HLW Melter	0	0	0	0	0	0	0	0	0	0	0	0	0.19468
Totals	0	0	0	0	0	0	0	0	0	0	0	0	0.35577

ALTERNATIVE 3																	
SUMMARY RISK DATA																	
	FY 95	FY 96	FY 97	FY 98	FY 99	FY 00	FY 01	FY 02	FY 03	FY 04	FY 05	FY 06	FY 07	FY 08	FY 09	FY 10	FY 11
Industrial Injury Risk (injuries)																	
Retrieval	8.25329	10.8592	10.098	5.59754	10.8592	1.00022	3.08774	3.27902	5.7625	0.63096	0.48938	0.48938	0.48938	0.48938	0	0	0
Pretreatment(1)	9.53972	9.03515	9.93733	16.7291	9.03515	8.72449	13.5054	2.99382	2.83421	3.51081	13.4328	8.66417	1.90858	0.91624	0	0	0
LLW Melter	6.67444	3.89548	3.73312	4.08559	3.89548	3.8454	6.90309	6.64305	13.5356	11.5205	19.8161	2.82466	2.82466	2.81369	2.13004	2.11885	2.10482
HLW Melter	3.16618	4.11307	4.12041	1.25338	4.11307	2.13663	12.4389	28.5973	36.2802	4.97888	8.11616	12.1947	16.6619	20.7878	1.37353	44.6937	0
Totals	27.6336	27.9029	27.8888	27.6656	27.9029	15.7067	35.9352	41.5132	58.4125	20.6412	41.8544	24.1729	21.8846	25.0071	3.50357	46.8125	2.10482
Industrial Death Risk (fatalities)																	
Retrieval	0.01815	0.02179	0.02351	0.01528	0.02179	0.00222	0.01001	0.01005	0.01452	0.00069	0.00053	0.00053	0.00053	0.00053	0	0	0
Pretreatment(1)	0.02156	0.0203	0.02212	0.03377	0.0203	0.01183	0.02299	0.00655	0.00721	0.00399	0.01489	0.0096	0.00211	0.00101	0	0	0
LLW Melter	0.0127	0.0074	0.00685	0.00749	0.0074	0.006	0.01645	0.01604	0.02586	0.01244	0.0214	0.00305	0.00305	0.00304	0.0023	0.00229	0.00227
HLW Melter	0.00601	0.00779	0.00754	0.00217	0.00779	0.00382	0.04096	0.09416	0.11946	0.00538	0.00876	0.01317	0.01799	0.02245	0.00148	0.04826	0
Totals	0.05842	0.05728	0.06001	0.05872	0.05728	0.02386	0.09041	0.1268	0.16705	0.02249	0.04558	0.02635	0.02368	0.02702	0.00378	0.05055	0.00227
Transportation Risk (injuries)																	
Retrieval	0.04025	0.05598	0.04596	0.02124	0.05598	0.00495	0.00776	0.00901	0.01879	0.00289	0.00223	0.00223	0.00223	0.00223	0	0	0
Pretreatment(1)	0.03737	0.03609	0.04095	0.0661	0.03609	0.04127	0.05564	0.01081	0.00917	0.0165	0.06193	0.03994	0.00879	0.00421	0	0	0
LLW Melter	0.03279	0.0193	0.01809	0.0199	0.0193	0.01949	0.02276	0.02171	0.05059	0.05201	0.08945	0.01277	0.01277	0.01272	0.00961	0.00956	0.0095
HLW Melter	0.01582	0.0208	0.02094	0.0079	0.0208	0.01426	0.03045	0.07001	0.08882	0.02264	0.0368	0.0552	0.07536	0.09398	0.0062	0.20169	0
Totals	0.12624	0.13217	0.12594	0.11515	0.13217	0.07998	0.11661	0.11154	0.16737	0.09405	0.19041	0.11014	0.09915	0.11314	0.01581	0.21125	0.0095
Transportation Risk (fatalities)																	
Retrieval	0.01967	0.02736	0.02246	0.01038	0.02736	0.00242	0.00379	0.0044	0.00918	0.00141	0.00109	0.00109	0.00109	0.00109	0	0	0
Pretreatment(1)	0.01827	0.01764	0.02001	0.03231	0.01764	0.02017	0.02719	0.00528	0.00448	0.00807	0.03027	0.01952	0.00429	0.00206	0	0	0
LLW Melter	0.01603	0.00943	0.00884	0.00973	0.00943	0.00953	0.01112	0.01061	0.02473	0.02542	0.04371	0.00624	0.00624	0.00622	0.0047	0.00467	0.00464
HLW Melter	0.00773	0.01016	0.01023	0.00386	0.01016	0.00697	0.01488	0.03422	0.04341	0.01106	0.01798	0.02698	0.03683	0.04593	0.00303	0.09857	0
Totals	0.06169	0.06459	0.06155	0.05627	0.06459	0.03909	0.05699	0.05451	0.0818	0.04596	0.09305	0.05383	0.04845	0.05529	0.00773	0.10324	0.00464
Radiation Exposure Risk (fatal cancers)																	
Retrieval	0.00456	0.00684	0.00519	0.00206	0.0007	0.00052	0.0007	0.00099	0.00321	0.00078	0.00061	0.00061	0.00061	0.00061	0	0	0
Pretreatment(1)	0.00385	0.00364	0.00398	0.00821	0.00547	0.00592	0.00807	0.00136	0.00099	0.00268	0.01048	0.00676	0.00149	0.00072	0	0	0
LLW Melter	0.00154	0.0009	0.00092	0.001	0.0011	0.00111	0.0014	0.00132	0.00371	0.0046	0.00791	0.00113	0.00113	0.00112	0.00085	0.00085	0.00084
HLW Melter	0.00193	0.00249	0.00262	0.00068	0.00102	0.00102	0.00217	0.00499	0.00633	0.00529	0.00862	0.01295	0.0177	0.02208	0.00146	0.04747	0
Totals	0.01188	0.01386	0.01271	0.01195	0.00829	0.00857	0.01234	0.00865	0.01424	0.01335	0.02762	0.02145	0.02093	0.02453	0.00231	0.04832	0.00084

ALTERNATIVE 3
SUMMARY RISK DATA

	FY 12	FY 13	FY 14	FY 15	FY 16	FY 17	FY 18	FY 19	FY 20	FY 21	FY 22	FY 23	FY 24	FY 25	FY 26	FY 27	FY 28
Industrial Injury Risk (injuries)																	
Retrieval	0	0	0	0	0	0	0	0	0	0	0	0	0	0	0	0	0
Pretreatment(1)	0	0	0	0	0	0	0	0	0	0	0	0	0	0	0	0	0
LLW Melter	2.08069	2.06775	0.81815	0.02347	0.0193	0.00658	0	0	0	0	0	0	0	0	0	0	0
HLW Melter	0	0	0	0	0	0	0	0	0	0	0	0	0	0	0	0	0
Totals	2.08069	2.06775	0.81815	0.02347	0.0193	0.00658	0	0	0	0	0	0	0	0	0	0	0
Industrial Death Risk (fatalities)																	
Retrieval	0	0	0	0	0	0	0	0	0	0	0	0	0	0	0	0	0
Pretreatment(1)	0	0	0	0	0	0	0	0	0	0	0	0	0	0	0	0	0
LLW Melter	0.00225	0.00223	0.00088	2.5E-05	2.1E-05	7.1E-06	0	0	0	0	0	0	0	0	0	0	0
HLW Melter	0	0	0	0	0	0	0	0	0	0	0	0	0	0	0	0	0
Totals	0.00225	0.00223	0.00088	2.5E-05	0	7.1E-06	0	0	0	0	0	0	0	0	0	0	0
Transportation Risk (injuries)																	
Retrieval	0	0	0	0	0	0	0	0	0	0	0	0	0	0	0	0	0
Pretreatment(1)	0	0	0	0	0	0	0	0	0	0	0	0	0	0	0	0	0
LLW Melter	0.00939	0.00933	0.00369	0.00011	8.7E-05	3E-05	0	0	0	0	0	0	0	0	0	0	0
HLW Melter	0	0	0	0	0	0	0	0	0	0	0	0	0	0	0	0	0
Totals	0.00939	0.00933	0.00369	0.00011	8.7E-05	3E-05	0	0	0	0	0	0	0	0	8.7E-05	0	0
Transportation Risk (fatalities)																	
Retrieval	0	0	0	0	0	0	0	0	0	0	0	0	0	0	0	0	0
Pretreatment(1)	0	0	0	0	0	0	0	0	0	0	0	0	0	0	0	0	0
LLW Melter	0.00459	0.00456	0.0018	5.2E-05	4.3E-05	1.5E-05	0	0	0	0	0	0	0	0	0	0	0
HLW Melter	0	0	0	0	0	0	0	0	0	0	0	0	0	0	0	0	0
Totals	0.00459	0.00456	0.0018	5.2E-05	0	1.5E-05	0	0	0	0	0	0	0	0	0	0	0
Radiation Exposure Risk (fatal cancers)																	
Retrieval	0	0	0	0	0	0	0	0	0	0	0	0	0	0	0	0	0
Pretreatment(1)	0	0	0	0	0	0	0	0	0	0	0	0	0	0	0	0	0
LLW Melter	0.00083	0.00083	0.00033	9.4E-06	7.7E-06	2.6E-06	0	0	0	0	0	0	0	0	0	0	0
HLW Melter	0	0	0	0	0	0	0	0	0	0	0	0	0	0	0	0	0
Totals	0.00083	0.00083	0.00033	9.4E-06	0	2.6E-06	0	0	0	0	0	0	0	0	0	0	0

ALTERNATIVE 3													
SUMMARY RISK DATA													
	FY 29	FY 30	FY 31	FY 32	FY 33	FY 34	FY 35	FY 36	FY 37	FY 38	FY 39	FY 40	Totals
Industrial Injury Risk (injuries)													
Retrieval	0	0	0	0	0	0	0	0	0	0	0	0	61.3851
Pretreatment(1)	0	0	0	0	0	0	0	0	0	0	0	0	110.767
LLW Melter	0	0	0	0	0	0	0	0	0	0	0	0	104.381
HLW Melter	0	0	0	0	0	0	0	0	0	0	0	0	205.026
Totals	0	0	0	0	0	0	0	0	0	0	0	0	481.558
Industrial Death Risk (fatalities)													
Retrieval	0	0	0	0	0	0	0	0	0	0	0	0	0.14012
Pretreatment(1)	0	0	0	0	0	0	0	0	0	0	0	0	0.19822
LLW Melter	0	0	0	0	0	0	0	0	0	0	0	0	0.16144
HLW Melter	0	0	0	0	0	0	0	0	0	0	0	0	0.40719
Totals	0	0	0	0	0	0	0	0	0	0	0	0	0.90697
Transportation Risk (injuries)													
Retrieval	0	0	0	0	0	0	0	0	0	0	0	0	0.27172
Pretreatment(1)	0	0	0	0	0	0	0	0	0	0	0	0	0.46487
LLW Melter	0	0	0	0	0	0	0	0	0	0	0	0	0.45498
HLW Melter	0	0	0	0	0	0	0	0	0	0	0	0	0.78168
Totals	0	0	0	0	0	0	0	0	0	0	0	0	1.97325
Transportation Risk (fatalities)													
Retrieval	0	0	0	0	0	0	0	0	0	0	0	0	0.13279
Pretreatment(1)	0	0	0	0	0	0	0	0	0	0	0	0	0.22719
LLW Melter	0	0	0	0	0	0	0	0	0	0	0	0	0.22235
HLW Melter	0	0	0	0	0	0	0	0	0	0	0	0	0.38202
Totals	0	0	0	0	0	0	0	0	0	0	0	0	0.96435
Radiation Exposure Risk (fatal cancers)													
Retrieval	0	0	0	0	0	0	0	0	0	0	0	0	0.028
Pretreatment(1)	0	0	0	0	0	0	0	0	0	0	0	0	0.06361
LLW Melter	0	0	0	0	0	0	0	0	0	0	0	0	0.0334
HLW Melter	0	0	0	0	0	0	0	0	0	0	0	0	0.13881
Totals	0	0	0	0	0	0	0	0	0	0	0	0	0.26383

This page intentionally left blank.

APPENDIX E

ADJUSTED BASELINE ALTERNATIVE

This page intentionally left blank.

The impact of increasing the equipment replacement times assumed for sludge washing and solids/liquid separation are presented in this appendix.

Both of these processes are planned to be performed in the current double-shell tanks. The body of the report, as shown in the second and third assumptions identified in Section 5.3.1, assumed that the pretreatment facility design would accomodate in-facility sludge washing and solids/liquid separation should the tank-based processes fail to perform. On this basis, the report assumed that equipment replacement for either of these processes would require only two years. If these assumptions are not correct, than a major modification of the pretreatment facility would be required. This would require the full design/construct/permitting cycle which is estimated to take eight years based on the current pretreatment facility schedule.

The impact of changing these assumptions was minimal. The overall schedule delay increased from 1.39 years to 1.40 years of schedule extension risk. The primary reason for this small impact was that the assumed probability of a technology failure in these areas was assumed to be very small (<0.1%).

Baseline Alternative. Schedule Risk	Estimated Years of Alt 1,2 or 3 Testing to Delayed Design Benefit	Estimated Earliest Date of Alt 1,2, or 3 Hot Pilot Plant Testing Startup	Date of TWRS Title II Design Completion Minus 1 Year	Estimated TWRS Equipment Replacement Time	Replacement probability If No Testing Beyond Alt. 4	Probability that Alt 1,2 or 3 testing will identify risk reducing design change - TPA Schedule	Added Probability Alt 1,2 or 3 testing will reduce Startup/Ops schedule risk - TPA Schedule	Probability That Alt. 1,2 or 3 testing will identify risk reducing design change - Delayed Schedule	Added Probability that Alt 1,2 or 3 testing will reduce Startup/Ops schedule risk - Delayed Sch.	Schedule Extension for Testing to Support Design - TPA Schedule	Schedule Extension for Testing to Support Design & Operations - TPA Schedule	Schedule Extension for Testing to Support Design - Delayed Schedule	Schedule Extension for Testing to Support Design & Operations - Delayed Schedule
	S1	S2	S3	S4	S5	S6	S7	S8	S9	S10	S11	S12	S13
Retrieval													
Sluice				4 yrs	0.2					8.0E-1 yrs	7.2E-1 yrs		
Pretreatment													
Sludge Washing				8 yrs	0.001					8.0E-3 yrs	8.0E-3 yrs		
Solids/Liquid Separation													
In-Tank Settle				8 yrs	0.001					8.0E-3 yrs	8.0E-3 yrs		
Filtration				1 yrs	0.1					1.0E-1 yrs	1.0E-1 yrs		
Cs IX													
Feed Evap.				3 yrs	0					0 yrs	0 yrs		
IX				0.5 yrs	0.001					5.0E-4 yrs	5.0E-4 yrs		
Eluant Conc.				3 yrs	0					0 yrs	0 yrs		
FUNCTION SUBTOTAL										0.12 yrs	0.12 yrs		
LLW VITRIFICATION													
Evap.				3 yrs	0					0 yrs	0 yrs		
Melter				2 yrs	0.1					2.0E-1 yrs	2.0E-1 yrs		
Quencher				1 yrs	0.01					1.0E-2 yrs	1.0E-2 yrs		
Cul Drying				1 yrs	0.001					1.0E-3 yrs	1.0E-3 yrs		
Cyclone				1 yrs	0.001					1.0E-3 yrs	1.0E-3 yrs		
NOx/SO2				2 yrs	0.01					2.0E-2 yrs	2.0E-2 yrs		
Claus React.				2 yrs	0.01					2.0E-2 yrs	2.0E-2 yrs		
FUNCTION SUBTOTAL										0.25 yrs	0.25 yrs		
HLW VITRIFICATION													
Centrifuge				1 yrs	0.01					1.0E-2 yrs	1.0E-2 yrs		
Evap.				3 yrs	0					0 yrs	0 yrs		
Melter				2 yrs	0.1					2.0E-1 yrs	2.0E-1 yrs		
Quench				1 yrs	0.01					1.0E-2 yrs	1.0E-2 yrs		
Vent Scrub				1 yrs	0.01					1.0E-2 yrs	1.0E-2 yrs		
Demist				1 yrs	0.001					1.0E-3 yrs	1.0E-3 yrs		
FUNCTION SUBTOTAL										0.23 yrs	0.23 yrs		
TOTAL										1.40 yrs	1.32 yrs		
TOTAL WITH DELAYS										1.40 yrs	1.32 yrs		