2

RECEIVED
OCT 03 1994
OSTI

ENGINEERING STUDY

INSTALLATION OF NEW RISERS IN SINGLE-SHELL TANKS

WORK ORDER ER5511

Prepared for

Westinghouse Hanford Company

August 1994

For the U.S. Department of Energy
Contract DE-AC06-93RL12359

Prepared by

ICF Kaiser Hanford Company
Richland, Washington

ER5511ES

MASTER

ICF Kaiser Hanford Company

DISTRIBUTION OF THIS DOCUMENT IS UNLIMITED

DISCLAIMER

This report was prepared as an account of work sponsored by an agency of the United States Government. Neither the United States Government nor any agency thereof, nor any of their employees, make any warranty, express or implied, or assumes any legal liability or responsibility for the accuracy, completeness, or usefulness of any information, apparatus, product, or process disclosed, or represents that its use would not infringe privately owned rights. Reference herein to any specific commercial product, process, or service by trade name, trademark, manufacturer, or otherwise does not necessarily constitute or imply its endorsement, recommendation, or favoring by the United States Government or any agency thereof. The views and opinions of authors expressed herein do not necessarily state or reflect those of the United States Government or any agency thereof.

DISCLAIMER

Portions of this document may be illegible in electronic image products. Images are produced from the best available original document.

DISTRIBUTION SHEET

To	From	Page 1 of 2
Distribution	C. H. Brevick G7-56	Date August 19, 1994
Project Title/Work Order		EDT No.
Engineering Study - Installation of New Risers In Single-Shell Tanks / ER5511		ECN No.

Name	MSIN	Text With All Attach.	Text Only	Attach./ Appendix Only	EDT/ECN Only
	Westinghouse Hanford Company				
H. Babad	S7-30	X			
D. R. Bratzel	S7-31	X			
C. Defigh-Price	S7-30	X (5)			
C. W. Dunbar	R1-30	X			
S. J. Eberlein	S7-31	X			
G. D. Forehand	S7-31	X			
G. T. Frater	S7-30	X			
T. L. Moore	H5-09	X			
R. S. Popielarczyk	R1-30	X			
J. G. Propson	S4-58	X			
R. E. Raymond	R2-54	X			
G. A. Stanton	S7-31	X			
F. R. Vollert	H5-09	X			
W. F. Zuroff	S7-12	X			
TFIC (Tank Farm Information Center)	R1-20	X			
Central Files	L8-04	X (2)			
OSTI	R1-05	X (2)			
ICF-Kaiser Hanford Company					
C. H. Brevick	G7-56	X (5)			
S. D. Consort	E6-46	X			
J. B. Geiger	S2-50	X			
L. E. Hall	E6-25	X			
M. W. Hoffmann	S2-54	X			
J. R. Holladay	S2-50	X			
R. B. Johnson	G7-56	X			
W. J. Magruder	S3-80	X			
R. I. Watkins	E6-41	X			
ICF-KH Publications	E6-63	0			X
ICF-KH Doc Control	G3-11	X			
Pacific Northwest Laboratory					
P. J. Mellinger	P7-22	X			
P. G. Eller	B1-40	X			

BHI

C. C. Busacker	E6-41	X

Department of Energy - Richland Operations

J. M. Clark	S7-54	X
R. E. Gerton	S7-54	X
J. P. Haney	S7-73	X
A. B. Sidpara	S7-54	X

OFFSITE

Tank Advisory Panel

D. O. Campbell X
102 Windham Road
Oak Ridge, TN 37830

Tank Characterization Advisory Panel

J. Arvizu X
Sr Technical Consultant
Contech
6301 Indian School Rd NE, Ste 614
Albuquerque, NM 87110

Department of Energy - Headquarters

K. T. Lang X
U. S. Department of Energy
Office of Environmental Restoration
and Waste Management (EM-563)
12800 Middlebrook Road
Germantown, MD 20874

H. Sutter X
SAIC
2030 Centry Blvd.
Suite 200B
Germantown, MD 20874

AUG 23 1994

ENGINEERING DATA TRANSMITTAL

Page 1 of 1

1. EDT 136993

2. To: (Receiving Organization) TWRS	3. From: (Originating Organization) ICF KH	4. Related EDT No.:
		7. Purchase Order No.:
5. Proj./Prog./Dept./Div.: ER5511	6. Cog. Engr.: W.J. Magruder	9. Equip./Component No.: N/A
8. Originator Remarks: Engineering Study for Installation of New Risers in SST's. For original release.		10. System/Bldg./Facility: Tank Farms
		12. Major Assm. Dwg. No.: N/A
11. Receiver Remarks:		13. Permit/Permit Application No.: N/A
		14. Required Response Date: N/A

15. DATA TRANSMITTED

(A) Item No.	(B) Document/Drawing No.	(C) Sheet No.	(D) Rev. No.	(E) Title or Description of Data Transmitted	(F) Impact Level	(G) Reason for Transmittal	(H) Originator Disposition	(I) Receiver Disposition
1	WHC-SD-WM-ES-299		0	Engineering Study - Installation of New Risers in Single- Shell Tanks.	N/A	1	1	1

16. KEY

Impact Level (F)	Reason for Transmittal (G)	Disposition (H) & (I)
1, 2, 3, or 4 (see MRP 5.43)	1. Approval 2. Release 3. Information 4. Review 5. Post-Review 6. Dist. (Receipt Acknow. Required)	1. Approved 2. Approved w/comment 3. Disapproved w/comment 4. Reviewed no/comment 5. Reviewed w/comment 6. Receipt acknowledged

17. SIGNATURE/DISTRIBUTION (See Impact Level for required signatures)

(G) Reason	(H) Disp.	(J) Name	(K) Signature	(L) Date	(M) MSIN	(J) Name	(K) Signature	(L) Date	(M) MSIN	(G) Reason	(H) Disp.
1	1	Cog. Eng.	W.J. Magruder	8/18/94	S3-08						
1	1	Cog. Mgr.	C.H. Brevick	8/18/94	G7-56						
		QA									
		Safety									
		Env.									

18.	19.	20.	21. DOE APPROVAL (if required)
W.J. Magruder	C. DeFigh-Price	C.H. Brevick	Ltr No.
W.J. Magruder 8/18/94	8-18-94	8/18/94	☐ Approved
Signature of EDT Originator / Date	Authorized Representative for Receiving Organization / Date	Cognizant Manager / Date	☐ Approved w/comments
			☐ Disapproved w/comments

BD-7400-172 (07/91)

SUPPORTING DOCUMENT

1. Total Pages ~~256~~ 243 CHB

2. Title	3. Number	4. Rev No.
Engineering Study - Installation of New Risers in Single-Shell Tanks	WHC-SD-WM-ES-299	0

5. Key Words

Riser Installation, New Risers, Rotary Drilling, Straddle Crane, Abrasive Water Jet Cutting, Core Drilling.

APPROVED FOR PUBLIC RELEASE

KMB 8/22/94

6. Author

Name: W.J. Magruder

W.J. Magruder 8/18/94
Signature

Organization/Charge Code Tank Farm Technical Support/58250 /ER5511

7. Abstract

This Engineering Study, Installation of New Risers in Single-Shell Tanks, provides five alternatives for installing new risers in SSTs to increase the accesses to the tank interior for sampling and other waste management purposes. Alternatives studied are hand excavate and safely slope overburden, hand excavate with shoring or caisson, using rotary drilling equipment, abrasive water jet cutting for dome penetration and a straddle crane for a portable equipment platform. Among all alternatives studied, based on criteria such as ALARA, availability, cost, safety, schedule and solid waste generation, the rotary drilling is the preferred alternative. This study also provides detailed cost estimates for each alternative, along with environmental requirements and permitting.

8. PURPOSE AND USE OF DOCUMENT - This document was prepared for use within the U.S. Department of Energy and its contractors. It is to be used only to perform, direct, or integrate work under U.S. Department of Energy contracts. This document is not approved for public release until reviewed.

PATENT STATUS - This document copy, since it is transmitted in advance of patent clearance, is made available in confidence solely for use in performance of work under contracts with the U.S. Department of Energy. This document is not to be published nor its contents otherwise disseminated or used for purposes other than specified above before patent approval for such release or use has been secured, upon request, from the Patent Counsel, U.S. Department of Energy Field Office, Richland, WA.

✓ DISCLAIMER - This report was prepared as an account of work sponsored by an agency of the United States Government. Neither the United States Government nor any agency thereof, nor any of their employees, nor any of their contractors, subcontractors or their employees, makes any warranty, express or implied, or assumes any legal liability or responsibility for the accuracy, completeness, or any third party's use or the results of such use of any information, apparatus, product, or process disclosed, or represents that its use would not infringe privately owned rights. Reference herein to any specific commercial product, process, or service by trade name, trademark, manufacturer, or otherwise, does not necessarily constitute or imply its endorsement, recommendation, or favoring by the United States Government or any agency thereof or its contractors or subcontractors. The views and opinions of authors expressed herein do not necessarily state or reflect those of the United States Government or any agency thereof.

9. Impact Level N/A

10. RELEASE STAMP

OFFICIAL RELEASE BY WHC (2)
DATE AUG 23 1994
Sta # 4

RELEASE AUTHORIZATION

Document Number:	WHC-SD-WM-ES-299, REV 0
Document Title:	ENGINEERING STUDY - INSTALLATION OF NEW RISERS IN SINGLE - SHELL TANKS
Release Date:	8/22/94

* * * * * * * * * * * * * *

This document was reviewed following the procedures described in WHC-CM-3-4 and is:

APPROVED FOR PUBLIC RELEASE

* * * * * * * * * * * * * *

WHC Information Release Administration Specialist:

Kara Broz

Kara Broz
(Signature)

8/22/94
(Date)

A-6001-400 (07/94) WEF256

ER5511ES

ENGINEERING STUDY

FOR

INSTALLATION OF NEW RISERS IN SINGLE-SHELL TANKS

WORK ORDER ER5511

Prepared by

ICF Kaiser Hanford Company
Richland, Washington

for

Westinghouse Hanford Company

William J. Magnuder	8/3/94	Judith R. Buchanan	8-11-94
Principal Lead Engineer	Date	Technical Documents	Date
J Schubald	8-5-94	Robert L Newell	8/4/94
Safety Engineering	Date	Environmental Engineering	Date
K C Conrad	8-5-94	Chris H Brevick	8/9/94
Quality Engineering	Date	Project Manager	Date

Westinghouse Hanford Company

C. Dwight Prici	8/10/94
Characterization Program	Date

TABLE OF CONTENTS

I. INTRODUCTION 1

II. SUMMARY AND CONCLUSIONS 1
- A. TANK AND RISER CONFIGURATION 1
- B. GENERIC TANKS 3
- C. RISER SIZE 8
- D. RISER INSTALLATION COSTS 8
- E. PERMITTING COSTS 12
- F. CONCLUSIONS 13

III. DESCRIPTION OF ALTERNATIVES 14
- A. CRITERIA 14
- B. SITE PREPARATION AND CONSTRUCTION SEQUENCE 14
- C. RISER INSTALLATION ALTERNATIVES 19
  - Alternative 1: Hand Excavate Soil Cover and Safely Slope Overburden 19
  - Alternative 2: Hand Excavate with Shoring or Caisson 24
  - Alternative 3: Install Risers with Rotary Drilling Equipment . . . 27
  - Alternative 4: Abrasive Water Jet Cutting for Dome Penetration 31
  - Alternative 5: Straddle Crane 37
- D. RISER INSTALLATION 42
- E. ENVIRONMENTAL REQUIREMENTS AND PERMITTING 46
- F. PERMITS AND NEPA DOCUMENTATION 48
- G. SAFETY REQUIREMENTS 49
- H. SAFEGUARDS AND SECURITY 49
- I. OPERATING PROCEDURE PREPARATION 51

IV. IDENTIFICATION OF PREFERRED ALTERNATIVE 51
- A. EVALUATION OF ALTERNATIVES 51
- B. PREFERRED ALTERNATIVE 53
- C. UNCERTAINTIES 53

V. REFERENCES 54
- A. DOCUMENTS 54
- B. DRAWINGS 56

APPENDICES

Appendix A. Cost Estimates
Appendix B. Photographs
Appendix C. Abrasive Water Jet Cutting
Appendix D. Diamond Core Drilling
Appendix E. Rotary Drilling
Appendix F. Safeguards and Security

ABBREVIATIONS

ALARA	as low as reasonably achievable
ANSI	American National Standards Institute
ASTM	American Society for Testing and Materials
BARCT	best available radionuclide control technology
CCTV	closed-circuit television
CFR	Code of Federal Regulations
DOE	U.S. Department of Energy
EA	Environmental Assessment
EIS	Environmental Impact Statement
EPA	U.S. Environmental Protection Agency
HEPA	high-efficiency particulate air
HVAC	heating, ventilating, and air conditioning
ICF KH	ICF Kaiser Hanford Company
NEPA	National Environmental Policy Act
SST	single-shell tank
TWRS	Tank Waste Remediation System
WAC	Washington Administrative Code
WHC	Westinghouse Hanford Company

ENGINEERING STUDY

INSTALLATION OF NEW RISERS IN SINGLE-SHELL TANKS

WORK ORDER ER5511

I. INTRODUCTION

A sampling program is being developed to characterize the 149 underground SSTs on the Hanford Site. The sampling effort will require access to the tank interior in a minimum of two locations per tank. Some of the risers suitable for sampling are either unavailable or are not in locations for proper characterization of the tank contents. Additional risers will be required in the SSTs to support the tank characterization sampling program.

The purpose of this engineering study is to review alternatives for installation of new risers in the SSTs.

II. SUMMARY AND CONCLUSIONS

A. TANK AND RISER CONFIGURATION

To characterize each SST, at least two samples of the tank contents will be required. One sample will be obtained from near the tank wall and a second sample from near the center of the tank. At least one existing riser is available for sampling near the tank wall for the majority of the SSTs (ref 1). This engineering study presents alternatives for the installation of new risers, preferably within a 20-ft radius of the tank center or in other areas of the tank as deemed necessary by sampling requirements or as obstructions from tank equipment allow.

There are 149 SSTs on the Hanford Site ranging from 55,000 to 1,000,000-gal capacity (25 tanks have a 1,000,000-gal capacity,

36 tanks have a 758,000-gal capacity, 72 tanks have a 530,000-gal capacity, and 16 tanks have a 55,000-gal capacity). The 1,000,000, 758,000, and 530,000-gal capacity tanks have a 75-ft inside diameter but vary in height. The 55,000-gal SSTs have a 20-ft inside diameter. This study will focus on the 133 tanks with a 75-ft diameter. Access for sampling of the 55,000-gal tanks will be studied and reported separately, if required.

The underground 75-ft diameter SSTs provide waste confinement by a single low carbon steel all welded inner liner within a reinforced concrete structure or shell. Each SST has a usable waste depth of approximately 16 to 30 ft at the sidewall. The bottom of the tank consists of a 6-in. layer of reinforced concrete covered with a 2-in. layer of grout and a 3/8-in. thick steel plate liner. The tank walls are 13-in. thick reinforced concrete. The steel liner extends 18 to 31 ft up the straight side of the shell, varying in thickness from 3/8 to 1/4 in. A 15-in. thick reinforced concrete dome is integral to the 13-in. thick reinforced concrete outer shell and is exposed to the tank waste. Steel liners were not provided for the concrete structural dome.

Summaries of the 149 SSTs located in the 200-West and 200-East Areas are shown in Tables 1 and 2.

TABLE 1

200-W AREA SINGLE-SHELL TANKS SUMMARY			
Year Constructed	**Tank Farm**	**Number of Tanks**	**Capacity (gal)**
1943-44	T	12	530,000
1943-44	T	4	55,000
1951-52	TY	6	758,000
1947-48	TX	18	758,000
1943-44	U	12	530,000
1943-44	U	4	55,000
1953-54	S	12	758,000
1953-54	SX	15	1,000,000

TABLE 2

200-E AREA SINGLE-SHELL TANKS SUMMARY			
Year Constructed	Tank Farm	Number of Tanks	Capacity (gal)
1948-49	BY	12	530,000
1946-47	BX	12	530,000
1943-44	B	12	530,000
1943-44	B	4	55,000
1943-44	C	12	530,000
1943-44	C	4	55,000
1954-55	A	6	1,000,000
1963-64	AX	4	1,000,000

B. GENERIC TANKS

This study develops a new riser installation generic for 133 of the SSTs. The tanks are in 12 of the tank farms and each tank dome has a different configuration of risers, pits, and piping. Two generic tank plans were created to show this variation:

- A "congested" tank plan (see Figure 1)
- A "less congested" tank plan (see Figure 2)

Typical elevations of these tanks are shown in Figures 3 and 4. The C Tank Farm is an example of a congested tank farm with Tank 241-C-104 selected as a typical "congested" tank installation. A less congested farm is the T Farm with Tank 241-T-107 selected as a typical "less congested" tank installation.

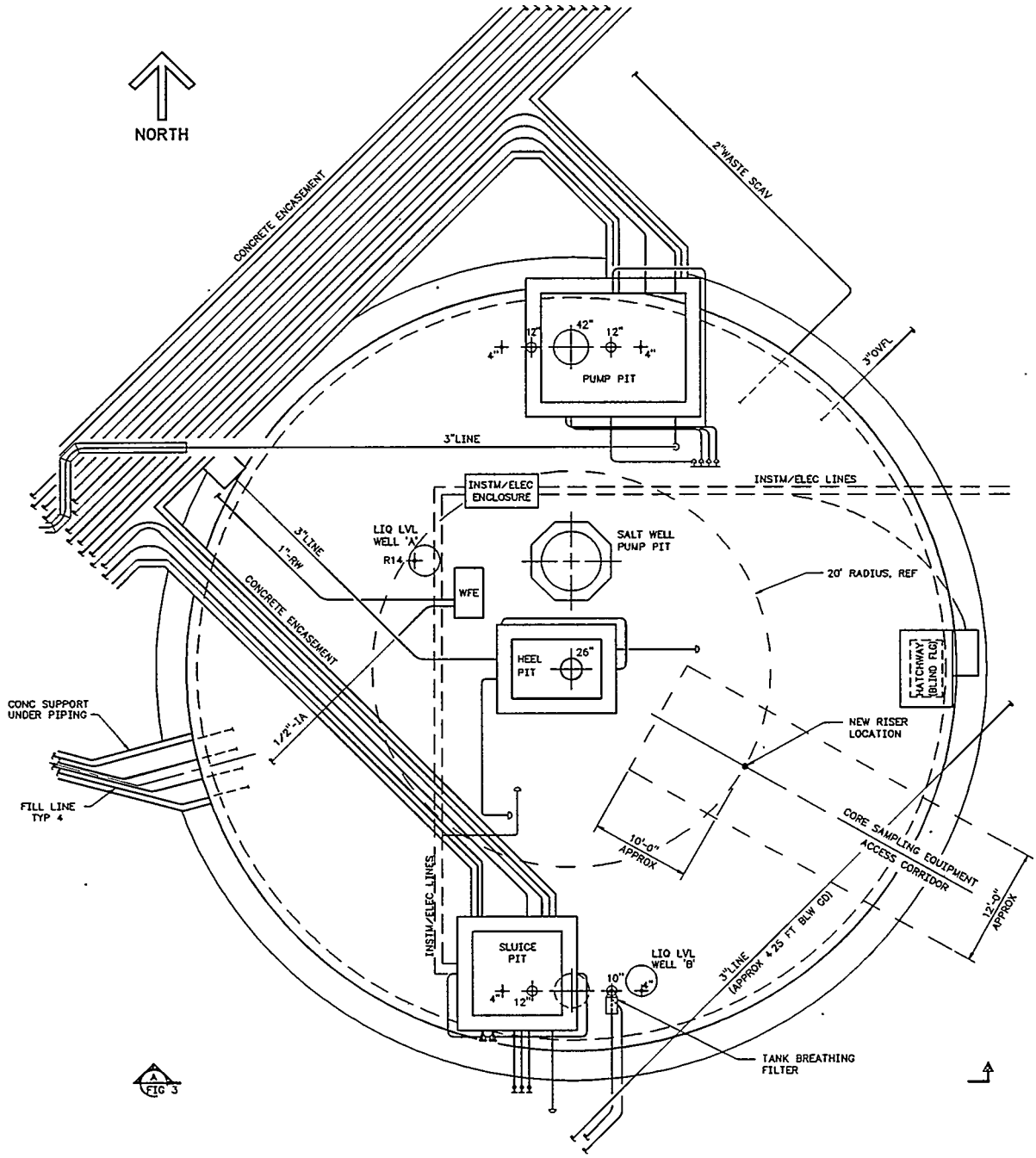

PLAN A

TYPICAL "CONGESTED" SST

(241-C-104)

FIGURE 1

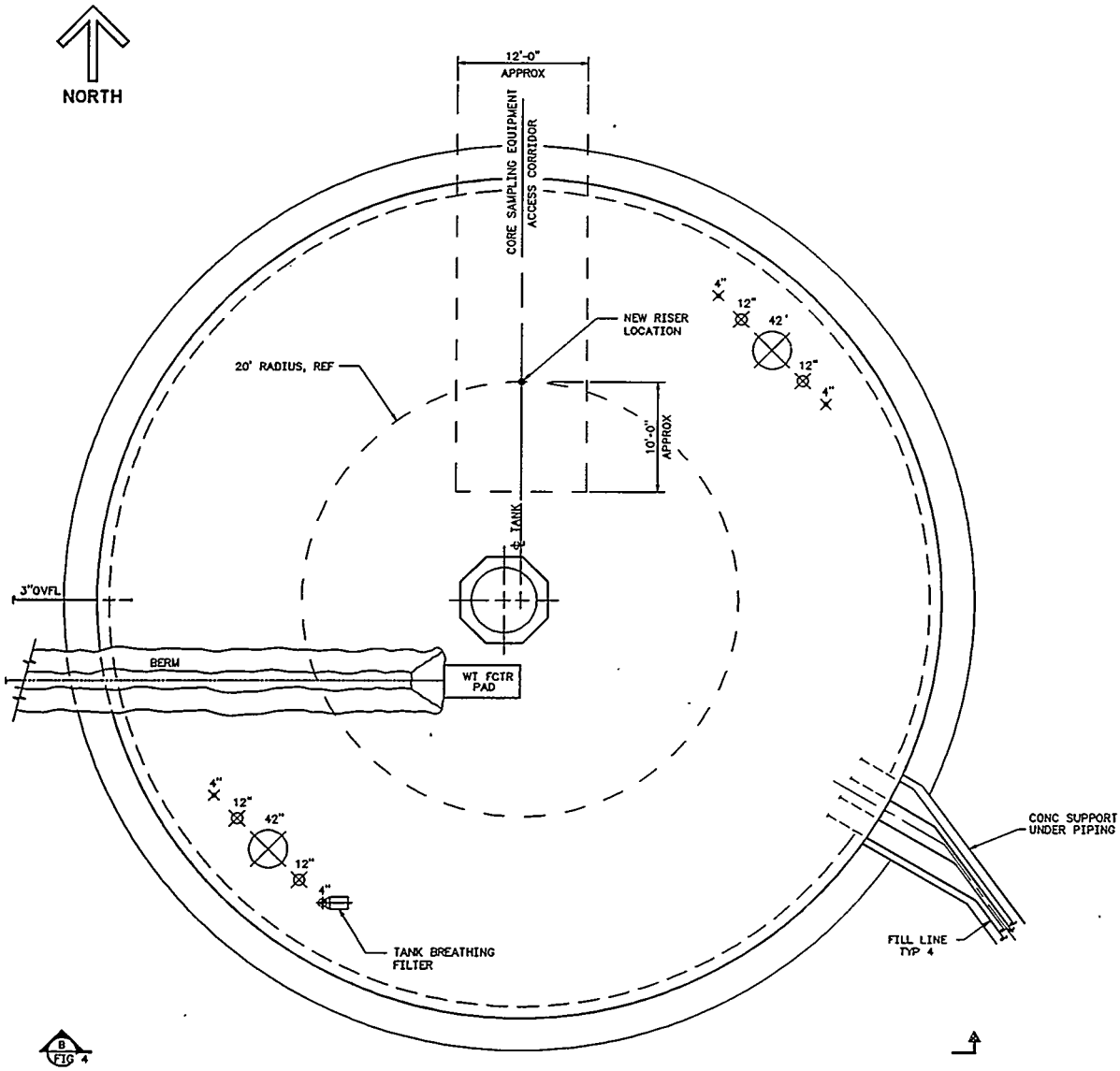

PLAN B
TYPICAL "LESS CONGESTED" SST
(241-T-107)

FIGURE 2

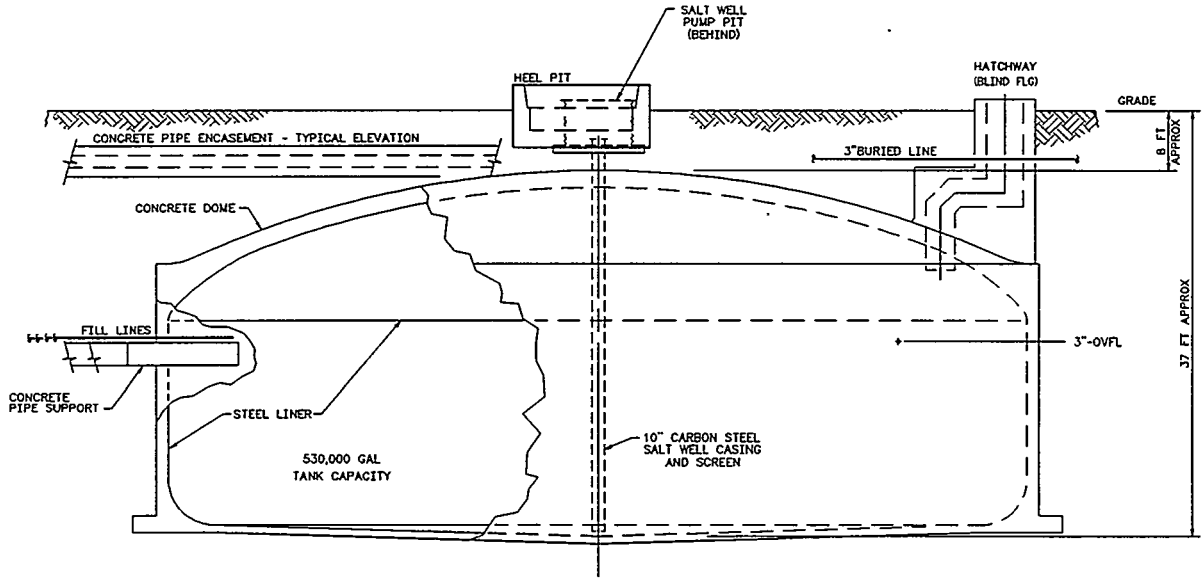

ELEVATION A
TYPICAL "CONGESTED" SST
(241-C-104)

FIGURE 3

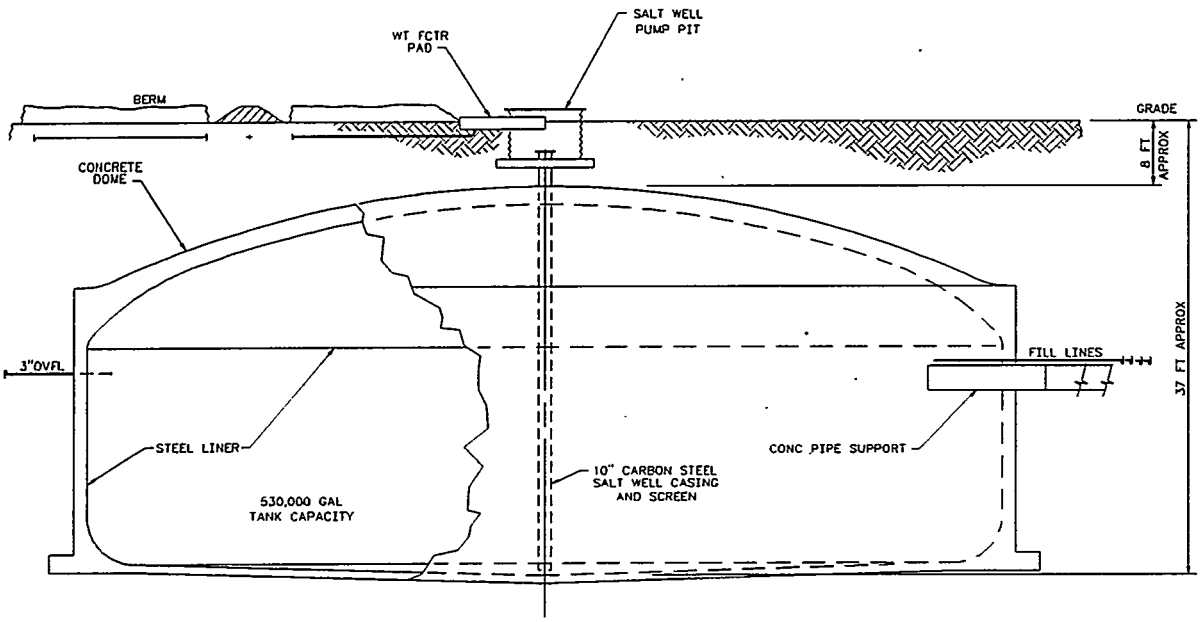

ELEVATION B
TYPICAL "LESS CONGESTED" SST
(241-T-107)

FIGURE 4

A congested tank farm will limit the location of new risers due to obstructions and interferences from existing underground piping and pits. An approximately $20,000 allowance was made for additional work required to support or shore utilities in a congested tank farm. The SST plans show typical locations for proposed new risers and their support equipment with the existing tank risers, utility pits, and underground concrete encasements and piping.

Radiation dose rates for personnel installing new risers will vary for each of the 133 SSTs. Dose rate measurements or estimates for the various SSTs have not been recorded and a generic dose or average dose rate could not be estimated. For this study, a "low," "medium," and "high" dose rate range was selected. A low dose rate was assumed to be less than 25 mRem/hr. Medium dose rate was between 25 and 500 mRem/hr. Greater than 500 mRem/hr was selected as a high dose rate. Different estimates were prepared for each alternative using these low, medium, and high dose rates.

C. RISER SIZE

A 12-in. new riser size was selected to allow the new riser to serve a variety of purposes. Sampling with the rotary truck will require a minimum 4-in. riser. Ventilation requirements during the sampling process requires an additional 6- to 12-in. riser. Other programs (e.g., the light duty utility arm) require a 12-in. riser. The cost differential for installing either a 4- or 12-in. riser should be minimal.

D. RISER INSTALLATION COSTS

In the past, Construction Forces installed risers in the SST domes. Hand excavation methods were used to access the tank dome and a diamond core drill was utilized to penetrate the tank dome. A new riser pipe was fabricated and installed in the dome penetration. The excavation was backfilled and a concrete surface pad was poured around the riser at

ground level, as necessary. This was considered a basic construction activity and environmental restraints were not so restrictive at that time. The cost of installing a riser, estimated to be less than $5,000, included material and labor costs and did not include WHC overhead costs.

Table 3 shows the costs for the various alternatives assuming all costs would be applied to installation of a single riser in one tank. The costs shown in the table include HVAC, core drilling, and supporting equipment required to install one new 12-in. riser. Cost estimates were prepared for low, medium, and high radiation zones in a noncongested tank farm (see Appendix A). An additional estimate was developed for hand excavating in a congested tank farm.

TABLE 3

ESTIMATED COST OF RISER INSTALLATION				
	Noncongested Tank Farm			Congested
Alternative	Radiation Area			Radiation Area
	Low ($)	Medium ($)	High ($)	Low ($)
Alternative 1: Hand Excavate Soil Cover and Safely Slope Overburden	2,383,000	3,669,000	10,534,000	2,403,000
Alternative 2: Hand Excavate with Shoring	1,341,000	(1)	(1)	(1)
Alternative 2a: Hand Excavate with Caisson	931,000	1,418,000	4,019,000	(1)
Alternative 3: Install Risers with Rotary Drilling Equipment	738,000	1,207,600	3,715,000	(1)
Alternative 4: Abrasive Water Jet Cutting for Dome Penetration	971,000	1,289,000	3,007,000	(1)
Alternative 5: Straddle Crane	2,074,000	2,455,000	4,487,000	(1)
(1) Estimate not developed for this case.				

Estimates were not developed for all cases. Alternative 2 had considerable cost savings when a caisson was used instead of shoring. The second case was for the noncongested versus congested tank farm. When large equipment, such as the rotary drilling rig or straddle crane are used, the congested tank farm will limit the location where this equipment can be placed. No cost increase could be identified in a congested tank farm for this type of equipment.

Table 4 shows the one-time set-up cost for each alternative. If a project was developed to install 5, 10, or more risers, this set-up cost could be divided among the risers reducing the cost per riser.

TABLE 4

ONE-TIME SET-UP COST	
Alternative 1: Hand Excavate Soil Cover and Safely Slope Overburden	$468,200
Alternative 2: Hand Excavation with Shoring or Caisson	$468,200
Alternative 3: Install Risers with Rotary Drilling Equipment	$468,200
Alternative 4: Abrasive Water Jet Cutting for Dome Penetration	$971,000
Alternative 5: Straddle Crane	$1,830,000

Figure 5 shows how the cost per riser is reduced if multiple risers are installed. For a noncongested tank farm with a low radiation dose rate, the cost per riser would be as shown in Table 4A if five risers are installed in a low radiation area.

TABLE 4A

COST PER RISER (Minimum Five Risers)	
Alternative 1: Hand Excavate Soil Cover and Safely Slope Overburden	$2,008,000
Alternative 2: Hand Excavate with Shoring	$966,000
Alternative 2a: Hand Excavate with Caisson	$556,000
Alternative 3: Install Risers with Rotary Drilling Equipment	$363,000
Alternative 4: Abrasive Water Jet Cutting for Dome Penetration	$384,000
Alternative 5: Straddle Crane	$610,000

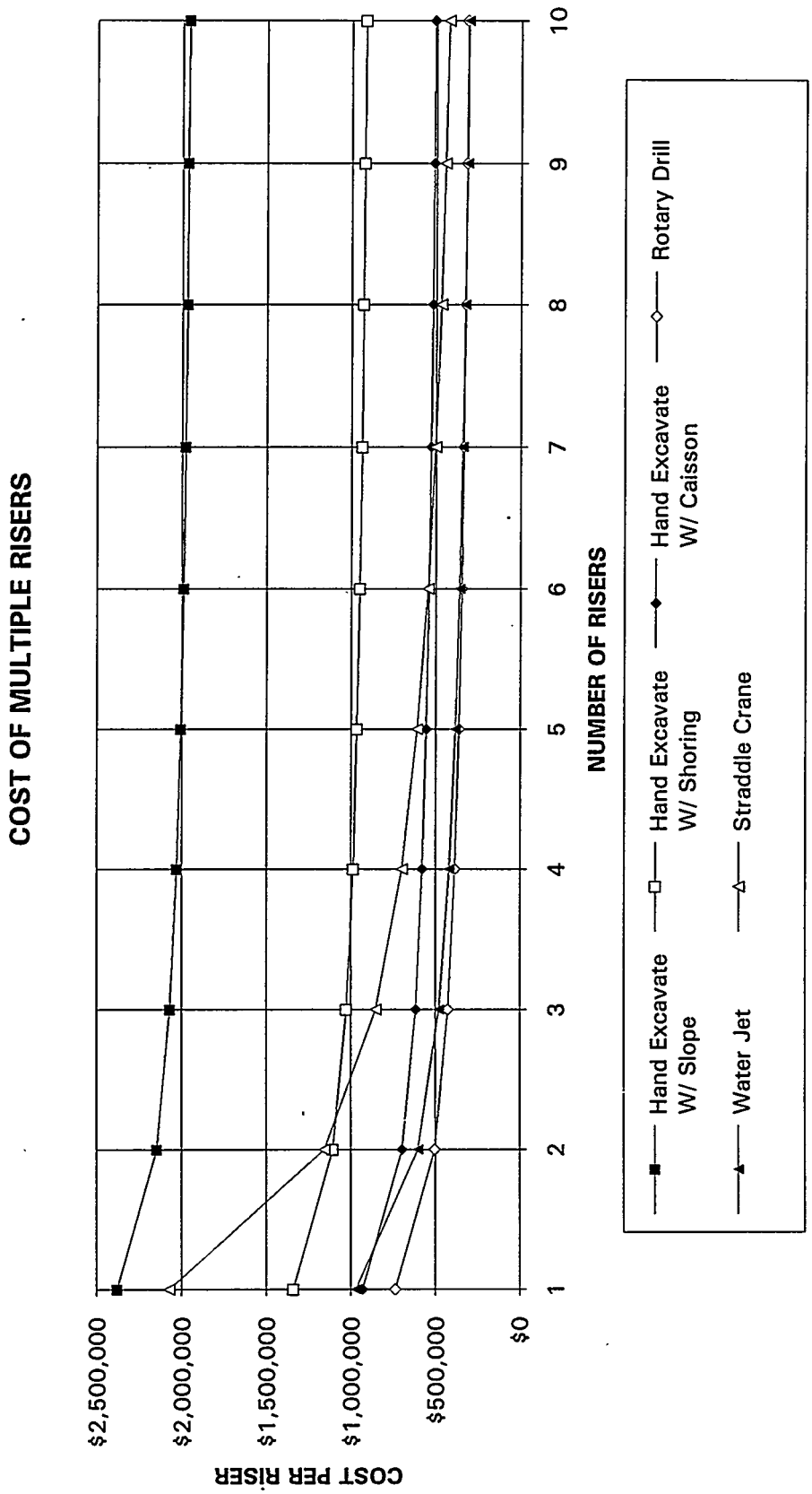
COST OF MULTIPLE RISERS
COST PER RISER
$2,500,000
$2,000,000
$1,500,000
$1,000,000
$500,000
$0
1
2
3
4
5
6
7
8
9
10
NUMBER OF RISERS
Hand Excavate W/ Slope
Hand Excavate W/ Shoring
Hand Excavate W/ Caisson
Rotary Drill
Water Jet
Straddle Crane

FIGURE 5

E. PERMITTING COSTS

The previous section, Riser Installation Costs, estimated the construction costs to add a new riser to a SST. Costs for preparing environmental permits, safety analysis, operating procedures, and other necessary documentation were not included. This section summarizes estimated costs for preparing these documents.

When an SST has been identified as requiring a new riser, environmental permits, safety evaluation, NEPA documentation, and installation procedures must be prepared. These permitting costs should be a one-time cost for a riser installation. If multiple risers are installed, permits and procedures put in place should be applicable. Table 5 summarizes the approximate costs and schedule for major permitting requirements.

TABLE 5

PERMITTING COSTS		
Task	**Cost**	**Schedule**
NEPA Documentation EIS[1] EA[2]	 $15,000 to $30,000 $5,000 to $120,000	 24 months 8 to 12 months
Air Permits	$220,000	8 months
Safety Requirements	$45,000	4 months
Safeguards and Security	None[3]	None[3]
Procedure Preparation	$40,000	4 months
Total	$425,000[4]	

[1] One option would be to include the new riser installation task in the TWRS EIS. Approximate schedule 24 months. Cost shown is the portion that this project would pay to be included in the TWRS EIS.

[2] Preliminary investigation has determined that an EA should be sufficient if NEPA documentation is performed separately for this project. EIS would not be required.

[3] No additional cost or schedule required if Alternatives 2 through 5 are selected. Additional cost and schedule will be required if Alternative 1, Open Excavation, is selected.

[4] Total cost includes maximum cost for EA and no cost for EIS. Subtract EA cost and add $30,000 to total cost if EIS is required.

F. CONCLUSIONS

Alternative 1, hand excavation with the overburden safely sloped has the highest cost. Little cost savings would be obtained if multiple risers were installed. Disposing of large quantities of potentially contaminated soil was the major cost.

Alternative 2 studied hand excavating with either shoring or a caisson. Reducing the amount of excavated soil reduced the total cost. Hand excavating with shoring was the third costliest alternative assuming a single riser was installed and the second costliest if multiple risers were installed. Using caisson to shore the excavation would reduce the cost considerably when compared to Alternative 1 or 2 with shoring. Alternative 2 with a caisson was the fifth costliest alternative for a single riser installation and the fourth costliest if multiple risers were installed.

Alternative 3, using available rotary drilling equipment, was the third alternative reviewed. This alternative had the lowest estimated cost for both a single riser installation and multiple riser installations.

Alternative 4 studied using an abrasive water jet installed down a small diameter riser. Costs for this approach was the fourth costliest for a single riser and the fifth costliest for multiple risers.

Alternative 5 studied using specialized equipment to install the risers. This special equipment uses a straddle crane with accessories designed for excavation, penetration of the dome, and riser installation. The cost was the highest if the equipment and procurement were charged against the cost of a single riser. Considerable cost saving resulted if the costs were divided among five risers. The straddle crane was the fifth costliest alternative, or slightly above the cost of rotary drilling if five or more risers were installed.

Criteria used to evaluate the alternatives used high values for safety and ALARA principles. Straddle crane had the highest rating using these principles and should be evaluated further. Rotary drilling ranked second highest using the evaluation criteria and lowest in cost. ICF KH recommends that rotary drilling be tested to determine if a riser can be safely installed using available monitoring well installation and soil sampling equipment and techniques.

III. DESCRIPTION OF ALTERNATIVES

A. CRITERIA

The purpose of this study is to develop and report methods and estimated costs for adding tank access risers in SSTs. A new riser installation will require a method of penetrating 7 to 10 ft of soil overburden over the tank dome, cutting a new hole in the tank dome, and installing a new riser.

B. SITE PREPARATION AND CONSTRUCTION SEQUENCE

When an SST has been identified as requiring a new riser, numerous tasks must be scheduled and completed prior to installation. These tasks include site familiarization, riser location determination, and permitting. Following is a list of tasks that have been identified by this study.

- Prepare NEPA documentation.
- Prepare safety documentation.
- Define tank and desired riser location.
- Perform research using available documentation to locate all risers, pits, underground piping, and other obstructions.

- Perform a field walkdown and underground scan to identify all buried underground objects and obstructions.

- Locate and route all necessary utilities to the riser site.

- Determine an access route for equipment to reach the new riser location.

- Finalize the riser location and obtain all other necessary permits including an excavation permit and other environmental permits.

- Evaluate safeguards and security.

- Perform design review.

- Analyze tank head vapor space.

- Prepare operating procedures and work packages.

Utilities

The following utilities may be required from a temporary or a permanent supply:

- **Raw Water Supply:** Maximum estimated use of 20 gal/min at 50 psig depending upon alternative selected. Some equipment may have an adequate onboard storage and will not require a external water supply.

- **Electrical Power:** 480 Vac, 3-phase and 120/240 Vac, single-phase with a total capacity of approximately 20 kVA. This includes HVAC equipment for the tank and greenhouse ventilation, core drilling machines, and miscellaneous loads.

Greenhouse Description

A greenhouse at the riser installation site will confine potential airborne contamination. The greenhouse will be assumed to be approximately 15 by 15 by 15 ft and constructed of wood or steel framing with a fire retardant plastic covering.

HVAC Equipment and Requirements

Proper ventilation must be maintained on the tank when the tank is open. This HVAC system will include both a tank ventilation system and a greenhouse HVAC system. Filtration requirements will depend on field conditions (see Figure 6).

An HVAC system will be required during the dome drilling operations, removal of the plug, and installation of the new riser. This will help maintain radiation and contamination levels to ALARA principles. By maintaining lower than atmospheric pressure within the tank during drilling operations, any openings in the tank will have airflow going into but not out of the tank. When the plug is removed from the tank, air will continue to flow into the tank to help control contamination. The HVAC system will be a portable unit (mobile skid-mounted) that can be used on various tanks. A riser will be designated as a connection for the exhaust system prior to drilling.

The minimum portable exhaust system equipment will include a flexible duct connecting the exhaust system to an available tank riser. Flanges of various sizes (6 to 12 in. diameter) may be required to connect to any of the different existing tank risers. An electric heater will be used to raise the temperature and lower the relative humidity of the exhaust air for HEPA filter protection. Using prefilters will extend the life of the HEPA filters. An exhaust fan made of nonsparking material will be used to pull

NOTES:

1. STANDARD REFERENCE DEFINED AS 70 FDB, BONE DRY AIR AT 14.696 PSIA.
2. CASCADE LINES BETWEEN TANKS ARE ASSUMED TO BE OPEN.
3. EXISTING EXHAUSTER AND AIR INLET REMAIN CONNECTED AND VALVED OFF
4. DRILL RIG SUPPLIES 150 CFM NITROGEN TO DRILL BIT. (IF USED)
5. MAJORITY OF TANKS DO NOT HAVE EXISTING EXHAUSTERS.

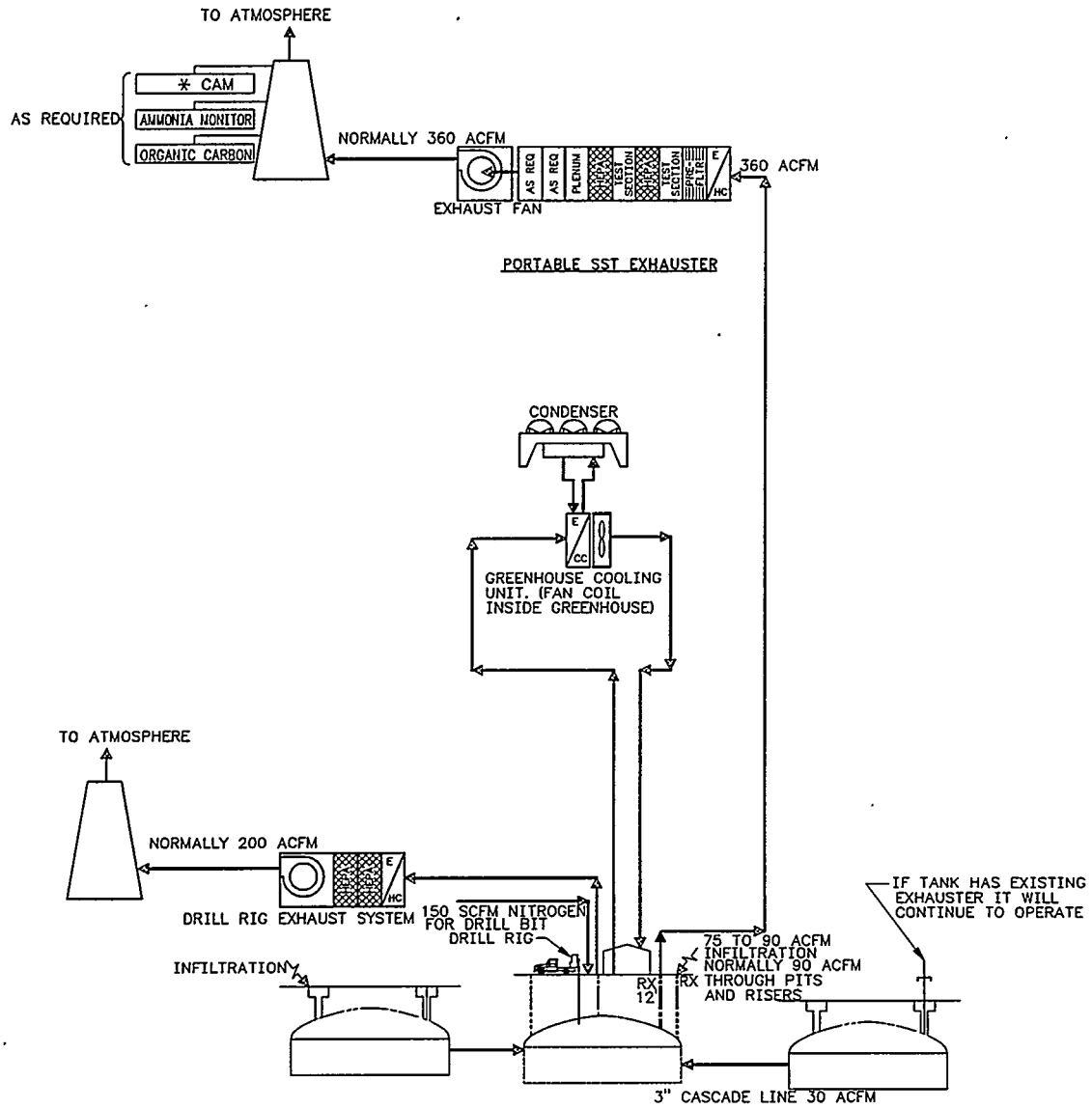

HVAC FLOW DIAGRAM

FIGURE 6

the air through the HEPA filters and associated test equipment before flowing through an exhaust stack into the atmosphere. The exhaust stack will be monitored for various contaminants. Controls and instrumentation will be included for the HVAC system. The system will be sized to maintain an inflow velocity at a minimum of 300 ft/min through the open hole cut into the tank. The system will have a capacity of approximately 360 cfm (actual).

Before installing the new riser, a head vapor space sample will be taken from each tank. The sample will be analyzed to determine if the air can be exhausted into the atmosphere with simple HEPA filtering. If the air needs further treatment before release, modifications to the exhaust train design will be made to remove the harmful constituents. The HVAC system should be designed to allow necessary modifications.

The greenhouse HVAC system will be primarily for cooling and possibly for contamination control. The cooling unit will reduce the potential of heat exhaustion of the workers dressed in full anticontamination clothing and a respiratory mask. The greenhouse is typically a very hot environment by early morning on a summer day. A maximum temperature for the greenhouse has not been established but it may be between 72 and 80°F. The HVAC unit may require HEPA filtration. If contamination control is required, it would be desirable to exhaust from the greenhouse from as low a point as possible and return the air from as high a point as possible for the air to flow in a downward direction. This would help keep contamination ALARA. The size of the cooling system will depend on the size of the greenhouse and any heat generating equipment located within it.

C. RISER INSTALLATION ALTERNATIVES

Alternative 1: Hand Excavate Soil Cover and Safely Slope Overburden

Hand excavation requires 7 to 10 ft of excavation over the tank dome with backslopes that permit safe personnel access to the tank dome (see Figure 7). Excavations greater than 4 ft deep require backslopes 1.5 horizontal to 1 vertical minimum, or shoring installed to prevent cave-ins of the excavation.

Hand excavation will require disposing between 100 yd^3 and 220 yd^3 of soil, depending upon the necessary depth to the tank dome.

Excavation Methods

Methods for excavating include hand digging, machine digging, and air conveyance.

- **Hand Digging**

  Excavation by hand digging reduces the potential of damaging underground utilities since the loads and forces from hand tools are low. The tools are readily available and inexpensive.

  Hand digging can be performed over tanks where flammability is an issue by using shovels and other hand tools that are manufactured out of nonsparking materials.

  Hand digging will require workers to be in close proximity to potentially contaminated soil and the tank dome. Worker exposure limits may be a major factor depending on radiation levels.

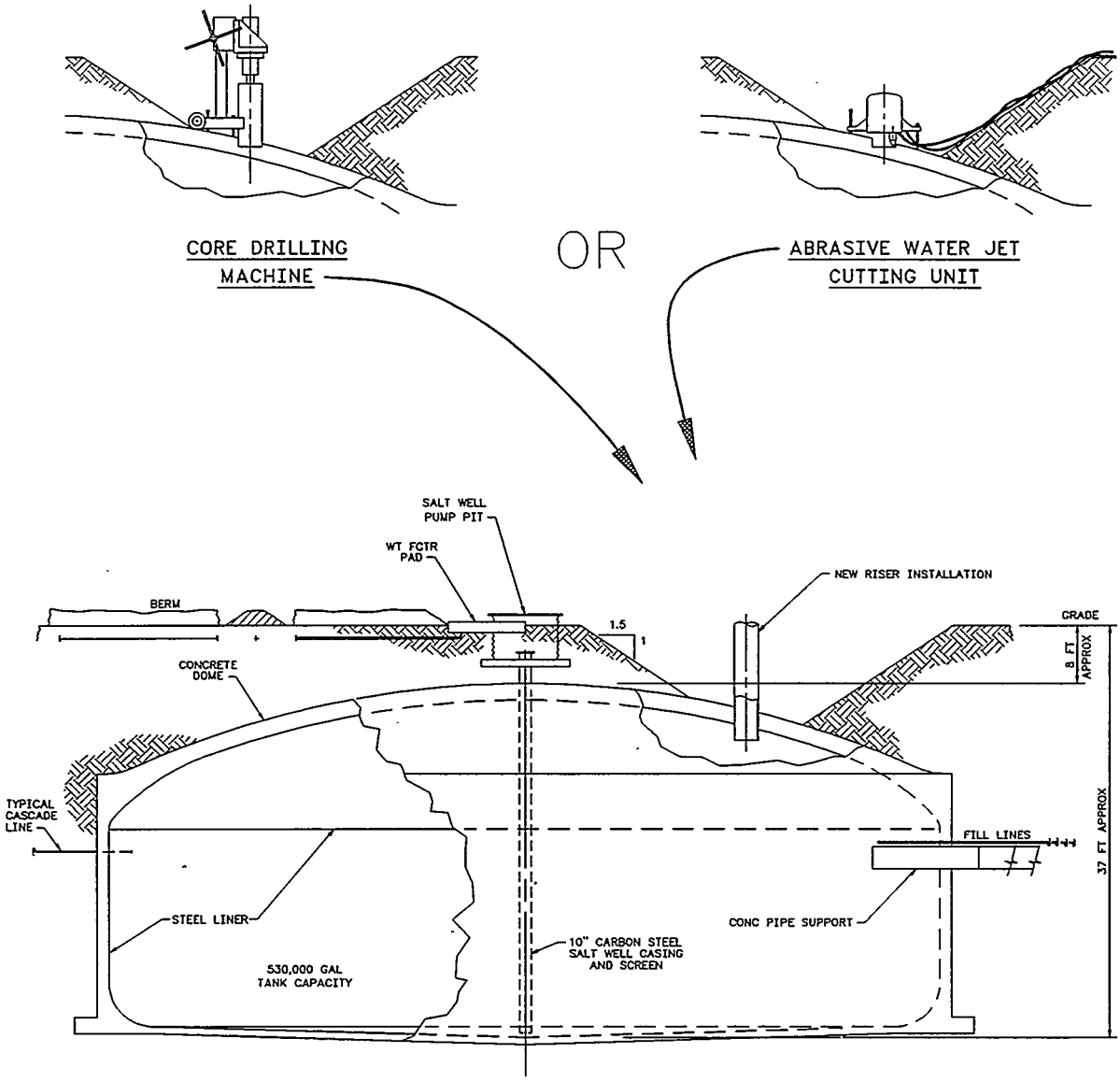

OPEN EXCAVATION

(ELEVATION OF SST WITH RISER INSTALLED, SHOWING TANK DOME PENETRATION METHODS)

FIGURE 7

- **Machine Digging**

  Excavation of the overburden could be performed using backhoes or other powered excavation equipment. Large amounts of soil can be removed with relative ease with this type of equipment, but due to the restricted maneuverability, there is a high potential for damage to existing electrical cables, piping, and risers, especially in congested areas. This type of equipment raises a large amount of dust which could lead to airborne contamination.

  Due to the high potential for damage using machines, this method of excavation is not recommended.

- **Air Conveyance**

  The air conveyance method of transporting materials is the use of ducted high velocity air to move particles from one location to another (the same principle as a vacuum cleaner). A pickup hose, nozzle, cyclone separator, and air filtering are the basic equipment.

  When properly designed, an air conveyance system could transport several tons per hour of smaller sized soil particles. It may not be possible to transport larger sized rocks or cobbles with such a system.

  The advantages of the air conveyance method are that it has little potential to damage existing piping and it can vacuum the smallest cracks and crevices. The disadvantage is that the soils over the SSTs are composed of a mixture of fine and coarse sand and rock. The soil is likely to be compacted to about 120 lbs/ft^3 and its mobility, in absence of mechanical means, is in question.

  Air conveyance systems have been reviewed in other studies (ref 9) but no development or testing has been undertaken at Hanford using

this technique. For these reasons, cost estimates using air conveyance systems were not made.

Tank Dome Penetration

Excavating the soil backfill over the tank dome with backslopes will allow direct access to the tank dome. Some of the advantages of open excavation are that the reinforcing steel can be located and the dome penetration can be relocated to minimize the cutting of the steel reinforcement bars in the concrete dome. The disadvantage of open excavation is that the radiation shielding provided by the soil will be removed which would expose the workers to potentially higher radiation.

Dome penetration can be accomplished with either of two available methods: diamond core drilling or abrasive water jet cutting.

- **Diamond Core Drilling**

  Diamond core drilling can be accomplished by using a portable diamond core drilling machine that uses a barrel with synthetic diamonds embedded in the cutting edge. These machines are commonly used to drill cores in reinforced concrete (see Figure 7). Diamond core drilling machines are available in a variety of size and power sources. Smaller machines are generally available with an electric motor having a power rating of 1/2 to 1 hp. Larger machines are available with electric, air, or hydraulic motors. Examples of available equipment are shown in Appendix D. Diamond drilling bits generally are cooled with water. Following are the steps required to diamond core drill the tank dome:

  1. Locate and install the diamond core drilling machine. Coring machines are attached to the tank dome with concrete anchor bolts. After attaching, the machine must be levelled to ensure drilling vertically through tank dome.

2. Attach power and cooling water sources.

3. Begin core drilling and continue until the interior of the tank is reached. Drilling time should take 4 hours to penetrate the 15-in. thick tank dome.

4. Remove the concrete core and drilling machine.

5. Install a temporary shielding plug in the tank dome penetration.

6. Recover concrete core, decontaminate, and send to laboratory for testing.

- **Abrasive Water Jet Cutting**

  Abrasive water jet cutting uses high pressure water with added abrasive material in a controlled jet stream to cut through the reinforced concrete dome (see Figure 7). Components for abrasive water jet cutting systems are procurable and can be configured easily for cutting small diameter cores through reinforced concrete. A standard or custom reusable tracking system (steel framework) design will be required to support and guide the cutting head nozzle through a circular cutting path. At the core of any abrasive water jet system is a cutting head where a high energy stream of water entrains dry abrasive (e.g., garnet or steel grit) into a mixing chamber. The resulting mixture exits through a nozzle as a high velocity coherent abrasive jet stream capable of cutting through hard materials such as steel, reinforced concrete, composite structures, and stone.

Components

Components of the abrasive water jet cutting are described in Alternative 4.

The following steps are required to cut a penetration into a tank dome with the abrasive water jet cutting unit:

1. Locate and install the abrasive water jet cutting unit on the tank dome with anchor bolts or bracing.

2. Level the abrasive water jet cutting unit to ensure drilling vertically through the tank dome.

3. Attach high pressure water hoses, abrasive feed line, and vacuum suction lines to cutting unit from the support equipment.

4. Secure the concrete core slug with an anchor bolt and retention line to prevent it from falling into the tank.

5. Begin abrasive water jet cutting. The cutting and deep kerfing should take 4 hours to penetrate the 15 in. thick tank dome.

6. Remove the cutting unit and concrete core slug.

7. Install a temporary shielding plug in the tank dome penetration.

8. Recover concrete core, decontaminate, and send to laboratory for testing.

Alternative 2: Hand Excavate with Shoring or Caisson

Alternative 2 evaluates either sinking a caisson or incrementally installing shoring for a vertical excavation (see Figure 8). Caisson or shoring will be approximately 8 ft in diameter which is large enough to allow personnel to perform the excavation and setup the concrete boring equipment when the pit reaches the tank dome. Excavations deeper than 4 ft require either safe backslopes, shoring, or a caisson to protect workers from cave-ins.

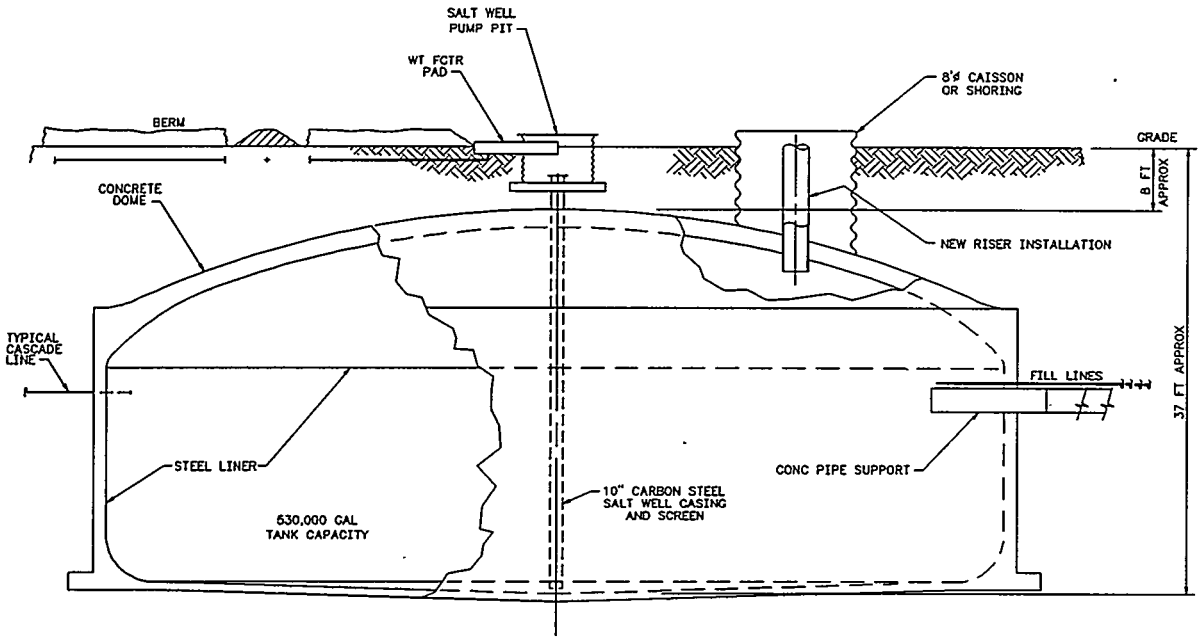

ELEVATION OF SST WITH 8 FT DIA
CAISSON OR SHORING INSTALLED

FIGURE 8

Excavation Method

Potential methods for excavating include hand digging, machine digging, or air conveyance. However, for this alternative, only hand digging was considered for the reasons discussed in Alternative 1.

- **Hand Digging**

  Excavation by hand digging reduces the potential of damaging underground utilities since the loads and forces from hand tools are low. Tools are readily available and inexpensive.

  Hand digging can be performed over tanks where flammability is an issue by using nonsparking tools.

  Hand excavation is slow and tedious work and efficiencies are reduced if extensive protective clothing is required to be worn.

  Worker burnout may be a major factor where high radiation levels exist.

Tank Dome Penetration

Providing a caisson or shoring will reduce the amount of soil excavation and disposal. An 8-ft diameter area in the caisson will allow personnel to reach the tank dome and set up the dome penetration equipment. Personnel will have direct access to the tank to allow the tank dome to be inspected and the tank dome can be scanned to locate the reinforcing steel. One of the advantages of this method is that after the reinforcing steel is located, the dome penetration can be relocated to minimize the cutting of the steel. The disadvantages are that the 7- to 10-ft deep excavation will require confined space work procedures, and reduced radiation shielding provided by the soil would expose the workers to potentially higher radiation.

Dome penetration can be accomplished with either diamond core drilling or abrasive water jet cutting.

- **Diamond Core Drilling**
  (See Alternative 1 for description.)

- **Abrasive Water Jet Cutting**
  (See Alternatives 1 and 4 for descriptions.)

Alternative 3: Install Risers with Rotary Drilling Equipment

Rotary drilling equipment is readily available and commonly used for drilling wells, boring for soil samples, and other tasks. Alternative 3 describes techniques using rotary drilling to install new risers. This approach uses rotary drilling techniques to auger a hole to the top of tank dome and set a casing. Then, a diamond core drill bit is attached to drill through the tank dome (see Figures 9 and 10).

A rotary drill is available and was evaluated for this study. This rotary drill is designed for drilling using large hollow stem augers (see Appendix E).

Hollow stem augers are commonly used to perform groundwater monitoring or soil sampling. These augers consist of a steel pipe with auger flights attached to the outside. Attached to the bottom of the auger is a cutting head with teeth designed to cut and allow the auger to advance into the soil. As the auger rotates, the cutting head cuts the soil and the cuttings are brought to the surface along the outside of the casing with the spiral auger flights (see Figure 9). An example of a hollow stem auger is shown in Appendix E, page E-5.

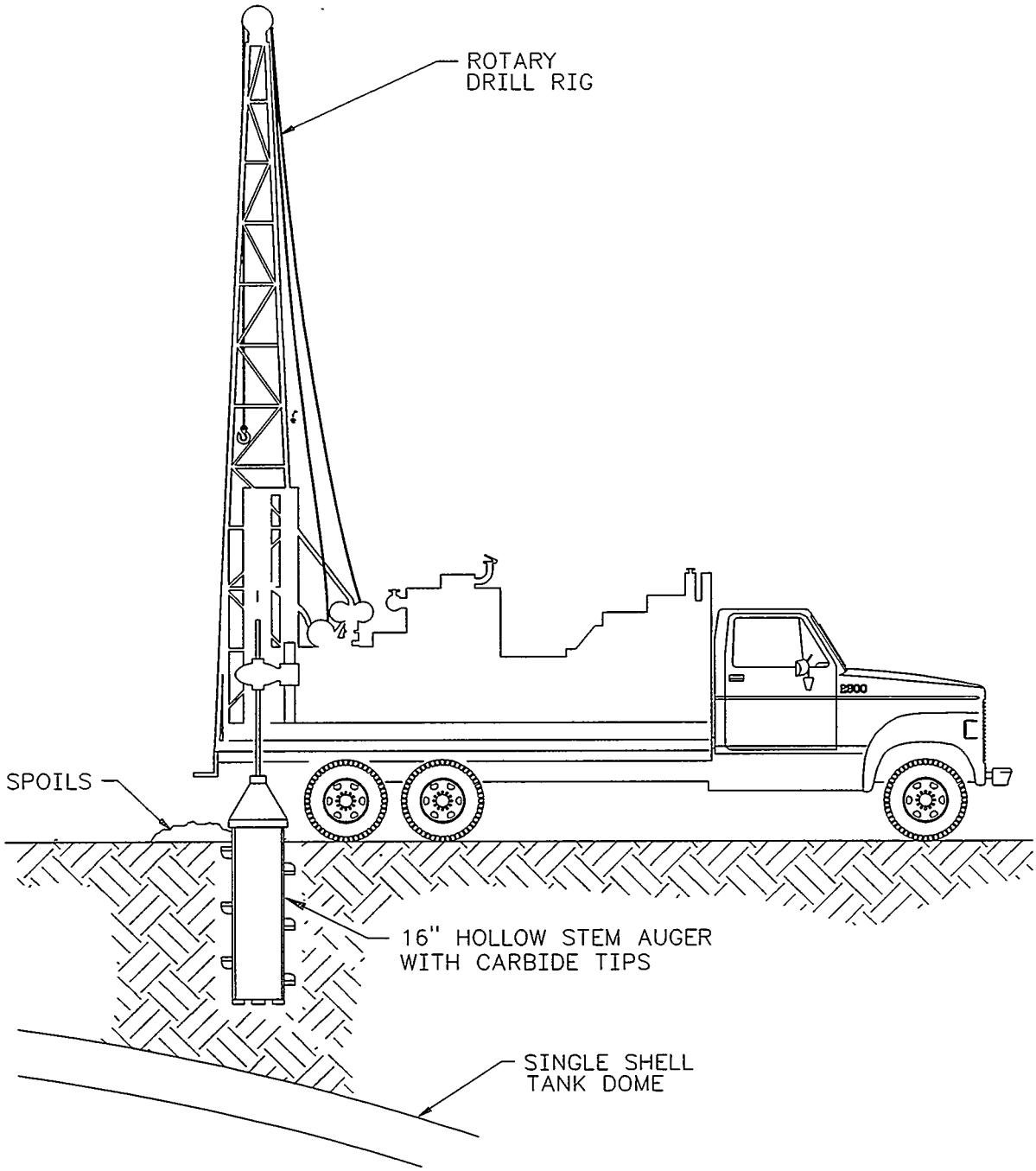

ROTARY DRILLING WITH
HOLLOW STEM AUGER

FIGURE 9

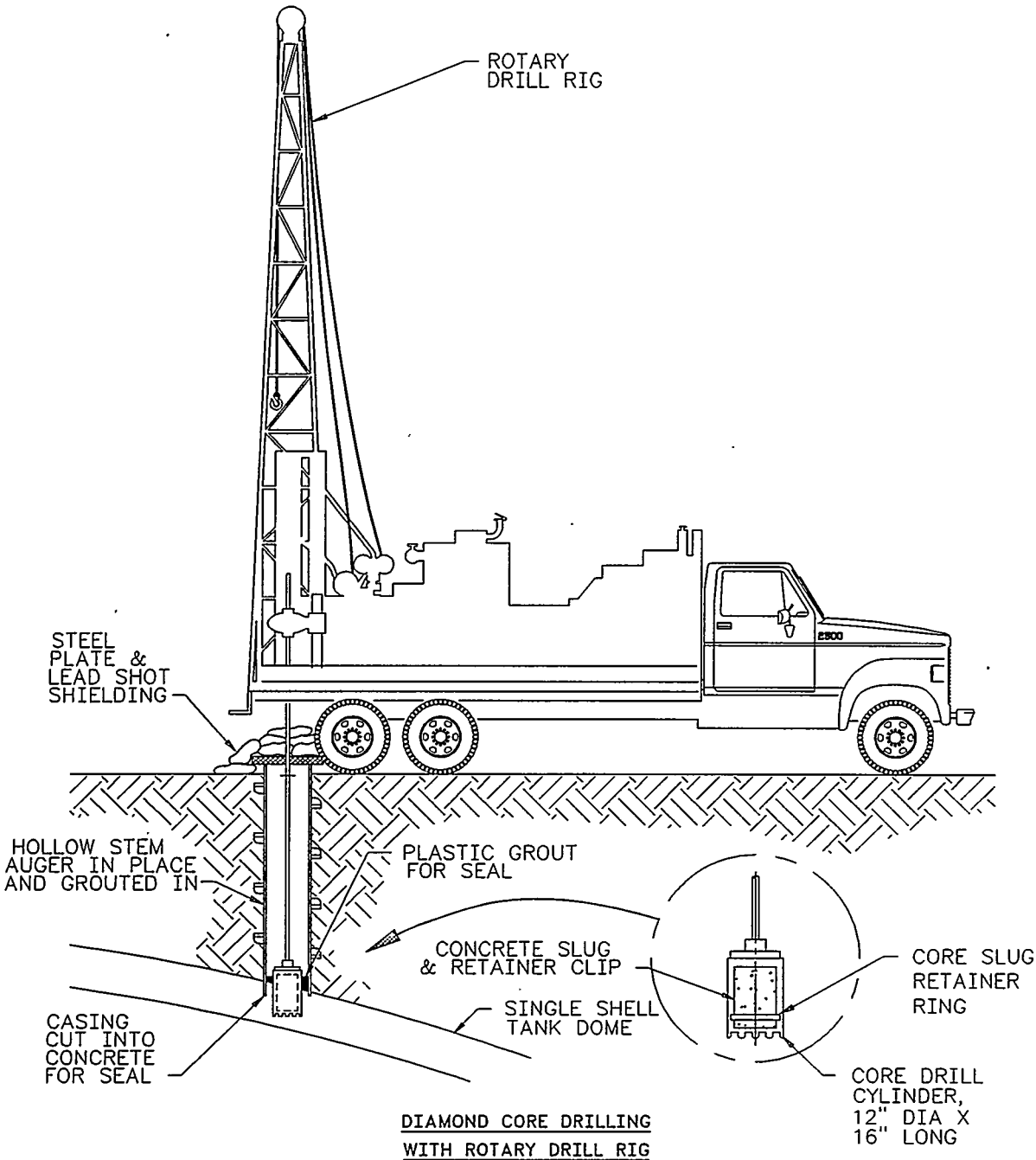

DIAMOND CORE DRILLING
WITH ROTARY DRILL RIG

FIGURE 10

Rotary Drilling Techniques

The SST concrete dome is covered by 7 to 10 ft of soil. Alternative 3 studies using auger drilling techniques to access the tank dome. Auger drilling can be performed by one of the following methods:

- **Large Diameter Auger Flight Left in Place**

  The first option is to use a large diameter hollow stem auger where the inside diameter of the auger is larger than the outside diameter of the new 12-in. riser to be installed. The auger will be left in place and serve as a casing for riser installation. Drilling will commence as described in the following steps:

  1. The auger will bore down through the soil until the carbide or diamonds cutting teeth contact the concrete tank dome.

  2. Drilling will continue for an additional 1 to 2 in. to cut into the tank dome.

  3. The bottom of the auger will be grouted to provide a seal between the auger and the tank dome.

  Using this approach, the large diameter auger will not require decontamination or disposal.

- **Large Diameter Auger Flight Removed**

  A second option is to select a large diameter hollow stem auger sized to allow a 14- or 16-in. casing to be inserted inside the hollow stem. A casing will be inserted and the auger will be removed as described in the following steps.

  1. The large diameter auger will bore down through the soil until the cutting teeth contact the concrete tank dome.

2. A 14- or 16-in. diameter casing will be inserted inside the hollow stem auger.

3. The bottom of the casing will grouted to provide a seal between the casing and the tank dome. Soil surrounding the casing could be grouted by slotting the bottom of the casing to allow the grout to flow out into the soil surrounding the casing.

4. The auger will be removed leaving an outer casing in place.

5. The auger will decontaminated and reused or disposed of, as required.

Tank Dome Penetration

To penetrate the tank dome, the rotary drilling rig will install a core barrel cutter on the drill stem. This cutter is a round cylinder with diamond cutting teeth and is powered by the rotary drilling rig. To capture the concrete core, a core-retaining spring is inserted inside the barrel cutter cylinder to retain the core when drilling is complete. Further details of a typical core barrel cutter are shown in Appendix E, page E-6. The drilling will commence when the grout seal in the bottom of the casing on the tank dome is properly cured. When the barrel cutter penetrates to the inside of the tank, the cutter along with the concrete core will be pulled out of the casing.

The core barrel cutter with concrete core slug will be sent to a laboratory for extraction and further testing. The barrel cutter will be prepared for reuse if possible.

Alternative 4: Abrasive Water Jet Cutting for Dome Penetration

Alternative 4 reviews the use of abrasive water jet cutting through a small 4 ft diameter caisson. Components of this cutting system compare to

those in Alternative 1 with the exception that the cutting system will be lowered down a small diameter caisson where the work will be performed remotely. Abrasive water jet cutting equipment will be lowered through this caisson.

Abrasive water jet cutting uses high pressure water with added abrasion in a controlled jet stream to cut through any material. Components for abrasive water jet cutting systems are procurable and can be configured easily for cutting small diameter cores through reinforced concrete (see Figure 11). A standard or custom reusable tracking system (steel framework) design will be required to support and guide the cutting head nozzle through a circular cutting path. The main technique of any abrasive water jet system is a cutting head where a high energy stream of water entrains dry abrasive (e.g., garnet or steel grit) into a mixing chamber. The resulting mixture exits through a nozzle as a high velocity coherent abrasive jet stream capable of cutting through hard materials such as steel, reinforced concrete, composite structures, and stone.

Components

Components required for abrasive water jet cutting are available from components available on site or from various manufacturers and suppliers (see Appendix C). Following are generic descriptions of components and support equipment common to most packaged or custom-designed abrasive water jet systems.

Cutting Head

The cutting head is where a high energy 35,000 to 60,000-psi stream of water up to 7 gpm entrains dry abrasive (e.g., garnet or steel grit) into a mixing chamber. The resulting mixture exits through a nozzle at a high-velocity, coherent abrasive jet stream capable of cutting through virtually

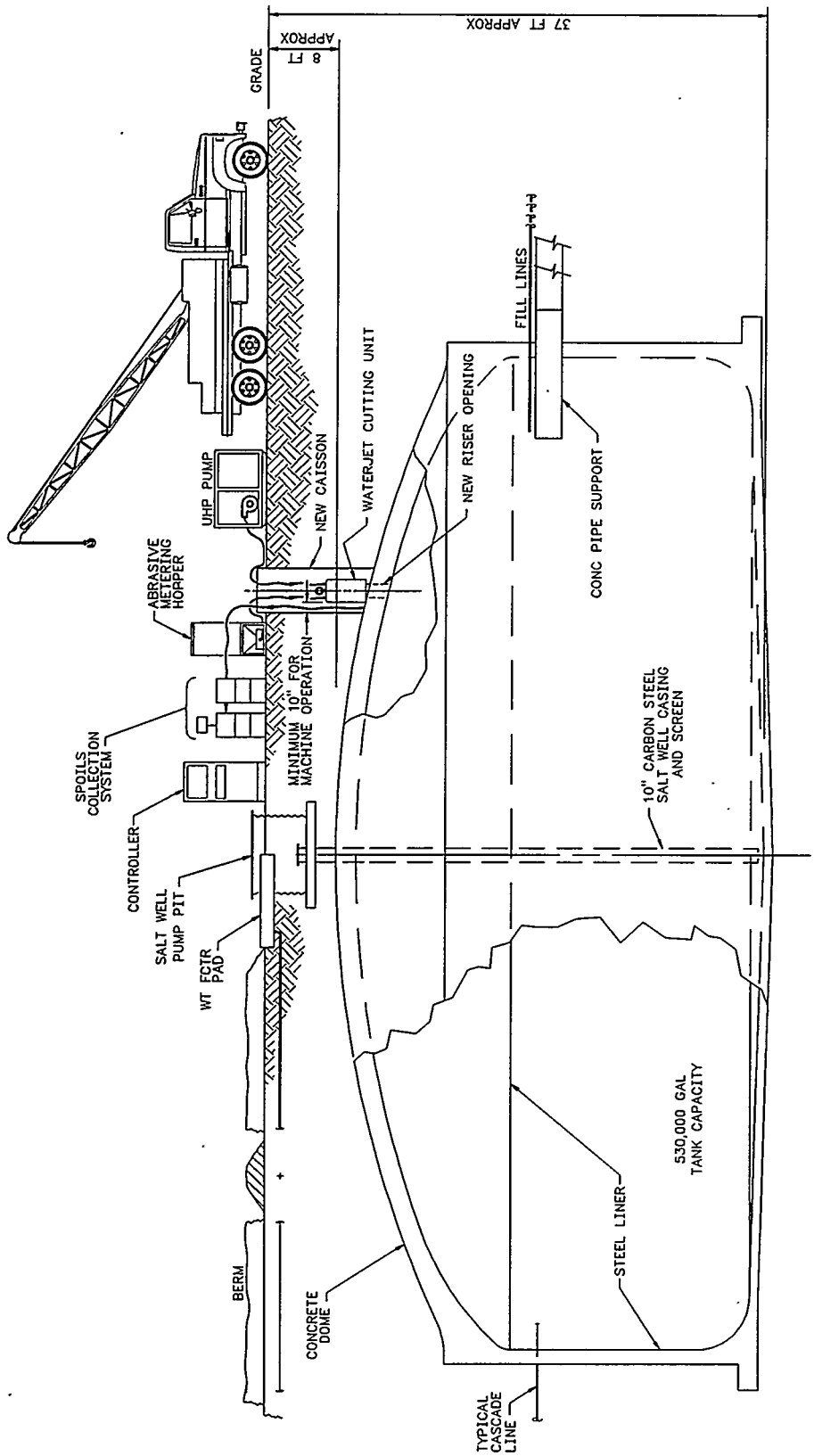

ABRASIVE WATERJET CUTTING

SYSTEM COMPONENTS FOR SST

FIGURE 11

any material. A cutting head can be mounted on various arms or custom designed, computer-controlled support tooling for remote cutting applications. See Appendix C (pages C-15, C-21, and C-32) for abrasive water jet cutting head examples.

- **Abrasive Water Jet Deep Kerfing**

  A variation of a cutting head called abrasive water jet deep kerfing was developed under the sponsorship of the DOE for the West Valley Demonstration Project. Developed and tested abrasive water jet deep kerfing technology allows for controlled cutting depth to be maintained (ref 2). It is suggested this type of cutting head be used to minimize the amount of water and abrasive materials entering the SST during core cutting activities (assume one cut to a depth of 13 in. followed with a second cut to complete access opening to minimize water and cuttings from entering the SST).

- **Abrasive Delivery System**

  Typical abrasive delivery systems consist of a portable storage hopper, metering valve, and a portable air compressor to service pneumatic mixing and to deliver abrasive to the cutting head via a connecting low-pressure abrasive feed line. Feed rates of dry abrasive vary between 2 to 3 lb/min depending on cutting rates and operating pressures used for abrasive water jet cutting. See Appendix C, pages C-22 and C-33, for examples of abrasive delivery system components.

- **High-Pressure Water Pump**

  The abrasive water jet cutting head requires a source of high-pressure water (40,000 to 60,000 psi and up to 7 gpm). The high-pressure water pump needs to be self contained and portable. A typical high-pressure water pump could be diesel or electric and

combined with an intensifier to maximize water pressure. An ultra high-pressure hose would connect the high-pressure water pump to the abrasive water jet cutting head. See Appendix C, pages C-23 and C-35, for examples of high pressure water pumps.

- **Spoils Collection System**

  A typical self-contained spoils collection system consists of a vacuum source connected to two closed containers where solids, water, and air are separated. A vacuum hose is connected between separation containers and a suction nozzle located near the abrasive water jet cutting head. The spoils collection system can be powered by an electric motor or diesel/gas engine. The vacuum exhaust for this system will require HEPA filters with monitoring ability to detect potential contamination. Survey personnel will monitor all spoils collection system components during abrasive water jet cutting activities. If contaminated materials are found, established procedures will be followed for decontamination or proper disposal.

- **Portable Electric Generator**

  A self-contained electric generator with adequate capacity to operate the abrasive water jet cutting equipment (e.g., cutting head traverse device, dry abrasives delivery equipment, and spoils collection system) will be required. The portable generator may be diesel/ gasoline engine driven. There may be existing electrical power sources within some SST farms with the capacity to supply the temporary electrical power required for all support equipment related to abrasive water jet cutting activities.

- **Process Water (Filtered Raw Water as a Minimum)**

  A small amount of water (500 gal maximum) will be required to service abrasive water jet cutting activities. Process water could be delivered by a tank truck to the new riser installation site. A small

hose would connect the tank truck discharge drain to the suction connection on the abrasive water jet high-pressure water pump. An alternate source of process water will require a temporary 500-gal storage tank near the abrasive water jet high-pressure water pump and a hose connection to an existing controlled water source available on most SST farms. The abrasive water jet high-pressure water pump would draw water through a hose connected to the 500-gal storage tank.

The following steps are required to install a riser using abrasive water jet cutting to gain access through the SST dome.

1. Install a small diameter caisson and monitor soil removal.

2. Lower and install high-pressure abrasive water jet equipment, i.e., spoils collection system, high pressure pump, abrasive supply unit, and possibly CCTV, for monitoring.

3. Attach retention line with an anchor bolt to core section that will be removed.

4. Complete partial cutting of core to approximately 13-in. deep. Partial cutting of the dome will minimize spoil intrusion into the SST.

5. Complete final cutting of core.

6. Recover concrete core, decontaminate, and send to laboratory for testing.

7. Disconnect and remove high pressure abrasive water jet support equipment. Removed components will be surveyed for contamination, and if contaminated, established procedures will be followed for decontamination or proper disposal.

8. Remove high pressure abrasive water jet tracking framework and abrasive water jet cutting head assembly. Removed components will be surveyed for contamination, and if contaminated, established procedures will be followed for decontamination or proper disposal.

Alternative 5: Straddle Crane

Straddle cranes are commonly used for material handling ranging in size from small units used in lumber mills for transporting wood products to large units in ship yards capable of moving large boats. These vehicles have four steerable wheels and are designed to be highly maneuverable and sized to drive over or "straddle" the load to be lifted and transported. Alternative 5 looks at modifying a basic straddle crane by adding specialized equipment for the riser installation.

Straddle cranes are suitable for areas with health physics requirements that require personnel to use respirators during new riser installation and during contact-type construction work. Alternative 5 is described here as partial contact-type construction, but it is adaptable for remote construction as necessary for ALARA radiation or contamination constraints. Equipment configurations are shown in Figures 12 and 13. Equipment size may vary considerably.

Criteria

- **Mobility**

  The riser installation equipment assembly must be transportable between tank farms and maneuverable over the tank dome to circumvent obstructions. The existing large site mobile crane may be used to lift the equipment assembly over tall or congested obstruction. Modifications may be required to the overhead electrical wires and communications cables in the tank farm areas to allow passage of the straddle crane.

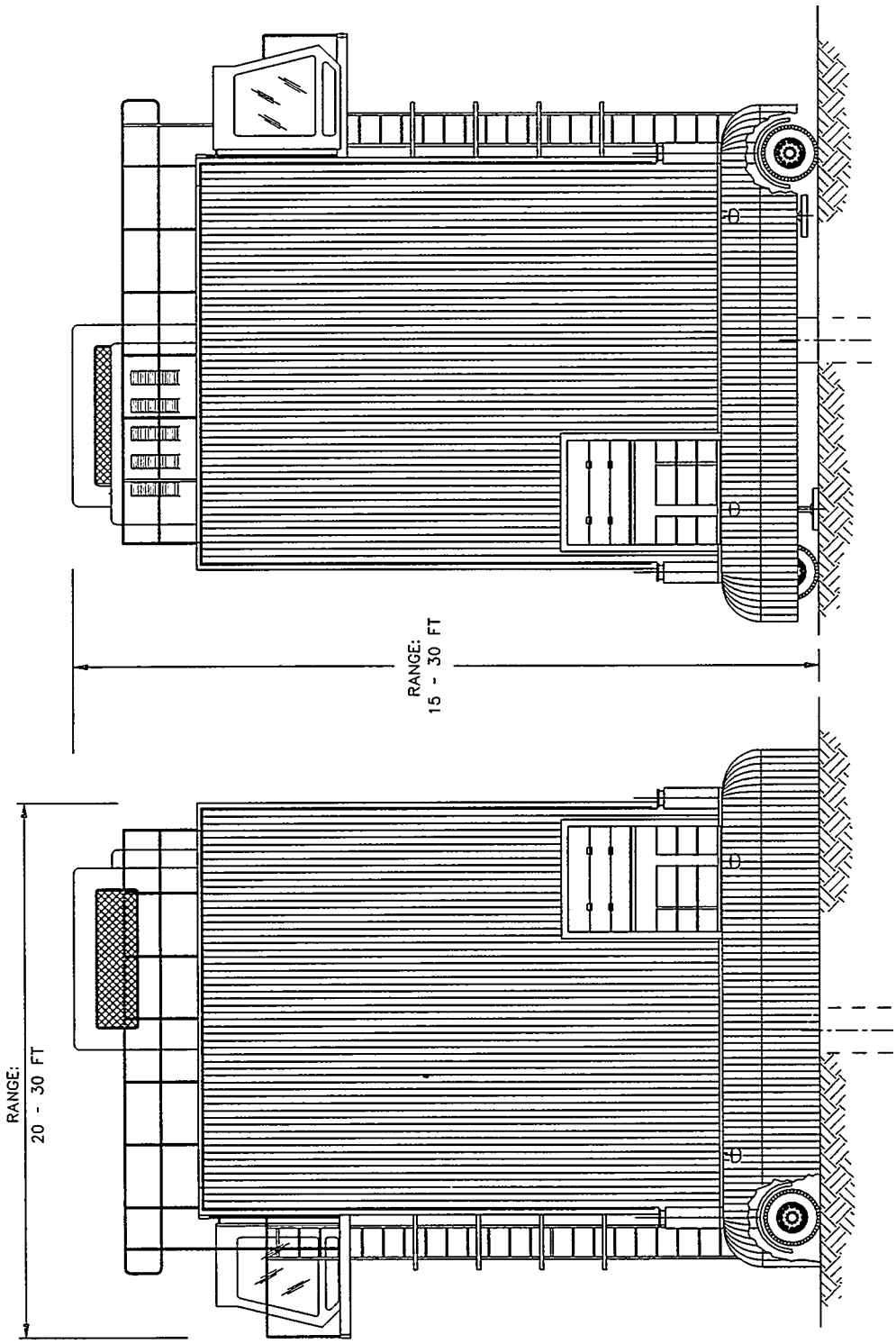

STRADDLE CRANE
(NTS)
FIGURE 12

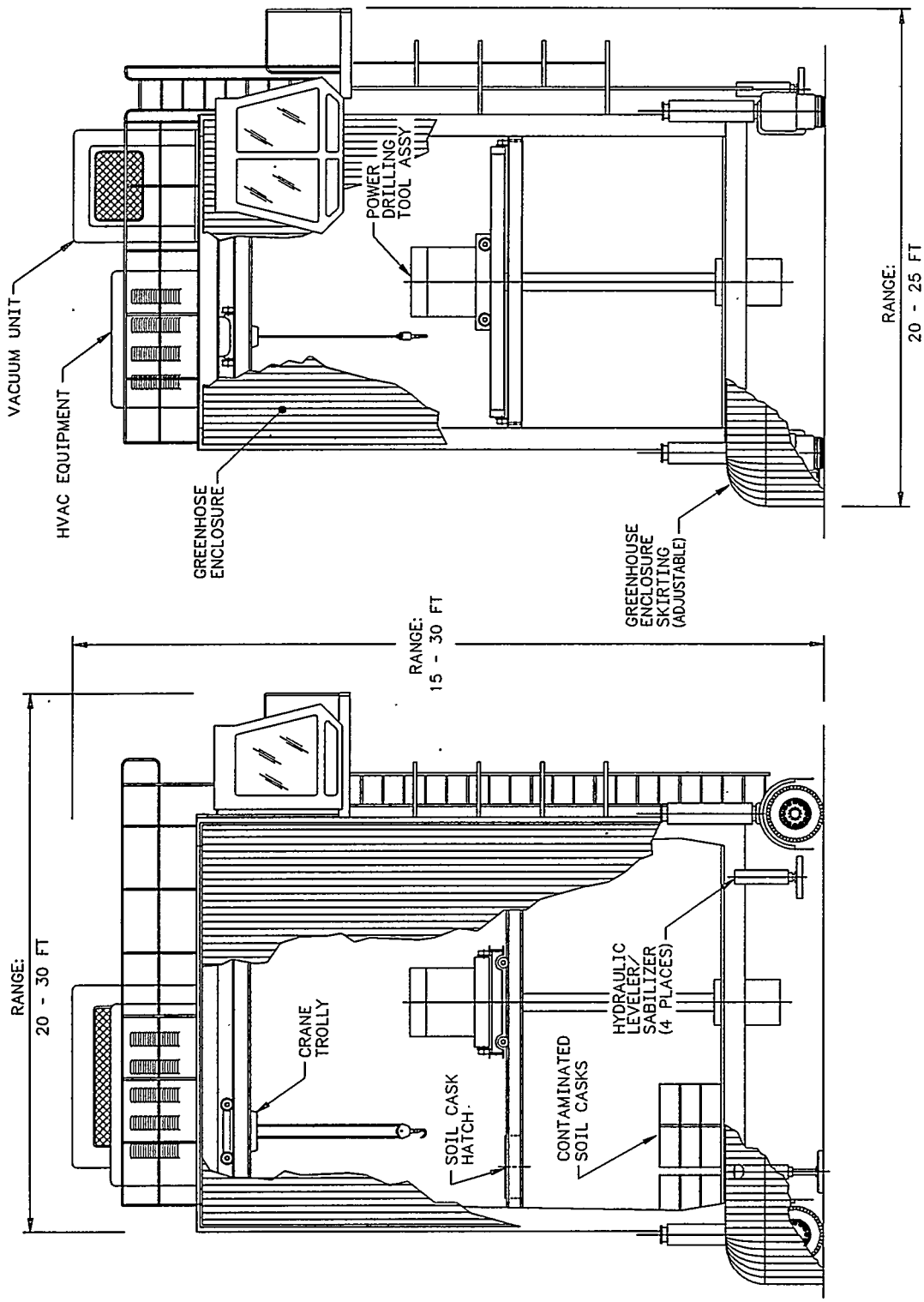

STRADDLE CRANE COMPONENTS

FIGURE 13

- **Recovery System**

  Potentially contaminated soil and debris that has been removed must be put into transportable container approved for contaminated material disposal.

- **Load Distribution**

  Equipment supports must be configured and spaced to ensure that the forces on the underground tank domes will conform with the Operational Safety Requirements (OSR) and provide adequate working space.

- **Riser Location**

  The new risers will be located within a 20-ft radius from the tank center or in other areas deemed necessary by the sampling requirements. The equipment must have leveling and alignment capabilities to install a new riser (see Section III, D).

Straddle Crane

- **Supports**

  Each of the four straddle crane supports has a rotating steerable drive wheel that provides a hydraulic vertical adjustment for leveling the riser installation tooling. Tooling is positioned by steering the wheels to permit the crane to pivot around one wheel, and by traversing the tooling trolley. During the riser preparation and installation operation, each crane leg will have a mechanical stop that provides rigid support.

- **Operator Control Room**

  The operator control cab will be located at the uppermost portion of the crane to maintain the maximum practical distance for ALARA conditions and to have a direct line of sight for riser related

operations. The straddle crane cab provides the necessary equipment controls as well as an enclosed, air-conditioned environment for personnel protection. A slightly positive atmospheric pressure will be maintained by the cab conditioned air supply. When necessary, or practical, to lower personnel radiation exposure, remote CCTV will provide a view of operations. Additional shielding may be required.

- **Work Platform**

  The vertical crane legs support the frame for supports the work platform that traverses in two directions. After the straddle crane is positioned near the new riser location, the crane legs are secured. Configuration of the work platform allows easy installation of the greenhouse to meet the requirements described in Section III B. The work platform is traversed to the desired new riser location and the riser tooling is positioned to remove soil, make an opening in the tank dome, and install the caisson and new riser.

- **Tooling**

  The new riser installation tooling may include a core drilling machine, an abrasive water jet cutting assembly, or similar equipment. The work platform can support several types of new riser installation equipment. Existing drilling tools could be adapted to this work platform. The tooling will provide a plug retrieval arrangement, casing installation, and installation and sealing of the riser to the tank dome.

- **Vacuum System**

  A vacuum system that transports removed material through a cyclone that separates air from solids is mounted on the crane. The solids are deposited into a burial cask located within the crane

greenhouse. The cyclone-monitored clean air discharges through HEPA filters to the atmosphere.

- **HVAC System**

  A crane-mounted, diesel-powered electric generator provides power to the two HVAC units. One HVAC system controls the temperature and pressure in the control cab. Another HVAC unit controls the temperature and pressure inside the greenhouse which includes the space volume within the straddle interior confines. The greenhouse HVAC will maintain a pressure slightly lower than atmospheric pressure.

- **ALARA**

  The crane operators are located at the highest portion of the crane to keep a maximum distance between personnel and the radiation source. The work platform operation would be controlled from the operator control station. In the straddle crane configuration, the enclosure sides and top have greenhouse walls with adjustable lower portions that would contact the soil for isolating the new riser installation operations. This confinement system will be established at setup time from the control cab. During normal operations, vision will not be impaired, but additional CCTV would be practical for safe operation.

D. RISER INSTALLATION

The final step common to all alternatives is the installation of a 12-in. riser in the dome of the tank. The new riser will be constructed using ASTM A 53, Type E or S, Grade B, or ASTM A 106, Grade B, Schedule 40 pipe with an ASTM A 105, ANSI B.16.5, Class 150 slip-on flange welded on one end. Near the other end, a riser collar made of a 1/4-in. thick carbon steel sealing flange will be welded to the new riser pipe near the unflanged end (see Figure 14). This riser collar will support the weight of the riser on the SST dome. A resilient sealing material will stop potential

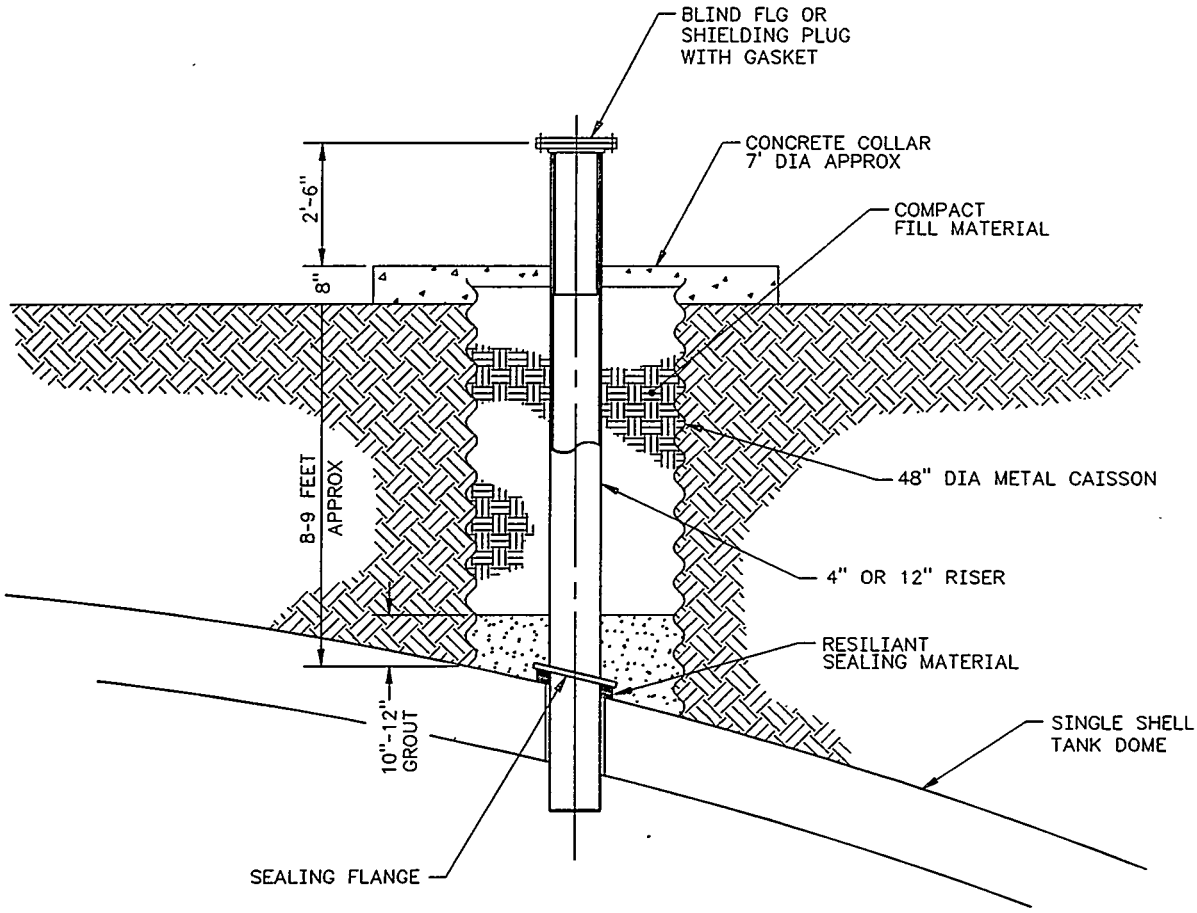

NEW RISER INSTALLATION
IN A CAISSON

FIGURE 14

leakage of concrete grout between the riser collar and the SST dome surface during the placement of grout into the caisson. The design of the new riser assumes no loads will be added to the top riser flange other than a blind flange or a removable shielding plug.

Riser installation will be accomplished in the following sequence for Alternatives 1, 2, and 4.

1. Place the new prefabricated riser assembly in the SST dome penetration.

2. Check riser centerline perpendicularity tolerance as defined on approved design documents.

3. Seal new riser collar to SST dome and the access opening within the walls and pour 10 to 12 in. of vibrated grout in bottom of caisson by the use of a grout pump and tremie pipe.

4. Cure grout according to manufacturer's recommendations.

5. Backfill caisson to grade with materials (noncontaminated) excavated during caisson installation.

6. Install concrete riser pad.

7. Install riser blind flange with gasket or, if required, a shielding plug with gasket on top of riser flange.

Riser installation will be accomplished in the following sequence for Alternatives 3 and 5, rotary drilling or straddle crane (see Figure 15).

1. Place the new prefabricated riser assembly in the SST penetration.

2. Check riser centerline vertical tolerance as defined on approved design documents.

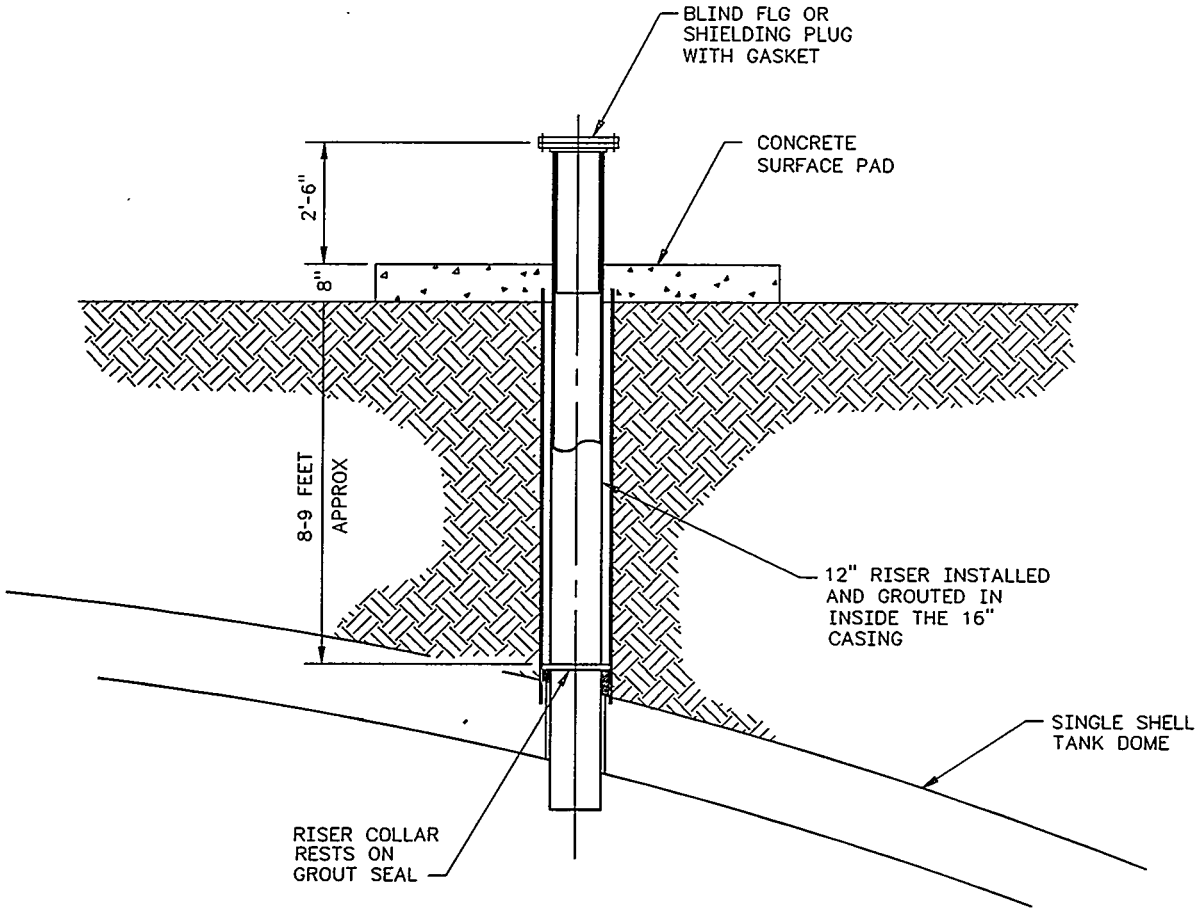

NEW RISER INSTALLATION
IN A CASING

FIGURE 15

3. Seal between riser and casing with grout.

4. Cure grout according to manufacturer's recommendations.

5. Install concrete riser pad.

6. Install riser blind flange with gasket or, if required, a shielding plug with gasket or top riser flange.

E. ENVIRONMENTAL REQUIREMENTS AND PERMITTING

Air Quality

A rotary drilling rig, a portable diamond core drilling machine, or abrasive water jet cutting will be used to drill through the concrete roof of the SSTs to provide a penetration for riser installation. This process will produce a temporary source of airborne radionuclides in the atmosphere of each tank from the new opening. Measures proposed for controlling any release of contaminated atmosphere include maintaining a lower than atmospheric pressure in the tank, HEPA filtration of the drill rig exhaust system, and enclosure of the drilling operation within a ventilated greenhouse.

Air emission regulations pertaining to this work include the following:

- WAC 173-400 describes the requirements for registering hazardous air emissions. WAC 173-460 describes the requirements for new sources of toxic air pollutants and acceptable source impact levels. The application of these regulations will depend on the contents of individual tanks.

- WAC 173-480 requires that emissions will not cause a maximum accumulated dose equivalent of more than 25 mrem/yr of the whole body to any member of the public (i.e., offsite).

- WAC 246-247 requires that the construction, installation, or establishment of a new source subject to WAC 246-247-030 will use the BARCT. According to WHC-CM-7-5, compliance with this regulation requires that work expected to disperse airborne radioactive materials be performed in an enclosure, if possible, with appropriate ventilation. WAC 246-247-050 requires that a source of airborne radionuclide emissions be registered with the Washington State Department of Health.

- Criteria in 40 CFR 61, Subpart H apply to any release point that has the potential to discharge radionuclides into the air, if all pollution control equipment did not exist, in quantities that could cause an effective dose equivalent offsite in excess of 0.1 mrem/yr. An application for approval is not submitted to the EPA Region 10 Administrator if the radionuclide discharge does not exceed this limit.

The operating contractor will prepare any applications for required permits, such as the Radioactive Air Emissions Program and National Emissions Standards for Hazardous Air Pollutants applications, or notifications of construction or modification.

Waste

Excavation or auger drilling will produce soil waste. Auger drilling will produce less volume of soil waste than excavating to the tank surface. The excavated soil will be collected, sampled, and tested to determine the appropriate method of disposal.

WHC-CM-7-5 states that soil containing concentrations of radionuclides in excess of the listed values will be documented and managed as radioactive waste or remediated to below the applicable concentrations.

Excavated soil containing radionuclides may be returned to its original location if the action is consistent with Section 6.0 of WHC-CM-7-5 and ALARA principles, and if the soil is not otherwise regulated as dangerous waste.

Solid waste handling permits are not required for disposal of inert or demolition waste generated and disposed of on the Hanford Site if that waste is in compliance with the applicable WAC 173-304 solid waste handling requirements.

Small quantities of waste water will be produced from drilling or abrasive water jet cutting. This water will be contained within the tank dome grout-sealed casing or caisson until the tank is penetrated. Any water in the core hole will drop into the tank. If the preferred alternative is excavation by hand, no casing or caisson will be used. Some barrier will be needed to prevent any water used to penetrate the tank dome from spreading into the adjacent soil. Soils are contaminated in some tank farms and added water could remobilize contamination.

F. PERMITS AND NEPA DOCUMENTATION

Installation of new risers in SSTs has the potential to discharge pollutants into the air. This will require a determination of whether the NEPA applies and whether air permits are required.

The NEPA requires that an EIS or EA be prepared for the project. Preliminary investigation has determined that an EA should be sufficient. Cost for an EA varies between about $5,000 for a simple case to $120,000 for a complex job. An alternate approach would be to include the new riser installation task in the EIS for the TWRS. This approach would have a 24-month schedule with lower cost to the riser installation task.

Air permits will probably be required. A conservative generic budget would include the cost of one full time equivalent (i.e., one person full time) for 8 months in addition to $100,000 for contracts. The cost will be independent of the method of riser installation.

G. SAFETY REQUIREMENTS

Any work performed over or near the tank farms at Hanford require stringent safety evaluations. Some of the SSTs are watch list tanks which have unresolved safety questions including flammability and organic concerns.

The approach used to determine the safety requirements is to first perform a preliminary screening of unresolved safety questions to determine what additional analysis is necessary. Next, the additional analysis is performed if necessary and safety class of equipment is determined. The final step is to prepare the unresolved safety questions screening and evaluation documentation.

Cost and schedule for these tasks have been estimated to take 4 months with a cost of approximately $45,000.

H. SAFEGUARDS AND SECURITY

DOE Order 5630.1A, "Protection of Departmental Facilities Against Radiological and Toxicological Sabotage," requires that potential impacts of radiological sabotage be considered. A technical report has been prepared to evaluate the risk to the Hanford tank farms for increased adverse impacts to the public and employee health and safety if a postulated radiological sabotage event occurred (ref 11).

The Risk Assessment and Evaluation group of the Security Applications Center, Westinghouse Hanford Company, was contacted to determine the impacts of the riser installation alternatives on the security risk of the tank

farms integrated protection system. The purpose of the review was to identify potential security impacts while installing new risers in SSTs (see Appendix F).

A review of riser installation alternatives indicated the following security impacts:

Alternative 1: Hand Excavate Soil Cover and Safely Slope Overburden

This alternative has the largest potential impact to the protection system, specifically the physical structure, and increases the potential consequences to the employee or public health and safety.

The removal of the earth overburden and the exposure of the tank dome decreases the amount of protection provided by the physical structure. Vehicles or large packages may be easily placed on the tank dome when the excavation is open leading to higher dose rates to onsite and offsite receptors than estimated in the Risk Evaluation of the Tank Farms document.

Alternatives 2 through 5: Caisson or Shoring Alternatives

Alternatives 2 through 5 proposes the use of caisson or shoring to minimize the amount of earth removed. Security and Safeguard review found that the use of an 8 ft or smaller diameter caisson does not remove enough of the overburden to significantly increase the amount of energy to be applied to the tank dome and waste. Current estimated release consequences would be similar and are within acceptable security risk levels.

Conclusion

Alternatives 2 through 5 propose the use of caissons or shoring, 8 ft or less in diameter, to reach the tank dome. Safeguards and Security review

determined that this approach is within acceptable security risk levels for radiological sabotage events.

Use of Alternative 1, which requires a large open excavation, may increase the radiological release and subsequent dose exposures based on the postulated adversary scenario. Certain tanks may require a reevaluation and countermeasures, including earthen berms or highway barriers, to provide additional protection against radiological sabotage events.

I. OPERATING PROCEDURE PREPARATION

Any work over or near the underground storage tanks requires detailed work procedures to ensure that the work is done in the safest manner possible. Work procedures provide direction for the actual riser installation by providing specific step-by-step work instruction.

Cost and schedule for preparing the procedures to ensure new risers are installed in the safest possible manner has been estimated to take approximately 4 months with an estimated cost of $40,000 to develop the first procedure.

IV. IDENTIFICATION OF PREFERRED ALTERNATIVE

A. EVALUATION OF ALTERNATIVES

Criteria developed to evaluate each alternative included radiation exposure considerations (ALARA), availability, cost, safety, schedule, and solid waste generation (see Table 5). A rating of 10 is the highest and a rating of 1 is the lowest. These criteria are listed as follows:

- ALARA: Each alternative was rated for ALARA principles. Methods requiring contact operation that could result in higher potential exposure were rated lower than those using remote operations.

- **Availability:** Each alternative was rated on the availability of equipment and technologies. Hand digging was given a higher rating than straddle crane which would require a long lead time for engineering and procurement of the equipment.

- **Cost:** Total cost of each alternative was rated from 1 to 10 with 1 having the highest cost and 10 having the lowest cost.

- **Safety:** Alternatives that require personnel to enter confined spaces and encounter other hazards were given a lower rating than alternatives developed to minimize workplace hazards.

- **Schedule:** Each alternative was evaluated for the amount of time required to install a new riser. Not included are time to procure equipment, obtain permits, and other preliminary tasks.

- **Solid Waste:** Potential for amounts of solid waste that could be generated determined the rating for this criteria.

TABLE 5

EVALUATION CRITERIA							
Method	ALARA	Availability	Cost	Safety	Schedule	Solid Waste Generation	Total
Assigned Value (Weighing)	5	2	4	5	1	3	
Alternative 1: Hand Excavate Soil Cover and Safely Slope Overburden	1	8	2	6	3	1	65
Alternative 2: Hand Excavate with Shoring or Caisson	2	8	3	5	4	3	76
Alternative 3: Install Risers with Rotary Drilling Equipment	6	7	6	7	8	6	129
Alternative 4: Abrasive Water Jet Cutting for Dome Penetration	6	6	5	8	7	5	124
Alternative 5: Straddle Crane (High Radiation Zone - Noncontact Construction	10	1	1	10	8	6	132

NOTE: Each of the evaluation criteria was assigned a value (weighing) from 1 to 5 with the lowest value being 1 and the highest 5.

Each alternative was rated from 1 to 10 with the lowest rating being 1 and the highest 10 with the exception of cost which rates the lowest cost as 10 and the highest 1.

The rating for each criteria was multiplied by the value.

B. PREFERRED ALTERNATIVE

Ideally, the alternative with the highest total should be the preferred method for installing new risers. Accordingly, ICF KH recommends that the straddle crane system be evaluated further. This study put high values on safety and ALARA principles which gives Alternative 5 the highest rating. This system can be designed to minimize work place safety hazards while installing a riser in a radiation zone. However, the straddle crane system will have the highest initial cost and 2 years is the estimated time to design and procure the equipment.

Alternative 3 has the next highest rating. The results of this study indicates that preparations for riser installation using rotary drilling techniques could be completed in the next 6 to 12 months. Rotary drilling equipment and items such as auger flites and diamond bits are commercially available and techniques for using this equipment for riser installation can be developed. ICF KH recommends planning and conducting demonstration testing to confirm whether this is the preferred alternative.

C. UNCERTAINTIES

The tank dome may not have the structural capacity to support all required dead and live loads. Each tank requiring new risers will require an evaluation to determine if the new riser will compromise the structural capacity.

The amount of reinforcing steel that will be cut when making the dome penetration is uncertain. Drawings for SSTs indicate that the reinforcing steel consists of two layers of 3/4-in. bars spaced at 12 in. on center. This will require at least eight bars will be cut when installing a 12-in. diameter riser. A congested area also occurs between the 5, 10, and 20 ft radius from the tank center where there are two overlapping mats of reinforcing steel. Risers in this location will require at least 16 cut bars.

Alternatives 1 and 2 provide direct access to the tank dome, allowing the dome to be scanned for locating reinforcing steel. Other methods of riser installation, such as rotary drilling, use a small diameter casing which does not allow the tank dome to be scanned for reinforcing steel.

Radiation values over the SSTs have not been sampled or recorded in recent times. Those values could affect the methods employed for the selected alternative.

While this study looked at alternatives for installing a new riser within a 20-ft radius of the tank center similar techniques could be used over the entire tank dome. The only differences are when a new riser is installed farther from the tank center, the depth of excavation to the tank dome increases and the tank dome concrete thickness and amount of reinforcement increases near the tank wall.

V. REFERENCES

A. DOCUMENTS

1. Letter Report, "Single-Shell Tank Riser Configuration," prepared by Kaiser Engineers Hanford Company, Document No. WHC-SD-WM-ER-204, Rev. 0, September 1993.

2. Technical Paper, D.C. Echert and M. Hashish, "Abrasive-Waterjet Deep Kerfing and Waterjet Surface Cleaning for Nuclear Facilities," Journal of Engineering for Industry, August 1989.

3. Monthly Summary Reports, B.M. Hanlon, "Tank Farm Surveillance and Waste Status Summary Report," prepared by Westinghouse Hanford Company, Document No. WHC-EP-0182-XX, 1994.

4. Report, A.T. Alstad, "Riser Configuration Document for Single-Shell Tanks," prepared by Westinghouse Hanford Company, Document No. WHC-SP-RE-TI-053, Rev. 8, September 1991.

5. Engineering Report, "Tank 241-C-106, Penetration Enlargement Sequencing, and Construction Estimate," prepared by ICF Kaiser Hanford Company, Document No. WHC-SD-W340-ER-001, Rev. 0, March 1994.

6. Washington Administrative Codes

WAC 173-304, "Minimum Functional Standards for Solid Waste Handling."

WAC 173-400, "General Regulations for Air Pollution Sources."

WAC 173-460, "Controls for New Sources of Toxic Air Pollutants."

WAC 173-480, "Ambient Air Quality Standards and Emission Limits for Radionuclides."

WAC 246-247, "Radiation Protection - Air Emissions."

7. Westinghouse Hanford Company Manual, WHC-CM-7-5, "Environmental Compliance."

8. Code of Federal Regulations, 40 CFR 61, "National Emission Standards for Hazardous Air Pollutants."

9. Engineering Study, "Tank Penetration Trade Study for 241-C-106," prepared by Westinghouse Hanford Company, Document No. WHC-SD-W139-ES-005, Rev. 0, June 1992.

10. U.S. Department of Energy Order 5630.1A, "Protection of Departmental Facilities Against Radiological and Toxicological Sabotage.

11. Risk Evaluation of the Hanford Tank Farms, Final Technical Report, WHC94-00004(v), April 1994.

B. DRAWINGS

1. H-2-73063, Rev. 3, "Piping Waste Tank Isolation 241-T-107."

2. H-2-73344, Rev. 4, "Piping Waste Tank Isolation Tk 241-C-104."

3. Drawing D6, "Dome Reinforcing Steel for 75 Foot Tanks," CVI File No. 73550, January 10, 1944.

APPENDIX A

Cost Estimates

		Page
Alternative 1:	Hand Excavate Soil Cover and Safety Slope Overburden	
	Low Radiation Area	A-1
	Medium Radiation Area	A-8
	High Radiation Area	A-15
	Low Radiation Area in Congested Tank Farm	A-22
Alternative 2:	Hand Excavate with Shoring	
	Low Radiation Area	A-29
Alternative 2a:	Hand Excavate with Caisson	
	Low Radiation Area	A-36
	Medium Radiation Area	A-43
	High Radiation Area	A-50
Alternative 3:	Install Risers with Rotary Drilling Equipment	
	Low Radiation Area	A-57
	Medium Radiation Area	A-64
	High Radiation Area	A-71
Alternative 4:	Abrasive Water Jet Cutting for Dome Penetration	
	Low Radiation Area	A-78
	Medium Radiation Area	A-85
	High Radiation Area	A-92
Alternative 5:	Straddle Crane	
	Low Radiation Area	A-99
	Medium Radiation Area	A-106
	High Radiation Area	A-113

KAISER ENGINEERS HANFORD
WESTINGHOUSE HANFORD COMPANY
JOB NO. Z198 / ER5511
FILE NO. Z198SCA2

** IEST - INTERACTIVE ESTIMATING **
12" RISER IN S.S. TANKS USING CAISSON EXCAV.
STUDY -ADD 12" RISER TO EXISTING SST- 25mr/NONCONGE
DOE_R01 - PROJECT COST SUMMARY

DATE 08/01/94 08:54:00
BY SMF, DP

COST CODE	DESCRIPTION	ESCALATED TOTAL COST	CONTINGENCY %	CONTINGENCY TOTAL	TOTAL DOLLARS
000	ENGINEERING	4,000	30	1,000	5,000
700	SPECIAL EQUIP/PROCESS SYSTEMS	712,000	30	214,000	926,000
	PROJECT TOTAL	716,000	30	215,000	931,000

TYPE OF ESTIMATE STUDY AUGUST 01, 1994

ARCHITECT ENGINEER For GDC Chris H Brevick

OPERATING CONTRACTOR C. DeFigh-Price 8/10/94

REMARKS:

NO DESIGN OR PROJECT MANAGEMENT IS INCLUDED.

(ROUNDED/ADJUSTED TO THE NEAREST " 1,000 / 10,000 " - PERCENTAGES NOT RECALCULATED TO REFLECT ROUNDING)

KAISER ENGINEERS HANFORD
WESTINGHOUSE HANFORD COMPANY
JOB NO. Z198 / ER5511
FILE NO. Z198SAA2

** IEST - INTERACTIVE ESTIMATING **
12" RISER IN S.S. TANKS USING SLOPED EXCAV.
STUDY-ADD 12" RISERS TO EXISTING SST. 25mr/NONCONGE
DOE_R02 - WORK BREAKDOWN STRUCTURE SUMMARY

DATE 07/27/94 13:31:18
BY SMF, DP

WBS	DESCRIPTION	ESTIMATE SUBTOTAL	ONSITE INDIRECTS	SUB TOTAL	ESCALATION %	ESCALATION TOTAL	SUB TOTAL	CONTINGENCY %	CONTINGENCY TOTAL	TOTAL DOLLARS
121001	ENGINEERING/INSPECTION-ONSITE E/C	3540	0	3540	3.16	112	3652	30	1096	4747
SUBTOTAL 121	ENGINEERING/INSPECTION-ONSI	3540	0	3540	3.16	112	3652	30	1096	4747
SUBTOTAL 1	ENGINEERING	3540	0	3540	3.16	112	3652	30	1096	4747
310031	CPAF BUILD REUSABLE GREENHOUSE	5605	0	5605	3.57	200	5805	30	1741	7546
310032	CPAF FAB GRNHS HVAC & TK EXHAUSTER	342166	0	342166	3.56	12181	354347	30	106304	460651
SUBTOTAL 3100	CPAF ONE TIME CONSTR - SUBT	347771	0	347771	3.56	12381	360152	30	108045	468197
310140	SWP AND SAFETY SUPPORT	54731	0	54731	3.56	1948	56679	30	17004	73683
310141	CPAF MOVE IN/ SETUP	22559	0	22559	3.56	803	23362	30	7009	30371
310151	CPAF HAND EXCAVATE FOR TK RISER	260408	0	260408	3.56	9271	269679	30	80904	350582
310161	CPAF CORE DRILL 12" HOLE IN TK DOME	8552	0	8552	3.55	304	8856	30	2657	11514
310172	CPAF FAB & INSTALL 12" RISER	13628	0	13628	3.57	486	14114	30	4235	18347
310182	BURNOUT	229426	0	229426	3.56	8168	237594	30	71278	308872
SUBTOTAL 3101	CPAF COST EACH TANK - SUBTO	589304	0	589304	3.56	20980	610284	30	183087	793369
SUBTOTAL 31	FA CONST-ONSITE E/C	937075	0	937075	3.56	33361	970436	30	291132	1261566
330051	WHC BURIAL CHARGE	858253	0	858253	0.00	0	858253	30	257476	1115729
SUBTOTAL 33	CONSTRUCTION-O/C	858253	0	858253	0.00	0	858253	30	257476	1115729
SUBTOTAL 3	CONSTRUCTION	1795328	0	1795328	1.86	33361	1828689	30	548608	2377295
PROJECT TOTAL		1,798,868	0	1,798,868	1.86	33,473	1,832,341	30	549,704	2,382,042

1. DOCUMENTS AND DRAWINGS
==========
DOCUMENTS: ENGINEERING STUDY (ISSUE B, MAY 1994)

DRAWINGS: NONE

2. MATERIAL PRICES
==========
UNIT COSTS REPRESENT CURRENT PRICES FOR SPECIFIED MATERIAL.

3. LABOR RATES
==========
CURRENT KEH BASE CRAFT RATES, AS ISSUED BY KEH FINANCE (EFFECTIVE 10-01-93), INCLUDE FRINGE BENEFITS, LABOR INSURANCE, TAXES AND TRAVEL WHERE APPLICABLE, PER HANFORD SITE STABILIZATION AGREEMENT, APPENDIX A (EFFECTIVE 09-06-93). NON CRAFT HOURLY RATES ARE BASED ON THE 1994 FISCAL YEAR BUDGET LIQUIDATION RATES AS ISSUED BY KEH FINANCE (EFFECTIVE 10-01-93).

4. GENERAL REQUIREMENTS/TECHNICAL SERVICES/OVERHEADS
==========
A.) ONSITE CONSTRUCTION FORCES GENERAL REQUIREMENTS, TECHNICAL SERVICES AND CRAFT OVERHEAD COSTS ARE INCLUDED AS A COMPOSITE PERCENTAGE BASED ON THE KEH ESTIMATING FACTOR/BILLING SCHEDULE, REVISION 16, DATED OCTOBER 01, 1993. THE TOTAL COMPOSITE PERCENTAGE APPLIED TO ONSITE CONSTRUCTION FORCES LABOR, FOR THIS PROJECT, IS 94% FOR SHOP WORK AND 136% FOR FIELD WORK, WHICH IS REFLECTED IN THE "OH&P/B&I" COLUMN OF THE ESTIMATE DETAIL.
B.) ONSITE CONTRACT ADMINISTRATION AND CONSTRUCTION MANAGEMENT COSTS, ASSOCIATED WITH THE OVERALL MANAGEMENT OF THE FIXED PRICE CONTRACTS, ARE INCLUDED AS A COMPOSITE PERCENTAGE AND LUMP SUM ALLOWANCE (FOR BID PACKAGE PREP) BASED ON THE ESTIMATING FACTOR/BILLING SCHEDULE. THE TOTAL COMPOSITE PERCENTAGE AND LUMP SUM ALLOWANCE ARE APPLIED AGAINST THE TOTAL FIXED PRICE CONTRACT AMOUNT WHICH IS REFLECTED ON THE KEH SUMMARY REPORT DOER07, INCLUDED WITH THIS ESTIMATE. (FINAL ESTIMATES MAY BE PARTIALLY MANLOADED AND INCLUDED WITHIN THE ESTIMATE DETAIL)

5. ESCALATION
==========
ESCALATION PERCENTAGES WERE CALCULATED BY THE HANFORD MATERIAL & LABOR ESCALATION STUDY, DATED FEBRUARY 1994. ESCALATION WAS CALULATED WITH JUNE 1994 RATES.

6. ROUNDING
==========
U.S. DEPARTMENT OF ENERGY - DOE ORDER 5100.4 PAGE I-32 SUBPARAGRAPH (M), REQUIRES ROUNDING OF ALL GENERAL PLANT PROJECTS (GPP'S) AND LINE ITEM (LI) COST ESTIMATES. REFERENCE: DOE 5100.4, FIGURE I-11, DATED 10-31-84.

7. REMARKS
==========
A.) ALL CONSTRUCTION IS ESTIMATED AS BY CPAF. E. & I. IS BY CPAF.
B.) NO DESIGN, PROJECT MANAGEMENT, OR WHC PROJECT MANAGEMENT IS INCLUDED.
C.) ALL EXCAVATED DIRT IS BARRELLED & REPLACED.
D.) NO ESCALATION IS APPLIED TO WBS 33 (WASTE BURIAL CHARGE) AS THE COST PER CUBIC FOOT ($173) COMES FROM THE 5 YEAR PROJECTION.

KAISER ENGINEERS HANFORD
WESTINGHOUSE HANFORD COMPANY
JOB NO. Z198 / ER5511
FILE NO. Z198SAA2

** IEST - INTERACTIVE ESTIMATING **
12" RISER IN S.S. TANKS USING SLOPED EXCAV.
STUDY-ADD 12" RISERS TO EXISTING SST. 25mr/NONCONGE
DOE_R04 - COST CODE ACCOUNT SUMMARY

DATE 07/27/94 13:31:24
BY SMF, DP

COST CODE/WBS	DESCRIPTION	ESTIMATE SUBTOTAL	ONSITE INDIRECTS	SUB TOTAL	ESCALATION %	ESCALATION TOTAL	SUB TOTAL	CONTINGENCY %	CONTINGENCY TOTAL	TOTAL DOLLARS
000	ENGINEERING									
121001	ENGINEERING/INSPECTION-ONSITE E/C	3540	0	3540	3.16	112	3652	30	1096	4747
TOTAL 000	ENGINEERING	3540	0	3540	3.16	112	3652	30	1096	4747
700	SPECIAL EQUIP/PROCESS SYSTEMS									
310031	CPAF BUILD REUSABLE GREENHOUSE	5605	0	5605	3.57	200	5805	30	1741	7546
310032	CPAF FAB GRNHS HVAC & TK EXHAUSTER	342166	0	342166	3.56	12181	354347	30	106304	460651
310140	SWP AND SAFETY SUPPORT	54731	0	54731	3.56	1948	56679	30	17004	73683
310141	CPAF MOVE IN/ SETUP	22559	0	22559	3.56	803	23362	30	7009	30371
310151	CPAF HAND EXCAVATE FOR TK RISER	260408	0	260408	3.56	9271	269679	30	80904	350582
310161	CPAF CORE DRILL 12" HOLE IN TK DOME	8552	0	8552	3.55	304	8856	30	2657	11514
310172	CPAF FAB & INSTALL 12" RISER	13628	0	13628	3.57	486	14114	30	4235	18347
310182	BURNOUT	229426	0	229426	3.56	8168	237594	30	71278	308872
330051	WHC BURIAL CHARGE	858253	0	858253	0.00	0	858253	30	257476	1115729
TOTAL 700	SPECIAL EQUIP/PROCESS SYSTEM	1795328	0	1795328	1.86	33361	1828689	30	548608	2377295
PROJECT TOTAL		1,798,868	0	1,798,868	1.86	33,473	1,832,341	30	549,704	2,382,042

KAISER ENGINEERS HANFORD
WESTINGHOUSE HANFORD COMPANY
JOB NO. Z198 / ER5511
FILE NO. Z198SAA2

** IEST - INTERACTIVE ESTIMATING **
12" RISER IN S.S. TANKS USING SLOPED EXCAV.
STUDY-ADD 12" RISERS TO EXISTING SST. 25mr/NONCONGE
DOE_R05 - ESTIMATE SUMMARY BY CSI DIVISION

DATE 07/27/94 13:31:28
BY SMF, DP

CSI	DESCRIPTION	ESTIMATE SUBTOTAL	ONSITE INDIRECTS	SUB TOTAL	ESCALATION %	ESCALATION TOTAL	SUB TOTAL	CONTINGENCY %	CONTINGENCY TOTAL	TOTAL DOLLARS
	ENGINEERING									
00	TECHNICAL SERVICES	3540	0	3540	3.16	112	3652	30	1096	4747
	TOTAL ENGINEERING	3,540	0	3,540	3.16	112	3,652	30	1,096	4,747
	CONSTRUCTION									
02	SITEWORK	1439829	0	1439829	1.44	20705	1460534	30	438161	1898694
03	CONCRETE	2861	0	2861	3.57	102	2963	30	889	3852
15	MECHANICAL	352638	0	352638	3.56	12554	365192	30	109558	474749
	TOTAL CONSTRUCTION	1,795,328	0	1,795,328	1.86	33,361	1,828,689	30	548,608	2,377,295
	PROJECT TOTAL	1,798,868	0	1,798,868	1.86	33,473	1,832,341	30	549,704	2,382,042

REFERENCE: ESTIMATE BASIS SHEET PAGE 3 OF 7
COST CODE ACCOUNT SUMMARY PAGE 4 OF 7

THE U.S. DEPARTMENT OF ENERGY - RICHLAND ORDER 5700.3 "COST ESTIMATING, ANALYSIS AND STANDARDIZATION" DATED 3-27-85, PROVIDES GUIDELINES FOR ESTIMATE CONTINGENCIES. THE GUIDELINE FOR A STUDY ESTIMATE SHOULD HAVE AN OVERALL RANGE OF 20 TO 30% .

CONTINGENCY IS EVALUATED AT THE THIRD COST CODE LEVEL AND SUMMARIZED AT THE PRIMARY AND SECONDARY COST CODE LEVEL OF THE DETAILED COST ESTIMATE.

000 ENGINEERING

121001	ENGINEERING/INSPECTION-ONSITE E/C	30%	CONTINGENCY WAS ADDED AS INSPECTION WILL HAVE SAME PROBLEMS AS CONSTRUCTION

AVERAGE ENGINEERING CONTINGENCY 30%

700 SPECIAL EQUIP/PROCESS SYSTEMS

310031	CPAF BUILD REUSABLE GREENHOUSE	30%	CONTINGENCY WAS ADDED AS DESIGN OF GREENHOUSE COULD VARY
310032	CPAF FAB GRNHS HVAC & TK EXHAUSTER	30	CONTINGENCY WAS ADDED AS SPECIFICATIONS FOR HVAC EQUIPMENT WILL CHANGE
310140	SWP AND SAFETY SUPPORT	30	CONTINGENCY WAS ADDED AS EXACT METHOD AND SCOPE OF WORK EXPECTED IS NOT KNOWN
310141	CPAF MOVE IN/ SETUP	30	CONTINGENCY WAS ADDED AS EXACT METHOD AND SCOPE OF WORK EXPECTED IS NOT KNOWN
310151	CPAF HAND EXCAVATE FOR TK RISER	30	CONTINGENCY WAS ADDED AS EXACT METHOD AND SCOPE OF WORK EXPECTED IS NOT KNOWN
310161	CPAF CORE DRILL 12" HOLE IN TK DOME	30	CONTINGENCY WAS ADDED AS EXACT METHOD AND SCOPE OF WORK EXPECTED IS NOT KNOWN
310172	CPAF FAB & INSTALL 12" RISER	30	CONTINGENCY WAS ADDED AS EXACT METHOD AND SCOPE OF WORK EXPECTED IS NOT KNOWN
310182	BURNOUT	30	CONTINGENCY WAS ADDED AS EXACT METHOD AND SCOPE OF WORK EXPECTED IS NOT KNOWN
330051	WHC BURIAL CHARGE	30	CONTINGENCY WAS ADDED AS EXACT METHOD AND SCOPE OF WORK EXPECTED IS NOT KNOWN

TOTAL 700 SPECIAL EQUIP/PROCESS SYSTEM 30

AVERAGE CONSTRUCTION CONTINGENCY 30%

AVERAGE PROJECT CONTINGENCY 30%

KAISER ENGINEERS HANFORD
WESTINGHOUSE HANFORD COMPANY
JOB NO. Z198 / ER5511
FILE NO. Z198SAA2

** IEST - INTERACTIVE ESTIMATING **
12" RISER IN S.S. TANKS USING SLOPED EXCAV.
STUDY-ADD 12" RISERS TO EXISTING SST. 25mr/NONCONGE
DOE_R07 - ONSITE INDIRECT COSTS BY WBS

DATE 07/27/94 13:31:32
BY SMF, DP

WBS	DESCRIPTION	ESTIMATE SUBTOTAL	CONTRACT %	ADMINISTRATION TOTAL	BID PACK PREP.	OTHER INDIRECTS	TOTAL INDIRECTS
121001	ENGINEERING/INSPECTION-ONSITE E/C	3540	0.00	0	0	0	0
310031	CPAF BUILD REUSABLE GREENHOUSE	5605	0.00	0	0	0	0
310032	CPAF FAB GRNHS HVAC & TK EXHAUSTER	342166	0.00	0	0	0	0
310140	SWP AND SAFETY SUPPORT	54731	0.00	0	0	0	0
310141	CPAF MOVE IN/ SETUP	22559	0.00	0	0	0	0
310151	CPAF HAND EXCAVATE FOR TK RISER	260408	0.00	0	0	0	0
310161	CPAF CORE DRILL 12" HOLE IN TK DOME	8552	0.00	0	0	0	0
310172	CPAF FAB & INSTALL 12" RISER	13628	0.00	0	0	0	0
310182	BURNOUT	229426	0.00	0	0	0	0
330051	WHC BURIAL CHARGE	858253	0.00	0	0	0	0
	PROJECT TOTAL	1,798,868		0	0	0	0

KAISER ENGINEERS HANFORD
WESTINGHOUSE HANFORD COMPANY
JOB NO. Z198 / ER5511
FILE NO. Z198SAA2

** IEST - INTERACTIVE ESTIMATING **
12" RISER IN S.S. TANKS USING SLOPED EXCAV.
STUDY-ADD 12" RISERS TO EXISTING SST. 25mr/NONCONGE
DOE_R01 - PROJECT COST SUMMARY

DATE 07/27/94 13:31:09
BY SMF, DP

COST CODE	DESCRIPTION	ESCALATED TOTAL COST	CONTINGENCY %	CONTINGENCY TOTAL	TOTAL DOLLARS
000	ENGINEERING	4,000	30	1,000	5,000
700	SPECIAL EQUIP/PROCESS SYSTEMS	1,829,000	30	549,000	2,378,000
	PROJECT TOTAL	1,833,000	30	550,000	2,383,000

TYPE OF ESTIMATE STUDY JULY 27, 1994

ARCHITECT ENGINEER G Chadwick Chris H Brevick

OPERATING CONTRACTOR C. DeFigh-Price 8/10/94

REMARKS:

NO DESIGN OR PROJECT MANAGEMENT IS INCLUDED.

(ROUNDED/ADJUSTED TO THE NEAREST " 1,000 / 10,000 " - PERCENTAGES NOT RECALCULATED TO REFLECT ROUNDING)

KAISER ENGINEERS HANFORD
WESTINGHOUSE HANFORD COMPANY
JOB NO. Z198 / ER5511
FILE NO. Z198SAB2

** IEST - INTERACTIVE ESTIMATING **
12" RISER IN S.S. TANKS USING SLOPED EXCAV.
STUDY-ADD 12" RISERS TO EXISTING SST.100mr/NONCONGE
DOE_R02 - WORK BREAKDOWN STRUCTURE SUMMARY

DATE 07/29/94 09:10:45
BY SMF, DP

WBS	DESCRIPTION	ESTIMATE SUBTOTAL	ONSITE INDIRECTS	SUB TOTAL	ESCALATION %	ESCALATION TOTAL	SUB TOTAL	CONTINGENCY %	CONTINGENCY TOTAL	TOTAL DOLLARS
121001	ENGINEERING/INSPECTION-ONSITE E/C	3540	0	3540	3.16	112	3652	30	1096	4747
SUBTOTAL 121	ENGINEERING/INSPECTION-ONSI	3540	0	3540	3.16	112	3652	30	1096	4747
SUBTOTAL 1	ENGINEERING	3540	0	3540	3.16	112	3652	30	1096	4747
310031	CPAF BUILD REUSABLE GREENHOUSE	5605	0	5605	3.57	200	5805	30	1741	7546
310032	CPAF FAB GRNHS HVAC & TK EXHAUSTER	342166	0	342166	3.56	12181	354347	30	106304	460651
SUBTOTAL 3100	CPAF ONE TIME CONSTR - SUBT	347771	0	347771	3.56	12381	360152	30	108045	468197
310140	SWP AND SAFETY SUPPORT	54731	0	54731	3.56	1948	56679	30	17004	73683
310141	CPAF MOVE IN/ SETUP	22559	0	22559	3.56	803	23362	30	7009	30371
310151	CPAF HAND EXCAVATE FOR TK RISER	260408	0	260408	3.56	9271	269679	30	80904	350582
310161	CPAF CORE DRILL 12" HOLE IN TK DOME	8552	0	8552	3.55	304	8856	30	2657	11514
310172	CPAF FAB & INSTALL 12" RISER	13628	0	13628	3.57	486	14114	30	4235	18347
310182	BURNOUT	1185171	0	1185171	3.56	42192	1227363	30	368209	1595572
SUBTOTAL 3101	CPAF COST EACH TANK - SUBTO	1545049	0	1545049	3.56	55004	1600053	30	480018	2080069
SUBTOTAL 31	FA CONST-ONSITE E/C	1892820	0	1892820	3.56	67385	1960205	30	588063	2548266
330051	WHC BURIAL CHARGE	858253	0	858253	0.00	0	858253	30	257476	1115729
SUBTOTAL 33	CONSTRUCTION-O/C	858253	0	858253	0.00	0	858253	30	257476	1115729
SUBTOTAL 3	CONSTRUCTION	2751073	0	2751073	2.45	67385	2818458	30	845539	3663995
PROJECT TOTAL		2,754,613	0	2,754,613	2.45	67,497	2,822,110	30	846,635	3,668,742

1. DOCUMENTS AND DRAWINGS

DOCUMENTS: ENGINEERING STUDY (ISSUE B, MAY 1994)

DRAWINGS: NONE

2. MATERIAL PRICES

UNIT COSTS REPRESENT CURRENT PRICES FOR SPECIFIED MATERIAL.

3. LABOR RATES

CURRENT KEH BASE CRAFT RATES, AS ISSUED BY KEH FINANCE (EFFECTIVE 10-01-93), INCLUDE FRINGE BENEFITS, LABOR INSURANCE, TAXES AND TRAVEL WHERE APPLICABLE, PER HANFORD SITE STABILIZATION AGREEMENT, APPENDIX A (EFFECTIVE 09-06-93). NON CRAFT HOURLY RATES ARE BASED ON THE 1994 FISCAL YEAR BUDGET LIQUIDATION RATES AS ISSUED BY KEH FINANCE (EFFECTIVE 10-01-93).

4. GENERAL REQUIREMENTS/TECHNICAL SERVICES/OVERHEADS

A.) ONSITE CONSTRUCTION FORCES GENERAL REQUIREMENTS, TECHNICAL SERVICES AND CRAFT OVERHEAD COSTS ARE INCLUDED AS A COMPOSITE PERCENTAGE BASED ON THE KEH ESTIMATING FACTOR/BILLING SCHEDULE, REVISION 16, DATED OCTOBER 01, 1993. THE TOTAL COMPOSITE PERCENTAGE APPLIED TO ONSITE CONSTRUCTION FORCES LABOR, FOR THIS PROJECT, IS 94% FOR SHOP WORK AND 136% FOR FIELD WORK, WHICH IS REFLECTED IN THE "OH&P/B&I" COLUMN OF THE ESTIMATE DETAIL.

B.) ONSITE CONTRACT ADMINISTRATION AND CONSTRUCTION MANAGEMENT COSTS, ASSOCIATED WITH THE OVERALL MANAGEMENT OF THE FIXED PRICE CONTRACTS, ARE INCLUDED AS A COMPOSITE PERCENTAGE AND LUMP SUM ALLOWANCE (FOR BID PACKAGE PREP) BASED ON THE ESTIMATING FACTOR/BILLING SCHEDULE. THE TOTAL COMPOSITE PERCENTAGE AND LUMP SUM ALLOWANCE ARE APPLIED AGAINST THE TOTAL FIXED PRICE CONTRACT AMOUNT WHICH IS REFLECTED ON THE KEH SUMMARY REPORT DOER07, INCLUDED WITH THIS ESTIMATE. (FINAL ESTIMATES MAY BE PARTIALLY MANLOADED AND INCLUDED WITHIN THE ESTIMATE DETAIL)

5. ESCALATION

ESCALATION PERCENTAGES WERE CALCULATED BY THE HANFORD MATERIAL & LABOR ESCALATION STUDY, DATED FEBRUARY 1994. ESCALATION HAS BEEN CALCULATED USING JUNE 1994 RATES.

6. ROUNDING

U.S. DEPARTMENT OF ENERGY - DOE ORDER 5100.4 PAGE I-32 SUBPARAGRAPH (M), REQUIRES ROUNDING OF ALL GENERAL PLANT PROJECTS (GPP'S) AND LINE ITEM (LI) COST ESTIMATES. REFERENCE: DOE 5100.4, FIGURE I-11, DATED 10-31-84.

7. REMARKS

A.) ALL CONSTRUCTION IS ESTIMATED AS BY CPAF. E. & I. IS BY CPAF.
B.) NO DESIGN, PROJECT MANAGEMENT, OR WHC PROJECT MANAGEMENT IS INCLUDED.
C.) ALL EXCAVATED DIRT IS BARRELLED & REPLACED.
D.) NO ESCALATION IS APPLIED TO WBS 33 (WASTE BURIAL CHARGE) AS THE COST PER CUBIC FOOT ($173) COMES FROM THE 5 YEAR PROJECTION.

KAISER ENGINEERS HANFORD
WESTINGHOUSE HANFORD COMPANY
JOB NO. Z198 / ER5511
FILE NO. Z198SAB2

** IEST - INTERACTIVE ESTIMATING **
12" RISER IN S.S. TANKS USING SLOPED EXCAV.
STUDY-ADD 12" RISERS TO EXISTING SST.100mr/NONCONGE
DOE_R04 - COST CODE ACCOUNT SUMMARY

DATE 07/29/94 09:10:50
BY SMF, DP

COST CODE/WBS	DESCRIPTION	ESTIMATE SUBTOTAL	ONSITE INDIRECTS	SUB TOTAL	ESCALATION %	ESCALATION TOTAL	SUB TOTAL	CONTINGENCY %	CONTINGENCY TOTAL	TOTAL DOLLARS
000	ENGINEERING									
121001	ENGINEERING/INSPECTION-ONSITE E/C	3540	0	3540	3.16	112	3652	30	1096	4747
TOTAL 000	ENGINEERING	3540	0	3540	3.16	112	3652	30	1096	4747
700	SPECIAL EQUIP/PROCESS SYSTEMS									
310031	CPAF BUILD REUSABLE GREENHOUSE	5605	0	5605	3.57	200	5805	30	1741	7546
310032	CPAF FAB GRNHS HVAC & TK EXHAUSTER	342166	0	342166	3.56	12181	354347	30	106304	460651
310140	SWP AND SAFETY SUPPORT	54731	0	54731	3.56	1948	56679	30	17004	73683
310141	CPAF MOVE IN/ SETUP	22559	0	22559	3.56	803	23362	30	7009	30371
310151	CPAF HAND EXCAVATE FOR TK RISER	260408	0	260408	3.56	9271	269679	30	80904	350582
310161	CPAF CORE DRILL 12" HOLE IN TK DOME	8552	0	8552	3.55	304	8856	30	2657	11514
310172	CPAF FAB & INSTALL 12" RISER	13628	0	13628	3.57	486	14114	30	4235	18347
310182	BURNOUT	1185171	0	1185171	3.56	42192	1227363	30	368209	1595572
330051	WHC BURIAL CHARGE	858253	0	858253	0.00	0	858253	30	257476	1115729
TOTAL 700	SPECIAL EQUIP/PROCESS SYSTEM	2751073	0	2751073	2.45	67385	2818458	30	845539	3663995
PROJECT TOTAL		2,754,613	0	2,754,613	2.45	67,497	2,822,110	30	846,635	3,668,742

CSI	DESCRIPTION	ESTIMATE SUBTOTAL	ONSITE INDIRECTS	SUB TOTAL	ESCALATION %	ESCALATION TOTAL	SUB TOTAL	CONTINGENCY %	CONTINGENCY TOTAL	TOTAL DOLLARS
ENGINEERING										
00	TECHNICAL SERVICES	3540	0	3540	3.16	112	3652	30	1096	4747
	TOTAL ENGINEERING	3,540	0	3,540	3.16	112	3,652	30	1,096	4,747
CONSTRUCTION										
02	SITEWORK	2395574	0	2395574	2.28	54729	2450303	30	735092	3185394
03	CONCRETE	2861	0	2861	3.57	102	2963	30	889	3852
15	MECHANICAL	352638	0	352638	3.56	12554	365192	30	109558	474749
	TOTAL CONSTRUCTION	2,751,073	0	2,751,073	2.45	67,385	2,818,458	30	845,539	3,663,995
	PROJECT TOTAL	2,754,613	0	2,754,613	2.45	67,497	2,822,110	30	846,635	3,668,742

REFERENCE: ESTIMATE BASIS SHEET — PAGE 3 OF 7
COST CODE ACCOUNT SUMMARY — PAGE 4 OF 7

THE U.S. DEPARTMENT OF ENERGY - RICHLAND ORDER 5700.3 "COST ESTIMATING, ANALYSIS AND STANDARDIZATION" DATED 3-27-85, PROVIDES GUIDELINES FOR ESTIMATE CONTINGENCIES. THE GUIDELINE FOR A STUDY ESTIMATE SHOULD HAVE AN OVERALL RANGE OF 20 TO 30% .

CONTINGENCY IS EVALUATED AT THE THIRD COST CODE LEVEL AND SUMMARIZED AT THE PRIMARY AND SECONDARY COST CODE LEVEL OF THE DETAILED COST ESTIMATE.

000 ENGINEERING

121001	ENGINEERING/INSPECTION-ONSITE E/C	30%	CONTINGENCY WAS ADDED AS INSPECTION WILL HAVE SAME PROBLEMS AS CONSTRUCTION

AVERAGE ENGINEERING CONTINGENCY 30%

700 SPECIAL EQUIP/PROCESS SYSTEMS

310031	CPAF BUILD REUSABLE GREENHOUSE	30%	CONTINGENCY WAS ADDED AS DESIGN OF GREENHOUSE COULD VARY
310032	CPAF FAB GRNHS HVAC & TK EXHAUSTER	30	CONTINGENCY WAS ADDED AS SPECIFICATIONS FOR HVAC EQUIPMENT WILL CHANGE
310140	SWP AND SAFETY SUPPORT	30	CONTINGENCY WAS ADDED AS EXACT METHOD AND SCOPE OF WORK EXPECTED IS NOT KNOWN
310141	CPAF MOVE IN/ SETUP	30	CONTINGENCY WAS ADDED AS EXACT METHOD AND SCOPE OF WORK EXPECTED IS NOT KNOWN
310151	CPAF HAND EXCAVATE FOR TK RISER	30	CONTINGENCY WAS ADDED AS EXACT METHOD AND SCOPE OF WORK EXPECTED IS NOT KNOWN
310161	CPAF CORE DRILL 12" HOLE IN TK DOME	30	CONTINGENCY WAS ADDED AS EXACT METHOD AND SCOPE OF WORK EXPECTED IS NOT KNOWN
310172	CPAF FAB & INSTALL 12" RISER	30	CONTINGENCY WAS ADDED AS EXACT METHOD AND SCOPE OF WORK EXPECTED IS NOT KNOWN
310182	BURNOUT	30	CONTINGENCY WAS ADDED AS EXACT METHOD AND SCOPE OF WORK EXPECTED IS NOT KNOWN
330051	WHC BURIAL CHARGE	30	CONTINGENCY WAS ADDED AS EXACT METHOD AND SCOPE OF WORK EXPECTED IS NOT KNOWN

TOTAL 700 SPECIAL EQUIP/PROCESS SYSTEM 30

AVERAGE CONSTRUCTION CONTINGENCY 30%

AVERAGE PROJECT CONTINGENCY 30%

KAISER ENGINEERS HANFORD
WESTINGHOUSE HANFORD COMPANY
JOB NO. Z198 / ER5511
FILE NO. Z198SAB2

** IEST - INTERACTIVE ESTIMATING **
12" RISER IN S.S. TANKS USING SLOPED EXCAV.
STUDY-ADD 12" RISERS TO EXISTING SST.100mr/NONCONGE
DOE_R07 - ONSITE INDIRECT COSTS BY WBS

DATE 07/29/94 09:10:59
BY SMF, DP

WBS	DESCRIPTION	ESTIMATE SUBTOTAL	CONTRACT %	ADMINISTRATION TOTAL	BID PACK PREP.	OTHER INDIRECTS	TOTAL INDIRECTS
121001	ENGINEERING/INSPECTION-ONSITE E/C	3540	0.00	0	0	0	0
310031	CPAF BUILD REUSABLE GREENHOUSE	5605	0.00	0	0	0	0
310032	CPAF FAB GRNHS HVAC & TK EXHAUSTER	342166	0.00	0	0	0	0
310140	SWP AND SAFETY SUPPORT	54731	0.00	0	0	0	0
310141	CPAF MOVE IN/ SETUP	22559	0.00	0	0	0	0
310151	CPAF HAND EXCAVATE FOR TK RISER	260408	0.00	0	0	0	0
310161	CPAF CORE DRILL 12" HOLE IN TK DOME	8552	0.00	0	0	0	0
310172	CPAF FAB & INSTALL 12" RISER	13628	0.00	0	0	0	0
310182	BURNOUT	1185171	0.00	0	0	0	0
330051	WHC BURIAL CHARGE	858253	0.00	0	0	0	0
	PROJECT TOTAL	2,754,613		0	0	0	0

KAISER ENGINEERS HANFORD
WESTINGHOUSE HANFORD COMPANY
JOB NO. Z198 / ER5511
FILE NO. Z198SBA2

** IEST - INTERACTIVE ESTIMATING **
NEW 12" RISER IN S.S. TANKS USING SHORED EXCAV.
STUDY -ADD 12" RISER TO EXIST. SST -25mr/NONCONGEST
DOE_R01 - PROJECT COST SUMMARY

DATE 07/27/94 14:30:31
BY SMF/DP

COST CODE	DESCRIPTION	ESCALATED TOTAL COST	CONTINGENCY %	CONTINGENCY TOTAL	TOTAL DOLLARS
000	ENGINEERING	4,000	30	1,000	5,000
700	SPECIAL EQUIP/PROCESS SYSTEMS	1,028,000	30	308,000	1,336,000
	PROJECT TOTAL	1,032,000	30	309,000	1,341,000

TYPE OF ESTIMATE STUDY JULY 27, 1994

ARCHITECT ENGINEER G. Chadwick Chris H Brewick

OPERATING CONTRACTOR C. DeFigh-Price 8/10/94

REMARKS:

NO DESIGN OR PROJECT MANAGEMENT IS INCLUDED.

(ROUNDED/ADJUSTED TO THE NEAREST " 1,000 / 10,000 " - PERCENTAGES NOT RECALCULATED TO REFLECT ROUNDING)

KAISER ENGINEERS HANFORD
WESTINGHOUSE HANFORD COMPANY
JOB NO. Z198 / ER5511
FILE NO. Z198SAC2

** IEST - INTERACTIVE ESTIMATING **
12" RISER IN S.S. TANKS USING SLOPED EXCAV.
STUDY-ADD 12" RISERS TO EXISTING SST.500mr/NONCONGE
DOE_R02 - WORK BREAKDOWN STRUCTURE SUMMARY

DATE 07/29/94 10:48:19
BY SMF, DP

WBS	DESCRIPTION	ESTIMATE SUBTOTAL	ONSITE INDIRECTS	SUB TOTAL	ESCALATION %	ESCALATION TOTAL	SUB TOTAL	CONTINGENCY %	CONTINGENCY TOTAL	TOTAL DOLLARS
121001	ENGINEERING/INSPECTION-ONSITE E/C	3540	0	3540	3.16	112	3652	30	1096	4747
SUBTOTAL 121	ENGINEERING/INSPECTION-ONSI	3540	0	3540	3.16	112	3652	30	1096	4747
SUBTOTAL 1	ENGINEERING	3540	0	3540	3.16	112	3652	30	1096	4747
310031	CPAF BUILD REUSABLE GREENHOUSE	5605	0	5605	3.57	200	5805	30	1741	7546
310032	CPAF FAB GRNHS HVAC & TK EXHAUSTER	342166	0	342166	3.56	12181	354347	30	106304	460651
SUBTOTAL 3100	CPAF ONE TIME CONSTR - SUBT	347771	0	347771	3.56	12381	360152	30	108045	468197
310140	SWP AND SAFETY SUPPORT	54731	0	54731	3.56	1948	56679	30	17004	73683
310141	CPAF MOVE IN/ SETUP	22559	0	22559	3.56	803	23362	30	7009	30371
310151	CPAF HAND EXCAVATE FOR TK RISER	260408	0	260408	3.56	9271	269679	30	80904	350582
310161	CPAF CORE DRILL 12" HOLE IN TK DOME	8552	0	8552	3.55	304	8856	30	2657	11514
310172	CPAF FAB & INSTALL 12" RISER	13628	0	13628	3.57	486	14114	30	4235	18347
310182	BURNOUT	6284594	0	6284594	3.56	223732	6508326	30	1952498	8460823
SUBTOTAL 3101	CPAF COST EACH TANK - SUBTO	6644472	0	6644472	3.56	236544	6881016	30	2064307	8945320
SUBTOTAL 31	FA CONST-ONSITE E/C	6992243	0	6992243	3.56	248925	7241168	30	2172352	9413517
330051	WHC BURIAL CHARGE	858253	0	858253	0.00	0	858253	30	257476	1115729
SUBTOTAL 33	CONSTRUCTION-O/C	858253	0	858253	0.00	0	858253	30	257476	1115729
SUBTOTAL 3	CONSTRUCTION	7850496	0	7850496	3.17	248925	8099421	30	2429828	10529246
PROJECT TOTAL		7,854,036	0	7,854,036	3.17	249,037	8,103,073	30	2,430,924	10,533,993

1. DOCUMENTS AND DRAWINGS

DOCUMENTS: ENGINEERING STUDY (ISSUE B, MAY 1994)

DRAWINGS: NONE

2. MATERIAL PRICES

UNIT COSTS REPRESENT CURRENT PRICES FOR SPECIFIED MATERIAL.

3. LABOR RATES

CURRENT KEH BASE CRAFT RATES, AS ISSUED BY KEH FINANCE (EFFECTIVE 10-01-93), INCLUDE FRINGE BENEFITS, LABOR INSURANCE, TAXES AND TRAVEL WHERE APPLICABLE, PER HANFORD SITE STABILIZATION AGREEMENT, APPENDIX A (EFFECTIVE 09-06-93). NON CRAFT HOURLY RATES ARE BASED ON THE 1994 FISCAL YEAR BUDGET LIQUIDATION RATES AS ISSUED BY KEH FINANCE (EFFECTIVE 10-01-93).

4. GENERAL REQUIREMENTS/TECHNICAL SERVICES/OVERHEADS

A.) ONSITE CONSTRUCTION FORCES GENERAL REQUIREMENTS, TECHNICAL SERVICES AND CRAFT OVERHEAD COSTS ARE INCLUDED AS A COMPOSITE PERCENTAGE BASED ON THE KEH ESTIMATING FACTOR/BILLING SCHEDULE, REVISION 16, DATED OCTOBER 01, 1993. THE TOTAL COMPOSITE PERCENTAGE APPLIED TO ONSITE CONSTRUCTION FORCES LABOR, FOR THIS PROJECT, IS 94% FOR SHOP WORK AND 136% FOR FIELD WORK, WHICH IS REFLECTED IN THE "OH&P/B&I" COLUMN OF THE ESTIMATE DETAIL.

B.) ONSITE CONTRACT ADMINISTRATION AND CONSTRUCTION MANAGEMENT COSTS, ASSOCIATED WITH THE OVERALL MANAGEMENT OF THE FIXED PRICE CONTRACTS, ARE INCLUDED AS A COMPOSITE PERCENTAGE AND LUMP SUM ALLOWANCE (FOR BID PACKAGE PREP) BASED ON THE ESTIMATING FACTOR/BILLING SCHEDULE. THE TOTAL COMPOSITE PERCENTAGE AND LUMP SUM ALLOWANCE ARE APPLIED AGAINST THE TOTAL FIXED PRICE CONTRACT AMOUNT WHICH IS REFLECTED ON THE KEH SUMMARY REPORT DOER07, INCLUDED WITH THIS ESTIMATE. (FINAL ESTIMATES MAY BE PARTIALLY MANLOADED AND INCLUDED WITHIN THE ESTIMATE DETAIL)

5. ESCALATION

ESCALATION PERCENTAGES WERE CALCULATED BY THE HANFORD MATERIAL & LABOR ESCALATION STUDY, DATED FEBRUARY 1994. ESCALATION HAS BEEN CALCULATED USING JUNE 1994 RATES.

6. ROUNDING

U.S. DEPARTMENT OF ENERGY - DOE ORDER 5100.4 PAGE I-32 SUBPARAGRAPH (M), REQUIRES ROUNDING OF ALL GENERAL PLANT PROJECTS (GPP'S) AND LINE ITEM (LI) COST ESTIMATES. REFERENCE: DOE 5100.4, FIGURE I-11, DATED 10-31-84.

7. REMARKS

A.) ALL CONSTRUCTION IS ESTIMATED AS BY CPAF. E. & I. IS BY CPAF.
B.) NO DESIGN, PROJECT MANAGEMENT, OR WHC PROJECT MANAGEMENT IS INCLUDED.
C.) ALL EXCAVATED DIRT IS BARRELLED & REPLACED.
D.) NO ESCALATION IS APPLIED TO WBS 33 (WASTE BURIAL CHARGE) AS THE COST PER CUBIC FOOT ($173) COMES FROM THE 5 YEAR PROJECTION.

KAISER ENGINEERS HANFORD
WESTINGHOUSE HANFORD COMPANY
JOB NO. Z198 / ER5511
FILE NO. Z198SAC2

** IEST - INTERACTIVE ESTIMATING **
12" RISER IN S.S. TANKS USING SLOPED EXCAV.
STUDY-ADD 12" RISERS TO EXISTING SST.500mr/NONCONGE
DOE_R04 - COST CODE ACCOUNT SUMMARY

DATE 07/29/94 10:48:21
BY SMF, DP

COST CODE/WBS	DESCRIPTION	ESTIMATE SUBTOTAL	ONSITE INDIRECTS	SUB TOTAL	ESCALATION %	ESCALATION TOTAL	SUB TOTAL	CONTINGENCY %	CONTINGENCY TOTAL	TOTAL DOLLARS
000	ENGINEERING									
121001	ENGINEERING/INSPECTION-ONSITE E/C	3540	0	3540	3.16	112	3652	30	1096	4747
TOTAL 000	ENGINEERING	3540	0	3540	3.16	112	3652	30	1096	4747
700	SPECIAL EQUIP/PROCESS SYSTEMS									
310031	CPAF BUILD REUSABLE GREENHOUSE	5605	0	5605	3.57	200	5805	30	1741	7546
310032	CPAF FAB GRNHS HVAC & TK EXHAUSTER	342166	0	342166	3.56	12181	354347	30	106304	460651
310140	SWP AND SAFETY SUPPORT	54731	0	54731	3.56	1948	56679	30	17004	73683
310141	CPAF MOVE IN/ SETUP	22559	0	22559	3.56	803	23362	30	7009	30371
310151	CPAF HAND EXCAVATE FOR TK RISER	260408	0	260408	3.56	9271	269679	30	80904	350582
310161	CPAF CORE DRILL 12" HOLE IN TK DOME	8552	0	8552	3.55	304	8856	30	2657	11514
310172	CPAF FAB & INSTALL 12" RISER	13628	0	13628	3.57	486	14114	30	4235	18347
310182	BURNOUT	6284594	0	6284594	3.56	223732	6508326	30	1952498	8460823
330051	WHC BURIAL CHARGE	858253	0	858253	0.00	0	858253	30	257476	1115729
TOTAL 700	SPECIAL EQUIP/PROCESS SYSTEM	7850496	0	7850496	3.17	248925	8099421	30	2429828	10529246
PROJECT TOTAL		7,854,036	0	7,854,036	3.17	249,037	8,103,073	30	2,430,924	10,533,993

KAISER ENGINEERS HANFORD
WESTINGHOUSE HANFORD COMPANY
JOB NO. Z198 / ER5511
FILE NO. Z198SAC2

** IEST - INTERACTIVE ESTIMATING **
12" RISER IN S.S. TANKS USING SLOPED EXCAV.
STUDY-ADD 12" RISERS TO EXISTING SST.500mr/NONCONGE
DOE_R05 - ESTIMATE SUMMARY BY CSI DIVISION

DATE 07/29/94 10:48:24
BY SMF, DP

CSI	DESCRIPTION	ESTIMATE SUBTOTAL	ONSITE INDIRECTS	SUB TOTAL	ESCALATION %	ESCALATION TOTAL	SUB TOTAL	CONTINGENCY %	CONTINGENCY TOTAL	TOTAL DOLLARS
ENGINEERING										
00	TECHNICAL SERVICES	3540	0	3540	3.16	112	3652	30	1096	4747
	TOTAL ENGINEERING	3,540	0	3,540	3.16	112	3,652	30	1,096	4,747
CONSTRUCTION										
02	SITEWORK	7494997	0	7494997	3.15	236269	7731266	30	2319381	10050645
03	CONCRETE	2861	0	2861	3.57	102	2963	30	889	3852
15	MECHANICAL	352638	0	352638	3.56	12554	365192	30	109558	474749
	TOTAL CONSTRUCTION	7,850,496	0	7,850,496	3.17	248,925	8,099,421	30	2,429,828	10,529,246
PROJECT TOTAL		7,854,036	0	7,854,036	3.17	249,037	8,103,073	30	2,430,924	10,533,993

REFERENCE: ESTIMATE BASIS SHEET PAGE 3 OF 7
COST CODE ACCOUNT SUMMARY PAGE 4 OF 7

THE U.S. DEPARTMENT OF ENERGY - RICHLAND ORDER 5700.3 "COST ESTIMATING, ANALYSIS AND STANDARDIZATION" DATED 3-27-85, PROVIDES GUIDELINES FOR ESTIMATE CONTINGENCIES. THE GUIDELINE FOR A STUDY ESTIMATE SHOULD HAVE AN OVERALL RANGE OF 20 TO 30% .

CONTINGENCY IS EVALUATED AT THE THIRD COST CODE LEVEL AND SUMMARIZED AT THE PRIMARY AND SECONDARY COST CODE LEVEL OF THE DETAILED COST ESTIMATE.

000 ENGINEERING

121001	ENGINEERING/INSPECTION-ONSITE E/C	30%	CONTINGENCY WAS ADDED AS INSPECTION WILL HAVE SAME PROBLEMS AS CONSTRUCTION

AVERAGE ENGINEERING CONTINGENCY 30%

700 SPECIAL EQUIP/PROCESS SYSTEMS

310031	CPAF BUILD REUSABLE GREENHOUSE	30%	CONTINGENCY WAS ADDED AS DESIGN OF GREENHOUSE COULD VARY
310032	CPAF FAB GRNHS HVAC & TK EXHAUSTER	30	CONTINGENCY WAS ADDED AS SPECIFICATIONS FOR HVAC EQUIPMENT WILL CHANGE
310140	SWP AND SAFETY SUPPORT	30	CONTINGENCY WAS ADDED AS EXACT METHOD AND SCOPE OF WORK EXPECTED IS NOT KNOWN
310141	CPAF MOVE IN/ SETUP	30	CONTINGENCY WAS ADDED AS EXACT METHOD AND SCOPE OF WORK EXPECTED IS NOT KNOWN
310151	CPAF HAND EXCAVATE FOR TK RISER	30	CONTINGENCY WAS ADDED AS EXACT METHOD AND SCOPE OF WORK EXPECTED IS NOT KNOWN
310161	CPAF CORE DRILL 12" HOLE IN TK DOME	30	CONTINGENCY WAS ADDED AS EXACT METHOD AND SCOPE OF WORK EXPECTED IS NOT KNOWN
310172	CPAF FAB & INSTALL 12" RISER	30	CONTINGENCY WAS ADDED AS EXACT METHOD AND SCOPE OF WORK EXPECTED IS NOT KNOWN
310182	BURNOUT	30	CONTINGENCY WAS ADDED AS EXACT METHOD AND SCOPE OF WORK EXPECTED IS NOT KNOWN
330051	WHC BURIAL CHARGE	30	CONTINGENCY WAS ADDED AS EXACT METHOD AND SCOPE OF WORK EXPECTED IS NOT KNOWN

TOTAL 700 SPECIAL EQUIP/PROCESS SYSTEM 30

AVERAGE CONSTRUCTION CONTINGENCY 30%

AVERAGE PROJECT CONTINGENCY 30%

KAISER ENGINEERS HANFORD
WESTINGHOUSE HANFORD COMPANY
JOB NO. Z198 / ER5511
FILE NO. Z198SAC2

** IEST - INTERACTIVE ESTIMATING **
12" RISER IN S.S. TANKS USING SLOPED EXCAV.
STUDY-ADD 12" RISERS TO EXISTING SST.500mr/NONCONGE
DOE_R07 - ONSITE INDIRECT COSTS BY WBS

PAGE 7 OF 7
DATE 07/29/94 10:48:26
BY SMF, DP

WBS	DESCRIPTION	ESTIMATE SUBTOTAL	CONTRACT ADMINISTRATION %	CONTRACT ADMINISTRATION TOTAL	BID PACK PREP.	OTHER INDIRECTS	TOTAL INDIRECTS
121001	ENGINEERING/INSPECTION-ONSITE E/C	3540	0.00	0	0	0	0
310031	CPAF BUILD REUSABLE GREENHOUSE	5605	0.00	0	0	0	0
310032	CPAF FAB GRNHS HVAC & TK EXHAUSTER	342166	0.00	0	0	0	0
310140	SWP AND SAFETY SUPPORT	54731	0.00	0	0	0	0
310141	CPAF MOVE IN/ SETUP	22559	0.00	0	0	0	0
310151	CPAF HAND EXCAVATE FOR TK RISER	260408	0.00	0	0	0	0
310161	CPAF CORE DRILL 12" HOLE IN TK DOME	8552	0.00	0	0	0	0
310172	CPAF FAB & INSTALL 12" RISER	13628	0.00	0	0	0	0
310182	BURNOUT	6284594	0.00	0	0	0	0
330051	WHC BURIAL CHARGE	858253	0.00	0	0	0	0
	PROJECT TOTAL	7,854,036		0	0	0	0

KAISER ENGINEERS HANFORD
WESTINGHOUSE HANFORD COMPANY
JOB NO. Z198 / ER5511
FILE NO. Z198SAC2

** IEST - INTERACTIVE ESTIMATING **
12" RISER IN S.S. TANKS USING SLOPED EXCAV.
STUDY-ADD 12" RISERS TO EXISTING SST.500mr/NONCONGE
DOE_R01 - PROJECT COST SUMMARY

PAGE 1 OF 7
DATE 07/29/94 10:48:17
BY SMF, DP

COST CODE	DESCRIPTION	ESCALATED TOTAL COST	CONTINGENCY %	CONTINGENCY TOTAL	TOTAL DOLLARS
000	ENGINEERING	4,000	30	1,000	5,000
700	SPECIAL EQUIP/PROCESS SYSTEMS	8,099,000	30	2,430,000	10,529,000
	PROJECT TOTAL	8,103,000	30	2,431,000	10,534,000

TYPE OF ESTIMATE STUDY JULY 29, 1994

ARCHITECT ENGINEER G Chadwick Chris H Brevick

OPERATING CONTRACTOR C. DeFigh - [signature] 8/10/94

REMARKS:

NO DESIGN OR PROJECT MANAGEMENT IS INCLUDED.

(ROUNDED/ADJUSTED TO THE NEAREST " 1,000 / 10,000 " - PERCENTAGES NOT RECALCULATED TO REFLECT ROUNDING)

KAISER ENGINEERS HANFORD
WESTINGHOUSE HANFORD COMPANY
JOB NO. Z198 / ER5511
FILE NO. Z198SAD2

** IEST - INTERACTIVE ESTIMATING **
NEW 12" RISER IN S.S. TANKS USING SLOPED EXCAV.
STUDY-ADD 12" RISERS TO EXISTING SST. 25mr/ CONGEST
DOE_R02 - WORK BREAKDOWN STRUCTURE SUMMARY

DATE 07/29/94 13:57:49
BY SMF, DP

WBS	DESCRIPTION	ESTIMATE SUBTOTAL	ONSITE INDIRECTS	SUB TOTAL	ESCALATION %	ESCALATION TOTAL	SUB TOTAL	CONTINGENCY %	CONTINGENCY TOTAL	TOTAL DOLLARS
121001	ENGINEERING/INSPECTION-ONSITE E/C	3540	0	3540	3.16	112	3652	30	1096	4747
SUBTOTAL 121	ENGINEERING/INSPECTION-ONSI	3540	0	3540	3.16	112	3652	30	1096	4747
SUBTOTAL 1	ENGINEERING	3540	0	3540	3.16	112	3652	30	1096	4747
310031	CPAF BUILD REUSABLE GREENHOUSE	5605	0	5605	3.57	200	5805	30	1741	7546
310032	CPAF FAB GRNHS HVAC & TK EXHAUSTER	342166	0	342166	3.56	12181	354347	30	106304	460651
SUBTOTAL 3100	CPAF ONE TIME CONSTR - SUBT	347771	0	347771	3.56	12381	360152	30	108045	468197
310140	SWP AND SAFETY SUPPORT	56948	0	56948	3.56	2027	58975	30	17693	76668
310141	CPAF MOVE IN/ SETUP & SUPPORT	23475	0	23475	3.56	836	24311	30	7293	31604
310151	CPAF HAND EXCAVATE FOR TK RISER	260408	0	260408	3.56	9271	269679	30	80904	350582
310156	CPAF SUPPORT ADDITT. LINES	5599	0	5599	3.55	199	5798	30	1739	7538
310161	CPAF CORE DRILL 12" HOLE IN TK DOME	8552	0	8552	3.55	304	8856	30	2657	11514
310172	CPAF FAB & INSTALL 12" RISER	13628	0	13628	3.57	486	14114	30	4235	18347
310182	BURNOUT	236432	0	236432	3.56	8417	244849	30	73455	318304
SUBTOTAL 3101	CPAF COST EACH TANK - SUBTO	605042	0	605042	3.56	21540	626582	30	187976	814557
SUBTOTAL 31	FA CONST-ONSITE E/C	952813	0	952813	3.56	33921	986734	30	296021	1282754
330051	WHC BURIAL CHARGE	858253	0	858253	0.00	0	858253	30	257476	1115729
SUBTOTAL 33	CONSTRUCTION-O/C	858253	0	858253	0.00	0	858253	30	257476	1115729
SUBTOTAL 3	CONSTRUCTION	1811066	0	1811066	1.87	33921	1844987	30	553497	2398483
PROJECT TOTAL		1,814,606	0	1,814,606	1.88	34,033	1,848,639	30	554,593	2,403,230

1. DOCUMENTS AND DRAWINGS
==========
DOCUMENTS: ENGINEERING STUDY (ISSUE B, MAY 1994)

DRAWINGS: NONE

2. MATERIAL PRICES
==========
UNIT COSTS REPRESENT CURRENT PRICES FOR SPECIFIED MATERIAL.

3. LABOR RATES
==========
CURRENT KEH BASE CRAFT RATES, AS ISSUED BY KEH FINANCE (EFFECTIVE 10-01-93), INCLUDE FRINGE BENEFITS, LABOR INSURANCE, TAXES AND TRAVEL WHERE APPLICABLE, PER HANFORD SITE STABILIZATION AGREEMENT, APPENDIX A (EFFECTIVE 09-06-93). NON CRAFT HOURLY RATES ARE BASED ON THE 1994 FISCAL YEAR BUDGET LIQUIDATION RATES AS ISSUED BY KEH FINANCE (EFFECTIVE 10-01-93).

4. GENERAL REQUIREMENTS/TECHNICAL SERVICES/OVERHEADS
==========
A.) ONSITE CONSTRUCTION FORCES GENERAL REQUIREMENTS, TECHNICAL SERVICES AND CRAFT OVERHEAD COSTS ARE INCLUDED AS A COMPOSITE PERCENTAGE BASED ON THE KEH ESTIMATING FACTOR/BILLING SCHEDULE, REVISION 16, DATED OCTOBER 01, 1993. THE TOTAL COMPOSITE PERCENTAGE APPLIED TO ONSITE CONSTRUCTION FORCES LABOR, FOR THIS PROJECT, IS 94% FOR SHOP WORK AND 136% FOR FIELD WORK, WHICH IS REFLECTED IN THE "OH&P/B&I" COLUMN OF THE ESTIMATE DETAIL.
B.) ONSITE CONTRACT ADMINISTRATION AND CONSTRUCTION MANAGEMENT COSTS, ASSOCIATED WITH THE OVERALL MANAGEMENT OF THE FIXED PRICE CONTRACTS, ARE INCLUDED AS A COMPOSITE PERCENTAGE AND LUMP SUM ALLOWANCE (FOR BID PACKAGE PREP) BASED ON THE ESTIMATING FACTOR/BILLING SCHEDULE. THE TOTAL COMPOSITE PERCENTAGE AND LUMP SUM ALLOWANCE ARE APPLIED AGAINST THE TOTAL FIXED PRICE CONTRACT AMOUNT WHICH IS REFLECTED ON THE KEH SUMMARY REPORT DOER07, INCLUDED WITH THIS ESTIMATE. (FINAL ESTIMATES MAY BE PARTIALLY MANLOADED AND INCLUDED WITHIN THE ESTIMATE DETAIL)

5. ESCALATION
==========
ESCALATION PERCENTAGES WERE CALCULATED BY THE HANFORD MATERIAL & LABOR ESCALATION STUDY, DATED FEBRUARY 1994. ESCALATION HAS BEEN CALCULATED USING JUNE 1994 RATES.

6. ROUNDING
==========
U.S. DEPARTMENT OF ENERGY - DOE ORDER 5100.4 PAGE I-32 SUBPARAGRAPH (M), REQUIRES ROUNDING OF ALL GENERAL PLANT PROJECTS (GPP'S) AND LINE ITEM (LI) COST ESTIMATES. REFERENCE: DOE 5100.4, FIGURE I-11, DATED 10-31-84.

7. REMARKS
==========
A.) ALL CONSTRUCTION IS ESTIMATED AS BY CPAF. E. & I. IS BY CPAF.
B.) NO DESIGN, PROJECT MANAGEMENT, OR WHC PROJECT MANAGEMENT IS INCLUDED.
C.) ALL EXCAVATED DIRT IS BARRELLED & REPLACED.
D.) NO ESCALATION IS APPLIED TO WBS 33 (WASTE BURIAL CHARGE) AS THE COST PER CUBIC FOOT ($173) COMES FROM THE 5 YEAR PROJECTION.

KAISER ENGINEERS HANFORD
WESTINGHOUSE HANFORD COMPANY
JOB NO. Z198 / ER5511
FILE NO. Z198SAD2

** IEST - INTERACTIVE ESTIMATING **
NEW 12" RISER IN S.S. TANKS USING SLOPED EXCAV.
STUDY-ADD 12" RISERS TO EXISTING SST. 25mr/ CONGEST
DOE_R04 - COST CODE ACCOUNT SUMMARY

DATE 07/29/94 13:57:53
BY SMF, DP

COST CODE/WBS	DESCRIPTION	ESTIMATE SUBTOTAL	ONSITE INDIRECTS	SUB TOTAL	ESCALATION %	ESCALATION TOTAL	SUB TOTAL	CONTINGENCY %	CONTINGENCY TOTAL	TOTAL DOLLARS
000	ENGINEERING									
121001	ENGINEERING/INSPECTION-ONSITE E/C	3540	0	3540	3.16	112	3652	30	1096	4747
TOTAL 000	ENGINEERING	3540	0	3540	3.16	112	3652	30	1096	4747
700	SPECIAL EQUIP/PROCESS SYSTEMS									
310031	CPAF BUILD REUSABLE GREENHOUSE	5605	0	5605	3.57	200	5805	30	1741	7546
310032	CPAF FAB GRNHS HVAC & TK EXHAUSTER	342166	0	342166	3.56	12181	354347	30	106304	460651
310140	SWP AND SAFETY SUPPORT	56948	0	56948	3.56	2027	58975	30	17693	76668
310141	CPAF MOVE IN/ SETUP & SUPPORT	23475	0	23475	3.56	836	24311	30	7293	31604
310151	CPAF HAND EXCAVATE FOR TK RISER	260408	0	260408	3.56	9271	269679	30	80904	350582
310156	CPAF SUPPORT ADDITT. LINES	5599	0	5599	3.55	199	5798	30	1739	7538
310161	CPAF CORE DRILL 12" HOLE IN TK DOME	8552	0	8552	3.55	304	8856	30	2657	11514
310172	CPAF FAB & INSTALL 12" RISER	13628	0	13628	3.57	486	14114	30	4235	18347
310182	BURNOUT	236432	0	236432	3.56	8417	244849	30	73455	318304
330051	WHC BURIAL CHARGE	858253	0	858253	0.00	0	858253	30	257476	1115729
TOTAL 700	SPECIAL EQUIP/PROCESS SYSTEM	1811066	0	1811066	1.87	33921	1844987	30	553497	2398483
PROJECT TOTAL		1,814,606	0	1,814,606	1.88	34,033	1,848,639	30	554,593	2,403,230

KAISER ENGINEERS HANFORD
WESTINGHOUSE HANFORD COMPANY
JOB NO. Z198 / ER5511
FILE NO. Z198SAD2

** IEST - INTERACTIVE ESTIMATING **
NEW 12" RISER IN S.S. TANKS USING SLOPED EXCAV.
STUDY-ADD 12" RISERS TO EXISTING SST. 25mr/ CONGEST
DOE_R05 - ESTIMATE SUMMARY BY CSI DIVISION

DATE 07/29/94 13:57:57
BY SMF, DP

CSI	DESCRIPTION	ESTIMATE SUBTOTAL	ONSITE INDIRECTS	SUB TOTAL	ESCALATION %	ESCALATION TOTAL	SUB TOTAL	CONTINGENCY %	CONTINGENCY TOTAL	TOTAL DOLLARS
ENGINEERING										
00	TECHNICAL SERVICES	3540	0	3540	3.16	112	3652	30	1096	4747
	TOTAL ENGINEERING	3,540	0	3,540	3.16	112	3,652	30	1,096	4,747
CONSTRUCTION										
02	SITEWORK	1455567	0	1455567	1.46	21265	1476832	30	443050	1919882
03	CONCRETE	2861	0	2861	3.57	102	2963	30	889	3852
15	MECHANICAL	352638	0	352638	3.56	12554	365192	30	109558	474749
	TOTAL CONSTRUCTION	1,811,066	0	1,811,066	1.87	33,921	1,844,987	30	553,497	2,398,483
PROJECT TOTAL		1,814,606	0	1,814,606	1.88	34,033	1,848,639	30	554,593	2,403,230

REFERENCE: ESTIMATE BASIS SHEET — PAGE 3 OF 7
COST CODE ACCOUNT SUMMARY — PAGE 4 OF 7

THE U.S. DEPARTMENT OF ENERGY - RICHLAND ORDER 5700.3 "COST ESTIMATING, ANALYSIS AND STANDARDIZATION" DATED 3-27-85, PROVIDES GUIDELINES FOR ESTIMATE CONTINGENCIES. THE GUIDELINE FOR A STUDY ESTIMATE SHOULD HAVE AN OVERALL RANGE OF 20 TO 30% .

CONTINGENCY IS EVALUATED AT THE THIRD COST CODE LEVEL AND SUMMARIZED AT THE PRIMARY AND SECONDARY COST CODE LEVEL OF THE DETAILED COST ESTIMATE.

000 ENGINEERING

121001	ENGINEERING/INSPECTION-ONSITE E/C	30%	CONTINGENCY WAS ADDED AS INSPECTION WILL HAVE SAME PROBLEMS AS CONSTRUCTION

AVERAGE ENGINEERING CONTINGENCY 30%

700 SPECIAL EQUIP/PROCESS SYSTEMS

310031	CPAF BUILD REUSABLE GREENHOUSE	30%	CONTINGENCY WAS ADDED AS DESIGN OF GREENHOUSE COULD VARY
310032	CPAF FAB GRNHS HVAC & TK EXHAUSTER	30	CONTINGENCY WAS ADDED AS SPECIFICATIONS FOR HVAC EQUIPMENT WILL CHANGE
310140	SWP AND SAFETY SUPPORT	30	CONTINGENCY WAS ADDED AS EXACT METHOD AND SCOPE OF WORK EXPECTED IS NOT KNOWN
310141	CPAF MOVE IN/ SETUP	30	CONTINGENCY WAS ADDED AS EXACT METHOD AND SCOPE OF WORK EXPECTED IS NOT KNOWN
310151	CPAF HAND EXCAVATE FOR TK RISER	30	CONTINGENCY WAS ADDED AS EXACT METHOD AND SCOPE OF WORK EXPECTED IS NOT KNOWN
310161	CPAF CORE DRILL 12" HOLE IN TK DOME	30	CONTINGENCY WAS ADDED AS EXACT METHOD AND SCOPE OF WORK EXPECTED IS NOT KNOWN
310172	CPAF FAB & INSTALL 12" RISER	30	CONTINGENCY WAS ADDED AS EXACT METHOD AND SCOPE OF WORK EXPECTED IS NOT KNOWN
310182	BURNOUT	30	CONTINGENCY WAS ADDED AS EXACT METHOD AND SCOPE OF WORK EXPECTED IS NOT KNOWN
330051	WHC BURIAL CHARGE	30	CONTINGENCY WAS ADDED AS EXACT METHOD AND SCOPE OF WORK EXPECTED IS NOT KNOWN

TOTAL 700 SPECIAL EQUIP/PROCESS SYSTEM 30

AVERAGE CONSTRUCTION CONTINGENCY 30%

AVERAGE PROJECT CONTINGENCY 30%

KAISER ENGINEERS HANFORD
WESTINGHOUSE HANFORD COMPANY
JOB NO. Z198 / ER5511
FILE NO. Z198SAD2

** IEST - INTERACTIVE ESTIMATING **
NEW 12" RISER IN S.S. TANKS USING SLOPED EXCAV.
STUDY-ADD 12" RISERS TO EXISTING SST. 25mr/ CONGEST
DOE_R07 - ONSITE INDIRECT COSTS BY WBS

PAGE 7 OF 7
DATE 07/29/94 13:58:01
BY SMF, DP

WBS	DESCRIPTION	ESTIMATE SUBTOTAL	CONTRACT %	ADMINISTRATION TOTAL	BID PACK PREP.	OTHER INDIRECTS	TOTAL INDIRECTS
121001	ENGINEERING/INSPECTION-ONSITE E/C	3540	0.00	0	0	0	0
310031	CPAF BUILD REUSABLE GREENHOUSE	5605	0.00	0	0	0	0
310032	CPAF FAB GRNHS HVAC & TK EXHAUSTER	342166	0.00	0	0	0	0
310140	SWP AND SAFETY SUPPORT	56948	0.00	0	0	0	0
310141	CPAF MOVE IN/ SETUP & SUPPORT	23475	0.00	0	0	0	0
310151	CPAF HAND EXCAVATE FOR TK RISER	260408	0.00	0	0	0	0
310156	CPAF SUPPORT ADDITT. LINES	5599	0.00	0	0	0	0
310161	CPAF CORE DRILL 12" HOLE IN TK DOME	8552	0.00	0	0	0	0
310172	CPAF FAB & INSTALL 12" RISER	13628	0.00	0	0	0	0
310182	BURNOUT	236432	0.00	0	0	0	0
330051	WHC BURIAL CHARGE	858253	0.00	0	0	0	0
	PROJECT TOTAL	1,814,606		0	0	0	0

KAISER ENGINEERS HANFORD
WESTINGHOUSE HANFORD COMPANY
JOB NO. Z198 / ER5511
FILE NO. Z198SDA2

** IEST - INTERACTIVE ESTIMATING **
12" RISER IN S.S. TANKS USING ROTARY DRILL
STUDY -ADD 12" RISER TO EXISTING SST- 25mr VERSION
DOE_R01 - PROJECT COST SUMMARY

DATE 07/27/94 08:28:20
BY SMF, DP

COST CODE	DESCRIPTION	ESCALATED TOTAL COST	CONTINGENCY %	CONTINGENCY TOTAL	TOTAL DOLLARS
000	ENGINEERING	4,000	30	1,000	5,000
700	SPECIAL EQUIP/PROCESS SYSTEMS	564,000	30	169,000	733,000
	PROJECT TOTAL	568,000	30	170,000	738,000

TYPE OF ESTIMATE STUDY JULY 27, 1994

ARCHITECT ENGINEER H. Chadwick Chris W. Brevick

OPERATING CONTRACTOR C. D. Wright-Price 8/10/94

REMARKS:

NO DESIGN OR PROJECT MANAGEMENT IS INCLUDED.

(ROUNDED/ADJUSTED TO THE NEAREST " 1,000 / 10,000 " - PERCENTAGES NOT RECALCULATED TO REFLECT ROUNDING)

KAISER ENGINEERS HANFORD
WESTINGHOUSE HANFORD COMPANY
JOB NO. Z198 / ER5511
FILE NO. Z198SBA2

** IEST - INTERACTIVE ESTIMATING **
NEW 12" RISER IN S.S. TANKS USING SHORED EXCAV.
STUDY -ADD 12" RISER TO EXIST. SST -25mr/NONCONGEST
DOE_R02 - WORK BREAKDOWN STRUCTURE SUMMARY

DATE 07/27/94 14:30:34
BY SMF/DP

WBS	DESCRIPTION	ESTIMATE SUBTOTAL	ONSITE INDIRECTS	SUB TOTAL	ESCALATION %	ESCALATION TOTAL	SUB TOTAL	CONTINGENCY %	CONTINGENCY TOTAL	TOTAL DOLLARS
121001	ENGINEERING/INSPECTION-ONSITE E/C	3540	0	3540	3.16	112	3652	30	1096	4747
SUBTOTAL 121	ENGINEERING/INSPECTION-ONSI	3540	0	3540	3.16	112	3652	30	1096	4747
SUBTOTAL 1	ENGINEERING	3540	0	3540	3.16	112	3652	30	1096	4747
310031	CPAF BUILD REUSABLE GREENHOUSE	5605	0	5605	3.57	200	5805	30	1741	7546
310032	CPAF BUILD REUSABLE HVAC/ EXHAUSTER	342166	0	342166	3.56	12181	354347	30	106304	460651
SUBTOTAL 3100	CPAF ONE TIME CONSTR - SUBT	347771	0	347771	3.56	12381	360152	30	108045	468197
310140	SWP AND SAFETY SUPPORT	36240	0	36240	3.56	1290	37530	30	11259	48789
310141	CPAF MOVE IN/ SETUP	23758	0	23758	3.56	846	24604	30	7381	31985
310152	CPAF HAND EXCAV. RISER W/ SHORING	102842	0	102842	3.56	3661	106503	30	31951	138454
310161	CPAF CORE DRILL 12" HOLE IN TK DOME	8800	0	8800	3.56	313	9113	30	2734	11847
310172	CPAF FAB & INSTALL 12" RISER	13643	0	13643	3.56	486	14129	30	4239	18367
310182	BURNOUT	164899	0	164899	3.56	5870	170769	30	51231	222000
SUBTOTAL 3101	CPAF COST EACH TANK - SUBTO	350182	0	350182	3.56	12466	362648	30	108795	471442
SUBTOTAL 31	FA CONST-ONSITE E/C	697953	0	697953	3.56	24847	722800	30	216840	939639
330052	WHC BURIAL CHARGE	305172	0	305172	0.00	0	305172	30	91552	396724
SUBTOTAL 33	CONSTRUCTION-O/C	305172	0	305172	0.00	0	305172	30	91552	396724
SUBTOTAL 3	CONSTRUCTION	1003125	0	1003125	2.48	24847	1027972	30	308392	1336363
PROJECT TOTAL		1,006,665	0	1,006,665	2.48	24,959	1,031,624	30	309,488	1,341,110

1. DOCUMENTS AND DRAWINGS

DOCUMENTS: ENGINEERING STUDY (ISSUE B, MAY 1994)

DRAWINGS: NONE

2. MATERIAL PRICES

UNIT COSTS REPRESENT CURRENT PRICES FOR SPECIFIED MATERIAL.

3. LABOR RATES

CURRENT KEH BASE CRAFT RATES, AS ISSUED BY KEH FINANCE (EFFECTIVE 10-01-93), INCLUDE FRINGE BENEFITS, LABOR INSURANCE, TAXES AND TRAVEL WHERE APPLICABLE, PER HANFORD SITE STABILIZATION AGREEMENT, APPENDIX A (EFFECTIVE 09-06-93). NON CRAFT HOURLY RATES ARE BASED ON THE 1994 FISCAL YEAR BUDGET LIQUIDATION RATES AS ISSUED BY KEH FINANCE (EFFECTIVE 10-01-93).

4. GENERAL REQUIREMENTS/TECHNICAL SERVICES/OVERHEADS

A.) ONSITE CONSTRUCTION FORCES GENERAL REQUIREMENTS, TECHNICAL SERVICES AND CRAFT OVERHEAD COSTS ARE INCLUDED AS A COMPOSITE PERCENTAGE BASED ON THE KEH ESTIMATING FACTOR/BILLING SCHEDULE, REVISION 16, DATED OCTOBER 01, 1993. THE TOTAL COMPOSITE PERCENTAGE APPLIED TO ONSITE CONSTRUCTION FORCES LABOR, FOR THIS PROJECT, IS 94% FOR SHOP WORK AND 136% FOR FIELD WORK, WHICH IS REFLECTED IN THE "OH&P/B&I" COLUMN OF THE ESTIMATE DETAIL.

B.) ONSITE CONTRACT ADMINISTRATION AND CONSTRUCTION MANAGEMENT COSTS, ASSOCIATED WITH THE OVERALL MANAGEMENT OF THE FIXED PRICE CONTRACTS, ARE INCLUDED AS A COMPOSITE PERCENTAGE AND LUMP SUM ALLOWANCE (FOR BID PACKAGE PREP) BASED ON THE ESTIMATING FACTOR/BILLING SCHEDULE. THE TOTAL COMPOSITE PERCENTAGE AND LUMP SUM ALLOWANCE ARE APPLIED AGAINST THE TOTAL FIXED PRICE CONTRACT AMOUNT WHICH IS REFLECTED ON THE KEH SUMMARY REPORT DOER07, INCLUDED WITH THIS ESTIMATE. (FINAL ESTIMATES MAY BE PARTIALLY MANLOADED AND INCLUDED WITHIN THE ESTIMATE DETAIL)

5. ESCALATION

ESCALATION PERCENTAGES WERE CALCULATED BY THE HANFORD MATERIAL & LABOR ESCALATION STUDY, DATED FEBRUARY 1994. ESCALATION WAS CALCULATED WITH JUNE 1994 RATES.

6. ROUNDING

U.S. DEPARTMENT OF ENERGY - DOE ORDER 5100.4 PAGE I-32 SUBPARAGRAPH (M), REQUIRES ROUNDING OF ALL GENERAL PLANT PROJECTS (GPP'S) AND LINE ITEM (LI) COST ESTIMATES. REFERENCE: DOE 5100.4, FIGURE I-11, DATED 10-31-84.

7. REMARKS

A.) ALL CONSTRUCTION IS ESTIMATED AS BY CPAF. E. & I. IS BY CPAF.
B.) NO DESIGN, PROJECT MANAGEMENT, OR WHC PROJECT MANAGEMENT IS INCLUDED.
C.) ALL EXCAVATED DIRT IS BARRELLED & REPLACED.
D.) NO ESCALATION IS APPLIED TO WBS 33 (WASTE BURIAL CHARGE) AS THE COST PER CUBIC FOOT ($173) COMES FROM THE 5 YEAR PROJECTION.

COST CODE/WBS	DESCRIPTION	ESTIMATE SUBTOTAL	ONSITE INDIRECTS	SUB TOTAL	ESCALATION %	ESCALATION TOTAL	SUB TOTAL	CONTINGENCY %	CONTINGENCY TOTAL	TOTAL DOLLARS
000	ENGINEERING									
121001	ENGINEERING/INSPECTION-ONSITE E/C	3540	0	3540	3.16	112	3652	30	1096	4747
TOTAL 000	ENGINEERING	3540	0	3540	3.16	112	3652	30	1096	4747
700	SPECIAL EQUIP/PROCESS SYSTEMS									
310031	CPAF BUILD REUSABLE GREENHOUSE	5605	0	5605	3.57	200	5805	30	1741	7546
310032	CPAF BUILD REUSABLE HVAC/ EXHAUSTER	342166	0	342166	3.56	12181	354347	30	106304	460651
310140	SWP AND SAFETY SUPPORT	36240	0	36240	3.56	1290	37530	30	11259	48789
310141	CPAF MOVE IN/ SETUP	23758	0	23758	3.56	846	24604	30	7381	31985
310152	CPAF HAND EXCAV. RISER W/ SHORING	102842	0	102842	3.56	3661	106503	30	31951	138454
310161	CPAF CORE DRILL 12" HOLE IN TK DOME	8800	0	8800	3.56	313	9113	30	2734	11847
310172	CPAF FAB & INSTALL 12" RISER	13643	0	13643	3.56	486	14129	30	4239	18367
310182	BURNOUT	164899	0	164899	3.56	5870	170769	30	51231	222000
330052	WHC BURIAL CHARGE	305172	0	305172	0.00	0	305172	30	91552	396724
TOTAL 700	SPECIAL EQUIP/PROCESS SYSTEM	1003125	0	1003125	2.48	24847	1027972	30	308392	1336363
PROJECT TOTAL		1,006,665	0	1,006,665	2.48	24,959	1,031,624	30	309,488	1,341,110

KAISER ENGINEERS HANFORD
WESTINGHOUSE HANFORD COMPANY
JOB NO. Z198 / ER5511
FILE NO. Z198SBA2

** IEST - INTERACTIVE ESTIMATING **
NEW 12" RISER IN S.S. TANKS USING SHORED EXCAV.
STUDY -ADD 12" RISER TO EXIST. SST -25mr/NONCONGEST
DOE_R05 - ESTIMATE SUMMARY BY CSI DIVISION

DATE 07/27/94 14:30:40
BY SMF/DP

CSI	DESCRIPTION	ESTIMATE SUBTOTAL	ONSITE INDIRECTS	SUB TOTAL	ESCALATION %	ESCALATION TOTAL	SUB TOTAL	CONTINGENCY %	CONTINGENCY TOTAL	TOTAL DOLLARS
ENGINEERING										
00	TECHNICAL SERVICES	3540	0	3540	3.16	112	3652	30	1096	4747
	TOTAL ENGINEERING	3,540	0	3,540	3.16	112	3,652	30	1,096	4,747
CONSTRUCTION										
02	SITEWORK	647626	0	647626	1.88	12191	659817	30	197945	857762
03	CONCRETE	2861	0	2861	3.57	102	2963	30	889	3852
15	MECHANICAL	352638	0	352638	3.56	12554	365192	30	109558	474749
	TOTAL CONSTRUCTION	1,003,125	0	1,003,125	2.48	24,847	1,027,972	30	308,392	1,336,363
PROJECT TOTAL		1,006,665	0	1,006,665	2.48	24,959	1,031,624	30	309,488	1,341,110

REFERENCE: ESTIMATE BASIS SHEET PAGE 3 OF 7
COST CODE ACCOUNT SUMMARY PAGE 4 OF 7

THE U.S. DEPARTMENT OF ENERGY - RICHLAND ORDER 5700.3 "COST ESTIMATING, ANALYSIS AND STANDARDIZATION" DATED 3-27-85, PROVIDES GUIDELINES FOR ESTIMATE CONTINGENCIES. THE GUIDELINE FOR A STUDY ESTIMATE SHOULD HAVE AN OVERALL RANGE OF 20 TO 30% .

CONTINGENCY IS EVALUATED AT THE THIRD COST CODE LEVEL AND SUMMARIZED AT THE PRIMARY AND SECONDARY COST CODE LEVEL OF THE DETAILED COST ESTIMATE.

000 ENGINEERING

121001	ENGINEERING/INSPECTION-ONSITE E/C	30%	CONTINGENCY WAS ADDED AS INSPECTION WILL HAVE SAME PROBLEMS AS CONSTRUCTION

AVERAGE ENGINEERING CONTINGENCY 30%

700 SPECIAL EQUIP/PROCESS SYSTEMS

310031	CPAF BUILD REUSABLE GREENHOUSE	30%	CONTINGENCY WAS ADDED AS DESIGN OF GREENHOUSE COULD VARY
310032	CPAF FAB GRNHS HVAC & TK EXHAUSTER	30	CONTINGENCY WAS ADDED AS SPECIFICATIONS FOR HVAC EQUIPMENT WILL CHANGE
310140	SWP AND SAFETY SUPPORT	30	CONTINGENCY WAS ADDED AS EXACT METHOD AND SCOPE OF WORK EXPECTED IS NOT KNOWN
310141	CPAF MOVE IN/ SETUP	30	CONTINGENCY WAS ADDED AS EXACT METHOD AND SCOPE OF WORK EXPECTED IS NOT KNOWN
310152	CPAF HAND EXCAV. RISER W/ SHORING	30	CONTINGENCY WAS ADDED AS EXACT METHOD AND SCOPE OF WORK EXPECTED IS NOT KNOWN
310161	CPAF CORE DRILL 12" HOLE IN TK DOME	30	CONTINGENCY WAS ADDED AS EXACT METHOD AND SCOPE OF WORK EXPECTED IS NOT KNOWN
310172	CPAF FAB & INSTALL 12" RISER	30	CONTINGENCY WAS ADDED AS EXACT METHOD AND SCOPE OF WORK EXPECTED IS NOT KNOWN
310182	BURNOUT	30	CONTINGENCY WAS ADDED AS EXACT METHOD AND SCOPE OF WORK EXPECTED IS NOT KNOWN
330052	WHC BURIAL CHARGE	30	CONTINGENCY WAS ADDED AS EXACT METHOD AND SCOPE OF WORK EXPECTED IS NOT KNOWN

TOTAL 700 SPECIAL EQUIP/PROCESS SYSTEM 30

AVERAGE CONSTRUCTION CONTINGENCY 30%

AVERAGE PROJECT CONTINGENCY 30%

KAISER ENGINEERS HANFORD
WESTINGHOUSE HANFORD COMPANY
JOB NO. Z198 / ER5511
FILE NO. Z198SBA2

** IEST - INTERACTIVE ESTIMATING **
NEW 12" RISER IN S.S. TANKS USING SHORED EXCAV.
STUDY -ADD 12" RISER TO EXIST. SST -25mr/NONCONGEST
DOE_R07 - ONSITE INDIRECT COSTS BY WBS

DATE 07/27/94 14:30:43
BY SMF/DP

WBS	DESCRIPTION	ESTIMATE SUBTOTAL	CONTRACT %	ADMINISTRATION TOTAL	BID PACK PREP.	OTHER INDIRECTS	TOTAL INDIRECTS
121001	ENGINEERING/INSPECTION-ONSITE E/C	3540	0.00	0	0	0	0
310031	CPAF BUILD REUSABLE GREENHOUSE	5605	0.00	0	0	0	0
310032	CPAF BUILD REUSABLE HVAC/ EXHAUSTER	342166	0.00	0	0	0	0
310140	SWP AND SAFETY SUPPORT	36240	0.00	0	0	0	0
310141	CPAF MOVE IN/ SETUP	23758	0.00	0	0	0	0
310152	CPAF HAND EXCAV. RISER W/ SHORING	102842	0.00	0	0	0	0
310161	CPAF CORE DRILL 12" HOLE IN TK DOME	8800	0.00	0	0	0	0
310172	CPAF FAB & INSTALL 12" RISER	13643	0.00	0	0	0	0
310182	BURNOUT	164899	0.00	0	0	0	0
330052	WHC BURIAL CHARGE	305172	0.00	0	0	0	0
	PROJECT TOTAL	1,006,665		0	0	0	0

KAISER ENGINEERS HANFORD
WESTINGHOUSE HANFORD COMPANY
JOB NO. Z198 / ER5511
FILE NO. Z198SFC2

** IEST - INTERACTIVE ESTIMATING **
12" RISER IN S.S. TANKS USING STRADDLE CRANE
STUDY -ADD 12" RISER TO EXISTING SST -500mr VERSION
DOE_R01 - PROJECT COST SUMMARY

PAGE 1 OF 7
DATE 07/29/94 09:58:33
BY SMF/ DP

COST CODE	DESCRIPTION	ESCALATED TOTAL COST	CONTINGENCY %	CONTINGENCY TOTAL	TOTAL DOLLARS
000	ENGINEERING	4,000	30	1,000	5,000
700	SPECIAL EQUIP/PROCESS SYSTEMS	3,448,000	30	1,034,000	4,482,000
	PROJECT TOTAL	3,452,000	30	1,035,000	4,487,000

TYPE OF ESTIMATE STUDY JULY 29, 1994

ARCHITECT ENGINEER H Chadwick Chris H Brevick

OPERATING CONTRACTOR C. Dotzh-Price 8/10/94

REMARKS:

NO DESIGN OR PROJECT MANAGEMENT IS INCLUDED.

(ROUNDED/ADJUSTED TO THE NEAREST " 1,000 / 10,000 " - PERCENTAGES NOT RECALCULATED TO REFLECT ROUNDING)

KAISER ENGINEERS HANFORD
WESTINGHOUSE HANFORD COMPANY
JOB NO. Z198 / ER5511
FILE NO. Z198SAC2

** IEST - INTERACTIVE ESTIMATING **
12" RISER IN S.S. TANKS USING CAISSON EXCAV.
STUDY -ADD 12" RISER TO EXISTING SST- 25mr/NONCONGE
DOE_R02 - WORK BREAKDOWN STRUCTURE SUMMARY

DATE 08/01/94 08:54:03
BY SMF, DP

WB$	DESCRIPTION	ESTIMATE SUBTOTAL	ONSITE INDIRECTS	SUB TOTAL	ESCALATION %	ESCALATION TOTAL	SUB TOTAL	CONTINGENCY %	CONTINGENCY TOTAL	TOTAL DOLLARS
121001	ENGINEERING/INSPECTION-ONSITE E/C	3540	0	3540	3.16	112	3652	30	1096	4747
SUBTOTAL 121	ENGINEERING/INSPECTION-ONSI	3540	0	3540	3.16	112	3652	30	1096	4747
SUBTOTAL 1	ENGINEERING	3540	0	3540	3.16	112	3652	30	1096	4747
310031	CPAF BUILD REUSABLE GREENHOUSE	5605	0	5605	3.57	200	5805	30	1741	7546
310032	CPAF FAB GRNHS HVAC & TK EXHAUSTER	342166	0	342166	3.56	12181	354347	30	106304	460651
SUBTOTAL 3100	CPAF ONE TIME CONSTR - SUBT	347771	0	347771	3.56	12381	360152	30	108045	468197
310140	SWP AND SAFETY SUPPORT	23763	0	23763	3.56	846	24609	30	7383	31992
310141	CPAF MOVE IN/ SETUP	23758	0	23758	3.56	846	24604	30	7381	31985
310153	CPAF HAND EXCAV. RISER W/ CAISSON	50304	0	50304	3.56	1791	52095	30	15628	67723
310161	CPAF CORE DRILL 12" HOLE IN TK DOME	8800	0	8800	3.56	313	9113	30	2734	11847
310172	CPAF FAB & INSTALL 12" RISER	13628	0	13628	3.57	486	14114	30	4235	18347
310182	BURNOUT	86923	0	86923	3.56	3094	90017	30	27005	117023
SUBTOTAL 3101	CPAF COST FOR EACH TANK - S	207176	0	207176	3.56	7376	214552	30	64366	278917
SUBTOTAL 31	FA CONST-ONSITE E/C	554947	0	554947	3.56	19757	574704	30	172411	747114
330053	WHC BURIAL CHARGE	137362	0	137362	0.00	0	137362	30	41209	178571
SUBTOTAL 33	CONSTRUCTION-O/C	137362	0	137362	0.00	0	137362	30	41209	178571
SUBTOTAL 3	CONSTRUCTION	692309	0	692309	2.85	19757	712066	30	213620	925685
PROJECT TOTAL		695,849	0	695,849	2.86	19,869	715,718	30	214,716	930,432

1. DOCUMENTS AND DRAWINGS
==========
DOCUMENTS: ENGINEERING STUDY (ISSUE B, MAY 1994)

DRAWINGS: NONE

2. MATERIAL PRICES
==========
UNIT COSTS REPRESENT CURRENT PRICES FOR SPECIFIED MATERIAL.

3. LABOR RATES
==========
CURRENT KEH BASE CRAFT RATES, AS ISSUED BY KEH FINANCE (EFFECTIVE 10-01-93), INCLUDE FRINGE BENEFITS, LABOR INSURANCE, TAXES AND TRAVEL WHERE APPLICABLE, PER HANFORD SITE STABILIZATION AGREEMENT, APPENDIX A (EFFECTIVE 09-06-93). NON CRAFT HOURLY RATES ARE BASED ON THE 1994 FISCAL YEAR BUDGET LIQUIDATION RATES AS ISSUED BY KEH FINANCE (EFFECTIVE 10-01-93).

4. GENERAL REQUIREMENTS/TECHNICAL SERVICES/OVERHEADS
==========
A.) ONSITE CONSTRUCTION FORCES GENERAL REQUIREMENTS, TECHNICAL SERVICES AND CRAFT OVERHEAD COSTS ARE INCLUDED AS A COMPOSITE PERCENTAGE BASED ON THE KEH ESTIMATING FACTOR/BILLING SCHEDULE, REVISION 16, DATED OCTOBER 01, 1993. THE TOTAL COMPOSITE PERCENTAGE APPLIED TO ONSITE CONSTRUCTION FORCES LABOR, FOR THIS PROJECT, IS 94% FOR SHOP WORK AND 136% FOR FIELD WORK, WHICH IS REFLECTED IN THE "OH&P/B&I" COLUMN OF THE ESTIMATE DETAIL.
B.) ONSITE CONTRACT ADMINISTRATION AND CONSTRUCTION MANAGEMENT COSTS, ASSOCIATED WITH THE OVERALL MANAGEMENT OF THE FIXED PRICE CONTRACTS, ARE INCLUDED AS A COMPOSITE PERCENTAGE AND LUMP SUM ALLOWANCE (FOR BID PACKAGE PREP) BASED ON THE ESTIMATING FACTOR/BILLING SCHEDULE. THE TOTAL COMPOSITE PERCENTAGE AND LUMP SUM ALLOWANCE ARE APPLIED AGAINST THE TOTAL FIXED PRICE CONTRACT AMOUNT WHICH IS REFLECTED ON THE KEH SUMMARY REPORT DOER07, INCLUDED WITH THIS ESTIMATE. (FINAL ESTIMATES MAY BE PARTIALLY MANLOADED AND INCLUDED WITHIN THE ESTIMATE DETAIL)

5. ESCALATION
==========
ESCALATION PERCENTAGES WERE CALCULATED BY THE HANFORD MATERIAL & LABOR ESCALATION STUDY, DATED FEBRUARY 1994. ESCALATION HAS BEEN CALCULATED USING JUNE 1994 RATES.

6. ROUNDING
==========
U.S. DEPARTMENT OF ENERGY - DOE ORDER 5100.4 PAGE I-32 SUBPARAGRAPH (M), REQUIRES ROUNDING OF ALL GENERAL PLANT PROJECTS (GPP'S) AND LINE ITEM (LI) COST ESTIMATES. REFERENCE: DOE 5100.4, FIGURE I-11, DATED 10-31-84.

7. REMARKS
==========
A.) ALL CONSTRUCTION IS ESTIMATED AS BY CPAF. E. & I. IS BY CPAF.
B.) NO DESIGN, PROJECT MANAGEMENT, OR WHC PROJECT MANAGEMENT IS INCLUDED.
C.) ALL EXCAVATED DIRT IS BARRELLED & REPLACED.
D.) NO ESCALATION IS APPLIED TO WBS 33 (WASTE BURIAL CHARGE) AS THE COST PER CUBIC FOOT ($173) COMES FROM THE 5 YEAR PROJECTION.

KAISER ENGINEERS HANFORD
WESTINGHOUSE HANFORD COMPANY
JOB NO. Z198 / ER5511
FILE NO. Z198SAC2

** IEST - INTERACTIVE ESTIMATING **
12" RISER IN S.S. TANKS USING CAISSON EXCAV.
STUDY -ADD 12" RISER TO EXISTING SST- 25mr/NONCONGE
DOE_R04 - COST CODE ACCOUNT SUMMARY

DATE 08/01/94 08:54:05
BY SMF, DP

COST CODE/WBS	DESCRIPTION	ESTIMATE SUBTOTAL	ONSITE INDIRECTS	SUB TOTAL	ESCALATION %	ESCALATION TOTAL	SUB TOTAL	CONTINGENCY %	CONTINGENCY TOTAL	TOTAL DOLLARS
000	ENGINEERING									
121001	ENGINEERING/INSPECTION-ONSITE E/C	3540	0	3540	3.16	112	3652	30	1096	4747
TOTAL 000	ENGINEERING	3540	0	3540	3.16	112	3652	30	1096	4747
700	SPECIAL EQUIP/PROCESS SYSTEMS									
310031	CPAF BUILD REUSABLE GREENHOUSE	5605	0	5605	3.57	200	5805	30	1741	7546
310032	CPAF FAB GRNHS HVAC & TK EXHAUSTER	342166	0	342166	3.56	12181	354347	30	106304	460651
310140	SWP AND SAFETY SUPPORT	23763	0	23763	3.56	846	24609	30	7383	31992
310141	CPAF MOVE IN/ SETUP	23758	0	23758	3.56	846	24604	30	7381	31985
310153	CPAF HAND EXCAV. RISER W/ CAISSON	50304	0	50304	3.56	1791	52095	30	15628	67723
310161	CPAF CORE DRILL 12" HOLE IN TK DOME	8800	0	8800	3.56	313	9113	30	2734	11847
310172	CPAF FAB & INSTALL 12" RISER	13628	0	13628	3.57	486	14114	30	4235	18347
310182	BURNOUT	86923	0	86923	3.56	3094	90017	30	27005	117023
330053	WHC BURIAL CHARGE	137362	0	137362	0.00	0	137362	30	41209	178571
TOTAL 700	SPECIAL EQUIP/PROCESS SYSTEM	692309	0	692309	2.85	19757	712066	30	213620	925685
PROJECT TOTAL		695,849	0	695,849	2.86	19,869	715,718	30	214,716	930,432

KAISER ENGINEERS HANFORD
WESTINGHOUSE HANFORD COMPANY
JOB NO. Z198 / ER5511
FILE NO. Z198SAC2

** IEST - INTERACTIVE ESTIMATING **
12" RISER IN S.S. TANKS USING CAISSON EXCAV.
STUDY -ADD 12" RISER TO EXISTING SST- 25mr/NONCONGE
DOE_R05 - ESTIMATE SUMMARY BY CSI DIVISION

DATE 08/01/94 08:54:08
BY SMF, DP

CSI	DESCRIPTION	ESTIMATE SUBTOTAL	ONSITE INDIRECTS	SUB TOTAL	ESCALATION %	ESCALATION TOTAL	SUB TOTAL	CONTINGENCY %	CONTINGENCY TOTAL	TOTAL DOLLARS
ENGINEERING										
00	TECHNICAL SERVICES	3540	0	3540	3.16	112	3652	30	1096	4747
TOTAL ENGINEERING			0			112			1,096	
		3,540		3,540	3.16		3,652	30		4,747
CONSTRUCTION										
02	SITEWORK	336810	0	336810	2.11	7101	343911	30	103173	447084
03	CONCRETE	2861	0	2861	3.57	102	2963	30	889	3852
15	MECHANICAL	352638	0	352638	3.56	12554	365192	30	109558	474749
TOTAL CONSTRUCTION			0			19,757			213,620	
		692,309		692,309	2.85		712,066	30		925,685
PROJECT TOTAL			0			19,869			214,716	
		695,849		695,849	2.86		715,718	30		930,432

REFERENCE: ESTIMATE BASIS SHEET PAGE 3 OF 7
COST CODE ACCOUNT SUMMARY PAGE 4 OF 7

THE U.S. DEPARTMENT OF ENERGY - RICHLAND ORDER 5700.3 "COST ESTIMATING, ANALYSIS AND STANDARDIZATION" DATED 3-27-85, PROVIDES GUIDELINES FOR ESTIMATE CONTINGENCIES. THE GUIDELINE FOR A STUDY ESTIMATE SHOULD HAVE AN OVERALL RANGE OF 20 TO 30% .

CONTINGENCY IS EVALUATED AT THE THIRD COST CODE LEVEL AND SUMMARIZED AT THE PRIMARY AND SECONDARY COST CODE LEVEL OF THE DETAILED COST ESTIMATE.

000 ENGINEERING

121001	ENGINEERING/INSPECTION-ONSITE E/C	30%	CONTINGENCY WAS ADDED AS INSPECTION WILL HAVE SAME PROBLEMS AS CONSTRUCTION

AVERAGE ENGINEERING CONTINGENCY 30%

700 SPECIAL EQUIP/PROCESS SYSTEMS

310031	CPAF BUILD REUSABLE GREENHOUSE	30%	CONTINGENCY WAS ADDED AS DESIGN OF GREENHOUSE COULD VARY
310032	CPAF FAB GRNHS HVAC & TK EXHAUSTER	30	CONTINGENCY WAS ADDED AS SPECIFICATIONS FOR HVAC EQUIPMENT WILL CHANGE
310140	SWP AND SAFETY SUPPORT	30	CONTINGENCY WAS ADDED AS EXACT METHOD AND SCOPE OF WORK EXPECTED IS NOT KNOWN
310141	CPAF MOVE IN/ SETUP	30	CONTINGENCY WAS ADDED AS EXACT METHOD AND SCOPE OF WORK EXPECTED IS NOT KNOWN
310153	CPAF HAND EXCAV. RISER W/ CAISSON	30	CONTINGENCY WAS ADDED AS EXACT METHOD AND SCOPE OF WORK EXPECTED IS NOT KNOWN
310161	CPAF CORE DRILL 12" HOLE IN TK DOME	30	CONTINGENCY WAS ADDED AS EXACT METHOD AND SCOPE OF WORK EXPECTED IS NOT KNOWN
310172	CPAF FAB & INSTALL 12" RISER	30	CONTINGENCY WAS ADDED AS EXACT METHOD AND SCOPE OF WORK EXPECTED IS NOT KNOWN
310182	BURNOUT	30	CONTINGENCY WAS ADDED AS EXACT METHOD AND SCOPE OF WORK EXPECTED IS NOT KNOWN
330053	WHC BURIAL CHARGE	30	CONTINGENCY WAS ADDED AS EXACT METHOD AND SCOPE OF WORK EXPECTED IS NOT KNOWN

TOTAL 700 SPECIAL EQUIP/PROCESS SYSTEM 30

AVERAGE CONSTRUCTION CONTINGENCY 30%

AVERAGE PROJECT CONTINGENCY 30%

KAISER ENGINEERS HANFORD
WESTINGHOUSE HANFORD COMPANY
JOB NO. Z198 / ER5511
FILE NO. Z198SAC2

** IEST - INTERACTIVE ESTIMATING **
12" RISER IN S.S. TANKS USING CAISSON EXCAV.
STUDY -ADD 12" RISER TO EXISTING SST- 25mr/NONCONGE
DOE_R07 - ONSITE INDIRECT COSTS BY WBS

PAGE 7 OF 7
DATE 08/01/94 08:54:10
BY SMF, DP

WBS	DESCRIPTION	ESTIMATE SUBTOTAL	CONTRACT %	ADMINISTRATION TOTAL	BID PACK PREP.	OTHER INDIRECTS	TOTAL INDIRECTS
121001	ENGINEERING/INSPECTION-ONSITE E/C	3540	0.00	0	0	0	0
310031	CPAF BUILD REUSABLE GREENHOUSE	5605	0.00	0	0	0	0
310032	CPAF FAB GRNHS HVAC & TK EXHAUSTER	342166	0.00	0	0	0	0
310140	SWP AND SAFETY SUPPORT	23763	0.00	0	0	0	0
310141	CPAF MOVE IN/ SETUP	23758	0.00	0	0	0	0
310153	CPAF HAND EXCAV. RISER W/ CAISSON	50304	0.00	0	0	0	0
310161	CPAF CORE DRILL 12" HOLE IN TK DOME	8800	0.00	0	0	0	0
310172	CPAF FAB & INSTALL 12" RISER	13628	0.00	0	0	0	0
310182	BURNOUT	86923	0.00	0	0	0	0
330053	WHC BURIAL CHARGE	137362	0.00	0	0	0	0
	PROJECT TOTAL	695,849		0	0	0	0

KAISER ENGINEERS HANFORD
WESTINGHOUSE HANFORD COMPANY
JOB NO. Z198 / ER5511
FILE NO. Z198SEA2

** IEST - INTERACTIVE ESTIMATING **
12"RISER IN S.S. TANKS USING WATERJET & CAISSON
STUDY -ADD 12" RISERS TO EXISTING SST. 25mr/NONCONG
DOE_R01 - PROJECT COST SUMMARY

PAGE 1 OF 7
DATE 07/29/94 15:16:39
BY SMF, DP

COST CODE	DESCRIPTION	ESCALATED TOTAL COST	CONTINGENCY %	CONTINGENCY TOTAL	TOTAL DOLLARS
000	ENGINEERING	4,000	30	1,000	5,000
700	SPECIAL EQUIP/PROCESS SYSTEMS	743,000	30	223,000	966,000
	PROJECT TOTAL	747,000	30	224,000	971,000

TYPE OF ESTIMATE STUDY JULY 29, 1994

ARCHITECT ENGINEER G. Chadwick Chris H Brevick

OPERATING CONTRACTOR C. Detigh-Price 8/10/94

REMARKS:

NO DESIGN OR PROJECT MANAGEMENT IS INCLUDED.

(ROUNDED/ADJUSTED TO THE NEAREST " 1,000 / 10,000 " - PERCENTAGES NOT RECALCULATED TO REFLECT ROUNDING)

WBS	DESCRIPTION	ESTIMATE SUBTOTAL	ONSITE INDIRECTS	SUB TOTAL	ESCALATION %	ESCALATION TOTAL	SUB TOTAL	CONTINGENCY %	CONTINGENCY TOTAL	TOTAL DOLLARS
121001	ENGINEERING/INSPECTION-ONSITE E/C	3540	0	3540	3.16	112	3652	30	1096	4747
SUBTOTAL 121	ENGINEERING/INSPECTION-ONSI	3540	0	3540	3.16	112	3652	30	1096	4747
SUBTOTAL 1	ENGINEERING	3540	0	3540	3.16	112	3652	30	1096	4747
310031	CPAF BUILD REUSABLE GREENHOUSE	5605	0	5605	3.57	200	5805	30	1741	7546
310032	CPAF FAB GRNHS HVAC & TK EXHAUSTER	342166	0	342166	3.56	12181	354347	30	106304	460651
SUBTOTAL 3100	CPAF ONE TIME CONSTR - SUBT	347771	0	347771	3.56	12381	360152	30	108045	468197
310140	SWP AND SAFETY SUPPORT	23763	0	23763	3.56	846	24609	30	7383	31992
310141	CPAF MOVE IN/ SETUP	23758	0	23758	3.56	846	24604	30	7381	31985
310153	CPAF HAND EXCAV. RISER W/ CAISSON	50304	0	50304	3.56	1791	52095	30	15628	67723
310161	CPAF CORE DRILL 12" HOLE IN TK DOME	8800	0	8800	3.56	313	9113	30	2734	11847
310172	CPAF FAB & INSTALL 12" RISER	13628	0	13628	3.57	486	14114	30	4235	18347
310182	BURNOUT	449085	0	449085	3.56	15987	465072	30	139522	604594
SUBTOTAL 3101	CPAF COST FOR EACH TANK - S	569338	0	569338	3.56	20269	589607	30	176883	766488
SUBTOTAL 31	FA CONST-ONSITE E/C	917109	0	917109	3.56	32650	949759	30	284928	1234685
330053	WHC BURIAL CHARGE	137362	0	137362	0.00	0	137362	30	41209	178571
SUBTOTAL 33	CONSTRUCTION-O/C	137362	0	137362	0.00	0	137362	30	41209	178571
SUBTOTAL 3	CONSTRUCTION	1054471	0	1054471	3.10	32650	1087121	30	326137	1413256
PROJECT TOTAL		1,058,011	0	1,058,011	3.10	32,762	1,090,773	30	327,233	1,418,003

1. DOCUMENTS AND DRAWINGS

DOCUMENTS: ENGINEERING STUDY (ISSUE B, MAY 1994).

DRAWINGS: NONE

2. MATERIAL PRICES

UNIT COSTS REPRESENT CURRENT PRICES FOR SPECIFIED MATERIAL.

3. LABOR RATES

CURRENT KEH BASE CRAFT RATES, AS ISSUED BY KEH FINANCE (EFFECTIVE 10-01-93), INCLUDE FRINGE BENEFITS, LABOR INSURANCE, TAXES AND TRAVEL WHERE APPLICABLE, PER HANFORD SITE STABILIZATION AGREEMENT, APPENDIX A (EFFECTIVE 09-06-93). NON CRAFT HOURLY RATES ARE BASED ON THE 1994 FISCAL YEAR BUDGET LIQUIDATION RATES AS ISSUED BY KEH FINANCE (EFFECTIVE 10-01-93).

4. GENERAL REQUIREMENTS/TECHNICAL SERVICES/OVERHEADS

A.) ONSITE CONSTRUCTION FORCES GENERAL REQUIREMENTS, TECHNICAL SERVICES AND CRAFT OVERHEAD COSTS ARE INCLUDED AS A COMPOSITE PERCENTAGE BASED ON THE KEH ESTIMATING FACTOR/BILLING SCHEDULE, REVISION 16, DATED OCTOBER 01, 1993. THE TOTAL COMPOSITE PERCENTAGE APPLIED TO ONSITE CONSTRUCTION FORCES LABOR, FOR THIS PROJECT, IS 94% FOR SHOP WORK AND 136% FOR FIELD WORK, WHICH IS REFLECTED IN THE "OH&P/B&I" COLUMN OF THE ESTIMATE DETAIL.

B.) ONSITE CONTRACT ADMINISTRATION AND CONSTRUCTION MANAGEMENT COSTS, ASSOCIATED WITH THE OVERALL MANAGEMENT OF THE FIXED PRICE CONTRACTS, ARE INCLUDED AS A COMPOSITE PERCENTAGE AND LUMP SUM ALLOWANCE (FOR BID PACKAGE PREP) BASED ON THE ESTIMATING FACTOR/BILLING SCHEDULE. THE TOTAL COMPOSITE PERCENTAGE AND LUMP SUM ALLOWANCE ARE APPLIED AGAINST THE TOTAL FIXED PRICE CONTRACT AMOUNT WHICH IS REFLECTED ON THE KEH SUMMARY REPORT DOER07, INCLUDED WITH THIS ESTIMATE. (FINAL ESTIMATES MAY BE PARTIALLY MANLOADED AND INCLUDED WITHIN THE ESTIMATE DETAIL)

5. ESCALATION

ESCALATION PERCENTAGES WERE CALCULATED BY THE HANFORD MATERIAL & LABOR ESCALATION STUDY, DATED FEBRUARY 1994. ESCALATION HAS BEEN CALCULATED USING JUNE 1994 RATES.

6. ROUNDING

U.S. DEPARTMENT OF ENERGY - DOE ORDER 5100.4 PAGE I-32 SUBPARAGRAPH (M), REQUIRES ROUNDING OF ALL GENERAL PLANT PROJECTS (GPP'S) AND LINE ITEM (LI) COST ESTIMATES. REFERENCE: DOE 5100.4, FIGURE I-11, DATED 10-31-84.

7. REMARKS

A.) ALL CONSTRUCTION IS ESTIMATED AS BY CPAF. E. & I. IS BY CPAF.
B.) NO DESIGN, PROJECT MANAGEMENT, OR WHC PROJECT MANAGEMENT IS INCLUDED.
C.) ALL EXCAVATED DIRT IS BARRELLED & REPLACED.
D.) NO ESCALATION IS APPLIED TO WBS 33 (WASTE BURIAL CHARGE) AS THE COST PER CUBIC FOOT ($173) COMES FROM THE 5 YEAR PROJECTION.

KAISER ENGINEERS HANFORD
WESTINGHOUSE HANFORD COMPANY
JOB NO. Z198 / ER5511
FILE NO. Z198SCB2

** IEST - INTERACTIVE ESTIMATING **
12" RISER IN S.S. TANKS USING CAISSON EXCAV.
STUDY -ADD 12" RISER TO EXISTING SST-100mr/NONCONGE
DOE_R04 - COST CODE ACCOUNT SUMMARY

PAGE 4 OF 7
DATE 07/29/94 12:55:47
BY SMF, DP

COST CODE/WBS	DESCRIPTION	ESTIMATE SUBTOTAL	ONSITE INDIRECTS	SUB TOTAL	ESCALATION %	ESCALATION TOTAL	SUB TOTAL	CONTINGENCY %	CONTINGENCY TOTAL	TOTAL DOLLARS
000	ENGINEERING									
121001	ENGINEERING/INSPECTION-ONSITE E/C	3540	0	3540	3.16	112	3652	30	1096	4747
TOTAL 000	ENGINEERING	3540	0	3540	3.16	112	3652	30	1096	4747
700	SPECIAL EQUIP/PROCESS SYSTEMS									
310031	CPAF BUILD REUSABLE GREENHOUSE	5605	0	5605	3.57	200	5805	30	1741	7546
310032	CPAF FAB GRNHS HVAC & TK EXHAUSTER	342166	0	342166	3.56	12181	354347	30	106304	460651
310140	SWP AND SAFETY SUPPORT	23763	0	23763	3.56	846	24609	30	7383	31992
310141	CPAF MOVE IN/ SETUP	23758	0	23758	3.56	846	24604	30	7381	31985
310153	CPAF HAND EXCAV. RISER W/ CAISSON	50304	0	50304	3.56	1791	52095	30	15628	67723
310161	CPAF CORE DRILL 12" HOLE IN TK DOME	8800	0	8800	3.56	313	9113	30	2734	11847
310172	CPAF FAB & INSTALL 12" RISER	13628	0	13628	3.57	486	14114	30	4235	18347
310182	BURNOUT	449085	0	449085	3.56	15987	465072	30	139522	604594
330053	WHC BURIAL CHARGE	137362	0	137362	0.00	0	137362	30	41209	178571
TOTAL 700	SPECIAL EQUIP/PROCESS SYSTEM	1054471	0	1054471	3.10	32650	1087121	30	326137	1413256
PROJECT TOTAL		1,058,011	0	1,058,011	3.10	32,762	1,090,773	30	327,233	1,418,003

KAISER ENGINEERS HANFORD
WESTINGHOUSE HANFORD COMPANY
JOB NO. Z198 / ER5511
FILE NO. Z198SCB2

** IEST - INTERACTIVE ESTIMATING **
12" RISER IN S.S. TANKS USING CAISSON EXCAV.
STUDY -ADD 12" RISER TO EXISTING SST-100mr/NONCONGE
DOE_R05 - ESTIMATE SUMMARY BY CSI DIVISION

DATE 07/29/94 12:55:49
BY SMF, DP

CSI	DESCRIPTION	ESTIMATE SUBTOTAL	ONSITE INDIRECTS	SUB TOTAL	ESCALATION %	ESCALATION TOTAL	SUB TOTAL	CONTINGENCY %	CONTINGENCY TOTAL	TOTAL DOLLARS
ENGINEERING										
00	TECHNICAL SERVICES	3540	0	3540	3.16	112	3652	30	1096	4747
	TOTAL ENGINEERING	3,540	0	3,540	3.16	112	3,652	30	1,096	4,747
CONSTRUCTION										
02	SITEWORK	698972	0	698972	2.86	19994	718966	30	215690	934655
03	CONCRETE	2861	0	2861	3.57	102	2963	30	889	3852
15	MECHANICAL	352638	0	352638	3.56	12554	365192	30	109558	474749
	TOTAL CONSTRUCTION	1,054,471	0	1,054,471	3.10	32,650	1,087,121	30	326,137	1,413,256
PROJECT TOTAL		1,058,011	0	1,058,011	3.10	32,762	1,090,773	30	327,233	1,418,003

REFERENCE: ESTIMATE BASIS SHEET PAGE 3 OF 7
COST CODE ACCOUNT SUMMARY PAGE 4 OF 7

THE U.S. DEPARTMENT OF ENERGY - RICHLAND ORDER 5700.3 "COST ESTIMATING, ANALYSIS AND STANDARDIZATION" DATED 3-27-85, PROVIDES GUIDELINES FOR ESTIMATE CONTINGENCIES. THE GUIDELINE FOR A STUDY ESTIMATE SHOULD HAVE AN OVERALL RANGE OF 20 TO 30% .

CONTINGENCY IS EVALUATED AT THE THIRD COST CODE LEVEL AND SUMMARIZED AT THE PRIMARY AND SECONDARY COST CODE LEVEL OF THE DETAILED COST ESTIMATE.

000 ENGINEERING

121001	ENGINEERING/INSPECTION-ONSITE E/C	30%	CONTINGENCY WAS ADDED AS INSPECTION WILL HAVE SAME PROBLEMS AS CONSTRUCTION

AVERAGE ENGINEERING CONTINGENCY 30%

700 SPECIAL EQUIP/PROCESS SYSTEMS

310031	CPAF BUILD REUSABLE GREENHOUSE	30%	CONTINGENCY WAS ADDED AS DESIGN OF GREENHOUSE COULD VARY
310032	CPAF FAB GRNHS HVAC & TK EXHAUSTER	30	CONTINGENCY WAS ADDED AS SPECIFICATIONS FOR HVAC EQUIPMENT WILL CHANGE
310140	SWP AND SAFETY SUPPORT	30	CONTINGENCY WAS ADDED AS EXACT METHOD AND SCOPE OF WORK EXPECTED IS NOT KNOWN
310141	CPAF MOVE IN/ SETUP	30	CONTINGENCY WAS ADDED AS EXACT METHOD AND SCOPE OF WORK EXPECTED IS NOT KNOWN
310153	CPAF HAND EXCAV. RISER W/ CAISSON	30	CONTINGENCY WAS ADDED AS EXACT METHOD AND SCOPE OF WORK EXPECTED IS NOT KNOWN
310161	CPAF CORE DRILL 12" HOLE IN TK DOME	30	CONTINGENCY WAS ADDED AS EXACT METHOD AND SCOPE OF WORK EXPECTED IS NOT KNOWN
310172	CPAF FAB & INSTALL 12" RISER	30	CONTINGENCY WAS ADDED AS EXACT METHOD AND SCOPE OF WORK EXPECTED IS NOT KNOWN
310182	BURNOUT	30	CONTINGENCY WAS ADDED AS EXACT METHOD AND SCOPE OF WORK EXPECTED IS NOT KNOWN
330053	WHC BURIAL CHARGE	30	CONTINGENCY WAS ADDED AS EXACT METHOD AND SCOPE OF WORK EXPECTED IS NOT KNOWN

TOTAL 700 SPECIAL EQUIP/PROCESS SYSTEM 30

AVERAGE CONSTRUCTION CONTINGENCY 30%

AVERAGE PROJECT CONTINGENCY 30%

KAISER ENGINEERS HANFORD
WESTINGHOUSE HANFORD COMPANY
JOB NO. Z198 / ER5511
FILE NO. Z198SCB2

** IEST - INTERACTIVE ESTIMATING **
12" RISER IN S.S. TANKS USING CAISSON EXCAV.
STUDY -ADD 12" RISER TO EXISTING SST-100mr/NONCONGE
DOE_R07 - ONSITE INDIRECT COSTS BY WBS

PAGE 7 OF 7
DATE 07/29/94 12:55:52
BY SMF, DP

WBS	DESCRIPTION	ESTIMATE SUBTOTAL	CONTRACT %	ADMINISTRATION TOTAL	BID PACK PREP.	OTHER INDIRECTS	TOTAL INDIRECTS
121001	ENGINEERING/INSPECTION-ONSITE E/C	3540	0.00	0	0	0	0
310031	CPAF BUILD REUSABLE GREENHOUSE	5605	0.00	0	0	0	0
310032	CPAF FAB GRNHS HVAC & TK EXHAUSTER	342166	0.00	0	0	0	0
310140	SWP AND SAFETY SUPPORT	23763	0.00	0	0	0	0
310141	CPAF MOVE IN/ SETUP	23758	0.00	0	0	0	0
310153	CPAF HAND EXCAV. RISER W/ CAISSON	50304	0.00	0	0	0	0
310161	CPAF CORE DRILL 12" HOLE IN TK DOME	8800	0.00	0	0	0	0
310172	CPAF FAB & INSTALL 12" RISER	13628	0.00	0	0	0	0
310182	BURNOUT	449085	0.00	0	0	0	0
330053	WHC BURIAL CHARGE	137362	0.00	0	0	0	0
	PROJECT TOTAL	1,058,011		0	0	0	0

KAISER ENGINEERS HANFORD
WESTINGHOUSE HANFORD COMPANY
JOB NO. Z198 / ER5511
FILE NO. Z198SFA2

** IEST - INTERACTIVE ESTIMATING **
12" RISER IN S.S. TANKS USING STRADDLE CRANE
STUDY -ADD 12" RISER TO EXISTING SST - 25mr VERSION
DOE_R01 - PROJECT COST SUMMARY

DATE 07/29/94 07:30:01
BY SMF/ DP

COST CODE	DESCRIPTION	ESCALATED TOTAL COST	CONTINGENCY %	CONTINGENCY TOTAL	TOTAL DOLLARS
000	ENGINEERING	4,000	30	1,000	5,000
700	SPECIAL EQUIP/PROCESS SYSTEMS	1,592,000	30	477,000	2,069,000
	PROJECT TOTAL	1,596,000	30	478,000	2,074,000

TYPE OF ESTIMATE STUDY JULY 29, 1994

ARCHITECT ENGINEER G Chadwick Chris H Brevick

OPERATING CONTRACTOR C. DeFigh-Price 8-10-94

REMARKS:

NO DESIGN OR PROJECT MANAGEMENT IS INCLUDED.

(ROUNDED/ADJUSTED TO THE NEAREST " 1,000 / 10,000 " - PERCENTAGES NOT RECALCULATED TO REFLECT ROUNDING)

KAISER ENGINEERS HANFORD
WESTINGHOUSE HANFORD COMPANY
JOB NO. Z198 / ER5511
FILE NO. Z198SCC2

** IEST - INTERACTIVE ESTIMATING **
12" RISER IN S.S. TANKS USING CAISSON EXCAV.
STUDY -ADD 12" RISER TO EXISTING SST-500mr/NONCONGE
DOE_R02 - WORK BREAKDOWN STRUCTURE SUMMARY

DATE 07/29/94 13:39:10
BY SMF, DP

WBS	DESCRIPTION	ESTIMATE SUBTOTAL	ONSITE INDIRECTS	SUB TOTAL	ESCALATION %	ESCALATION TOTAL	SUB TOTAL	CONTINGENCY %	CONTINGENCY TOTAL	TOTAL DOLLARS
121001	ENGINEERING/INSPECTION-ONSITE E/C	3540	0	3540	3.16	112	3652	30	1096	4747
SUBTOTAL 121	ENGINEERING/INSPECTION-ONSI	3540	0	3540	3.16	112	3652	30	1096	4747
SUBTOTAL 1	ENGINEERING	3540	0	3540	3.16	112	3652	30	1096	4747
310031	CPAF BUILD REUSABLE GREENHOUSE	5605	0	5605	3.57	200	5805	30	1741	7546
310032	CPAF FAB GRNHS HVAC & TK EXHAUSTER	342166	0	342166	3.56	12181	354347	30	106304	460651
SUBTOTAL 3100	CPAF ONE TIME CONSTR - SUBT	347771	0	347771	3.56	12381	360152	30	108045	468197
310140	SWP AND SAFETY SUPPORT	23763	0	23763	3.56	846	24609	30	7383	31992
310141	CPAF MOVE IN/ SETUP	23758	0	23758	3.56	846	24604	30	7381	31985
310153	CPAF HAND EXCAV. RISER W/ CAISSON	50304	0	50304	3.56	1791	52095	30	15628	67723
310161	CPAF CORE DRILL 12" HOLE IN TK DOME	8800	0	8800	3.56	313	9113	30	2734	11847
310172	CPAF FAB & INSTALL 12" RISER	13628	0	13628	3.57	486	14114	30	4235	18347
310182	BURNOUT	2381490	0	2381490	3.56	84781	2466271	30	739881	3206152
SUBTOTAL 3101	CPAF COST FOR EACH TANK - S	2501743	0	2501743	3.56	89063	2590806	30	777242	3368046
SUBTOTAL 31	FA CONST-ONSITE E/C	2849514	0	2849514	3.56	101444	2950958	30	885287	3836243
330053	WHC BURIAL CHARGE	137362	0	137362	0.00	0	137362	30	41209	178571
SUBTOTAL 33	CONSTRUCTION-O/C	137362	0	137362	0.00	0	137362	30	41209	178571
SUBTOTAL 3	CONSTRUCTION	2986876	0	2986876	3.40	101444	3088320	30	926496	4014814
PROJECT TOTAL		2,990,416	0	2,990,416	3.40	101,556	3,091,972	30	927,592	4,019,561

1. DOCUMENTS AND DRAWINGS
   ==========
   DOCUMENTS: ENGINEERING STUDY (ISSUE B, MAY 1994)

   DRAWINGS: NONE

2. MATERIAL PRICES
   ==========
   UNIT COSTS REPRESENT CURRENT PRICES FOR SPECIFIED MATERIAL.

3. LABOR RATES
   ==========
   CURRENT KEH BASE CRAFT RATES, AS ISSUED BY KEH FINANCE (EFFECTIVE 10-01-93), INCLUDE FRINGE BENEFITS, LABOR INSURANCE, TAXES AND TRAVEL WHERE APPLICABLE, PER HANFORD SITE STABILIZATION AGREEMENT, APPENDIX A (EFFECTIVE 09-06-93). NON CRAFT HOURLY RATES ARE BASED ON THE 1994 FISCAL YEAR BUDGET LIQUIDATION RATES AS ISSUED BY KEH FINANCE (EFFECTIVE 10-01-93).

4. GENERAL REQUIREMENTS/TECHNICAL SERVICES/OVERHEADS
   ==========
   A.) ONSITE CONSTRUCTION FORCES GENERAL REQUIREMENTS, TECHNICAL SERVICES AND CRAFT OVERHEAD COSTS ARE INCLUDED AS A COMPOSITE PERCENTAGE BASED ON THE KEH ESTIMATING FACTOR/BILLING SCHEDULE, REVISION 16, DATED OCTOBER 01, 1993. THE TOTAL COMPOSITE PERCENTAGE APPLIED TO ONSITE CONSTRUCTION FORCES LABOR, FOR THIS PROJECT, IS 94% FOR SHOP WORK AND 136% FOR FIELD WORK, WHICH IS REFLECTED IN THE "OH&P/B&I" COLUMN OF THE ESTIMATE DETAIL.
   B.) ONSITE CONTRACT ADMINISTRATION AND CONSTRUCTION MANAGEMENT COSTS, ASSOCIATED WITH THE OVERALL MANAGEMENT OF THE FIXED PRICE CONTRACTS, ARE INCLUDED AS A COMPOSITE PERCENTAGE AND LUMP SUM ALLOWANCE (FOR BID PACKAGE PREP) BASED ON THE ESTIMATING FACTOR/BILLING SCHEDULE. THE TOTAL COMPOSITE PERCENTAGE AND LUMP SUM ALLOWANCE ARE APPLIED AGAINST THE TOTAL FIXED PRICE CONTRACT AMOUNT WHICH IS REFLECTED ON THE KEH SUMMARY REPORT DOER07, INCLUDED WITH THIS ESTIMATE. (FINAL ESTIMATES MAY BE PARTIALLY MANLOADED AND INCLUDED WITHIN THE ESTIMATE DETAIL)

5. ESCALATION
   ==========
   ESCALATION PERCENTAGES WERE CALCULATED BY THE HANFORD MATERIAL & LABOR ESCALATION STUDY, DATED FEBRUARY 1994. ESCALATION HAS BEEN CALCULATED USING JUNE 1994 RATES.

6. ROUNDING
   ==========
   U.S. DEPARTMENT OF ENERGY - DOE ORDER 5100.4 PAGE I-32 SUBPARAGRAPH (M), REQUIRES ROUNDING OF ALL GENERAL PLANT PROJECTS (GPP'S) AND LINE ITEM (LI) COST ESTIMATES. REFERENCE: DOE 5100.4, FIGURE I-11, DATED 10-31-84.

7. REMARKS
   ==========
   A.) ALL CONSTRUCTION IS ESTIMATED AS BY CPAF. E. & I. IS BY CPAF.
   B.) NO DESIGN, PROJECT MANAGEMENT, OR WHC PROJECT MANAGEMENT IS INCLUDED.
   C.) ALL EXCAVATED DIRT IS BARRELLED & REPLACED.
   D.) NO ESCALATION IS APPLIED TO WBS 33 (WASTE BURIAL CHARGE) AS THE COST PER CUBIC FOOT ($173) COMES FROM THE 5 YEAR PROJECTION.

KAISER ENGINEERS HANFORD
WESTINGHOUSE HANFORD COMPANY
JOB NO. Z198 / ER5511
FILE NO. Z198SCC2

** IEST - INTERACTIVE ESTIMATING **
12" RISER IN S.S. TANKS USING CAISSON EXCAV.
STUDY -ADD 12" RISER TO EXISTING SST-500mr/NONCONGE
DOE_R04 - COST CODE ACCOUNT SUMMARY

DATE 07/29/94 13:39:12
BY SMF, DP

COST CODE/WBS	DESCRIPTION	ESTIMATE SUBTOTAL	ONSITE INDIRECTS	SUB TOTAL	ESCALATION %	ESCALATION TOTAL	SUB TOTAL	CONTINGENCY %	CONTINGENCY TOTAL	TOTAL DOLLARS
000	ENGINEERING									
121001	ENGINEERING/INSPECTION-ONSITE E/C	3540	0	3540	3.16	112	3652	30	1096	4747
TOTAL 000	ENGINEERING	3540	0	3540	3.16	112	3652	30	1096	4747
700	SPECIAL EQUIP/PROCESS SYSTEMS									
310031	CPAF BUILD REUSABLE GREENHOUSE	5605	0	5605	3.57	200	5805	30	1741	7546
310032	CPAF FAB GRNHS HVAC & TK EXHAUSTER	342166	0	342166	3.56	12181	354347	30	106304	460651
310140	SWP AND SAFETY SUPPORT	23763	0	23763	3.56	846	24609	30	7383	31992
310141	CPAF MOVE IN/ SETUP	23758	0	23758	3.56	846	24604	30	7381	31985
310153	CPAF HAND EXCAV. RISER W/ CAISSON	50304	0	50304	3.56	1791	52095	30	15628	67723
310161	CPAF CORE DRILL 12" HOLE IN TK DOME	8800	0	8800	3.56	313	9113	30	2734	11847
310172	CPAF FAB & INSTALL 12" RISER	13628	0	13628	3.57	486	14114	30	4235	18347
310182	BURNOUT	2381490	0	2381490	3.56	84781	2466271	30	739881	3206152
330053	WHC BURIAL CHARGE	137362	0	137362	0.00	0	137362	30	41209	178571
TOTAL 700	SPECIAL EQUIP/PROCESS SYSTEM	2986876	0	2986876	3.40	101444	3088320	30	926496	4014814
PROJECT TOTAL		2,990,416	0	2,990,416	3.40	101,556	3,091,972	30	927,592	4,019,561

KAISER ENGINEERS HANFORD
WESTINGHOUSE HANFORD COMPANY
JOB NO. Z198 / ER5511
FILE NO. Z198SCC2

** IEST - INTERACTIVE ESTIMATING **
12" RISER IN S.S. TANKS USING CAISSON EXCAV.
STUDY -ADD 12" RISER TO EXISTING SST-500mr/NONCONGE
DOE_R05 - ESTIMATE SUMMARY BY CSI DIVISION

DATE 07/29/94 13:39:15
BY SMF, DP

CSI	DESCRIPTION	ESTIMATE SUBTOTAL	ONSITE INDIRECTS	SUB TOTAL	ESCALATION %	ESCALATION TOTAL	SUB TOTAL	CONTINGENCY %	CONTINGENCY TOTAL	TOTAL DOLLARS
ENGINEERING										
00	TECHNICAL SERVICES	3540	0	3540	3.16	112	3652	30	1096	4747
	TOTAL ENGINEERING	3,540	0	3,540	3.16	112	3,652	30	1,096	4,747
CONSTRUCTION										
02	SITEWORK	2631377	0	2631377	3.37	88788	2720165	30	816049	3536213
03	CONCRETE	2861	0	2861	3.57	102	2963	30	889	3852
15	MECHANICAL	352638	0	352638	3.56	12554	365192	30	109558	474749
	TOTAL CONSTRUCTION	2,986,876	0	2,986,876	3.40	101,444	3,088,320	30	926,496	4,014,814
PROJECT TOTAL		2,990,416	0	2,990,416	3.40	101,556	3,091,972	30	927,592	4,019,561

REFERENCE: ESTIMATE BASIS SHEET — PAGE 3 OF 7
COST CODE ACCOUNT SUMMARY — PAGE 4 OF 7

THE U.S. DEPARTMENT OF ENERGY - RICHLAND ORDER 5700.3 "COST ESTIMATING, ANALYSIS AND STANDARDIZATION" DATED 3-27-85, PROVIDES GUIDELINES FOR ESTIMATE CONTINGENCIES. THE GUIDELINE FOR A STUDY ESTIMATE SHOULD HAVE AN OVERALL RANGE OF 20 TO 30% .

CONTINGENCY IS EVALUATED AT THE THIRD COST CODE LEVEL AND SUMMARIZED AT THE PRIMARY AND SECONDARY COST CODE LEVEL OF THE DETAILED COST ESTIMATE.

000 ENGINEERING

121001	ENGINEERING/INSPECTION-ONSITE E/C	30%	CONTINGENCY WAS ADDED AS INSPECTION WILL HAVE SAME PROBLEMS AS CONSTRUCTION

AVERAGE ENGINEERING CONTINGENCY 30%

700 SPECIAL EQUIP/PROCESS SYSTEMS

310031	CPAF BUILD REUSABLE GREENHOUSE	30%	CONTINGENCY WAS ADDED AS DESIGN OF GREENHOUSE COULD VARY
310032	CPAF FAB GRNHS HVAC & TK EXHAUSTER	30	CONTINGENCY WAS ADDED AS SPECIFICATIONS FOR HVAC EQUIPMENT WILL CHANGE
310140	SWP AND SAFETY SUPPORT	30	CONTINGENCY WAS ADDED AS EXACT METHOD AND SCOPE OF WORK EXPECTED IS NOT KNOWN
310141	CPAF MOVE IN/ SETUP	30	CONTINGENCY WAS ADDED AS EXACT METHOD AND SCOPE OF WORK EXPECTED IS NOT KNOWN
310153	CPAF HAND EXCAV. RISER W/ CAISSON	30	CONTINGENCY WAS ADDED AS EXACT METHOD AND SCOPE OF WORK EXPECTED IS NOT KNOWN
310161	CPAF CORE DRILL 12" HOLE IN TK DOME	30	CONTINGENCY WAS ADDED AS EXACT METHOD AND SCOPE OF WORK EXPECTED IS NOT KNOWN
310172	CPAF FAB & INSTALL 12" RISER	30	CONTINGENCY WAS ADDED AS EXACT METHOD AND SCOPE OF WORK EXPECTED IS NOT KNOWN
310182	BURNOUT	30	CONTINGENCY WAS ADDED AS EXACT METHOD AND SCOPE OF WORK EXPECTED IS NOT KNOWN
330053	WHC BURIAL CHARGE	30	CONTINGENCY WAS ADDED AS EXACT METHOD AND SCOPE OF WORK EXPECTED IS NOT KNOWN

TOTAL 700 SPECIAL EQUIP/PROCESS SYSTEM 30

AVERAGE CONSTRUCTION CONTINGENCY 30%

AVERAGE PROJECT CONTINGENCY 30%

KAISER ENGINEERS HANFORD
WESTINGHOUSE HANFORD COMPANY
JOB NO. Z198 / ER5511
FILE NO. Z198SCC2

** IEST - INTERACTIVE ESTIMATING **
12" RISER IN S.S. TANKS USING CAISSON EXCAV.
STUDY -ADD 12" RISER TO EXISTING SST-500mr/NONCONGE
DOE_R07 - ONSITE INDIRECT COSTS BY WBS

DATE 07/29/94 13:39:17
BY SMF, DP

WBS	DESCRIPTION	ESTIMATE SUBTOTAL	CONTRACT %	ADMINISTRATION TOTAL	BID PACK PREP.	OTHER INDIRECTS	TOTAL INDIRECTS
121001	ENGINEERING/INSPECTION-ONSITE E/C	3540	0.00	0	0	0	0
310031	CPAF BUILD REUSABLE GREENHOUSE	5605	0.00	0	0	0	0
310032	CPAF FAB GRNHS HVAC & TK EXHAUSTER	342166	0.00	0	0	0	0
310140	SWP AND SAFETY SUPPORT	23763	0.00	0	0	0	0
310141	CPAF MOVE IN/ SETUP	23758	0.00	0	0	0	0
310153	CPAF HAND EXCAV. RISER W/ CAISSON	50304	0.00	0	0	0	0
310161	CPAF CORE DRILL 12" HOLE IN TK DOME	8800	0.00	0	0	0	0
310172	CPAF FAB & INSTALL 12" RISER	13628	0.00	0	0	0	0
310182	BURNOUT	2381490	0.00	0	0	0	0
330053	WHC BURIAL CHARGE	137362	0.00	0	0	0	0
	PROJECT TOTAL	2,990,416		0	0	0	0

KAISER ENGINEERS HANFORD
WESTINGHOUSE HANFORD COMPANY
JOB NO. Z198 / ER5511
FILE NO. Z198SAD2

** IEST - INTERACTIVE ESTIMATING **
NEW 12" RISER IN S.S. TANKS USING SLOPED EXCAV.
STUDY-ADD 12" RISERS TO EXISTING SST. 25mr/ CONGEST
DOE_R01 - PROJECT COST SUMMARY

DATE 07/29/94 13:57:44
BY SMF, DP

COST CODE	DESCRIPTION	ESCALATED TOTAL COST	CONTINGENCY %	CONTINGENCY TOTAL	TOTAL DOLLARS
000	ENGINEERING	4,000	30	1,000	5,000
700	SPECIAL EQUIP/PROCESS SYSTEMS	1,845,000	30	553,000	2,398,000
	PROJECT TOTAL	1,849,000	30	554,000	2,403,000

TYPE OF ESTIMATE STUDY JULY 29, 1994

ARCHITECT ENGINEER G. Chadwick Chris H Brevick

OPERATING CONTRACTOR C. DeFigh-Price 8/10/94

REMARKS:

NO DESIGN OR PROJECT MANAGEMENT IS INCLUDED.

(ROUNDED/ADJUSTED TO THE NEAREST " 1,000 / 10,000 " - PERCENTAGES NOT RECALCULATED TO REFLECT ROUNDING)

KAISER ENGINEERS HANFORD
WESTINGHOUSE HANFORD COMPANY
JOB NO. Z198 / ER5511
FILE NO. Z198SDA2

** IEST - INTERACTIVE ESTIMATING **
12" RISER IN S.S. TANKS USING ROTARY DRILL
STUDY -ADD 12" RISER TO EXISTING SST- 25mr VERSION
DOE_R02 - WORK BREAKDOWN STRUCTURE SUMMARY

DATE 07/27/94 08:28:25
BY SMF, DP

WBS	DESCRIPTION	ESTIMATE SUBTOTAL	ONSITE INDIRECTS	SUB TOTAL	ESCALATION %	ESCALATION TOTAL	SUB TOTAL	CONTINGENCY %	CONTINGENCY TOTAL	TOTAL DOLLARS
121001	ENGINEERING/INSPECTION-ONSITE E/C	3540	0	3540	3.16	112	3652	30	1096	4747
SUBTOTAL 121	ENGINEERING/INSPECTION-ONSI	3540	0	3540	3.16	112	3652	30	1096	4747
SUBTOTAL 1	ENGINEERING	3540	0	3540	3.16	112	3652	30	1096	4747
310031	CPAF BUILD REUSABLE GREENHOUSE	5605	0	5605	3.57	200	5805	30	1741	7546
310032	CPAF BUILD REUSABLE HVAC /EXHAUSTER	342166	0	342166	3.56	12181	354347	30	106304	460651
SUBTOTAL 3100	CPAF ONE TIME CONSTR - SUBT	347771	0	347771	3.56	12381	360152	30	108045	468197
310140	SWP AND SAFETY SUPPORT	22117	0	22117	3.56	787	22904	30	6871	29776
310141	CPAF MOVE IN/ SETUP	23867	0	23867	3.56	850	24717	30	7415	32132
310162	CPAF CORE DRILL W/ ROTARY DRILL RIG	46952	0	46952	3.56	1672	48624	30	14587	63210
310172	CPAF FAB & INSTALL 12" RISER	13628	0	13628	3.57	486	14114	30	4235	18347
310182	BURNOUT	83855	0	83855	3.56	2985	86840	30	26052	112892
SUBTOTAL 3101	CPAF COST FOR EACH TANK - S	190419	0	190419	3.56	6780	197199	30	59160	256357
SUBTOTAL 31	FA CONST-ONSITE E/C	538190	0	538190	3.56	19161	557351	30	167205	724554
330062	WHC BURIAL CHARGES	6401	0	6401	0.00	0	6401	30	1920	8321
SUBTOTAL 33	CONSTRUCTION-O/C	6401	0	6401	0.00	0	6401	30	1920	8321
SUBTOTAL 3	CONSTRUCTION	544591	0	544591	3.52	19161	563752	30	169125	732875
PROJECT TOTAL		548,131	0	548,131	3.52	19,273	567,404	30	170,221	737,622

1. DOCUMENTS AND DRAWINGS

DOCUMENTS: ENGINEERING STUDY (ISSUE B, MAY 1994)

DRAWINGS: NONE

2. MATERIAL PRICES

UNIT COSTS REPRESENT CURRENT PRICES FOR SPECIFIED MATERIAL.

3. LABOR RATES

CURRENT KEH BASE CRAFT RATES, AS ISSUED BY KEH FINANCE (EFFECTIVE 10-01-93), INCLUDE FRINGE BENEFITS, LABOR INSURANCE, TAXES AND TRAVEL WHERE APPLICABLE, PER HANFORD SITE STABILIZATION AGREEMENT, APPENDIX A (EFFECTIVE 09-06-93). NON CRAFT HOURLY RATES ARE BASED ON THE 1994 FISCAL YEAR BUDGET LIQUIDATION RATES AS ISSUED BY KEH FINANCE (EFFECTIVE 10-01-93).

4. GENERAL REQUIREMENTS/TECHNICAL SERVICES/OVERHEADS

A.) ONSITE CONSTRUCTION FORCES GENERAL REQUIREMENTS, TECHNICAL SERVICES AND CRAFT OVERHEAD COSTS ARE INCLUDED AS A COMPOSITE PERCENTAGE BASED ON THE KEH ESTIMATING FACTOR/BILLING SCHEDULE, REVISION 16, DATED OCTOBER 01, 1993. THE TOTAL COMPOSITE PERCENTAGE APPLIED TO ONSITE CONSTRUCTION FORCES LABOR, FOR THIS PROJECT, IS 94% FOR SHOP WORK AND 136% FOR FIELD WORK, WHICH IS REFLECTED IN THE "OH&P/B&I" COLUMN OF THE ESTIMATE DETAIL.

B.) ONSITE CONTRACT ADMINISTRATION AND CONSTRUCTION MANAGEMENT COSTS, ASSOCIATED WITH THE OVERALL MANAGEMENT OF THE FIXED PRICE CONTRACTS, ARE INCLUDED AS A COMPOSITE PERCENTAGE AND LUMP SUM ALLOWANCE (FOR BID PACKAGE PREP) BASED ON THE ESTIMATING FACTOR/BILLING SCHEDULE. THE TOTAL COMPOSITE PERCENTAGE AND LUMP SUM ALLOWANCE ARE APPLIED AGAINST THE TOTAL FIXED PRICE CONTRACT AMOUNT WHICH IS REFLECTED ON THE KEH SUMMARY REPORT DOER07, INCLUDED WITH THIS ESTIMATE. (FINAL ESTIMATES MAY BE PARTIALLY MANLOADED AND INCLUDED WITHIN THE ESTIMATE DETAIL)

5. ESCALATION

ESCALATION PERCENTAGES WERE CALCULATED BY THE HANFORD MATERIAL & LABOR ESCALATION STUDY, DATED FEBRUARY 1994. ESCALATION HAS BEEN CALCULATED USING JUNE 1994 RATES.

6. ROUNDING

U.S. DEPARTMENT OF ENERGY - DOE ORDER 5100.4 PAGE I-32 SUBPARAGRAPH (M), REQUIRES ROUNDING OF ALL GENERAL PLANT PROJECTS (GPP'S) AND LINE ITEM (LI) COST ESTIMATES. REFERENCE: DOE 5100.4, FIGURE I-11, DATED 10-31-84.

7. REMARKS

A.) ALL CONSTRUCTION IS ESTIMATED AS BY CPAF. E. & I. IS BY CPAF.
B.) NO DESIGN, PROJECT MANAGEMENT, OR WHC PROJECT MANAGEMENT IS INCLUDED.
C.) ALL EXCAVATED DIRT IS BARRELLED & REPLACED.
D.) NO ESCALATION IS APPLIED TO WBS 33 (WASTE BURIAL CHARGE) AS THE COST PER CUBIC FOOT ($173) COMES FROM THE 5 YEAR PROJECTION.

KAISER ENGINEERS HANFORD
WESTINGHOUSE HANFORD COMPANY
JOB NO. Z198 / ER5511
FILE NO. Z198SDA2

** IEST - INTERACTIVE ESTIMATING **
12" RISER IN S.S. TANKS USING ROTARY DRILL
STUDY -ADD 12" RISER TO EXISTING SST- 25mr VERSION
DOE_R04 - COST CODE ACCOUNT SUMMARY

PAGE 4 OF 7
DATE 07/27/94 08:28:28
BY SMF, DP

COST CODE/WBS	DESCRIPTION	ESTIMATE SUBTOTAL	ONSITE INDIRECTS	SUB TOTAL	ESCALATION %	ESCALATION TOTAL	SUB TOTAL	CONTINGENCY %	CONTINGENCY TOTAL	TOTAL DOLLARS
000	ENGINEERING									
121001	ENGINEERING/INSPECTION-ONSITE E/C	3540	0	3540	3.16	112	3652	30	1096	4747
TOTAL 000	ENGINEERING	3540	0	3540	3.16	112	3652	30	1096	4747
700	SPECIAL EQUIP/PROCESS SYSTEMS									
310031	CPAF BUILD REUSABLE GREENHOUSE	5605	0	5605	3.57	200	5805	30	1741	7546
310032	CPAF BUILD REUSABLE HVAC /EXHAUSTER	342166	0	342166	3.56	12181	354347	30	106304	460651
310140	SWP AND SAFETY SUPPORT	22117	0	22117	3.56	787	22904	30	6871	29776
310141	CPAF MOVE IN/ SETUP	23867	0	23867	3.56	850	24717	30	7415	32132
310162	CPAF CORE DRILL W/ ROTARY DRILL RIG	46952	0	46952	3.56	1672	48624	30	14587	63210
310172	CPAF FAB & INSTALL 12" RISER	13628	0	13628	3.57	486	14114	30	4235	18347
310182	BURNOUT	83855	0	83855	3.56	2985	86840	30	26052	112892
330062	WHC BURIAL CHARGES	6401	0	6401	0.00	0	6401	30	1920	8321
TOTAL 700	SPECIAL EQUIP/PROCESS SYSTEM	544591	0	544591	3.52	19161	563752	30	169125	732875
PROJECT TOTAL		548,131	0	548,131	3.52	19,273	567,404	30	170,221	737,622

KAISER ENGINEERS HANFORD
WESTINGHOUSE HANFORD COMPANY
JOB NO. Z198 / ER5511
FILE NO. Z198SDA2

** IEST - INTERACTIVE ESTIMATING **
12" RISER IN S.S. TANKS USING ROTARY DRILL
STUDY -ADD 12" RISER TO EXISTING SST- 25mr VERSION
DOE_R05 - ESTIMATE SUMMARY BY CSI DIVISION

DATE 07/27/94 08:28:31
BY SMF, DP

CSI	DESCRIPTION	ESTIMATE SUBTOTAL	ONSITE INDIRECTS	SUB TOTAL	ESCALATION %	ESCALATION TOTAL	SUB TOTAL	CONTINGENCY %	CONTINGENCY TOTAL	TOTAL DOLLARS
ENGINEERING										
00	TECHNICAL SERVICES	3540	0	3540	3.16	112	3652	30	1096	4747
	TOTAL ENGINEERING	3,540	0	3,540	3.16	112	3,652	30	1,096	4,747
CONSTRUCTION										
02	SITEWORK	188216	0	188216	3.44	6474	194690	30	58406	253095
03	CONCRETE	3737	0	3737	3.56	133	3870	30	1161	5031
15	MECHANICAL	352638	0	352638	3.56	12554	365192	30	109558	474749
	TOTAL CONSTRUCTION	544,591	0	544,591	3.52	19,161	563,752	30	169,125	732,875
PROJECT TOTAL		548,131	0	548,131	3.52	19,273	567,404	30	170,221	737,622

REFERENCE: ESTIMATE BASIS SHEET PAGE 3 OF 7
COST CODE ACCOUNT SUMMARY PAGE 4 OF 7

THE U.S. DEPARTMENT OF ENERGY - RICHLAND ORDER 5700.3 "COST ESTIMATING, ANALYSIS AND STANDARDIZATION" DATED 3-27-85, PROVIDES GUIDELINES FOR ESTIMATE CONTINGENCIES. THE GUIDELINE FOR A STUDY ESTIMATE SHOULD HAVE AN OVERALL RANGE OF 20 TO 30% .

CONTINGENCY IS EVALUATED AT THE THIRD COST CODE LEVEL AND SUMMARIZED AT THE PRIMARY AND SECONDARY COST CODE LEVEL OF THE DETAILED COST ESTIMATE.

000 ENGINEERING

121001	ENGINEERING/INSPECTION-ONSITE E/C	30%	CONTINGENCY WAS ADDED AS INSPECTION WILL HAVE SAME PROBLEMS AS CONSTRUCTION

AVERAGE ENGINEERING CONTINGENCY 30%

700 SPECIAL EQUIP/PROCESS SYSTEMS

310031	CPAF BUILD REUSABLE GREENHOUSE	30%	CONTINGENCY WAS ADDED AS DESIGN OF GREENHOUSE COULD VARY
310032	CPAF FAB GRNHS HVAC & TK EXHAUSTER	30	CONTINGENCY WAS ADDED AS SPECIFICATIONS FOR HVAC EQUIPMENT WILL CHANGE
310140	SWP AND SAFETY SUPPORT	30	CONTINGENCY WAS ADDED AS EXACT METHOD AND SCOPE OF WORK EXPECTED IS NOT KNOWN
310141	CPAF MOVE IN/ SETUP	30	CONTINGENCY WAS ADDED AS EXACT METHOD AND SCOPE OF WORK EXPECTED IS NOT KNOWN
310162	CPAF CORE DRILL W/ ROTARY DRILL RIG	30	CONTINGENCY WAS ADDED AS EXACT METHOD AND SCOPE OF WORK EXPECTED IS NOT KNOWN
310172	CPAF FAB & INSTALL 12" RISER	30	CONTINGENCY WAS ADDED AS EXACT METHOD AND SCOPE OF WORK EXPECTED IS NOT KNOWN
310182	BURNOUT	30	CONTINGENCY WAS ADDED AS EXACT METHOD AND SCOPE OF WORK EXPECTED IS NOT KNOWN
330062	WHC BURIAL CHARGE	30	CONTINGENCY WAS ADDED AS EXACT METHOD AND SCOPE OF WORK EXPECTED IS NOT KNOWN

TOTAL 700 SPECIAL EQUIP/PROCESS SYSTEM 30

AVERAGE CONSTRUCTION CONTINGENCY 30%

AVERAGE PROJECT CONTINGENCY 30%

WBS	DESCRIPTION	ESTIMATE SUBTOTAL	CONTRACT %	ADMINISTRATION TOTAL	BID PACK PREP.	OTHER INDIRECTS	TOTAL INDIRECTS
121001	ENGINEERING/INSPECTION-ONSITE E/C	3540	0.00	0	0	0	0
310031	CPAF BUILD REUSABLE GREENHOUSE	5605	0.00	0	0	0	0
310032	CPAF BUILD REUSABLE HVAC /EXHAUSTER	342166	0.00	0	0	0	0
310140	SWP AND SAFETY SUPPORT	22117	0.00	0	0	0	0
310141	CPAF MOVE IN/ SETUP	23867	0.00	0	0	0	0
310162	CPAF CORE DRILL W/ ROTARY DRILL RIG	46952	0.00	0	0	0	0
310172	CPAF FAB & INSTALL 12" RISER	13628	0.00	0	0	0	0
310182	BURNOUT	83855	0.00	0	0	0	0
330062	WHC BURIAL CHARGES	6401	0.00	0	0	0	0
	PROJECT TOTAL	548,131		0	0	0	0

KAISER ENGINEERS HANFORD
WESTINGHOUSE HANFORD COMPANY
JOB NO. Z198 / ER5511
FILE NO. Z198SAB2

** IEST - INTERACTIVE ESTIMATING **
12" RISER IN S.S. TANKS USING SLOPED EXCAV.
STUDY-ADD 12" RISERS TO EXISTING SST.100mr/NONCONGE
DOE_R01 - PROJECT COST SUMMARY

DATE 07/29/94 09:10:41
BY SMF, DP

COST CODE	DESCRIPTION	ESCALATED TOTAL COST	CONTINGENCY %	CONTINGENCY TOTAL	TOTAL DOLLARS
000	ENGINEERING	4,000	30	1,000	5,000
700	SPECIAL EQUIP/PROCESS SYSTEMS	2,818,000	30	846,000	3,664,000
	PROJECT TOTAL	2,822,000	30	847,000	3,669,000

TYPE OF ESTIMATE STUDY JULY 29, 1994

ARCHITECT ENGINEER G. Chadwick Chris H Brewick

OPERATING CONTRACTOR C. DeFigh-Price 8/10/94

REMARKS:

NO DESIGN OR PROJECT MANAGEMENT IS INCLUDED.

(ROUNDED/ADJUSTED TO THE NEAREST " 1,000 / 10,000 " - PERCENTAGES NOT RECALCULATED TO REFLECT ROUNDING)

** IEST - INTERACTIVE ESTIMATING **
12" RISER IN S.S. TANKS USING ROTARY DRILL
STUDY -ADD 12" RISER TO EXISTING SST-100mr VERSION
DOE_R02 - WORK BREAKDOWN STRUCTURE SUMMARY

WBS	DESCRIPTION	ESTIMATE SUBTOTAL	ONSITE INDIRECTS	SUB TOTAL	ESCALATION %	ESCALATION TOTAL	SUB TOTAL	CONTINGENCY %	CONTINGENCY TOTAL	TOTAL DOLLARS
121001	ENGINEERING/INSPECTION-ONSITE E/C	3540	0	3540	3.16	112	3652	30	1096	4747
SUBTOTAL 121	ENGINEERING/INSPECTION-ONSI	3540	0	3540	3.16	112	3652	30	1096	4747
SUBTOTAL 1	ENGINEERING	3540	0	3540	3.16	112	3652	30	1096	4747
310031	CPAF BUILD REUSABLE GREENHOUSE	5605	0	5605	3.57	200	5805	30	1741	7546
310032	CPAF BUILD REUSABLE HVAC /EXHAUSTER	342166	0	342166	3.56	12181	354347	30	106304	460651
SUBTOTAL 3100	CPAF ONE TIME CONSTR - SUBT	347771	0	347771	3.56	12381	360152	30	108045	468197
310140	SWP AND SAFETY SUPPORT	22117	0	22117	3.56	787	22904	30	6871	29776
310141	CPAF MOVE IN/ SETUP	23867	0	23867	3.56	850	24717	30	7415	32132
310162	CPAF CORE DRILL W/ ROTARY DRILL RIG	46952	0	46952	3.56	1672	48624	30	14587	63210
310172	CPAF FAB & INSTALL 12" RISER	13628	0	13628	3.57	486	14114	30	4235	18347
310182	BURNOUT	432979	0	432979	3.56	15414	448393	30	134518	582911
SUBTOTAL 3101	CPAF COST FOR EACH TANK - S	539543	0	539543	3.56	19209	558752	30	167626	726376
SUBTOTAL 31	FA CONST-ONSITE E/C	887314	0	887314	3.56	31590	918904	30	275671	1194573
330062	WHC BURIAL CHARGES	6401	0	6401	0.00	0	6401	30	1920	8321
SUBTOTAL 33	CONSTRUCTION-O/C	6401	0	6401	0.00	0	6401	30	1920	8321
SUBTOTAL 3	CONSTRUCTION	893715	0	893715	3.53	31590	925305	30	277591	1202894
PROJECT TOTAL		897,255	0	897,255	3.53	31,702	928,957	30	278,687	1,207,641

1. DOCUMENTS AND DRAWINGS

DOCUMENTS: ENGINEERING STUDY (ISSUE B, MAY 1994)

DRAWINGS: NONE

2. MATERIAL PRICES

UNIT COSTS REPRESENT CURRENT PRICES FOR SPECIFIED MATERIAL.

3. LABOR RATES

CURRENT KEH BASE CRAFT RATES, AS ISSUED BY KEH FINANCE (EFFECTIVE 10-01-93), INCLUDE FRINGE BENEFITS, LABOR INSURANCE, TAXES AND TRAVEL WHERE APPLICABLE, PER HANFORD SITE STABILIZATION AGREEMENT, APPENDIX A (EFFECTIVE 09-06-93). NON CRAFT HOURLY RATES ARE BASED ON THE 1994 FISCAL YEAR BUDGET LIQUIDATION RATES AS ISSUED BY KEH FINANCE (EFFECTIVE 10-01-93).

4. GENERAL REQUIREMENTS/TECHNICAL SERVICES/OVERHEADS

A.) ONSITE CONSTRUCTION FORCES GENERAL REQUIREMENTS, TECHNICAL SERVICES AND CRAFT OVERHEAD COSTS ARE INCLUDED AS A COMPOSITE PERCENTAGE BASED ON THE KEH ESTIMATING FACTOR/BILLING SCHEDULE, REVISION 16, DATED OCTOBER 01, 1993. THE TOTAL COMPOSITE PERCENTAGE APPLIED TO ONSITE CONSTRUCTION FORCES LABOR, FOR THIS PROJECT, IS 94% FOR SHOP WORK AND 136% FOR FIELD WORK, WHICH IS REFLECTED IN THE "OH&P/B&I" COLUMN OF THE ESTIMATE DETAIL.

B.) ONSITE CONTRACT ADMINISTRATION AND CONSTRUCTION MANAGEMENT COSTS, ASSOCIATED WITH THE OVERALL MANAGEMENT OF THE FIXED PRICE CONTRACTS, ARE INCLUDED AS A COMPOSITE PERCENTAGE AND LUMP SUM ALLOWANCE (FOR BID PACKAGE PREP) BASED ON THE ESTIMATING FACTOR/BILLING SCHEDULE. THE TOTAL COMPOSITE PERCENTAGE AND LUMP SUM ALLOWANCE ARE APPLIED AGAINST THE TOTAL FIXED PRICE CONTRACT AMOUNT WHICH IS REFLECTED ON THE KEH SUMMARY REPORT DOER07, INCLUDED WITH THIS ESTIMATE. (FINAL ESTIMATES MAY BE PARTIALLY MANLOADED AND INCLUDED WITHIN THE ESTIMATE DETAIL)

5. ESCALATION

ESCALATION PERCENTAGES WERE CALCULATED BY THE HANFORD MATERIAL & LABOR ESCALATION STUDY, DATED FEBRUARY 1994. ESCALATION HAS BEEN CALCULATED USING JUNE 1994 RATES.

6. ROUNDING

U.S. DEPARTMENT OF ENERGY - DOE ORDER 5100.4 PAGE I-32 SUBPARAGRAPH (M), REQUIRES ROUNDING OF ALL GENERAL PLANT PROJECTS (GPP'S) AND LINE ITEM (LI) COST ESTIMATES. REFERENCE: DOE 5100.4, FIGURE I-11, DATED 10-31-84.

7. REMARKS

A.) ALL CONSTRUCTION IS ESTIMATED AS BY CPAF. E. & I. IS BY CPAF.
B.) NO DESIGN, PROJECT MANAGEMENT, OR WHC PROJECT MANAGEMENT IS INCLUDED.
C.) ALL EXCAVATED DIRT IS BARRELLED & REPLACED.
D.) NO ESCALATION IS APPLIED TO WBS 33 (WASTE BURIAL CHARGE) AS THE COST PER CUBIC FOOT ($173) COMES FROM THE 5 YEAR PROJECTION.

KAISER ENGINEERS HANFORD
WESTINGHOUSE HANFORD COMPANY
JOB NO. Z198 / ER5511
FILE NO. Z198SDB2

** IEST - INTERACTIVE ESTIMATING **
12" RISER IN S.S. TANKS USING ROTARY DRILL
STUDY -ADD 12" RISER TO EXISTING SST-100mr VERSION
DOE_R04 - COST CODE ACCOUNT SUMMARY

DATE 07/29/94 08:32:01
BY SMF, DP

COST CODE/WBS	DESCRIPTION	ESTIMATE SUBTOTAL	ONSITE INDIRECTS	SUB TOTAL	ESCALATION %	ESCALATION TOTAL	SUB TOTAL	CONTINGENCY %	CONTINGENCY TOTAL	TOTAL DOLLARS
000	ENGINEERING									
121001	ENGINEERING/INSPECTION-ONSITE E/C	3540	0	3540	3.16	112	3652	30	1096	4747
TOTAL 000	ENGINEERING	3540	0	3540	3.16	112	3652	30	1096	4747
700	SPECIAL EQUIP/PROCESS SYSTEMS									
310031	CPAF BUILD REUSABLE GREENHOUSE	5605	0	5605	3.57	200	5805	30	1741	7546
310032	CPAF BUILD REUSABLE HVAC /EXHAUSTER	342166	0	342166	3.56	12181	354347	30	106304	460651
310140	SWP AND SAFETY SUPPORT	22117	0	22117	3.56	787	22904	30	6871	29776
310141	CPAF MOVE IN/ SETUP	23867	0	23867	3.56	850	24717	30	7415	32132
310162	CPAF CORE DRILL W/ ROTARY DRILL RIG	46952	0	46952	3.56	1672	48624	30	14587	63210
310172	CPAF FAB & INSTALL 12" RISER	13628	0	13628	3.57	486	14114	30	4235	18347
310182	BURNOUT	432979	0	432979	3.56	15414	448393	30	134518	582911
330062	WHC BURIAL CHARGES	6401	0	6401	0.00	0	6401	30	1920	8321
TOTAL 700	SPECIAL EQUIP/PROCESS SYSTEM	893715	0	893715	3.53	31590	925305	30	277591	1202894
PROJECT TOTAL		897,255	0	897,255	3.53	31,702	928,957	30	278,687	1,207,641

KAISER ENGINEERS HANFORD
WESTINGHOUSE HANFORD COMPANY
JOB NO. Z198 / ER5511
FILE NO. Z198SDB2

** IEST - INTERACTIVE ESTIMATING **
12" RISER IN S.S. TANKS USING ROTARY DRILL
STUDY -ADD 12" RISER TO EXISTING SST-100mr VERSION
DOE_R05 - ESTIMATE SUMMARY BY CSI DIVISION

DATE 07/29/94 08:32:03
BY SMF, DP

CSI	DESCRIPTION	ESTIMATE SUBTOTAL	ONSITE INDIRECTS	SUB TOTAL	ESCALATION %	ESCALATION TOTAL	SUB TOTAL	CONTINGENCY %	CONTINGENCY TOTAL	TOTAL DOLLARS
ENGINEERING										
00	TECHNICAL SERVICES	3540	0	3540	3.16	112	3652	30	1096	4747
TOTAL ENGINEERING		3,540	0	3,540	3.16	112	3,652	30	1,096	4,747
CONSTRUCTION										
02	SITEWORK	537340	0	537340	3.52	18903	556243	30	166872	723114
03	CONCRETE	3737	0	3737	3.56	133	3870	30	1161	5031
15	MECHANICAL	352638	0	352638	3.56	12554	365192	30	109558	474749
TOTAL CONSTRUCTION		893,715	0	893,715	3.53	31,590	925,305	30	277,591	1,202,894
PROJECT TOTAL		897,255	0	897,255	3.53	31,702	928,957	30	278,687	1,207,641

REFERENCE: ESTIMATE BASIS SHEET — PAGE 3 OF 7
COST CODE ACCOUNT SUMMARY — PAGE 4 OF 7

THE U.S. DEPARTMENT OF ENERGY - RICHLAND ORDER 5700.3 "COST ESTIMATING, ANALYSIS AND STANDARDIZATION" DATED 3-27-85, PROVIDES GUIDELINES FOR ESTIMATE CONTINGENCIES. THE GUIDELINE FOR A STUDY ESTIMATE SHOULD HAVE AN OVERALL RANGE OF 20 TO 30% .

CONTINGENCY IS EVALUATED AT THE THIRD COST CODE LEVEL AND SUMMARIZED AT THE PRIMARY AND SECONDARY COST CODE LEVEL OF THE DETAILED COST ESTIMATE.

000 ENGINEERING

121001	ENGINEERING/INSPECTION-ONSITE E/C	30%	CONTINGENCY WAS ADDED AS INSPECTION WILL HAVE SAME PROBLEMS AS CONSTRUCTION

AVERAGE ENGINEERING CONTINGENCY 30%

700 SPECIAL EQUIP/PROCESS SYSTEMS

310031	CPAF BUILD REUSABLE GREENHOUSE	30%	CONTINGENCY WAS ADDED AS DESIGN OF GREENHOUSE COULD VARY
310032	CPAF FAB GRNHS HVAC & TK EXHAUSTER	30	CONTINGENCY WAS ADDED AS SPECIFICATIONS FOR HVAC EQUIPMENT WILL CHANGE
310140	SWP AND SAFETY SUPPORT	30	CONTINGENCY WAS ADDED AS EXACT METHOD AND SCOPE OF WORK EXPECTED IS NOT KNOWN
310141	CPAF MOVE IN/ SETUP	30	CONTINGENCY WAS ADDED AS EXACT METHOD AND SCOPE OF WORK EXPECTED IS NOT KNOWN
310162	CPAF CORE DRILL W/ ROTARY DRILL RIG	30	CONTINGENCY WAS ADDED AS EXACT METHOD AND SCOPE OF WORK EXPECTED IS NOT KNOWN
310172	CPAF FAB & INSTALL 12" RISER	30	CONTINGENCY WAS ADDED AS EXACT METHOD AND SCOPE OF WORK EXPECTED IS NOT KNOWN
310182	BURNOUT	30	CONTINGENCY WAS ADDED AS EXACT METHOD AND SCOPE OF WORK EXPECTED IS NOT KNOWN
330062	WHC BURIAL CHARGE	30	CONTINGENCY WAS ADDED AS EXACT METHOD AND SCOPE OF WORK EXPECTED IS NOT KNOWN

TOTAL 700 SPECIAL EQUIP/PROCESS SYSTEM 30

AVERAGE CONSTRUCTION CONTINGENCY 30%

AVERAGE PROJECT CONTINGENCY 30%

KAISER ENGINEERS HANFORD
WESTINGHOUSE HANFORD COMPANY
JOB NO. Z198 / ER5511
FILE NO. Z198SDB2

** IEST - INTERACTIVE ESTIMATING **
12" RISER IN S.S. TANKS USING ROTARY DRILL
STUDY -ADD 12" RISER TO EXISTING SST-100mr VERSION
DOE_R07 - ONSITE INDIRECT COSTS BY WBS

DATE 07/29/94 08:32:05
BY SMF, DP

WBS	DESCRIPTION	ESTIMATE SUBTOTAL	CONTRACT %	ADMINISTRATION TOTAL	BID PACK PREP.	OTHER INDIRECTS	TOTAL INDIRECTS
121001	ENGINEERING/INSPECTION-ONSITE E/C	3540	0.00	0	0	0	0
310031	CPAF BUILD REUSABLE GREENHOUSE	5605	0.00	0	0	0	0
310032	CPAF BUILD REUSABLE HVAC /EXHAUSTER	342166	0.00	0	0	0	0
310140	SWP AND SAFETY SUPPORT	22117	0.00	0	0	0	0
310141	CPAF MOVE IN/ SETUP	23867	0.00	0	0	0	0
310162	CPAF CORE DRILL W/ ROTARY DRILL RIG	46952	0.00	0	0	0	0
310172	CPAF FAB & INSTALL 12" RISER	13628	0.00	0	0	0	0
310182	BURNOUT	432979	0.00	0	0	0	0
330062	WHC BURIAL CHARGES	6401	0.00	0	0	0	0
	PROJECT TOTAL	897,255		0	0	0	0

KAISER ENGINEERS HANFORD
WESTINGHOUSE HANFORD COMPANY
JOB NO. Z198 / ER5511
FILE NO. Z198SCB2

** IEST - INTERACTIVE ESTIMATING **
12" RISER IN S.S. TANKS USING CAISSON EXCAV.
STUDY -ADD 12" RISER TO EXISTING SST-100mr/NONCONGE
DOE_R01 - PROJECT COST SUMMARY

PAGE 1 OF 7
DATE 07/29/94 12:55:42
BY SMF, DP

COST CODE	DESCRIPTION	ESCALATED TOTAL COST	CONTINGENCY %	CONTINGENCY TOTAL	TOTAL DOLLARS
000	ENGINEERING	4,000	30	1,000	5,000
700	SPECIAL EQUIP/PROCESS SYSTEMS	1,087,000	30	326,000	1,413,000
	PROJECT TOTAL	1,091,000	30	327,000	1,418,000

TYPE OF ESTIMATE STUDY JULY 29, 1994

ARCHITECT ENGINEER G Chadwick Chris H Brevick

OPERATING CONTRACTOR C. DeFigh-Price 8/10/94

REMARKS:

NO DESIGN OR PROJECT MANAGEMENT IS INCLUDED.

(ROUNDED/ADJUSTED TO THE NEAREST " 1,000 / 10,000 " - PERCENTAGES NOT RECALCULATED TO REFLECT ROUNDING)

WBS	DESCRIPTION	ESTIMATE SUBTOTAL	ONSITE INDIRECTS	SUB TOTAL	ESCALATION %	ESCALATION TOTAL	SUB TOTAL	CONTINGENCY %	CONTINGENCY TOTAL	TOTAL DOLLARS
121001	ENGINEERING/INSPECTION-ONSITE E/C	3540	0	3540	3.16	112	3652	30	1096	4747
SUBTOTAL 121	ENGINEERING/INSPECTION-ONSI	3540	0	3540	3.16	112	3652	30	1096	4747
SUBTOTAL 1	ENGINEERING	3540	0	3540	3.16	112	3652	30	1096	4747
310031	CPAF BUILD REUSABLE GREENHOUSE	5605	0	5605	3.57	200	5805	30	1741	7546
310032	CPAF BUILD REUSABLE HVAC /EXHAUSTER	342166	0	342166	3.56	12181	354347	30	106304	460651
SUBTOTAL 3100	CPAF ONE TIME CONSTR - SUBT	347771	0	347771	3.56	12381	360152	30	108045	468197
310140	SWP AND SAFETY SUPPORT	22117	0	22117	3.56	787	22904	30	6871	29776
310141	CPAF MOVE IN/ SETUP	23867	0	23867	3.56	850	24717	30	7415	32132
310162	CPAF CORE DRILL W/ ROTARY DRILL RIG	46952	0	46952	3.56	1672	48624	30	14587	63210
310172	CPAF FAB & INSTALL 12" RISER	13628	0	13628	3.57	486	14114	30	4235	18347
310182	BURNOUT	2295793	0	2295793	3.56	81730	2377523	30	713257	3090780
SUBTOTAL 3101	CPAF COST FOR EACH TANK - S	2402357	0	2402357	3.56	85525	2487882	30	746365	3234245
SUBTOTAL 31	FA CONST-ONSITE E/C	2750128	0	2750128	3.56	97906	2848034	30	854410	3702442
330062	WHC BURIAL CHARGES	6401	0	6401	0.00	0	6401	30	1920	8321
SUBTOTAL 33	CONSTRUCTION-O/C	6401	0	6401	0.00	0	6401	30	1920	8321
SUBTOTAL 3	CONSTRUCTION	2756529	0	2756529	3.55	97906	2854435	30	856330	3710763
PROJECT TOTAL		2,760,069	0	2,760,069	3.55	98,018	2,858,087	30	857,426	3,715,510

1. DOCUMENTS AND DRAWINGS

DOCUMENTS: ENGINEERING STUDY (ISSUE B, MAY 1994)

DRAWINGS: NONE

2. MATERIAL PRICES

UNIT COSTS REPRESENT CURRENT PRICES FOR SPECIFIED MATERIAL.

3. LABOR RATES

CURRENT KEH BASE CRAFT RATES, AS ISSUED BY KEH FINANCE (EFFECTIVE 10-01-93), INCLUDE FRINGE BENEFITS, LABOR INSURANCE, TAXES AND TRAVEL WHERE APPLICABLE, PER HANFORD SITE STABILIZATION AGREEMENT, APPENDIX A (EFFECTIVE 09-06-93). NON CRAFT HOURLY RATES ARE BASED ON THE 1994 FISCAL YEAR BUDGET LIQUIDATION RATES AS ISSUED BY KEH FINANCE (EFFECTIVE 10-01-93).

4. GENERAL REQUIREMENTS/TECHNICAL SERVICES/OVERHEADS

A.) ONSITE CONSTRUCTION FORCES GENERAL REQUIREMENTS, TECHNICAL SERVICES AND CRAFT OVERHEAD COSTS ARE INCLUDED AS A COMPOSITE PERCENTAGE BASED ON THE KEH ESTIMATING FACTOR/BILLING SCHEDULE, REVISION 1.6, DATED OCTOBER 01, 1993. THE TOTAL COMPOSITE PERCENTAGE APPLIED TO ONSITE CONSTRUCTION FORCES LABOR, FOR THIS PROJECT, IS 94% FOR SHOP WORK AND 136% FOR FIELD WORK, WHICH IS REFLECTED IN THE "OH&P/B&I" COLUMN OF THE ESTIMATE DETAIL.

B.) ONSITE CONTRACT ADMINISTRATION AND CONSTRUCTION MANAGEMENT COSTS, ASSOCIATED WITH THE OVERALL MANAGEMENT OF THE FIXED PRICE CONTRACTS, ARE INCLUDED AS A COMPOSITE PERCENTAGE AND LUMP SUM ALLOWANCE (FOR BID PACKAGE PREP) BASED ON THE ESTIMATING FACTOR/BILLING SCHEDULE. THE TOTAL COMPOSITE PERCENTAGE AND LUMP SUM ALLOWANCE ARE APPLIED AGAINST THE TOTAL FIXED PRICE CONTRACT AMOUNT WHICH IS REFLECTED ON THE KEH SUMMARY REPORT DOER07, INCLUDED WITH THIS ESTIMATE. (FINAL ESTIMATES MAY BE PARTIALLY MANLOADED AND INCLUDED WITHIN THE ESTIMATE DETAIL)

5. ESCALATION

ESCALATION PERCENTAGES WERE CALCULATED BY THE HANFORD MATERIAL & LABOR ESCALATION STUDY, DATED FEBRUARY 1994. ESCALATION HAS BEEN CALCULATED USING JUNE 1994 RATES.

6. ROUNDING

U.S. DEPARTMENT OF ENERGY - DOE ORDER 5100.4 PAGE 1-32 SUBPARAGRAPH (M), REQUIRES ROUNDING OF ALL GENERAL PLANT PROJECTS (GPP'S) AND LINE ITEM (LI) COST ESTIMATES. REFERENCE: DOE 5100.4, FIGURE I-11, DATED 10-31-84.

7. REMARKS

A.) ALL CONSTRUCTION IS ESTIMATED AS BY CPAF. E. & I. IS BY CPAF.
B.) NO DESIGN, PROJECT MANAGEMENT, OR WHC PROJECT MANAGEMENT IS INCLUDED.
C.) ALL EXCAVATED DIRT IS BARRELLED & REPLACED.
D.) NO ESCALATION IS APPLIED TO WBS 33 (WASTE BURIAL CHARGE) AS THE COST PER CUBIC FOOT ($173) COMES FROM THE 5 YEAR PROJECTION.

COST CODE/WBS	DESCRIPTION	ESTIMATE SUBTOTAL	ONSITE INDIRECTS	SUB TOTAL	ESCALATION %	ESCALATION TOTAL	SUB TOTAL	CONTINGENCY %	CONTINGENCY TOTAL	TOTAL DOLLARS
000	ENGINEERING									
121001	ENGINEERING/INSPECTION-ONSITE E/C	3540	0	3540	3.16	112	3652	30	1096	4747
TOTAL 000	ENGINEERING	3540	0	3540	3.16	112	3652	30	1096	4747
700	SPECIAL EQUIP/PROCESS SYSTEMS									
310031	CPAF BUILD REUSABLE GREENHOUSE	5605	0	5605	3.57	200	5805	30	1741	7546
310032	CPAF BUILD REUSABLE HVAC /EXHAUSTER	342166	0	342166	3.56	12181	354347	30	106304	460651
310140	SWP AND SAFETY SUPPORT	22117	0	22117	3.56	787	22904	30	6871	29776
310141	CPAF MOVE IN/ SETUP	23867	0	23867	3.56	850	24717	30	7415	32132
310162	CPAF CORE DRILL W/ ROTARY DRILL RIG	46952	0	46952	3.56	1672	48624	30	14587	63210
310172	CPAF FAB & INSTALL 12" RISER	13628	0	13628	3.57	486	14114	30	4235	18347
310182	BURNOUT	2295793	0	2295793	3.56	81730	2377523	30	713257	3090780
330062	WHC BURIAL CHARGES	6401	0	6401	0.00	0	6401	30	1920	8321
TOTAL 700	SPECIAL EQUIP/PROCESS SYSTEM	2756529	0	2756529	3.55	97906	2854435	30	856330	3710763
PROJECT TOTAL		2,760,069	0	2,760,069	3.55	98,018	2,858,087	30	857,426	3,715,510

KAISER ENGINEERS HANFORD
WESTINGHOUSE HANFORD COMPANY
JOB NO. Z198 / ER5511
FILE NO. Z198SDC2

** IEST - INTERACTIVE ESTIMATING **
12" RISER IN S.S. TANKS USING ROTARY DRILL
STUDY -ADD 12" RISER TO EXISTING SST-500mr VERSION
DOE_R05 - ESTIMATE SUMMARY BY CSI DIVISION

DATE 07/29/94 08:34:27
BY SMF, DP

CSI	DESCRIPTION	ESTIMATE SUBTOTAL	ONSITE INDIRECTS	SUB TOTAL	ESCALATION %	ESCALATION TOTAL	SUB TOTAL	CONTINGENCY %	CONTINGENCY TOTAL	TOTAL DOLLARS
ENGINEERING										
00	TECHNICAL SERVICES	3540	0	3540	3.16	112	3652	30	1096	4747
	TOTAL ENGINEERING	3,540	0	3,540	3.16	112	3,652	30	1,096	4,747
CONSTRUCTION										
02	SITEWORK	2400154	0	2400154	3.55	85219	2485373	30	745611	3230983
03	CONCRETE	3737	0	3737	3.56	133	3870	30	1161	5031
15	MECHANICAL	352638	0	352638	3.56	12554	365192	30	109558	474749
	TOTAL CONSTRUCTION	2,756,529	0	2,756,529	3.55	97,906	2,854,435	30	856,330	3,710,763
PROJECT TOTAL		2,760,069	0	2,760,069	3.55	98,018	2,858,087	30	857,426	3,715,510

REFERENCE: ESTIMATE BASIS SHEET PAGE 3 OF 7
COST CODE ACCOUNT SUMMARY PAGE 4 OF 7

THE U.S. DEPARTMENT OF ENERGY - RICHLAND ORDER 5700.3 "COST ESTIMATING, ANALYSIS AND STANDARDIZATION" DATED 3-27-85, PROVIDES GUIDELINES FOR ESTIMATE CONTINGENCIES. THE GUIDELINE FOR A STUDY ESTIMATE SHOULD HAVE AN OVERALL RANGE OF 20 TO 30% .

CONTINGENCY IS EVALUATED AT THE THIRD COST CODE LEVEL AND SUMMARIZED AT THE PRIMARY AND SECONDARY COST CODE LEVEL OF THE DETAILED COST ESTIMATE.

000 ENGINEERING

121001	ENGINEERING/INSPECTION-ONSITE E/C	30%	CONTINGENCY WAS ADDED AS INSPECTION WILL HAVE SAME PROBLEMS AS CONSTRUCTION

AVERAGE ENGINEERING CONTINGENCY 30%

700 SPECIAL EQUIP/PROCESS SYSTEMS

310031	CPAF BUILD REUSABLE GREENHOUSE	30%	CONTINGENCY WAS ADDED AS DESIGN OF GREENHOUSE COULD VARY
310032	CPAF FAB GRNHS HVAC & TK EXHAUSTER	30	CONTINGENCY WAS ADDED AS SPECIFICATIONS FOR HVAC EQUIPMENT WILL CHANGE
310140	SWP AND SAFETY SUPPORT	30	CONTINGENCY WAS ADDED AS EXACT METHOD AND SCOPE OF WORK EXPECTED IS NOT KNOWN
310141	CPAF MOVE IN/ SETUP	30	CONTINGENCY WAS ADDED AS EXACT METHOD AND SCOPE OF WORK EXPECTED IS NOT KNOWN
310162	CPAF CORE DRILL W/ ROTARY DRILL RIG	30	CONTINGENCY WAS ADDED AS EXACT METHOD AND SCOPE OF WORK EXPECTED IS NOT KNOWN
310172	CPAF FAB & INSTALL 12" RISER	30	CONTINGENCY WAS ADDED AS EXACT METHOD AND SCOPE OF WORK EXPECTED IS NOT KNOWN
310182	BURNOUT	30	CONTINGENCY WAS ADDED AS EXACT METHOD AND SCOPE OF WORK EXPECTED IS NOT KNOWN
330062	WHC BURIAL CHARGE	30	CONTINGENCY WAS ADDED AS EXACT METHOD AND SCOPE OF WORK EXPECTED IS NOT KNOWN

TOTAL 700 SPECIAL EQUIP/PROCESS SYSTEM 30

AVERAGE CONSTRUCTION CONTINGENCY 30%

AVERAGE PROJECT CONTINGENCY 30%

KAISER ENGINEERS HANFORD
WESTINGHOUSE HANFORD COMPANY
JOB NO. Z198 / ER5511
FILE NO. Z198SDC2

** IEST - INTERACTIVE ESTIMATING **
12" RISER IN S.S. TANKS USING ROTARY DRILL
STUDY -ADD 12" RISER TO EXISTING SST-500mr VERSION
DOE_R07 - ONSITE INDIRECT COSTS BY WBS

DATE 07/29/94 08:34:29
BY SMF, DP

WBS	DESCRIPTION	ESTIMATE SUBTOTAL	CONTRACT %	ADMINISTRATION TOTAL	BID PACK PREP.	OTHER INDIRECTS	TOTAL INDIRECTS
121001	ENGINEERING/INSPECTION-ONSITE E/C	3540	0.00	0	0	0	0
310031	CPAF BUILD REUSABLE GREENHOUSE	5605	0.00	0	0	0	0
310032	CPAF BUILD REUSABLE HVAC /EXHAUSTER	342166	0.00	0	0	0	0
310140	SWP AND SAFETY SUPPORT	22117	0.00	0	0	0	0
310141	CPAF MOVE IN/ SETUP	23867	0.00	0	0	0	0
310162	CPAF CORE DRILL W/ ROTARY DRILL RIG	46952	0.00	0	0	0	0
310172	CPAF FAB & INSTALL 12" RISER	13628	0.00	0	0	0	0
310182	BURNOUT	2295793	0.00	0	0	0	0
330062	WHC BURIAL CHARGES	6401	0.00	0	0	0	0
PROJECT TOTAL		2,760,069		0	0	0	0

WHC-SD-WM-ES-299, Rev. 0

KAISER ENGINEERS HANFORD
WESTINGHOUSE HANFORD COMPANY
JOB NO. Z198 / ER5511
FILE NO. Z198SCC2

** IEST - INTERACTIVE ESTIMATING **
12" RISER IN S.S. TANKS USING CAISSON EXCAV.
STUDY -ADD 12" RISER TO EXISTING SST-500mr/NONCONGE
DOE_R01 - PROJECT COST SUMMARY

PAGE 1 OF 7
DATE 07/29/94 13:39:08
BY SMF, DP

COST CODE	DESCRIPTION	ESCALATED TOTAL COST	CONTINGENCY %	CONTINGENCY TOTAL	TOTAL DOLLARS
000	ENGINEERING	4,000	30	1,000	5,000
700	SPECIAL EQUIP/PROCESS SYSTEMS	3,088,000	30	926,000	4,014,000
	PROJECT TOTAL	3,092,000	30	927,000	4,019,000

TYPE OF ESTIMATE STUDY JULY 29, 1994

ARCHITECT ENGINEER G. Chadwick Chris H Brevick

OPERATING CONTRACTOR C. Detzl-Price 8/10/94

REMARKS:

NO DESIGN OR PROJECT MANAGEMENT IS INCLUDED.

(ROUNDED/ADJUSTED TO THE NEAREST " 1,000 / 10,000 " - PERCENTAGES NOT RECALCULATED TO REFLECT ROUNDING)

WBS	DESCRIPTION	ESTIMATE SUBTOTAL	ONSITE INDIRECTS	SUB TOTAL	ESCALATION %	ESCALATION TOTAL	SUB TOTAL	CONTINGENCY %	CONTINGENCY TOTAL	TOTAL DOLLARS
121001	ENGINEERING/INSPECTION-ONSITE E/C	3540	0	3540	3.16	112	3652	30	1096	4747
SUBTOTAL 121	ENGINEERING/INSPECTION-ONSI	3540	0	3540	3.16	112	3652	30	1096	4747
SUBTOTAL 1	ENGINEERING	3540	0	3540	3.16	112	3652	30	1096	4747
310031	CPAF BUILD REUSABLE SUPPORT EQUIP	5605	0	5605	3.57	200	5805	30	1741	7546
310032	CPAF FAB GRNHS HVAC & TK EXHAUSTER	342166	0	342166	3.56	12181	354347	30	106304	460651
310067	CPAF PURCHASE WATERJET & MODIFY	196804	0	196804	3.56	7006	203810	30	61143	264953
SUBTOTAL 3100	CPAF ONE TIME CONSTR - SUBT	544575	0	544575	3.56	19387	563962	30	169188	733150
310140	SWP AND SAFETY SUPPORT/ CONFINED SP	15589	0	15589	3.56	555	16144	30	4843	20987
310141	CPAF MOVE IN/ SETUP	23671	0	23671	3.56	843	24514	30	7354	31868
310153	CPAF HAND EXCAV. RISER W/ CAISSON	15250	0	15250	3.56	543	15793	30	4738	20531
310168	CPAF CUT CORE W/ WATERJET	5314	0	5314	3.56	189	5503	30	1651	7154
310172	CPAF FAB & INSTALL 12" RISER	13634	0	13634	3.56	486	14120	30	4237	18355
310182	BURNOUT	59773	0	59773	3.56	2128	61901	30	18570	80471
SUBTOTAL 3101	CPAF COST FOR EACH TANK - S	133231	0	133231	3.56	4744	137975	30	41393	179366
SUBTOTAL 31	FA CONST-ONSITE E/C	677806	0	677806	3.56	24131	701937	30	210581	912516
330068	WHC BURIAL CHARGE	40655	0	40655	0.00	0	40655	30	12197	52852
SUBTOTAL 33	CONSTRUCTION-O/C	40655	0	40655	0.00	0	40655	30	12197	52852
SUBTOTAL 3	CONSTRUCTION	718461	0	718461	3.36	24131	742592	30	222778	965368
PROJECT TOTAL		722,001	0	722,001	3.36	24,243	746,244	30	223,874	970,115

1. DOCUMENTS AND DRAWINGS
==========
DOCUMENTS: ENGINEERING STUDY (ISSUE B, MAY 1994)

DRAWINGS: NONE

2. MATERIAL PRICES
==========
UNIT COSTS REPRESENT CURRENT PRICES FOR SPECIFIED MATERIAL.

3. LABOR RATES
==========
CURRENT KEH BASE CRAFT RATES, AS ISSUED BY KEH FINANCE (EFFECTIVE 10-01-93), INCLUDE FRINGE BENEFITS, LABOR INSURANCE, TAXES AND TRAVEL WHERE APPLICABLE, PER HANFORD SITE STABILIZATION AGREEMENT, APPENDIX A (EFFECTIVE 09-06-93). NON CRAFT HOURLY RATES ARE BASED ON THE 1994 FISCAL YEAR BUDGET LIQUIDATION RATES AS ISSUED BY KEH FINANCE (EFFECTIVE 10-01-93).

4. GENERAL REQUIREMENTS/TECHNICAL SERVICES/OVERHEADS
==========
A.) ONSITE CONSTRUCTION FORCES GENERAL REQUIREMENTS, TECHNICAL SERVICES AND CRAFT OVERHEAD COSTS ARE INCLUDED AS A COMPOSITE PERCENTAGE BASED ON THE KEH ESTIMATING FACTOR/BILLING SCHEDULE, REVISION 16, DATED OCTOBER 01, 1993. THE TOTAL COMPOSITE PERCENTAGE APPLIED TO ONSITE CONSTRUCTION FORCES LABOR, FOR THIS PROJECT, IS 94% FOR SHOP WORK AND 136% FOR FIELD WORK, WHICH IS REFLECTED IN THE "OH&P/B&I" COLUMN OF THE ESTIMATE DETAIL.
B.) ONSITE CONTRACT ADMINISTRATION AND CONSTRUCTION MANAGEMENT COSTS, ASSOCIATED WITH THE OVERALL MANAGEMENT OF THE FIXED PRICE CONTRACTS, ARE INCLUDED AS A COMPOSITE PERCENTAGE AND LUMP SUM ALLOWANCE (FOR BID PACKAGE PREP) BASED ON THE ESTIMATING FACTOR/BILLING SCHEDULE. THE TOTAL COMPOSITE PERCENTAGE AND LUMP SUM ALLOWANCE ARE APPLIED AGAINST THE TOTAL FIXED PRICE CONTRACT AMOUNT WHICH IS REFLECTED ON THE KEH SUMMARY REPORT DOER07, INCLUDED WITH THIS ESTIMATE. (FINAL ESTIMATES MAY BE PARTIALLY MANLOADED AND INCLUDED WITHIN THE ESTIMATE DETAIL)

5. ESCALATION
==========
ESCALATION PERCENTAGES WERE CALCULATED BY THE HANFORD MATERIAL & LABOR ESCALATION STUDY, DATED FEBRUARY 1994. ESCALATION HAS BEEN CALCULATED USING JUNE 1994 RATES.

6. ROUNDING
==========
U.S. DEPARTMENT OF ENERGY - DOE ORDER 5100.4 PAGE I-32 SUBPARAGRAPH (M), REQUIRES ROUNDING OF ALL GENERAL PLANT PROJECTS (GPP'S) AND LINE ITEM (LI) COST ESTIMATES. REFERENCE: DOE 5100.4, FIGURE I-11, DATED 10-31-84.

7. REMARKS
==========
A.) ALL CONSTRUCTION IS ESTIMATED AS BY CPAF. E. & I. IS BY CPAF.

B.) NO DESIGN, PROJECT MANAGEMENT, OR WHC PROJECT MANAGEMENT IS INCLUDED.

C.) ALL EXCAVATED DIRT IS BARRELLED & REPLACED.

D.) NO ESCALATION IS APPLIED TO WBS 33 (WASTE BURIAL CHARGE) AS THE COST PER CUBIC FOOT ($173) COMES FROM THE 5 YEAR PROJECTION.

KAISER ENGINEERS HANFORD
WESTINGHOUSE HANFORD COMPANY
JOB NO. Z198 / ER5511
FILE NO. Z198SEA2

** IEST - INTERACTIVE ESTIMATING **
12"RISER IN S.S. TANKS USING WATERJET & CAISSON
STUDY -ADD 12" RISERS TO EXISTING SST. 25mr/NONCONG
DOE_R04 - COST CODE ACCOUNT SUMMARY

PAGE 4 OF 7
DATE 07/29/94 15:16:44
BY SMF, DP

COST CODE/WBS	DESCRIPTION	ESTIMATE SUBTOTAL	ONSITE INDIRECTS	SUB TOTAL	ESCALATION %	ESCALATION TOTAL	SUB TOTAL	CONTINGENCY %	CONTINGENCY TOTAL	TOTAL DOLLARS
000	ENGINEERING									
121001	ENGINEERING/INSPECTION-ONSITE E/C	3540	0	3540	3.16	112	3652	30	1096	4747
TOTAL 000	ENGINEERING	3540	0	3540	3.16	112	3652	30	1096	4747
700	SPECIAL EQUIP/PROCESS SYSTEMS									
310031	CPAF BUILD REUSABLE SUPPORT EQUIP	5605	0	5605	3.57	200	5805	30	1741	7546
310032	CPAF FAB GRNHS HVAC & TK EXHAUSTER	342166	0	342166	3.56	12181	354347	30	106304	460651
310067	CPAF PURCHASE WATERJET & MODIFY	196804	0	196804	3.56	7006	203810	30	61143	264953
310140	SWP AND SAFETY SUPPORT/ CONFINED SP	15589	0	15589	3.56	555	16144	30	4843	20987
310141	CPAF MOVE IN/ SETUP	23671	0	23671	3.56	843	24514	30	7354	31868
310153	CPAF HAND EXCAV. RISER W/ CAISSON	15250	0	15250	3.56	543	15793	30	4738	20531
310168	CPAF CUT CORE W/ WATERJET	5314	0	5314	3.56	189	5503	30	1651	7154
310172	CPAF FAB & INSTALL 12" RISER	13634	0	13634	3.56	486	14120	30	4237	18355
310182	BURNOUT	59773	0	59773	3.56	2128	61901	30	18570	80471
330068	WHC BURIAL CHARGE	40655	0	40655	0.00	0	40655	30	12197	52852
TOTAL 700	SPECIAL EQUIP/PROCESS SYSTEM	718461	0	718461	3.36	24131	742592	30	222778	965368
PROJECT TOTAL		722,001	0	722,001	3.36	24,243	746,244	30	223,874	970,115

KAISER ENGINEERS HANFORD
WESTINGHOUSE HANFORD COMPANY
JOB NO. Z198 / ER5511
FILE NO. Z198SEA2

** IEST - INTERACTIVE ESTIMATING **
12"RISER IN S.S. TANKS USING WATERJET & CAISSON
STUDY -ADD 12" RISERS TO EXISTING SST. 25mr/NONCONG
DOE_R05 - ESTIMATE SUMMARY BY CSI DIVISION

DATE 07/29/94 15:16:46
BY SMF, DP

CSI	DESCRIPTION	ESTIMATE SUBTOTAL	ONSITE INDIRECTS	SUB TOTAL	ESCALATION %	ESCALATION TOTAL	SUB TOTAL	CONTINGENCY %	CONTINGENCY TOTAL	TOTAL DOLLARS
ENGINEERING										
00	TECHNICAL SERVICES	3540	0	3540	3.16	112	3652	30	1096	4747
TOTAL ENGINEERING		3,540	0	3,540	3.16	112	3,652	30	1,096	4,747
CONSTRUCTION										
02	SITEWORK	362956	0	362956	3.16	11475	374431	30	112329	486759
03	CONCRETE	2867	0	2867	3.56	102	2969	30	891	3860
15	MECHANICAL	352638	0	352638	3.56	12554	365192	30	109558	474749
TOTAL CONSTRUCTION		718,461	0	718,461	3.36	24,131	742,592	30	222,778	965,368
PROJECT TOTAL		722,001	0	722,001	3.36	24,243	746,244	30	223,874	970,115

REFERENCE: ESTIMATE BASIS SHEET PAGE 3 OF 7
COST CODE ACCOUNT SUMMARY PAGE 4 OF 7

THE U.S. DEPARTMENT OF ENERGY - RICHLAND ORDER 5700.3 "COST ESTIMATING, ANALYSIS AND STANDARDIZATION" DATED 3-27-85, PROVIDES GUIDELINES FOR ESTIMATE CONTINGENCIES. THE GUIDELINE FOR A STUDY ESTIMATE SHOULD HAVE AN OVERALL RANGE OF 20 TO 30% .

CONTINGENCY IS EVALUATED AT THE THIRD COST CODE LEVEL AND SUMMARIZED AT THE PRIMARY AND SECONDARY COST CODE LEVEL OF THE DETAILED COST ESTIMATE.

000 ENGINEERING

121001	ENGINEERING/INSPECTION-ONSITE E/C	30%	CONTINGENCY WAS ADDED AS INSPECTION WILL HAVE SAME PROBLEMS AS CONSTRUCTION

AVERAGE ENGINEERING CONTINGENCY 30%

700 SPECIAL EQUIP/PROCESS SYSTEMS

310031	CPAF BUILD REUSABLE GREENHOUSE	30%	CONTINGENCY WAS ADDED AS DESIGN OF GREENHOUSE COULD VARY
310032	CPAF FAB GRNHS HVAC & TK EXHAUSTER	30	CONTINGENCY WAS ADDED AS SPECIFICATIONS FOR HVAC EQUIPMENT WILL CHANGE
310067	CPAF PURCHASE WATERJET & MODIFY	30	CONTINGENCY WAS ADDED AS ACTUAL SPEC FOR WATERJET PURCHASE MAY CAUSE INCREASE
310140	SWP AND SAFETY SUPPORT	30	CONTINGENCY WAS ADDED AS EXACT METHOD AND SCOPE OF WORK EXPECTED IS NOT KNOWN
310141	CPAF MOVE IN/ SETUP	30	CONTINGENCY WAS ADDED AS EXACT METHOD AND SCOPE OF WORK EXPECTED IS NOT KNOWN
310153	CPAF HAND EXCAV. RISER W/ CAISSON	30	CONTINGENCY WAS ADDED AS EXACT METHOD AND SCOPE OF WORK EXPECTED IS NOT KNOWN
310168	CPAF CUT CORE W/ WATERJET	30	CONTINGENCY WAS ADDED AS EXACT METHOD AND SCOPE OF WORK EXPECTED IS NOT KNOWN
310172	CPAF FAB & INSTALL 12" RISER	30	CONTINGENCY WAS ADDED AS EXACT METHOD AND SCOPE OF WORK EXPECTED IS NOT KNOWN
310182	BURNOUT	30	CONTINGENCY WAS ADDED AS EXACT METHOD AND SCOPE OF WORK EXPECTED IS NOT KNOWN
330068	WHC BURIAL CHARGE	30	CONTINGENCY WAS ADDED AS EXACT METHOD AND SCOPE OF WORK EXPECTED IS NOT KNOWN

TOTAL 700 SPECIAL EQUIP/PROCESS SYSTEM 30

AVERAGE CONSTRUCTION CONTINGENCY 30%

AVERAGE PROJECT CONTINGENCY 30%

WBS	DESCRIPTION	ESTIMATE SUBTOTAL	CONTRACT %	ADMINISTRATION TOTAL	BID PACK PREP.	OTHER INDIRECTS	TOTAL INDIRECTS
121001	ENGINEERING/INSPECTION-ONSITE E/C	3540	0.00	0	0	0	0
310031	CPAF BUILD REUSABLE SUPPORT EQUIP	5605	0.00	0	0	0	0
310032	CPAF FAB GRNHS HVAC & TK EXHAUSTER	342166	0.00	0	0	0	0
310067	CPAF PURCHASE WATERJET & MODIFY	196804	0.00	0	0	0	0
310140	SWP AND SAFETY SUPPORT/ CONFINED SP	15589	0.00	0	0	0	0
310141	CPAF MOVE IN/ SETUP	23671	0.00	0	0	0	0
310153	CPAF HAND EXCAV. RISER W/ CAISSON	15250	0.00	0	0	0	0
310168	CPAF CUT CORE W/ WATERJET	5314	0.00	0	0	0	0
310172	CPAF FAB & INSTALL 12" RISER	13634	0.00	0	0	0	0
310182	BURNOUT	59773	0.00	0	0	0	0
330068	WHC BURIAL CHARGE	40655	0.00	0	0	0	0
	PROJECT TOTAL	722,001		0	0	0	0

KAISER ENGINEERS HANFORD
WESTINGHOUSE HANFORD COMPANY
JOB NO. Z198 / ER5511
FILE NO. Z198SDB2

** IEST - INTERACTIVE ESTIMATING **
12" RISER IN S.S. TANKS USING ROTARY DRILL
STUDY -ADD 12" RISER TO EXISTING SST-100mr VERSION
DOE_R01 - PROJECT COST SUMMARY

DATE 07/29/94 08:31:56
BY SMF, DP

COST CODE	DESCRIPTION	ESCALATED TOTAL COST	CONTINGENCY %	CONTINGENCY TOTAL	TOTAL DOLLARS
000	ENGINEERING	4,000	30	1,000	5,000
700	SPECIAL EQUIP/PROCESS SYSTEMS	925,000	30	278,000	1,203,000
	PROJECT TOTAL	929,000	30	279,000	1,208,000

TYPE OF ESTIMATE STUDY JULY 29, 1994

ARCHITECT ENGINEER G Chadwick Chris H Brevick

OPERATING CONTRACTOR C. DeFigh Prior

REMARKS:

NO DESIGN OR PROJECT MANAGEMENT IS INCLUDED.

(ROUNDED/ADJUSTED TO THE NEAREST " 1,000 / 10,000 " - PERCENTAGES NOT RECALCULATED TO REFLECT ROUNDING)

KAISER ENGINEERS HANFORD
WESTINGHOUSE HANFORD COMPANY
JOB NO. Z198 / ER5511
FILE NO. Z198SEB2

** IEST - INTERACTIVE ESTIMATING **
12"RISER IN S.S. TANKS USING WATERJET & CAISSON
STUDY -ADD 12" RISERS TO EXISTING SST.100mr/NONCONG
DOE_R02 - WORK BREAKDOWN STRUCTURE SUMMARY

PAGE 2 OF 7
DATE 07/29/94 09:41:48
BY SMF, DP

WBS	DESCRIPTION	ESTIMATE SUBTOTAL	ONSITE INDIRECTS	SUB TOTAL	ESCALATION %	ESCALATION TOTAL	SUB TOTAL	CONTINGENCY %	CONTINGENCY TOTAL	TOTAL DOLLARS
121001	ENGINEERING/INSPECTION-ONSITE E/C	3540	0	3540	3.16	112	3652	30	1096	4747
SUBTOTAL 121	ENGINEERING/INSPECTION-ONSI	3540	0	3540	3.16	112	3652	30	1096	4747
SUBTOTAL 1	ENGINEERING	3540	0	3540	3.16	112	3652	30	1096	4747
310031	CPAF BUILD REUSABLE SUPPORT EQUIP	5605	0	5605	3.57	200	5805	30	1741	7546
310032	CPAF FAB GRNHS HVAC & TK EXHAUSTER	342166	0	342166	3.56	12181	354347	30	106304	460651
310067	CPAF PURCHASE WATERJET & MODIFY	196804	0	196804	3.56	7006	203810	30	61143	264953
SUBTOTAL 3100	CPAF ONE TIME CONSTR - SUBT	544575	0	544575	3.56	19387	563962	30	169188	733150
310140	SWP AND SAFETY SUPPORT/ CONFINED SP	15589	0	15589	3.56	555	16144	30	4843	20987
310141	CPAF MOVE IN/ SETUP	23671	0	23671	3.56	843	24514	30	7354	31868
310153	CPAF HAND EXCAV. RISER W/ CAISSON	15250	0	15250	3.56	543	15793	30	4738	20531
310168	CPAF CUT CORE W/ WATERJET	5314	0	5314	3.56	189	5503	30	1651	7154
310172	CPAF FAB & INSTALL 12" RISER	13634	0	13634	3.56	486	14120	30	4237	18355
310182	BURNOUT	296510	0	296510	3.56	10556	307066	30	92120	399185
SUBTOTAL 3101	CPAF COST FOR EACH TANK - S	369968	0	369968	3.56	13172	383140	30	114943	498080
SUBTOTAL 31	FA CONST-ONSITE E/C	914543	0	914543	3.56	32559	947102	30	284131	1231230
330068	WHC BURIAL CHARGE	40655	0	40655	0.00	0	40655	30	12197	52852
SUBTOTAL 33	CONSTRUCTION-O/C	40655	0	40655	0.00	0	40655	30	12197	52852
SUBTOTAL 3	CONSTRUCTION	955198	0	955198	3.41	32559	987757	30	296328	1284082
PROJECT TOTAL		958,738	0	958,738	3.41	32,671	991,409	30	297,424	1,288,829

1. DOCUMENTS AND DRAWINGS

DOCUMENTS: ENGINEERING STUDY (ISSUE B, MAY 1994)

DRAWINGS: NONE

2. MATERIAL PRICES

UNIT COSTS REPRESENT CURRENT PRICES FOR SPECIFIED MATERIAL.

3. LABOR RATES

CURRENT KEH BASE CRAFT RATES, AS ISSUED BY KEH FINANCE (EFFECTIVE 10-01-93), INCLUDE FRINGE BENEFITS, LABOR INSURANCE, TAXES AND TRAVEL WHERE APPLICABLE, PER HANFORD SITE STABILIZATION AGREEMENT, APPENDIX A (EFFECTIVE 09-06-93). NON CRAFT HOURLY RATES ARE BASED ON THE 1994 FISCAL YEAR BUDGET LIQUIDATION RATES AS ISSUED BY KEH FINANCE (EFFECTIVE 10-01-93).

4. GENERAL REQUIREMENTS/TECHNICAL SERVICES/OVERHEADS

A.) ONSITE CONSTRUCTION FORCES GENERAL REQUIREMENTS, TECHNICAL SERVICES AND CRAFT OVERHEAD COSTS ARE INCLUDED AS A COMPOSITE PERCENTAGE BASED ON THE KEH ESTIMATING FACTOR/BILLING SCHEDULE, REVISION 16, DATED OCTOBER 01, 1993. THE TOTAL COMPOSITE PERCENTAGE APPLIED TO ONSITE CONSTRUCTION FORCES LABOR, FOR THIS PROJECT, IS 94% FOR SHOP WORK AND 136% FOR FIELD WORK, WHICH IS REFLECTED IN THE "OH&P/B&I" COLUMN OF THE ESTIMATE DETAIL.

B.) ONSITE CONTRACT ADMINISTRATION AND CONSTRUCTION MANAGEMENT COSTS, ASSOCIATED WITH THE OVERALL MANAGEMENT OF THE FIXED PRICE CONTRACTS, ARE INCLUDED AS A COMPOSITE PERCENTAGE AND LUMP SUM ALLOWANCE (FOR BID PACKAGE PREP) BASED ON THE ESTIMATING FACTOR/BILLING SCHEDULE. THE TOTAL COMPOSITE PERCENTAGE AND LUMP SUM ALLOWANCE ARE APPLIED AGAINST THE TOTAL FIXED PRICE CONTRACT AMOUNT WHICH IS REFLECTED ON THE KEH SUMMARY REPORT DOER07, INCLUDED WITH THIS ESTIMATE. (FINAL ESTIMATES MAY BE PARTIALLY MANLOADED AND INCLUDED WITHIN THE ESTIMATE DETAIL)

5. ESCALATION

ESCALATION PERCENTAGES WERE CALCULATED BY THE HANFORD MATERIAL & LABOR ESCALATION STUDY, DATED FEBRUARY 1994. ESCALATION HAS BEEN CALCULATED USING JUNE 1994 RATES.

6. ROUNDING

U.S. DEPARTMENT OF ENERGY - DOE ORDER 5100.4 PAGE I-32 SUBPARAGRAPH (M), REQUIRES ROUNDING OF ALL GENERAL PLANT PROJECTS (GPP'S) AND LINE ITEM (LI) COST ESTIMATES. REFERENCE: DOE 5100.4, FIGURE I-11, DATED 10-31-84.

7. REMARKS

A.) ALL CONSTRUCTION IS ESTIMATED AS BY CPAF. E. & I. IS BY CPAF.
B.) NO DESIGN, PROJECT MANAGEMENT, OR WHC PROJECT MANAGEMENT IS INCLUDED.
C.) ALL EXCAVATED DIRT IS BARRELLED & REPLACED.
D.) NO ESCALATION IS APPLIED TO WBS 33 (WASTE BURIAL CHARGE) AS THE COST PER CUBIC FOOT ($173) COMES FROM THE 5 YEAR PROJECTION.

KAISER ENGINEERS HANFORD
WESTINGHOUSE HANFORD COMPANY
JOB NO. Z198 / ER5511
FILE NO. Z198SEB2

** IEST - INTERACTIVE ESTIMATING **
12"RISER IN S.S. TANKS USING WATERJET & CAISSON
STUDY -ADD 12" RISERS TO EXISTING SST.100mr/NONCONG
DOE_R04 - COST CODE ACCOUNT SUMMARY

DATE 07/29/94 09:41:50
BY SMF, DP

COST CODE/WBS	DESCRIPTION	ESTIMATE SUBTOTAL	ONSITE INDIRECTS	SUB TOTAL	ESCALATION %	ESCALATION TOTAL	SUB TOTAL	CONTINGENCY %	CONTINGENCY TOTAL	TOTAL DOLLARS
000	ENGINEERING									
121001	ENGINEERING/INSPECTION-ONSITE E/C	3540	0	3540	3.16	112	3652	30	1096	4747
TOTAL 000	ENGINEERING	3540	0	3540	3.16	112	3652	30	1096	4747
700	SPECIAL EQUIP/PROCESS SYSTEMS									
310031	CPAF BUILD REUSABLE SUPPORT EQUIP	5605	0	5605	3.57	200	5805	30	1741	7546
310032	CPAF FAB GRNHS HVAC & TK EXHAUSTER	342166	0	342166	3.56	12181	354347	30	106304	460651
310067	CPAF PURCHASE WATERJET & MODIFY	196804	0	196804	3.56	7006	203810	30	61143	264953
310140	SWP AND SAFETY SUPPORT/ CONFINED SP	15589	0	15589	3.56	555	16144	30	4843	20987
310141	CPAF MOVE IN/ SETUP	23671	0	23671	3.56	843	24514	30	7354	31868
310153	CPAF HAND EXCAV. RISER W/ CAISSON	15250	0	15250	3.56	543	15793	30	4738	20531
310168	CPAF CUT CORE W/ WATERJET	5314	0	5314	3.56	189	5503	30	1651	7154
310172	CPAF FAB & INSTALL 12" RISER	13634	0	13634	3.56	486	14120	30	4237	18355
310182	BURNOUT	296510	0	296510	3.56	10556	307066	30	92120	399185
330068	WHC BURIAL CHARGE	40655	0	40655	0.00	0	40655	30	12197	52852
TOTAL 700	SPECIAL EQUIP/PROCESS SYSTEM	955198	0	955198	3.41	32559	987757	30	296328	1284082
PROJECT TOTAL		958,738	0	958,738	3.41	32,671	991,409	30	297,424	1,288,829

KAISER ENGINEERS HANFORD
WESTINGHOUSE HANFORD COMPANY
JOB NO. Z198 / ER5511
FILE NO. Z198SEB2

** IEST - INTERACTIVE ESTIMATING **
12"RISER IN S.S. TANKS USING WATERJET & CAISSON
STUDY -ADD 12" RISERS TO EXISTING SST.100mr/NONCONG
DOE_R05 - ESTIMATE SUMMARY BY CSI DIVISION

PAGE 5 OF 7
DATE 07/29/94 09:41:52
BY SMF, DP

CSI	DESCRIPTION	ESTIMATE SUBTOTAL	ONSITE INDIRECTS	SUB TOTAL	ESCALATION %	ESCALATION TOTAL	SUB TOTAL	CONTINGENCY %	CONTINGENCY TOTAL	TOTAL DOLLARS
ENGINEERING										
00	TECHNICAL SERVICES	3540	0	3540	3.16	112	3652	30	1096	4747
	TOTAL ENGINEERING	3,540	0	3,540	3.16	112	3,652	30	1,096	4,747
CONSTRUCTION										
02	SITEWORK	599693	0	599693	3.32	19903	619596	30	185879	805473
03	CONCRETE	2867	0	2867	3.56	102	2969	30	891	3860
15	MECHANICAL	352638	0	352638	3.56	12554	365192	30	109558	474749
	TOTAL CONSTRUCTION	955,198	0	955,198	3.41	32,559	987,757	30	296,328	1,284,082
PROJECT TOTAL		958,738	0	958,738	3.41	32,671	991,409	30	297,424	1,288,829

REFERENCE: ESTIMATE BASIS SHEET PAGE 3 OF 7
COST CODE ACCOUNT SUMMARY PAGE 4 OF 7

THE U.S. DEPARTMENT OF ENERGY - RICHLAND ORDER 5700.3 "COST ESTIMATING, ANALYSIS AND STANDARDIZATION" DATED 3-27-85, PROVIDES GUIDELINES FOR ESTIMATE CONTINGENCIES. THE GUIDELINE FOR A STUDY ESTIMATE SHOULD HAVE AN OVERALL RANGE OF 20 TO 30% .

CONTINGENCY IS EVALUATED AT THE THIRD COST CODE LEVEL AND SUMMARIZED AT THE PRIMARY AND SECONDARY COST CODE LEVEL OF THE DETAILED COST ESTIMATE.

000 ENGINEERING

121001	ENGINEERING/INSPECTION-ONSITE E/C	30%	CONTINGENCY WAS ADDED AS INSPECTION WILL HAVE SAME PROBLEMS AS CONSTRUCTION

AVERAGE ENGINEERING CONTINGENCY 30%

700 SPECIAL EQUIP/PROCESS SYSTEMS

310031	CPAF BUILD REUSABLE GREENHOUSE	30%	CONTINGENCY WAS ADDED AS DESIGN OF GREENHOUSE COULD VARY
310032	CPAF FAB GRNHS HVAC & TK EXHAUSTER	30	CONTINGENCY WAS ADDED AS SPECIFICATIONS FOR HVAC EQUIPMENT WILL CHANGE
310067	CPAF PURCHASE WATERJET & MODIFY	30	CONTINGENCY WAS ADDED AS ACTUAL SPEC FOR WATERJET PURCHASE MAY CAUSE INCREASE
310140	SWP AND SAFETY SUPPORT	30	CONTINGENCY WAS ADDED AS EXACT METHOD AND SCOPE OF WORK EXPECTED IS NOT KNOWN
310141	CPAF MOVE IN/ SETUP	30	CONTINGENCY WAS ADDED AS EXACT METHOD AND SCOPE OF WORK EXPECTED IS NOT KNOWN
310153	CPAF HAND EXCAV. RISER W/ CAISSON	30	CONTINGENCY WAS ADDED AS EXACT METHOD AND SCOPE OF WORK EXPECTED IS NOT KNOWN
310168	CPAF CUT CORE W/ WATERJET	30	CONTINGENCY WAS ADDED AS EXACT METHOD AND SCOPE OF WORK EXPECTED IS NOT KNOWN
310172	CPAF FAB & INSTALL 12" RISER	30	CONTINGENCY WAS ADDED AS EXACT METHOD AND SCOPE OF WORK EXPECTED IS NOT KNOWN
310182	BURNOUT	30	CONTINGENCY WAS ADDED AS EXACT METHOD AND SCOPE OF WORK EXPECTED IS NOT KNOWN
330068	WHC BURIAL CHARGE	30	CONTINGENCY WAS ADDED AS EXACT METHOD AND SCOPE OF WORK EXPECTED IS NOT KNOWN

TOTAL 700 SPECIAL EQUIP/PROCESS SYSTEM 30

AVERAGE CONSTRUCTION CONTINGENCY 30%

AVERAGE PROJECT CONTINGENCY 30%

KAISER ENGINEERS HANFORD
WESTINGHOUSE HANFORD COMPANY
JOB NO. Z198 / ER5511
FILE NO. Z198SEB2

** IEST - INTERACTIVE ESTIMATING **
12"RISER IN S.S. TANKS USING WATERJET & CAISSON
STUDY -ADD 12" RISERS TO EXISTING SST.100mr/NONCONG
DOE_R07 - ONSITE INDIRECT COSTS BY WBS

DATE 07/29/94 09:41:54
BY SMF, DP

WBS	DESCRIPTION	ESTIMATE SUBTOTAL	CONTRACT %	ADMINISTRATION TOTAL	BID PACK PREP.	OTHER INDIRECTS	TOTAL INDIRECTS
121001	ENGINEERING/INSPECTION-ONSITE E/C	3540	0.00	0	0	0	0
310031	CPAF BUILD REUSABLE SUPPORT EQUIP	5605	0.00	0	0	0	0
310032	CPAF FAB GRNHS HVAC & TK EXHAUSTER	342166	0.00	0	0	0	0
310067	CPAF PURCHASE WATERJET & MODIFY	196804	0.00	0	0	0	0
310140	SWP AND SAFETY SUPPORT/ CONFINED SP	15589	0.00	0	0	0	0
310141	CPAF MOVE IN/ SETUP	23671	0.00	0	0	0	0
310153	CPAF HAND EXCAV. RISER W/ CAISSON	15250	0.00	0	0	0	0
310168	CPAF CUT CORE W/ WATERJET	5314	0.00	0	0	0	0
310172	CPAF FAB & INSTALL 12" RISER	13634	0.00	0	0	0	0
310182	BURNOUT	296510	0.00	0	0	0	0
330068	WHC BURIAL CHARGE	40655	0.00	0	0	0	0
	PROJECT TOTAL.	958,738		0	0	0	0

KAISER ENGINEERS HANFORD
WESTINGHOUSE HANFORD COMPANY
JOB NO. Z198 / ER5511
FILE NO. Z198SDC2

** IEST - INTERACTIVE ESTIMATING **
12" RISER IN S.S. TANKS USING ROTARY DRILL
STUDY -ADD 12" RISER TO EXISTING SST-500mr VERSION
DOE_R01 - PROJECT COST SUMMARY

DATE 07/29/94 08:34:20
BY SMF, DP

COST CODE	DESCRIPTION	ESCALATED TOTAL COST	CONTINGENCY %	CONTINGENCY TOTAL	TOTAL DOLLARS
000	ENGINEERING	4,000	30	1,000	5,000
700	SPECIAL EQUIP/PROCESS SYSTEMS	2,854,000	30	856,000	3,710,000
	PROJECT TOTAL	2,858,000	30	857,000	3,715,000

TYPE OF ESTIMATE STUDY JULY 29, 1994

ARCHITECT ENGINEER G. Chadwick Chris H Bevick

OPERATING CONTRACTOR C. DeFigh-Price 8/10/94

REMARKS:

NO DESIGN OR PROJECT MANAGEMENT IS INCLUDED.

(ROUNDED/ADJUSTED TO THE NEAREST " 1,000 / 10,000 " - PERCENTAGES NOT RECALCULATED TO REFLECT ROUNDING)

** IEST - INTERACTIVE ESTIMATING **
12"RISER IN S.S. TANKS USING WATERJET & CAISSON
STUDY -ADD 12" RISERS TO EXISTING SST.500mr/NONCONG
DOE_R02 - WORK BREAKDOWN STRUCTURE SUMMARY

WBS	DESCRIPTION	ESTIMATE SUBTOTAL	ONSITE INDIRECTS	SUB TOTAL	ESCALATION %	ESCALATION TOTAL	SUB TOTAL	CONTINGENCY %	CONTINGENCY TOTAL	TOTAL DOLLARS
121001	ENGINEERING/INSPECTION-ONSITE E/C	3540	0	3540	3.16	112	3652	30	1096	4747
SUBTOTAL 121	ENGINEERING/INSPECTION-ONSI	3540	0	3540	3.16	112	3652	30	1096	4747
SUBTOTAL 1	ENGINEERING	3540	0	3540	3.16	112	3652	30	1096	4747
310031	CPAF BUILD REUSABLE SUPPORT EQUIP	5605	0	5605	3.57	200	5805	30	1741	7546
310032	CPAF FAB GRNHS HVAC & TK EXHAUSTER	342166	0	342166	3.56	12181	354347	30	106304	460651
310067	CPAF PURCHASE WATERJET & MODIFY	196804	0	196804	3.56	7006	203810	30	61143	264953
SUBTOTAL 3100	CPAF ONE TIME CONSTR - SUBT	544575	0	544575	3.56	19387	563962	30	169188	733150
310140	SWP AND SAFETY SUPPORT/ CONFINED SP	15589	0	15589	3.56	555	16144	30	4843	20987
310141	CPAF MOVE IN/ SETUP	23671	0	23671	3.56	843	24514	30	7354	31868
310153	CPAF HAND EXCAV. RISER W/ CAISSON	15250	0	15250	3.56	543	15793	30	4738	20531
310168	CPAF CUT CORE W/ WATERJET	5314	0	5314	3.56	189	5503	30	1651	7154
310172	CPAF FAB & INSTALL 12" RISER	13634	0	13634	3.56	486	14120	30	4237	18355
310182	BURNOUT	1572235	0	1572235	3.56	55972	1628207	30	488462	2116669
SUBTOTAL 3101	CPAF COST FOR EACH TANK - S	1645693	0	1645693	3.56	58588	1704281	30	511285	2215564
SUBTOTAL 31	FA CONST-ONSITE E/C	2190268	0	2190268	3.56	77975	2268243	30	680473	2948714
330068	WHC BURIAL CHARGE	40655	0	40655	0.00	0	40655	30	12197	52852
SUBTOTAL 33	CONSTRUCTION-O/C	40655	0	40655	0.00	0	40655	30	12197	52852
SUBTOTAL 3	CONSTRUCTION	2230923	0	2230923	3.50	77975	2308898	30	692670	3001566
PROJECT TOTAL		2,234,463	0	2,234,463	3.49	78,087	2,312,550	30	693,766	3,006,313

1. DOCUMENTS AND DRAWINGS
==========
DOCUMENTS: ENGINEERING STUDY (ISSUE B, MAY 1994)

DRAWINGS: NONE

2. MATERIAL PRICES
==========
UNIT COSTS REPRESENT CURRENT PRICES FOR SPECIFIED MATERIAL.

3. LABOR RATES
==========
CURRENT KEH BASE CRAFT RATES, AS ISSUED BY KEH FINANCE (EFFECTIVE 10-01-93), INCLUDE FRINGE BENEFITS, LABOR INSURANCE, TAXES AND TRAVEL WHERE APPLICABLE, PER HANFORD SITE STABILIZATION AGREEMENT, APPENDIX A (EFFECTIVE 09-06-93). NON CRAFT HOURLY RATES ARE BASED ON THE 1994 FISCAL YEAR BUDGET LIQUIDATION RATES AS ISSUED BY KEH FINANCE (EFFECTIVE 10-01-93).

4. GENERAL REQUIREMENTS/TECHNICAL SERVICES/OVERHEADS
==========
A.) ONSITE CONSTRUCTION FORCES GENERAL REQUIREMENTS, TECHNICAL SERVICES AND CRAFT OVERHEAD COSTS ARE INCLUDED AS A COMPOSITE PERCENTAGE BASED ON THE KEH ESTIMATING FACTOR/BILLING SCHEDULE, REVISION 16, DATED OCTOBER 01, 1993. THE TOTAL COMPOSITE PERCENTAGE APPLIED TO ONSITE CONSTRUCTION FORCES LABOR, FOR THIS PROJECT, IS 94% FOR SHOP WORK AND 136% FOR FIELD WORK, WHICH IS REFLECTED IN THE "OH&P/B&I" COLUMN OF THE ESTIMATE DETAIL.
B.) ONSITE CONTRACT ADMINISTRATION AND CONSTRUCTION MANAGEMENT COSTS, ASSOCIATED WITH THE OVERALL MANAGEMENT OF THE FIXED PRICE CONTRACTS, ARE INCLUDED AS A COMPOSITE PERCENTAGE AND LUMP SUM ALLOWANCE (FOR BID PACKAGE PREP) BASED ON THE ESTIMATING FACTOR/BILLING SCHEDULE. THE TOTAL COMPOSITE PERCENTAGE AND LUMP SUM ALLOWANCE ARE APPLIED AGAINST THE TOTAL FIXED PRICE CONTRACT AMOUNT WHICH IS REFLECTED ON THE KEH SUMMARY REPORT DOER07, INCLUDED WITH THIS ESTIMATE. (FINAL ESTIMATES MAY BE PARTIALLY MANLOADED AND INCLUDED WITHIN THE ESTIMATE DETAIL)

5. ESCALATION
==========
ESCALATION PERCENTAGES WERE CALCULATED BY THE HANFORD MATERIAL & LABOR ESCALATION STUDY, DATED FEBRUARY 1994. ESCALATION HAS BEEN CALCULATED USING JUNE 1994 RATES.

6. ROUNDING
==========
U.S. DEPARTMENT OF ENERGY - DOE ORDER 5100.4 PAGE I-32 SUBPARAGRAPH (M), REQUIRES ROUNDING OF ALL GENERAL PLANT PROJECTS (GPP'S) AND LINE ITEM (LI) COST ESTIMATES. REFERENCE: DOE 5100.4, FIGURE I-11, DATED 10-31-84.

7. REMARKS
==========
A.) ALL CONSTRUCTION IS ESTIMATED AS BY CPAF. E. & I. IS BY CPAF.
B.) NO DESIGN, PROJECT MANAGEMENT, OR WHC PROJECT MANAGEMENT IS INCLUDED.
C.) ALL EXCAVATED DIRT IS BARRELLED & REPLACED.
D.) NO ESCALATION IS APPLIED TO WBS 33 (WASTE BURIAL CHARGE) AS THE COST PER CUBIC FOOT ($173) COMES FROM THE 5 YEAR PROJECTION.

KAISER ENGINEERS HANFORD
WESTINGHOUSE HANFORD COMPANY
JOB NO. Z198 / ER5511
FILE NO. Z198SEC2

** IEST - INTERACTIVE ESTIMATING **
12"RISER IN S.S. TANKS USING WATERJET & CAISSON
STUDY -ADD 12" RISERS TO EXISTING SST.500mr/NONCONG
DOE_R04 - COST CODE ACCOUNT SUMMARY

DATE 07/29/94 10:40:28
BY SMF, DP

COST CODE/WBS	DESCRIPTION	ESTIMATE SUBTOTAL	ONSITE INDIRECTS	SUB TOTAL	ESCALATION %	ESCALATION TOTAL	SUB TOTAL	CONTINGENCY %	CONTINGENCY TOTAL	TOTAL DOLLARS
000	ENGINEERING									
121001	ENGINEERING/INSPECTION-ONSITE E/C	3540	0	3540	3.16	112	3652	30	1096	4747
TOTAL 000	ENGINEERING	3540	0	3540	3.16	112	3652	30	1096	4747
700	SPECIAL EQUIP/PROCESS SYSTEMS									
310031	CPAF BUILD REUSABLE SUPPORT EQUIP	5605	0	5605	3.57	200	5805	30	1741	7546
310032	CPAF FAB GRNHS HVAC & TK EXHAUSTER	342166	0	342166	3.56	12181	354347	30	106304	460651
310067	CPAF PURCHASE WATERJET & MODIFY	196804	0	196804	3.56	7006	203810	30	61143	264953
310140	SWP AND SAFETY SUPPORT/ CONFINED SP	15589	0	15589	3.56	555	16144	30	4843	20987
310141	CPAF MOVE IN/ SETUP	23671	0	23671	3.56	843	24514	30	7354	31868
310153	CPAF HAND EXCAV. RISER W/ CAISSON	15250	0	15250	3.56	543	15793	30	4738	20531
310168	CPAF CUT CORE W/ WATERJET	5314	0	5314	3.56	189	5503	30	1651	7154
310172	CPAF FAB & INSTALL 12" RISER	13634	0	13634	3.56	486	14120	30	4237	18355
310182	BURNOUT	1572235	0	1572235	3.56	55972	1628207	30	488462	2116669
330068	WHC BURIAL CHARGE	40655	0	40655	0.00	0	40655	30	12197	52852
TOTAL 700	SPECIAL EQUIP/PROCESS SYSTEM	2230923	0	2230923	3.50	77975	2308898	30	692670	3001566
PROJECT TOTAL		2,234,463	0	2,234,463	3.49	78,087	2,312,550	30	693,766	3,006,313

KAISER ENGINEERS HANFORD
WESTINGHOUSE HANFORD COMPANY
JOB NO. Z198 / ER5511
FILE NO. Z198SEC2

** IEST - INTERACTIVE ESTIMATING **
12"RISER IN S.S. TANKS USING WATERJET & CAISSON
STUDY -ADD 12" RISERS TO EXISTING SST.500mr/NONCONG
DOE_R05 - ESTIMATE SUMMARY BY CSI DIVISION

PAGE 5 OF 7
DATE 07/29/94 10:40:30
BY SMF, DP

CSI	DESCRIPTION	ESTIMATE SUBTOTAL	ONSITE INDIRECTS	SUB TOTAL	ESCALATION %	ESCALATION TOTAL	SUB TOTAL	CONTINGENCY %	CONTINGENCY TOTAL	TOTAL DOLLARS
ENGINEERING										
00	TECHNICAL SERVICES	3540	0	3540	3.16	112	3652	30	1096	4747
	TOTAL ENGINEERING	3,540	0	3,540	3.16	112	3,652	30	1,096	4,747
CONSTRUCTION										
02	SITEWORK	1875418	0	1875418	3.48	65319	1940737	30	582221	2522957
03	CONCRETE	2867	0	2867	3.56	102	2969	30	891	3860
15	MECHANICAL	352638	0	352638	3.56	12554	365192	30	109558	474749
	TOTAL CONSTRUCTION	2,230,923	0	2,230,923	3.50	77,975	2,308,898	30	692,670	3,001,566
PROJECT TOTAL		2,234,463	0	2,234,463	3.49	78,087	2,312,550	30	693,766	3,006,313

REFERENCE: ESTIMATE BASIS SHEET PAGE 3 OF 7
COST CODE ACCOUNT SUMMARY PAGE 4 OF 7

THE U.S. DEPARTMENT OF ENERGY - RICHLAND ORDER 5700.3 "COST ESTIMATING, ANALYSIS AND STANDARDIZATION" DATED 3-27-85, PROVIDES GUIDELINES FOR ESTIMATE CONTINGENCIES. THE GUIDELINE FOR A STUDY ESTIMATE SHOULD HAVE AN OVERALL RANGE OF 20 TO 30% .

CONTINGENCY IS EVALUATED AT THE THIRD COST CODE LEVEL AND SUMMARIZED AT THE PRIMARY AND SECONDARY COST CODE LEVEL OF THE DETAILED COST ESTIMATE.

000 ENGINEERING

121001	ENGINEERING/INSPECTION-ONSITE E/C	30%	CONTINGENCY WAS ADDED AS INSPECTION WILL HAVE SAME PROBLEMS AS CONSTRUCTION

AVERAGE ENGINEERING CONTINGENCY 30%

700 SPECIAL EQUIP/PROCESS SYSTEMS

310031	CPAF BUILD REUSABLE GREENHOUSE	30%	CONTINGENCY WAS ADDED AS DESIGN OF GREENHOUSE COULD VARY
310032	CPAF FAB GRNHS HVAC & TK EXHAUSTER	30	CONTINGENCY WAS ADDED AS SPECIFICATIONS FOR HVAC EQUIPMENT WILL CHANGE
310067	CPAF PURCHASE WATERJET & MODIFY	30	CONTINGENCY WAS ADDED AS ACTUAL SPEC FOR WATERJET PURCHASE MAY CAUSE INCREASE
310140	SWP AND SAFETY SUPPORT	30	CONTINGENCY WAS ADDED AS EXACT METHOD AND SCOPE OF WORK EXPECTED IS NOT KNOWN
310141	CPAF MOVE IN/ SETUP	30	CONTINGENCY WAS ADDED AS EXACT METHOD AND SCOPE OF WORK EXPECTED IS NOT KNOWN
310153	CPAF HAND EXCAV. RISER W/ CAISSON	30	CONTINGENCY WAS ADDED AS EXACT METHOD AND SCOPE OF WORK EXPECTED IS NOT KNOWN
310168	CPAF CUT CORE W/ WATERJET	30	CONTINGENCY WAS ADDED AS EXACT METHOD AND SCOPE OF WORK EXPECTED IS NOT KNOWN
310172	CPAF FAB & INSTALL 12" RISER	30	CONTINGENCY WAS ADDED AS EXACT METHOD AND SCOPE OF WORK EXPECTED IS NOT KNOWN
310182	BURNOUT	30	CONTINGENCY WAS ADDED AS EXACT METHOD AND SCOPE OF WORK EXPECTED IS NOT KNOWN
330068	WHC BURIAL CHARGE	30	CONTINGENCY WAS ADDED AS EXACT METHOD AND SCOPE OF WORK EXPECTED IS NOT KNOWN

TOTAL 700 SPECIAL EQUIP/PROCESS SYSTEM 30

AVERAGE CONSTRUCTION CONTINGENCY 30%

AVERAGE PROJECT CONTINGENCY 30%

KAISER ENGINEERS HANFORD
WESTINGHOUSE HANFORD COMPANY
JOB NO. Z198 / ER5511
FILE NO. Z198SEC2

** IEST - INTERACTIVE ESTIMATING **
12"RISER IN S.S. TANKS USING WATERJET & CAISSON
STUDY -ADD 12" RISERS TO EXISTING SST.500mr/NONCONG
DOE_R07 - ONSITE INDIRECT COSTS BY WBS

DATE 07/29/94 10:40:32
BY SMF, DP

WBS	DESCRIPTION	ESTIMATE SUBTOTAL	CONTRACT %	ADMINISTRATION TOTAL	BID PACK PREP.	OTHER INDIRECTS	TOTAL INDIRECTS
121001	ENGINEERING/INSPECTION-ONSITE E/C	3540	0.00	0	0	0	0
310031	CPAF BUILD REUSABLE SUPPORT EQUIP	5605	0.00	0	0	0	0
310032	CPAF FAB GRNHS HVAC & TK EXHAUSTER	342166	0.00	0	0	0	0
310067	CPAF PURCHASE WATERJET & MODIFY	196804	0.00	0	0	0	0
310140	SWP AND SAFETY SUPPORT/ CONFINED SP	15589	0.00	0	0	0	0
310141	CPAF MOVE IN/ SETUP	23671	0.00	0	0	0	0
310153	CPAF HAND EXCAV. RISER W/ CAISSON	15250	0.00	0	0	0	0
310168	CPAF CUT CORE W/ WATERJET	5314	0.00	0	0	0	0
310172	CPAF FAB & INSTALL 12" RISER	13634	0.00	0	0	0	0
310182	BURNOUT	1572235	0.00	0	0	0	0
330068	WHC BURIAL CHARGE	40655	0.00	0	0	0	0
	PROJECT TOTAL	2,234,463		0	0	0	0

KAISER ENGINEERS HANFORD
WESTINGHOUSE HANFORD COMPANY
JOB NO. Z198 / ER5511
FILE NO. Z198SEB2

** IEST - INTERACTIVE ESTIMATING **
12"RISER IN S.S. TANKS USING WATERJET & CAISSON
STUDY -ADD 12" RISERS TO EXISTING SST.100mr/NONCONG
DOE_R01 - PROJECT COST SUMMARY

PAGE 1 OF 7
DATE 07/29/94 09:41:45
BY SMF, DP

COST CODE	DESCRIPTION	ESCALATED TOTAL COST	CONTINGENCY %	CONTINGENCY TOTAL	TOTAL DOLLARS
000	ENGINEERING	4,000	30	1,000	5,000
700	SPECIAL EQUIP/PROCESS SYSTEMS	988,000	30	296,000	1,284,000
	PROJECT TOTAL	992,000	30	297,000	1,289,000

TYPE OF ESTIMATE STUDY JULY 29, 1994

ARCHITECT ENGINEER G Chadwick Chris H Brevick

OPERATING CONTRACTOR C. Dwight-Price 8/10/94

REMARKS:

NO DESIGN OR PROJECT MANAGEMENT IS INCLUDED.

(ROUNDED/ADJUSTED TO THE NEAREST " 1,000 / 10,000 " - PERCENTAGES NOT RECALCULATED TO REFLECT ROUNDING)

KAISER ENGINEERS HANFORD
WESTINGHOUSE HANFORD COMPANY
JOB NO. Z198 / ER5511
FILE NO. Z198SFA2

** IEST - INTERACTIVE ESTIMATING **
12" RISER IN S.S. TANKS USING STRADDLE CRANE
STUDY -ADD 12" RISER TO EXISTING SST - 25mr VERSION
DOE_R02 - WORK BREAKDOWN STRUCTURE SUMMARY

DATE 07/29/94 07:30:03
BY SMF/ DP

WBS	DESCRIPTION	ESTIMATE SUBTOTAL	ONSITE INDIRECTS	SUB TOTAL	ESCALATION %	ESCALATION TOTAL	SUB TOTAL	CONTINGENCY %	CONTINGENCY TOTAL	TOTAL DOLLARS
121001	ENGINEERING/INSPECTION-ONSITE E/C	3540	0	3540	3.16	112	3652	30	1096	4747
SUBTOTAL 121	ENGINEERING/INSPECTION-ONSI	3540	0	3540	3.16	112	3652	30	1096	4747
SUBTOTAL 1	ENGINEERING	3540	0	3540	3.16	112	3652	30	1096	4747
310031	CPAF BUILD REUSABLE SUPPORT EQUIP	4765	0	4765	3.57	170	4935	30	1480	6415
310032	CPAF FAB GRNHS HVAC & TK EXHAUSTER	342166	0	342166	3.56	12181	354347	30	106304	460651
310064	CPAF PURCHASE STRADDLE CRANE	1012510	0	1012510	3.56	36045	1048555	30	314567	1363122
SUBTOTAL 3100	CPAF ONE TIME CONSTR - SUBT	1359441	0	1359441	3.56	48396	1407837	30	422351	1830188
310140	SWP AND SAFETY SUPPORT	21454	0	21454	3.56	764	22218	30	6665	28883
310141	CPAF MOVE IN/ SETUP SUPPORT FACIL.	44296	0	44296	3.56	1577	45873	30	13762	59635
310165	CPAF COREDRILL W/ STRADDLE CRANE	23934	0	23934	3.56	853	24787	30	7436	32221
310172	CPAF FAB & INSTALL 12" RISER	13628	0	13628	3.57	486	14114	30	4235	18347
310182	BURNOUT	67954	0	67954	3.56	2419	70373	30	21112	91485
SUBTOTAL 3101	CPAF COST FOR EACH TANK - S	171266	0	171266	3.56	6099	177365	30	53210	230571
SUBTOTAL 31	FA CONST-ONSITE E/C	1530707	0	1530707	3.56	54495	1585202	30	475561	2060759
330065	WHC BURIAL CHARGES	6401	0	6401	0.00	0	6401	30	1920	8321
SUBTOTAL 33	CONSTRUCTION-O/C	6401	0	6401	0.00	0	6401	30	1920	8321
SUBTOTAL 3	CONSTRUCTION	1537108	0	1537108	3.55	54495	1591603	30	477481	2069080
PROJECT TOTAL		1,540,648	0	1,540,648	3.54	54,607	1,595,255	30	478,577	2,073,827

1. DOCUMENTS AND DRAWINGS

DOCUMENTS: ENGINEERING STUDY (ISSUE B, MAY 1994)

DRAWINGS: NONE

2. MATERIAL PRICES

UNIT COSTS REPRESENT CURRENT PRICES FOR SPECIFIED MATERIAL.

3. LABOR RATES

CURRENT KEH BASE CRAFT RATES, AS ISSUED BY KEH FINANCE (EFFECTIVE 10-01-93), INCLUDE FRINGE BENEFITS, LABOR INSURANCE, TAXES AND TRAVEL WHERE APPLICABLE, PER HANFORD SITE STABILIZATION AGREEMENT, APPENDIX A (EFFECTIVE 09-06-93). NON CRAFT HOURLY RATES ARE BASED ON THE 1994 FISCAL YEAR BUDGET LIQUIDATION RATES AS ISSUED BY KEH FINANCE (EFFECTIVE 10-01-93).

4. GENERAL REQUIREMENTS/TECHNICAL SERVICES/OVERHEADS

A.) ONSITE CONSTRUCTION FORCES GENERAL REQUIREMENTS, TECHNICAL SERVICES AND CRAFT OVERHEAD COSTS ARE INCLUDED AS A COMPOSITE PERCENTAGE BASED ON THE KEH ESTIMATING FACTOR/BILLING SCHEDULE, REVISION 16, DATED OCTOBER 01, 1993. THE TOTAL COMPOSITE PERCENTAGE APPLIED TO ONSITE CONSTRUCTION FORCES LABOR, FOR THIS PROJECT, IS 94% FOR SHOP WORK AND 136% FOR FIELD WORK, WHICH IS REFLECTED IN THE "OH&P/B&I" COLUMN OF THE ESTIMATE DETAIL.

B.) ONSITE CONTRACT ADMINISTRATION AND CONSTRUCTION MANAGEMENT COSTS, ASSOCIATED WITH THE OVERALL MANAGEMENT OF THE FIXED PRICE CONTRACTS, ARE INCLUDED AS A COMPOSITE PERCENTAGE AND LUMP SUM ALLOWANCE (FOR BID PACKAGE PREP) BASED ON THE ESTIMATING FACTOR/BILLING SCHEDULE. THE TOTAL COMPOSITE PERCENTAGE AND LUMP SUM ALLOWANCE ARE APPLIED AGAINST THE TOTAL FIXED PRICE CONTRACT AMOUNT WHICH IS REFLECTED ON THE KEH SUMMARY REPORT DOER07, INCLUDED WITH THIS ESTIMATE. (FINAL ESTIMATES MAY BE PARTIALLY MANLOADED AND INCLUDED WITHIN THE ESTIMATE DETAIL)

5. ESCALATION

ESCALATION PERCENTAGES WERE CALCULATED BY THE HANFORD MATERIAL & LABOR ESCALATION STUDY, DATED FEBRUARY 1994. ESCALATION HAS BEEN CALCULATED USING JUNE 1994 RATES.

6. ROUNDING

U.S. DEPARTMENT OF ENERGY - DOE ORDER 5100.4 PAGE I-32 SUBPARAGRAPH (M), REQUIRES ROUNDING OF ALL GENERAL PLANT PROJECTS (GPP'S) AND LINE ITEM (LI) COST ESTIMATES. REFERENCE: DOE 5100.4, FIGURE I-11, DATED 10-31-84.

7. REMARKS

A.) ALL CONSTRUCTION IS ESTIMATED AS BY CPAF. E. & I. IS BY CPAF.
B.) NO DESIGN, PROJECT MANAGEMENT, OR WHC PROJECT MANAGEMENT IS INCLUDED.
C.) ALL EXCAVATED DIRT IS BARRELLED & REPLACED.
D.) NO ESCALATION IS APPLIED TO WBS 33 (WASTE BURIAL CHARGE) AS THE COST PER CUBIC FOOT ($173) COMES FROM THE 5 YEAR PROJECTION.

KAISER ENGINEERS HANFORD
WESTINGHOUSE HANFORD COMPANY
JOB NO. Z198 / ER5511
FILE NO. Z198SFA2

** IEST - INTERACTIVE ESTIMATING **
12" RISER IN S.S. TANKS USING STRADDLE CRANE
STUDY -ADD 12" RISER TO EXISTING SST - 25mr VERSION
DOE_R04 - COST CODE ACCOUNT SUMMARY

DATE 07/29/94 07:30:05
BY SMF/ DP

COST CODE/WBS	DESCRIPTION	ESTIMATE SUBTOTAL	ONSITE INDIRECTS	SUB TOTAL	ESCALATION %	ESCALATION TOTAL	SUB TOTAL	CONTINGENCY %	CONTINGENCY TOTAL	TOTAL DOLLARS
000	ENGINEERING									
121001	ENGINEERING/INSPECTION-ONSITE E/C	3540	0	3540	3.16	112	3652	30	1096	4747
TOTAL 000	ENGINEERING	3540	0	3540	3.16	112	3652	30	1096	4747
700	SPECIAL EQUIP/PROCESS SYSTEMS									
310031	CPAF BUILD REUSABLE SUPPORT EQUIP	4765	0	4765	3.57	170	4935	30	1480	6415
310032	CPAF FAB GRNHS HVAC & TK EXHAUSTER	342166	0	342166	3.56	12181	354347	30	106304	460651
310064	CPAF PURCHASE STRADDLE CRANE	1012510	0	1012510	3.56	36045	1048555	30	314567	1363122
310140	SWP AND SAFETY SUPPORT	21454	0	21454	3.56	764	22218	30	6665	28883
310141	CPAF MOVE IN/ SETUP SUPPORT FACIL.	44296	0	44296	3.56	1577	45873	30	13762	59635
310165	CPAF COREDRILL W/ STRADDLE CRANE	23934	0	23934	3.56	853	24787	30	7436	32221
310172	CPAF FAB & INSTALL 12" RISER	13628	0	13628	3.57	486	14114	30	4235	18347
310182	BURNOUT	67954	0	67954	3.56	2419	70373	30	21112	91485
330065	WHC BURIAL CHARGES	6401	0	6401	0.00	0	6401	30	1920	8321
TOTAL 700	SPECIAL EQUIP/PROCESS SYSTEM	1537108	0	1537108	3.55	54495	1591603	30	477481	2069080
PROJECT TOTAL		1,540,648	0	1,540,648	3.54	54,607	1,595,255	30	478,577	2,073,827

KAISER ENGINEERS HANFORD
WESTINGHOUSE HANFORD COMPANY
JOB NO. Z198 / ER5511
FILE NO. Z198SFA2

** IEST - INTERACTIVE ESTIMATING **
12" RISER IN S.S. TANKS USING STRADDLE CRANE
STUDY -ADD 12" RISER TO EXISTING SST - 25mr VERSION
DOE_R05 - ESTIMATE SUMMARY BY CSI DIVISION

DATE 07/29/94 07:30:07
BY SMF/ DP

CSI	DESCRIPTION	ESTIMATE SUBTOTAL	ONSITE INDIRECTS	SUB TOTAL	ESCALATION %	ESCALATION TOTAL	SUB TOTAL	CONTINGENCY %	CONTINGENCY TOTAL	TOTAL DOLLARS
ENGINEERING										
00	TECHNICAL SERVICES	3540	0	3540	3.16	112	3652	30	1096	4747
	TOTAL ENGINEERING	3,540	0	3,540	3.16	112	3,652	30	1,096	4,747
CONSTRUCTION										
02	SITEWORK	1180733	0	1180733	3.54	41808	1222541	30	366762	1589300
03	CONCRETE	3737	0	3737	3.56	133	3870	30	1161	5031
15	MECHANICAL	352638	0	352638	3.56	12554	365192	30	109558	474749
	TOTAL CONSTRUCTION	1,537,108	0	1,537,108	3.55	54,495	1,591,603	30	477,481	2,069,080
PROJECT TOTAL		1,540,648	0	1,540,648	3.54	54,607	1,595,255	30	478,577	2,073,827

REFERENCE: ESTIMATE BASIS SHEET PAGE 3 OF 7
COST CODE ACCOUNT SUMMARY PAGE 4 OF 7

THE U.S. DEPARTMENT OF ENERGY - RICHLAND ORDER 5700.3 "COST ESTIMATING, ANALYSIS AND STANDARDIZATION" DATED 3-27-85, PROVIDES GUIDELINES FOR ESTIMATE CONTINGENCIES. THE GUIDELINE FOR A STUDY ESTIMATE SHOULD HAVE AN OVERALL RANGE OF 20 TO 30% .

CONTINGENCY IS EVALUATED AT THE THIRD COST CODE LEVEL AND SUMMARIZED AT THE PRIMARY AND SECONDARY COST CODE LEVEL OF THE DETAILED COST ESTIMATE.

000 ENGINEERING

121001	ENGINEERING/INSPECTION-ONSITE E/C	30%	CONTINGENCY WAS ADDED AS INSPECTION WILL HAVE SAME PROBLEMS AS CONSTRUCTION

AVERAGE ENGINEERING CONTINGENCY 30%

700 SPECIAL EQUIP/PROCESS SYSTEMS

310031	CPAF BUILD REUSABLE GREENHOUSE	30%	CONTINGENCY WAS ADDED AS DESIGN OF GREENHOUSE COULD VARY
310032	CPAF FAB GRNHS HVAC & TK EXHAUSTER	30	CONTINGENCY WAS ADDED AS SPECIFICATIONS FOR HVAC EQUIPMENT WILL CHANGE
310064	CPAF PURCHASE STRADDLE CRANE	30	CONTINGENCY WAS ADDED AS PURCHASE PRICE OF CRANE WILL VARY WITH ACTUAL SPEC
310140	SWP AND SAFETY SUPPORT	30	CONTINGENCY WAS ADDED AS EXACT METHOD AND SCOPE OF WORK EXPECTED IS NOT KNOWN
310141	CPAF MOVE IN/ SETUP	30	CONTINGENCY WAS ADDED AS EXACT METHOD AND SCOPE OF WORK EXPECTED IS NOT KNOWN
310165	CPAF COREDRILL W/ STRADDLE CRANE	30	CONTINGENCY WAS ADDED AS EXACT METHOD AND SCOPE OF WORK EXPECTED IS NOT KNOWN
310172	CPAF FAB & INSTALL 12" RISER	30	CONTINGENCY WAS ADDED AS EXACT METHOD AND SCOPE OF WORK EXPECTED IS NOT KNOWN
310182	BURNOUT	30	CONTINGENCY WAS ADDED AS EXACT METHOD AND SCOPE OF WORK EXPECTED IS NOT KNOWN
330065	WHC BURIAL CHARGE	30	CONTINGENCY WAS ADDED AS EXACT METHOD AND SCOPE OF WORK EXPECTED IS NOT KNOWN

TOTAL 700 SPECIAL EQUIP/PROCESS SYSTEM 30

AVERAGE CONSTRUCTION CONTINGENCY 30%

AVERAGE PROJECT CONTINGENCY 30%

KAISER ENGINEERS HANFORD
WESTINGHOUSE HANFORD COMPANY
JOB NO. Z198 / ER5511
FILE NO. Z198SFA2

** IEST - INTERACTIVE ESTIMATING **
12" RISER IN S.S. TANKS USING STRADDLE CRANE
STUDY -ADD 12" RISER TO EXISTING SST - 25mr VERSION
DOE_R07 - ONSITE INDIRECT COSTS BY WBS

DATE 07/29/94 07:30:09
BY SMF/ DP

WBS	DESCRIPTION	ESTIMATE SUBTOTAL	CONTRACT ADMINISTRATION %	CONTRACT ADMINISTRATION TOTAL	BID PACK PREP.	OTHER INDIRECTS	TOTAL INDIRECTS
121001	ENGINEERING/INSPECTION-ONSITE E/C	3540	0.00	0	0	0	0
310031	CPAF BUILD REUSABLE SUPPORT EQUIP	4765	0.00	0	0	0	0
310032	CPAF FAB GRNHS HVAC & TK EXHAUSTER	342166	0.00	0	0	0	0
310064	CPAF PURCHASE STRADDLE CRANE	1012510	0.00	0	0	0	0
310140	SWP AND SAFETY SUPPORT	21454	0.00	0	0	0	0
310141	CPAF MOVE IN/ SETUP SUPPORT FACIL.	44296	0.00	0	0	0	0
310165	CPAF COREDRILL W/ STRADDLE CRANE	23934	0.00	0	0	0	0
310172	CPAF FAB & INSTALL 12" RISER	13628	0.00	0	0	0	0
310182	BURNOUT	67954	0.00	0	0	0	0
330065	WHC BURIAL CHARGES	6401	0.00	0	0	0	0
	PROJECT TOTAL	1,540,648		0	0	0	0

KAISER ENGINEERS HANFORD
WESTINGHOUSE HANFORD COMPANY
JOB NO. Z198 / ER5511
FILE NO. Z198SEC2

** IEST - INTERACTIVE ESTIMATING **
12"RISER IN S.S. TANKS USING WATERJET & CAISSON
STUDY -ADD 12" RISERS TO EXISTING SST.500mr/NONCONG
DOE_R01 - PROJECT COST SUMMARY

DATE 07/29/94 10:40:23
BY SMF, DP

COST CODE	DESCRIPTION	ESCALATED TOTAL COST	CONTINGENCY %	CONTINGENCY TOTAL	TOTAL DOLLARS
000	ENGINEERING	4,000	30	1,000	5,000
700	SPECIAL EQUIP/PROCESS SYSTEMS	2,309,000	30	693,000	3,002,000
	PROJECT TOTAL	2,313,000	30	694,000	3,007,000

TYPE OF ESTIMATE STUDY JULY 29, 1994

ARCHITECT ENGINEER G. Chadwick Chris H Brevick

OPERATING CONTRACTOR C. Detzler-Prui 8/10/94

REMARKS:

NO DESIGN OR PROJECT MANAGEMENT IS INCLUDED.

(ROUNDED/ADJUSTED TO THE NEAREST " 1,000 / 10,000 " - PERCENTAGES NOT RECALCULATED TO REFLECT ROUNDING)

KAISER ENGINEERS HANFORD
WESTINGHOUSE HANFORD COMPANY
JOB NO. Z198 / ER5511
FILE NO. Z198SFB2

** IEST - INTERACTIVE ESTIMATING **
12" RISER IN S.S. TANKS USING STRADDLE CRANE
STUDY -ADD 12" RISER TO EXISTING SST -100mr VERSION
DOE_R02 - WORK BREAKDOWN STRUCTURE SUMMARY

DATE 07/29/94 09:51:04
BY SMF/ DP

WBS	DESCRIPTION	ESTIMATE SUBTOTAL	ONSITE INDIRECTS	SUB TOTAL	ESCALATION %	ESCALATION TOTAL	SUB TOTAL	CONTINGENCY %	CONTINGENCY TOTAL	TOTAL DOLLARS
121001	ENGINEERING/INSPECTION-ONSITE E/C	3540	0	3540	3.16	112	3652	30	1096	4747
SUBTOTAL 121	ENGINEERING/INSPECTION-ONSI	3540	0	3540	3.16	112	3652	30	1096	4747
SUBTOTAL 1	ENGINEERING	3540	0	3540	3.16	112	3652	30	1096	4747
310031	CPAF BUILD REUSABLE SUPPORT EQUIP	4765	0	4765	3.57	170	4935	30	1480	6415
310032	CPAF FAB GRNHS HVAC & TK EXHAUSTER	342166	0	342166	3.56	12181	354347	30	106304	460651
310064	CPAF PURCHASE STRADDLE CRANE	1012510	0	1012510	3.56	36045	1048555	30	314567	1363122
SUBTOTAL 3100	CPAF ONE TIME CONSTR - SUBT	1359441	0	1359441	3.56	48396	1407837	30	422351	1830188
310140	SWP AND SAFETY SUPPORT	21454	0	21454	3.56	764	22218	30	6665	28883
310141	CPAF MOVE IN/ SETUP SUPPORT FACIL.	44296	0	44296	3.56	1577	45873	30	13762	59635
310165	CPAF COREDRILL W/ STRADDLE CRANE	23934	0	23934	3.56	853	24787	30	7436	32221
310172	CPAF FAB & INSTALL 12" RISER	13628	0	13628	3.57	486	14114	30	4235	18347
310182	BURNOUT	350915	0	350915	3.56	12493	363408	30	109022	472430
SUBTOTAL 3101	CPAF COST FOR EACH TANK - S	454227	0	454227	3.56	16173	470400	30	141120	611516
SUBTOTAL 31	FA CONST-ONSITE E/C	1813668	0	1813668	3.56	64569	1878237	30	563471	2441704
330065	WHC BURIAL CHARGES	6401	0	6401	0.00	0	6401	30	1920	8321
SUBTOTAL 33	CONSTRUCTION-O/C	6401	0	6401	0.00	0	6401	30	1920	8321
SUBTOTAL 3	CONSTRUCTION	1820069	0	1820069	3.55	64569	1884638	30	565391	2450029
PROJECT TOTAL		1,823,609	0	1,823,609	3.55	64,681	1,888,290	30	566,487	2,454,772

1. DOCUMENTS AND DRAWINGS

DOCUMENTS: ENGINEERING STUDY (ISSUE B, MAY 1994)

DRAWINGS: NONE

2. MATERIAL PRICES

UNIT COSTS REPRESENT CURRENT PRICES FOR SPECIFIED MATERIAL.

3. LABOR RATES

CURRENT KEH BASE CRAFT RATES, AS ISSUED BY KEH FINANCE (EFFECTIVE 10-01-93), INCLUDE FRINGE BENEFITS, LABOR INSURANCE, TAXES AND TRAVEL WHERE APPLICABLE, PER HANFORD SITE STABILIZATION AGREEMENT, APPENDIX A (EFFECTIVE 09-06-93). NON CRAFT HOURLY RATES ARE BASED ON THE 1994 FISCAL YEAR BUDGET LIQUIDATION RATES AS ISSUED BY KEH FINANCE (EFFECTIVE 10-01-93).

4. GENERAL REQUIREMENTS/TECHNICAL SERVICES/OVERHEADS

A.) ONSITE CONSTRUCTION FORCES GENERAL REQUIREMENTS, TECHNICAL SERVICES AND CRAFT OVERHEAD COSTS ARE INCLUDED AS A COMPOSITE PERCENTAGE BASED ON THE KEH ESTIMATING FACTOR/BILLING SCHEDULE, REVISION 16, DATED OCTOBER 01, 1993. THE TOTAL COMPOSITE PERCENTAGE APPLIED TO ONSITE CONSTRUCTION FORCES LABOR, FOR THIS PROJECT, IS 94% FOR SHOP WORK AND 136% FOR FIELD WORK, WHICH IS REFLECTED IN THE "OH&P/B&I" COLUMN OF THE ESTIMATE DETAIL.

B.) ONSITE CONTRACT ADMINISTRATION AND CONSTRUCTION MANAGEMENT COSTS, ASSOCIATED WITH THE OVERALL MANAGEMENT OF THE FIXED PRICE CONTRACTS, ARE INCLUDED AS A COMPOSITE PERCENTAGE AND LUMP SUM ALLOWANCE (FOR BID PACKAGE PREP) BASED ON THE ESTIMATING FACTOR/BILLING SCHEDULE. THE TOTAL COMPOSITE PERCENTAGE AND LUMP SUM ALLOWANCE ARE APPLIED AGAINST THE TOTAL FIXED PRICE CONTRACT AMOUNT WHICH IS REFLECTED ON THE KEH SUMMARY REPORT DOER07, INCLUDED WITH THIS ESTIMATE. (FINAL ESTIMATES MAY BE PARTIALLY MANLOADED AND INCLUDED WITHIN THE ESTIMATE DETAIL)

5. ESCALATION

ESCALATION PERCENTAGES WERE CALCULATED BY THE HANFORD MATERIAL & LABOR ESCALATION STUDY, DATED FEBRUARY 1994. ESCALATION HAS BEEN CALCULATED USING JUNE 1994 RATES.

6. ROUNDING

U.S. DEPARTMENT OF ENERGY - DOE ORDER 5100.4 PAGE I-32 SUBPARAGRAPH (M), REQUIRES ROUNDING OF ALL GENERAL PLANT PROJECTS (GPP'S) AND LINE ITEM (LI) COST ESTIMATES. REFERENCE: DOE 5100.4, FIGURE I-11, DATED 10-31-84.

7. REMARKS

A.) ALL CONSTRUCTION IS ESTIMATED AS BY CPAF. E. & I. IS BY CPAF.
B.) NO DESIGN, PROJECT MANAGEMENT, OR WHC PROJECT MANAGEMENT IS INCLUDED.
C.) ALL EXCAVATED DIRT IS BARRELLED & REPLACED.
D.) NO ESCALATION IS APPLIED TO WBS 33 (WASTE BURIAL CHARGE) AS THE COST PER CUBIC FOOT ($173) COMES FROM THE 5 YEAR PROJECTION.

KAISER ENGINEERS HANFORD
WESTINGHOUSE HANFORD COMPANY
JOB NO. Z198 / ER5511
FILE NO. Z198SFB2

** IEST - INTERACTIVE ESTIMATING **
12" RISER IN S.S. TANKS USING STRADDLE CRANE
STUDY -ADD 12" RISER TO EXISTING SST -100mr VERSION
DOE_R04 - COST CODE ACCOUNT SUMMARY

DATE 07/29/94 09:51:07
BY SMF/ DP

COST CODE/WBS	DESCRIPTION	ESTIMATE SUBTOTAL	ONSITE INDIRECTS	SUB TOTAL	ESCALATION %	ESCALATION TOTAL	SUB TOTAL	CONTINGENCY %	CONTINGENCY TOTAL	TOTAL DOLLARS
000	ENGINEERING									
121001	ENGINEERING/INSPECTION-ONSITE E/C	3540	0	3540	3.16	112	3652	30	1096	4747
TOTAL 000	ENGINEERING	3540	0	3540	3.16	112	3652	30	1096	4747
700	SPECIAL EQUIP/PROCESS SYSTEMS									
310031	CPAF BUILD REUSABLE SUPPORT EQUIP	4765	0	4765	3.57	170	4935	30	1480	6415
310032	CPAF FAB GRNHS HVAC & TK EXHAUSTER	342166	0	342166	3.56	12181	354347	30	106304	460651
310064	CPAF PURCHASE STRADDLE CRANE	1012510	0	1012510	3.56	36045	1048555	30	314567	1363122
310140	SWP AND SAFETY SUPPORT	21454	0	21454	3.56	764	22218	30	6665	28883
310141	CPAF MOVE IN/ SETUP SUPPORT FACIL.	44296	0	44296	3.56	1577	45873	30	13762	59635
310165	CPAF COREDRILL W/ STRADDLE CRANE	23934	0	23934	3.56	853	24787	30	7436	32221
310172	CPAF FAB & INSTALL 12" RISER	13628	0	13628	3.57	486	14114	30	4235	18347
310182	BURNOUT	350915	0	350915	3.56	12493	363408	30	109022	472430
330065	WHC BURIAL CHARGES	6401	0	6401	0.00	0	6401	30	1920	8321
TOTAL 700	SPECIAL EQUIP/PROCESS SYSTEM	1820069	0	1820069	3.55	64569	1884638	30	565391	2450025
PROJECT TOTAL		1,823,609	0	1,823,609	3.55	64,681	1,888,290	30	566,487	2,454,772

KAISER ENGINEERS HANFORD
WESTINGHOUSE HANFORD COMPANY
JOB NO. Z198 / ER5511
FILE NO. Z198SFB2

** IEST - INTERACTIVE ESTIMATING **
12" RISER IN S.S. TANKS USING STRADDLE CRANE
STUDY -ADD 12" RISER TO EXISTING SST -100mr VERSION
DOE_R05 - ESTIMATE SUMMARY BY CSI DIVISION

PAGE 5 OF 7
DATE 07/29/94 09:51:09
BY SMF/ DP

CSI	DESCRIPTION	ESTIMATE SUBTOTAL	ONSITE INDIRECTS	SUB TOTAL	ESCALATION %	ESCALATION TOTAL	SUB TOTAL	CONTINGENCY %	CONTINGENCY TOTAL	TOTAL DOLLARS
ENGINEERING										
00	TECHNICAL SERVICES	3540	0	3540	3.16	112	3652	30	1096	4747
	TOTAL ENGINEERING	3,540	0	3,540	3.16	112	3,652	30	1,096	4,747
CONSTRUCTION										
02	SITEWORK	1463694	0	1463694	3.54	51882	1515576	30	454672	1970245
03	CONCRETE	3737	0	3737	3.56	133	3870	30	1161	5031
15	MECHANICAL	352638	0	352638	3.56	12554	365192	30	109558	474749
	TOTAL CONSTRUCTION	1,820,069	0	1,820,069	3.55	64,569	1,884,638	30	565,391	2,450,025
PROJECT TOTAL		1,823,609	0	1,823,609	3.55	64,681	1,888,290	30	566,487	2,454,772

REFERENCE: ESTIMATE BASIS SHEET — PAGE 3 OF 7
COST CODE ACCOUNT SUMMARY — PAGE 4 OF 7

THE U.S. DEPARTMENT OF ENERGY - RICHLAND ORDER 5700.3 "COST ESTIMATING, ANALYSIS AND STANDARDIZATION" DATED 3-27-85, PROVIDES GUIDELINES FOR ESTIMATE CONTINGENCIES. THE GUIDELINE FOR A STUDY ESTIMATE SHOULD HAVE AN OVERALL RANGE OF 20 TO 30% .

CONTINGENCY IS EVALUATED AT THE THIRD COST CODE LEVEL AND SUMMARIZED AT THE PRIMARY AND SECONDARY COST CODE LEVEL OF THE DETAILED COST ESTIMATE.

000 ENGINEERING

121001	ENGINEERING/INSPECTION-ONSITE E/C	30%	CONTINGENCY WAS ADDED AS INSPECTION WILL HAVE SAME PROBLEMS AS CONSTRUCTION

AVERAGE ENGINEERING CONTINGENCY 30%

700 SPECIAL EQUIP/PROCESS SYSTEMS

310031	CPAF BUILD REUSABLE GREENHOUSE	30%	CONTINGENCY WAS ADDED AS DESIGN OF GREENHOUSE COULD VARY
310032	CPAF FAB GRNHS HVAC & TK EXHAUSTER	30	CONTINGENCY WAS ADDED AS SPECIFICATIONS FOR HVAC EQUIPMENT WILL CHANGE
310064	CPAF PURCHASE STRADDLE CRANE	30	CONTINGENCY WAS ADDED AS PURCHASE PRICE OF CRANE WILL VARY WITH ACTUAL SPEC
310140	SWP AND SAFETY SUPPORT	30	CONTINGENCY WAS ADDED AS EXACT METHOD AND SCOPE OF WORK EXPECTED IS NOT KNOWN
310141	CPAF MOVE IN/ SETUP	30	CONTINGENCY WAS ADDED AS EXACT METHOD AND SCOPE OF WORK EXPECTED IS NOT KNOWN
310165	CPAF COREDRILL W/ STRADDLE CRANE	30	CONTINGENCY WAS ADDED AS EXACT METHOD AND SCOPE OF WORK EXPECTED IS NOT KNOWN
310172	CPAF FAB & INSTALL 12" RISER	30	CONTINGENCY WAS ADDED AS EXACT METHOD AND SCOPE OF WORK EXPECTED IS NOT KNOWN
310182	BURNOUT	30	CONTINGENCY WAS ADDED AS EXACT METHOD AND SCOPE OF WORK EXPECTED IS NOT KNOWN
330065	WHC BURIAL CHARGE	30	CONTINGENCY WAS ADDED AS EXACT METHOD AND SCOPE OF WORK EXPECTED IS NOT KNOWN

TOTAL 700 SPECIAL EQUIP/PROCESS SYSTEM 30

AVERAGE CONSTRUCTION CONTINGENCY 30%

AVERAGE PROJECT CONTINGENCY 30%

KAISER ENGINEERS HANFORD
WESTINGHOUSE HANFORD COMPANY
JOB NO. Z198 / ER5511
FILE NO. Z198SFB2

** IEST - INTERACTIVE ESTIMATING **
12" RISER IN S.S. TANKS USING STRADDLE CRANE
STUDY -ADD 12" RISER TO EXISTING SST -100mr VERSION
DOE_R07 - ONSITE INDIRECT COSTS BY WBS

DATE 07/29/94 09:51:11
BY SMF/ DP

WBS	DESCRIPTION	ESTIMATE SUBTOTAL	CONTRACT %	ADMINISTRATION TOTAL	BID PACK PREP.	OTHER INDIRECTS	TOTAL INDIRECTS
121001	ENGINEERING/INSPECTION-ONSITE E/C	3540	0.00	0	0	0	0
310031	CPAF BUILD REUSABLE SUPPORT EQUIP	4765	0.00	0	0	0	0
310032	CPAF FAB GRNHS HVAC & TK EXHAUSTER	342166	0.00	0	0	0	0
310064	CPAF PURCHASE STRADDLE CRANE	1012510	0.00	0	0	0	0
310140	SWP AND SAFETY SUPPORT	21454	0.00	0	0	0	0
310141	CPAF MOVE IN/ SETUP SUPPORT FACIL.	44296	0.00	0	0	0	0
310165	CPAF COREDRILL W/ STRADDLE CRANE	23934	0.00	0	0	0	0
310172	CPAF FAB & INSTALL 12" RISER	13628	0.00	0	0	0	0
310182	BURNOUT	350915	0.00	0	0	0	0
330065	WHC BURIAL CHARGES	6401	0.00	0	0	0	0
	PROJECT TOTAL	1,823,609		0	0	0	0

KAISER ENGINEERS HANFORD
WESTINGHOUSE HANFORD COMPANY
JOB NO. Z198 / ER5511
FILE NO. Z198SFB2

** IEST - INTERACTIVE ESTIMATING **
12" RISER IN S.S. TANKS USING STRADDLE CRANE
STUDY -ADD 12" RISER TO EXISTING SST -100mr VERSION
DOE_R01 - PROJECT COST SUMMARY

DATE 07/29/94 09:51:02
BY SMF/ DP

COST CODE	DESCRIPTION	ESCALATED TOTAL COST	CONTINGENCY %	CONTINGENCY TOTAL	TOTAL DOLLARS
000	ENGINEERING	4,000	30	1,000	5,000
700	SPECIAL EQUIP/PROCESS SYSTEMS	1,885,000	30	565,000	2,450,000
	PROJECT TOTAL	1,889,000	30	566,000	2,455,000

TYPE OF ESTIMATE STUDY JULY 29, 1994

ARCHITECT ENGINEER G Chadwick Chris H Brevick

OPERATING CONTRACTOR C. DeFigh-Price 8-10-94

REMARKS:

NO DESIGN OR PROJECT MANAGEMENT IS INCLUDED.

(ROUNDED/ADJUSTED TO THE NEAREST " 1,000 / 10,000 " - PERCENTAGES NOT RECALCULATED TO REFLECT ROUNDING)

WBS	DESCRIPTION	ESTIMATE SUBTOTAL	ONSITE INDIRECTS	SUB TOTAL	ESCALATION %	ESCALATION TOTAL	SUB TOTAL	CONTINGENCY %	CONTINGENCY TOTAL	TOTAL DOLLARS
121001	ENGINEERING/INSPECTION-ONSITE E/C	3540	0	3540	3.16	112	3652	30	1096	4747
SUBTOTAL 121	ENGINEERING/INSPECTION-ONSI	3540	0	3540	3.16	112	3652	30	1096	4747
SUBTOTAL 1	ENGINEERING	3540	0	3540	3.16	112	3652	30	1096	4747
310031	CPAF BUILD REUSABLE SUPPORT EQUIP	4765	0	4765	3.57	170	4935	30	1480	6415
310032	CPAF FAB GRNHS HVAC & TK EXHAUSTER	342166	0	342166	3.56	12181	354347	30	106304	460651
310064	CPAF PURCHASE STRADDLE CRANE	1012510	0	1012510	3.56	36045	1048555	30	314567	1363122
SUBTOTAL 3100	CPAF ONE TIME CONSTR - SUBT	1359441	0	1359441	3.56	48396	1407837	30	422351	1830188
310140	SWP AND SAFETY SUPPORT	21454	0	21454	3.56	764	22218	30	6665	28883
310141	CPAF MOVE IN/ SETUP SUPPORT FACIL.	44296	0	44296	3.56	1577	45873	30	13762	59635
310165	CPAF CORDRILL W/ STRADDLE CRANE	23934	0	23934	3.56	853	24787	30	7436	32221
310172	CPAF FAB & INSTALL 12" RISER	13628	0	13628	3.57	486	14114	30	4235	18347
310182	BURNOUT	1860820	0	1860820	3.56	66245	1927065	30	578120	2505185
SUBTOTAL 3101	CPAF COST FOR EACH TANK - S	1964132	0	1964132	3.56	69925	2034057	30	610218	2644271
SUBTOTAL 31	FA CONST-ONSITE E/C	3323573	0	3323573	3.56	118321	3441894	30	1032569	4474459
330065	WHC BURIAL CHARGES	6401	0	6401	0.00	0	6401	30	1920	8321
SUBTOTAL 33	CONSTRUCTION-O/C	6401	0	6401	0.00	0	6401	30	1920	8321
SUBTOTAL 3	CONSTRUCTION	3329974	0	3329974	3.55	118321	3448295	30	1034489	4482780
PROJECT TOTAL		3,333,514	0	3,333,514	3.55	118,433	3,451,947	30	1,035,585	4,487,527

1. DOCUMENTS AND DRAWINGS

DOCUMENTS: ENGINEERING STUDY (ISSUE B, MAY 1994)

DRAWINGS: NONE

2. MATERIAL PRICES

UNIT COSTS REPRESENT CURRENT PRICES FOR SPECIFIED MATERIAL.

3. LABOR RATES

CURRENT KEH BASE CRAFT RATES, AS ISSUED BY KEH FINANCE (EFFECTIVE 10-01-93), INCLUDE FRINGE BENEFITS, LABOR INSURANCE, TAXES AND TRAVEL WHERE APPLICABLE, PER HANFORD SITE STABILIZATION AGREEMENT, APPENDIX A (EFFECTIVE 09-06-93). NON CRAFT HOURLY RATES ARE BASED ON THE 1994 FISCAL YEAR BUDGET LIQUIDATION RATES AS ISSUED BY KEH FINANCE (EFFECTIVE 10-01-93).

4. GENERAL REQUIREMENTS/TECHNICAL SERVICES/OVERHEADS

A.) ONSITE CONSTRUCTION FORCES GENERAL REQUIREMENTS, TECHNICAL SERVICES AND CRAFT OVERHEAD COSTS ARE INCLUDED AS A COMPOSITE PERCENTAGE BASED ON THE KEH ESTIMATING FACTOR/BILLING SCHEDULE, REVISION 16, DATED OCTOBER 01, 1993. THE TOTAL COMPOSITE PERCENTAGE APPLIED TO ONSITE CONSTRUCTION FORCES LABOR, FOR THIS PROJECT, IS 94% FOR SHOP WORK AND 136% FOR FIELD WORK, WHICH IS REFLECTED IN THE "OH&P/B&I" COLUMN OF THE ESTIMATE DETAIL.

B.) ONSITE CONTRACT ADMINISTRATION AND CONSTRUCTION MANAGEMENT COSTS, ASSOCIATED WITH THE OVERALL MANAGEMENT OF THE FIXED PRICE CONTRACTS, ARE INCLUDED AS A COMPOSITE PERCENTAGE AND LUMP SUM ALLOWANCE (FOR BID PACKAGE PREP) BASED ON THE ESTIMATING FACTOR/BILLING SCHEDULE. THE TOTAL COMPOSITE PERCENTAGE AND LUMP SUM ALLOWANCE ARE APPLIED AGAINST THE TOTAL FIXED PRICE CONTRACT AMOUNT WHICH IS REFLECTED ON THE KEH SUMMARY REPORT DOER07, INCLUDED WITH THIS ESTIMATE. (FINAL ESTIMATES MAY BE PARTIALLY MANLOADED AND INCLUDED WITHIN THE ESTIMATE DETAIL)

5. ESCALATION

ESCALATION PERCENTAGES WERE CALCULATED BY THE HANFORD MATERIAL & LABOR ESCALATION STUDY, DATED FEBRUARY 1994. ESCALATION HAS BEEN CALCULATED USING JUNE 1994 RATES.

6. ROUNDING

U.S. DEPARTMENT OF ENERGY - DOE ORDER 5100.4 PAGE I-32 SUBPARAGRAPH (M), REQUIRES ROUNDING OF ALL GENERAL PLANT PROJECTS (GPP'S) AND LINE ITEM (LI) COST ESTIMATES. REFERENCE: DOE 5100.4, FIGURE I-11, DATED 10-31-84.

7. REMARKS

A.) ALL CONSTRUCTION IS ESTIMATED AS BY CPAF. E. & I. IS BY CPAF.
B.) NO DESIGN, PROJECT MANAGEMENT, OR WHC PROJECT MANAGEMENT IS INCLUDED.
C.) ALL EXCAVATED DIRT IS BARRELLED & REPLACED.
D.) NO ESCALATION IS APPLIED TO WBS 33 (WASTE BURIAL CHARGE) AS THE COST PER CUBIC FOOT ($173) COMES FROM THE 5 YEAR PROJECTION.

COST CODE/WBS	DESCRIPTION	ESTIMATE SUBTOTAL	ONSITE INDIRECTS	SUB TOTAL	ESCALATION %	ESCALATION TOTAL	SUB TOTAL	CONTINGENCY %	CONTINGENCY TOTAL	TOTAL DOLLARS
000	ENGINEERING									
121001	ENGINEERING/INSPECTION-ONSITE E/C	3540	0	3540	3.16	112	3652	30	1096	4747
TOTAL 000	ENGINEERING	3540	0	3540	3.16	112	3652	30	1096	4747
700	SPECIAL EQUIP/PROCESS SYSTEMS									
310031	CPAF BUILD REUSABLE SUPPORT EQUIP	4765	0	4765	3.57	170	4935	30	1480	6415
310032	CPAF FAB GRNHS HVAC & TK EXHAUSTER	342166	0	342166	3.56	12181	354347	30	106304	460651
310064	CPAF PURCHASE STRADDLE CRANE	1012510	0	1012510	3.56	36045	1048555	30	314567	1363122
310140	SWP AND SAFETY SUPPORT	21454	0	21454	3.56	764	22218	30	6665	28883
310141	CPAF MOVE IN/ SETUP SUPPORT FACIL.	44296	0	44296	3.56	1577	45873	30	13762	59635
310165	CPAF COREDRILL W/ STRADDLE CRANE	23934	0	23934	3.56	853	24787	30	7436	32221
310172	CPAF FAB & INSTALL 12" RISER	13628	0	13628	3.57	486	14114	30	4235	18347
310182	BURNOUT	1860820	0	1860820	3.56	66245	1927065	30	578120	2505185
330065	WHC BURIAL CHARGES	6401	0	6401	0.00	0	6401	30	1920	8321
TOTAL 700	SPECIAL EQUIP/PROCESS SYSTEM	3329974	0	3329974	3.55	118321	3448295	30	1034489	4482780
PROJECT TOTAL		3,333,514	0	3,333,514	3.55	118,433	3,451,947	30	1,035,585	4,487,527

KAISER ENGINEERS HANFORD
WESTINGHOUSE HANFORD COMPANY
JOB NO. Z198 / ER5511
FILE NO. Z198SFC2

** IEST - INTERACTIVE ESTIMATING **
12" RISER IN S.S. TANKS USING STRADDLE CRANE
STUDY -ADD 12" RISER TO EXISTING SST -500mr VERSION
DOE_R05 - ESTIMATE SUMMARY BY CSI DIVISION

DATE 07/29/94 09:58:41
BY SMF/ DP

CSI	DESCRIPTION	ESTIMATE SUBTOTAL	ONSITE INDIRECTS	SUB TOTAL	ESCALATION %	ESCALATION TOTAL	SUB TOTAL	CONTINGENCY %	CONTINGENCY TOTAL	TOTAL DOLLARS
ENGINEERING										
00	TECHNICAL SERVICES	3540	0	3540	3.16	112	3652	30	1096	4747
TOTAL ENGINEERING			0			112			1,096	
		3,540		3,540	3.16		3,652	30		4,747
CONSTRUCTION										
02	SITEWORK	2973599	0	2973599	3.55	105634	3079233	30	923770	4003000
03	CONCRETE	3737	0	3737	3.56	133	3870	30	1161	5031
15	MECHANICAL	352638	0	352638	3.56	12554	365192	30	109558	474749
TOTAL CONSTRUCTION			0			118,321			1,034,489	
		3,329,974		3,329,974	3.55		3,448,295	30		4,482,780
PROJECT TOTAL			0			118,433			1,035,585	
		3,333,514		3,333,514	3.55		3,451,947	30		4,487,527

REFERENCE: ESTIMATE BASIS SHEET PAGE 3 OF 7
COST CODE ACCOUNT SUMMARY PAGE 4 OF 7

THE U.S. DEPARTMENT OF ENERGY - RICHLAND ORDER 5700.3 "COST ESTIMATING, ANALYSIS AND STANDARDIZATION" DATED 3-27-85, PROVIDES GUIDELINES FOR ESTIMATE CONTINGENCIES. THE GUIDELINE FOR A STUDY ESTIMATE SHOULD HAVE AN OVERALL RANGE OF 20 TO 30% .

CONTINGENCY IS EVALUATED AT THE THIRD COST CODE LEVEL AND SUMMARIZED AT THE PRIMARY AND SECONDARY COST CODE LEVEL OF THE DETAILED COST ESTIMATE.

000 ENGINEERING

121001	ENGINEERING/INSPECTION-ONSITE E/C	30%	CONTINGENCY WAS ADDED AS INSPECTION WILL HAVE SAME PROBLEMS AS CONSTRUCTION

AVERAGE ENGINEERING CONTINGENCY 30%

700 SPECIAL EQUIP/PROCESS SYSTEMS

310031	CPAF BUILD REUSABLE GREENHOUSE	30%	CONTINGENCY WAS ADDED AS DESIGN OF GREENHOUSE COULD VARY
310032	CPAF FAB GRNHS HVAC & TK EXHAUSTER	30	CONTINGENCY WAS ADDED AS SPECIFICATIONS FOR HVAC EQUIPMENT WILL CHANGE
310064	CPAF PURCHASE STRADDLE CRANE	30	CONTINGENCY WAS ADDED AS PURCHASE PRICE OF CRANE WILL VARY WITH ACTUAL SPEC
310140	SWP AND SAFETY SUPPORT	30	CONTINGENCY WAS ADDED AS EXACT METHOD AND SCOPE OF WORK EXPECTED IS NOT KNOWN
310141	CPAF MOVE IN/ SETUP	30	CONTINGENCY WAS ADDED AS EXACT METHOD AND SCOPE OF WORK EXPECTED IS NOT KNOWN
310165	CPAF COREDRILL W/ STRADDLE CRANE	30	CONTINGENCY WAS ADDED AS EXACT METHOD AND SCOPE OF WORK EXPECTED IS NOT KNOWN
310172	CPAF FAB & INSTALL 12" RISER	30	CONTINGENCY WAS ADDED AS EXACT METHOD AND SCOPE OF WORK EXPECTED IS NOT KNOWN
310182	BURNOUT	30	CONTINGENCY WAS ADDED AS EXACT METHOD AND SCOPE OF WORK EXPECTED IS NOT KNOWN
330065	WHC BURIAL CHARGE	30	CONTINGENCY WAS ADDED AS EXACT METHOD AND SCOPE OF WORK EXPECTED IS NOT KNOWN

TOTAL 700 SPECIAL EQUIP/PROCESS SYSTEM 30

AVERAGE CONSTRUCTION CONTINGENCY 30%

AVERAGE PROJECT CONTINGENCY 30%

KAISER ENGINEERS HANFORD
WESTINGHOUSE HANFORD COMPANY
JOB NO. Z198 / ER5511
FILE NO. Z198SFC2

** IEST - INTERACTIVE ESTIMATING **
12" RISER IN S.S. TANKS USING STRADDLE CRANE
STUDY -ADD 12" RISER TO EXISTING SST -500mr VERSION
DOE_R07 - ONSITE INDIRECT COSTS BY WBS

DATE 07/29/94 09:58:43
BY SMF/ DP

WBS	DESCRIPTION	ESTIMATE SUBTOTAL	CONTRACT ADMINISTRATION %	CONTRACT ADMINISTRATION TOTAL	BID PACK PREP.	OTHER INDIRECTS	TOTAL INDIRECTS
121001	ENGINEERING/INSPECTION-ONSITE E/C	3540	0.00	0	0	0	0
310031	CPAF BUILD REUSABLE SUPPORT EQUIP	4765	0.00	0	0	0	0
310032	CPAF FAB GRNHS HVAC & TK EXHAUSTER	342166	0.00	0	0	0	0
310064	CPAF PURCHASE STRADDLE CRANE	1012510	0.00	0	0	0	0
310140	SWP AND SAFETY SUPPORT	21454	0.00	0	0	0	0
310141	CPAF MOVE IN/ SETUP SUPPORT FACIL.	44296	0.00	0	0	0	0
310165	CPAF COREDRILL W/ STRADDLE CRANE	23934	0.00	0	0	0	0
310172	CPAF FAB & INSTALL 12" RISER	13628	0.00	0	0	0	0
310182	BURNOUT	1860820	0.00	0	0	0	0
330065	WHC BURIAL CHARGES	6401	0.00	0	0	0	0
	PROJECT TOTAL	3,333,514		0	0	0	0

APPENDIX B

Photographs

C Tank Farm

T Tank Farm

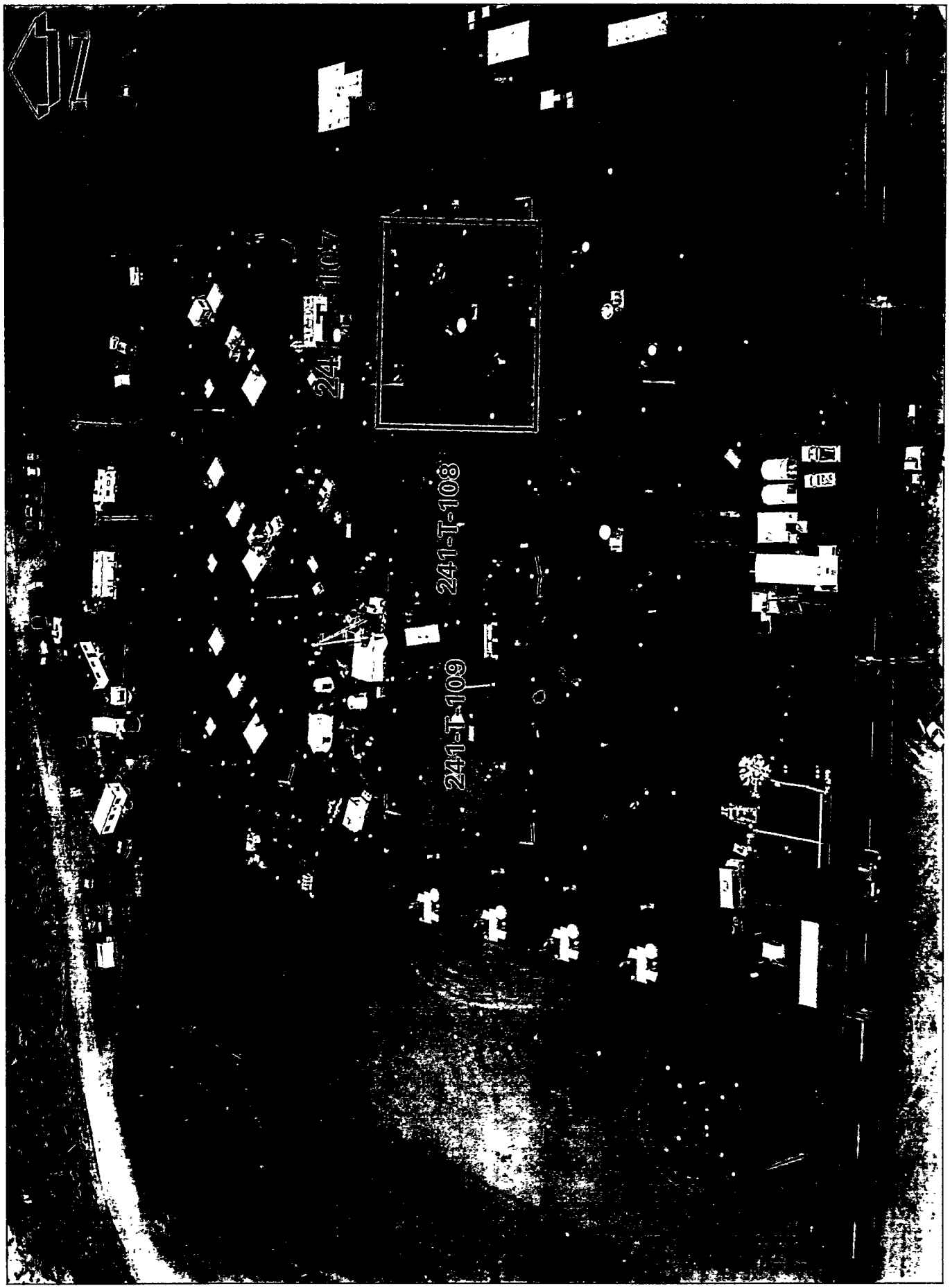

APPENDIX C

Abrasive Water Jet Cutting

Valley Systems

April 12, 1994

KEH Company
P.O. Box 888
1200 Jadwin Avenue
Richland, Washington 99352

Attn: Mr. Imtaz Khan

Dear Mr. Khan:

We at Valley Systems, Inc., appreciate the opportunity to discuss with you our waterjet cutting capabilities.

Valley Systems, Inc., has offered cleaning and cutting services to industry for over twenty years. We maintain fully staffed and equipped branches across the United States. Included in the over 1200 pieces of mobile equipment which we operate, is the world's largest fleet of mobile, ultra-high pressure waterjet cutting systems.

Our ultra-high pressure technology is just one result of the significant investment which Valley Systems has made in resources, equipment, and professional personnel. We hold several patents on waterjet cleaning and cutting equipment and we are the exclusive licensee of other patents. We also manufacture our equipment in our own shops.

Recognizing that cleaning and cutting problems encountered in a nuclear facility are not "off-the-shelf". Valley Systems, Inc., develops a job plan tailored to specific site conditions. Our engineering staff and our in-house machine shops have the ability to quickly design and fabricate special tools to solve virtually any cleaning or cutting problem. We would welcome the opportunity to work with you and your associates to develop tools and techniques which could help facilitate some of the projects in which you are involved.

Valley Systems, Inc.
P.O. BOX 603, CANAL FULTON, OHIO 44614 • PHONE 216-854-4526 • FAX 216- 854-3444

Valley Systems

Page 2
April 12, 1994

Obviously, technology in and of itself has little value if it is not applied in a safe, professional manner. Valley Systems, Inc., places great emphasis on personnel safety and incorporates safety training into every aspect of operations.

Attached to this letter is a brief description of some of the aspects involved in cutting projects at nuclear facilities, updated from our previous submission of October 1992. Also enclosed is our brochure describing our full line of cleaning services.

We wish to thank you again for the interest you have expressed in Valley Systems, Inc., and in the services which it offers and I look forward to working with you in the near future.

Sincerely,
Valley Systems, Inc.

David V. Culp
Manager Contract Administration

DVC/pr

Enclosures

Valley Systems, Inc.
P.O. BOX 603, CANAL FULTON, OHIO 44614 • PHONE 216-854-4526 • FAX 216- 854-3444

Valley Systems

April 12, 1994

CONSIDERATIONS/TYPICAL SCOPE OF SUPPLY:
ULTRA-HIGH PRESSURE WATERJET CUTTING
IN NUCLEAR POWER FACILITIES

I. Scope of Supply (Typical):

A. Valley Systems, Inc.:

1. Valley Systems, Inc., will supply ultra-high pressure operating technicians, ultra-high pressure waterjet cutting equipment, and abrasive materials as required to make the appropriate cuts.

2. To accurately specify material, equipment, personnel, and time requirements, a thorough description of the object to be cut and any special site conditions is necessary. This description should include:

a. The composition and shape of the object to be cut (i.e., Is it manufactured from concrete, steel, etc.? If concrete, what is the size and concentration of re-bar?)

b. The thickness of the object to be cut.

c. The dimensions of the cut.

d. Accessibility (i.e., Is it in a "hot" area? How much clearance exists above the object to be cut, etc.?)

e. The distance of the object to be cut from the nearest safe, truck accessible site.

f. Special requirements for effluent control.

Valley Systems, Inc.
P.O. BOX 603, CANAL FULTON, OHIO 44614 • PHONE 216-854-4526 • FAX 216- 854-3444

Valley Systems

3. a. Typically, about 2.5 gallons of water and about 2 pounds of abrasive are used per minute of cutting. These quantities, in addition to a very small amount of material from the cutting process is completed. It may also be necessary to contain these substances during the cutting operation.

   b. If the waste and effluent generated by the cutting process is not contaminated, Valley Systems will provide vacuum collection equipment to collect materials as they are generated.

   c. If the waste and effluent generated by the cutting process is contaminated, a special vacuum collection unit can be employed. typically, this unit utilizes a "remote" vacuum power unit and a cyclone system. Waste and effluent are collected into drums via the cyclone system. Because of contamination, the entire vacuum collection system would remain on site after the project.

4. If cutting operations are to be conducted in an area to which, for reasons of safety or security, access for Valley personnel is not possible, the following procedure would be followed:

   a. In a non-hazardous area, Valley personnel would set up the cutting head and tracking system and provide the customer's personnel (who would be permitted to enter the hazardous area) with appropriate training in the set up and operation of the cutting unit.

   b. Valley personnel would perform as much set up as possible (e.g., focus tube alignment) in the non-hazardous area.

Valley Systems, Inc.
P.O. BOX 603, CANAL FULTON, OHIO 44614 • PHONE 216-854-4526 • FAX 216- 854-3444

Valley Systems

c. i) The customer's personnel will carry the cutting head and tracking system into the hazardous area and install the system per the instructions of Valley personnel.

ii) A closed circuit television system and a two-way communication system will be utilized to permit Valley personnel to monitor set up and operation.

d. Because of contamination, the cutting head and tracker will remain on site after completion of the cutting project.

B. Customer:

1. The customer will provide RCT training and any other special training requirement for Valley personnel engaged in cutting activities.

2. The customer's personnel will perform all required radiation level monitoring during the course of this project.

3. The customer will provide all utilities (110V electricity, potable water, compressed air).

4. (If required to conform to union contracts, etc.) The customer will provide labor to assist Valley technicians in equipment set up, line rigging, etc.

5. If necessary, the customer will provide decontamination and/or disposal facilities for any Valley equipment utilized in this project.

6. The customer will supply rigging and lifting equipment necessary to remove sections cut from the concrete walls.

Valley Systems, Inc.
P.O. BOX 603, CANAL FULTON, OHIO 44614 • PHONE 216-854-4526 • FAX 216- 854-3444

Valley Systems

7. The customer will provide personnel to perform all activities necessary in hazardous areas.

8. The customer will supply television monitoring and two-way communication equipment.

9. The customer will provide collection and disposal facilities for all waste and effluent generated by the cutting process.

II. Typical Pricing - April 1994

1. Charges for all project will be determined by actual time and material requirements and will be based on the following typical hourly rates:

Ultra-High Pressure Diesel Unit:	$200.00/hr
UHP Safety Gear:	5.00/hr/man
Abrasive Cutting Tool:	130.00/hr
Vacuum Truck:	95.00/hr
Power Drummer (Cyclone):	25.00/hr
Personnel:	Prevailing wage plus required benefits plus 35% overhead plus 20% profit
Travel:	
Equipment Trucks:	1.75/mile
Support Vehicles:	1.25/mile
Per Diem:	75.00/man/day

2. Once Valley's equipment and personnel are deployed on site, any delay not attributable to Valley Systems, Inc., will be invoiced at the hourly rates listed above.

3. Proprietary equipment, developed by Valley Systems, Inc., for its own use will be utilized. Should contamination prevent the removal of equipment from the job site:

Valley Systems, Inc.
P.O. BOX 603, CANAL FULTON, OHIO 44614 • PHONE 216-854-4526 • FAX 216- 854-3444

Valley Systems

Page 5
April 12, 1994

a. The customer will agree to protect the confidentiality of equipment and processes employed by Valley Systems, Inc.

b. Should the extent of the contamination preclude any further use of equipment, an invoice for the fair market value of the equipment will be issued to the customer.

c. A confidentiality agreement will be executed prior to the start of the project.

John A. Cihon
Manager - Technical Services

JAC/pr

Valley Systems, Inc.
P.O. BOX 603, CANAL FULTON, OHIO 44614 • PHONE 216-854-4526 • FAX 216- 854-3444

Cold Cutting

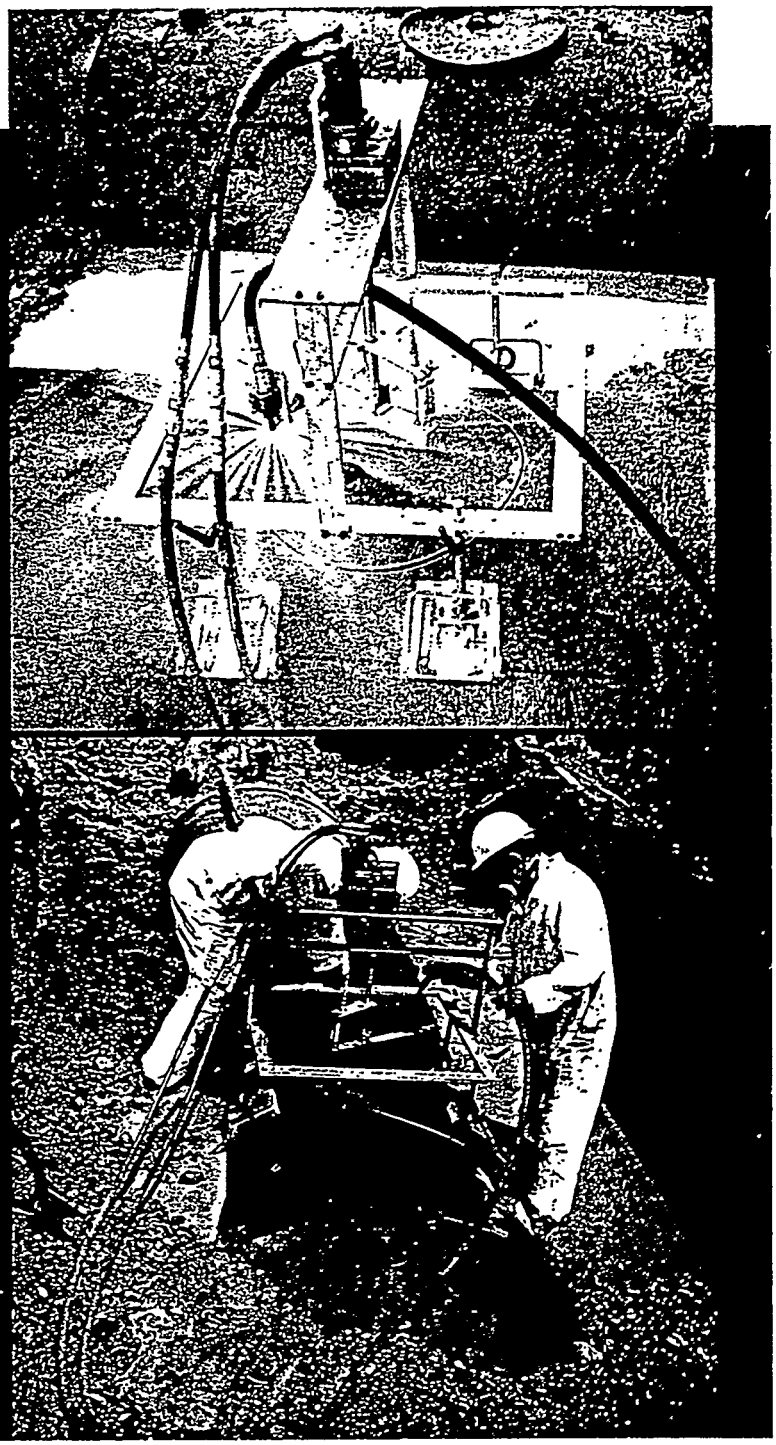

Through an aggressive and continuous program of process and equipment research and development, **Valley Systems, Inc.** has established its leadership in the use of ultra high pressure technology for industrial cutting applications.

The inherent characteristics of the UHP cutting process, coupled with Valley's innovations, have provided industry with a safe and cost-effective alternative to conventional mechanical or oxy-acetylene torch or gas flame cutting methods.

Cutting action is produced by particles of abrasive introduced into the high-energy UHP water stream. Abrasive particles introduced into this stream are accelerated to supersonic velocities. When these abrasive particles impact the workpiece, they shear and dislodge tiny fragments of material. These particles of material, and the water stream itself, carry away any heat evolved during cutting.

As a result, for most UHP cutting applications, the need for hot work permits is eliminated. In addition, no dust or fumes are evolved, and there is no heat-induced damage to the material being cut. For cutting projects in refineries, or in other areas where the heat and sparks of conventional cutting methods could pose significant safety hazards, UHP cutting is unsurpassed.

Valley Systems

BOX 603
CANAL FULTON, OHIO 44614
216/854-4526

AMERICA'S PROVEN LEADER OF INDUSTRIAL CLEANING TECHNOLOGY

QUEST
INTEGRATED, INC.

formerly Flow Research, Inc.

VIA FEDERAL EXPRESS

April 11, 1994
94TD0757

Mr. Imtiaz Kahn
K.E.H. Company
P.O. Box 888
1200 Jadwin Avenue
Mailstop E6-26
Richland, Washington 99352

Dear Mr. Kahn:

I have enclosed a number of brochures and documents for your review. Of particular importance to the problem that you described is the paper by Hashish and Echert on abrasive-waterjet deep kerfing and surface cleaning. This includes simple schematics of the appropriate tools on pages 273 and 274. A modification of the deep kerf tool could be made to cut the holes you described. This could be positioned and operated remotely to protect workers.

As we discussed, QUEST is experienced at high-pressure waterjet and abrasive jet tool design, fabrication, testing, and field support for the nuclear industry. We have been involved in a number of cleaning and cutting operations during nuclear plant outages over the last several years. These were supported by trained field engineers and technicians. This experience has refined our understanding of designing for nuclear applications.

Please call me if you have any additional questions.

Sincerely,

Steve Knowles
Program Manager
Technology Division

SK:cr/94TD0757.W4W

Enclosures

21414 - 68th Avenue South
Kent, Washington 98032
Phone: (206) 872-9500
FAX: (206) 872-8967

QUEST INTEGRATED, INC. formerly Flow Research, Inc.

QUEST INTEGRATED, INC.

Technology Division

QUEST Integrated, Inc., is a high-technology firm that specializes in contract research and development for a broad spectrum of sponsors in both government and private industry. QUEST was originally founded in 1971, and, until recently, was known as Flow Research, Inc. QUEST has fully integrated capabilities in applied research, product development, special systems development, and support of delivered hardware. The company also serves as the technological base for a group of corporations founded on QUEST leadership in the fields of ultrahigh-pressure waterjet technology, abrasive-waterjet applications, and advanced excavation systems.

Through the Technology Division (TD), QUEST maintains its leadership position in the development of ultrahigh-pressure waterjet technology. This technology has found a wide range of applications. Currently, QUEST is actively engaged in:

- Abrasive-Waterjet/Waterjet Machining Technology
- Nuclear Decontamination and Decommissioning
- Advanced Excavation and Drilling Technology

The scope of expertise and services ranges from basic research in abrasive-waterjet/waterjet technology to proof-of-concept and feasibility studies, and to the development and fabrication of turnkey systems, including service and field support.

Abrasive-Waterjet/Waterjet Machining Technology

QUEST has been the leader in the development of abrasive-waterjet/waterjet (AWJ/WJ) technology since 1971. QUEST has lead the industry in innovative developments including the introduction, ten years ago, of abrasives into the waterjet to form the abrasive-waterjet. This innovation was patented and is the basis for many recent and new applications of waterjet technology.

QUEST has now demonstrated the first generation of AWJ machining technology. Demonstrations include turning, milling, cutting, and drilling complex shapes and parts made of conventional metals, advanced composites, rock, glass, and concrete. Applications range from precision drilling of composites for the Advanced Tactical Fighter, to finely milled isogrid structures for missles, to exotic materials for large support structures for spacecraft.

Today QUEST is actively extending AWJ/WJ technology under contract to the National Center for Manufacturing Sciences (NCMS). For NCMS and its affiliates, QUEST is developing and demonstrating the next generation, automated AWJ/WJ system aimed at improving the U.S. competitive position in manufacturing.

Nuclear Decontamination and Decommissioning

QUEST has been applying the AWJ/WJ technology to nuclear applications since the early 1980s. The work has been centered around development of special tools for cleaning and cutting. The initial work

21414 - 68th Avenue South
Kent, Washington 98032
Phone: (206) 872-9500
FAX: (206) 872-8967

successfully demonstrated cleaning of contaminated concrete surfaces. This was done by removing a controlled thickness of material and containing the spoils. Under contract with the Department of Energy, QUEST developed tools that can be used for decontamination of surfaces (Cleaner/Scarifier™ System) and for cutting large concrete structures (Deep Kerf™ System). These systems have been used in a demonstration at the West Valley Project.

Due to the unique requirements of the nuclear industry, most decontamination and decommissioning (D&D) operations require customized systems utilizing either waterjets or abrasive-waterjets. Under contract to a major nuclear vendor, QUEST has built special systems for D&D at a reactor facility. These systems were used to handle, cut and decontaminate reactor system components and related facilities. Cutting is done using a specially developed AWJ system, and decontamination is accomplished using a specially designed waterjet cleaning system.

Advanced Excavation and Drilling Technology

Over the years, QUEST has developed a state-of-the-art capability in the area of ultrahigh-pressure (UHP) technology. This capability has been utilized to develop high-pressure, deep, directional drilling tools for use in the exploration of oil and gas and for rock fracturing applications. For example, QUEST has developed and fielded a borehole mining system for the mining of uranium sands, oil sands, and other mineral deposits.

QUEST initiated the development of devices capable of replacing underground utilities by drilling fluid-assisted horizontal holes. The result was the development of a trenchless (underground drilling) technology and the formation of a commercial company (FlowMole) to provide services to the utility industry. FlowMole is presently a leader in providing trenchless services to the utility industry. QUEST has expanded this technology to UHP-assisted drilling for deep directional drilling of gas and oil.

QUEST has developed a UHP hydraulic explosive (HYDREX) pulse generator. The HYDREX tool provides a means for generating a continuous high-pressure pulse with the versatility of chemical explosives but without the associated delays and hazards.

TECHNOLOGY DIVISION FACILITIES

Quest Integrated, Inc., QUEST is located in Kent, Washington, which is near Seattle and just 10 minutes travel time from the Seattle-Tacoma International Airport. QUEST has excellent laboratory, computer, and manufacturing facilities to conduct a wide variety of research activities. The main facilities are discussed below.

TD provides specialized engineering design and development services in the areas of high-pressure technology, liquid-jet and abrasive-waterjet cutting, and advanced mining and excavation systems. This division has built many special waterjet and AWJ systems for a wide range of sponsors, including clients in the aerospace, nuclear, construction, and mining industries.

QUEST, through TD, has been the most active organization in the world with successful breakthroughs in developing new uses for AWJs. The first successful attempts at using AWJs for cutting, milling, turning, and drilling small precise holes were made by TD, and research and development programs are ongoing for a milling system, a lathe, and a drilling process using AWJ technology. The company has combined its position as a leader in high-pressure technology with its expertise in waterjet and AWJ systems to be at the leading edge of AWJ technology.

Waterjet Technology Laboratory

This laboratory is equipped for performing jet cutting experiments involving fluid pressures up to 400 MPa (60,000 psi). Four ultrahigh-pressure intensifier pumps are dedicated to research and development activities. These pumps cover a very wide range of parameters for testing. The lab is equipped with three nozzle-wear test stands with support measuring equipment and includes a computer controlled traverse system for conducting precise jet cutting tests with speeds up to 4.5 m/min (175 in./min). All necessary abrasive-handling equipment is also available in this lab, including a batch pumping system for up to 55 ksi that is used for testing. Additionally, QUEST has integrated a high-pressure AWJ cutting system with an optical tracing X-Y traverse system for research purposes. The cutting speed is adjustable over a range of 1 to 100 cm/min (0.5 to 40 in./min), and the working range of the machine is 1.2 by 2.4 m (4 by 8 ft). A basic lab prototype lathe is also available for simple AWJ turning tests. The lab has sufficient floor space to assemble and test waterjet and AWJ systems and equipment.

Advanced Machining Center

The advanced machining center is dedicated to R&D efforts in AWJ technology. The center is equipped with a five-axis Adept 1 robot that is used for AWJ nozzle manipulation. The robot is equipped with a vision system for tool tip coordinate identification and also for part inspection. QUEST also has a UNIMATE 6000 three-axis Cartesian coordinate and two-axis revolute wrist industrial robot. This robot is uniquely suited for research and development of high-speed precision manufacturing operations. It has a working envelope of 3x1.2x0.9 m (10x4x3 ft), is capable of traversing at velocities up to 50 cm/s (1200 in./min) per axis, has a repeatability of % 0.127 mm (0.005 inch), and has an accuracy of 0.4 mm/m (0.005 in./ft). The payload of this robot is over 90 kg (200 lb). It is integrated with our high-pressure jet cutting equipment and is used for advanced research applications as well as the production of parts for feasibility investigations. This robotic center is also equipped with microcomputers and data acquisition systems. Recently, two advanced computer-controlled pumps have been added to the lab to enable advanced research activities requiring accurate parameter manipulation.

CADD/CAE System

QUEST has implemented computer-aided engineering and computer-aided design and drafting tools to aid in the automation of the engineering process. The system consists of PC-based workstations utilizing AutoCAD and is used for all engineering drawings and design work.

Machine Shop

QUEST maintains a machine shop dedicated to contract R&D programs. This shop utilizes a full range of modern equipment for turning, milling, surface grinding, honing, welding, and heat treatment of basic metals and advanced alloys. Specialized microlathe and milling equipment is also available for instrument work. Shop personnel average 20 years of experience in precision fabrication of one-of-a-kind scientific equipment and limited-production items. In addition, the machine shop incorporates a fully equipped quality control department for stringent testing of all components, subassemblies, and systems manufactured.

Quality Control Center

The manufacturing center is equipped with the precision measuring and quality control facilities necessary for fabricating high-quality hydraulic components to extremely close tolerances. Manufacturing personnel are experienced both in fabricating precision components and in assembling complete, large systems.

msword/infotd.doc/11-90

QUEST
INTEGRATED, INC.
formerly Flow Research, Inc.

VIA FEDERAL EXPRESS

April 11, 1994
94TD0757

Mr. Imtiaz Kahn
K.E.H. Company
P.O. Box 888
1200 Jadwin Avenue
Mailstop E6-26
Richland, Washington 99352

Dear Mr. Kahn:

I have enclosed a number of brochures and documents for your review. Of particular importance to the problem that you described is the paper by Hashish and Echert on abrasive-waterjet deep kerfing and surface cleaning. This includes simple schematics of the appropriate tools on pages 273 and 274. A modification of the deep kerf tool could be made to cut the holes you described. This could be positioned and operated remotely to protect workers.

As we discussed, QUEST is experienced at high-pressure waterjet and abrasive jet tool design, fabrication, testing, and field support for the nuclear industry. We have been involved in a number of cleaning and cutting operations during nuclear plant outages over the last several years. These were supported by trained field engineers and technicians. This experience has refined our understanding of designing for nuclear applications.

Please call me if you have any additional questions.

Sincerely,

Steve Knowles
Program Manager
Technology Division

SK:cr/94TD0757.W4W

Enclosures

21414 - 68th Avenue South
Kent, Washington 98032
Phone: (206) 872-9500
FAX: (206) 872-8967

DEEP KERF™ SYSTEM

Abrasive-Waterjet Tool for Cutting Thick Concrete

Quest Integrated, Inc., has adapted its existing abrasive-waterjet system to cutting very thick concrete structures. The basis of this innovative system is a rotary Deep Kerf™ tool that makes a slot in the concrete approximately one inch wide. The tool is inserted deeper into the slot as the concrete is cut. Steel reinforcing bars in the concrete are cut along with the concrete. A spoils recovery system can be incorporated to contain and remove the water, concrete particles, and spent abrasives for proper disposal.

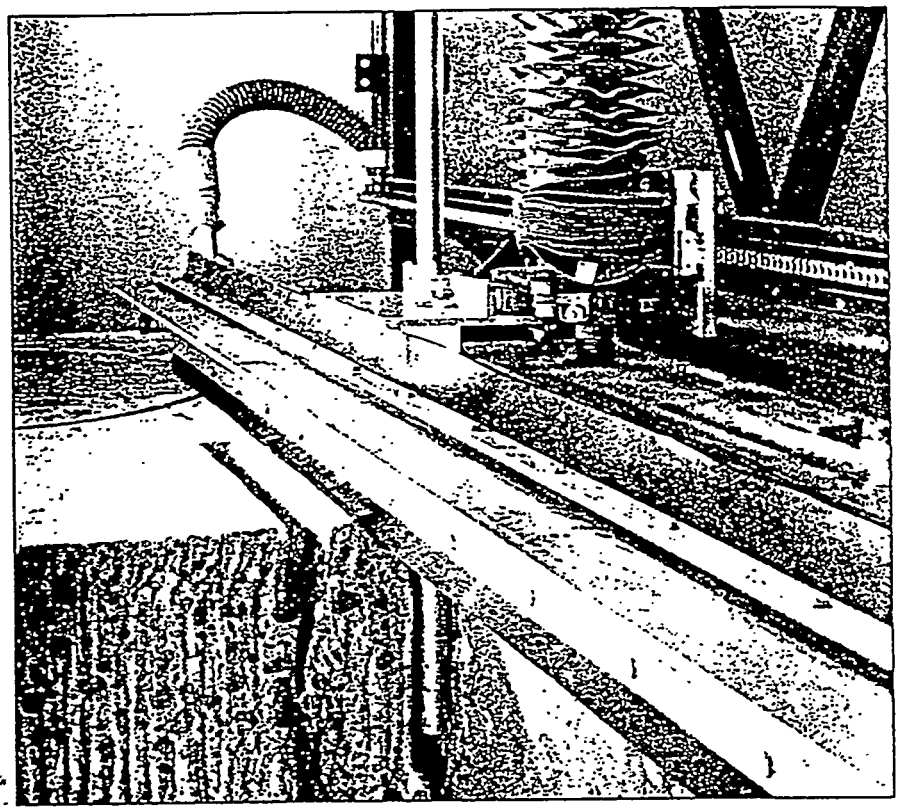

FEATURES

- Can cut through concrete or rock more than 6 feet thick from one side.
- Does not generate dust.
- Computer controlled for hands-off operation plus manual pendant control.
- Modular track sections for variable slot length.

APPLICATIONS

Decommissioning of Nuclear Facilities

The Deep Kerf™ System is designed for the removal of massive concrete structures that are contaminated with radioactive materials. Existing methods of cutting thick concrete are either inefficient or environmentally unsound for bulk concrete removal. The Deep Kerf™ System was developed for the U.S. Department of Energy to meet this need.

Other Applications

- Modification of existing concrete structures.
- Demolition of concrete structures where explosives are unsafe or inappropriate.
- Excavations in hard rock.
- Selective mining.

SPECIFICATIONS

Performance

Cutting rate:	Up to 8 ft^2/hr
Spoils recovery:	Greater than 99%

Inputs

Water pressure:	35,000-55,000 psi
Water flow rate:	3 to 6 gpm
Abrasive consumption:	2 to 6 lb/min

Electrical

Power:	120 VAC, 20 amp circuit
Motors:	DC with encoders
Computer:	IBM PC compatible

Physical

Framework height:	84 in. (approx)
Track sections:	1, 2, 3, 5 and 6 ft
Weight (heaviest component):	175 lb

QUEST INTEGRATED, INC.

Technology Division, 21414 - 68th Avenue South, Kent, WA 98032 – (206) 872-6500

© 1990 Quest Integrated, Inc. All rights reserved. Printed in the U.S.A.

Log No. 94-1044

TELECOPY COVER SHEET

QUEST Integrated, Inc.
21414 68th Avenue South
Kent, Washington 98032
Fax No.: (206) 872-0690

To: Imtiaz Kahn Fax No.: 509-376-9399

Company: K.E.H. Company

Date: April 13, 1994 Time: 8:30

From: William J. Coleman/Steve Knowles

Total number of pages, including this cover sheet: 4

If you do not receive all pages, please call Christa Ramey at (206) 872-9500.

QII-102/08-92

Comments:

QUEST INTEGRATED, INC.

formerly Flow Research, Inc.

VIA FACSIMILE 509-376-9399

April 12, 1994
94TD0761

Mr. Imtiaz Kahn
K.E.H. Company
P.O. Box 888
1200 Jadwin Avenue
Mailstop E6-26
Richland, Washington 99352

Dear Mr. Kahn:

Enclosed is a schematic showing the elements of a system which would allow placing the holes you have described to Steve Knowles into a tank roof. A 3- to 4-foot-diameter pipe would be placed over the desired hole location through excavation. This would create a working region for the tooling. The rotating cutting head would be mounted on a mechanism which would position the cutting head over the tank wall. This mechanism might be a self-propelled crawler, or it could be lowered from the pipe lip to the tank surface. The entire mechanism could be installed in and removed from the pipe using a crane to protect workers. Once in place, the cutting head would fix itself to the tank wall. The cutting operation itself would take about 20 to 30 minutes. If necessary, equipment could be added which held onto the plug and prevented it from dropping into the vessel. It is assumed that the introduction of the abrasive and the water from the cutting head into the tank is allowed. Other system elements include a controller, an abrasive metering hopper, and a UHP pump.

A budgetary estimate for the development and demonstration of this tooling has been prepared. The effort considered includes prototype tool design/fabrication and functional testing using a simulated buried tank wall. The prototype tool would then be updated for field use following the functional testing. At this point, more information is needed before a budgetary estimate for a design update and actual field operation of the tool can be prepared. QUEST would be glad to provide this once the scope and requirements are more clearly defined. The budgetary estimate for a functional demonstration is summarized in the following table:

21414 - 68th Avenue South
Kent, Washington 98032
Phone: (206) 872-9500
FAX: (206) 872-8967

Mr. Imtiaz Kahn
April 12, 1994
Page Two

BUDGETARY ESTIMATE: TANK WALL ABRASIVE-WATERJET CUTTING TOOL DEVELOPMENT

TASK DESCRIPTION	BUDGETARY ESTIMATE ($000)
Prototype tool development/fabrication	$75
Functional testing (at Richland)	$50
TOTAL BUDGETARY ESTIMATE:	$125

This assumes that the pump unit is leased during the functional demonstration.

QUEST has the capability to both develop and implement this tool using its experienced UHP field engineers and technicians. We look forward to further discussions with you regarding the use of this technology for your application. Please contact Steve Knowles at (206) 872-9500 if you have further questions.

Sincerely,

William J. Coleman
Vice President
Manager, Technology Division

SK:cr.94TD0761.W4W

Enclosure

cc: Steve Knowles
Contract Administration

TANK WALL ABRASIVE WATERJET HOLE CUTTING SYSTEM CONCEPT

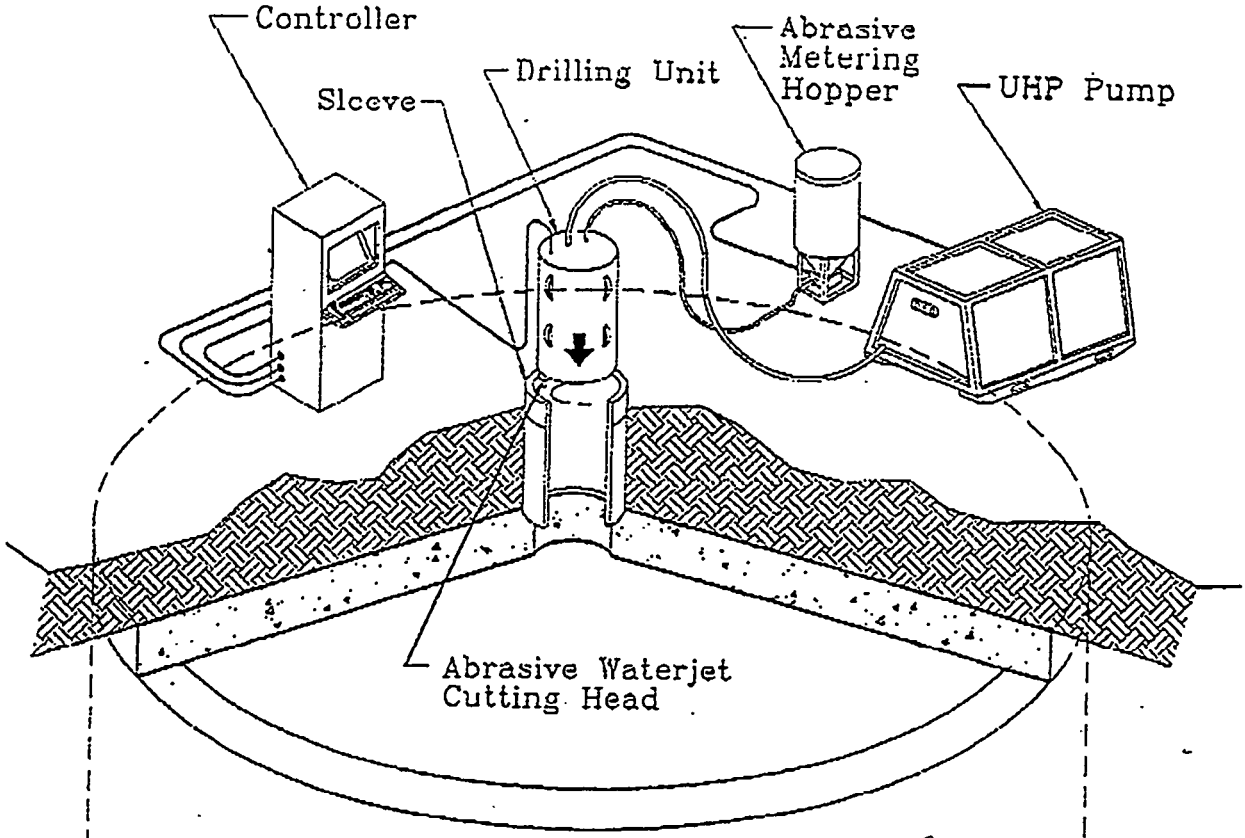

QUEST INTEGRATED, INC.
21414 68th AVE. SO. KENT WA 98032

GD8622

FLOW INTERNATIONAL CORPORATION

April 12, 1994

Mr. Imtiaz Khan, MS-E6-26
Kaiser Engineers, Hanford
1200 Jadwine Avenue
P.O. Box 888
Richland, WA 99352

Dear Mr. Khan,

In response to our phone conversation I have compiled the enclosed literature which describes the recommended equipment used for abrasive waterjet concrete cutting:

S-200 Husky Pump	Diesel powered ultrahigh-pressure pump suitable for the described application.
450CA Field Paser	Abrasive nozzle delivery system which attaches to the Husky pump via a high pressure hose.

In addition, a tracking system designed to move the nozzle through the cutting path of the circle you wish to cut. These tools are usually 12 Volt tracking systems designed specifically for individual applications.

For budgetary purposes, the total cost of a system as described is approximately $150,000.00

Please let me know if I can be of any further help.

Sincerely,
FLOW INTERNATIONAL CORPORATION

Jim White
Sales Manager

JW:pb

Enclosures

23500 64th Avenue South
Kent, Washington 98032
Phone: 206/850-3500
Fax: 206/813-3311

FLOW INTERNATIONAL CORPORATION

Technical Data: **Field Cutting Systems**

FLOW's Field PASER cuts metal and other hard materials with virtually no heat. Systems can be designed for even your toughest mobile cutting jobs.

Field PASER Portable Abrasivejet Cutting System

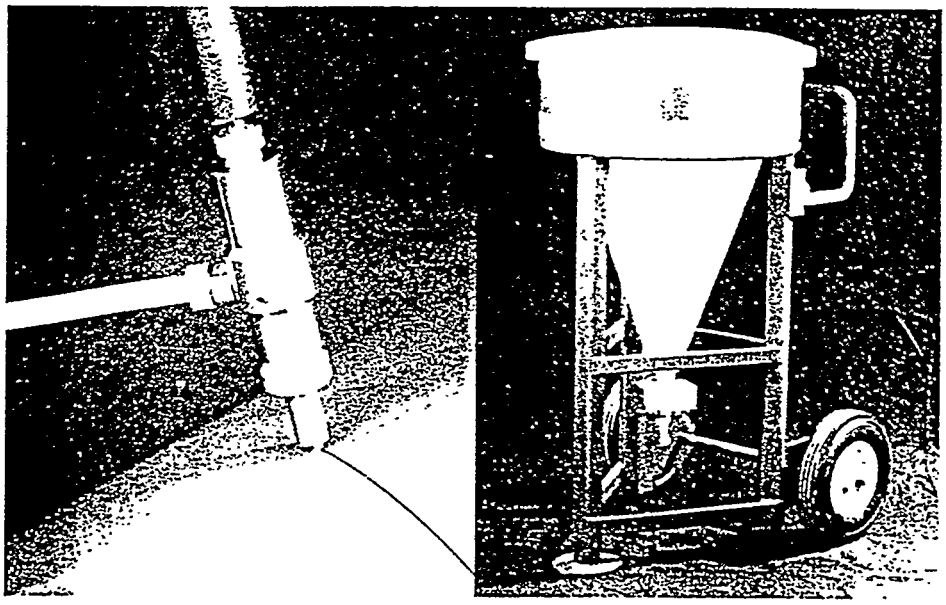

Flow International Corporation (FLOW) is the world leader in ultrahigh-pressure waterjet and abrasivejet technology for industrial cutting and cleaning. That leadership continues with the Field PASER, which brings unmatched product experience to portable cutting applications.

Above: Field PASER cuts a section of half-inch thick schedule 60 pipe. Abrasive is supplied from a portable hopper which incorporates a simple but accurate metering valve.

Proven Factory-Cutting Technology for the Field

FLOW's Field *PASER™* uses ultra-high-pressure water and garnet abrasive to cut through virtually any hard material without producing the usual heat associated with torches. This versatile tool slices through many materials which cannot be economically cut by other means.

Built on many years of high-production, high-tolerance factory-based cutting experience, the Field *PASER* assures you the efficiency and reliability for your toughest mobile cutting jobs.

Flexible Design

The Field *PASER's* pre-aligned cartridge-style cutting head gives you total flexibility. Since the waterjet orifice and the carbide mixing tube are pre-aligned, no additional adjustment is necessary. Simply attach the cutting head to any standard or custom tracking device, activate the abrasive flow and you are ready to cut.

In the event that either the waterjet orifice or the carbide mixing tube should require replacement in the field, the pre-aligned cartridge is fully serviceable. You may replace either of these components without sacrificing the entire cartridge assembly.

Interchangeable orifices allow the operator to easily adjust the flow rates in the field to meet each job's requirements. For thinner materials, low volumes of water and abrasive may be desirable. For thicker materials and for faster cutting rates, a large-volume nozzle combination can be used.

The Technology

The Field *PASER* uses a single sapphire orifice which focuses a high-energy stream of water through the center of a mixing chamber. Abrasive particles are pulled into the mixing chamber and entrained into the waterjet stream where the particles become accelerated to very high velocities. Traveling at speeds of

(Continued on back page)

several times the speed of sound, the abrasive waterjet becomes a powerful, supersonic cutting tool.

The new Field *PASER* is the first mobile abrasivejet cutting system that allows you to efficiently use the full flow and pressure ratings of *FLOW's HUSKY™* pump (patent pending) — 6.5 gallons per minute (30 lpm) at pressures up to 40,000 psi (3,000 bar).

Applications

Abrasive waterjets are routinely used in sensitive environments where a cold cutting method is required. *FLOW* abrasivejet systems are currently at work decommissioning oil and gasoline storage tanks, obsolete rockets and munitions as well as nuclear reactor components. *FLOW's* Field *PASER* is also used for cutting access doors in a variety of structures.

The Field *PASER* system is omnidirectional with the ability to cut straight lines or contours in hard materials such as steel, reinforced concrete, composite structures, stone, and numerous other materials.

FLOW also offers optional items such as garnet abrasive, as well as various orifice and mixing tube sizes to suit your application.

Field *PASER* Features

- ❒ Compact design
- ❒ Operator-friendly
- ❒ Simple and universal – can be used on virtually any tracking device
- ❒ Pre-aligned cartridge requiring no adjustments
- ❒ Reduced setup time means more production time
- ❒ Quick-change cartridge design for minimum downtime
- ❒ Can be rebuilt in the field with simple tools that are provided
- ❒ Higher overall cutting efficiency

Field *PASER*
Model 450CA

System includes:

1. Abrasivejet nozzle (with mounting bracket)
2. Metering valve
3. Hopper assembly
4. Abrasive feed line
5. Carbide mixing tube installation tools (not shown)

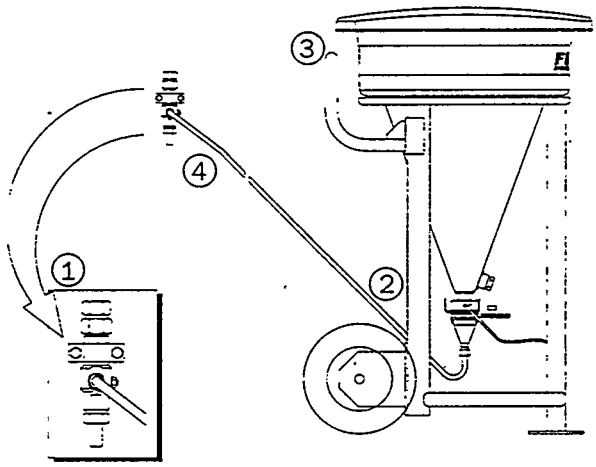

FUNCTIONAL SPECIFICATIONS

Pumped media	Water
Maximum water flow rate	6.5 gpm (30 lpm)
Maximum operating pressure	40,000 psi (3,000 bar)
Thrust	5 to 74 pounds (depending on actual flow & pressure)

PHYSICAL SPECIFICATIONS

Standard nozzle length	8 inches
Hopper assembly (lid closed)	46.3 inches
Hopper assembly (lid open)	70 inches
Weight (empty)	140 pounds
Weight (fully loaded with garnet)	470 pounds
Abrasive feed line (length)	25 feet

Flow International Corporation
is the world leader in ultrahigh-pressure waterjet and abrasivejet technology for industrial cutting and cleaning.

North and South America, Australia and Japan

Flow International Corporation
23500 - 64th Avenue South
P.O. Box 97040
Kent, Washington 98064-9740 USA
Telephone: (206) 850-3500
Fax: (206) 813-3285
TOLL-FREE: (800) 446-3569

Europe, Middle East and Africa

Flow Europe GmbH
Daimlerweg 6, D-6100
Darmstadt, Germany
Telephone: 011-49-6151-88030
Fax: 011-49-6151-893822

Asia

Flow Asia
No. 2 Technology 3rd Road
Science-Based Industrial Park
Hsin Chu, Taiwan ROC
Telephone: 011-886-35-772102
Fax: 011-886-35-773070

Regional Sales Representatives
are located throughout the United States. Call for the representative nearest you.

International Distributors and Agents

Argentina	Japan
Australia	Korea
Brazil	Mexico
Belgium	New Zealand
Canada	People's Republic of China
Czechoslovakia	Singapore
France	South America
Great Britain	Spain
Hong Kong	Sweden
India	Switzerland
Indonesia	Taiwan
Italy	

FLOW INTERNATIONAL CORPORATION

FIC-S4003 4-93 Printed in U.S.A.
© 1993 Flow International Corporation

FLOW INTERNATIONAL CORPORATION

Technical Data: **Pumps**

Incorporating power and efficiency in a 40,000 psi triplex pump. FLOW's direct-drive HUSKY is tough, durable and environmentally safe.

HUSKY
Model S-200
40,000 psi Ultrahigh-Pressure Pump

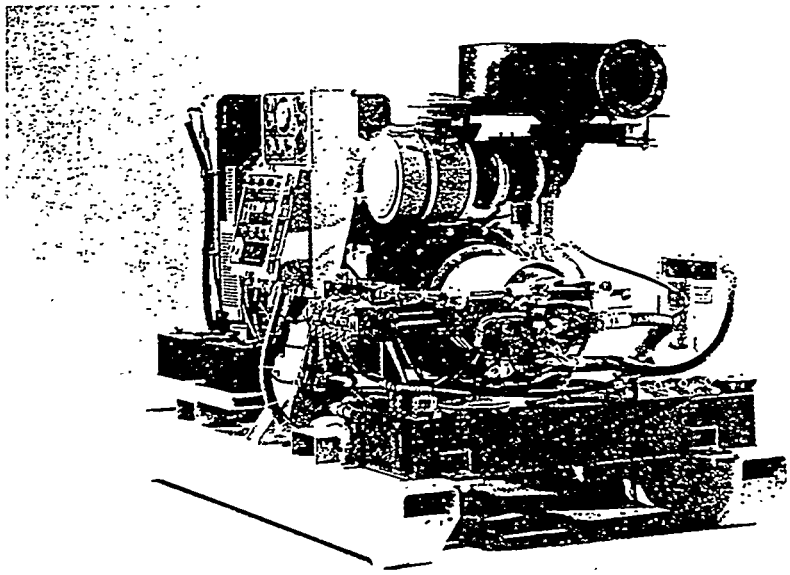

Introducing the HUSKY triplex pump... *the new industry standard for portable or stationary ultrahigh-pressure waterjet cleaning and cutting. Built for demanding industrial applications, the HUSKY is directly driven by a powerful 205 hp* ***Caterpillar*** *diesel engine that delivers ultrahigh-pressure water up to 40,000 psi (2,720 bar). The environmentally friendly design of the HUSKY'S cooling system eliminates wasted water. Its unique combination of power and efficiency makes the HUSKY ideal for most applications – from hand-held industrial cleaning jobs to tough field cutting requirements to high-flow single-tool robotic applications.*

Standard Features

- ❒ Full pressure-compensation
- ❒ 205 horsepower Caterpillar Model 3306DIT engine
- ❒ Sensor lights and automatic shutdown for low inlet water pressure, high engine or pump temperature, low engine or pump oil pressure
- ❒ Closed-loop oil lubrication system for pump cooling
- ❒ Three high-pressure water outlets
- ❒ Inlet water booster pump with water filtration to 5 micron
- ❒ Hydraulic power takeoff with three hydraulic power ports, allowing operation of one, two or three hydraulically powered tools
- ❒ Automatic high-pressure bleed-down valve instantly relieves pressure from system at shutdown
- ❒ Rugged steel frame
- ❒ 100-gallon (379-l) fuel tank

Optional Features

- ❒ Deluxe security covers
- ❒ Tandem-axle trailer-mounted version
- ❒ 12 cubic feet per minute (cfm) gear-driven air compressor
- ❒ 1 micron water-filtration elements
- ❒ Sound-abatement package

***FLOW* Quality**

The Model S-200 is a direct-drive plunger pump capable of a continuous operating pressure of 40,000 psi (2,720 bar) at flow rates up to 6.5 gpm (24 lpm). Powered by a 205 hp diesel engine, this heavy-duty high-pressure pump is designed for rugged industrial field applications where dependability, efficiency and economy of operation are all critical factors to success. The *HUSKY* is backed by millions of hours of round-the-clock performance logged on *FLOW* pumps worldwide.

The S-200 pump features high reliability, easy maintenance, a compact design and simple operation.

(Continued on back)

Specifications

Pumped Fluid ..... Water

High-Pressure Pump

Type ..... Triplex
Drive type ..... Direct
Pressure compensation ..... Full
Cooling system ..... Liquid (closed loop)

Maximum Continuous Operation

Design pressure ..... 40,000 psi (2,720 bar)
Output flow rate ..... 6.5 gpm @ 2,100 rpm (24 lpm)

Hydraulic Power Take-Off (PTO)

Output flow rate ..... 9 gpm (34 lpm)
Number of hand tool ports 3

Water Filtration Provided ..... 5 micron

Weight (without fuel tank) ..... 6,100 pounds (2,767 kg)

Mounting Type ..... Skid

Engine:

Manufacturer ..... Caterpillar
Horsepower ..... 205** (continuous duty)
Cooling ..... Water (closed loop)
Engine type ..... 6-cylinder, turbo-charged 4-cycle direct-injected
Speed ..... 2,100 rpm (continuous duty)

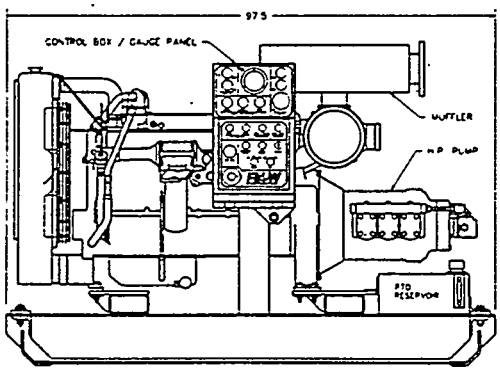

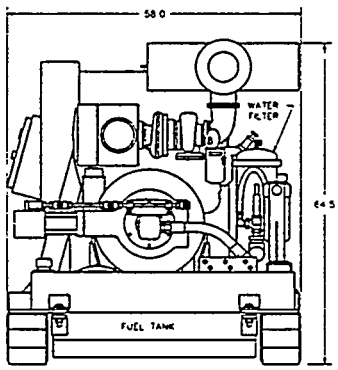

* Water to be filtered and pH-adjusted for best performance: if medium other than water is used, contact Flow International Corporation

** Horsepower is rated from sea level to 4,000 ft (1,219 m) above sea level; for applications at higher elevations or temperatures > 110° F (43° C), contact Flow International Corporation

© 1992 Flow International Corporation

Flow International Corporation is the world leader in ultrahigh-pressure waterjet and abrasivejet technology for industrial cutting and cleaning.

North and South America, Australia and Japan

Flow International Corporation
23500 - 64th Avenue South
P.O. Box 97040
Kent, Washington 98064-9740 USA
Telephone: (206) 850-3500
Fax: (206) 872-3285
TOLL-FREE: (800) 446-3569

Europe, Middle East and Africa

Flow Europe GmbH
Daimlerweg 6, D-6100
Darmstadt, Germany
Telephone: 011-49-6151-88030
Fax: 011-49-6151-893822

Asia

Flow Asia
No. 2 Technology 3rd Road
Science-Based Industrial Park
Hsin Chu, Taiwan ROC
Telephone: 011-886-35-772102
Fax: 011-886-35-773070

Regional Sales Representatives are located throughout the United States. Call for the representative nearest you.

International Distributors and Agents

Argentina	Japan
Australia	Korea
Brazil	Mexico
Belgium	New Zealand
Canada	People's Republic of China
Czechoslovakia	Singapore
France	South America
Great Britain	Spain
Hong Kong	Sweden
India	Switzerland
Indonesia	Taiwan
Italy	

FLOW INTERNATIONAL CORPORATION

FIC-S1003A Printed in U.S.A.

FLOW INTERNATIONAL CORPORATION

Application Profile: **Nuclear Decontamination**

Battelle operates Pacific Northwest Laboratory (PNL) at DOE's Hanford site in Richland, Wash., conducting research programs and technical demonstrations involving radioactive materials. The photo below, shot in FLOW's Demo Lab, simulates how waterjets could be used in various decontamination procedures.

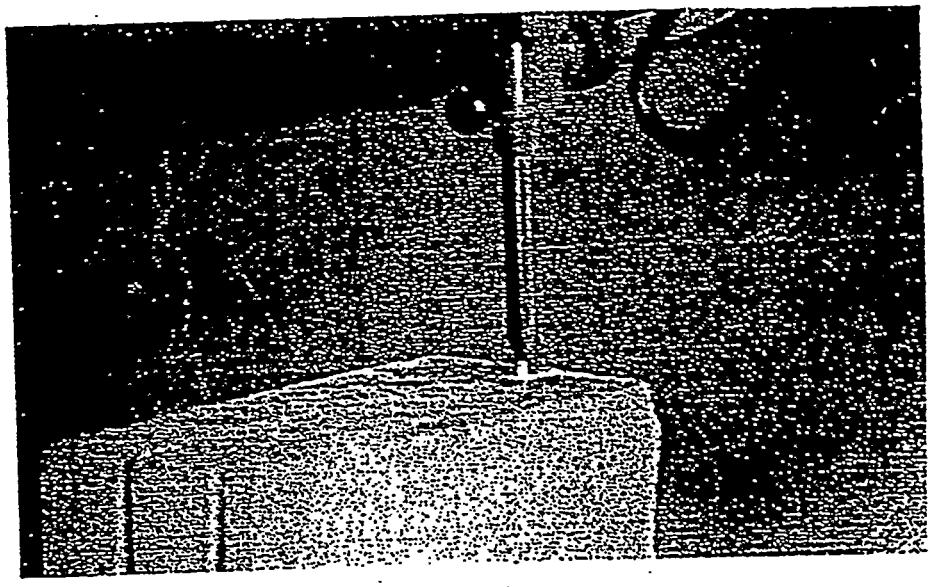

Ultrahigh-pressure waterjet for nuclear applications

Engineers at PNL worked with Flow International Corporation (FLOW) to conduct initial evaluation of ultrahigh-pressure waterjet equipment for nuclear applications. FLOW, based in Kent, Wash., designs and manufactures ultrahigh-pressure waterjet equipment.

The Challenge

Developing safe and viable processes to decontaminate nuclear facilities has proven a challenging task. No single process satisfies the complex requirements involved in nuclear decontamination. Instead, nuclear facilities have successfully combined several processes to achieve the final goal of decontamination. Ultrahigh-pressure waterjet technology recently gained acceptance as a versatile, viable option for cutting and surface preparation work in nuclear decontamination.

Pacific Northwest Laboratory (PNL), Richland, Wash., is a Department of Energy (DOE) multiprogram laboratory dedicated to advancing science and technology to meet national needs. Battelle operates PNL for the Energy Department. The laboratory conducts extensive research programs and technical demonstrations involving radioactive materials. Since 1965, PNL has worked with radioactive materials at the DOE Hanford site located in Richland, Wash. PNL has a major focus on nuclear waste management technology and supports Hanford remediation activities.

Hot-Cell Decontamination

PNL maintains three major hot-cell complexes at Hanford that serve as research facilities for handling high-level radioactive materials in a safe manner. In the 324 Building Radiochemical Engineering Cells, concrete walls measuring 4 to 5 feet in thickness surround the cells to provide radiation shielding. High levels of radiation inside the cells prevent employees from entering the cells to conduct research. Thus, all cells feature remote manipulators that enable operations technicians to grasp materials and control equipment inside the cell.

In 1988, PNL initiated a program to decontaminate the hot cells in the 324 Building. "Our responsi-

(Continued on bac.

bility to be good stewards of the DOE cells has involved doing a lot of research and technology demonstrations in the cells," said Jim Jarrett, Ph.D., manager of remote programs and program development in PNL's waste process engineering department. "We are now completing a major clean-up in order to get ready for future work in the cells."

The clean-out project entails removing surface contamination from the old equipment and components inside the cell, cutting them into smaller pieces and placing them in 55-cubic foot containers for ultimate disposal. PNL fills excess space in the containers with grout and seals the grouted container in a second container (liner) for proper disposal at Hanford.

The liner is placed in a Department of Transportation-approved cask and shipped to the Hanford disposal site. Cranes remove the liner from the cask and place it into the ground. Technicians handle all radioactive waste through remote controls, in accordance to PNL guidelines limiting employee access to radioactive material.

During decontamination of the 324 Building C-Cell in 1988, PNL employed machinery such as plasma arc, abrasive cutting wheels and air operated hacksaws to cut components to more manageable sizes. Electropolishing, low-pressure water and chemical baths stripped radioactive waste from the equipment. Much of the machinery used during this first project required customization for use with manipulators.

Engineers determined that decontamination of B-Cell would consume a greater amount of time than previous work on the C-Cell. While decontamination of C-Cell took 1.5 years to complete, Jarrett anticipated similar operations on the B-Cell to last six to seven years. Jarrett cited the magnitude of radioactive contamination in B-Cell as the main factor behind the project's length.

B-Cell measures 25 feet long, 22 feet wide and 30 feet high. PNL's challenge in decontaminating B-Cell centered around the glass melter located inside the cell. The melter stands nearly 20 feet high and rests on a large rack made of pipe measuring 8 inches in diameter. PNL will cut the structure into small parts to fit into a 4 foot diameter by 5 foot-high container.

Additionally, while the melter was fabricated from metal, it also contained refractory insulation. Plasma arc proved successful for cutting metal, but not the refractory bricks. The existence of nonmetallic materials required PNL to begin searching for a process to cut a diverse range of materials.

"As ultrahigh-pressure water technology has advanced, additional applications have evolved," said Jarrett. "We want to continue applying the technology and advancements in the technology."

PNL is hopeful that ultrahigh-pressure waterjet technology will be a solution to its cutting and surface cleaning requirements. The laboratory originally used high-pressure water at pressures of 30,000 pounds per square inch (psi) to perform decontamination in C-Cell. "As ultrahigh-pressure water technology has advanced, additional applications have evolved," said Jarrett. "We want to continue applying the technology and advancements in the technology."

Engineers at PNL worked with Flow International Corporation (*FLOW*), a manufacturer of ultrahigh-pressure waterjet equipment and accessories based in Kent, Wash., to conduct extensive testing of ultrahigh-pressure waterjet equipment. Engineers tested the equipment at pressure levels ranging from 40,000 to 55,000 psi, using different cutting speeds and abrasive, and varying the distance between the nozzle and work piece to customize the process for its application.

The main criterion *FLOW* needed to satisfy was proving the viability of ultrahigh-pressure waterjet and abrasive waterjet technology for surface decontamination and size reduction. The equipment also needed to demonstrate the capability to operate and maintain functionality in a highly radioactive environment. "The challenge is in finding equipment that will directly, or with a little modification, work in a radioactive environment," said Jarrett. "There are very few pieces of equipment PNL can use off the street without first making modifications."

Another consideration revolved around safety. PNL concerns itself with safety first and

foremost when testing new processes. After completing the intensive testing, PNL and *FLOW* determined that ultrahigh-pressure waterjet and abrasive waterjet technology warrants further evaluation for nuclear decontamination applications.

Testing to date has revealed the abrasive waterjet's capability to cut the metal and refractory bricks of the melter. The equipment appears easily modified for use with the manipulators. Cutting with an abrasive cutting wheel mounted on a manipulator proved difficult due to the wear on the manipulator.

An ultrahigh-pressure abrasive waterjet system includes the following components:

- *The pump:* A 60-horsepower intensifier pump which delivers water up to 55,000 psi.

- *The plumbing:* Ultrahigh-pressure hardware such as stainless steel plumbing, flexible hose, swivels and cutting heads.

- *The motion equipment:* Manipulators with external controls for positioning the cutting head inside the radioactive cell.

During operation, the ultrahigh-pressure pump forces the water through a small sapphire orifice 0.004 inch to 0.020 inch in diameter. This forms a coherent, high-velocity waterjet stream traveling at up to three times the speed of sound.

To cut hard materials, abrasive waterjet systems entrain a garnet abrasive in the waterjet stream to increase cutting power ten-fold. Moving at supersonic speeds, the abrasive particles act as micro cutting tools to erode virtually any material.

Ultrahigh-pressure waterjets show promise for removing radioactive materials from the melter, support rack and tubing. Previously, PNL has used low-pressure waterjets to perform this operation. Jarrett believes removing the contamination from equipment parts with ultrahigh-pressure waterjets could save a significant amount of money in the future.

Ultrahigh-pressure waterjet cleaning differs from waterblasting technology in several respects. The term ultrahigh pressure technically refers to pumps with working pressure of more than 28,000 psi. Using low volumes of water (2 to 7 gallons per minute), waterjets strip paints and coatings by striking their targets with a highly focused beam of energy. Waterblaster pumps saturate their target by delivering a high volume (20 to 250 gpm) of energy over a wider target area.

The ultrahigh-pressure waterjet cleaning process involves water pressurized at levels between 35,000 to 55,000 psi. The water travels through small orifices in a high-speed rotating nozzle, forming a cohesive stream. Materials are removed by the energy generated through water traveling at speeds between 2,280 and 2,860 feet per second.

The decontamination of B-Cell is about 60 percent complete. "No one approach is applicable to hot cell clean-out," said Jarrett. "If waterjet technology works as well as we hope, it will be a nice addition to the technologies we already have available. There are waterjet applications we haven't even thought of that we know are there."

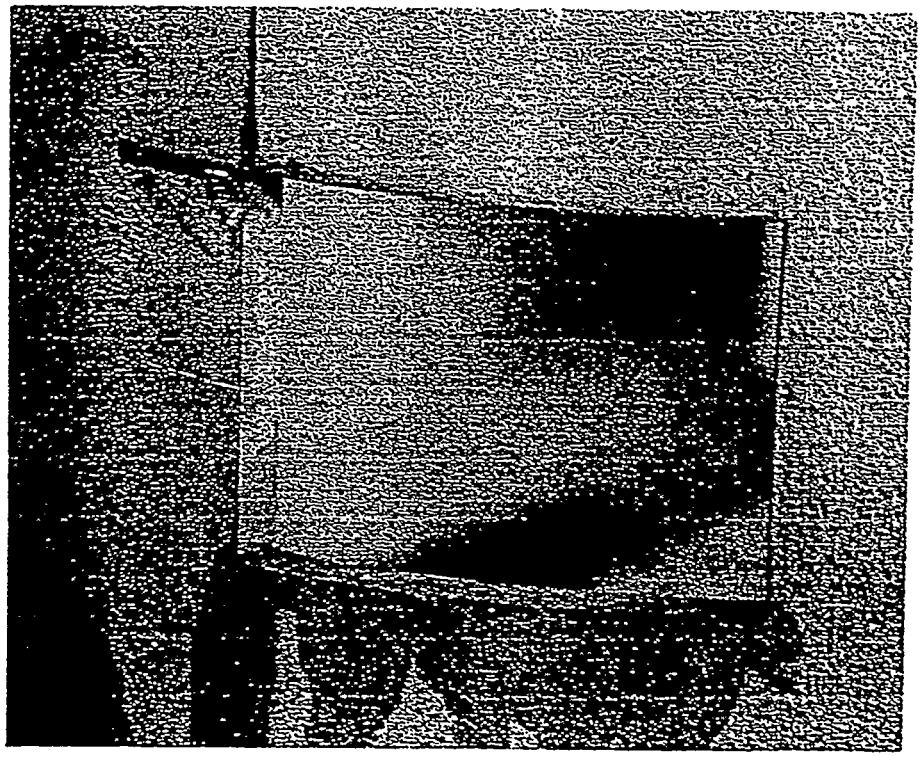

Abrasive waterjet capably cuts stainless steel in Flow International Corporation's Demo Lab in Kent, Wash.

Flow International Corporation
is the world leader in ultrahigh-pressure waterjet and abrasivejet technology for industrial cutting and cleaning.

North and South America, Australia and Japan

Flow International Corporation
23500 - 64th Avenue South
P.O. Box 97040
Kent, Washington 98064-9740 USA
Telephone: (206) 850-3500
Fax: (206) 813-3285
TOLL-FREE: (800) 446-3569

Europe, Middle East and Africa

Flow Europe GmbH
Daimlerweg 6, D-64293
Darmstadt, Germany
Telephone: 011-49-6151-88030
Fax: 011-49-6151-893822

Asia

Flow Asia
No. 2 Technology 3rd Road
Science-Based Industrial Park
Hsin Chu, Taiwan ROC
Telephone: 011-886-35-772102
Fax: 011-886-35-773070

Regional Sales Representatives
are located throughout the United States. Call for the representative nearest you.

International Distributors and Agents

Argentina
Australia
Brazil
Belgium
Canada
Chile
Czechoslovakia
France
Great Britain
Hong Kong
India
Indonesia
Italy
Japan
Korea
Mexico
New Zealand
People's Republic of China
Singapore
Spain
Sweden
Switzerland
Taiwan

For more information, contact Jim White, National Sales Manager, Flow International Corporation, at (800) 446-3569 or (206) 850-3500.

FLOW INTERNATIONAL CORPORATION

© 1993 Flow International Corporation

Ultra High Water Pressure Jet Cutting and Jet Blasting Equipment

David Ritz
Sales Coordinator

Jet Edge

Ultra-High Water Pressure
Jet Cutting and Jet Blasting Equipment

Jet Edge, Inc.
825 Rhode Island Ave. So.
Minneapolis, MN 55426

612-545-1477
800-JET-EDGE
FAX 612-545-5670

Cutting Components

Jet Edge®
A Subsidiary of Possis Corporation

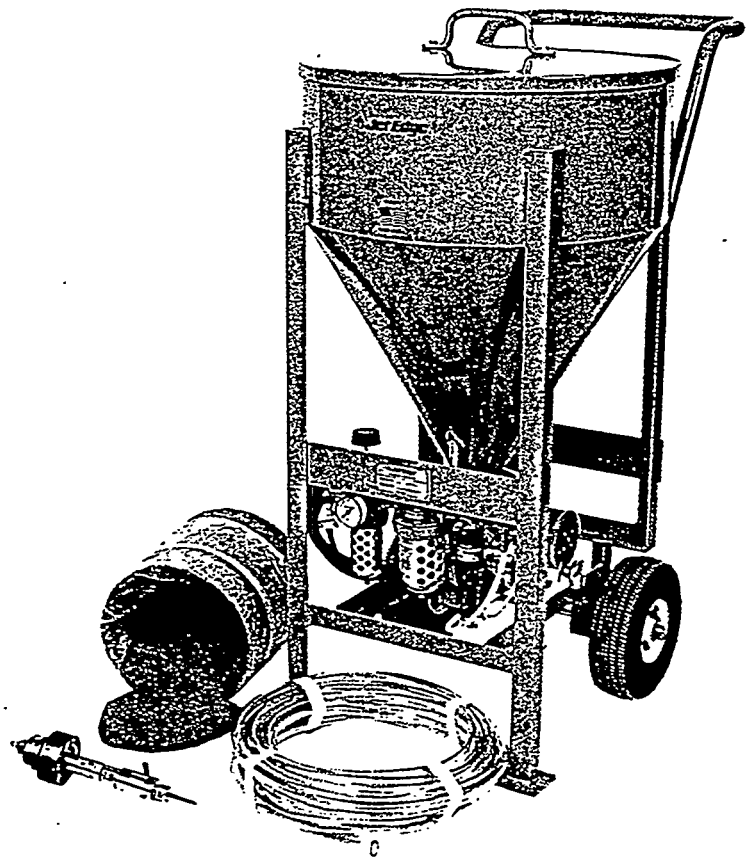

Abrasivejet Cutting Package

Jet Edge manufactures a complete line of integrated ultra-high pressure (UHP) equipment to satisfy the demands of both waterjet and abrasivejet cutting applications. The broad range of UHP intensifier pumps, motion systems, cutting tables and ancillary components offers the flexibility to meet any cutting requirement.

Jet Edge UHP pumps use proven intensifier designs to generate continuous operating pressures of up to 60,000 psi with a variety of horsepower ratings. The intensifier pumps support single or multiple cutting stations for increased productivity. The compact design of the waterjet and abrasivejet cutting heads promotes integration with motion systems ranging from 2-axis XY tables to sophisticated multi-axis robotic installations.

The Jet Edge OmniJet® II Cutting Head provides a coherent waterjet stream for optimum cutting of low density, soft materials. Abrasivejet cutting of hard materials is accomplished by adding abrasive to the waterjet stream through the Permalign® Cutting Head. The patented design of the Permalign® ensures orifice and nozzle alignment and maintains tool center point location on multi-axis cutting systems. This speeds production processes by eliminating downtime due to operator adjustments. Abrasive flow is accurately metered to the cutting head by the Abrasive Delivery System.

OmniJet® II Cutting Head

The OmniJet® II Cutting Head creates a coherent waterjet cutting stream and provides responsive on/off control for the UHP water. The lightweight and compact size offers versatility in multi-directional cutting applications with all motion control systems. Cutting performance, size, component service life and ease of maintenance make this the superior cutting tool for all waterjet cutting applications.

The OmniJet® II is designed and tested for pressures up to 60,000 psi and orifice sizes ranging from .003 to .020 inches. The cutting head has a fail-safe valve design requiring air pressure to open. Water flow to the orifice is regulated by the needle and seat. For waterjet cutting, the orifices are premounted in a set-screw style retainer making them easy to change with an allen wrench. Consistent stream coherency is achieved by stabilizing the water prior to entering the orifice.

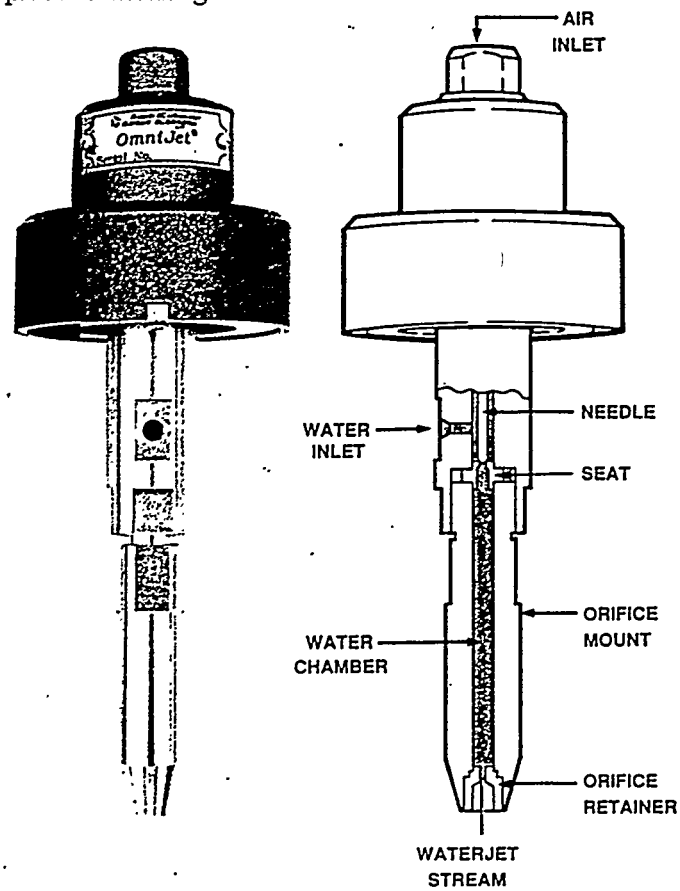

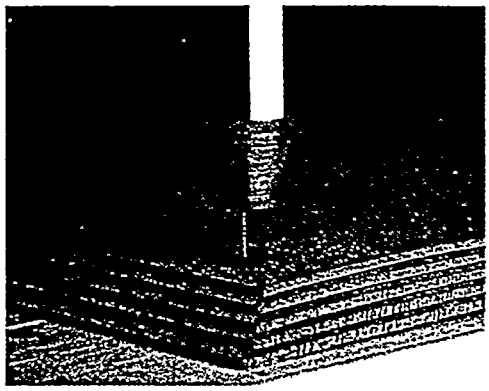

Extended Performance Life

The OmniJet® II has been rigorously tested under high-duty cycle conditions. A unique seal and needle arrangement provides long life for all components, including the orifice. The modular design makes replacing parts a quick and simple procedure.

Multiple Configurations

The OmniJet® II can also be configured to accomplish custom cutting arrangements. Longer orifice mounts are available for cutting in hard to reach areas. The Remote Valve option supports multiple cutting streams by separating the valve from the cutting head. The OmniJet® II is also designed for abrasivejet applications with the addition of the Permalign® Cutting Head.

Specifications:

Length	9.25 in (23.5 cm)
Diameter at top	3.3 in (8.5 cm)
Weight	3.25 lbs (1.5 kg)
Operating air pressure (min)	60 psi (4 bar)
Water pressure (max)	60,000 psi (4138 bar)
Orifice range	.003 - .020 in (.08 - .51 mm)

Options:

- Extended Orifice Mount Lengths
- Remote Valve
- Permalign® Abrasive Cutting Head
- Various Mounting Arrangements

Permalign® Cutting Head

The Permalign® Cutting Head combined with the OmniJet® II achieves ultimate performance and reliability for abrasivejet cutting. The Permalign® entrains dry abrasive into the high velocity water stream within the mixing chamber. The resulting mixture exits through the nozzle as a high velocity, coherent abrasivejet stream capable of cutting any material.

The Permalign® Cutting Head, when used with the OmniJet® II, is rated for pressures up to 60,000 psi, orifice sizes ranging from .003 to .020 inches, and nozzle sizes from .020 to .065 inches ID. This flexibility in range allows handling of small intricate cuts as well as thick cuts requiring higher abrasive and water flow rates. Nozzles constructed of either extended-life composite carbide or tungsten carbide are available.

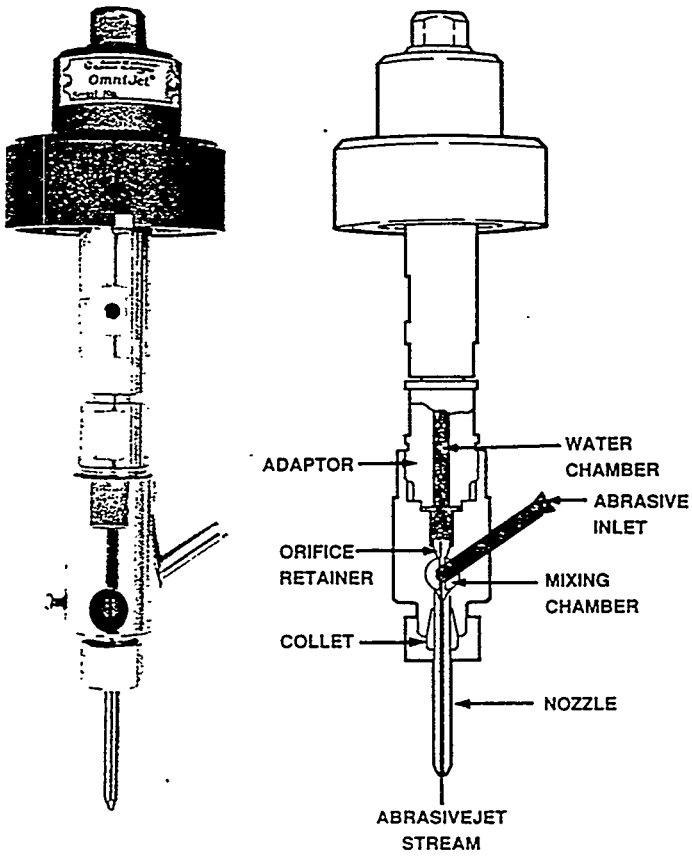

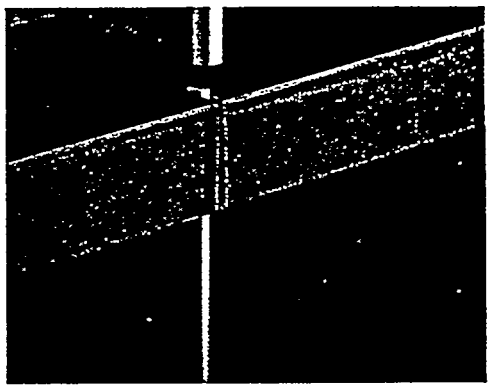

Consistent Alignment

The patented design of the Permalign® Cutting Head ensures consistent alignment of the water stream and the abrasive nozzle without additional adjustments. The fixed location of the orifice and nozzle provide a consistent tool center point for the cutting stream. This is achieved by premounting the orifice in a tapered retainer and holding the precision ground nozzle in the collet. When installed into the abrasive head, opposing concentric tapers hold the orifice and nozzle in alignment.

Superior Performance

Orifice and nozzle replacement requires no additional adjustments and provides for superior stream alignment. The Permalign® Cutting Head along with the OmniJet® II offers a lightweight, compact and versatile solution to your abrasivejet cutting needs.

Specifications:

Length	11.38 in (29 cm)
Weight	4.25 lbs (2 kg)
Operating air pressure (min)	60 psi (4 bar)
Water pressure (max)	60,000 psi (4138 bar)
Orifice range	.003 - .020 in (.08 - .51 mm)
Nozzle range	.020 - .065 in ID (.51 - 1.65 mm)

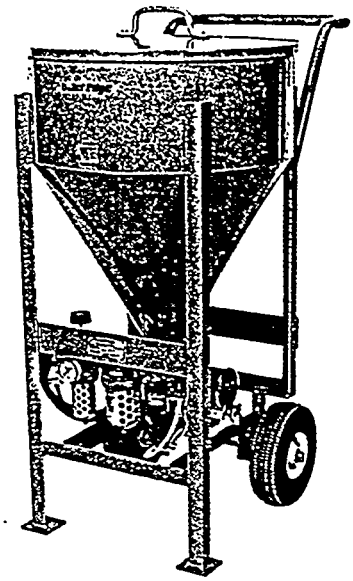

Abrasive Delivery System

Jet Edge developed the Abrasive Delivery System to accurately meter abrasive to the Permalign® Cutting Head. This system stores and conveys the abrasive over long distances to produce an abrasivejet capable of cutting through virtually any material.

Hours of uninterrupted abrasivejet cutting are supported with the large storage capacity of the hopper. In addition, the conical shape provides reliable abrasive flow to the metering gate.

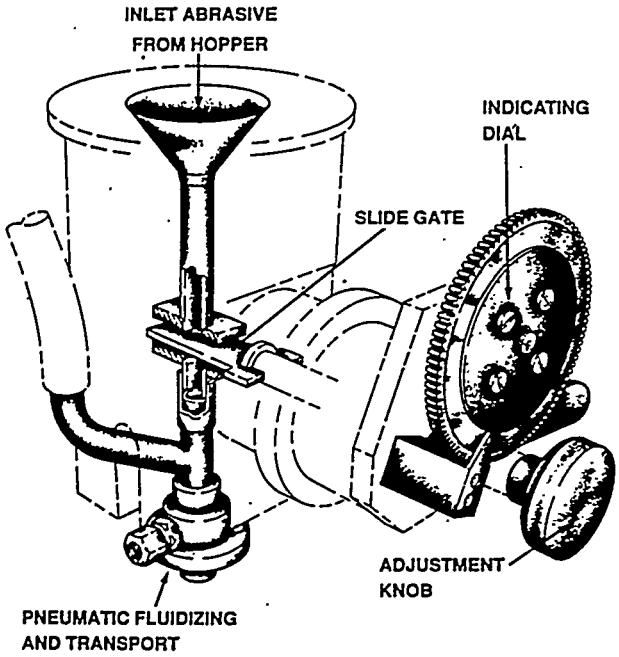

Slide Gate Metering Valve and Pneumatic Transport for Abrasive Delivery

Complete Abrasive Control

Consistent abrasivejet cutting performance requires accurate metering and reliable on/off control of abrasive to the cutting head. This is accomplished with a pneumatically actuated slide gate. The adjustment knob controls the slide gate opening for precise abrasive flow rates and the indicating dial provides an accurate reference mark for the position of the slide gate.

Fluidized Abrasive Delivery

The abrasive flow to the cutting head is fluidized with a low volume of compressed air. The even distribution of abrasive entering the cutting head promotes reliable cutting results.

Pneumatic abrasive delivery maintains a consistent delivery rate independent of delivery distance and elevation changes. Also, selected changes in the waterjet pressure for piercing brittle materials, such as glass, ceramic and composites, do not affect the abrasive delivery rate.

Specifications:

Height	43 in (109 cm)
Width	23 in (58 cm)
Depth	36 in (92 cm)
Weight	85 lbs (38 kg)
Capacity	400 lbs (180 kg)
Abrasive delivery rate	.25 to 3 lbs/min (.11 to 1.4 kg/min)
Repeatable delivery within .25 to 3 lb/min range	± .05 lbs/min (± .022 kg/min)
Abrasive size	36 to 150 mesh

825 Rhode Island Avenue South • Minneapolis, MN 55426 • U.S.A. • 612-545-1477 • 800-JET-EDGE • FAX 612-545-5670

Intensifier Pumps

Jet Edge

A Tradition of Innovation and Excellence

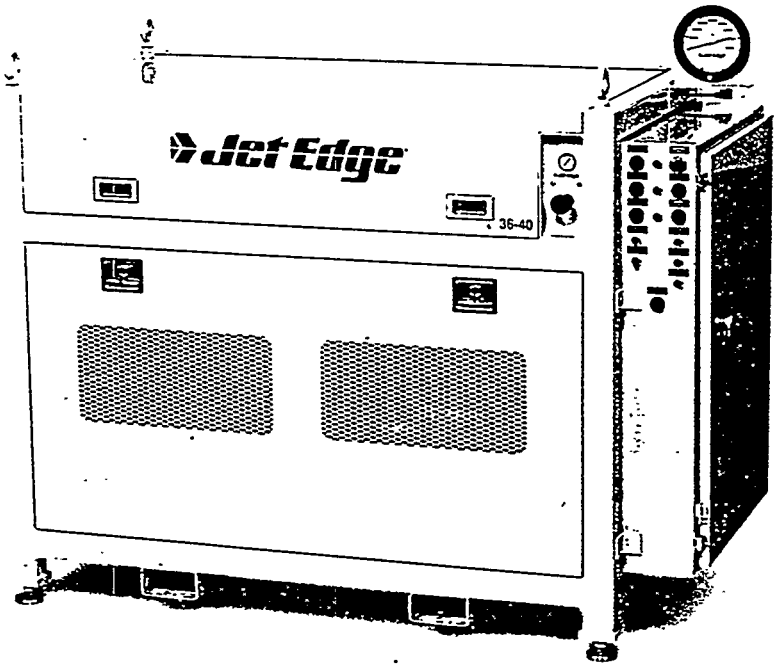

he full range of ultra-high pressure (UHP) intensifier pumps are the heart of the waterjet cleaning and cutting systems manufactured by Jet Edge. The pumps are capable of adjustable output pressures from 5,000 to 36,000 psi (345 to 2500 bar) with flow rates up to 6.1 gpm (23.1 lpm).

The pumps utilize a pressure-compensated hydraulic system to drive plunger style intensifiers. The use of hydraulic fluid power provides smooth flowing UHP water resulting in long system life. Reliable and precise control of the electronically shifted intensifiers ensures superior performance standards with reduced operating costs.

All units feature rugged steel welded framework with removable access panels for convenient machine inspection and maintenance. The pumps are built with either a skid mounted frame or an integrated trailer package for system transportation. Lifting eyes and fork-lift guides are provided for increased mobility.

Jet Edge manufactures standard and custom-designed cleaning and cutting systems to meet your specific needs. Accessories such as lances, manifolds and tools are built with quality for long-term operation.

Years of research and design have developed Jet Edge ultra-high pressure pumps into the most reliable in the industry.

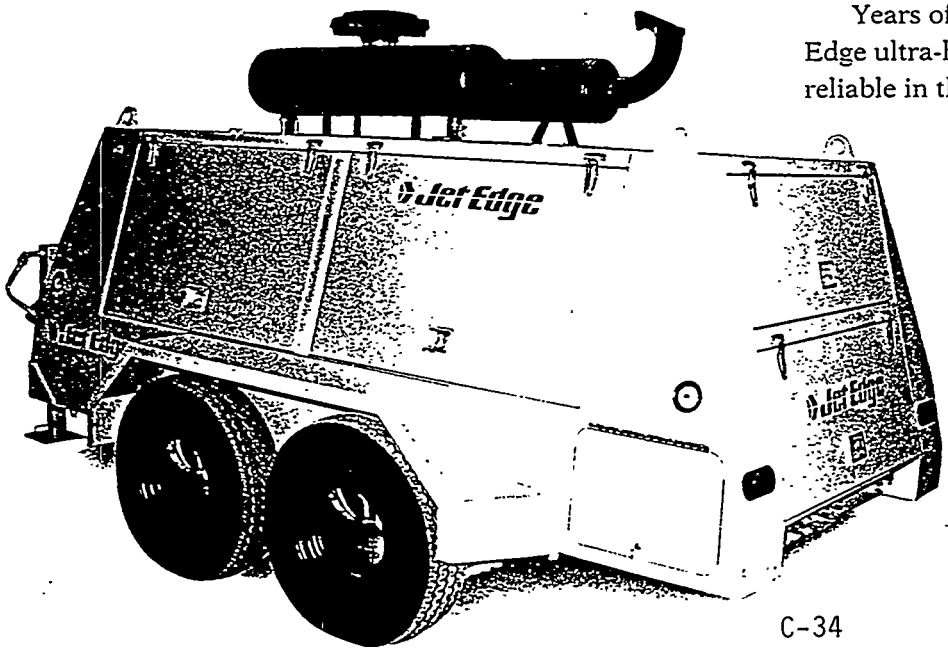

Jet Edge

The **Intensifier** multiplies input hydraulic pressure to generate ultra-high pressure water. The intensifier is built with the highest quality and includes innovative long-life check valves for reliable operation. Tie-rod construction ensures stability and strength.

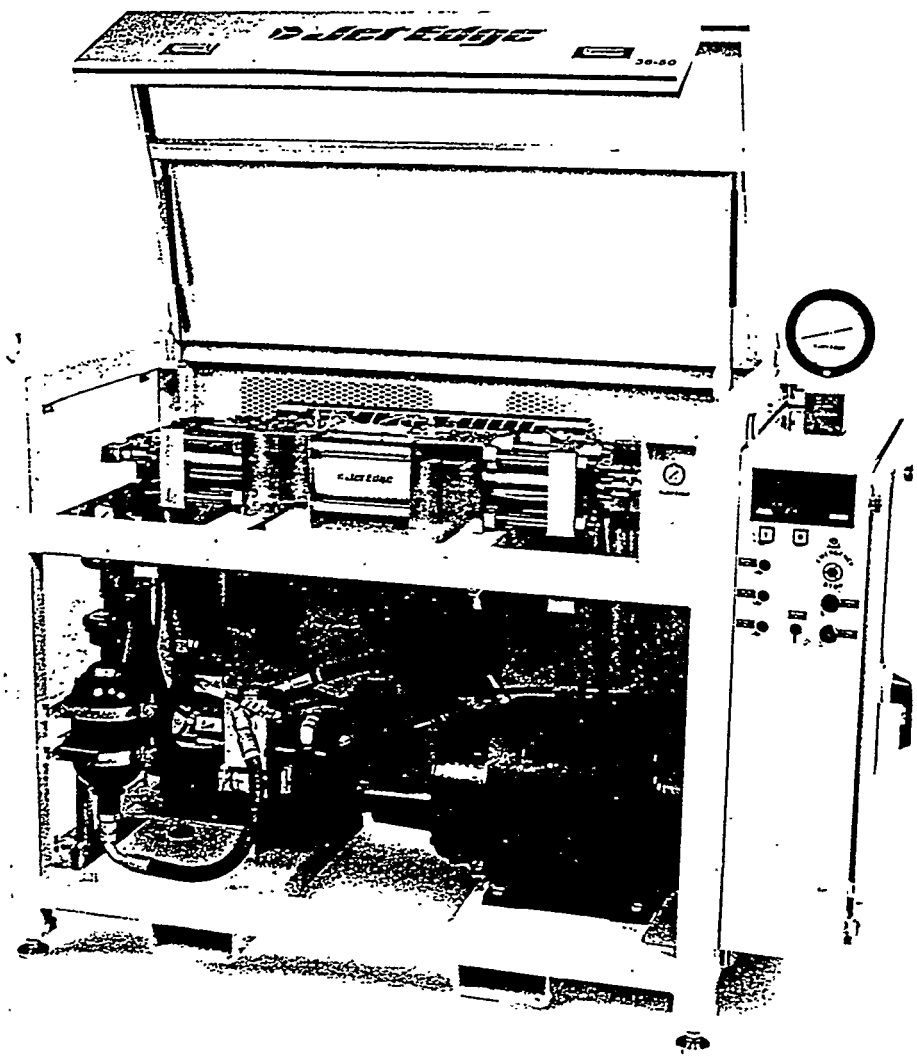

The in-line **Filtration** cleans water through a series of filters down to 1 micron. The boost pump pressurizes the incoming water and maintains a constant flow to the intensifier.

With a variable displacement pressure-compensated **Hydraulic Pump,** only the water flow required for the specific job is produced. Pressure compensation maintains steady flow rates when operating multiple tools.

Rugged steel welded **Framework** and **Access Panels** make all parts easily accessible for machine inspection and routine maintenance.

A heavy-duty, high efficiency **Electric Motor** with integrated wye-delta soft start package ensures reliability and efficient power consumption.

The NEMA 12 rated **Electrical Cabinet** contains system controls and machine status display. The console provides on-line diagnostics and pressure control via the electronic controls which regulate and monitor system operation. The electrical distribution components are mounted within the panel including a fused disconnect, motor starter and control switches.

Power Made Simple . . .

The intensifier acts as an amplifier as it converts the energy from the low pressure hydraulic fluid into ultra-high pressure water. The hydraulic system provides fluid power to a reciprocating piston in the intensifier center section. A limit switch, located at each end of the piston travel, signals the electronic controls to shift the directional control valve and reverse the piston direction.

The intensifier assembly, with a plunger on each side of the piston, generates pressure in both stroke directions. As one side of the intensifier is in the inlet stroke, the opposite side is generating ultra-high pressure output. During the plunger inlet stroke, filtered water enters the high pressure cylinder through the check valve assembly. After the plunger reverses direction, the water is compressed and exits as ultra-high pressure water.

The attenuator smooths the water flow from the intensifier and delivers a constant and steady stream of ultra-high pressure water to the tool.

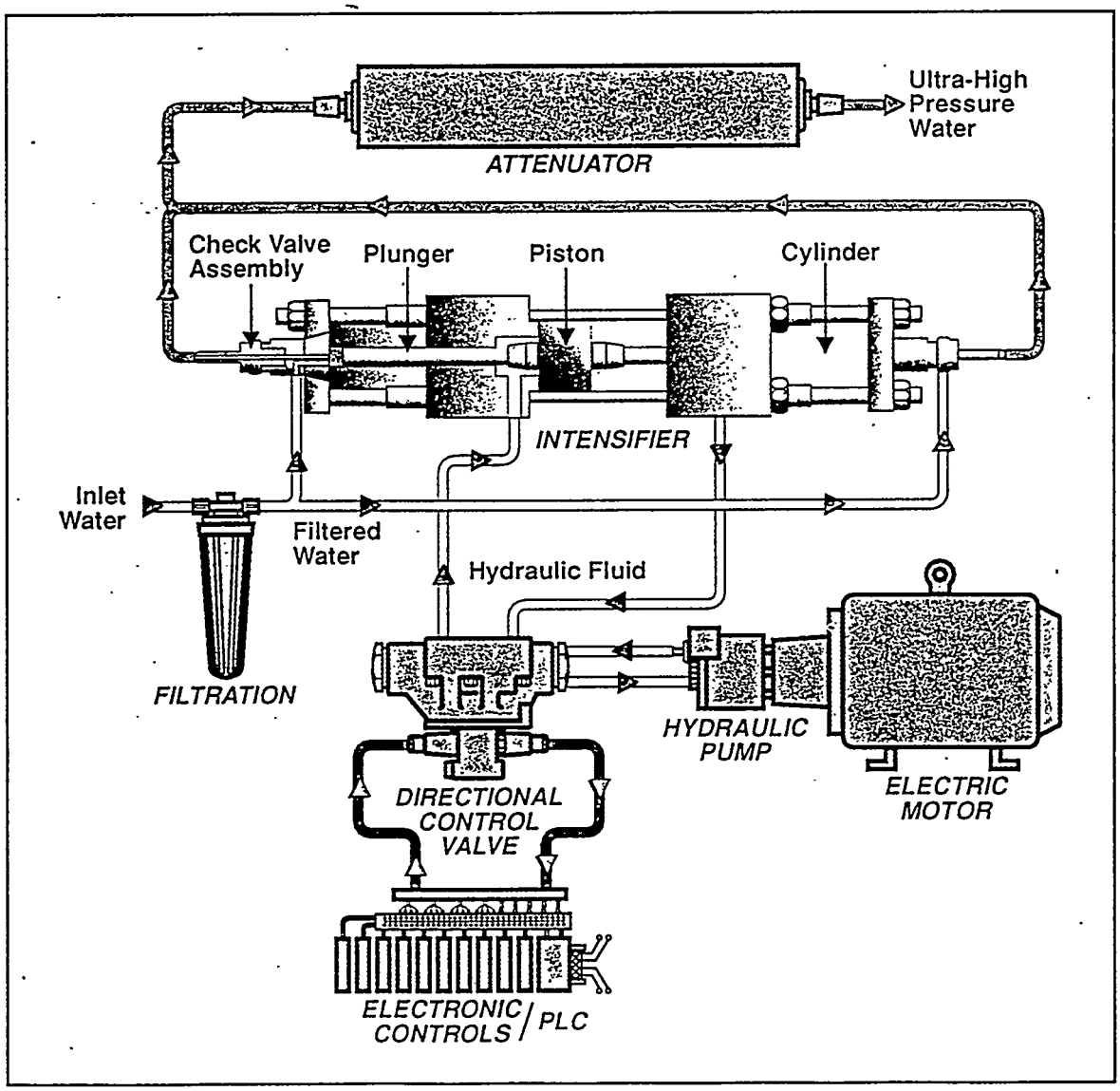

Standard Features:

- Electronically Shifted Intensifier(s)
- Safety Shutdown Systems
- Automatic Safety Pressure Bleed-Down Valve
- Incoming Water Supply Booster Pump
- 1 Micron Water Filtration
- 0.5 Gallon (1.9 Liter) High Pressure Attenuator
- Axial Piston, Variable Displacement, Pressure-Compensated Hydraulic Pump
- Liquid Filled Gauges and UHP Water Gauge
- UHP Safety Shielded Tubing
- Heavy Gauge Sheet Metal Covers
- Lifting Eyes

Performance Features*:	**36-40**	**36-50**	**36-100**	**36-200**	**36-250D**
Continuous Output Pressure	36,000 psi (2500 bar)				
Intensification Ratio	12:1				
Intensifier Configuration	Single		Dual		
Flow Rate	1.2 gpm (4.5 lpm)	1.9 gpm (7.2 lpm)	4.0 gpm (15.1 lpm)	6.1 gpm (23.1 lpm)	6.1 gpm (23.1 lpm)
Recommended Maximum Rated Orifice Size**	.019 in (.48 mm)	.023 in (.58 mm)	.034 in (.86 mm)	.040 in (1.02 mm)	
Plunger Strokes per Minute with Maximum Rated Orifice	28	44	43	60	
Motor Output	40 hp (30 kw)	50 hp (37 kw)	100 hp (75 kw)	200 hp (149 kw)	250 hp (187 kw)
Motor	Electric				Diesel
Motor Starter	Wye-Delta Soft Start with System Disconnect				N/A
Motor Speed	1,780 rpm				1,850 rpm
Full Load Amps @ 460 VAC (60 Hz)	49	60	119	233	N/A
Full Load Amps @ 230 VAC (60 Hz)	98	120	238	466	N/A
Full Load Amps @ 380 VAC (50 Hz)	61	73	145	280	N/A
Electronic Controls	Relay (PLC Option)		PLC		
Hydraulic Circuit	Open Loop			Closed Loop	
Hydraulic Accessory Port	1 Port with 3 gpm @ 1,500 psi		2 Ports with 6 gpm @ 1,500 psi	2 Ports with 8 gpm @ 1,500 psi	
Water Filtration Cartridges	1		2	4	
Air Compressor	N/A			21 cfm @ 125 psi	13 cfm @ 100 psi
Skid Mount Frame	Standard			Option	
Dimensions*:					
Length	76 in (193 cm)	80 in (203 cm)	96 in (224 cm)	192 in (488 cm)	
Width	37 in (94 cm)			92 in (234 cm)	
Height	52 in (132 cm)		60 in (152 cm)	85 in (216 cm)	
Weight	2,980 lbs (1,352 kg)	3,020 lbs (1,370 kg)	4,600 lbs (2,087 kg)	8,750 lbs (3,970 kg)	9,980 lbs (4,527 kg)

* Specifications subject to change. ** No hydraulic accessory load (36-40, 36-50, 36-100). 793

825 Rhode Island Avenue South Minneapolis, MN 55426 U.S.A. 612-545-1477 800-JET-EDGE FAX 612-545-5670

APPENDIX D

Diamond Core Drilling

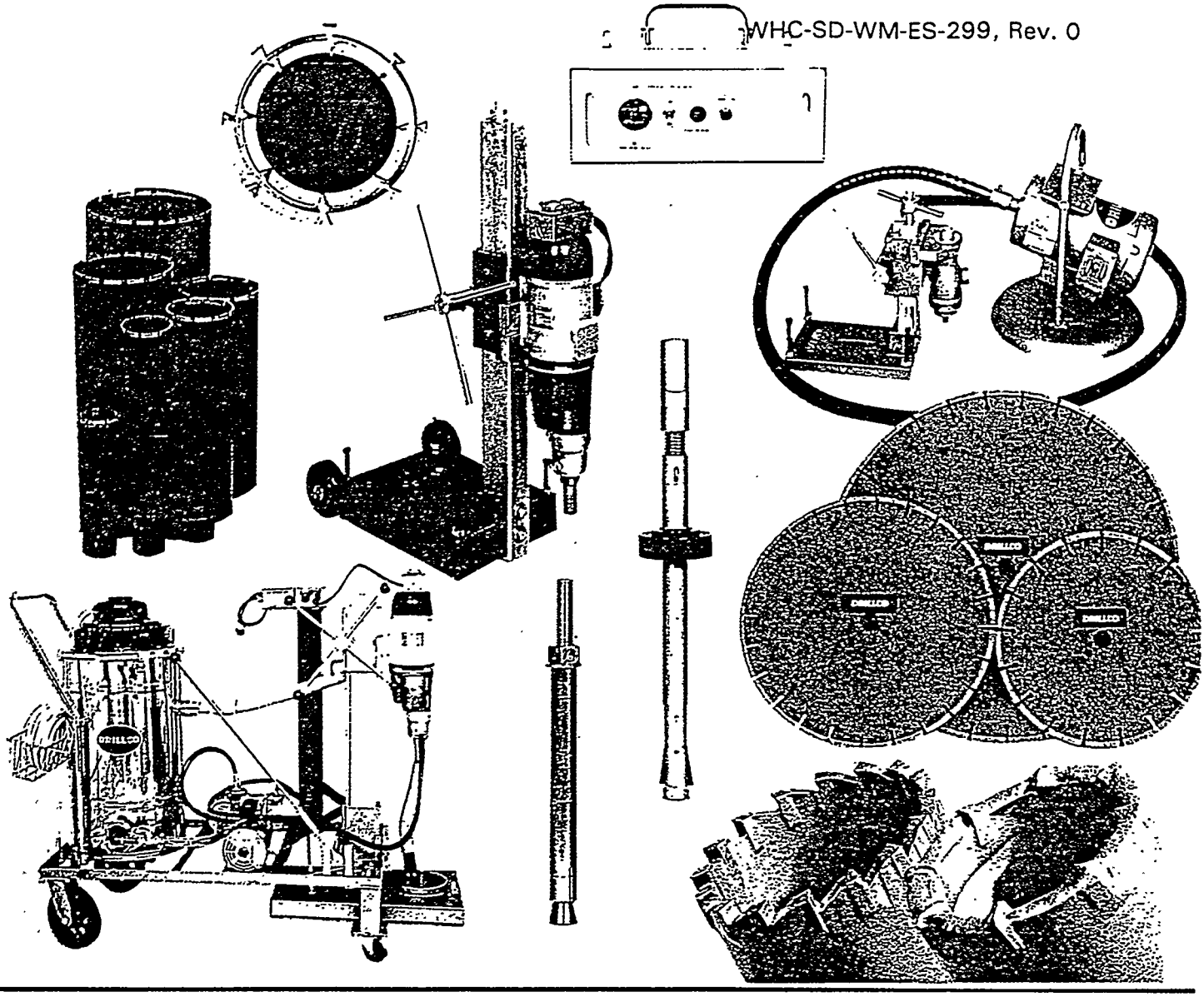

DRILLCO

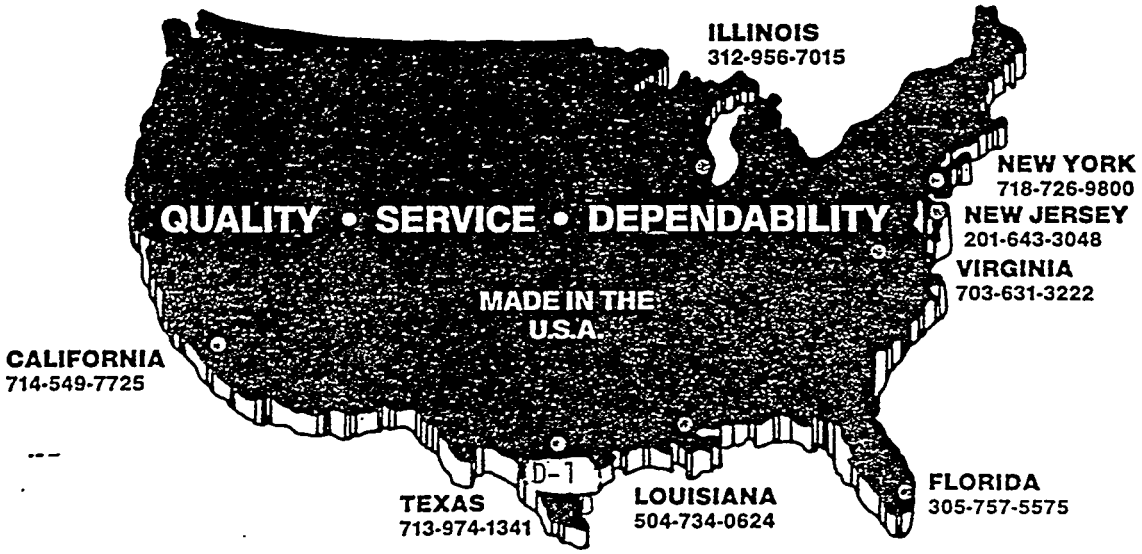
ILLINOIS
312-956-7015
NEW YORK
718-726-9800
NEW JERSEY
201-643-3048
VIRGINIA
703-631-3222
QUALITY • SERVICE • DEPENDABILITY
MADE IN THE U.S.A.
CALIFORNIA
714-549-7725
TEXAS
713-974-1341
LOUISIANA
504-734-0624
FLORIDA
305-757-5575

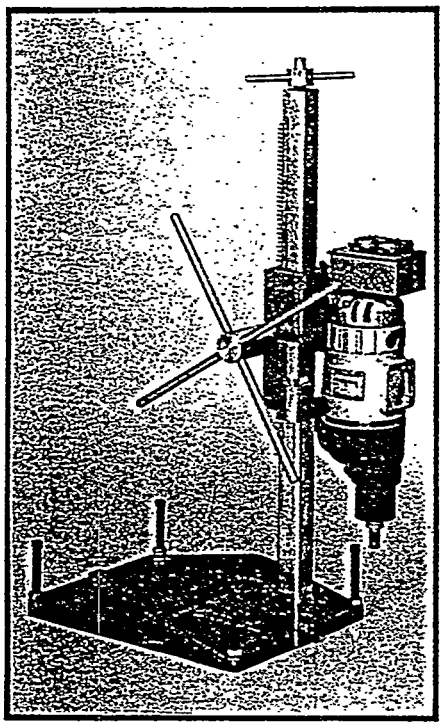

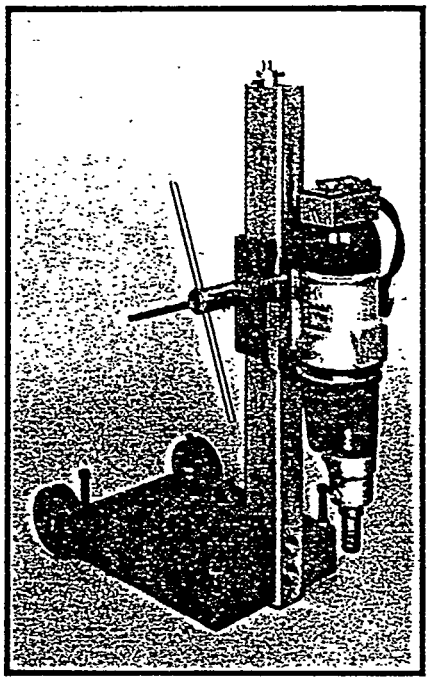

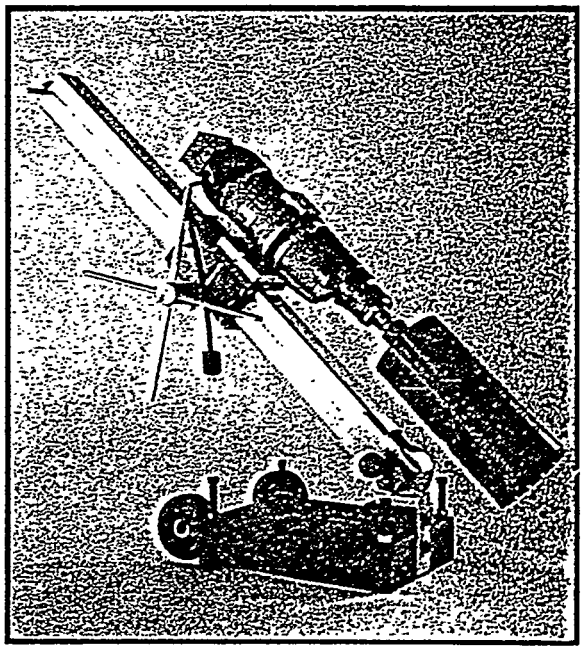

D-125 DRILLING MACHINE

The D-125 is designed for use with the Drillco Rebar Eater® and small diameter "Hole Quick" diamond core bits. Significantly lighter than competitive drilling machines, the D-125 is easy to mount and position on walls or ceilings. The machine's "T" slot base allows a four hole pattern to be drilled with one anchor or vacuum pad set up.

This drilling unit comes complete with a 10 amp 1200 RPM motor with ⅝"-11 spindle thread.

D-500 DRILLING MACHINE

D-500 units are available with either of two drill stand bases. The large base (12" × 16") provides the stability and strength needed for production drilling on floors and other horizontal surfaces. The small base (6" × 14") is ideal for use on walls and ceilings because of its light weight and manageability. Rigid support necessary for smooth accurate drilling is provided by the heavy duty steel column. Track length is 24 inches.

Either a 15 or 18 amp motor is available with the D-500. Both are two speed 350/900 RPM units. The 15 amp motor has a capacity of up to an 8" diameter bit while the 18 amp motor handles up to 14" bits. Spindle threading for both motors is 1¼"-7.

D-5090 DRILLING MACHINE

Every now and then a particular job requires drilling at an angle other than 90 degrees. Drillco's D-5090 is identical to the standard D-500 core drilling machine except that it may be tilted to accommodate operations at 22½ and 45 degrees as well as the standard upright position. No special tooling is required for setup.

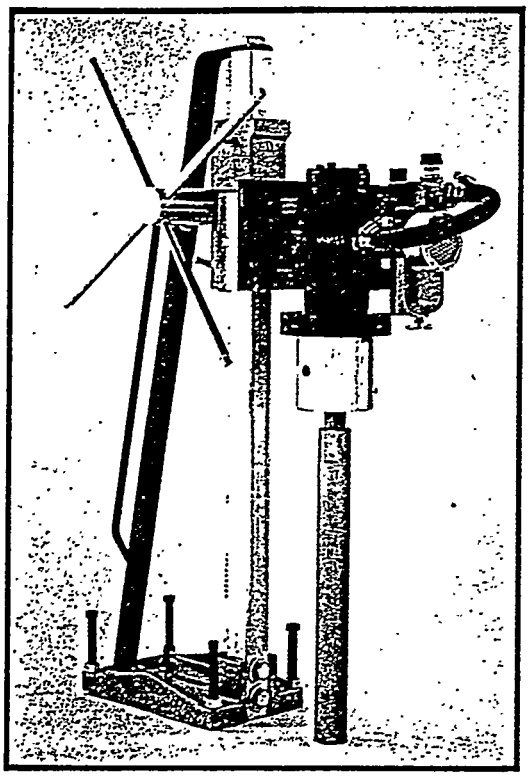

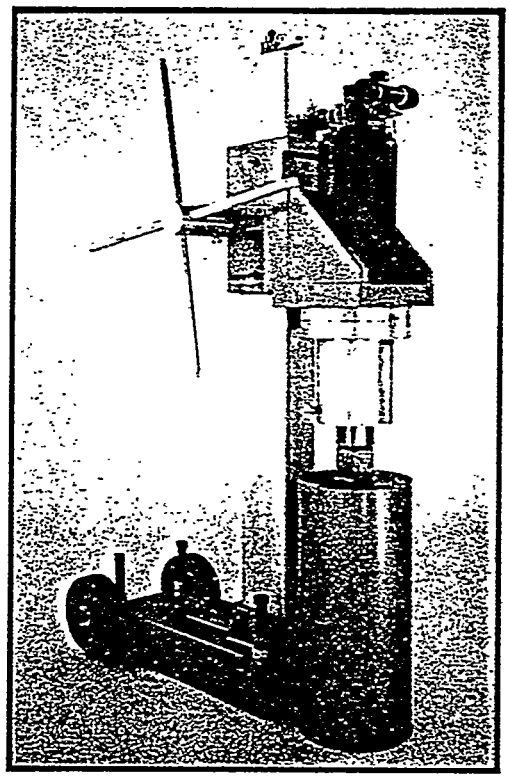

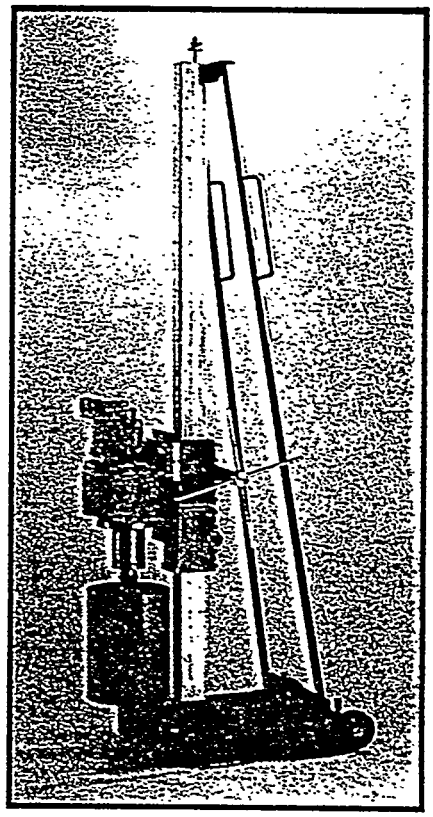

D-4500 DRILLING MACHINE

The D-4500 is a custom-built, 4.5 HP, variable speed, 0-2500 RPM air motor with automatic oiler. A relatively lightweight machine, the D-4500 serves well in high-speed production work drilling small diameter holes. The back brace supplied provides the stability necessary to drill precise sized holes.

D-500-5A DRILLING MACHINE

For large bore holes, the custom-built D-500-5A is an unrivalled workhorse. Each motor possesses a planetary gear reduction setup with integral 1¼"-7 spindle and water swivel housing. The D-500-5A provides 5 HP of power at 92 PSI (6.2 bar) and may be operated at variable speeds of up to 500 RPM for 8" diameter and larger bits, 0-1000 RPM for up to 5" diameter bits. An auto oiler and built in muffler ensure quiet, efficient operation.

D-500-9A DRILLING MACHINE

This machine, the custom-built D-500-9A, handles the really big jobs. Powered by a 9 HP (@ 90 PSI/6.2 bar) super heavy duty motor with built in gear reduction, the D-500-9A expands your drilling capabilities to include 14" to 48" diameter holes. Like the D-500-5A it comes with an auto oiler and 1¼"-7 spindle. The large cast-aluminum base with back brace provides critical stability.

APPENDIX E

Rotary Drilling

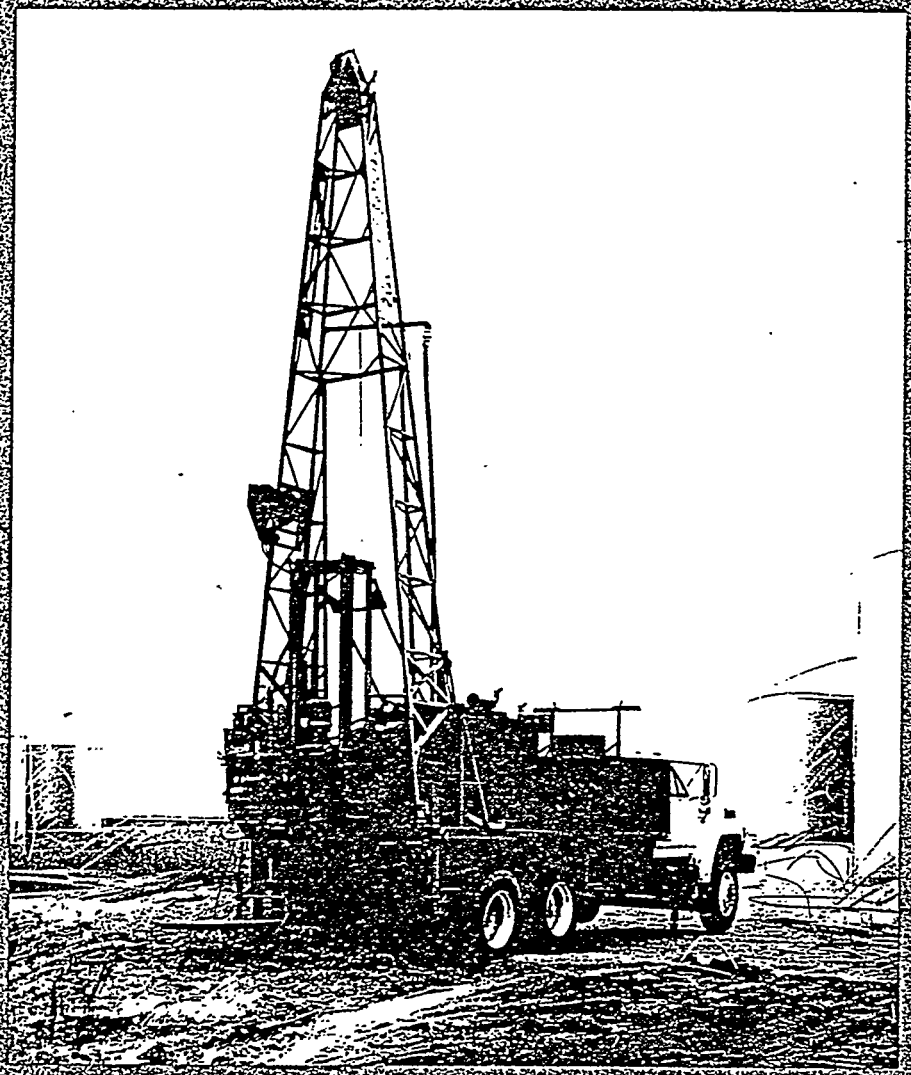

Mobile Drill

B-61 HDX Geotechnical Drill

For Ground Water Monitoring Exploration

Mobile Drill B-61 HDX. Th

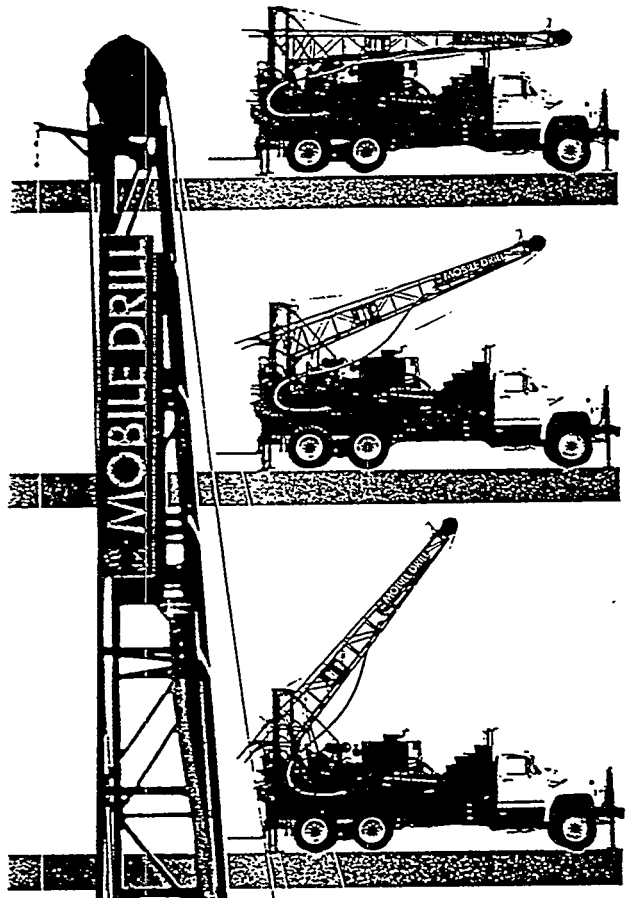

The heavy-duty B-61 HDX is designed for quick set up and ease of operation.

Mobile Drill improved the industry's most dependable, heavy-duty drill. A stronger, more rugged B-61 HDX will endure extreme wear and tear and require less maintenance. It is designed for drilling with large hollow stem augers for ground water monitoring and a full range of geotechnical exploration, including soil investigation.

Capacities

Hollow Stem Auger/Soil Sampling	300 ft.
Auger Drilling	375 ft.
Rotary Drilling	1200 ft.
Diamond Coring	2000 ft.

Torque Converter and Rotary Drive System

Together the advanced rotary system and torque converter combine more power and lasting performance.

The superior Clark Model 28,000 power shift transmission is equipped with three-speed forward and reverse to work the tool string back and forth to break it free. A unique ability to shift-on-the-fly allows the operator to switch gears without interruption.

To reduce maintenance costs, the Clark includes an exclusive high output air-to-oil cooler mounted in the front of the engine and a [illegible] micron replaceable oil filter.

Only Mobile Drill makes a mechanical rotary drive with a hollow spindle I.D. of 4 [illegible] – for large diameter continuous sampling through the spindle.

A separate Inching Control provides focused power during the making and breaking of threaded drill rod connections. The head is totally enclosed with tapered roller bearings on the spindle.

Spindle Torque And Speed Ranges

1 Gear	Spindle Spe[illegible]
2 Gear	Spindle Spe[illegible]
3 Gear	Spindle Spe[illegible]

Optional rpm packages a[illegible]

Control Panel

All controls are mounted on the left rear of the drill for maximum visibility to the hole collar. All

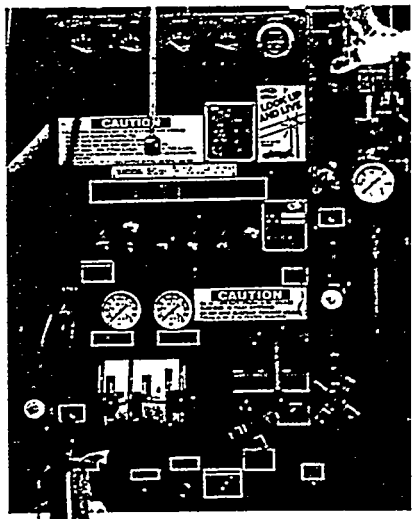

workhorse of the industry.

necessary engine and hydraulic circuit controls and gauges are on the panel to monitor all functions from one location.

Base Plate
For more flexibility, the Base Plate has been opened up to 15½" to pass a 10¼" I.D. hollow stem auger. The entire drill frame is mobile to control on- and off-hole movement.

Max Torque **20,000** ft/lbs

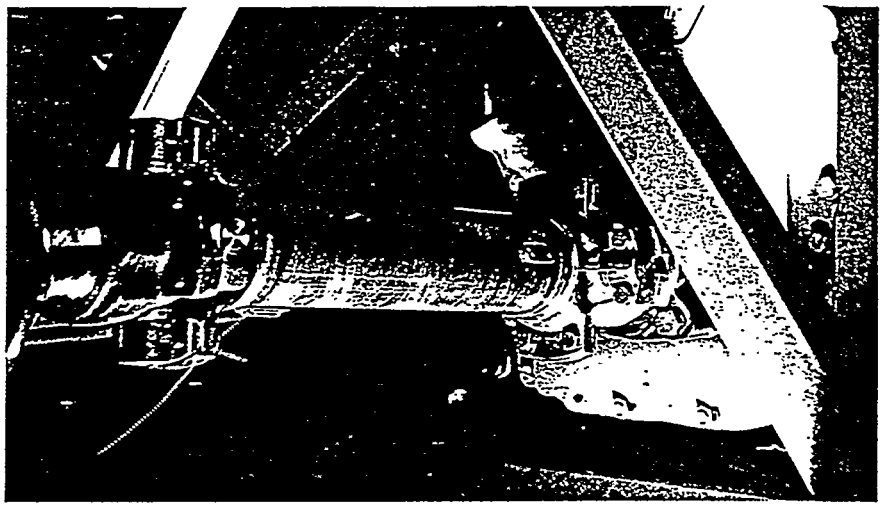

A high-powered drive train increases productivity.

Feed System
Two double-acting hydraulic cylinders attached to the rotary table provide more power. A coring feed regulator allows infinite adjustment of down-feed speed and unrestricted retract speed.

Pulldown Force	23,300 lbs
Retract Force	31,000 lbs
Rate of Feed	36.8 ft/min up, 45.3 ft/min down
Regenerative Retract	70 ft/min

Power Source
Both gas and diesel engines are available. The Ford 300 GFV 300 CID industrial power unit provides 126 intermittent gross horsepower and 246 ft/lbs of torque. The Cummins 4BT3.9 turbo-charged diesel engine provides 100 intermittent gross horsepower and 260 ft/lbs of torque.

Hydraulic System
All auxiliary functions are powered by a tandem vane pump mounted on the torque converter housing. Relief valves protect the circuits.

Maximum oil circulation and cooling is provided by a 50-

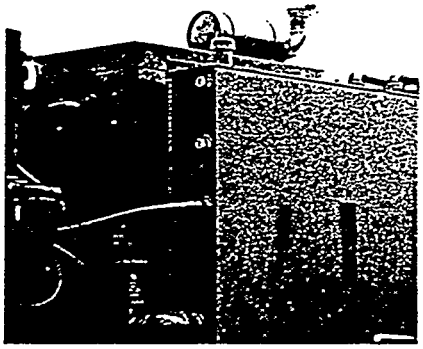

gallon hydraulic tank equipped with baffles and an oil cooler mounted in front of the power unit radiator.

Exclusive Safety Awareness
No other manufacturer actively promotes worker safety like Mobile Drill. Our exclusive "Lifeline*" emergency shutdown system, a 15" trip wire located at the right and left rear of the drill, shuts the engine off instantly.

A mast alarm alerts the operator that overhead obstructions and high-voltage electrical power lines must clearly be avoided when raising and lowering the mast.

Drill Dimensions

Length	[illegible]	26' 3"
Height	[illegible]	12' 11"
Width		8'

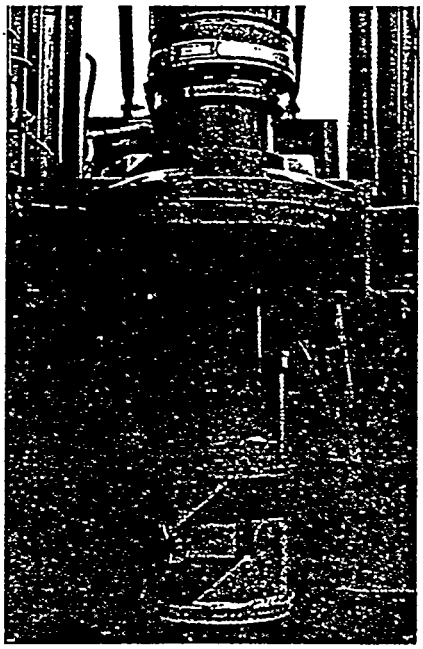

Mobile Drill's exclusive Rotary Drive System provides more power to drill deeper and last longer.

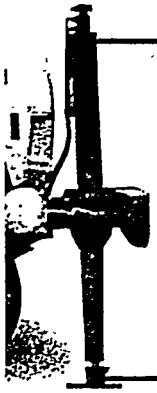

Truck Recommendations

Single Axle

Basic Drill	12' 6" body–102 C.A	33,000 GVWR
With water tank	14' 6" body – 126 C.A	33,000 GVWR

*Truck must have minimum 12,000 lb front axle and [illegible]

Tandem Axle

Basic Drill	16' 6" body – 126 C.A	34,000 GVWR

*Provides a 4' space behind truck cab and [illegible]

Available Options

Wireline Hoist
Infinite line speed range from 0-500 ft/min is provided by the wireline hoist. Hydraulically controlled with separate speed controls, the hoist's capacity is 1200 lbs. Using a 5/16" wire rope, the spooling capacity is 3500 ft.

Slidebase and Side Slide
Our hydraulic in-out slidebase is used for on- and off-hole movement. An advanced side slide provides a total of 12" travel. Together with the base plate, it permits increased flexibility.

Under Body Rod Clamp
A hydraulically controlled clamp retracts under the drill body when not in use. Jaw size capacities range from 1 5/16" to 5 7/8".

Manual and Hydraulic Rod Chucks
Both manual and hydraulic drill rod chucks accept jaws for AW, BW, NW, NQ, 2 7/8" and 3 1/2". The manual rod chuck mounts to the bottom of the rotary head spindle and allows a 2 15/16" diameter clearance hole. The hydraulic rod chuck, with hood bushing and three jaw set, mounts on top of the rotary head.

Automatic Pulldown
The pulldown is complete with jaws, kelly drive bushing and 2 7/8" O.D. 3-fluted kelly x 17 ft. long.

Hydraulic Breakout Wrench
The hydraulic cylinder mounted under the drill body is connected to a 36" pipe wrench by a 1/2" diameter cable.

Patented Gimbal Coupling
A heavy-duty, open-center universal auger coupling is used with Mobile Drill's exclusive in-hole sampling hammer and large diameter continuous sampling tools.

Redi-Rack™
The Mobile Drill designed Redi-Rack helps increase production time by putting a working supply of augers near the operator's station.

Masts
Mast sizes are available in 29 or 34 foot lengths. Crown Block provides for three wire lines plus a cathead.

Automatic Hammer
The SPT Automatic Hammer meets all requirements of ASTM-D-1586-84 Standard Penetration Test without weight or pressure on the drill string. 50 strokes/min.

Hydraulic Main Hoists
8,500 lb and 12,000 lb main hoists permit free-spooling capacity for kelly drilling. The B-61 HDX's design accommodates both sizes on the same rig.

A hydraulic control allows infinite line speed on the 8,500 lb from 0-68 ft/min in forward and 0-290 ft/min in reverse. The 12,000 lb allows 0-80 ft/min in forward and 0-325 in reverse. A failsafe brake is hydraulically released when switched to hoisting mode.

A 3,200 lb hydraulic auxiliary hoist is also available with a speed of 100 ft/min.

Safe-T-Driver® Hoist
Exclusive to Mobile Drill, this hydraulic, bi-directional hoist is motor-driven through an overrunning clutch for positive drive in hoisting the hammer—allowing a 30" free-fall. Safe-T-Driver includes a brake lever mounted on the control panel for safety purposes.

Hoisting capacity	900 lbs
Bare drum hoisting speed	910 ft/min

For more information on the B-61 HDX, call or write the Mobile Drilling Company.

Mobile Drilling Company, Inc.
3807 Madison Avenue
Indianapolis, IN 46227 USA
(800) 428-4475
(317) 787-6371
Telex 24 003 MODRL UR
Telefax (317) 784-5661

East Coast Supply Center
67 Benson Avenue
Trenton, NJ 08610 USA
(800) 543-9193
(609) 588-8877

West Coast Supply Center
5636 Corporate Avenue
Cypress, CA 90630 USA
(800) 447-3745
(714) 827-6460

Mobile Drill

Mobile Drilling Co., Inc., reserves the right to change designs, materials, specifications and prices without notice
B-61 HDX 04/90-10,000

6⁵/₈"(168mm) TRI-LOK™ Auger

The preferred size for 4"(102mm) monitoring/recovery well installation, sizes are identified by hollow stem auger I.D. Order a Lead Section and the following as needed: Cutter Head, Pilot Bit, extra Auger Sections and Center Rods.

Lead Section Assembly: 10"(254mm) O.D.

Description	lb(kg)	Part No.
Lead Assy: 5'-0"(1524mm), 1-5/8"(41mm) Hex, NW Rod	280(127.0)	61020-01
Lead Assy: 5'-0"(1524mm), 1-5/8"(41mm) Hex, NWML Rod	280(127.0)	61020-02
Lead Assy: 5'-0"(1524mm), 2"(51mm) Hex, NW Rod	285(129.3)	61020-03
Lead Assy: 5'-0"(1524mm), 2"(51mm) Hex, NWML Rod	285(129.3)	61020-04

Cutter Head: 11"(279mm) O.D.

Cutter Head: Blade Type HF (Hard Formation)	29(13.2)	61002-07
Cutter Head: FDD Type HF	32(14.5)	61001-14

Component Parts

	Description	lb(kg)	Part No.
1	Drive Cap: 1-5/8"(41mm) Hex	46(20.9)	150394
1	Drive Cap: 2"(51mm) Hex	49(22.2)	150401
2	Bolt, Rod	*	3100-0280
3	Nut, Hex	*	3122-0012
4	Lockbolt HF (2 Required, Repair Only)	*	150307
5	Handle	*	3781-0009
6	Socket	*	3782-0016
7	Adapter: NW Rod To Drive Cap	11(5.0)	180049-03
7	Adapter: NWML Rod To Drive Cap	11(5.0)	180054-04
8	Coupling: Pin (Repair Only)	15(6.8)	150388
9	Auger Section: 5'-0"(1524mm)	105(47.6)	150392
10	Rod, Center: 5'-0"(1524mm), NW	32(14.5)	001608
10	Rod, Center: 5'-0"(1524mm), NWML	35(15.9)	006278
11	Coupling: Box (Repair Only)	15(6.8)	150391
12	Plug: 1-5/8"(41mm) Hex To NW Box	50(22.7)	180036-15
12	Plug: 1-5/8"(41mm) Hex To NWML Box	50(22.7)	180036-14
13	Bolt, Plug	*	3130-0170
14	Cutter Head Body: Blade Type HF (4 Blades Req'd)	28(12.7)	150449
15	Cutter Blade: Carbide Insert (Hard Formation)	1(.5)	004303
16	Capscrew (1 Req'd Per Blade)	*	001293
17	Cutter Head Body: FDD w/Bit Blocks HF (4 Bits, 4 Blades Req'd)	28(12.7)	150552
18	Bit Block	*	216044
19	Bit, Chisel	*	150194-02
20	Shank, Pilot Bit: 1-5/8"(41mm) Hex	3(1.4)	004591
21	Bit, Pilot: (Hard Formation)	11(5.0)	004950
	Spare Key	*	150578
	Clean Out Tap (For Lock Bolt Hole)	*	150562

Lead Section Assembly

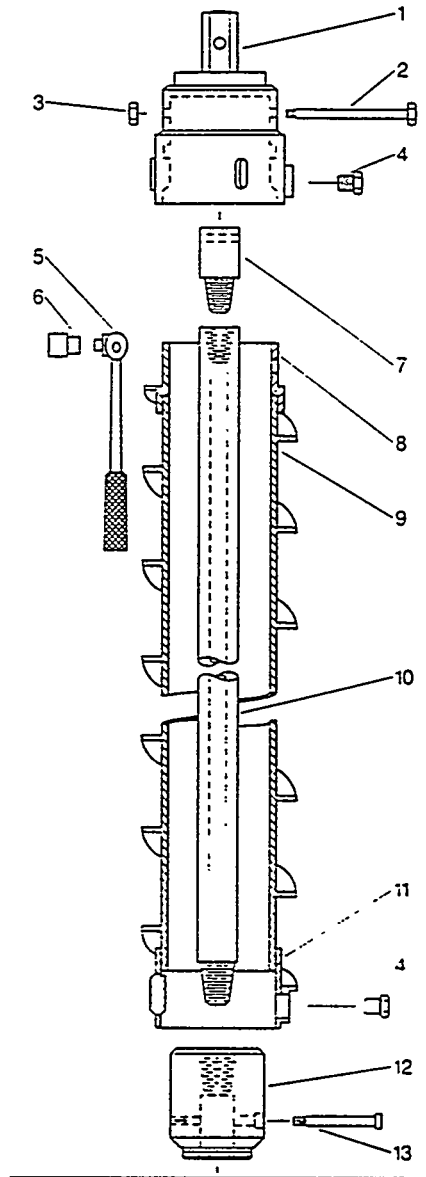

Cutter Heads

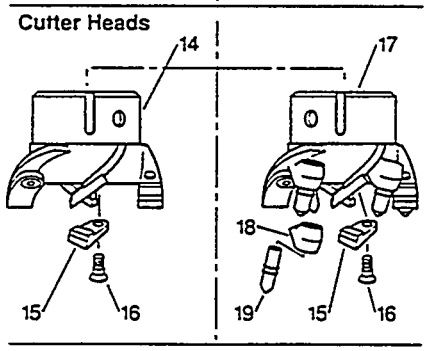

Pilot Bit

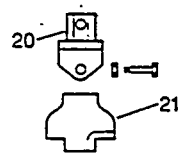

*Key: * Per [illegible] weights. Assembly [illegible] designates Mobile's exclusive Tungsten-Cobalt hardfacing

REV	DCN NO	INITIALS
G	8206241	ART

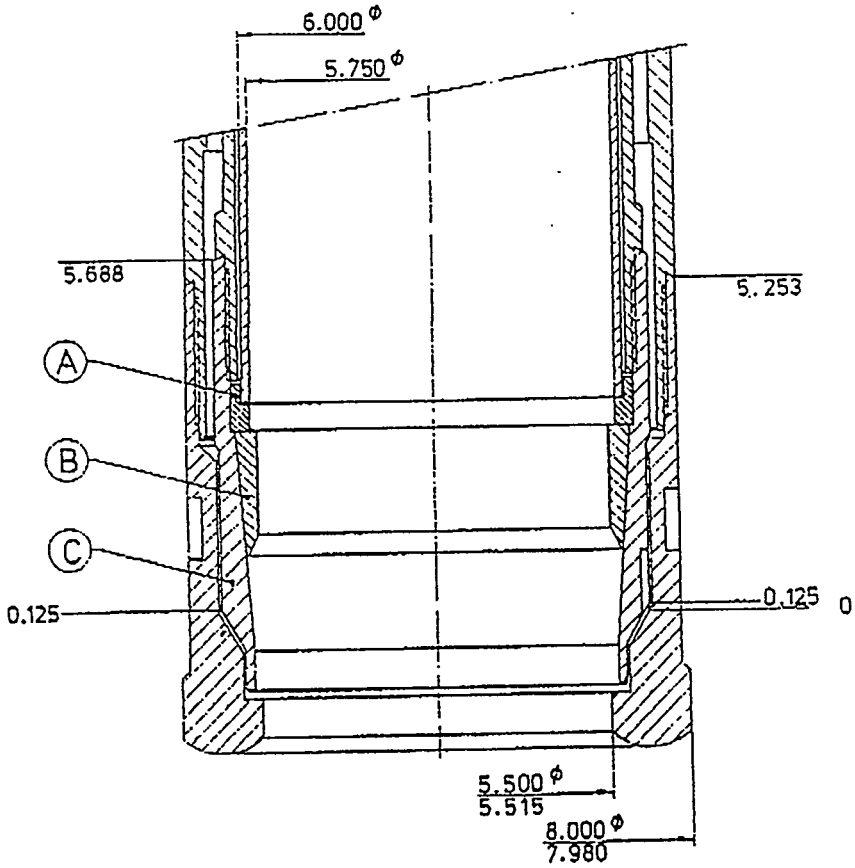

OPTIONAL EQUIPMENT:

A. CORE LIFTER RETAINING RING 25-357-021 S
B. CORE LIFTER SKIRTLESS HF 25-094-145 S
C. INNER TUBE SHOE PILOT BW 25-100-199 S

CBBL ASSY	LG	CBBL HEAD	OUTER TUBE	INNER TUBE	SPLIT I TUBE	ADAPTOR	I. T. SHOE	CORE LIFTER
25-022-013 S	5 FT	25-079-013 S	25-040-015 S	25-060-013 S	—	—	25-243-015 S	25-096-082 S
021 S	10	013 S	023 S	021 S	—	—	015 S	082 S
039 S	15	013 S	031 S	039 S	—	—	015 S	082 S
047 S	20	013 S	049 S	047 S	—	—	015 S	082 S
054 S	5	013 S	015 S	—	25-222-019 S	25-211-012 S	015 S	082 S
062 S	10	013 S	023 S	—	027 S	012 S	015 S	082 S
070 S	15	013 S	031 S	—	043 S	012 S	015 S	082 S
084 S	20	013 S	049 S	—	050 S	012 S	015 S	082 S
096 S	10	039 S	023 S	—	027 S	012 S	015 S	094-103 S
104 S	15	013 S	031 S	060-039 S	—	—	100-132 S	096-082 S

DO NOT SCALE DWG

UNLESS OTHERWISE INDICATED
(1) DIMENSIONS ARE IN INCHES
(2) TOLERANCES
DECIMAL .XX ± .02
.XXX ± .01
FRACTION ±1/32
ANGLES ±1°30'
(3) REMOVE ALL BURRS AND SHARP EDGES .005 MAX
(4) FILLET RADIUS .030 MAX
(5) SURFACE FINISH 125

HEAT TREATMENT

SURFACE TREATMENT

CHRISTENSEN
DIAMOND PRODUCTS, U.S.A.
P.O. BOX 267 / SALT LAKE CITY, UTAH 84110

TITLE
CORE BARREL ASSY
7.75 x 5.88

SIZE D
P/N 25-022-005 S
REV G
SCALE 1:1
SHT 2 OF 2

APPENDIX F

Safeguards and Security

(Provided by Westinghouse Hanford Company)

Westinghouse
Hanford Company

P.O. Box 1970 Richland, WA 99352

June 30, 1994

9454709

Chris H. Brevick, Project Manager
Projects Division
Kaiser Engineers Hanford Company
Post Office Box 888
Richland, Washington 99352

Dear Mr. Brevick:

SAFEGUARDS AND SECURITY INPUT TO THE ENGINEERING STUDY FOR THE INSTALLATION OF NEW RISERS IN SINGLE SHELL TANKS - ER5511

Please find attached the input to the new riser engineering study. The Risk Assessment and Evaluation group of the Security Applications Center reviewed this document and the engineering alternatives presented within. This review qualitatively estimates the impacts of these alternatives on the security risk of the Tank Farms integrated protection system and provides our conclusions and recommendations for your consideration.

Additionally the study was forwarded to the Westinghouse Hanford Company Security Organization's Northern Area Security Operations, which directly support Tank Farms operations. Comments were received and no findings were indicated. I recommend you route the final approved engineering study through Fritz O. Strankman, Manager, Security prior to implementation.

It was a pleasure assisting you in this matter. If you have further questions or requirements, please feel free to contact myself on 376-7091 or Jay Tilden on 376-0860.

Very truly yours,

C. J. Udell, Manager
Risk Assessment and Evaluation

ayj

Attachment

54-7600-075

Hanford Operations and Engineering Contractor for the US Department of Energy

SAFEGUARDS AND SECURITY COMMENTS
FOR

ENGINEERING STUDY

INSTALLATION OF NEW RISERS IN SINGLE SHELL TANKS

WORK ORDER ER5511

Prepared by: R. M. Marusich
J. A. Tilden
C. J. Udell

1.0 INTRODUCTION

The engineering study *Installation of New Risers in Single Shell Tanks*, dated May 1994 (Issue B), was provided to the Risk Assessment and Evaluation group of the Security Applications Center (SAC), Westinghouse Hanford Company (WHC), by the project manager, C. H. Brevick, Project Manager, of ICF Kaiser Hanford Company, Richland, Washington. The purpose of the review was to identify the potential security impacts of the various engineering methods on the existing Tank Farms integrated protection system and the effects of those impacts, if any, on the risk rating as provided in the *Risk Evaluation of the Hanford Tank Farms, Final Technical Report* (WHC 1994). Additionally, the SAC coordinated review and comments from representatives of the Northern Area Security Operations group of the Security organization of WHC Safeguards and Security.

1.1 SCOPE

The scope of the review was to conduct a qualitative evaluation utilizing expert judgement to estimate the impacts for each alternative on the existing integrated protection systems at the farms of concern. Safety Analysis and Engineering was consulted concerning any increased adverse impacts to the public and employee health and safety if a postulated radiological sabotage event occurred during the new riser installation. Consideration of the potential impacts of radiological sabotage is required by DOE Notice 5630.1A (DOE 1993a). The conclusions and recommendations were based on the best available information. The baseline documents are as follows:

Risk Evaluation of the Hanford Tank Farms, Final Technical Report, WHC94-00004 (U), April 1994, specifically, Appendix A, Radiological Consequence Analysis, and Appendix D, Protection Effectiveness Details.

Installation of New Risers in Single Shell Tanks, WHC-SD-WM-ES-299, Rev. 0, May 1994, (Issue B) 90% draft.

Security Manual, WHC-CM-4-33, specifically Section 2.10, Physical Protection of Property and Facilities, February 1989; Section 2.15, Limited and Protected Area Construction Security Access, May 1992, and Section 5.1, Site Safeguards and Security Program Planning, September 1993.

1.2 ASSUMPTIONS

The major assumptions considered during this review are provided. The *Risk Evaluation of the Hanford Tank Farms* (WHC 1994) provides additional assumptions that were used to develop base-case risk and consequences to the employee/public health and safety.

- The tanks of concern will have the new risers installed.

- The threat spectrum as provided in the *Design Basis Threat Policy for Department of Energy Programs and Facilities* (DOE 1993b) will be applied as directed in the current guidance. Current threat assessments were considered, as appropriate (DOE 1994).

- The current waste characterization data as described in Appendix A of the risk evaluation report is valid.

- Adverse impacts to the employee and public health and safety are defined in the *Format and Content Guide for Site Safeguards and Security Plans* (DOE 1993c), based on Title 10 Code of Federal Regulations, Part 100, as supplemented by DOE Order 6430.1A, *General Design Criteria* (DOE 1989).

2.0 IMPACTS OF RISER INSTALLATION ALTERNATIVES

2.1 REVIEW OF INSTALLATION ALTERNATIVES

The five riser installation alternatives were reviewed. These approaches fundamentally employ two methods with several variants of technique. The two approaches are either Excavation (Alternative 1) - removal of the earth overburden to allow for a large workspace on the dome or Caisson/Shoring (Alternatives 2 to 5) - removal of much less earth overburden and use of walls to retain the workspace.

2.2 IMPACTS OF RISER INSTALLATION ALTERNATIVES

The following data summarizes the estimated potential impacts to the Tank Farms Integrated Protection System as presented in the *Risk Evaluation of the Hanford Tank Farms* (WHC 1994), Sections 4.0, 5.0, and Appendix D. Any of the riser installation alternatives will provide a window of opportunity, which would decrease the estimated adversary task times for the postulated scenario. This window occurs specifically when the dome has been penetrated and the new riser is either being fabricated or set in grout (on the dome) at the bottom of the caisson or excavated area.

2.2.1 Excavation of Soil Cover and Slope remaining Overburden (Alternative 1)

This alternative has the largest potential impact to the protection system, specifically the physical structure, and may increase the potential consequences to the employee or public health and safety.

The removal of the earth overburden and the exposure of the tank dome decreases the amount of protection provided by the physical structure. Calculations by Safety Analysis and Engineering were based on two cases: a vehicle driven threat, with a range of explosive amounts; and possible insertion of the explosive amounts into the tanks. The energy from the explosives was applied to the overburden, the tank dome, and the waste material within the tank. If the overburden is removed and the vehicle placed

either partially or totally in the excavated area, then more energy could be applied to the dome and waste material and less used on the elimination of the overburden. Another factor is that the distance from the explosives and the dome/waste would be reduced.

The application of more energy on the dome and waste has a cascade effect. This potential increase in energy available not only increases the damage to the physical structure, but it may also increase the amount of respirable material created and would probably increase the amount of material released to the environment. This may result in higher dose exposures to the onsite and offsite receptors. Details of the original release estimates, on which this is based, can be found in Appendices A and B of the *Risk Evaluation of the Hanford Tank Farms* (WHC 1994).

The explosive insertion case was considered. The overburden was a relatively minor physical component and the additional energy applied to the dome and the waste would have little or no effect on the current estimated consequences.

2.2.2 Caisson or Shoring with variants (Alternatives 2 to 5)

These alternatives have minor potential impacts to the protection system. They do not significantly change the physical structure, and therefore, do not increase the potential consequences to the public health and safety.

The use of the 8-ft diameter caisson or other shoring device does not remove enough of the overburden to significantly increase the amount of energy to be applied to the tank dome and waste. The drilling, abrasive water jet, and straddle crane alternatives appear to have an equal or less impact on the physical structure as the 8-ft diameter caisson. Because no additional energy is available for application to the dome or waste, the resulting release potential remains the same as in Appendices A and B of the *Risk Evaluation of the Hanford Tank Farms* (WHC 1994).

3.0 CONCLUSIONS

- The Caisson and Shoring (Alternatives 2 to 5) approach would require no further evaluation by the Risk Assessment and Evaluation staff. This approach may decrease the adversaries task times, especially if the adversary is the insider. However, the current estimated release consequences would be similar, if not unchanged, and are within acceptable security risk levels.

- The Excavation Alternative could increase the radiological release and subsequent dose exposures based on the postulated adversary scenario. Certain tanks of concern would require a re-evaluation and appropriate countermeasures.

4.0 RECOMMENDATIONS

- For the Caisson and Shoring Alternatives, measures such as heavy steel plate and lead shot shielding (per the engineering study) over the new riser opening, locked/closed temporary flanges, and locked (during back shift) safety/security fence around the construction area should be sufficient measures at the tanks of concern to maintain acceptable protection system effectiveness.

- For the Excavation Alternative, approximately seven single shell tanks will require re-evaluation of the radiological release estimates and consequences. An estimate for this re-evaluation is approximately $ 10k.

- Any tanks exceeding the acceptable release limits and subsequent consequence values will require additional protective countermeasures against the postulated vehicle threat. An earthen berm of substantial size, or concrete highway barricades, commonly known as "Jersey Barriers" would be required around the construction area to prevent any truck access to the excavated area. A safety or security type fence should also be deployed to keep out unauthorized personnel. Signs restricting vehicular traffic should be posted.

- For all alternatives, the Northern Area Security Operations Security Representatives for the Tank Farms must be notified prior to initiation of work. Security awareness should be briefed to the construction site workers, the involved operations personnel, and the security/Patrol personnel supporting Tank Farms.

- The final conceptual design should be routed for approval through the WHC Security Applications Center and Security Organization.

5.0 REFERENCES

DOE, 1989, DOE Order 6430.1A, *General Design Criteria*, U.S. Department of Energy, Washington, D.C.

DOE, 1993a, DOE Notice 5630.1A, *Protection of Departmental Facilities Against Radiological and Toxicological Sabotage*, U.S. Department of Energy, Washington, D.C.

DOE, 1993b, *Design Basis Threat Policy for Department of Energy Programs and Facilities (U)*, Office of Safeguards and Security, U.S. Department of Energy, Washington, D.C.

DOE, 1993c, *Format and Content Guide for Site Safeguards and Security Plans*, Office of Safeguards and Security, U.S. Department of Energy, Washington, D.C.

DOE, 1994, *Hanford Waste Tank Insider Threat Assessment*, Threat Assessment Division, Office of Nonproliferation and National Security, U.S. Department of Energy, Washington, D.C.

WHC, 1993, Volume 1 of the *Hanford Site Tank Farm Facilities Interim Safety Basis*, WHC-SD-WM-ISB-001, Rev. 0, Vol 1, Westinghouse Hanford Company, Richland, WA.

WHC, 1994, *Risk Evaluation of the Hanford Tank Farms, Final Technical Report (U)*, WHC94-00004, Westinghouse Hanford Company, Richland, WA.