*** RMIS View/Print Document Cover Sheet ***

This document was retrieved from the Documentation and Records Management (DRM) ISEARCH System. It is intended for Information only and may not be the most recent or updated version. Contact a Document Service Center (see Hanford Info for locations) if you need additional retrieval information.

Accession #: D195063903

Document #: SD-WM-DA-209

Title/Desc:
STRUCTURAL QUALIFICATION OF THE MIT FOR INSTALLATION IN DST & 100 SERIES SST

Pages: 108

DEC 01 1995

ENGINEERING DATA TRANSMITTAL

1. EDT 604150

2. To: (Receiving Organization) Plant Config./Drawings/Test Evaluation	3. From: (Originating Organization) Mitigation System Integration	4. Related EDT No.: N/A
5. Proj./Prog./Dept./Div.: Waste Management	6. Cog. Engr.: J. P. Strehlow	7. Purchase Order No.: N/A
8. Originator Remarks: Approval/Release		9. Equip./Component No.: N/A
		10. System/Bldg./Facility: N/A
11. Receiver Remarks:		12. Major Assm. Dwg. No.: H-2-85141
		13. Permit/Permit Application No.: N/A
		14. Required Response Date:

15. DATA TRANSMITTED

(A) Item No.	(B) Document/Drawing No.	(C) Sheet No.	(D) Rev. No.	(E) Title or Description of Data Transmitted	(F) Approval Designator	(G) Reason for Transmittal	(H) Originator Disposition	(I) Receiver Disposition
1	WHC-SD-WM-DA-209		0	Structural Qualification of the Multifunctional Instrument Tree for Installation in Double-Shell and 100-Series Single-Shell Tanks	Y SQ	1	1	

16. KEY

Approval Designator (F)	Reason for Transmittal (G)	Disposition (H) & (I)
E, S, Q, D or N/A (see WHC-CM-3-5, Sec.12.7)	1. Approval 2. Release 3. Information 4. Review 5. Post-Review 6. Dist. (Receipt Acknow. Required)	1. Approved 2. Approved w/comment 3. Disapproved w/comment 4. Reviewed no/comment 5. Reviewed w/comment 6. Receipt acknowledged

17. SIGNATURE/DISTRIBUTION (See Approval Designator for required signatures)

(G) Reason	(H) Disp.	(J) Name	(K) Signature	(L) Date	(M) MSIN	(J) Name	(K) Signature	(L) Date	(M) MSIN	(G) Reason	(H) Disp.
1	1	Cog.Eng. J. P. Strehlow		11/21/95	H5-68						
1	1	Cog. Mgr. W. W. Jenkins			S2-24						
1	1	QA J. J. Verderber		11/27/95	S1-57						
1	1	Safety L. S. Krogrud			S7-08						
		Env.									
1	1	M. F. Erhart		11/21/95	R1-51						

18.	19.	20.	21. DOE APPROVAL (if required) Ctrl. No.
J. P. Strehlow 11/21/95 Signature of EDT Originator / Date	D. D. Larson 11/27/95 Authorized Representative for Receiving Organization / Date	For W. W. Jenkins 11-27-95 Cognizant Manager / Date	☐ Approved ☐ Approved w/comments ☐ Disapproved w/comments

BD-7400-172-2 (04/96) GEF097

BD-7400-172-1 (07/91)

Structural Qualification of the Multifunctional Instrument Tree for Installation in Double-Shell and 100-Series Single-Shell Tanks

J. P. Strehlow
Westinghouse Hanford Company, Richland, WA 99352
U.S. Department of Energy Contract DE-AC06-87RL10930

EDT/ECN: 604150 UC: 2070
Org Code: 74750 Charge Code: ~~N166~~ N2166 JPS 12/1/95
B&R Code: EW3120072 Total Pages: 105

Key Words: Multifunctional, Structural, Instrument, Tree, MIT, Analysis, Qualification

Abstract: This document provides the technical basis and methodology for qualifying the multifunctional instrument tree (MIT) structure for installation in double-shell and 100-series single-shell tanks. Structural qualification for MIT installations in specific tanks are also contained in this document.

TRADEMARK DISCLAIMER. Reference herein to any specific commercial product, process, or service by trade name, trademark, manufacturer, or otherwise, does not necessarily constitute or imply its endorsement, recommendation, or favoring by the United States Government or any agency thereof or its contractors or subcontractors.

Printed in the United States of America. To obtain copies of this document, contact: WHC/BCS Document Control Services, P.O. Box 1970, Mailstop H6-08, Richland WA 99352, Phone (509) 372-2420; Fax (509) 376-4989.

OFFICIAL RELEASE BY WHC (20)
DATE DEC 01 1995
Sta. 21

Janis Bishop 12-1-95
Release Approval Date

Release Stamp

Approved for Public Release

WHC-SD-WM-DA-209, Rev. 0

STRUCTURAL QUALIFICATION OF THE MULTIFUNCTIONAL INSTRUMENT TREE FOR INSTALLATION IN DOUBLE-SHELL AND 100-SERIES SINGLE-SHELL TANKS

November 1995

Prepared by: J. P. Strehlow
Principal Engineer
Mitigation Systems Integration

Contributions by: Advent Engineering Services, Inc.

Westinghouse Hanford Company
Hanford Operations and Engineering Contractor
for the
U.S. Department of Energy

INDEPENDENT REVIEW

Document Reviewed Structural Qualification of the Multi-Functional Instrumentation Tree for Installation in Double-Shell and Single-Shell Tanks

Author J. P. Strehlow Report No. WHC-SD-WM-DA-209 EDT No. 604150

The subject document has been reviewed by the undersigned. The reviewer reviewed and verified the following items as applicable [EP.4.1].

- Engineering Specification
- Design Input
- Basic Assumption
- Approach/Design Methodology
- Related Information
- Conclusion/Result Interpretation

M Z Elsaad
Reviewer

11/21/95
Date

1.0 INTRODUCTION

This document provides the technical basis and methodology for qualifying the multifunctional instrument tree (MIT) for installation in tanks other than the one for which it was originally designed, tank 241SY101. The generic evaluation contained in Appendix A of this report, is a parametric structural analysis that establishes limiting parameters or requirements that, if satisfied, will qualify the MIT structure for installation in a specific tank. These qualification requirements are grouped in the following areas.

- Tank and riser configuration
- MIT configuration
- MIT installation
- Operating Temperatures
- Waste properties
- Waste rollover load
- Mixing pump circulation load
- Seismic load
- Hydrogen Burn load
- Installation/removal accident drop

2.0 METHOD FOR STRUCTURAL QUALIFICATION

Qualification of the MIT structure for installation in a specific tank is accomplished by verifying and documenting compliance with the requirements established by the parametric structural analysis. A checklist is provided in Attachment 1 to assist the cognizant engineer with this structural qualification. The Tables and Figures identified in this checklist can be found in the generic evaluation contained in Appendix A. Any requirement checked "no" on this checklist invalidates the structural qualification of the MIT installation, unless further engineering evaluations are performed to resolve the discrepancy. The completed checklist along with any supporting evaluations or analyses should then be documented by incorporating them in this report as an Appendix.

In addition to the completion of the structural qualification checklist, the cognizant tank engineer should review the current tank dome load status to ensure that sufficient dome load margin is available for the MIT installation. The total load that the MIT will be impose on the tank dome during either installation of removal will be the weight of the MIT plus the weight of any installation equipment such as the crane. Following installation, the cognizant tank engineer should update the dome load inventory log to include the installed weight of the MIT (925 lbf) plus the weight of any support equipment for the MIT installation.

Structural qualification of the MIT for a specific tank installation is based on the current conditions in that tank. If these conditions change, the structural qualification must be re-evaluated to ensure it is still valid. For example, if future conditions call for the installation of a mixer pump, further evaluations would be required to qualify the MIT installation for the additional mixer pump circulation loads. Other factors that could affect the structural qualification of the MIT are changes in the depth, specific gravity, or viscosity of the waste, changes in seismic criteria for the MIT,

an increase in the temperature for either the vapor space gases or the waste, or an increase in the waste rollover velocity.

3.0 QUALIFICATION REQUIREMENTS

Tank and riser configuration, MIT configuration, and MIT installation qualification requirements deal with the ability of the tank and riser to provided adequate support for the MIT and for the MIT structure to withstand the applicable loads without exceeding specified stress limits or failing due to fatigue.

Operating temperature qualification requirements are associated with the allowable stress values for the materials used to fabricate the MIT. Higher temperatures could reduce the allowable stress for these materials, thereby reducing the ability of the MIT to withstand the applicable design loads.

Waste property qualification requirements are prerequisites for the qualification of other applicable design loads such as the waste rollover load, the mixing pump circulation load, and the seismic loads.

The qualification requirements specified for design loads are essentially the same as the loads that were applied in the structural qualification of the MITs installed in tank SY101. The qualification requirements for the waste rollover load and the mixing pump circulation load provide an option; either demonstrate that the actual waste velocity profiles and viscosities for a specific installation are enveloped by those applied in the SY101 structural qualification or demonstrate that the maximum bending moment in the MIT is less than the qualified bending moment for the SY101 MIT installations. Similarly, the qualification requirements for the seismic loads require the applicable response spectra for the MIT to be enveloped by or be equivalent to the response spectra applied in the structural qualification of the SY101 MIT installations.

The hydrogen burn load qualification requirements are specified to ensure that the MIT will not be ejected from the tank during a hypothetical hydrogen burn inside the tank dome vapor space. The specified pressure of 70 lbf/in^2 (gauge) is the same pressure that was applied for the hydrogen burn for the structural qualification of the MITs installed in tank SY101.

Qualification requirements for the installation/removal accident drop are specified to prevent the MIT from perforating the bottom tank liner and causing it to leak if the MIT were dropped during either installation or removal. To protect the primary tank liner, the impact velocity of the MIT must be kept below a critical value. Drag forces on the MIT as it moves through the waste are capable of reducing the impact velocity below this critical value providing the specific gravity and waste depth meet the specified qualification requirements. If these requirements are not met, an impact limiter should be installed to limit the effect of a possible drop, unless a more detailed drop analysis can show otherwise.

ATTACHMENT 1

Checklist for Structural Qualification of MIT for a Specific Installation

CHECK LIST FOR STRUCTURAL QUALIFICATION OF MIT FOR A SPECIFIC INSTALLATION

Tank Number 241- - _____ Installation Drawing _____

Riser Number _____ MIT Reference Number _____

(Note: Any requirement checked "no" invalidates the structural acceptance of the MIT installation, unless further engineering evaluations are performed to resolve the discrepancy)

Criteria Item	Requirement	Satisfied			Actual Value/Status	Reference/Comment
		Yes	No	N/A		
Tank and Riser Configuration						
Tank Diameter	75 ft					
Radial Distance from Center of Tank to MIT Location	≥ 28 ft					
Distance from Tank Floor to Bottom Lip of Riser	≤ 42.5 ft					
Length of Riser	≤ 14 ft					
Unsupported Length of Riser Above Soil Surface	≤ 2.5 ft					
Dome Thickness at MIT Location	≥ 15 in.					
Dome Concrete Strength	≥ 4,500 lbf/in^2					
Reinforcing Bar Size at MIT Location	≥ #6					
Reinforcing Bar Center to Center Spacing at MIT Location (Top and Bottom, Both Directions)	≤ 10 in.					
Reinforcing Bar Yield Strength	≥ 60,000 lbf/in^2					
Riser Pipe Size and Schedule	4 in. Sch 40					
Riser Material Yield Strength	≥ 30,000 lbf/in^2					
MIT Configuration						
Total MIT Weight	≤ 925 lbf					
Probe Head Weight	≤ 400 lbf					
Nominal Outside Diameter of Outer Tube	3.5 in.					
Nominal Wall Thickness of Outer Tube	0.188 in.					

CHECK LIST FOR STRUCTURAL QUALIFICATION OF MIT FOR A SPECIFIC INSTALLATION

Tank Number 241- - _____ Installation Drawing _____

Riser Number _____ MIT Reference Number _____

Criteria Item	Requirement	Satisfied			Actual Value/Status	Reference/Comment
		Yes	No	N/A		
Outer Tube Material Type	Seamless, Stainless Steel Tube					
Outer Tube Material Yield Strength	≥ 30,000 lbf/in^2					
Sampling Port Cutout Circumferential Dimension	≤ 0.6 in.					
Thermocouple Cutout Circumferential Dimension or Chord Dimension	≤ 1.28 in. ≤ 1.25 in.					
Wall Thickness Removed for Circumferential Weld Backing Ring or Partial Circumferential Weld Flaw Size (Length x Depth) or Full Circumferential Weld Flaw Size (Depth)	≤ 0.023 in. ≤ 0.625 x ≤ 0.04 in. ≤ 0.032 in.					
MIT Installation						
Uniform Weight of MIT Below the Riser Flange Connections	≤ 525 lbf					
Height of Probe Head Center of Gravity Above Riser Flange Connection	≤ 4 ft					
Top Edge of Thermocouple #22 Cutout to Bottom Lip of Riser	≥ 73 in.					
Operating Temperatures						
Gas Temperature in Vapor Space	≤ 110 °F					
Waste Temperature	≤ 140 °F					
Waste Properties						
Waste Depth	250 to 420 in.					
Specific Gravity	≤ 1.7					
Viscosity	≤ 25,000 cP					

CHECK LIST FOR STRUCTURAL QUALIFICATION OF MIT FOR A SPECIFIC INSTALLATION

Tank Number 241- - _____ Installation Drawing _____

Riser Number _____ MIT Reference Number _____

Criteria Item	Requirement	Satisfied			Actual Value/Status	Reference/Comment
		Yes	No	N/A		
Waste Spillover Load						
Maximum Waste Velocity over Top 10 Feet of Waste (Waste Velocity Below 10 Foot Depth Effectively Zero) or Bending Moment in MIT Outer Tube at Bottom Lip of Riser.	Velocity Enveloped by Applicable Value from Figure 3.6.2-1 and Figure 3.6.2-2 ≤ 13,487 lb-in					
Mixing Pump Circulation Load						
Velocity Profile and Mixed Waste Velocity at MIT Location or Bending Moment in MIT at Bottom Lip or Riser	Velocity Profile Enveloped by Figure 3.6.3-1 and Viscosity ≤ 500 CP ≤ 17,686 in/in					
Strain Amplitude (1/2 of Strain Range) in MIT Outer Tube at Bottom Lip of Riser for Vibration Modes 1 and 2 or Show that Vortex Shedding is not Present.	≤ 189 μ in/in Mode 1 ≤ 139 μ in/in Mode 2 Vibration Mode 2 Applicable only if Flow Velocity at MIT Location Exceeds Mode 2 "Lock-In" Velocity of 1.9 ft/s Verify Through In-Situ Tests					
Seismic Load						
Seismic Response Spectra for Structure Inertial Load	Enveloped or Equivalent to the Response Spectra in SDC-4.1, Rev. 12, for a 0.2 g Earthquake at 5% Critical Damping					
Seismic Response Spectra for Waste Sloshing Load	Enveloped or Equivalent to the Response Spectra in SDC-4.1, Rev. 12, for a 0.2 g Earthquake at 0.5%Critical Damping (scaled from spectral values for 2% critical damping)					
Internal Waste Load						
Hydrogen Burn Peak Pressure (Gauge)	≤ 70 lbf/in^2					

CHECK LIST FOR STRUCTURAL QUALIFICATION OF MIT FOR A SPECIFIC INSTALLATION

Tank Number 241- - _____ Installation Drawing _____

Riser Number _____ MIT Reference Number _____

Criteria Item	Requirement	Satisfied			Actual Value/Status	Reference/Comment
		Yes	No	N/A		
Tensile Load Capacity of Bolting that Connects MIT to Riser	≥ 1,760 lbf					
Installation Acceptance Item						
Waste Depth and Viscosity or Use Impact Limiter for MIT Installation	Record Minimum Specific Gravity ≥ Minimum Required Value from Figure 4.2-1 for Actual Waste Depth Impact Limiter Capable of Absorbing Drop Energy					

Based on the above checklist results, the indicated MIT installation is structurally qualified.

Cognizant Engineer _____ Date _____

Cognizant Manager _____ Date _____

Independent Review _____ Date _____

NOTES:

REFERENCES:

APPENDIX A

Generic Evaluation of Tank 241SY101 MIT Design for Installation in Other Tanks

CALCULATION COVER SHEET
WHC-SD-WM-DA-209, Rev. 0

PROJECT	JOB NO.	FILE NO.
WHC- Evaluation of Tank 241SY101 MIT Design for Other Tanks	95010	95010.1.1
CLIENT	**CLIENT CALC. NO.**	**NO. OF SHEETS**
Westinghouse Hanford Company	--	62

SUBJECT

Comparison of Tank/Waste Parameters

PURPOSE

See Section 1.0

SOURCES OF DATA & REFERENCES

See Section 6.0

PURPOSE FOR REVISION

To modify limits on MIT length below the riser lip, and relax restrictions on location of gas sampling port with respect to bottom of riser lip.

Originators	Reviewers	Design Verified by	Date	Approved By	Date
J.P. Day	J.P. Day	R. BALIGA	11/15/95	R. BALIGA	11/15/95
T.N. Watts	J.S. Steinman				
	T.N. Watts	Revision No. 2	Project Distribution		
	R. Baliga		Project File		
		Supersedes Calc. No. Rev. No. 1	Westinghouse Hanford Company		

51\95010\0\1-1calc.cvr

Project	WHC - Evaluation of Tank 241SY101 MIT Design for Other Tanks	Prepared By:	Date 10/23/95
Subject	Comparison of Tank/Waste Design Parameters	Reviewed By:	Date 10/24/95
System	Multifunction Instrument Tree (MIT)	Job No. 95010	File No. 95010.1.1
Client Calc. No.		Sheet No. i	Rev. No. 1

TABLE OF CONTENTS

Sheet

1.0 INTRODUCTION 1-1

2.0 SCOPE 2-1

3.0 DESIGN PARAMETERS 3-1
- 3.1 TANK AND RISER CONFIGURATION 3-2
- 3.2 MIT INSTALLATION (RISER LOCATIONS and DIMENSION) 3-2
- 3.3 MIT CONFIGURATION 3-3
- 3.4 WASTE PARAMETERS 3-4
  - 3.4.1 Specific Gravity 3-4
  - 3.4.2 Viscosity 3-4
  - 3.4.3 Waste Level 3-4
  - 3.4.4 Layers of Different Waste Materials 3-4
- 3.5 WASTE and GAS VOLUME TEMPERATURE 3-6
- 3.6 APPLICABLE DESIGN LOADS 3-6
  - 3.6.1 Deadweight (D) 3-6
  - 3.6.2 Waste Rollover (WRO) 3-7
  - 3.6.3 Mixing Pump Circulation (MPC) 3-9
  - 3.6.4 Design Basis Earthquake (DBE) 3-10
  - 3.6.5 Waste Sloshing (SL) 3-11

4.0 BEYOND DESIGN BASIS CONSIDERATIONS 4-1
- 4.1 HYDROGEN BURN EVENT (H) 4-1
- 4.2 DROP ANALYSIS 4-1

5.0 CONCLUSIONS 5-1

6.0 REFERENCES 6-1

ADVENT ENGINEERING SERVICES, INC.

Calculation Sheet

Project	WHC - Evaluation of Tank 241SY101 MIT Design for Other Tanks	Prepared By:	Date 10/18/95
Subject	Comparison of Tank/Waste Design Parameters	Reviewed By:	Date 10/19/95
System	Multifunction Instrument Tree (MIT)	Job No. 95010	File No. 95010.1.1
Client Calc. No.		Sheet No. 1-1	Rev. No. 0

1.0 INTRODUCTION

The Multifunction Instrument Tree (MIT) design has been or is proposed to be used for tanks other than the 241SY101 (SY-101) double-shell tank. Some of the waste parameters for some of the other tanks may be different than those for the SY-101 tank. In addition, the current qualification for the design of the MIT in tank SY-101 (ADVENT 1994) is based on specific structural and strength qualities which must be maintained to ensure structural adequacy when subjected to the loads for the other tanks. This study is performed to identify limiting parameters (or applicability requirements), associated with the waste and the MIT structure, based on the SY-101 MIT design and drop analysis, which will allow a cognizant engineer to determine the acceptability of the existing MIT design for use in other tanks.

ADVENT ENGINEERING SERVICES, INC.

Calculation Sheet

Project	WHC - Evaluation of Tank 241SY101 MIT Design for Other Tanks	Prepared By: [signature]	Date 10/18/95
Subject	Comparison of Tank/Waste Design Parameters	Reviewed By: [signature]	Date 10/19/95
System	Multifunction Instrument Tree (MIT)	Job No. 95010	File No. 95010.1.1
Client Calc. No.		Sheet No. 2-1	Rev. No. 0

2.0 SCOPE

The scope of the study includes a review of the existing MIT design, the associated waste and structural parameters, and the drop analysis provided in ADVENT 1994. Although not explicitly addressed herein, it is anticipated that the results of this study will provide the necessary applicability requirements which will allow a cognizant engineer to determine the acceptability of the existing MIT design for use in the 100-series single-shell and double-shell tanks, including the following:

TANK NO.	TANK TYPE
SY-103	Double-Shell
AW-101	Double-Shell
AN-103	Double-Shell
AN-104	Double-Shell
AN-105	Double-Shell
A-101	Single-Shell

Calculation Sheet

Project	WHC - Evaluation of Tank 241SY101 MIT Design for Other Tanks	Prepared By:	Date 10/18/95
Subject	Comparison of Tank/Waste Design Parameters	Reviewed By:	Date 10/19/95
System	Multifunction Instrument Tree (MIT)	Job No. 95010	File No. 95010.1.1
Client Calc. No.		Sheet No. 3-1	Rev. No. 0

3.0 DESIGN PARAMETERS

The design parameters important to this study include the following:

- Tank and riser configurations
- MIT installation (riser locations and vertical position in riser)
- MIT configuration
- Waste parameters
  - Specific gravity
  - Viscosity
  - Waste level
  - Layers of different materials
- Temperature of the gas volume above the waste near the top of the tank.
- Applicable loads
  - Deadweight loads
  - Waste Rollover loads
  - Mixing Pump Circulation loads
  - Design Basis Earthquake
  - Sloshing loads
  - Hydrogen Burn Event Loads

ADVENT ENGINEERING SERVICES, INC.

Project: WHC - Evaluation of Tank 241SY101 MIT Design for Other Tanks	Prepared By: [illegible]	Date: 11/14/95	
Subject: Comparison of Tank/Waste Design Parameters	Reviewed By: R. BALIGA	Date: 11/15/95	
System: Multifunction Instrument Tree (MIT)	Job No.: 95010	File No.: 95010.1.1	
Client Calc. No.	Sheet No.: 5-2	Rev. No.: 2	

3.1 TANK AND RISER CONFIGURATION

The tank dimensions that affect the MIT design are the inside diameter of the primary liner and the height of the primary liner (or distance of the riser bottom lip above the tank floor) and the dome characteristics that affect the structural capacity of the dome in the vicinity of the MIT location.

Based on the SY-101 MIT design, the tank and riser configuration is acceptable if the following applicability requirements are satisfied:

- Tank diameter = 75 ft
- Distance of riser bottom lip above tank floor ≤ 42.5 ft
- Length of riser ≤ 14 ft
- Unsupported length of riser above the soil surface ≤ 2.5 ft
- MIT location dome thickness ≥ 15 in
- MIT location dome reinforcement ≥ #6 at 10 in. on center (top and bottom, both directions)
- Rebar yield strength = 60,000 lbf/in^2
- Dome concrete strength ≥ 4,500 lbf/in^2.
- Riser is 4" Schedule 40 pipe of material with a minimum yield stress greater than or equal to 30.0 kip/in^2.

3.2 MIT INSTALLATION (RISER LOCATIONS and DIMENSIONS)

The dimensions associated with the location of the MIT that affect the MIT design are the radial distance from the center of the tank to the MIT, the radial distance from the Mixer Pump to the MIT, and the distance from the riser bottom lip to the tank floor.

Based on the SY-101 MIT design, the MIT location dimensions are acceptable provided the following applicability requirements are satisfied:

ADVENT ENGINEERING SERVICES, INC.

Project: WHC - Evaluation of Tank 241SY101 MIT Design for Other Tanks	Prepared By: 4 Pbay	Date: 11/14/95	
Subject: Comparison of Tank/Waste Design Parameters	Reviewed By: R. BALIGA	Date: 11/15/95	
System: Multifunction Instrument Tree (MIT)	Job No. 95010	File No. 95010.1.1	
Client Calc. No.	Sheet No. 5-3	Rev. No. 2	

- Radial distance from the center of the tank to the MIT ≥ 28 ft
- Distance of riser bottom lip above tank floor ≤ 42.5 ft

3.3 MIT CONFIGURATION

Based on the SY-101 MIT design, the MIT configuration parameters are acceptable provided the following applicability requirements are satisfied:

- Total MIT assembly weight ≤ 925 lbf
- Uniform MIT weight below riser flange connection ≤ 525 lbf
- Probe head weight ≤ 400 lbf
- Distance of probe head c.g. above riser flange connection ≤ 4 ft
- Nominal MIT outer tube outside diameter = 3.5 in
- Nominal MIT outer tube wall thickness = 0.1875 in
- MIT outer tube material is seamless stainless steel with a minimum yield stress of 30.0 kip/in^2
- Sampling port cutout circumferential dimension ≤ 0.6 in
- Distance from thermocouple patch edge to bottom of riser lip ≥ 73 in
- Thermocouple patch (arc) chord dimension ≤ 1.25 in (or circumferential dimension ≤ 1.28 in)
- Circumferential weld flaw size ≤ 0.625 in. long and ≤ 0.04 in. deep
- Wall thickness removal due to backing ring milling ≤ 0.023 in
- Full circumferential weld flaw size ≤ 0.032 in. deep

Project	WHC - Evaluation of Tank 241SY101 MIT Design for Other Tanks	Prepared By: [illegible]	Date 10/23/95
Subject	Comparison of Tank/Waste Design Parameters	Reviewed By: [illegible]	Date 10/24/95
System	Multifunction Instrument Tree (MIT)	Job No. 95010	File No. 95010.1.1
Client Calc. No.		Sheet No. 3-4	Rev. No. 1

3.4 WASTE PARAMETERS

Based on the available information provided in WHC-EP-0711 and WHC-SD-WM-RD-027 (the Structural Design Specification (SDS) for the SY-101 tank), the applicable waste parameter values are shown in Table 3.4-1. Due to their variability, especially waste level, consideration is given to a range of possible values for specific gravity, viscosity, and waste level.

3.4.1 Specific Gravity

The specific gravity values evaluated as part of this study vary from 1.0 to greater than 1.7. The acceptability requirements for specific gravity are addressed in the various sections pertaining to the applicable loads (see sections 3.6 and 4.2).

3.4.2 Viscosity

The viscosity values evaluated as part of this study vary from 20 centipoise to 25,000 centipoise. The acceptability requirements for viscosity are addressed in the various sections pertaining to the applicable loads (see sections 3.6 and 4.2).

3.4.3 Waste Level

Waste levels evaluated in this study vary from 250 inches to 420 inches. Waste level acceptability requirements are addressed in the various sections pertaining to the applicable loads (sections 3.6 and 4.2).

3.4.4 Layers of Different Waste Materials

The MIT design for the SY-101 tank considered both non-layered waste and layered waste conditions. Based on available information provided in WHC-EP-0711, there is no significant layering of different waste materials that would require consideration of a variation of specific gravity through the depth of the waste (as there is for the SY-101 tank). Therefore, no further evaluation for the potential effects of layered waste is required.

Project	WHC - Evaluation of Tank 241SY101 MIT Design for Other Tanks	Prepared By: [illegible]	Date 10/23/95
Subject	Comparison of Tank/Waste Design Parameters	Reviewed By: [illegible]	Date 10/24/95
System	Multifunction Instrument Tree (MIT)	Job No. 95010	File No. 95010.1.1
Client Calc. No.		Sheet No. 3-5	Rev. No. 1

Table 3.4-1. Waste Parameters

TANK NO.	Specific Gravity	Viscosity (centipoise)	Waste Level (inches)
SY-101	1.0 to 1.7	20 to 25,000	400
SY-103	1.0 to 1.6	(1)	270 to 350
AW-101	1.0 to 1.6	(1)	404 to 418
AN-103	1.0 to 1.6	(1)	385 to 400
AN-104	1.0 to 1.5	(1)	385 to 400
AN-105	1.0 to 1.6	(1)	408 to 413
A-101	1.0 to 1.7	(1)	341 to 348

Notes to Table 3.4-1
1. Not Available

ADVENT ENGINEERING SERVICES, INC.

Project	WHC - Evaluation of Tank 241SY101 MIT Design for Other Tanks	Prepared By:	Date 10/18/95
Subject	Comparison of Tank/Waste Design Parameters	Reviewed By:	Date 10/19/95
System	Multifunction Instrument Tree (MIT)	Job No. 95010	File No. 95010.1.1
Client Calc. No.		Sheet No. 3-6	Rev. No. 0

3.5 WASTE and GAS VOLUME TEMPERATURE

The allowable yield stress of 30 kip/in^2 for the SY-101 MIT was based on a gas volume temperature of less than 100 °F and ASTM A-511 annealed stainless steel. The maximum stresses (mostly bending) occur near the bottom of the riser lip (near the top of the gas volume). The WHC-EP-0711 report indicates that gas volume temperatures in some of the tanks may approach 110 °F. Based on the ASME Boiler & Pressure Vessel Code Appendix I, Table I-2.2 values for high alloy austenitic steels with a minimum yield value of 30 kip/in^2 (Type 304 steels), the yield stress allowable at 110 °F is 29.5 kip/in^2. This represents only a 1.67% decrease in allowable stress due to the higher temperature and is considered insignificant.

Although the waste temperature (approximately 140 °F) is higher than the gas volume temperature, the decrease in allowable due to this higher temperature does not govern the analysis because the bending moments in the waste are much less than the controlling bending moments near the bottom of the riser lip.

Therefore, based on the SY-101 MIT design, the waste and gas volume temperatures are acceptable provided the following applicability requirements are satisfied:

- Gas volume temperature ≤ 110 °F
- Waste temperature ≤ 140 °F.

3.6 APPLICABLE DESIGN LOADS

3.6.1 Deadweight (D)

WHC-SD-WM-RD-027 (the SDS for the SY-101 tank) specifies that the MIT shall not weigh more than 1,000 lbf. However, the existing analysis is based on a MIT weight of 525 lbf uniformly distributed below the riser flange connection location and a concentrated weight of 400 lbf located above the riser flange connection for a total weight of 925 lbf.

Therefore, based on the SY-101 MIT design, the deadweight loads are acceptable provided the following applicability requirements are satisfied:

- Total MIT assembly weight ≤ 925 lbf

Project	WHC - Evaluation of Tank 241SY101 MIT Design for Other Tanks	Prepared By:	Date 11/14/95
Subject	Comparison of Tank/Waste Design Parameters	Reviewed By: R. MALIGA	Date 11/15/95
System	Multifunction Instrument Tree (MIT)	Job No. 95010	File No. 95010.1.1
Client Calc. No.		Sheet No. 3-7	Rev. No. 2

- Uniform MIT weight below riser flange connection ≤ 525 lbf
- Probe head weight above riser ≤ 400 lbf

3.6.2 Waste Rollover (WRO)

Waste Rollover loads are fluid drag loads on the MIT tube produced by a uniform waste velocity profile over the uppermost 10 ft of the waste (and zero waste velocity at greater depths). Following the approach used in ADVENT 1994, the waste rollover drag loads and resulting critical bending moment in the MIT tube are calculated according to the waste level, waste velocity, waste density, and waste viscosity.

From sheet 8-9 of ADVENT 1994, the critical bending moment in the SY-101 MIT tube due to waste rollover loads is 13,059 lbf-in (located at the gas sampling port 5 in. below the riser lip and developed by applying a factor 0.893 to a bending moment of 14,624 lbf-in on sheet 8-7). Tables 3.6.2-1 through 3.6.2-5 summarize sets of conditions which produce this same bending moment. The data from these tables are plotted in Figures 3.6.2-1 and 3.6.2-2. (The moment at the bottom of the riser lip produced by WRO is only 3.3% larger than at a location 5 in. lower. As there is more than adequate margin to account for this larger moment, Figures 3.6.2-1 and 3.6.2-2 are valid even if a gas sampling port is located directly at the bottom of the riser lip.) Formulas and variables used in the calculations are as follows:

R = Reynold's Number = uD/ν

C_d = drag coefficient for a cylinder = $f(R)$

F_{wro} = waste rollover load on MIT tube per unit length = $C_d A \rho u^2/2$

M_{wro} = critical bending moment in MIT tube due to waste rollover = $F_{wro}(L)(x - h + L)$

where u = uniform waste velocity over the uppermost 10 ft of the waste

D = MIT tube outside diameter = 3.5 in
ν = waste kinematic viscosity
A = projected area per unit length of MIT tube = D
ρ = waste mass density

ADVENT ENGINEERING SERVICES, INC.

Project: WHC - Evaluation of Tank 241SY101 MIT Design for Other Tanks	Prepared By: [illegible]	Date: 11/14/95	
Subject: Comparison of Tank/Waste Design Parameters	Reviewed By: R. BALIGA	Date: 11/15/95	
System: Multifunction Instrument Tree (MIT)	Job No. 95010	File No. 95010.1.1	
Client Calc. No.	Sheet No. 3-8	Rev. No. 2	

L = loaded length of MIT tube = 120 in
x = distance from the critical MIT tube section to the bottom of the tank = 492.2 in
h = waste level

The drag coefficient C_d is calculated via log-log interpolation between the following points (Ref. ADVENT 1994, Figure 6.1):

Reynold's Number (R)	Drag Coefficient (C_d)
20.0	2.0
5.0	3.8
2.0	7.0
0.1	60.0

Figure 3.6.2-1 illustrates the maximum allowable waste rollover velocity for any given waste level assuming the specific gravity of the waste is 1.5. The three curves provided illustrate sensitivity to the absolute viscosity of the waste. Figure 3.6.2-2 illustrates the maximum allowable waste rollover velocity for any given waste level assuming the absolute viscosity of the waste is 25,000 centipoise. The three curves provided illustrate sensitivity to waste specific gravity.

Waste parameters affecting MIT response due to waste rollover are waste level, waste rollover velocity, waste density, and waste viscosity. Representative values of these waste parameters that combine to define the applicability requirements of the existing MIT design are illustrated in Figures 3.6.2-1 and 3.6.2-2.

Therefore, based on the SY-101 MIT design, Waste Rollover loads are acceptable provided the following applicability requirements are satisfied:

- The maximum waste velocity over the top 10 feet of waste is to be enveloped by the applicable value from Figure 3.6.2-1 and Figure 3.6.2-2 with effectively zero velocity below the 10 foot depth or the maximum bending moment at riser lip caused by the forces associated with the velocity distribution must not exceed 13,487 lb-in.

- 250 inches ≤ waste level ≤ 420 inches

Project	WHC - Evaluation of Tank 241SY101 MIT Design for Other Tanks	Prepared By:	Date 10/18/95
Subject	Comparison of Tank/Waste Design Parameters	Reviewed By:	Date 10/19/95
System	Multifunction Instrument Tree (MIT)	Job No. 95010	File No. 95010.1.1
Client Calc. No.		Sheet No. 3-9	Rev. No. 0

3.6.3 Mixing Pump Circulation (MPC)

The MPC loading evaluated for the SY-101 MIT (ADVENT 1994) is based on waste velocity information provided in Attachment 2 to the SDS for the SY-101 tank and the resulting velocity profile is shown in Figure 6.2 of ADVENT 1994. From the velocity profile a drag load profile is calculated and is shown in Figure 6.4 of ADVENT 1994. The drag load profile shows that the only significant drag loading on the MIT occurs over the lower 200 inches of waste. Therefore, for waste levels of 250 inches to 420 inches, the velocity profile is likely to be similar to the one used for the SY-101 MIT and to ensure that the maximum MPC moment due to drag loads would be no greater than for the SY-101 MIT, the velocity magnitude profile should be enveloped by the Figure 3.6.3-1 velocity magnitude profile provided herein.

Flow-induced vibration due to vortex shedding caused by the MPC velocity profile is conservatively controlled by imposing the same limits on flow velocity magnitudes and on strain limits as those imposed for the SY-101 MIT. The conservatism occurs because at lower waste levels the structural frequencies increase slightly and move further from the SY-101 MIT vortex-shedding "lock-in" frequencies.

Therefore, based on the SY-101 MIT design, the Mixing Pump Circulation loading is acceptable provided the following applicability requirements are satisfied:

- Velocity profile enveloped by Figure 3.6.3-1, specific gravity $\leq$ 1.7 and mixed viscosity $\leq$ 500 centipoise or the maximum bending moment at the riser lip caused by the forces associated with the velocity distribution must not exceed 17,686 lb-in

- 250 inches $\leq$ waste level $\leq$ 420 inches

- Unless it can be verified, through in-situ tests, that vortex shedding is not present:

  -Mode 1 strain amplitude (½ range) $\leq$ 189 microstrain (at riser lip)

  -Mode 2 strain amplitude (½ range) $\leq$ 139 microstrain (at riser lip) for flow velocity in excess of the mode 2 "lock-in" velocity of 1.9 ft/s

Calculation Sheet

Project	WHC - Evaluation of Tank 241SY101 MIT Design for Other Tanks	Prepared By:	Date 10/18/95
Subject	Comparison of Tank/Waste Design Parameters	Reviewed By:	Date 10/19/95
System	Multifunction Instrument Tree (MIT)	Job No. 95010	File No. 95010.1.1
Client Calc. No.		Sheet No. 3-10	Rev. No. 0

3.6.4 Design Basis Earthquake (DBE)

The DBE evaluation for the SY-101 MIT provided in ADVENT 1994 is based on the superposition of two load considerations: an equivalent static "buoyancy" load and an inertia load, which includes the effects of added mass.

The equivalent static "buoyancy" loads determined in section 6.4 of ADVENT 1994 are based on a conservative peak spectral acceleration of 0.44 *g* (to provide the maximum possible buoyant force per unit length), a specific gravity of 1.7 and a waste depth of 400 inches. The acceleration level used in the development of the "buoyancy" load is taken from the 5% damped spectrum presented on sheet B1 (of Attachment B) of ADVENT 1994. The conservatism contained in the 0.44 *g* (vs. 0.42 g) spectral acceleration is sufficient to justify the applicability of the qualification to waste depths of up to 420 inches.

The weight distribution of the MIT assembly below the elevation of the riser flange was taken as uniformly distributed, totaling 525 lbf and the weight of the probe head is represented by a 400 lbf concentrated weight located 4 ft above the riser flange.

The DBE inertia load was evaluated in ADVENT 1994 by means of response spectrum modal analysis. The input loading to the analysis were response spectra, one response spectrum for each of three orthogonal directions of seismic input, e.g. North-South, East-West and Vertical; each consistent with the 5% damped spectrum shown on sheet B1 (of Attachment B) of ADVENT 1994. It is important to note that the use of the identified spectrum in the prediction of vertical seismic response (same as horizontal) implies that for the dome-mounted MIT there is a uniform amplification (across all frequencies) of the vertical free-field seismic excitation. The amplification factor is 1.5.

Julyk 1995 presents recommendations for in-structure vertical response spectra for dome-mounted equipment which are intended to address amplification due to the dynamic motion of the dome. Julyk 1995 provides in-structure response spectra in its Figure 5 with corresponding amplification factors in its Figure 6. The dynamic analysis of the MIT reported in ADVENT 1994 revealed that the fundamental vertical mode of the MIT was above 33 Hz. Figure 6 of Julyk 1995 indicates that for frequencies above 33Hz., the dome vertical amplification factor is no more than 1.5 for locations greater than a 21 ft. from the center of the dome. Consequently, the 1.5 amplification of vertical free-field seismic excitation implied in

Project	WHC - Evaluation of Tank 241SY101 MIT Design for Other Tanks	Prepared By:	Date 10/18/95
Subject	Comparison of Tank/Waste Design Parameters	Reviewed By:	Date 10/19/95
System	Multifunction Instrument Tree (MIT)	Job No. 95010	File No. 95010.1.1
Client Calc. No.		Sheet No. 3-11	Rev. No. 0

the existing MIT analysis envelopes the requirements of Julyk, 1995.

The MIT's fundamental bending mode dominated its horizontal inertia load response. A review of the input spectrum provides a basis for reaching conclusions regarding the effects of variations in waste depth (250 to 420 inches) on the MIT seismic inertia loads. ADVENT 1994 predicted the fundamental bending mode of the MIT, for 400 inches of waste depth, to be 0.24 Hz., just below the control point between the constant displacement and constant velocity regimes of the input spectra. A reduction in waste depth results in a decrease in the added mass of the fluid surrounding the MIT, and a consequently small increase in its natural frequency. The small increase in natural frequency, if sufficient to allow for a cross into the constant velocity regime of the spectrum (where spectral displacements are decreasing), would result in a decrease in predicted seismic inertial response; if insufficient, would result in no change in predicted seismic inertial response (constant spectral displacement). The small increase in waste depth to 420 inches results in an increase in the added mass of the fluid surrounding the MIT, and a consequently small decrease in its natural frequency, resulting in no change in predicted seismic inertial response (constant spectral displacement).

Therefore, based on the SY-101 MIT design, the DBE loading is acceptable provided the following applicability requirements are satisfied:

- A seismic design basis, enveloped by or equivalent to the SDC-4.1 Figure 3 response spectrum - 0.2 *g* (5% critical damping)
- 250 inches ≤ waste level ≤ 420 inches
- Specific gravity ≤ 1.7
- Viscosity ≤ 25,000 centipoise.

3.6.5 Waste Sloshing (SL)

The sloshing evaluation for the SY-101 MIT provided in ADVENT 1994 is based, in part, on the slosh frequency and displacements provided in Attachment 6 (Tank Slosh Displacements) to the SDS for the SY-101 tank. The following approach and equations are based on the calculation presented in the SDS Attachment 6. The SDS Attachment 6 calculation provides the first mode slosh frequency and displacements using a simplified approach

Project	WHC - Evaluation of Tank 241SY101 MIT Design for Other Tanks	Prepared By:	Date 10/18/95
Subject	Comparison of Tank/Waste Design Parameters	Reviewed By:	Date 10/19/95
System	Multifunction Instrument Tree (MIT)	Job No. 95010	File No. 95010.1.1
Client Calc. No.		Sheet No. 3-12	Rev. No. 0

from Blevins 1979 that is based on the following assumptions:

(1) The liquid is homogenous, inviscid, irrotational, and incompressible.
(2) The boundaries of the basin (the tank wall and floor) are rigid.
(3) The wave amplitudes are sufficiently small in comparison with the wavelengths and depths to permit nonlinear effects to be neglected.
(4) The influence of the surrounding atmosphere is negligible.
(5) The influence of surface tension is negligible.

Justification of the validity of these assumptions is beyond the scope of this calculation. However, it is noteworthy that the equations presented in BNL 52361 for sloshing are the same as the equations presented in Blevins 1979 and therefore, rely on the same set of assumptions.

The slosh frequency is a function of the waste level and is given by the following equation:

$$f = \frac{1}{2\pi}[gk\tanh(kh)]^{0.5}$$

where f = frequency (Hz)
g = 32.2 (ft/s^2)
k = λ/R (ft^{-1})
λ = mode coefficient from Blevins 1979 = 1.841 for first mode
R = radius of tank (ft) = 37.5 ft
h = fluid height (ft).

Therefore, k = 1.841/37.5 = 0.0491 (ft^{-1}).

The maximum vertical slosh displacement for the first sloshing mode occurs at the outer radius of the waste surface and is given by:

$$\eta_v = 0.837\ R\ S_a\ (12\ \text{in/ft})$$

where η_v = max. vertical slosh displacement (in)
S_a = spectral acceleration at the natural frequency (g)

Using the interpolated SDC-4.1 spectral accelerations for a 2%-damped 0.2 g earthquake, a(2%), and scaling by the same factor of 1.17 used in the SDS Attachment 6 to obtain 0.5%-damped (SDS Attachment 6) spectral accelerations, a(0.5%), the following equation is used to obtain the maximum vertical slosh displacements, d(maxv),

ADVENT ENGINEERING SERVICES, INC.

Calculation Sheet

Project	WHC - Evaluation of Tank 241SY101 MIT Design for Other Tanks	Prepared By:	Date 10/18/95
Subject	Comparison of Tank/Waste Design Parameters	Reviewed By:	Date 10/19/95
System	Multifunction Instrument Tree (MIT)	Job No. 95010	File No. 95010.1.1
Client Calc. No.		Sheet No. 3-13	Rev. No. 0

$$d(maxv) = 0.837\ R\ a(0.5\%)\ (12\ in/ft)$$

where d(maxv) = max. vertical slosh displacement (in)
a(0.5%) = 0.5%-damped spectral accel. at the natural freq. (g).

The maximum horizontal displacement occurs at the center of the tank at the waste surface and is obtained by scaling d(maxv) by the ratio

$$\frac{d(maxh)}{d(maxv)} = \frac{gk}{2\omega^2 J_1(kR)}$$

where d(maxh) = max. horizontal slosh displacement (in)
ω = fundamental frequency (s^{-1})
$J_1()$ = Bessel function of the first kind.

Similarly, the minimum displacement at the center of the tank occurs at the bottom of the waste and is obtained by scaling d(maxh) by the ratio

$$\frac{d(minh)}{d(maxh)} = \frac{1}{\cosh(kh)}$$

where d(minh) = min. center horizontal slosh displacement (in).

The SDS Attachment 6 provides an equivalent slosh displacement of 9.8 inches at the center of the tank so that a velocity-squared dependent drag force, uniform with respect to depth, z, produces the same bending moment as the nonuniform slosh displacement profile, d_o, which is dependent on

$$f(z) = \frac{\cosh(k(h+z))}{\cosh(kh)}$$

and thus,

$$h d_e^2 \left(s + \frac{h}{2}\right) = d_o^2 \int_{-h}^{0} (s-z) f^2(z) dz$$

where d_e = equiv. displacement to produce equivalent bending moment (in)
s = distance above waste level to the riser lip (ft)

ADVENT ENGINEERING SERVICES, INC.

Calculation Sheet

Project	WMC - Evaluation of Tank 241SY101 MIT Design for Other Tanks	Prepared By:	Date 10/18/95
Subject	Comparison of Tank/Waste Design Parameters	Reviewed By:	Date 10/19/95
System	Multifunction Instrument Tree (MIT)	Job No. 95010	File No. 95010.1.1
Client Calc. No.		Sheet No. 3-14	Rev. No. 0

The values used in the SDS Attachment 6 for h and s of 35.2 ft (or 422.4 in) and 24.4 ft (or 292.8 in), respectively, are conservative. Because the maximum moment occurs near the riser lip, the actual s value corresponding to an h of 35 ft (or 420 in) is only about 7 ft (or 84 in). Therefore, the following calculations are based on a total distance from the end of the MIT to the bottom of the riser lip of $h + s = 42$ ft.

Using the solutions derived in the SDS Attachment 6 and by substitution, the equation for determining d_e is:

$$d_e = d_o\left[\left[\frac{1}{\frac{1}{2} + s/h}\right]\left[\frac{s}{h}\left(\frac{2kh+\sinh(2kh)}{4kh\cosh^2(kh)}\right) - \frac{\frac{1}{4}\left(k^2h^2 + kh\sinh(2kh) - \frac{1}{2}(\cosh(2kh) - 1)\right)}{(kh)^2\cosh^2(kh)} + \frac{2kh + \sinh(2kh)}{4kh\cosh^2(kh)}\right]\right]^{1/2}$$

Some reduction of d_e can be obtained for locations at a given radial distance from the center of the tank. The SDS Attachment 6 shows that at a location of one-half the tank radius (or 18.75 ft), d_e can be reduced using a factor of 0.898. This factor is an envelope of the largest reduction factors for both radial and tangential displacements (to account for the variability in earthquake direction). Similarly, the reduction factor for a location at a radial distance of 28 ft from the tank center is calculated as:

$$\frac{d_{r=28}}{d_o} = \frac{2J_1(kr)}{kr}$$

where $d_{r=28}$ = slosh displacement at a 28 ft radius (in)
$r = 28$ (ft).

Table 3.6.5-1 shows the calculated fundamental slosh frequencies and the associated spectral accelerations, maximum vertical slosh displacements and maximum and minimum (at the tank center) horizontal slosh displacements and equivalent slosh displacements for a range of waste levels from 250 inches to 420 inches. The table indicates that for the range of waste levels considered, the slosh frequencies are not very sensitive to waste level (e.g. a 30% reduction in waste level from 400 inches to 280 inches results in only a 6.2% reduction in frequency from 0.193 Hz to 0.181 Hz) and the maximum horizontal displacements are virtually unaffected by changes in waste level (constant at approximately 18.6 inches). However, the table indicates that the slosh displacements at the bottom of the tank increase with decreasing waste depth and likewise, the equivalent slosh displacements to be applied in the slosh analysis also increase with decreasing waste depth. Figure 3.6.5-1 shows a plot of the fundamental

Project	WHC - Evaluation of Tank 241SY101 MIT Design for Other Tanks	Prepared By:	Date 10/18/95
Subject	Comparison of Tank/Waste Design Parameters	Reviewed By:	Date 10/19/95
System	Multifunction Instrument Tree (MIT)	Job No. 95010	File No. 95010.1.1
Client Calc. No.		Sheet No. 3-15	Rev. No. 0

slosh frequencies and equivalent slosh displacements at a radius of 28 ft for the range of waste levels considered.

The Table 3.6.5-1 equivalent displacements at a radius of 28 ft and the frequencies for waste levels of 250, 300, 350 and 400 inches are used to perform the slosh analysis. The maximum moments are calculated for the controlling case (slosh case 3 from ADVENT 1994) using the following program and compared to the ADVENT 1994 slosh case 3 maximum moment of 11,751 lbf-in.

The slosh analysis results show that the maximum moment of 10,919 lbf-in occurs at a waste level of 250 inches and that the maximum moment decreases with increasing waste level. However, this maximum value is less than the previously qualified moment of 11,751 lbf-in reported in ADVENT 1995.

Therefore, based on the SY-101 MIT design, the waste slosh loading is acceptable provided the following applicability requirements are satisfied:

- A seismic design basis, enveloped by or equivalent to the SDC-4.1 Figure 3 response spectrum - 0.2 *g* (2% critical damping), which is scaled to obtain spectral values at 0.5 % critical damping
- 250 inches ≤ waste level ≤ 420 inches
- Specific Gravity ≤ 1.7
- Viscosity ≤ 25,000 centipoise.

Calculation Sheet

Project	WHC - Evaluation of Tank 241SY101 MIT Design for Other Tanks	Prepared By:	Date 10/18/95
Subject	Comparison of Tank/Waste Design Parameters	Reviewed By:	Date 10/19/95
System	Multifunction Instrument Tree (MIT)	Job No. 95010	File No. 95010.1.1
Client Calc. No.		Sheet No. 3-16	Rev. No. 0

Program MIT5A.EXE Source Code

```
CC
CC  Cylinder / Sloshing Dynamics Interaction
CC

      Integer   Num,Cycle
      Double Precision      k(6,6),m(6),d,cps,w,f(6),t
      Double Precision      Dmax(6),Vmax(6),Amax(6),Mmax,l(6)
      Integer   CDmax(6),CVmax(6),CAmax(6),CMmax
      Double Precision      Dr(6),Vr(6),Ar(6),Fr(6)
      Double Precision      tt,Vs,sig(6),Mo,mm(6)
      Double Precision      Vi(6), Cd(6), Re(6)
      Double Precision      Fk(6), Fv(6), Smax

      Do i = 1,6
c        Write(*, '( /36H Enter Cylinder Mass (lb)            --> ,\)')
        Read(*,*)m(i)
c        Write(*, '( /36H Enter Trib. Drag Length (in)   --> ,\)')
        Read(*,*)l(i)
c        Write(*, '( /36H Enter Viscosity (centipoise)   --> ,\)')
        Read(*,*)Vi(i)
c        Write(*, '( /38H Enter Moment Matrix Term (in-lb/in)> ,\)')
        Read(*,*)mm(i)
         Do j = 1,6
c           Write(*, '( /36H Enter Stiff Matrix Term (lb/in) -> ,\)')
          Read(*,*)k(i,j)
         Enddo
      Enddo

c      Write(*, '( /36H Enter Sloshing Max Disp (in)   --> ,/)')
      Read(*,*)d
c      Write(*, '( /36H Enter Sloshing Frequency (cps) --> ,/)')
      Read(*,*)cps
c      Write(*, '( /36H Enter Integration Time Step (s)--> ,/)')
      Read(*,*)t
c      Write(*, '( /36H Enter Number Of Cycles         --> ,/)')
      Read(*,*)Cycle
      Write(*, '(/)')

      Write(*, '(/32H Mass Matrix (lb)              )')
      Do i = 1,6
        Write(*, '(I2,F12.3)')i, m(i)
```


ADVENT
ENGINEERING SERVICES, INC.

Calculation Sheet

Project	WHC - Evaluation of Tank 241SY101 MIT Design for Other Tanks	Prepared By:	Date 10/18/95
Subject	Comparison of Tank/Waste Design Parameters	Reviewed By:	Date 10/18/95
System	Multifunction Instrument Tree (MIT)	Job No. 95010	File No. 95010.1.1
Client Calc. No.		Sheet No. 3-17	Rev. No. 0

```
Enddo

Write(*, '(/32H Trib. Drag Length Matrix (in)  )')
Do i = 1,6
  Write(*, '(I2,F12.3)')i, l(i)
Enddo

Write(*, '(/36H Cylinder Stiffness Matrix (lb/in)       )')
Write(*, '(I12,5I11)')(i,i=1,6)
Do i=1,6
    Write(*, '(I2,F12.3,5F11.3)')i,(k(i,j),j=1,6)
Enddo

Write(*, '(/36H Cylinder Moment Matrix (in-lb/in)       )')
Do i=1,6
    Write(*, '(I2,F15.5)')i,mm(i)
Enddo

Write(*, '(/32H Viscosity Matrix (centipoise)  )')
Do i=1,6
    Write(*, '(I2,F12.3)')i,Vi(i)
Enddo

Write(*, '(/36H Sloshing Max Disp (in)          --> ,F12.5)')d
Write(*, '(36H Sloshing Frequency (cps)        --> ,F12.5)')cps
Write(*, '(36H Integration Time Step (s)       --> ,F12.5)')t
Write(*, '(36H Number Of Cycles                --> ,I12,/)')Cycle

tt=0

w = cps * (2.*3.1415926)
Vs = w * d * cos(w * tt)

Do i = 1, 6
   m(i) = m(i) / 386.4

   Dmax(i) = 0.0
   Vmax(i) = 0.0
   Amax(i) = 0.0
   Mmax = 0.0

   CDmax(i) = 0
   CVmax(i) = 0
```


ADVENT
ENGINEERING SERVICES INC

Calculation Sheet

Project	WHC - Evaluation of Tank 241SY101 MIT Design for Other Tanks	Prepared By:	Date 10/18/95
Subject	Comparison of Tank/Waste Design Parameters	Reviewed By:	Date 10/19/95
System	Multifunction Instrument Tree (MIT)	Job No. 95010	File No. 95010.1.1
Client Calc. No.		Sheet No. 3-18	Rev. No. 0

```
            CAmax(i) = 0
            CMmax = 0

            Dr(i) = 0.0
            Vr(i) = 0.0
            If (l(i).lt..001) goto 105
            sig(i) = 1.0
            If(Vs .lt. Vr(i)) sig(i) = -1.0

            Re = Abs(Vs - Vr(i)) * 3830. / Vi(i)
            Call Reynolds( Re(i), Cd(i))
105         f(i) = .1111 * Cd(i) * l(i) / 400

            Fk(i) = 0.
            Fv(i) = 0.

              Do j = 1,6
                Fk(i) = Fk(i) - k(i,j) * Dr(j)
                Fv(i) = Fv(i) - .1 * k(i,j) / w * Vr(j)
              Enddo

            Fr(i) = sig(i) * f(i) * (Vs - Vr(i))**2. + Fk(i) + Fv(i)
            Ar(i) = Fr(i) / m(i)
          Enddo

          Num = Float(Cycle)/cps/t

              Do kk = 1, Num

                tt = tt + t

              Do i = 1,6
               Dr(i) = Dr(i) + Vr(i)*t + 0.5*Ar(i)*t*t
               Vr(i) = Vr(i) + Ar(i)*t
               Mo = 0.
              Enddo

                Do j = 1,6
                 Mo = Mo + mm(j) * Dr(j)
                Enddo

              Do i = 1,6
               Vs = w * d * cos(w * tt)
```


ADVENT ENGINEERING SERVICES, INC.

Calculation Sheet

Project	WHC - Evaluation of Tank 241SY101 MIT Design for Other Tanks	Prepared By:	Date 10/18/95
Subject	Comparison of Tank/Waste Design Parameters	Reviewed By:	Date 10/19/95
System	Multifunction Instrument Tree (MIT)	Job No. 95010	File No. 95010.1.1
Client Calc. No.		Sheet No. 3-19	Rev. No. 0

```
            If (l(i).lt..001) goto 100
            sig(i) = 1.0
            If(Vs .lt. Vr(i)) sig(i) = -1.0
            Re(i) = Abs(Vs - Vr(i)) * 3830. / Vi(i)

            Call Reynolds( Re(i), Cd(i))

100         f(i) = .1111 * Cd(i) * l(i) / 400

            Fk(i) = 0.
            Fv(i) = 0.

             Do j = 1,6
              Fk(i) = Fk(i) - k(i,j) * Dr(j)
              Fv(i) = Fv(i) - .1 * k(i,j) / w * Vr(j)
             Enddo

            Fr(i) = sig(i) * f(i) * (Vs - Vr(i))**2. + Fk(i) + Fv(i)
            Ar(i) = Fr(i) / m(i)

            Iflg = 0

            If(Abs(Dr(i)) .gt. Dmax(i)) Then
               Dmax(i) = Abs(Dr(i))
               CDmax(i)= Ifix(tt*cps)+1
               Iflg = 1
            Endif

            If(Abs(Vr(i)) .gt. Vmax(i)) Then
               Vmax(i) = Abs(Vr(i))
               CVmax(i)= Ifix(tt*cps)+1
               Iflg = 1
            Endif

            If(Abs(Ar(i)) .gt. Amax(i)) Then
               Amax(i) = Abs(Ar(i))
               CAmax(i)= Ifix(tt*cps)+1
               Iflg = 1
            Endif

           Enddo

            If(Abs(Mo) .gt. Mmax) Then
```

Calculation Sheet

Project	WHC - Evaluation of Tank 241SY101 MIT Design for Other Tanks	Prepared By: T Neal Weston	Date 10/18/95
Subject	Comparison of Tank/Waste Design Parameters	Reviewed By: A P Day	Date 10/19/95
System	Multifunction Instrument Tree (MIT)	Job No. 95010	File No. 95010.1.1
Client Calc. No.		Sheet No. 3-20	Rev. No. 0

```
                Mmax = Abs(Mo)
                CMmax = Ifix(tt*cps)+1
                Iflg = 1
              Endif
            Enddo

        Write(*, '(36H Maximum Values (Cycle Occurrence)  )')
        Write(*, '(40H                    (in)                    ,
     +          40H  (in/s)                  (in/s/s)       )')
          Do i = 1,6
            Write(*,102)i,Dmax(i),CDmax(i),Vmax(i),
     +                  CVmax(i),Amax(i),CAmax(i)
  102     Format(I2,4H    ,
     +        9HMax Dis =,F8.2,2H (,I2,4H)   ,
     +        9HMax Vel =,F8.2,2H (,I2,4H)   ,
     +        9HMax Acc =,F8.2,2H (,I2,4H)   )
          Enddo
        Write(*, '(/36H Max. Moment Occurs at Cycle    --> ,I15)')CMmax
        Write(*, '(/36H Max. Moment (in-lb)            --> ,F15.5)')Mmax
        Smax = Mmax/1.5377
        Write(*, '(/36H Max. Nom. Stress (psi)         --> ,F15.5)')Smax

        End

        Subroutine Reynolds(Re, Ce)
        Double Precision Re, Ce
c  Using log-log interpolation of data plotted in Figure 10.13 (p. 300)
c   of "Fluid Mechanics and Engineering Applications" by
c   Daugherty and Franzini, calculate drag coefficient versus
c   Reynold's number for a circular cylinder.

        Double Precision cd(8),rnum(8),expon,a,b

c  Data points defining straight-line portions of curve.
        data rnum/5000,3000,1000,50,20,5,2,.1/
       &cd/1,.9,1,1.6,2,3.8,7,60/

        do 200 j=1,7
          if(Re.ge.rnum(j+1).and.Re.lt.rnum(j)) then
            a=alog10(rnum(j)/Re)
            b=alog10(rnum(j)/rnum(j+1))
            expon=a/b
            Ce =cd(j) * (cd(j+1)/cd(j))**expon
```


ADVENT ENGINEERING SERVICES, INC

Calculation Sheet

Project	WHC - Evaluation of Tank 241SY101 MIT Design for Other Tanks	Prepared By:	Date 10/18/95
Subject	Comparison of Tank/Waste Design Parameters	Reviewed By:	Date 10/19/95
System	Multifunction Instrument Tree (MIT)	Job No. 95010	File No. 95010.1.1
Client Calc. No.		Sheet No. 3-21	Rev. No. 0

```
          Return
        end if
  200 continue
        if(Re.lt..1) Ce = 6/Re
        if(Re.gt.5000.) Ce = 1

        Return
      end
```


ADVENT
ENGINEERING SERVICES INC

Calculation Sheet

Project	WHC - Evaluation of Tank 241SY101 MIT Design for Other Tanks	Prepared By:	Date 10/18/95
Subject	Comparison of Tank/Waste Design Parameters	Reviewed By:	Date 10/19/95
System	Multifunction Instrument Tree (MIT)	Job No. 95010	File No. 95010.1.1
Client Calc. No.		Sheet No. 3-22	Rev. No. 0

Program MIT5A.EXE Results for Case 3 - Waste Level = 250 inches

Mass Matrix (lb)

1	33.000
2	44.000
3	82.300
4	138.100
5	194.000
6	194.000

Trib. Drag Length Matrix (in)

1	.000
2	.000
3	.000
4	50.000
5	100.000
6	100.000

Cylinder Stiffness Matrix (lb/in)

	1	2	3	4	5	6
1	15463.000	-6622.000	1544.000	-304.000	76.000	-13.000
2	-6622.000	4829.000	-2122.000	622.000	-156.000	26.000
3	1544.000	-2122.000	1833.000	-1020.000	372.000	-62.000
4	-304.000	622.000	-1020.000	1146.000	-755.000	204.000
5	76.000	-156.000	372.000	-755.000	774.000	-285.000
6	-13.000	26.000	-62.000	204.000	-285.000	126.000

Cylinder Moment Matrix (in-lb/in)

1	-67795.00000
2	6665.00000
3	-1061.00000
4	209.00000
5	-52.00000
6	8.70000

Viscosity Matrix (centipoise)

1	.000
2	.000
3	.000
4	25000.000
5	25000.000
6	25000.000

Sloshing Max Disp (in)	-->	10.76000
Sloshing Frequency (cps)	-->	.17570
Integration Time Step (s)	-->	.00010
Number Of Cycles	-->	10

Maximum Values (Cycle Occurrence)

		(in)		(in/s)		(in/s/s)
1	Max Dis =	.23 (1)	Max Vel =	.25 (1)	Max Acc =	1.85 (1)
2	Max Dis =	.94 (1)	Max Vel =	1.03 (1)	Max Acc =	7.38 (1)
3	Max Dis =	2.49 (1)	Max Vel =	2.70 (1)	Max Acc =	17.61 (1)
4	Max Dis =	5.16 (1)	Max Vel =	5.61 (1)	Max Acc =	40.67 (1)
5	Max Dis =	8.24 (1)	Max Vel =	8.95 (1)	Max Acc =	58.48 (1)
6	Max Dis =	11.47 (1)	Max Vel =	12.45 (1)	Max Acc =	58.45 (1)

Max. Moment Occurs at Cycle	-->	1
Max. Moment (in-lb)	-->	10919.08843
Max. Nom. Stress (psi)	-->	7100.92217

ADVENT ENGINEERING SERVICES, INC.

Calculation Sheet

Project	WHC - Evaluation of Tank 241SY101 MIT Design for Other Tanks	Prepared By:	Date 10/18/95
Subject	Comparison of Tank/Waste Design Parameters	Reviewed By:	Date 10/19/95
System	Multifunction Instrument Tree (MIT)	Job No. 95010	File No. 95010.1.1
Client Calc. No.		Sheet No. 3-23	Rev. No. 0

Program MIT5A.EXE Results for Case 3 - Waste Level = 300 inches

Mass Matrix (lb)

1	33.000
2	44.000
3	82.300
4	194.000
5	194.000
6	194.000

Trib. Drag Length Matrix (in)

1	.000
2	.000
3	.000
4	100.000
5	100.000
6	100.000

Cylinder Stiffness Matrix (lb/in)

	1	2	3	4	5	6
1	15463.000	-6622.000	1544.000	-304.000	76.000	-13.000
2	-6622.000	4829.000	-2122.000	622.000	-156.000	26.000
3	1544.000	-2122.000	1833.000	-1020.000	372.000	-62.000
4	-304.000	622.000	-1020.000	1146.000	-755.000	204.000
5	76.000	-156.000	372.000	-755.000	774.000	-285.000
6	-13.000	26.000	-62.000	204.000	-285.000	126.000

Cylinder Moment Matrix (in-lb/in)

1	-67795.00000
2	6665.00000
3	-1061.00000
4	209.00000
5	-52.00000
6	8.70000

Viscosity Matrix (centipoise)

1	.000
2	.000
3	.000
4	25000.000
5	25000.000
6	25000.000

Sloshing Max Disp (in)	-->	9.68000
Sloshing Frequency (cps)	-->	.18360
Integration Time Step (s)	-->	.00010
Number Of Cycles	-->	10

Maximum Values (Cycle Occurrence)

		(in)		(in/s)		(in/s/s)
1	Max Dis =	.22 (1)	Max Vel =	.25 (1)	Max Acc =	2.43 (1)
2	Max Dis =	.94 (1)	Max Vel =	1.06 (1)	Max Acc =	9.55 (1)
3	Max Dis =	2.46 (1)	Max Vel =	2.78 (1)	Max Acc =	22.22 (1)
4	Max Dis =	5.07 (1)	Max Vel =	5.72 (1)	Max Acc =	53.42 (1)
5	Max Dis =	8.06 (1)	Max Vel =	9.08 (1)	Max Acc =	55.89 (1)
6	Max Dis =	11.15 (1)	Max Vel =	12.56 (1)	Max Acc =	53.94 (1)

Max. Moment Occurs at Cycle	-->	1
Max. Moment (in-lb)	-->	10874.69231
Max. Nom. Stress (psi)	-->	7072.05040

ADVENT
ENGINEERING SERVICES INC

Calculation Sheet

Project	WHC - Evaluation of Tank 241SY101 MIT Design for Other Tanks	Prepared By:	Date 10/18/95
Subject	Comparison of Tank/Waste Design Parameters	Reviewed By:	Date 10/19/95
System	Multifunction Instrument Tree (MIT)	Job No. 95010	File No. 95010.1.1
Client Calc. No.		Sheet No. 3-24	Rev. No. 0

Program MIT5A.EXE Results for Case 3 - Waste Level = 350 inches

Mass Matrix (lb)

1	33.000
2	44.000
3	138.100
4	194.000
5	194.000
6	194.000

Trib. Drag Length Matrix (in)

1	.000
2	.000
3	50.000
4	100.000
5	100.000
6	100.000

Cylinder Stiffness Matrix (lb/in)

	1	2	3	4	5	6
1	15463.000	-6622.000	1544.000	-304.000	76.000	-13.000
2	-6622.000	4829.000	-2122.000	622.000	-156.000	26.000
3	1544.000	-2122.000	1833.000	-1020.000	372.000	-62.000
4	-304.000	622.000	-1020.000	1146.000	-755.000	204.000
5	76.000	-156.000	372.000	-755.000	774.000	-285.000
6	-13.000	26.000	-62.000	204.000	-285.000	126.000

Cylinder Moment Matrix (in-lb/in)

1	-67795.00000
2	6665.00000
3	-1061.00000
4	209.00000
5	-52.00000
6	8.70000

Viscosity Matrix (centipoise)

1	.000
2	.000
3	25000.000
4	25000.000
5	25000.000
6	25000.000

Sloshing Max Disp (in)	-->	8.63000
Sloshing Frequency (cps)	-->	.10900
Integration Time Step (s)	-->	.00010
Number Of Cycles	-->	10

Maximum Values (Cycle Occurrence)

		(in)		(in/s)		(in/s/s)
1	Max Dis =	.22 (1)	Max Vel =	.25 (1)	Max Acc =	4.03 (1)
2	Max Dis =	.90 (1)	Max Vel =	1.06 (1)	Max Acc =	13.32 (1)
3	Max Dis =	2.34 (1)	Max Vel =	2.72 (1)	Max Acc =	33.31 (1)
4	Max Dis =	4.78 (1)	Max Vel =	5.35 (1)	Max Acc =	48.46 (1)
5	Max Dis =	7.55 (1)	Max Vel =	8.74 (1)	Max Acc =	48.54 (1)
6	Max Dis =	10.42 (1)	Max Vel =	12.06 (1)	Max Acc =	48.35 (1)

Max. Moment Occurs at Cycle	-->	1
Max. Moment (in-lb)	-->	10437.88166
Max. Nom. Stress (psi)	-->	6787.98288

ADVENT ENGINEERING SERVICES INC

Calculation Sheet

Project	WHC - Evaluation of Tank 241SY101 MIT Design for Other Tanks	Prepared By:	Date 10/18/95
Subject	Comparison of Tank/Waste Design Parameters	Reviewed By:	Date 10/19/95
System	Multifunction Instrument Tree (MIT)	Job No. 95010	File No. 95010.1.1
Client Calc. No.		Sheet No. 3-25	Rev. No. 0

Program MIT5A.EXE Results for Case 3 - Waste Level = 400 inches

Mass Matrix (lb)

1	33.000
2	44.000
3	194.000
4	194.000
5	194.000
6	194.000

Trib. Drag Length Matrix (in)

1	.000
2	.000
3	100.000
4	100.000
5	100.000
6	100.000

Cylinder Stiffness Matrix (lb/in)

	1	2	3	4	5	6
1	15463.000	-6622.000	1544.000	-304.000	76.000	-13.000
2	-6622.000	4829.000	-2122.000	622.000	-156.000	26.000
3	1544.000	-2122.000	1833.000	-1020.000	372.000	-62.000
4	-304.000	622.000	-1020.000	1146.000	-755.000	204.000
5	76.000	-156.000	372.000	-755.000	774.000	-285.000
6	-13.000	26.000	-62.000	204.000	-285.000	126.000

Cylinder Moment Matrix (in-lb/in)

1	-67795.00000
2	6665.00000
3	-1061.00000
4	209.00000
5	-52.00000
6	8.70000

Viscosity Matrix (centipoise)

1	.000
2	.000
3	25000.000
4	25000.000
5	25000.000
6	25000.000

Sloshing Max Disp (in)	-->	7.61000
Sloshing Frequency (cps)	-->	.19270
Integration Time Step (s)	-->	.00010
Number Of Cycles	-->	10

Maximum Values (Cycle Occurrence)

		(in)		(in/s)		(in/s/s)
1	Max Dis =	.20 (1)	Max Vel =	.24 (1)	Max Acc =	5.32 (1)
2	Max Dis =	.84 (1)	Max Vel =	1.00 (1)	Max Acc =	18.09 (1)
3	Max Dis =	2.18 (1)	Max Vel =	2.59 (1)	Max Acc =	41.40 (1)
4	Max Dis =	4.42 (1)	Max Vel =	5.23 (1)	Max Acc =	43.53 (1)
5	Max Dis =	6.95 (1)	Max Vel =	8.19 (1)	Max Acc =	42.11 (1)
6	Max Dis =	9.57 (1)	Max Vel =	11.27 (1)	Max Acc =	42.20 (1)

Max. Moment Occurs at Cycle	-->	1
Max. Moment (in-lb)	-->	9813.48777
Max. Nom. Stress (psi)	-->	6381.92587

ADVENT ENGINEERING SERVICES, INC

Calculation Sheet

Project	WHC - Evaluation of Tank 241SY101 MIT Design for Other Tanks	Prepared By:	Date 10/18/95
Subject	Comparison of Tank/Waste Design Parameters	Reviewed By:	Date 10/19/95
System	Multifunction Instrument Tree (MIT)	Job No. 95010	File No. 95010.1.1
Client Calc. No.		Sheet No. 3-26	Rev. No. 0

Figure 3.6.2-1. Maximum Waste Rollover Velocity vs. Waste Level (Absolute Viscosity Varied)

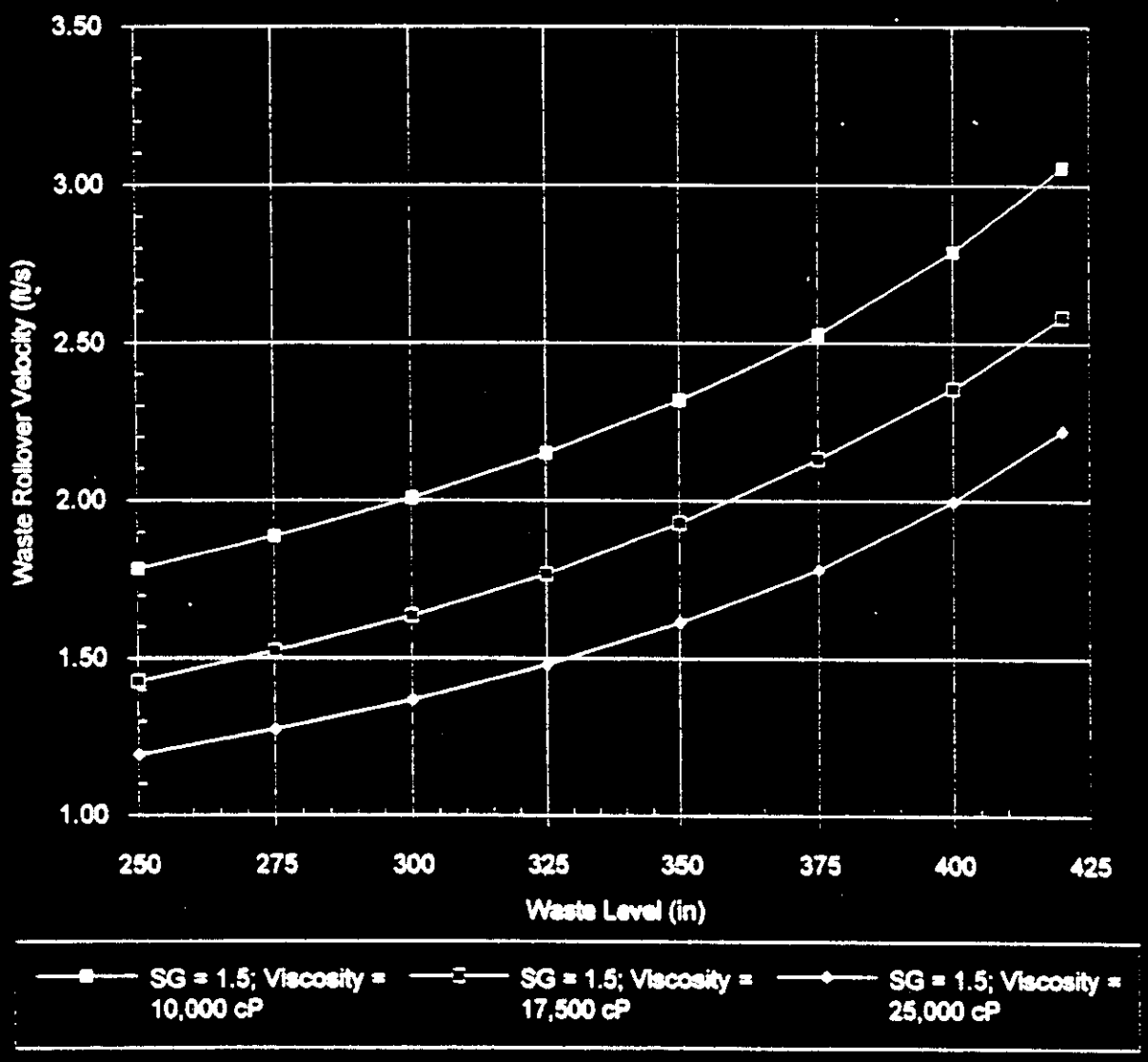

(WRO1.XLC)

ADVENT ENGINEERING SERVICES INC

Calculation Sheet

Project	WHC - Evaluation of Tank 241SY101 MIT Design for Other Tanks	Prepared By:	Date 10/18/95
Subject	Comparison of Tank/Waste Design Parameters	Reviewed By:	Date 10/19/95
System	Multifunction Instrument Tree (MIT)	Job No. 95010	File No. 95010.1.1
Client Calc. No.		Sheet No. 3-27	Rev. No. 0

Figure 3.6.2-2. Maximum Waste Rollover Velocity vs. Waste Level (Specific Gravity Varied)

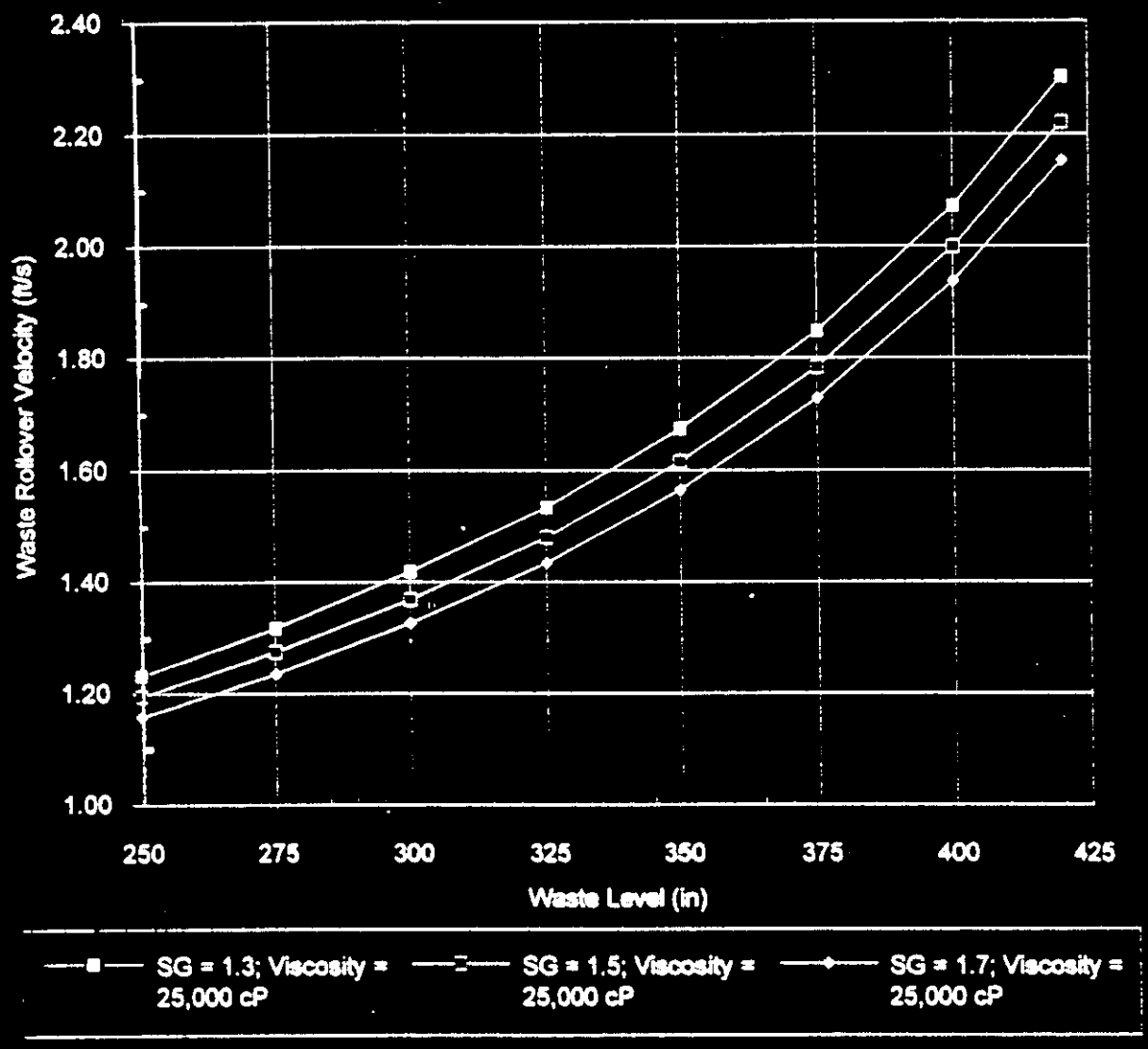

(WRCB.XLC)

ADVENT ENGINEERING SERVICES INC

Calculation Sheet

Project	WHC - Evaluation of Tank 241SY101 MIT Design for Other Tanks	Prepared By:	Date 10/18/95
Subject	Comparison of Tank/Waste Design Parameters	Reviewed By:	Date 10/19/95
System	Multifunction Instrument Tree (MIT)	Job No. 95010	File No. 95010.1.1
Client Calc. No.		Sheet No. 3-28	Rev. No. 0

Table 3.6.2-1. Maximum Waste Rollover Velocity vs. Waste Level (Case 1)

Specific gravity: 1.5
Absolute viscosity (cP): 25,000
Kinematic viscosity (ft^2/s): 0.17955

Waste level (in)	Waste rollover velocity (ft/s)	Reynold's Number	Cd [1]	Drag force (lbf/in)	Moment @ sampling port (in-lbf)
420	2.22	3.61	4.72	0.8232	13,059
400	2.00	3.25	5.07	0.7150	13,059
375	1.78	2.90	5.47	0.6141	13,059
350	1.61	2.62	5.84	0.5382	13,059
325	1.48	2.40	6.19	0.4790	13,059
300	1.37	2.22	6.52	0.4315	13,059
275	1.27	2.07	6.84	0.3926	13,059
250	1.19	1.94	7.16	0.3601	13,059

Notes:
1. Formula for Cd is valid for Reynold's Numbers between 0.1 and 5.

(WRD1.XLS)

ADVENT ENGINEERING SERVICES INC

Calculation Sheet

Project	WHC - Evaluation of Tank 241SY101 MIT Design for Other Tanks	Prepared By:	Date 10/18/95
Subject	Comparison of Tank/Waste Design Parameters	Reviewed By:	Date 10/19/95
System	Multifunction Instrument Tree (MIT)	Job No. 95010	File No. 95010.1.1
Client Calc. No.		Sheet No. 3-29	Rev. No. 0

Table 3.6.2-2. Maximum Waste Rollover Velocity vs. Waste Level (Case 2)

Specific gravity: 1.5
Absolute viscosity (cP): 10,000
Kinematic viscosity (ft^2/s): 0.07182

Waste level (in)	Waste rollover velocity (ft/s)	Reynold's Number	Cd [1]	Drag force (lbf/in)	Moment @ sampling port (in-lbf)
420	3.06	12.41	2.49	0.8232	13,059
400	2.79	11.33	2.60	0.7150	13,059
375	2.53	10.26	2.72	0.6141	13,059
350	2.32	9.41	2.83	0.5382	13,059
325	2.15	8.73	2.94	0.4790	13,059
300	2.01	8.15	3.03	0.4315	13,059
275	1.89	7.67	3.12	0.3926	13,059
250	1.78	7.25	3.20	0.3601	13,059

Notes:
1. Formula for Cd is valid for Reynold's Numbers between 2 and 20.

(WR02.XLS)

ADVENT ENGINEERING SERVICES, INC.

Calculation Sheet

Project	WHC - Evaluation of Tank 241SY101 MIT Design for Other Tanks	Prepared By:	Date 10/18/95
Subject	Comparison of Tank/Waste Design Parameters	Reviewed By:	Date 10/19/95
System	Multifunction Instrument Tree (MIT)	Job No. 95010	File No. 95010.1.1
Client Calc. No.		Sheet No. 3-30	Rev. No. 0

Table 3.6.2-3. Maximum Waste Rollover Velocity vs. Waste Level (Case 3)

Specific gravity: 1.7
Absolute viscosity (cP): 25,000
Kinematic viscosity (ft^2/s): 0.15843

Waste level (in)	Waste rollover velocity (ft/s)	Reynold's Number	Cd [1]	Drag force (lbf/in)	Moment @ sampling port (in-lbf)
420	2.15	3.96	4.44	0.8232	13,059
400	1.94	3.57	4.76	0.7150	13,059
375	1.73	3.18	5.14	0.6141	13,059
350	1.57	2.88	5.49	0.5382	13,059
325	1.43	2.64	5.82	0.4790	13,059
300	1.33	2.44	6.13	0.4315	13,059
275	1.24	2.27	6.42	0.3926	13,059
250	1.16	2.13	6.71	0.3601	13,059

Notes:
1. Formula for Cd is valid for Reynold's Numbers between 2 and 20.

ADVENT
ENGINEERING SERVICES INC

Calculation Sheet

Project	WHC - Evaluation of Tank 241SY101 MIT Design for Other Tanks	Prepared By:	Date 10/18/95
Subject	Comparison of Tank/Waste Design Parameters	Reviewed By:	Date 10/19/95
System	Multifunction Instrument Tree (MIT)	Job No. 95010	File No. 95010.1.1
Client Calc. No.		Sheet No. 3-31	Rev. No. 0

Table 3.6.2-4. Maximum Waste Rollover Velocity vs. Waste Level (Case 4)

Specific gravity: 1.3
Absolute viscosity (cP): 25,000
Kinematic viscosity (ft^2/s): 0.20717

Waste level (in)	Waste rollover velocity (ft/s)	Reynold's Number	Cd [1]	Drag force (lbf/in)	Moment @ sampling port (in-lbf)
420	2.30	3.24	5.07	0.8232	13,059
400	2.07	2.92	5.44	0.7150	13,059
375	1.85	2.60	5.87	0.6141	13,059
350	1.67	2.36	6.28	0.5382	13,059
325	1.53	2.16	6.65	0.4790	13,059
300	1.42	2.00	7.01	0.4315	13,059
275	1.32	1.85	7.39	0.3926	13,059
250	1.23	1.73	7.75	0.3601	13,059

Notes:
1. Formula for Cd is valid for Reynold's Numbers between 0.1 and 5.

(WRO4JLS)

ADVENT ENGINEERING SERVICES, INC.

Calculation Sheet

Project	WHC - Evaluation of Tank 241SY101 MIT Design for Other Tanks	Prepared By:	Date 10/18/95
Subject	Comparison of Tank/Waste Design Parameters	Reviewed By:	Date 10/19/95
System	Multifunction Instrument Tree (MIT)	Job No. 95010	File No. 95010.1.1
Client Calc. No.		Sheet No. 3-32	Rev. No. 0

Table 3.6.2-5. Maximum Waste Rollover Velocity vs. Waste Level (Case 5)

Specific gravity: 1.5
Absolute viscosity (cP): 17,500
Kinematic viscosity (ft^2/s): 0.12568

Waste level (in)	Waste rollover velocity (ft/s)	Reynold's Number	Cd [1]	Drag force (lbf/in)	Moment @ sampling port (in-lbf)
420	2.58	5.99	3.49	0.8232	13,059
400	2.36	5.47	3.65	0.7150	13,059
375	2.13	4.95	3.83	0.6141	13,059
350	1.93	4.48	4.09	0.5382	13,059
325	1.77	4.10	4.33	0.4790	13,059
300	1.64	3.80	4.57	0.4315	13,059
275	1.52	3.54	4.79	0.3926	13,059
250	1.43	3.31	5.00	0.3601	13,059

Notes:
1. Formula for Cd is valid for Reynold's Numbers between 2 and 20.

(WRC6JLB)

ADVENT ENGINEERING SERVICES INC

Calculation Sheet

Project	WHC - Evaluation of Tank 241SY101 MIT Design for Other Tanks	Prepared By:	Date 10/18/95
Subject	Comparison of Tank/Waste Design Parameters	Reviewed By:	Date 10/19/95
System	Multifunction Instrument Tree (MIT)	Job No. 95010	File No. 95010.1.1
Client Calc. No.		Sheet No. 3-33	Rev. No. 0

Figure 3.6.3-1. Maximum Allowable Mixing Pump Circulation Velocity Magnitude Profile

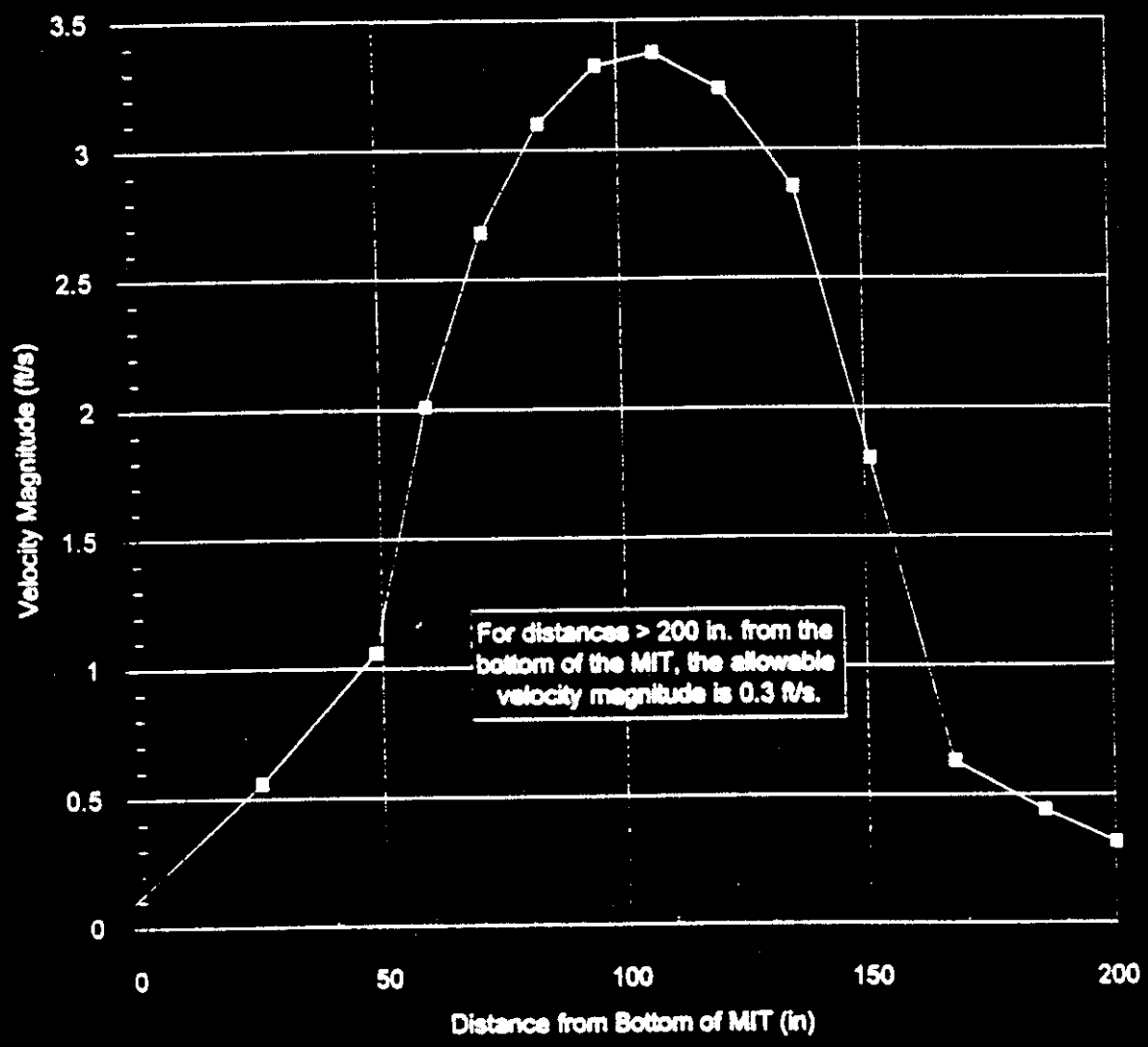

(MPCVEL.XLC)

ADVENT ENGINEERING SERVICES, INC.

Calculation Sheet

Project	WHC - Evaluation of Tank 241SY101 MIT Design for Other Tanks	Prepared By:	Date 10/18/95
Subject	Comparison of Tank/Waste Design Parameters	Reviewed By:	Date 10/19/95
System	Multifunction Instrument Tree (MIT)	Job No. 95010	File No. 95010.1.1
Client Calc. No.		Sheet No. 3-34	Rev. No. 0

Figure 3.6.5-1. Slosh Frequency and Equivalent Uniform Slosh Displacement at R = 28 ft vs. Waste Level

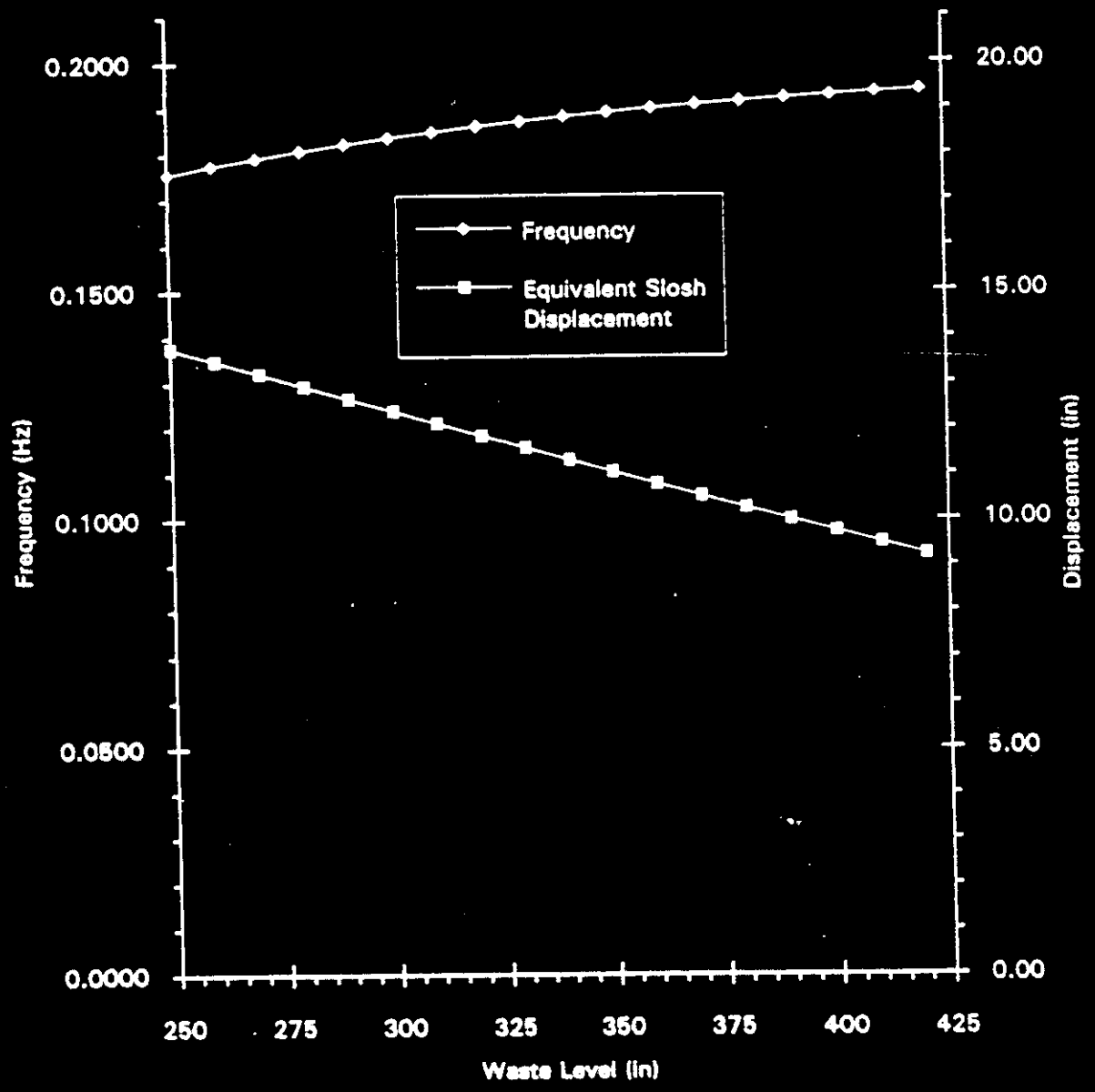

(SLOSHFRQ.XLC)

ADVENT ENGINEERING SERVICES, INC.

Calculation Sheet

Project	WHC - Evaluation of Tank 241SY101 MIT Design for Other Tanks	Prepared By:	Date 10/18/95
Subject	Comparison of Tank/Waste Design Parameters	Reviewed By:	Date 10/19/95
System	Multifunction Instrument Tree (MIT)	Job No. 95010	File No. 95010.1.1
Client Calc. No.		Sheet No. 3-35	Rev. No. 0

Table 3.6.5-1. 0.2 g DBE Slosh Parameters vs Waste Level

Waste Level (in)	Frequency (Hz)	s(2%) (g)	s(0.5%) (g)	d(maxv) (in)	d(maxh) (in)	d(minh) (in)	d(equiv) (in)	d(eq-28) (in)
250	0.1757	0.03762	0.04425	16.67	18.57	11.83	13.76	10.76
260	0.1775	0.03862	0.04519	17.02	18.58	11.46	13.49	10.54
270	0.1792	0.03937	0.04607	17.35	18.59	11.10	13.21	10.33
280	0.1808	0.04000	0.04689	17.66	18.59	10.74	12.93	10.11
290	0.1822	0.04074	0.04767	17.95	18.60	10.39	12.66	9.89
300	0.1836	0.04136	0.04839	18.23	18.60	10.04	12.38	9.68
310	0.1848	0.04192	0.04906	18.48	18.61	9.70	12.11	9.47
320	0.1860	0.04247	0.04968	18.72	18.61	9.37	11.84	9.26
330	0.1871	0.04297	0.05028	18.94	18.62	9.04	11.57	9.04
340	0.1881	0.04344	0.05082	19.14	18.62	8.73	11.30	8.83
350	0.1890	0.04387	0.05133	19.33	18.62	8.42	11.04	8.63
360	0.1898	0.04428	0.05180	19.51	18.63	8.11	10.77	8.42
370	0.1906	0.04465	0.05224	19.68	18.63	7.82	10.51	8.22
380	0.1914	0.04500	0.05265	19.83	18.63	7.54	10.25	8.01
390	0.1920	0.04532	0.05303	19.97	18.63	7.26	9.99	7.81
400	0.1927	0.04562	0.05338	20.10	18.64	6.99	9.73	7.61
410	0.1932	0.04590	0.05370	20.23	18.64	6.73	9.48	7.41
420	0.1938	0.04616	0.05400	20.34	18.64	6.48	9.22	7.21

(slosh1.xls)

Notes to Table 3.6.5-1

s(2%) (g) = 2%-damped SDC 4.1 0.2g spectral acceleration

s(0.5%) (g) = 0.5%-damped spectral acceleration (2%-damped values x 1.17)

d(maxv) (in) = max. vertical slosh displacement

d(maxh) (in) = max. horizontal slosh displacement (at tank center)

d(equiv) (in) = equivalent uniform displacement at tank center

d(eq-28) (in) = equivalent uniform displacement at 28 ft. tank radius

ADVENT ENGINEERING SERVICES INC

Calculation Sheet

Project WHC - Evaluation of Tank 241SY101 MIT Design for Other Tanks	Prepared By:	Date 10/18/95	
Subject Comparison of Tank/Waste Design Parameters	Reviewed By:	Date 10/19/95	
System Multifunction Instrument Tree (MIT)	Job No. 95010	File No. 95010.1.1	
Client Calc. No.	Sheet No. 4-1	Rev. No. 0	

4.0 BEYOND DESIGN BASIS CONSIDERATIONS

4.1 HYDROGEN BURN EVENT (H)

The SY-101 MIT was evaluated for possible ejection from the tank due to a hydrogen burn pressure of 70 lbf/in^2 (gauge) (ADVENT 1994). Therefore, based on the MIT design, the Hydrogen Burn Event loading is acceptable provided the following applicability requirements are satisfied:

- Hydrogen burn pressure $\leq$ 70 lbf/in^2 (gauge)
- Riser diameter $\leq$ 4 in
- MIT is bolted to the riser with the connection capable of accomodating a tensile load of 1760 lbf

4.2 DROP ANALYSIS

The drop analysis for the SY-101 MIT (ADVENT 1994) is based on a waste level of 400 inches with a Specific Gravity of 1.0 for the top 200 inches and a value of 1.7 for the bottom 200 inches. The effects of viscosity are eliminated because the analysis used a conservative drag coefficient of 1 based on the assumption of low viscosity. The SY-101 drop analysis shows that an impact velocity of 635.3 in/s is acceptable to avoid penetration of the MIT through the bottom of the tank.

Drop analyses are performed using the following program for a range of waste levels from 250 inches to 420 inches where for each run the specific gravity input value is iterated upon until the impact velocity is just less than the allowable of 635.3 in/s.

Table 4.2-1 and Figure 4.2-1 show the results of the drop analysis and provide the minimum specific gravity necessary for each waste level. For a given waste level, if the specific gravity for a given tank is less than the reported minimum required specific gravity, an impact limiter should be installed to limit the effects of a possible drop unless more detailed drop analyses can show otherwise.

ADVENT ENGINEERING SERVICES INC

Calculation Sheet

Project	WHC - Evaluation of Tank 241SY101 MIT Design for Other Tanks	Prepared By:	Date 10/18/95
Subject	Comparison of Tank/Waste Design Parameters	Reviewed By:	Date 10/19/95
System	Multifunction Instrument Tree (MIT)	Job No. 95010	File No. 95010.1.1
Client Calc. No.		Sheet No. 4-2	Rev. No. 0

```
      Program  Sink4

      Integer   Num,Nr
      REAL      Dis, Vel, Ve2, Acc, Acl, Ac2, Tim, Ti2, Xst
      Real      Drop, Mass, Blv, B2v, B2c, Dlv, D2v
      Real      Bdia, Area(20), Den(20), DD(20), pi
      Real      Spgl, Spg2, hl, h2

      Data pi/ 3.141592654 /

C
C   *** Input Parameters
C

      Write(*,*)' Enter Weight of Object in lb'
      Read(*,*) Mass

      Write(*,*)' Enter Initial Drop Height Above Fluid'
      Read(*,*) Drop

      Write(*,*)' Enter Bouyancy Diameter'
      Read(*,*) Bdia

      Write(*,*)' Enter Number of Effective Drag Plates'
      Read(*,*) NDD

      Write(*,*)' Enter Drag Plate Area & Distance From ',
     +'Entry End (in Pairs)'
      Read(*,*) (Area(I),Den(I),I=1,NDD)

      Write(*,*)' Enter Fluid Layer 1 Depth & Specific Gravity '
      Read (*,*) hl, Spgl

      Write(*,*)' Enter Fluid Layer 2 Depth & Specific Gravity '
      Read (*,*) h2, Spg2

      Write(*,*)' Print Every How Many Inches? '
      Read (*,*) Inc

C
C   *** Bouyancy Parameters Calculations
C
```


ADVENT
ENGINEERING SERVICES INC

Calculation Sheet

Project	WHC - Evaluation of Tank 241SY101 MIT Design for Other Tanks	Prepared By:	Date 10/18/95
Subject	Comparison of Tank/Waste Design Parameters	Reviewed By:	Date 10/19/95
System	Multifunction Instrument Tree (MIT)	Job No. 95010	File No. 95010.1.1
Client Calc. No.		Sheet No. 4-3	Rev. No. 0

```
      B1v = 0.0361 * pi * Bdia * Bdia / 4. * Spg1
      B2v = 0.0361 * pi * Bdia * Bdia / 4. * Spg2
      B2c = -(B2v - B1v) * h1

C
C   *** Drag Coefficient Parameters Calculations
C

      D1v = 0.5 * 62.4 / 1728. / 386.4 * pi /4. * Spg1
      D2v = 0.5 * 62.4 / 1728. / 386.4 * pi /4. * Spg2

C
C   *** Initial Conditions Setting/Calculations
C

      Dis =   0.0
      Tim =   0.0

      Mass= Mass / 386.4

      Vel = sqrt(2. * Drop * 386.4)

      Open(1,File='Sink4.Out')

      Write(1,101)Mass*386.4,Drop,Vel,h1,Spg1,h2,Spg2,h1+h2,Inc
  101 Format(1x,'Weight of Object        = ',F9.1,' lb',/
     +       1x,'Drop Height Above Fluid = ',F9.1,' in',/
     +       1x,'Velocity at Fluid Entry = ',F9.1,' in/s',/
     +       1x,'Fluid Layer 1 Depth     = ',F9.1,' in;',
     +       1x,'   Specific Gravity = ',F5.2,/
     +       1x,'Fluid Layer 2 Depth     = ',F9.1,' in;',
     +       1x,'   Specific Gravity = ',F5.2,/
     +       1x,'Total Fluid Depth       = ',F9.1,' in;',
     +       1x,'   Print Results Every ',I4,' in')

      Do I = 1, NDD
         DD(I) = sqrt( Area(I) * 4. / pi )
      Enddo

      Write(1,102)Bdia,NDD
  102 Format(1x,'Bouyancy Diameter       = ',F9.1,' in',/
     +       1x,'Number Of Drag Plates   = ',I9)
```


ADVENT
ENGINEERING SERVICES INC.

Calculation Sheet

Project	WHC - Evaluation of Tank 241SY101 MIT Design for Other Tanks	Prepared By:	Date 10/18/95
Subject	Comparison of Tank/Waste Design Parameters	Reviewed By:	Date 10/19/95
System	Multifunction Instrument Tree (MIT)	Job No. 95010	File No. 95010.1.1
Client Calc. No.		Sheet No. 4-4	Rev. No. 0

```
      Write(1,105)(I,Area(I),Den(I),I=1,NDD)
  105 Format(1x,'Plate ',I2,' Area = ',F10.3,' in^2;',
     +           '   Distance from Entry End = ',F9.2,' in')

      Acl =  Mass*386.4 - B1v*Dis
      Do I = 1, NDD
         If((Dis - Den(I)) .gt. -.1E-6) Then
            Acl = Acl - D1v*DD(I)*DD(I)*Vel*Vel
         Endif
      Enddo
      Acl = Acl / Mass

      Write(1,103)
      Write(1,104) Dis, Tim, Vel, Acl

  103 Format(/5x,'Distance',5x,'Time',5x,'Velocity',5x,'Acceleration'/)
  104 Format(5x,F7.0      ,F9.3     ,5x,F8.2      ,5x,F12.2          )

      Xst = 0.01
      Num = Ifix((h1 + h2) / Xst)
      Nr  = 100 * Inc

      Do II = 1, Num

         Dis = Dis + Xst
         Ti2 = Xst / Vel
         Tim = Tim + Ti2

         If(Dis .le. h1) Then
            Ac2 = Mass*386.4 - B1v*Dis
         Else
            Ac2 = Mass*386.4 - B2v*Dis - B2c
         Endif

         Do I = 1, NDD
            If((Dis - Den(I)) .gt. -.1E-6) Then
               If((Dis - Den(I)) .le. h1) Then
                  Ac2 = Ac2 - D1v*DD(I)*DD(I)*Vel*Vel
               Else
                  Ac2 = Ac2 - D2v*DD(I)*DD(I)*Vel*Vel
               Endif
            Endif
         Enddo
```


ADVENT
ENGINEERING SERVICES INC

Calculation Sheet

Project	WHC - Evaluation of Tank 241SY101 MIT Design for Other Tanks	Prepared By:	Date 10/18/95
Subject	Comparison of Tank/Waste Design Parameters	Reviewed By:	Date 10/19/95
System	Multifunction Instrument Tree (MIT)	Job No. 95010	File No. 95010.1.1
Client Calc. No.		Sheet No. 4-5	Rev. No. 0

```
      Ac2 = Ac2 / Mass
      Acc = (Ac1 + Ac2) / 2.
      Ve2 = Ve1 + Acc*Ti2
      If(Dis .le. h1) Then
         Ac2 = Mass*386.4 - B1v*Dis
      Else
         Ac2 = Mass*386.4 - B2v*Dis - B2c
      Endif

      Do I = 1, NDD
         If((Dis - Den(I)) .gt. -.1E-6) Then
            If((Dis - Den(I)) .le. h1) Then
               Ac2 = Ac2 - D1v*DD(I)*DD(I)*Ve2*Ve2
            Else
               Ac2 = Ac2 - D2v*DD(I)*DD(I)*Ve2*Ve2
            Endif
         Endif
      Enddo

      Ac2 = Ac2 / Mass

      If(II/Nr*Nr .eq. II) Write(1,104) Dis, Tim, Ve2, Ac2

      Ac1 = Ac2
      Ve1 = Ve2

   Enddo

   END
```


ADVENT ENGINEERING SERVICES, INC.

Calculation Sheet

Project	WHC - Evaluation of Tank 241SY101 MIT Design for Other Tanks	Prepared By:	Date 10/18/95
Subject	Comparison of Tank/Waste Design Parameters	Reviewed By:	Date 10/19/95
System	Multifunction Instrument Tree (MIT)	Job No. 95010	File No. 95010.1.1
Client Calc. No.		Sheet No. 4-6	Rev. No. 0

Weight of Object = 925.0 lb
Drop Height Above Fluid = 388.0 in
Velocity at Fluid Entry = 547.6 in/s
Fluid Layer 1 Depth = 125.0 in; Specific Gravity = 2.12
Fluid Layer 2 Depth = 125.0 in; Specific Gravity = 2.12
Total Fluid Depth = 250.0 in; Print Results Every 10 in
Bouyancy Diameter = 3.5 in
Number Of Drag Plates = 1
Plate 1 Area = 9.621 in^2; Distance from Entry End = .00 in

Distance	Time	Velocity	Acceleration
0.	.000	547.58	267.02
10.	.018	552.39	261.84
20.	.036	557.07	256.70
30.	.054	561.61	251.60
40.	.072	566.03	246.54
50.	.089	570.32	241.52
60.	.107	574.50	236.54
70.	.124	578.56	231.60
80.	.141	582.50	226.70
90.	.159	586.34	221.84
100.	.176	590.07	217.02
110.	.192	593.70	212.23
120.	.209	597.22	207.49
130.	.226	600.65	202.78
140.	.243	603.97	198.11
150.	.259	607.21	193.47
160.	.276	610.35	188.88
170.	.292	613.40	184.32
180.	.308	616.36	179.79
190.	.324	619.23	175.30
200.	.340	622.02	170.85
210.	.356	624.73	166.43
220.	.372	627.35	162.05
230.	.388	629.89	157.71
240.	.404	632.36	153.39
250.	.420	634.75	149.11

ADVENT ENGINEERING SERVICES, INC.

Calculation Sheet

Project	WHC - Evaluation of Tank 241SY101 MIT Design for Other Tanks	Prepared By:	Date 10/18/95
Subject	Comparison of Tank/Waste Design Parameters	Reviewed By:	Date 10/19/95
System	Multifunction Instrument Tree (MIT)	Job No. 95010	File No. 95010.1.1
Client Calc. No.		Sheet No. 4-7	Rev. No. 0

Weight of Object = 925.0 lb
Drop Height Above Fluid = 378.0 in
Velocity at Fluid Entry = 540.5 in/s
Fluid Layer 1 Depth = 130.0 in; Specific Gravity = 2.03
Fluid Layer 2 Depth = 130.0 in; Specific Gravity = 2.03
Total Fluid Depth = 260.0 in; Print Results Every 10 in
Bouyancy Diameter = 3.5 in
Number Of Drag Plates = 1
Plate 1 Area = 9.621 in^2; Distance from Entry End = .00 in

Distance	Time	Velocity	Acceleration
0.	.000	540.48	275.04
10.	.018	545.50	270.01
20.	.037	550.38	265.03
30.	.055	555.13	260.08
40.	.073	559.75	255.17
50.	.090	564.25	250.30
60.	.108	568.62	245.47
70.	.126	572.88	240.67
80.	.143	577.03	235.90
90.	.160	581.06	231.18
100.	.177	584.99	226.49
110.	.195	588.80	221.83
120.	.211	592.52	217.21
130.	.228	596.14	212.63
140.	.245	599.65	208.08
150.	.262	603.08	203.57
160.	.278	606.41	199.09
170.	.295	609.65	194.64
180.	.311	612.79	190.23
190.	.327	615.86	185.86
200.	.343	618.83	181.51
210.	.360	621.72	177.20
220.	.376	624.53	172.92
230.	.392	627.26	168.68
240.	.408	629.91	164.46
250.	.423	632.49	160.28
260.	.439	634.98	156.13

ADVENT
ENGINEERING SERVICES, INC.

Calculation Sheet

Project	WHC - Evaluation of Tank 241SY101 MIT Design for Other Tanks	Prepared By:	Date 10/18/95
Subject	Comparison of Tank/Waste Design Parameters	Reviewed By:	Date 10/19/95
System	Multifunction Instrument Tree (MIT)	Job No. 95010	File No. 95010.1.1
Client Calc. No.		Sheet No. 4-8	Rev. No. 0

Weight of Object = 925.0 lb
Drop Height Above Fluid = 368.0 in
Velocity at Fluid Entry = 533.3 in/s
Fluid Layer 1 Depth = 135.0 in; Specific Gravity = 1.96
Fluid Layer 2 Depth = 135.0 in; Specific Gravity = 1.96
Total Fluid Depth = 270.0 in; Print Results Every 10 in
Bouyancy Diameter = 3.5 in
Number Of Drag Plates = 1
Plate 1 Area = 9.621 in^2; Distance from Entry End = .00 in

Distance	Time	Velocity	Acceleration
0.	.000	533.28	281.72
10.	.019	538.49	276.82
20.	.037	543.56	271.96
30.	.055	548.50	267.13
40.	.074	553.31	262.34
50.	.092	557.99	257.58
60.	.109	562.54	252.86
70.	.127	566.98	248.17
80.	.145	571.29	243.52
90.	.162	575.50	238.90
100.	.179	579.60	234.31
110.	.197	583.59	229.76
120.	.214	587.47	225.24
130.	.231	591.26	220.75
140.	.248	594.94	216.30
150.	.264	598.53	211.89
160.	.281	602.02	207.50
170.	.298	605.42	203.15
180.	.314	608.74	198.82
190.	.330	611.95	194.53
200.	.347	615.09	190.27
210.	.363	618.14	186.05
220.	.379	621.11	181.85
230.	.395	624.00	177.69
240.	.411	626.81	173.55
250.	.427	629.54	169.45
260.	.443	632.19	165.37
270.	.459	634.77	161.32

ADVENT
ENGINEERING SERVICES INC

Calculation Sheet

Project	WHC - Evaluation of Tank 241SY101 MIT Design for Other Tanks	Prepared By: [signature]	Date 10/18/95
Subject	Comparison of Tank/Waste Design Parameters	Reviewed By: [signature]	Date 10/19/95
System	Multifunction Instrument Tree (MIT)	Job No. 95010	File No. 95010.1.1
Client Calc. No.		Sheet No. 4-9	Rev. No. 0

Weight of Object = 925.0 lb
Drop Height Above Fluid = 358.0 in
Velocity at Fluid Entry = 526.0 in/s
Fluid Layer 1 Depth = 140.0 in; Specific Gravity = 1.89
Fluid Layer 2 Depth = 140.0 in; Specific Gravity = 1.89
Total Fluid Depth = 280.0 in; Print Results Every 10 in
Bouyancy Diameter = 3.5 in
Number Of Drag Plates = 1
Plate 1 Area = 9.621 in^2; Distance from Entry End = .00 in

Distance	Time	Velocity	Acceleration
0.	.000	525.99	288.20
10.	.019	531.39	283.43
20.	.038	536.66	278.69
30.	.056	541.78	273.99
40.	.075	546.77	269.32
50.	.093	551.63	264.68
60.	.111	556.37	260.08
70.	.129	560.99	255.51
80.	.146	565.48	250.97
90.	.164	569.86	246.46
100.	.182	574.13	241.98
110.	.199	578.29	237.54
120.	.216	582.35	233.12
130.	.233	586.30	228.74
140.	.250	590.15	224.39
150.	.267	593.90	220.07
160.	.284	597.56	215.79
170.	.301	601.13	211.53
180.	.317	604.60	207.30
190.	.334	607.99	203.11
200.	.350	611.28	198.94
210.	.366	614.49	194.80
220.	.383	617.63	190.69
230.	.399	620.67	186.61
240.	.415	623.64	182.56
250.	.431	626.53	178.54
260.	.447	629.34	174.54
270.	.463	632.07	170.57
280.	.478	634.73	166.63

ADVENT
ENGINEERING SERVICES, INC.

Calculation Sheet

Project	WHC - Evaluation of Tank 241SY101 MIT Design for Other Tanks	Prepared By:	Date 10/18/95
Subject	Comparison of Tank/Waste Design Parameters	Reviewed By:	Date 10/19/95
System	Multifunction Instrument Tree (MIT)	Job No. 95010	File No. 95010.1.1
Client Calc. No.		Sheet No. 4-10	Rev. No. 0

```
Weight of Object        =     925.0 lb
Drop Height Above Fluid =     348.0 in
Velocity at Fluid Entry =     518.6 in/s
Fluid Layer 1 Depth     =     145.0 in;    Specific Gravity =  1.82
Fluid Layer 2 Depth     =     145.0 in;    Specific Gravity =  1.82
Total Fluid Depth       =     290.0 in;    Print Results Every   10 in
Bouyancy Diameter       =       3.5 in
Number Of Drag Plates   =         1
Plate  1 Area =      9.621 in^2;   Distance from Entry End =       .00 in
```

Distance	Time	Velocity	Acceleration
0.	.000	518.59	294.48
10.	.019	524.19	289.84
20.	.038	529.65	285.24
30.	.057	534.96	280.66
40.	.076	540.14	276.12
50.	.094	545.19	271.61
60.	.112	550.11	267.12
70.	.130	554.91	262.67
80.	.148	559.58	258.25
90.	.166	564.14	253.86
100.	.184	568.58	249.50
110.	.201	572.91	245.17
120.	.219	577.14	240.86
130.	.236	581.26	236.59
140.	.253	585.28	232.35
150.	.270	589.20	228.14
160.	.287	593.02	223.95
170.	.304	596.76	219.80
180.	.321	600.39	215.67
190.	.337	603.94	211.57
200.	.354	607.40	207.50
210.	.370	610.77	203.45
220.	.386	614.06	199.44
230.	.403	617.27	195.45
240.	.419	620.40	191.49
250.	.435	623.44	187.55
260.	.451	626.41	183.64
270.	.467	629.30	179.76
280.	.483	632.13	175.90
290.	.498	634.87	172.07

ADVENT
ENGINEERING SERVICES INC

Calculation Sheet

Project	WHC - Evaluation of Tank 241SY101 MIT Design for Other Tanks	Prepared By:	Date 10/18/95
Subject	Comparison of Tank/Waste Design Parameters	Reviewed By:	Date 10/19/95
System	Multifunction Instrument Tree (MIT)	Job No. 95010	File No. 95010.1.1
Client Calc. No.		Sheet No. 4-11	Rev. No. 0

Weight of Object = 925.0 lb
Drop Height Above Fluid = 338.0 in
Velocity at Fluid Entry = 511.1 in/s
Fluid Layer 1 Depth = 150.0 in; Specific Gravity = 1.76
Fluid Layer 2 Depth = 150.0 in; Specific Gravity = 1.76
Total Fluid Depth = 300.0 in; Print Results Every 10 in
Bouyancy Diameter = 3.5 in
Number Of Drag Plates = 1
Plate 1 Area = 9.621 in^2; Distance from Entry End = .00 in

Distance	Time	Velocity	Acceleration
0.	.000	511.08	300.07
10.	.019	516.88	295.54
20.	.039	522.52	291.05
30.	.058	528.02	286.59
40.	.077	533.38	282.15
50.	.095	538.60	277.75
60.	.114	543.69	273.38
70.	.132	548.66	269.03
80.	.150	553.50	264.71
90.	.168	558.23	260.42
100.	.186	562.84	256.16
110.	.204	567.33	251.93
120.	.221	571.71	247.72
130.	.239	576.00	243.54
140.	.256	580.17	239.40
150.	.273	584.25	235.28
160.	.290	588.23	231.18
170.	.307	592.11	227.11
180.	.324	595.90	223.07
190.	.341	599.60	219.06
200.	.357	603.21	215.07
210.	.374	606.73	211.11
220.	.390	610.17	207.18
230.	.407	613.52	203.27
240.	.423	616.79	199.39
250.	.439	619.99	195.53
260.	.455	623.10	191.69
270.	.471	626.14	187.89
280.	.487	629.10	184.10
290.	.503	631.99	180.34
300.	.519	634.81	176.60

ADVENT
ENGINEERING SERVICES INC

Calculation Sheet

Project	WHC - Evaluation of Tank 241SY101 MIT Design for Other Tanks	Prepared By:	Date 10/18/95
Subject	Comparison of Tank/Waste Design Parameters	Reviewed By:	Date 10/19/95
System	Multifunction Instrument Tree (MIT)	Job No. 95010	File No. 95010.1.1
Client Calc. No.		Sheet No. 4-12	Rev. No. 0

Weight of Object = 925.0 lb
Drop Height Above Fluid = 318.0 in
Velocity at Fluid Entry = 495.7 in/s
Fluid Layer 1 Depth = 160.0 in; Specific Gravity = 1.65
Fluid Layer 2 Depth = 160.0 in; Specific Gravity = 1.65
Total Fluid Depth = 320.0 in; Print Results Every 10 in
Bouyancy Diameter = 3.5 in
Number Of Drag Plates = 1
Plate 1 Area = 9.621 in^2; Distance from Entry End = .00 in

Distance	Time	Velocity	Acceleration
0.	.000	495.73	310.25
10.	.020	501.91	305.95
20.	.040	507.93	301.67
30.	.059	513.79	297.42
40.	.079	519.51	293.20
50.	.098	525.08	289.00
60.	.117	530.51	284.83
70.	.136	535.82	280.68
80.	.154	540.99	276.56
90.	.173	546.04	272.46
100.	.191	550.97	268.39
110.	.209	555.78	264.35
120.	.227	560.49	260.33
130.	.245	565.08	256.33
140.	.262	569.56	252.36
150.	.280	573.94	248.42
160.	.297	578.22	244.50
170.	.314	582.40	240.60
180.	.331	586.48	236.73
190.	.348	590.47	232.88
200.	.365	594.37	229.06
210.	.382	598.18	225.26
220.	.399	601.90	221.48
230.	.415	605.54	217.73
240.	.432	609.10	214.00
250.	.448	612.57	210.29
260.	.464	615.96	206.61
270.	.481	619.28	202.94
280.	.497	622.52	199.30
290.	.513	625.68	195.68
300.	.529	628.77	192.08
310.	.545	631.79	188.51
320.	.560	634.74	184.95

ADVENT
ENGINEERING SERVICES, INC

Calculation Sheet

Project	WHC - Evaluation of Tank 241SY101 MIT Design for Other Tanks	Prepared By: [illegible]	Date 10/18/95
Subject	Comparison of Tank/Waste Design Parameters	Reviewed By: [illegible]	Date 10/19/95
System	Multifunction Instrument Tree (MIT)	Job No. 95010	File No. 95010.1.1
Client Calc. No.		Sheet No. 4-13	Rev. No. 0

```
Weight of Object          =     925.0 lb
Drop Height Above Fluid =     298.0 in
Velocity at Fluid Entry =     479.9 in/s
Fluid Layer 1 Depth       =     170.0 in;    Specific Gravity =  1.55
Fluid Layer 2 Depth       =     170.0 in;    Specific Gravity =  1.55
Total Fluid Depth         =     340.0 in;    Print Results Every   10 in
Bouyancy Diameter         =       3.5 in
Number Of Drag Plates     =         1
Plate  1 Area =      9.621 in^2;   Distance from Entry End =       .00 in
```

Distance	Time	Velocity	Acceleration
0.	.000	479.89	319.36
10.	.021	486.46	315.27
20.	.041	492.85	311.20
30.	.061	499.09	307.15
40.	.081	505.17	303.12
50.	.101	511.09	299.12
60.	.120	516.87	295.14
70.	.140	522.51	291.19
80.	.159	528.02	287.25
90.	.177	533.39	283.34
100.	.196	538.64	279.46
110.	.215	543.77	275.59
120.	.233	548.78	271.75
130.	.251	553.68	267.93
140.	.269	558.46	264.13
150.	.287	563.14	260.36
160.	.305	567.71	256.61
170.	.322	572.18	252.87
180.	.339	576.55	249.17
190.	.357	580.82	245.48
200.	.374	585.00	241.81
210.	.391	589.09	238.17
220.	.408	593.09	234.54
230.	.425	597.00	230.94
240.	.441	600.82	227.36
250.	.458	604.57	223.80
260.	.474	608.23	220.26
270.	.491	611.81	216.74
280.	.507	615.31	213.23
290.	.523	618.75	209.75
300.	.539	622.10	206.29
310.	.556	625.37	202.85
320.	.571	628.58	199.42
330.	.587	631.72	196.02
340.	.603	634.79	192.64

ADVENT
ENGINEERING SERVICES, INC.

Calculation Sheet

Project	WHC - Evaluation of Tank 241SY101 MIT Design for Other Tanks	Prepared By:	Date 10/18/95
Subject	Comparison of Tank/Waste Design Parameters	Reviewed By:	Date 10/19/95
System	Multifunction Instrument Tree (MIT)	Job No. 95010	File No. 95010.1.1
Client Calc. No.		Sheet No. 4-14	Rev. No. 0

Weight of Object = 925.0 lb
Drop Height Above Fluid = 278.0 in
Velocity at Fluid Entry = 463.5 in/s
Fluid Layer 1 Depth = 180.0 in; Specific Gravity = 1.46
Fluid Layer 2 Depth = 180.0 in; Specific Gravity = 1.46
Total Fluid Depth = 360.0 in; Print Results Every 10 in
Bouyancy Diameter = 3.5 in
Number Of Drag Plates = 1
Plate 1 Area = 9.621 in^2; Distance from Entry End = .00 in

Distance	Time	Velocity	Acceleration
0.	.000	463.51	327.49
10.	.021	470.48	323.59
20.	.043	477.27	319.71
30.	.063	483.88	315.85
40.	.084	490.32	312.01
50.	.104	496.61	308.19
60.	.124	502.74	304.39
70.	.144	508.72	300.62
80.	.163	514.56	296.86
90.	.183	520.26	293.12
100.	.202	525.82	289.41
110.	.221	531.26	285.71
120.	.240	536.58	282.04
130.	.258	541.78	278.38
140.	.276	546.86	274.75
150.	.295	551.83	271.13
160.	.313	556.69	267.54
170.	.331	561.44	263.97
180.	.348	566.09	260.41
190.	.366	570.64	256.88
200.	.383	575.09	253.36
210.	.401	579.45	249.86
220.	.418	583.72	246.38
230.	.435	587.90	242.93
240.	.452	591.99	239.49
250.	.469	595.99	236.07
260.	.485	599.91	232.66
270.	.502	603.74	229.27
280.	.519	607.50	225.91
290.	.535	611.18	222.56
300.	.551	614.79	219.22
310.	.568	618.31	215.91
320.	.584	621.77	212.62
330.	.600	625.15	209.34
340.	.616	628.47	206.08
350.	.632	631.72	202.84
360.	.647	634.90	199.61

ADVENT
ENGINEERING SERVICES, INC.

Calculation Sheet

Project	WHC - Evaluation of Tank 241SY101 MIT Design for Other Tanks	Prepared By:	Date 10/18/95
Subject	Comparison of Tank/Waste Design Parameters	Reviewed By:	Date 10/19/95
System	Multifunction Instrument Tree (MIT)	Job No. 95010	File No. 95010.1.1
Client Calc. No.		Sheet No. 4-15	Rev. No. 0

```
Weight of Object        =     925.0 lb
Drop Height Above Fluid =     258.0 in
Velocity at Fluid Entry =     446.5 in/s
Fluid Layer 1 Depth     =     190.0 in;    Specific Gravity =  1.38
Fluid Layer 2 Depth     =     190.0 in;    Specific Gravity =  1.38
Total Fluid Depth       =     380.0 in;    Print Results Every   10 in
Bouyancy Diameter       =       3.5 in
Number Of Drag Plates   =         1
Plate  1 Area =      9.621 in^2;   Distance from Entry End =       .00 in
```

Distance	Time	Velocity	Acceleration
0.	.000	446.52	334.73
10.	.022	453.92	331.00
20.	.044	461.11	327.29
30.	.066	468.12	323.60
40.	.087	474.94	319.93
50.	.108	481.59	316.28
60.	.128	488.08	312.65
70.	.149	494.40	309.04
80.	.169	500.58	305.44
90.	.189	506.61	301.87
100.	.208	512.50	298.31
110.	.228	518.25	294.77
120.	.247	523.87	291.25
130.	.266	529.37	287.74
140.	.285	534.75	284.26
150.	.303	540.00	280.80
160.	.322	545.15	277.35
170.	.340	550.18	273.92
180.	.358	555.11	270.51
190.	.376	559.93	267.11
200.	.394	564.65	263.73
210.	.411	569.27	260.38
220.	.429	573.80	257.03
230.	.446	578.23	253.71
240.	.463	582.57	250.40
250.	.481	586.83	247.11
260.	.498	591.00	243.84
270.	.514	595.08	240.58
280.	.531	599.08	237.33
290.	.548	603.00	234.11
300.	.564	606.85	230.90
310.	.581	610.61	227.71
320.	.597	614.30	224.53
330.	.613	617.92	221.37
340.	.629	621.47	218.23
350.	.646	624.95	215.10
360.	.661	628.35	211.99
370.	.677	631.69	208.89
380.	.693	634.97	205.82

ADVENT ENGINEERING SERVICES, INC.

Calculation Sheet

Project	WHC - Evaluation of Tank 241SY101 MIT Design for Other Tanks	Prepared By: T. Neil Clutter	Date 10/18/95
Subject	Comparison of Tank/Waste Design Parameters	Reviewed By: 4 P Day	Date 10/19/95
System	Multifunction Instrument Tree (MIT)	Job No. 95010	File No. 95010.1.1
Client Calc. No.		Sheet No. 4-16	Rev. No. 0

Weight of Object = 925.0 lb
Drop Height Above Fluid = 238.0 in
Velocity at Fluid Entry = 428.9 in/s
Fluid Layer 1 Depth = 200.0 in; Specific Gravity = 1.31
Fluid Layer 2 Depth = 200.0 in; Specific Gravity = 1.31
Total Fluid Depth = 400.0 in; Print Results Every 10 in
Bouyancy Diameter = 3.5 in
Number Of Drag Plates = 1
Plate 1 Area = 9.621 in^2; Distance from Entry End = .00 in

Distance	Time	Velocity	Acceleration
0.	.000	428.87	341.15
10.	.023	436.71	337.58
20.	.046	444.33	334.03
30.	.068	451.75	330.49
40.	.090	458.97	326.97
50.	.112	466.00	323.47
60.	.133	472.85	319.99
70.	.154	479.54	316.52
80.	.175	486.06	313.07
90.	.195	492.42	309.64
100.	.215	498.63	306.22
110.	.235	504.70	302.83
120.	.255	510.64	299.44
130.	.274	516.43	296.08
140.	.294	522.10	292.73
150.	.313	527.65	289.40
160.	.332	533.07	286.08
170.	.350	538.38	282.78
180.	.369	543.58	279.50
190.	.387	548.67	276.23
200.	.405	553.65	272.98
210.	.423	558.53	269.75
220.	.441	563.31	266.53
230.	.459	567.99	263.33
240.	.476	572.59	260.14
250.	.494	577.08	256.97
260.	.511	581.49	253.81
270.	.528	585.81	250.67
280.	.545	590.05	247.34
290.	.562	594.20	244.42
300.	.579	598.27	241.33
310.	.595	602.27	238.25
320.	.612	606.19	235.18
330.	.628	610.03	232.13
340.	.645	613.80	229.09
350.	.661	617.49	226.07
360.	.677	621.12	223.06
370.	.693	624.68	220.07
380.	.709	628.17	217.09
390.	.725	631.59	214.12
400.	.741	634.95	211.18

ADVENT
ENGINEERING SERVICES, INC.

Calculation Sheet

Project	WHC - Evaluation of Tank 241SY101 MIT Design for Other Tanks	Prepared By:	Date 10/19/95
Subject	Comparison of Tank/Waste Design Parameters	Reviewed By:	Date 10/19/95
System	Multifunction Instrument Tree (MIT)	Job No. 95010	File No. 95010.1.1
Client Calc. No.		Sheet No. 4-17	Rev. No. 0

Weight of Object = 925.0 lb
Drop Height Above Fluid = 218.0 in
Velocity at Fluid Entry = 410.5 in/s
Fluid Layer 1 Depth = 210.0 in; Specific Gravity = 1.25
Fluid Layer 2 Depth = 210.0 in; Specific Gravity = 1.25
Total Fluid Depth = 420.0 in; Print Results Every 10 in
Bouyancy Diameter = 3.5 in
Number Of Drag Plates = 1
Plate 1 Area = 9.621 in^2; Distance from Entry End = .00 in

Distance	Time	Velocity	Acceleration
0.	.000	410.45	346.85
10.	.024	418.78	343.42
20.	.048	426.86	340.00
30.	.071	434.71	336.60
40.	.094	442.35	333.21
50.	.116	449.78	329.84
60.	.138	457.02	326.49
70.	.160	464.07	323.15
80.	.181	470.95	319.83
90.	.202	477.66	316.52
100.	.223	484.20	313.23
110.	.244	490.60	309.95
120.	.264	496.84	306.69
130.	.284	502.94	303.44
140.	.304	508.91	300.21
150.	.323	514.74	297.00
160.	.343	520.45	293.80
170.	.362	526.04	290.61
180.	.381	531.50	287.44
190.	.399	536.85	284.29
200.	.418	542.09	281.15
210.	.436	547.22	278.03
220.	.454	552.26	274.91
230.	.472	557.18	271.82
240.	.490	562.01	268.74
250.	.508	566.74	265.67
260.	.526	571.39	262.62
270.	.543	575.94	259.58
280.	.560	580.40	256.55
290.	.578	584.78	253.54
300.	.595	589.07	250.54
310.	.612	593.29	247.55
320.	.628	597.42	244.58
330.	.645	601.47	241.63
340.	.662	605.46	238.68
350.	.678	609.36	235.75
360.	.694	613.19	232.84
370.	.711	616.95	229.94
380.	.727	620.64	227.05
390.	.743	624.27	224.17
400.	.759	627.83	221.31
410.	.775	631.32	218.46
420.	.791	634.75	215.63

ADVENT
ENGINEERING SERVICES INC

Calculation Sheet

Project	WHC - Evaluation of Tank 241SY101 MIT Design for Other Tanks	Prepared By:	Date 10/19/95
Subject	Comparison of Tank/Waste Design Parameters	Reviewed By:	Date 10/19/95
System	Multifunction Instrument Tree (MIT)	Job No. 95010	File No. 95010.1.1
Client Calc. No.		Sheet No. 4-18	Rev. No. 0

Figure 4.2-1. Minimum Specific Gravity for Drop Analysis vs Waste Level

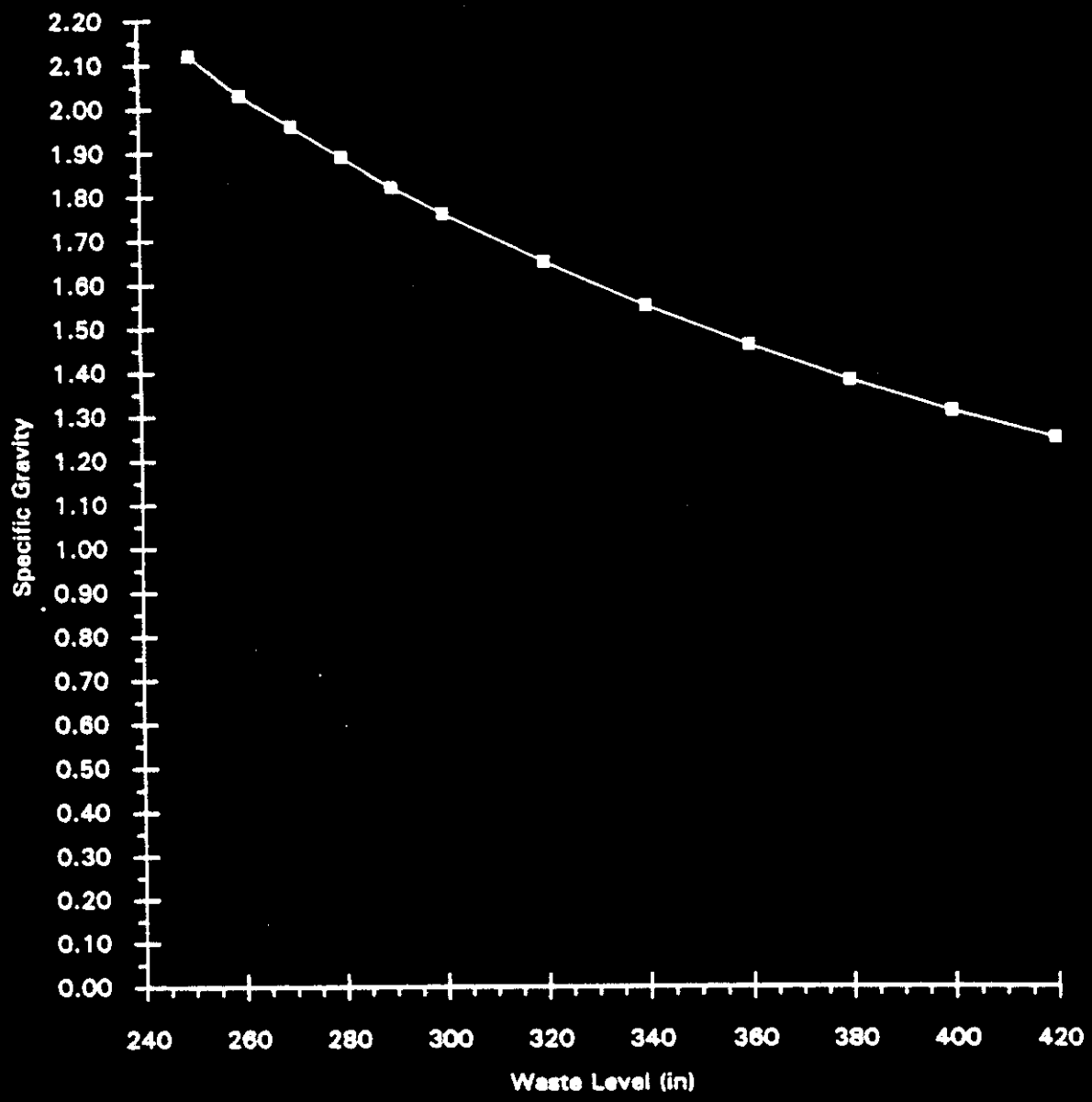

[DROP.XLC]

ADVENT ENGINEERING SERVICES, INC.

Calculation Sheet

Project	WHC - Evaluation of Tank 241SY101 MIT Design for Other Tanks	Prepared By:	Date 10/19/95
Subject	Comparison of Tank/Waste Design Parameters	Reviewed By:	Date 10/19/95
System	Multifunction Instrument Tree (MIT)	Job No. 95010	File No. 95010.1.1
Client Calc. No.		Sheet No. 4-19	Rev. No. 0

Table 4.2-1. Minimum Specific Gravity for Drop Analysis vs Waste Level

Waste Level (in)	Specific Gravity
250	2.12
260	2.03
270	1.96
280	1.89
290	1.82
300	1.76
320	1.65
340	1.55
360	1.46
380	1.38
400	1.31
420	1.25

(drop.xls)

ADVENT ENGINEERING SERVICES, INC.

Project: WHC - Evaluation of Tank 241SY101 MIT Design for Other Tanks	Prepared By: [illegible]	Date: 11/14/95	
Subject: Comparison of Tank/Waste Design Parameters	Reviewed By: R. BALIGA	Date: 11/15/95	
System: Multifunction Instrument Tree (MIT)	Job No.: 95010	File No.: 95010.1.1	
Client Calc. No.	Sheet No.: 5-1	Rev. No.: 2	

5.0 CONCLUSIONS

This study is a generic assessment that identifies limiting parameters (or applicability requirements), associated with the waste and the MIT structure, based on the SY-101 MIT design and drop analysis, which will allow a cognizant engineer to determine the acceptability of the existing MIT design for use in other tanks.

Therefore, a MIT design similar to the SY-101 MIT design is considered acceptable for use in other tanks provided the following applicability requirements are satisfied:

Tank and Riser Configuration

- Tank diameter = 75 ft
- Distance of riser bottom lip above tank floor ≤ 42.5 ft [1]
- Length of riser ≤ 14 ft
- Unsupported length of riser above the soil surface ≤ 2.5 ft
- MIT location dome thickness ≥ 15 in
- MIT location dome reinforcement ≥ #6 at 10 in. on center (top and bottom, both directions)
- Rebar yield strength = 60,000 lbf/in^2
- Dome concrete strength ≥ 4,500 lbf/in^2.
- Riser is 4" Schedule 40 pipe of material with a minimum yield stress greater than or equal to 30.0 kip/in^2.

MIT Installation (Riser Locations and Dimensions)

- Radial distance from the center of the tank to the MIT ≥ 28 ft
- Distance of riser bottom lip above tank floor ≤ 42.5 ft [1]

ADVENT ENGINEERING SERVICES, INC.

Project: WHC - Evaluation of Tank 241SY101 MIT Design for Other Tanks	Prepared By: AP Bay	Date: 11/14/95	
Subject: Comparison of Tank/Waste Design Parameters	Reviewed By: R. BALIGA	Date: 11/15/95	
System: Multifunction Instrument Tree (MIT)	Job No. 95010	File No. 95010.1.1	
Client Calc. No.	Sheet No. 5-2	Rev. No. 2	

MIT Configuration [2]

- Total MIT assembly weight ≤ 925 lbf
- Uniform MIT weight below riser flange connection ≤ 525 lbf
- Probe head weight ≤ 400 lbf
- Distance of probe head c.g. above riser flange connection ≤ 4 ft
- Nominal MIT outer tube outside diameter = 3.5 in
- Nominal MIT outer tube wall thickness = 0.1875 in
- MIT outer tube material is seamless stainless steel with a minimum yield stress of 30.0 kip/in^2
- Sampling port cutout circumferential dimension ≤ 0.6 in
- Distance from thermocouple patch edge to bottom of riser lip ≥ 73 in
- Thermocouple patch (arc) chord dimension ≤ 1.25 in (or circumferential dimension ≤ 1.28 in)
- Circumferential weld flaw size ≤ 0.625 in. long and ≤ 0.04 in. deep
- Wall thickness removal due to backing ring milling ≤ 0.023 in
- Full circumferential weld flaw size ≤ 0.032 in. deep

Waste and Gas Volume Temperatures

- Gas volume temperature ≤ 110 °F
- Waste temperature ≤ 140 °F.

ADVENT ENGINEERING SERVICES, INC.

Project: WHC - Evaluation of Tank 241SY101 MIT Design for Other Tanks	Prepared By: [illegible]	Date: 11/14/95	
Subject: Comparison of Tank/Waste Design Parameters	Reviewed By: R. AALIGA	Date: 11/15/95	
System: Multifunction Instrument Tree (MIT)	Job No. 95010	File No. 95010.1.1	
Client Calc. No.	Sheet No. 5-3	Rev. No. 2	

Deadweight Loads

- Total MIT assembly weight ≤ 925 lbf
- Uniform MIT weight below riser flange connection ≤ 525 lbf
- Probe head weight above riser ≤ 400 lbf

Waste Rollover Loads

- The maximum waste velocity over the top 10 feet of waste is to be enveloped by the applicable value from Figure 3.6.2-1 and Figure 3.6.2-2 with effectively zero velocity below the 10 foot depth or the maximum bending moment at the riser lip caused by the forces associated with the velocity distribution must not exceed 13,487 in-lbf.
- 250 inches ≤ waste level ≤ 420 inches

Mixing Pump Circulation Loads

- Velocity profile enveloped by Figure 3.6.3-1, specific gravity ≤ 1.7 and mixed viscosity ≤ 500 centipoise or the maximum bending moment at the riser lip caused by the forces associated with the velocity distribution must not exceed 17,686 lb-in
- 250 inches ≤ waste level ≤ 420 inches
- Unless it can be verified, through in-situ tests, that vortex shedding is not present:

  -Mode 1 strain amplitude (½ range) ≤ 189 microstrain (at riser lip)

  -Mode 2 strain amplitude (½ range) ≤ 139 microstrain (at riser lip) for flow velocity in excess of the mode 2 "lock-in" velocity of 1.9 ft/s

Project: WHC - Evaluation of Tank 241SY101 MIT Design for Other Tanks	Prepared By: [illegible]	Date: 11/14/95	
Subject: Comparison of Tank/Waste Design Parameters	Reviewed By: R. BALIGA	Date: 11/15/95	
System: Multifunction Instrument Tree (MIT)	Job No. 95010	File No. 95010.1.1	
Client Calc. No.	Sheet No. 5-4	Rev. No. 2	

Design Basis Earthquake Loads

- A seismic design basis, enveloped by or equivalent to the SDC-4.1 Figure 3 response spectrum - 0.2 *g* (5% critical damping)
- 250 inches ≤ waste level ≤ 420 inches
- Specific gravity ≤ 1.7
- Viscosity ≤ 25,000 centipoise.

Waste Sloshing Loads

- A seismic design basis, enveloped by or equivalent to the SDC-4.1 Figure 3 response spectrum - 0.2 *g* (2% critical damping), which is scaled to obtain spectral values at 0.5 % critical damping
- 250 inches ≤ waste level ≤ 420 inches
- Specific gravity ≤ 1.7
- Viscosity ≤ 25,000 centipoise.

Hydrogen Burn Event Loads

- Hydrogen burn pressure ≤ 70 lbf/in^2 (gauge)
- Riser diameter ≤ 4 in
- MIT is bolted to the riser with the connection capable of accomodating a tensile load of 1760 lbf

Project: WHC - Evaluation of Tank 241SY101 MIT Design for Other Tanks	Prepared By:	Date: 11/14/95	
Subject: Comparison of Tank/Waste Design Parameters	Reviewed By: R. BALIGA	Date: 11/15/95	
System: Multifunction Instrument Tree (MIT)	Job No. 95010	File No. 95010.1.1	
Client Calc. No.	Sheet No. 5-5	Rev. No. 2	

Drop Analysis

- Table 4.2-1 and Figure 4.2-1 show the results of the drop analysis and provide the minimum specific gravity necessary for each waste level. For a given waste level, if the specific gravity for a given tank is less than the reported minimum required specific gravity, an impact limiter should be installed to limit the effects of a possible drop unless a more detailed drop analysis can show otherwise.

Notes:

1. It is conservatively estimated that an increase in MIT length below the riser lip from the as-modeled dimension of 41.43 ft to 42.5 ft increases demand-capacity ratios by no more than 5 percent.

2. Previous restrictions governing placement of a gas sampling port near the riser lip have been lifted. A sampling port located at the riser lip affects previously documented calculations as follows:

   The maximum bending stress at the gas sampling port increases due to an increase in bending moment (evaluation of the MIT at a gas sampling port was previously based on the bending moment calculated 5 in. below the riser lip). For the controlling load combination, the bending moment increases only 2.2% (39,818 versus 38,969 in-lbf as shown on Sheet E-18 of ADVENT 1994). Considering this increased bending moment cumulatively with the effect of increased MIT length, demand-capacity ratios are still comfortably less than one.

   Local contact stresses as calculated on Sheets 8-12 and 8-13 of ADVENT 1994 are increased due to the presence of the sampling port at the point of contact. Owing to the large factor of safety (25) calculated in ADVENT 1994, increased contact stresses are of no concern. Local deformation of the MIT at the point of contact will reduce the net section modulus to a negligible degree.

Project	WHC - Evaluation of Tank 241SY101 MIT Design for Other Tanks	Prepared By:	Date 10/19/95
Subject	Comparison of Tank/Waste Design Parameters	Reviewed By:	Date 10/19/95
System	Multifunction Instrument Tree (MIT)	Job No. 95010	File No. 95010.1.1
Client Calc. No.		Sheet No. 6-1	Rev. No. 0

6.0 REFERENCES

ADVENT, 1994, *Structural Evaluation of MIT and Riser Assembly*, Calculation 90005.9.1, Rev. 5 (contained in *Structural Analysis of Tank 241-SY-101 Multi-Functional Instrument Tree*, WHC-SD-WM-DA-112, Rev. No. 1-C)

Blevins, R. D. ,1979, *Formulas for Natural Frequency and Mode Shape*, Van Nostrand.

Brager, H.R., 1994, *Summary of Information on Flammable Gas Watch List Tanks*, WHC-EP-0711, Westinghouse Hanford Company, Richland, Washington.

Julyk, L.J., 1995, *Development of In-Structure Design Spectra for Dome Mounted Equipment on Underground Waste Storage Tanks at the Hanford Site*, WHC-SD-WM-TI-713, Rev. 0, ICF Kaiser Hanford Company, Richland, Washington.

SDC-4.1, 1993, *Hanford Plant Standards, Standard Arch-Civil Design Criteria, Design Loads for Facilities*, HPS-SDC-4.1, Rev. 12, U.S. Department of Energy-Richland Operations Office, Richland, Washington.

Strehlow, J.P. et. al., 1993, *Structural Design Specification for the Hydrogen Mitigation Test in Tank 241-SY-101*, WHC-SD-WM-RD-027, Rev. E-A.

APPENDIX B

Current MIT Configuration

The current configuration for the MIT design is documented on the following drawings, which cover MITs 1 through 8. Key configuration dimensions taken from these drawings are show in Figures 1 through 4 for MITs 3 through 8. MITs 1 and 2 are not included because their structural qualification is covered in a separate structural analysis report.

Drawing	Sheet	Revision
H-2-85141	1	5
H-2-85141	2	1
H-2-85141	3	1
H-2-85141	4	0
H-2-85141	5	1
H-2-85141	6	1
H-2-85141	7	0
H-2-85142	1	4
H-2-85142	2	2
H-2-85142	3	3
H-2-85142	4	0
H-2-85142	5	1
H-2-85142	6	2
H-2-85142	7	2
H-2-85142	8	1
H-2-85142	9	0
H-2-85142	10	0
H-2-85142	11	1
H-2-85142	12	0
H-2-85143	1	2
H-2-85143	2	0
H-2-85143	3	1
H-2-85143	4	0
H-2-85143	5	0
H-2-85144	1	4
H-2-85144	2	2
H-2-85144	3	3
H-2-85144	4	3
H-2-85144	5	2
H-2-85145	1	3
H-2-85145	2	3
H-2-85145	3	2

FIGURE 1. KEY CONFIGURATION DIMENSIONS FOR MIT HEAD ASSEMBLY

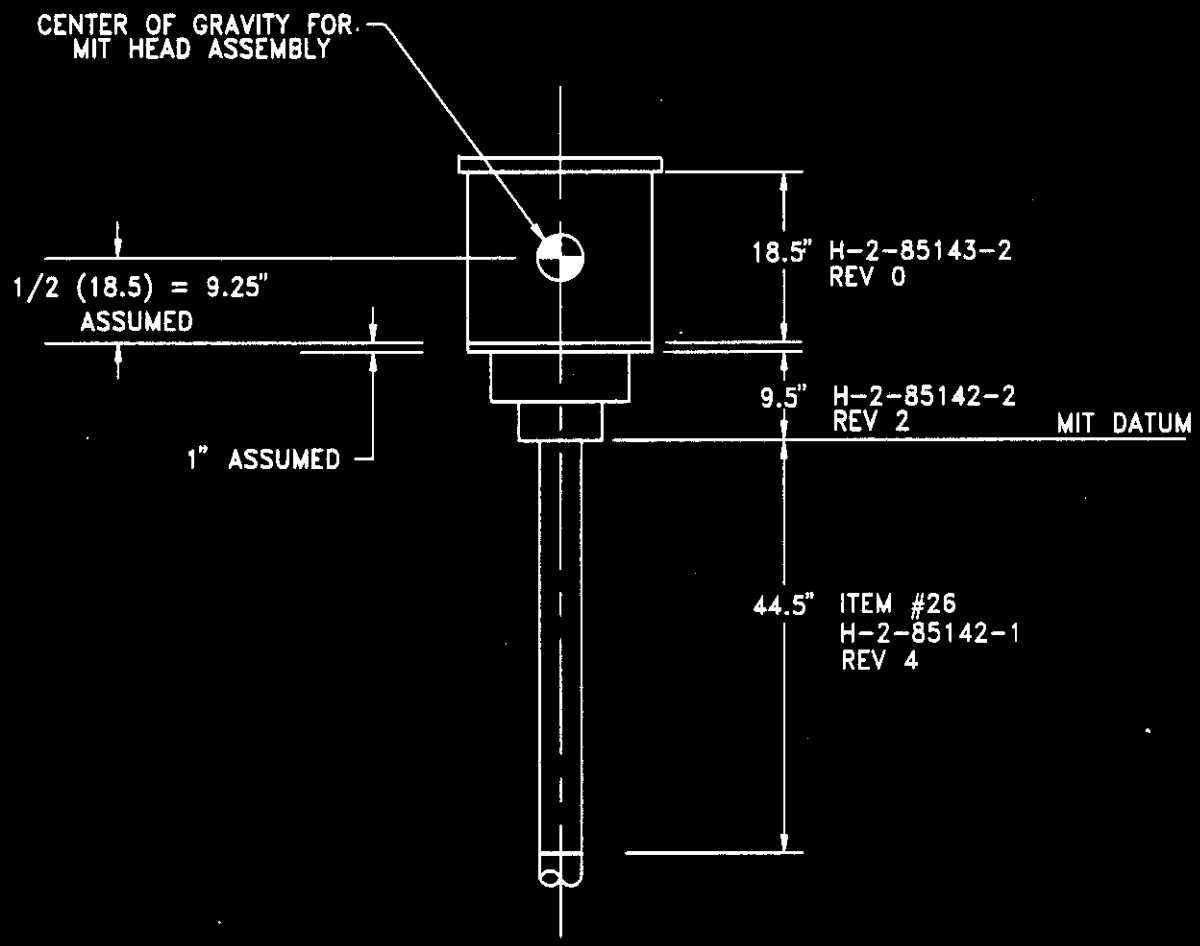

FIGURE 2. KEY CONFIGURATION DIMENSIONS FOR MITS 3 THROUGH 4

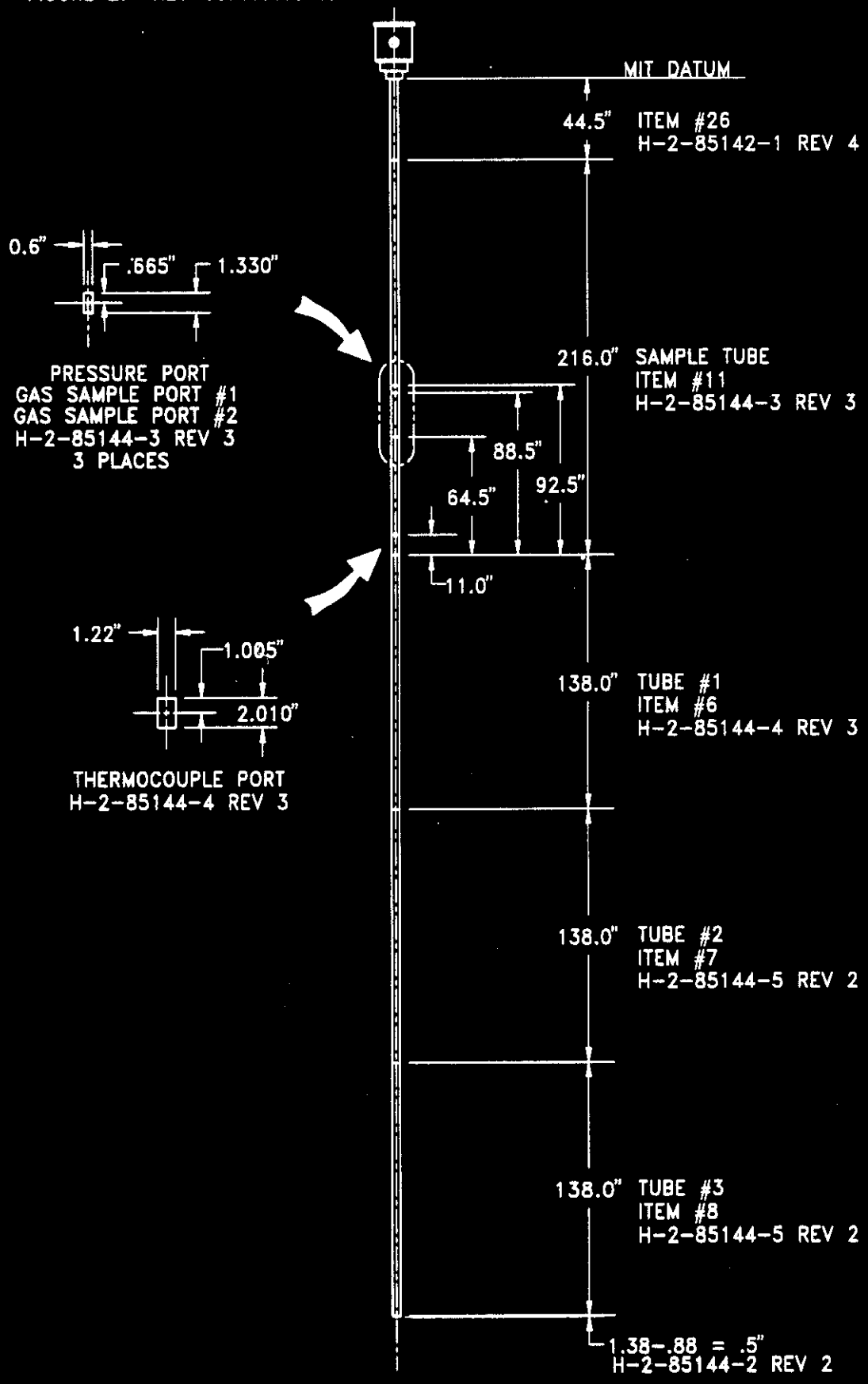

NOTE: DIMENSIONS LOCATING THE PRESSURE PORT, GAS SAMPLE PORTS AND THE THERMOCOUPLE PORT ARE TO THE CENTER OF THE CUTOUT.

JS2

FIGURE 3. KEY CONFIGURATION DIMENSIONS FOR MITS 5 THROUGH 8

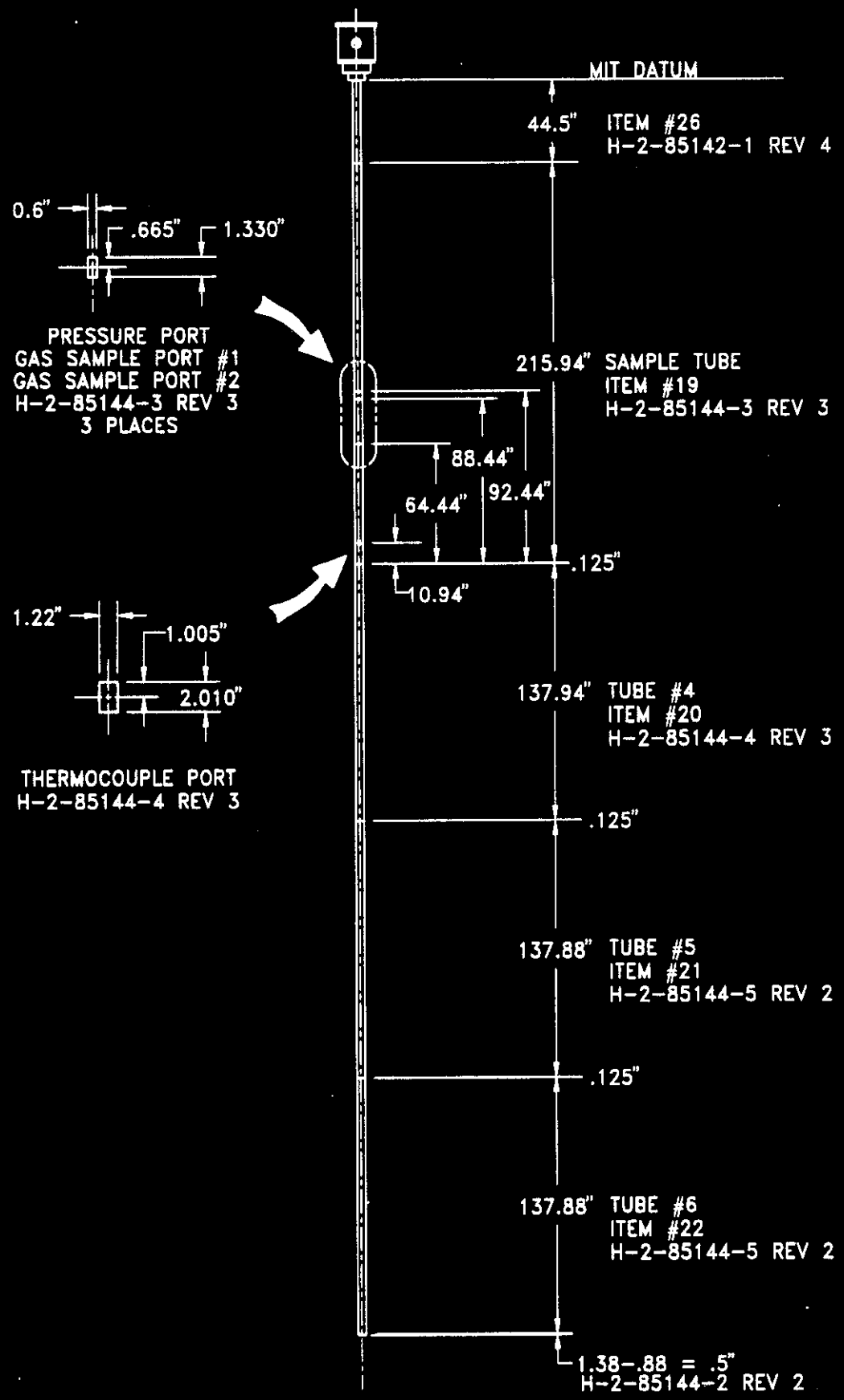

NOTE: DIMENSIONS LOCATING THE PRESSURE PORT, GAS SAMPLE PORTS AND THE THERMOCOUPLE PORT ARE TO THE CENTER OF THE CUTOUT.

JS5

FIGURE 4. SUMMARY OF KEY CONFIGURTATION DIMENSIONS FOR MITS 3 THOUGH 8

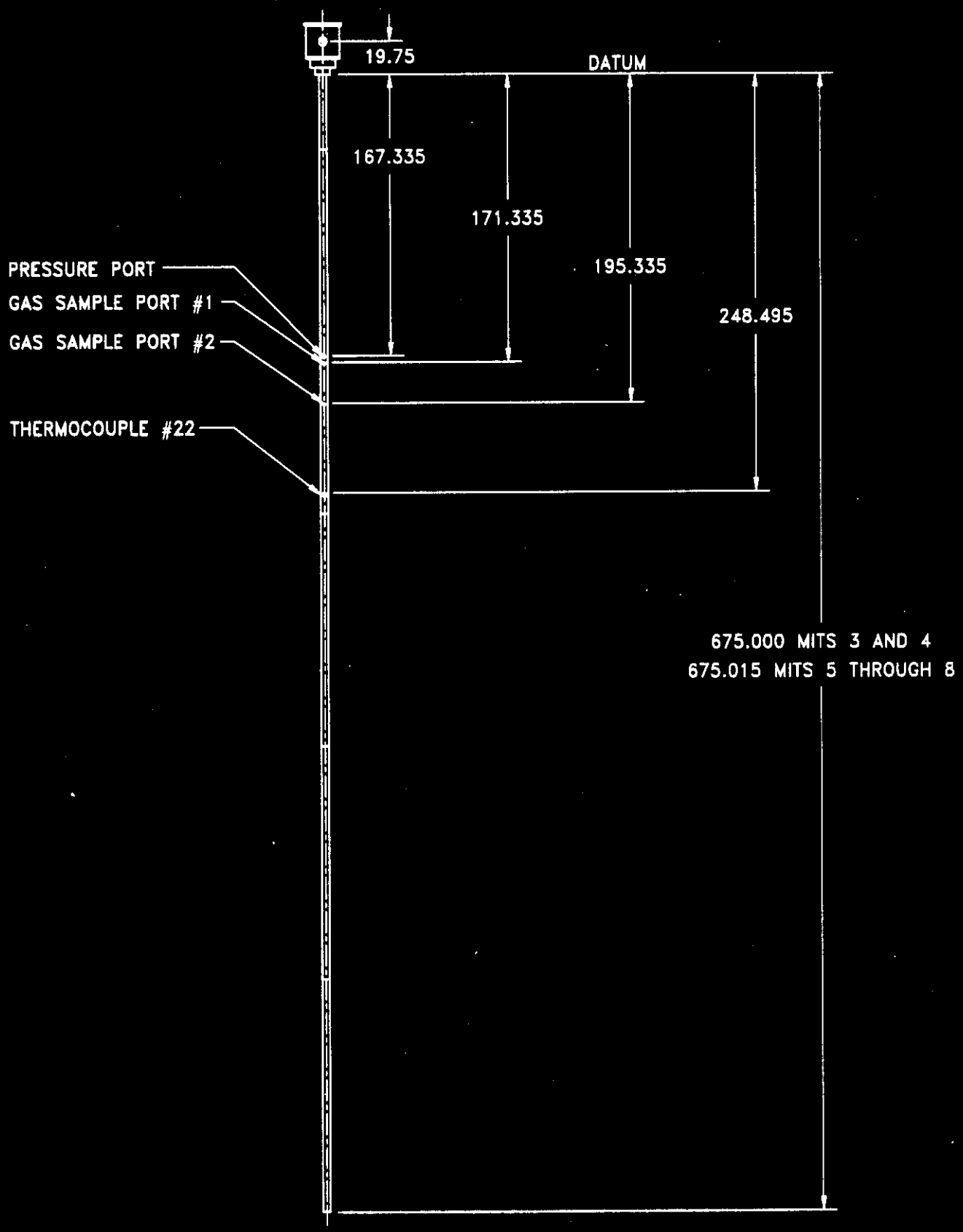

NOTE: DIMENSIONS LOCATING THE PRESSURE PORT, GAS SAMPLE PORTS AND THE THERMOCOUPLE PORT ARE TO THE TOP OF THE CUTOUT.

JS6

APPENDIX C

Structural Qualification of MIT for Installation In Tanks 241AN103, 104, and 105

CHECK LIST FOR STRUCTURAL QUALIFICATION OF MIT FOR A SPECIFIC INSTALLATION

Tank Number 241-AN-103 Installation Drawing H-2-85610-1 Rev. 0

Riser Number RIS-131 (15A) MIT Reference Number 5

(Note: Any requirement checked "no" invalidates the structural acceptance of the MIT installation, unless further engineering evaluations are performed to resolve the discrepancy)

Criteria Item	Requirement	Satisfied			Actual Value/Status	Reference/Comment
		Yes	No	N/A		
Tank and Riser Configuration						
Tank Diameter	75 ft	✓			75 ft	H-2-71975, Rev. 2
Radial Distance from Center of Tank to MIT Location	≥ 28 ft	✓			28 ft	H-14-10501-3, Rev. 0
Distance from Tank Floor to Bottom Lip of Riser	≤ 42.5 ft	✓			42.46 ft max	See Dimensional Calculations in this Appendix
Length of Riser	≤ 14 ft	✓			13.34 ft max	See Dimensional Calculations in this Appendix
Unsupported Length of Riser Above Soil Surface	≤ 2.5 ft	✓			1.72 ft	See Dimensional Calculations in this Appendix
Dome Thickness at MIT Location	≥ 15 in.	✓			15 in.	H-2-71907, Rev. 1
Dome Concrete Strength	≥ 4,500 lbf/in^2	✓			4,500 lbf/in^2	H-2-71907, Rev. 1
Reinforcing Bar Size at MIT Location	≥ #6	✓			#6 min	H-2-71907, Rev. 1 H-2-71908, Rev. 1
Reinforcing Bar Center to Center Spacing at MIT Location (Top and Bottom, Both Directions)	≤ 10 in.	✓			10 in. max	H-2-71907, Rev. 1
Reinforcing Bar Yield Strength	≥ 60,000 lbf/in^2	✓			60,000 lbf/in^2	H-2-71907, Rev. 1
Riser Pipe Size and Schedule	4 in. Sch 40	✓			4 in. Sch 40	H-2-72004, Rev. 1 H-2-85610-1, Rev. 0
Riser Material Yield Strength	≥ 30,000 lbf/in^2	✓			35,000 lbf/in^2 35,000 lbf/in^2	ASTM A56 Type S Gr. B (H-2-72004, Rev. 1) ASTM A-106 Gr. B (H2-85610-1, Rev. 0)
MIT Configuration						
Total MIT Weight	≤ 925 lbf	✓			925 lbf	See Note 1
Probe Head Weight	≤ 400 lbf	✓			400 lbf	See Note 1
Nominal Outside Diameter of Outer Tube	3.5 in.	✓			3.5 in.	H-2-85144-1, Rev. 4
Nominal Wall Thickness of Outer Tube	0.188 in.	✓			0.188 in.	H-2-85144-1, Rev. 4

CHECK LIST FOR STRUCTURAL QUALIFICATION OF MIT FOR A SPECIFIC INSTALLATION

Tank Number 241-AN-103 Installation Drawing H-2-85610-1 Rev. 0

Riser Number RIS-131 (15A) MIT Reference Number 5

Criteria Item	Requirement	Satisfied			Actual Value/Status	Reference/Comment
		Yes	No	N/A		
Outer Tube Material Type	Seamless, Stainless Steel Tube	✓			ASTM A511 TP304L Annealed	H-2-85144-1, Rev. 4
Outer Tube Material Yield Strength	≥ 30,000 lbf/in^2	✓			30,000 lbf/in^2	ASTM A511 TP 304L Annealed
Sampling Port Cutout Circumferential Dimension	≤ 0.6 in.	✓			0.6 in.	H-2-85144-3, Rev. 3
Thermocouple Cutout Circumferential Dimension	≤ 1.28 in.	✓			1.22 in.	H-2-85144-4, Rev. 3
or						
Chord Dimension	≤ 1.25 in.				-------	
Wall Thickness Removed for Circumferential Weld Backing Ring	≤ 0.023 in.				0.023 in.	H-2-85144-5, Rev. 2
or						
Partial Circumferential Weld Flaw Size (Length x Depth)	≤ 0.625 x ≤ 0.04 in.	✓			------	
or						
Full Circumferential Weld Flaw Size (Depth)	≤ 0.032 in.				-----	
MIT Installation						
Uniform Weight of MIT Below the Riser Flange Connections	≤ 525 lbf	✓			525 lbf	See Note 1
Height of Probe Head Center of Gravity Above Riser Flange Connection	≤ 4 ft	✓			2.57 ft	See Dimensional Calculations in this Appendix
Top Edge of Thermocouple #22 Cutout to Bottom Lip of Riser	≥ 73 in.	✓			77.4 in. min	See Dimensional Calculations in this Appendix
Operating Temperatures						
Gas Temperature in Vapor Space	≤ 110 °F	✓[1]			<111 °F	See Note 2
Waste Temperature	≤ 140 °F	✓			<114 °F	Reynolds 1994

[1] The actual temperature is close enough to the temperature limit to be considered acceptable. Any additional reduction on material strength due to the potential difference of 1.0 °F would be negligible.

CHECK LIST FOR STRUCTURAL QUALIFICATION OF MIT FOR A SPECIFIC INSTALLATION

Tank Number 241-AN-103 Installation Drawing H-2-85610-1 Rev. 0

Riser Number RIS-131 (15A) MIT Reference Number 5

Criteria Item	Requirement	Satisfied			Actual Value/Status	Reference/Comment
		Yes	No	N/A		
Waste Properties						
Waste Depth	250 to 420 in.	✓			347.5 in.	Manual Tape on 7/31/95 PC-SACS Database
Specific Gravity	≤ 1.7	✓			Effective S.G. <1.7	See Note 3
Viscosity	≤ 25,000 cP	✓			19.5 cP conv. layer 83-93 cP N/C layer	Reynolds 1994
Waste Reflower Load						
Maximum Waste Velocity over Top 10 Feet of Waste (Waste Velocity Below 10 Foot Depth Effectively Zero) or Bending Moment in MIT Outer Tube at Bottom Lip of Riser	Velocity Enveloped by Applicable Value from Figure 3.6.2-1 and Figure 3.6.2-2 ≤ 13,487 lb-in	✓			2.3 ft/s max Allowable Velocity from Figure 3.6.2-1 @ 1.5 s.g., 10,000 cP, and 347.5 in., Actual Velocity < 2.0 ft/s ---------	See Note 4
Mixing Pump Circulation Load						
Velocity Profile and Mixed Waste Velocity at MIT Location or Bending Moment in MIT at Bottom Lip or Riser	Velocity Profile Enveloped by Figure 3.6.3-1 and Viscosity ≤ 500 CP ≤ 17,686 in/in			✓		No Mixer Pumps Installed in this Tank
Strain Amplitude (1/2 of Strain Range) in MIT Outer Tube at Bottom Lip of Riser for Vibration Modes 1 and 2 or Show that Vortex Shedding is not Present.	≤ 189 μ in/in Mode 1 ≤ 139 μ in/in Mode 2 Vibration Mode 2 Applicable only if Flow Velocity at MIT Location Exceeds Mode 2 "Lock-In" Velocity of 1.9 ft/s Verify Through In-Situ Tests			✓		No Mixer Pumps Installed in this Tank

CHECK LIST FOR STRUCTURAL QUALIFICATION OF MIT FOR A SPECIFIC INSTALLATION

Tank Number 241-AN-103 Installation Drawing H-2-85610-1 Rev. 0

Riser Number RIS-131 (15A) MIT Reference Number 5

Criteria Item	Requirement	Satisfied			Actual Value/Status	Reference/Comment
		Yes	No	N/A		
Seismic Load						
Seismic Response Spectra for Structure Inertial Load	Enveloped or Equivalent to the Response Spectra in SDC-4.1, Rev. 12, for a 0.2 g Earthquake at 5% Critical Damping	✓			0.12 g Response Spectra per SDC-4.1, Rev. 12, 5% Damping	MIT is Safety Class 3 (Kidder 1993. For Safety Class 3 components the 0.12 g response spectra from SDC 4.1, Rev. 12, is used, which is enveloped by the 0.2 g response spectra.
Seismic Response Spectra for Waste Sloshing Load	Enveloped or Equivalent to the Response Spectra in SDC-4.1, Rev. 12, for a 0.2 g Earthquake at 0.5%Critical Damping (scaled from spectral values for 2% critical damping)	✓			0.12 g Response Spectra per SDC-4.1, Rev. 12, 0.5% Damping	MIT is Safety Class 3 (Kidder 1993). For Safety Class 3 components the 0.12 g response spectra from SDC 4.1, Rev. 12, is used, which is enveloped by the 0.2 g response spectra.
Internal Pressure Load						
Hydrogen Burn Peak Pressure (Gauge)	≤ 70 lbf/in^2	✓			< 70 lbf/in^2	See Note 5
Tensile Load Capacity of Bolting that Connects MIT to Riser	≥ 1,760 lbf	✓			> 1,760 lbf	By Inspection H-2-85610-1, Rev. 0
Installation Accident Drop						
Waste Depth and Viscosity or Use Impact Limiter for MIT Installation	Actual Minimum Specific Gravity ≥ Minimum Required Value from Figure 4.2-1 for Actual Waste Depth Impact Limiter Capable of Absorbing Drop Energy	✓			1.52 S.G. Required @ 347.5 in. Waste Depth, Actual Effective S.G. > 1.52 ------	See Note 3 Impact Limiter not Required

Based on the above checklist results, the indicated MIT installation is structurally qualified.

Cognizant Engineer J.P. Stubbs Date 12/1/95

Cognizant Manager J.P. Stubbs FOR W.W. JENKINS PER TELECON Date 12/1/95

Independent Review M.J. Elwood Date 12-1-95

CHECK LIST FOR STRUCTURAL QUALIFICATION OF MIT FOR A SPECIFIC INSTALLATION

Tank Number 241-AN-103 Installation Drawing H-2-85610-1 Rev. 0

Riser Number RIS-131 (15A) MIT Reference Number 5

NOTES:

1. This MIT is essentially identical to the MITs installed in tank SY101 (MITs 1 & 2, H-2-85141, Rev. 4). Therefore, their weights and weight distributions are also identical.

2. Waste surface temperatures (Reynolds 1994) were used for the gas temperatures. Actual gas temperatures will be slightly less than the waste surface temperature.

3. Recorded values for specific gravity are 1.5 for the convective layer and 1.8 for the non-convective layer, which covers the lower 150 in. of waste (Reynolds 1994). Based on these values, the effective specific gravity for lateral waste loads is expected to be less than 1.7 and the effective specific gravity for the accident drop is expected to be more than 1.52.

4. Waste rollover velocity for the AN tanks is expected to be less than 2.0 ft/s, the velocity used to qualify the SY101 MITs, because the waste rollovers in the AN tanks are less energetic than those in tank SY101 (Reynolds 1994).

5. Peak hydrogen burn pressure for the AN tanks is expected to be less than 70 lbf/in^2, the hydrogen burn pressure used to qualify the SY101 MITs, because the waste rollovers in the AN tanks are less energetic than those in tanks SY101 (Reynolds 1994).

REFERENCES:

Reynolds, D. A., 1994, "Evaluation of 241 AN Tank Farm Flammable Gas Behavior," WHC-EP-0717, January 1994, Westinghouse Hanford Company, Richland, Washington.

Kidder, R. J. 1993, "Double-Shell Tank Interim Safety Equipment List," WHC-SD-WM-SEL-026, Rev. 1, Westinghouse Hanford Company, Richland, Washington.

CHECK LIST FOR STRUCTURAL QUALIFICATION OF MIT FOR A SPECIFIC INSTALLATION

Tank Number 241-AN-104 Installation Drawing H-2-85611-1 Rev. 0

Riser Number RIS-131 (15A) MIT Reference Number 6

(Note: Any requirement checked "no" invalidates the structural acceptance of the MIT installation, unless further engineering evaluations are performed to resolve the discrepancy)

Criteria Item	Requirement	Satisfied			Actual Value/Status	Reference/Comment
		Yes	No	N/A		
Tank and Riser Configuration						
Tank Diameter	75 ft	✓			75 ft	H-2-71975, Rev. 2
Radial Distance from Center of Tank to MIT Location	≥ 28 ft	✓			28 ft	H-14-10501-3, Rev. 0
Distance from Tank Floor to Bottom Lip of Riser	≤ 42.5 ft	✓			42.46 ft max	See Dimensional Calculations in this Appendix
Length of Riser	≤ 14 ft	✓			13.34 ft. max	See Dimensional Calculations in this Appendix
Unsupported Length of Riser Above Soil Surface	≤ 2.5 ft	✓			1.72 ft	See Dimensional Calculations in this Appendix
Dome Thickness at MIT Location	≥ 15 in.	✓			15 in.	H-2-71907, Rev. 1
Dome Concrete Strength	≥ 4,500 lbf/in^2	✓			4,500 lbf/in^2	H-2-71907, Rev. 1
Reinforcing Bar Size at MIT Location	≥ #6	✓			#6 min	H-2-71907, Rev. 1 H-2-71908, Rev. 1
Reinforcing Bar Center to Center Spacing at MIT Location (Top and Bottom, Both Directions)	≤ 10 in.	✓			10 in. max	H-2-71907, Rev. 1
Reinforcing Bar Yield Strength	≥ 60,000 lbf/in^2	✓			60,000 lbf/in^2	H-2-71907, Rev. 1
Riser Pipe Size and Schedule	4 in. Sch 40	✓			4 in. Sch 40	H-2-72004, Rev. 1 H-2-85610-1, Rev. 0
Riser Material Yield Strength	≥ 30,000 lbf/in^2	✓			35,000 lbf/in^2 35,000 lbf/in^2	ASTM A56 Type S Gr. B (H-2-72004, Rev. 1) ASTM A-106 Gr. B (H2-85610-1, Rev. 0)
MIT Configuration						
Total MIT Weight	≤ 925 lbf	✓			925 lbf	See Note 1
Probe Head Weight	≤ 400 lbf	✓			400 lbf	See Note 1
Nominal Outside Diameter of Outer Tube	3.5 in.	✓			3.5 in.	H-2-85144-1, Rev. 4
Nominal Wall Thickness of Outer Tube	0.188 in.	✓			0.188 in.	H-2-85144-1, Rev. 4

CHECK LIST FOR STRUCTURAL QUALIFICATION OF MIT FOR A SPECIFIC INSTALLATION

Tank Number 241-AN-104 Installation Drawing H-2-85611-1 Rev. 0

Riser Number RIS-131 (15A) MIT Reference Number 6

Criteria Item	Requirement	Satisfied			Actual Value/Status	Reference/Comment
		Yes	No	N/A		
Outer Tube Material Type	Seamless, Stainless Steel Tube	✓			ASTM A511 TP304L Annealed	H-2-85144-1, Rev. 4
Outer Tube Material Yield Strength	≥ 30,000 lbf/in^2	✓			30,000 lbf/in^2	ASTM A511 TP 304L Annealed
Sampling Port Cutout Circumferential Dimension	≤ 0.6 in.	✓			0.6 in.	H-2-85144-3, Rev. 3
Thermocouple Cutout Circumferential Dimension or Chord Dimension	≤ 1.28 in. ≤ 1.25 in.	✓			1.22 in. -------	H-2-85144-4, Rev. 3
Wall Thickness Removed for Circumferential Weld Backing Ring or Partial Circumferential Weld Flaw Size (Length x Depth) or Full Circumferential Weld Flaw Size (Depth)	≤ 0.023 in. ≤ 0.625 x ≤ 0.04 in. ≤ 0.032 in.	✓			0.023 in. ------ -----	H-2-85144-5, Rev. 2
MIT Installation						
Uniform Weight of MIT Below the Riser Flange Connections	≤ 525 lbf	✓			525 lbf	See Note 1
Height of Probe Head Center of Gravity Above Riser Flange Connection	≤ 4 ft	✓			2.57 ft	See Dimensional Calculations in this Appendix
Top Edge of Thermocouple #22 Cutout to Bottom Lip of Riser	≥ 73 in.	✓			77.4 in. min	See Dimensional Calculations in this Appendix
Operating Temperatures						
Gas Temperature in Vapor Space	≤ 110 °F	✓			<107 °F	See Note 2
Waste Temperature	≤ 140 °F	✓			<123 °F	Reynolds 1994

CHECK LIST FOR STRUCTURAL QUALIFICATION OF MIT FOR A SPECIFIC INSTALLATION

Tank Number 241-AN-104 Installation Drawing H-2-85611-1 Rev. 0

Riser Number RIS-131 (15A) MIT Reference Number 6

Criteria Item	Requirement	Satisfied			Actual Value/Status	Reference/Comment
		Yes	No	N/A		
Waste Characteristics						
Waste Depth	250 to 420 in.	✓			385.9 in.	ENRAF on 8/14/95 PC-SACS Database
Specific Gravity	≤ 1.7	✓			1.46	Brager 1994
Viscosity	≤ 25,000 cP	✓			< 17,500 cP	See Note 3
Waste Reflux Load						
Maximum Waste Velocity over Top 10 Feet of Waste (Waste Velocity Below 10 Foot Depth Effectively Zero) or Bending Moment in MIT Outer Tube at Bottom Lip of Riser	Velocity Enveloped by Applicable Value from Figure 3.6.2-1 and Figure 3.6.2-2 ≤ 13,487 lb-in	✓			2.3 ft/s max Allowable Velocity from Figure 3.2.2-1 @ 1.5 s.g., 17,500 cP, and 385.9 in., Actual Velocity < 2.0 ft/s ------	See Note 4
Mixer Pump Circulation Load						
Velocity Profile and Mixed Waste Velocity at MIT Location or Bending Moment in MIT at Bottom Lip of Riser	Velocity Profile Enveloped by Figure 3.6.3-1 and Viscosity ≤ 500 CP ≤ 17,686 in/in			✓		No Mixer Pumps Installed in this Tank
Strain Amplitude (1/2 of Strain Range) in MIT Outer Tube at Bottom Lip of Riser for Vibration Modes 1 and 2 or Show that Vortex Shedding is not Present.	≤ 189 μ in/in Mode 1 ≤ 139 μ in/in Mode 2 Vibration Mode 2 Applicable only if Flow Velocity at MIT Location Exceeds Mode 2 "Lock-In" Velocity of 1.9 ft/s Verify Through In-Situ Tests			✓		No Mixer Pumps Installed in this Tank

CHECK LIST FOR STRUCTURAL QUALIFICATION OF MIT FOR A SPECIFIC INSTALLATION

Tank Number 241-AN-104 Installation Drawing H-2-85611-1 Rev. 0

Riser Number RIS-131 (15A) MIT Reference Number 6

Criteria Item	Requirement	Satisfied			Actual Value/Status	Reference/Comment
		Yes	No	N/A		
Seismic Load						
Seismic Response Spectra for Structure Inertial Load	Enveloped or Equivalent to the Response Spectra in SDC-4.1, Rev. 12, for a 0.2 g Earthquake at 5% Critical Damping	✓			0.12 g Response Spectra per SDC-4.1, Rev. 12, 5% Damping	MIT is Safety Class 3 (Kidder 1993). For Safety Class 3 components the 0.12 g response spectra from SDC 4.1, Rev. 12, is used, which is enveloped by the 0.2 g response spectra.
Seismic Response Spectra for Waste Sloshing Load	Enveloped or Equivalent to the Response Spectra in SDC-4.1, Rev. 12, for a 0.2 g Earthquake at 0.5%Critical Damping (scaled from spectral values for 2% critical damping)	✓			0.12 g Response Spectra per SDC-4.1, Rev. 12, 0.5% Damping	MIT is Safety Class 3 (Kidder 1993). For Safety Class 3 components the 0.12 g response spectra from SDC 4.1, Rev. 12, is used, which is enveloped by the 0.2 g response spectra.
Hydrogen Burn Load						
Hydrogen Burn Peak Pressure (Beum)	≤ 70 lbf/in^2	✓			< 70 lbf/in^2	See Note 5
Tensile Load Capacity of Bolting that Connects MIT to Riser	≥ 1,760 lbf	✓			> 1,760 lbf	By Inspection H-2-85610-1, Rev. 0
Investigation Accident Drop						
Waste Depth and Viscosity or Use Impact Limiter for MIT Installation	Record Minimum Specific Gravity ≥ Minimum Required Value from Figure 4.2-1 for Actual Waste Depth Impact Limiter Capable of Absorbing Drop Energy	✓			1.36 S.G. Required @ 385.9 in. Waste Depth, Actual S.G. 1.48 ------	Brager 1994 Impact Limiter not Required

Based on the above checklist results, the indicated MIT installation is structurally qualified.

Cognizant Engineer J.P. Stuchlow Date 12/1/95

Cognizant Manager J.P. Stuchlow FOR W.W. JENKINS PER TELECON Date 12/1/95

Independent Review M F Elliott Date 12-1-95

CHECK LIST FOR STRUCTURAL QUALIFICATION OF MIT FOR A SPECIFIC INSTALLATION

Tank Number 241-AN-104 Installation Drawing H-2-85611-1 Rev. 0

Riser Number RIS-131 (15A) MIT Reference Number 6

NOTES:

1. This MIT is essentially identical to the MITs installed in tank SY101 (MITs 1 & 2, H-2-85141, Rev. 4). Therefore, their weights and weight distributions are also identical.

2. Waste surface temperatures (Reynolds 1993) were used for the gas temperatures. Actual gas temperatures will be slightly less than the waste surface temperature.

3. Viscosity is assumed to be less than 17,500 cP because no data is available. This value is higher than any known viscosity in any Hanford tank.

4. Waste rollover velocity for the AN tanks is expected to be less than 2.0 ft/s, the velocity used to qualify the SY101 MITs, because the waste rollovers in the AN tanks are less energetic than those in tank SY101 (Reynolds 1994).

5. Peak hydrogen burn pressure for the AN tanks is expected to be less than 70 lbf/in^2, the hydrogen burn pressure used to qualify the SY101 MITs, because the waste rollovers in the AN tanks are less energetic than those in tanks SY101 (Reynolds 1994).

REFERENCES:

Brager, H. R, 1994, "Summary Information on Flammable Gas Watch List Tanks, WHC-EP-077," January 1994, Westinghouse Hanford Company, Richland, Washington.

Reynolds, D. A., 1994, "Evaluation of 241 AN Tank Farm Flammable Gas Behavior," WHC-EP-0717, January 1994, Westinghouse Hanford Company, Richland, Washington.

Kidder, R. J. 1993, "Double-Shell Tank Interim Safety Equipment List," WHC-SD-WM-SEL-026, Rev. 1, Westinghouse Hanford Company, Richland, Washington.

CHECK LIST FOR STRUCTURAL QUALIFICATION OF MIT FOR A SPECIFIC INSTALLATION

Tank Number 241-AN-105 Installation Drawing H-2-85612-1 Rev. 0

Riser Number RIS-131 (15A) MIT Reference Number 7

(Note: Any requirement checked "no" invalidates the structural acceptance of the MIT installation, unless further engineering evaluations are performed to resolve the discrepancy)

Criteria Item	Requirement	Satisfied			Actual Value/Status	Reference/Comment
		Yes	No	N/A		
Tank and Riser Qualification						
Tank Diameter	75 ft	✓			75 ft	H-2-71975, Rev. 2
Radial Distance from Center of Tank to MIT Location	≥ 28 ft	✓			28 ft	H-14-10501-3, Rev. 0
Distance from Tank Floor to Bottom Lip of Riser	≤ 42.5 ft	✓			42.46 ft max	See Dimensional Calculations in this Appendix
Length of Riser	≤ 14 ft	✓			13.34 ft max	See Dimensional Calculations in this Appendix
Unsupported Length of Riser Above Soil Surface	≤ 2.5 ft	✓			1.72 ft	See Dimensional Calculations in this Appendix
Dome Thickness at MIT Location	≥ 15 in.	✓			15 in.	H-2-71907, Rev. 1
Dome Concrete Strength	≥ 4,500 lbf/in^2	✓			4,500 lbf/in^2	H-2-71907, Rev. 1
Reinforcing Bar Size at MIT Location	≥ #6	✓			#6 min	H-2-71907, Rev. 1 H-2-71908, Rev. 1
Reinforcing Bar Center to Center Spacing at MIT Location (Top and Bottom, Both Directions)	≤ 10 in.	✓			10 in. max	H-2-71907, Rev. 1
Reinforcing Bar Yield Strength	≥ 60,000 lbf/in^2	✓			60,000 lbf/in^2	H-2-71907, Rev. 1
Riser Pipe Size and Schedule	4 in. Sch 40	✓			4 in. Sch 40	H-2-72004, Rev. 1 H-2-85610-1, Rev. 0
Riser Material Yield Strength	≥ 30,000 lbf/in^2	✓			35,000 lbf/in^2 35,000 lbf/in^2	ASTM A56 Type S Gr. B (H-2-72004, Rev. 1) ASTM A-106 Gr. B (H2-85610-1, Rev. 0)
MIT Qualification						
Total MIT Weight	≤ 925 lbf	✓			925 lbf	See Note 1
Probe Head Weight	≤ 400 lbf	✓			400 lbf	See Note 1
Nominal Outside Diameter of Outer Tube	3.5 in.	✓			3.5 in.	H-2-85144-1, Rev. 4
Nominal Wall Thickness of Outer Tube	0.188 in.	✓			0.188 in.	H-2-85144-1, Rev. 4

CHECK LIST FOR STRUCTURAL QUALIFICATION OF MIT FOR A SPECIFIC INSTALLATION

Tank Number 241-AN-105 Installation Drawing H-2-85612-1 Rev. 0

Riser Number RIS-131 (15A) MIT Reference Number 7

Criteria Item	Requirement	Satisfied			Actual Value/Status	Reference/Comment
		Yes	No	N/A		
Outer Tube Material Type	Seamless, Stainless Steel Tube	✓			ASTM A511 TP304L Annealed	H-2-85144-1, Rev. 4
Outer Tube Material Yield Strength	≥ 30,000 lbf/in^2	✓			30,000 lbf/in^2	ASTM A511 TP 304L Annealed
Sampling Port Cutout Circumferential Dimension	≤ 0.6 in.	✓			0.6 in.	H-2-85144-3, Rev. 3
Thermocouple Cutout Circumferential Dimension or Chord Dimension	≤ 1.28 in. ≤ 1.25 in.	✓			1.22 in. -------	H-2-85144-4, Rev. 3
Wall Thickness Removed for Circumferential Weld Backing Ring or Partial Circumferential Weld Flaw Size (Length x Depth) or Full Circumferential Weld Flaw Size (Depth)	≤ 0.023 in. ≤ 0.625 x ≤ 0.04 in. ≤ 0.032 in.	✓			0.023 in. ------ -----	H-2-85144-5, Rev. 2
MIT Installation						
Uniform Weight of MIT Below the Riser Flange Connections	≤ 525 lbf	✓			525 lbf	See Note 1
Height of Probe Head Center of Gravity Above Riser Flange Connection	≤ 4 ft	✓			2.57 ft	See Dimensional Calculations in this Appendix
Top Edge of Thermocouple #22 Cutout to Bottom Lip of Riser	≥ 73 in.	✓			77.4 in. min	See Dimensional Calculations in this Appendix
Operating Conditions						
Gas Temperature in Vapor Space	≤ 110 °F	✓			<100 °F	See Note 2
Waste Temperature	≤ 140 °F	✓			<112 °F	Reynolds 1994

CHECK LIST FOR STRUCTURAL QUALIFICATION OF MIT FOR A SPECIFIC INSTALLATION

Tank Number 241-AN-105 Installation Drawing H-2-85612-1 Rev. 0

Riser Number RIS-131 (15A) MIT Reference Number 7

Criteria Item	Requirement	Satisfied			Actual Value/Status	Reference/Comment
		Yes	No	N/A		
Waste Properties						
Waste Depth	250 to 420 in.	✓			412.25 in.	Manual Tape on 8/3/95 PC-SACS Database
Specific Gravity	≤ 1.7	✓			1.53	Brager 1994
Viscosity	≤ 25,000 cP	✓			< 17,500	See Note 3
Waste Release Load						
Maximum Waste Velocity over Top 10 Feet of Waste (Waste Velocity Below 10 Foot Depth Effectively Zero) or Bending Moment in MIT Outer Tube at Bottom Lip of Riser	Velocity Enveloped by Applicable Value from Figure 3.6.2-1 and Figure 3.6.2-2 ≤ 13,487 lb-in	✓			2.5 ft/s max Allowable Velocity from Figure 3.2.2-1 @ 1.5 s.g., 17,500 cP, and 412.25 in., Actual Velocity < 2.0 ft/s ------	See Note 4
Mixing Pump Circulation Load						
Velocity Profile and Mixed Waste Velocity at MIT Location or Bending Moment in MIT at Bottom Lip or Riser	Velocity Profile Enveloped by Figure 3.6.3-1 and Viscosity ≤ 500 CP ≤ 17,686 in/in			✓		No Mixer Pumps Installed in this Tanks
Strain Amplitude (1/2 of Strain Range) in MIT Outer Tube at Bottom Lip of Riser for Vibration Modes 1 and 2 or Show that Vortex Shedding is not Present.	≤ 189 μ in/in Mode 1 ≤ 139 μ in/in Mode 2 Vibration Mode 2 Applicable only if Flow Velocity at MIT Location Exceeds Mode 2 "Lock-In" Velocity of 1.9 ft/s Verify Through In-Situ Tests			✓		No Mixer Pumps Installed in this Tank

CHECK LIST FOR STRUCTURAL QUALIFICATION OF MIT FOR A SPECIFIC INSTALLATION

Tank Number 241-AN-105 Installation Drawing H-2-85612-1 Rev. 0

Riser Number RIS-131 (15A) MIT Reference Number 7

Criteria Item	Requirement	Satisfied			Actual Value/Status	Reference/Comment
		Yes	No	N/A		
Seismic Load						
Seismic Response Spectra for Structure Inertial Load	Enveloped or Equivalent to the Response Spectra in SDC-4.1, Rev. 12, for a 0.2 g Earthquake at 5% Critical Damping	✓			0.12 g Response Spectra per SDC-4.1, Rev. 12, 5% Damping	MIT is Safety Class 3 (Kidder 1993). For Safety Class 3 components the 0.12 g response spectra from SDC 4.1, Rev. 12, is used, which is enveloped by the 0.2 g response spectra.
Seismic Response Spectra for Waste Sloshing Load	Enveloped or Equivalent to the Response Spectra in SDC-4.1, Rev. 12, for a 0.2 g Earthquake at 0.5%Critical Damping (scaled from spectral values for 2% critical damping)	✓			0.12 g Response Spectra per SDC-4.1, Rev. 12, 0.5% Damping	MIT is Safety Class 3 (Kidder 1993). For Safety Class 3 components the 0.12 g response spectra from SDC 4.1, Rev. 12, is used, which is enveloped by the 0.2 g response spectra.
Hydrogen Burn Load						
Hydrogen Burn Peak Pressure (Beuma)	≤ 70 lbf/in^2	✓			< 70 lbf/in^2	See Note 5
Tensile Load Capacity of Bolting that Connects MIT to Riser	≥ 1,760 lbf	✓			> 1,760 lbf	By Inspection H-2-85612-1, Rev. 0
Installation Accident Drop						
Waste Depth and Viscosity or Use Impact Limiter for MIT Installation	Record Minimum Specific Gravity ≥ Minimum Required Value from Figure 4.2-1 for Actual Waste Depth Impact Limiter Capable of Absorbing Drop Energy	✓			1.28 S.G. Required @ 412.25 in. Waste Depth, Actual Effective S.G. is 1.53 ------	Brager 1994 Impact Limiter not Required

Based on the above checklist results, the indicated MIT installation is structurally qualified.

Cognizant Engineer J.P. Strathow Date 12/1/95

Cognizant Manager J.P. Strathow FOR W.W. JENKINS PER TELECON Date 12/1/95

Independent Review M Z Ertant Date 12-1-95

CHECK LIST FOR STRUCTURAL QUALIFICATION OF MIT FOR A SPECIFIC INSTALLATION

Tank Number 241-AN-105 Installation Drawing H-2-85612-1 Rev. 0

Riser Number RIS-131 (15A) MIT Reference Number 7

NOTES:

1. This MIT is essentially identical to the MITs installed in tank SY101 (MITs 1 & 2, H-2-85141, Rev. 4). Therefore, their weights and weight distributions are also identical.

2. Waste surface temperatures (Reynolds 1994) were used for the gas temperatures. Actual gas temperatures will be slightly less than the waste surface temperature.

3. Viscosity is assumed to be less than 17,500 cP because no data is available. This value is higher than any known viscosity in any Hanford waste tank.

4. Waste rollover velocity for the AN tanks is expected to be less than 2.0 ft/s, the velocity used to qualify the SY101 MITs, because the waste rollovers in the AN tanks are less energetic than those in tank SY101 (Reynolds 1994).

5. Peak hydrogen burn pressure for the AN tanks is expected to be less than 70 lbf/in^2, the hydrogen burn pressure used to qualify the SY101 MITs, because the waste rollovers in the AN tanks are less energetic than those in tanks SY101 (Reynolds 1994).

REFERENCES:

Brager, H. R, 1994, "Summary Information on Flammable Gas Watch List Tanks, WHC-EP-077," January 1994, Westinghouse Hanford Company, Richland, Washington.

Reynolds, D. A., 1994, Evaluation of 241 AN Tank Farm Flammable Gas Behavior, WHC-EP-0717, January 1994, Westinghouse Hanford Company, Richland, Washington.

Kidder, R. J. 1993, "Double-Shell Tank Interim Safety Equipment List," WHC-SD-WM-SEL-026, Rev. 1, Westinghouse Hanford Company, Richland, Washington.

Drawing _____ Report WHC-SD-WM-DA-209 Page 1 of 7
Building 241-SY-101 Revision 0 Job No. N/A
Subject Dimensional Evaluation for MIT Installations in Tanks AN103, AN104 and AN105
Originator J.P. Strehlow Date 11/21/95
Checker M.F. Erhart Date 11/21/95

The following dimensional evaluation is for the MITs installed in the subject AN tanks. This evaluation is based on the MIT positioning dimension of 11.06 in. shown on the installation drawings.

This evaluation is divided into three parts. Part I is for the nomial tank dome height, Part II is for the maximum tank dome height, and Part III is for the minimum tank dome height. The dimensional input data applied in this analysis is taken from Figure 4 in Appendix B and from Figure 1 in this Appendix.

PART I NOMINAL TANK DOME HEIGHT

The positioning dimension for the MIT is the distance from the MIT datum to the riser flange.

$D_{mit_flg} := 11.06$ in

The distance form the center of gravity for the MIT head assembly to the riser flange is

$D_{hd_flg} := 19.75 + D_{mit_flg}$

$D_{hd_flg} = 30.81$ in

$\frac{D_{hd_flg}}{12} = 2.568$ ft

The unsupported length of the riser above the soil surface is

$L_{flg_soil} := 14.66 + 6.0$

$L_{flg_soil} = 20.66$ in

$\frac{L_{flg_soil}}{12} = 1.722$ ft

The elevation at the bottom lip of the riser is determined as follows.

The inside surface of the tank concrete dome is an ellipse with the following dimensions.

$a := \frac{80.0}{2} \cdot (12)$ Half the major diameter

$a = 480$ in

$b := \frac{30.0}{2} \cdot (12)$ Half the minor diameter

$b = 180$ in

The distance from the tank centerline to the farthest outside edge of the riser is

$$x := 28.0 \cdot (12) + \left(\frac{1}{2}\right) \cdot 4.5$$

$$x = 338.25 \quad \text{in}$$

where the dimension 4.5 in. is the outside diameter of the riser (4 in. schedule 40 pipe).

The distance "y" from the major diameter of the tank dome ellipse to the intersection between the inside surface of the tank concrete dome and the farthest outside edge of the riser is determined as follows.

$$y := b \cdot \sqrt{\left[1 - \left(\frac{x}{a}\right)^2\right]} \qquad \text{Equation for an ellipse}$$

$$y = 127.713 \quad \text{in}$$

The elevation at the bottom lip of the riser is then determined as follows.

$$EL_{lip} := \frac{612.33 \cdot (12) + 0.375 + 8.0 + (31.0 \cdot (12) + 9.5) + y - 0.375 - 2.0}{12}$$

$$EL_{lip} = 655.26 \quad \text{ft}$$

The overall length of the riser, including the riser extension for the MIT installation, is

$$L_{riser} := \left[(667.0 \cdot (12) + 3.0) - EL_{lip} \cdot (12)\right] + 14.66$$

$$L_{riser} = 158.487 \quad \text{in}$$

$$\frac{L_{riser}}{12} = 13.207 \quad \text{ft}$$

The distance from the tank floor to the bottom lip of the riser is

$$D_{floor_lip} := ((31.0 \cdot (12) + 9.5) + y) - 2 \cdot (0.375) - 2.0$$

$$D_{floor_lip} = 506.463 \quad \text{in}$$

$$\frac{D_{floor_lip}}{12} = 42.205 \quad \text{ft}$$

The distance that the MIT extends below the bottom lip of the riser is

$$L_{mit_ext} := (675.015) - D_{mit_flg} - L_{riser}$$

$$L_{mit_ext} = 505.468 \quad in$$

$$\frac{L_{mit_ext}}{12} = 42.122 \quad ft$$

The clearance between the bottom of the MIT and the tank floor is

$$D_{clr} := D_{floor_lip} + L_{riser} + D_{mit_flg} - 675.015$$

$$D_{clr} = 0.995 \quad in$$

The distance from the top edge of thermocouple port #22 to the bottom lip of the riser is

$$D_{ttc22_lip} := 248.495 - \left(L_{riser} + D_{mit_flg}\right)$$

$$D_{ttc22_lip} = 78.948 \quad in$$

PART II MAXIMUM TANK DOME HEIGHT

The elevation at the bottom lip of the riser is determined as follows.

The inside surface of the tank concete dome is an ellipse with the following dimensions.

$$a := \frac{80.0}{2} \cdot (12) + 2.0$$ Half the major diameter

$$a = 482 \quad \text{in}$$

$$b := \frac{30.0}{2} \cdot (12) + 1.5$$ Half the minor diameter

$$b = 181.5 \quad \text{in}$$

The distance from the tank centerline to the farthest outside edge of the riser is

$$x := 28.0 \cdot (12) + \left(\frac{1}{2}\right) \cdot 4.5$$

$$x = 338.25 \quad \text{in}$$

where the dimension 4.5 in. is the outside diameter of the riser (4 in. schedlue 40 pipe).

The distance "y" from the major diameter of the tank dome ellipse to the intersection between the inside surface of the tank concrete dome and the farthest outside edge of the riser is determined as follows.

$$y := b \cdot \sqrt{\left[1 - \left(\frac{x}{a}\right)^2\right]}$$ Equation for an ellipse

$$y = 129.302 \quad \text{in}$$

The elevation at the bottom lip of the riser is then determined as follows.

$$EL_{lip} := \frac{612.33 \cdot (12) + 0.375 + 8.0 + (31.0 \cdot (12) + 9.5 + 1.5) + y - 0.375 - 2.0}{12}$$

$$EL_{lip} = 655.52 \quad \text{ft}$$

The overall length of the riser, including the riser extension for the MIT installation, is

$$L_{riser} := \left[(667.0 \cdot (12) + 3.0) - EL_{lip} \cdot (12)\right] + 14.66$$

$$L_{riser} = 155.398 \quad \text{in}$$

$$\frac{L_{riser}}{12} = 12.95 \quad \text{ft}$$

The distance from the tank floor to the bottom lip of the riser is

$$D_{floor_lip} := ((31.0 \cdot (12) + 9.5 + 1.5) + y) - 2 \cdot (0.375) - 2.0$$

$$D_{floor_lip} = 509.552 \quad \text{in}$$

$$\frac{D_{floor_lip}}{12} = 42.463 \quad \text{ft}$$

The distance that the MIT extends below the bottom lip of the riser is

$$L_{mit_ext} := (675.015) - D_{mit_flg} - L_{riser}$$

$$L_{mit_ext} = 508.557 \quad \text{in}$$

$$\frac{L_{mit_ext}}{12} = 42.38 \quad \text{ft}$$

The clearance between the bottom of the MIT and the tank floor is

$$D_{clr} := D_{floor_lip} + L_{riser} + D_{mit_flg} - 675.015$$

$$D_{clr} = 0.995 \quad \text{in}$$

The distance from the top edge of thermocouple port #22 to the bottom lip of the riser is

$$D_{ttc22_lip} := 248.495 - (L_{riser} + D_{mit_flg})$$

$$D_{ttc22_lip} = 82.037 \quad \text{in}$$

PART III MINIMUM TANK DOME HEIGHT

The elevation at the bottom lip of the riser is determined as follows.

The inside surface of the tank concete dome is an ellipse with the following dimensions.

$a := \frac{80.0}{2} \cdot (12) - 2.0$ Half the major diameter

$a = 478$ in

$b := \frac{30.0}{2} \cdot (12) - 1.5$ Half the minor diameter

$b = 178.5$ in

The distance from the tank centerline to the farthest outside edge of the riser is

$x := 28.0 \cdot (12) + \left(\frac{1}{2}\right) \cdot 4.5$

$x = 338.25$ in

where the dimension 4.5 in. is the outside diameter of the riser (4 in. schedlue 40 pipe).

The distance "y" from the major diameter of the tank dome ellipse to the intersection between the inside surface of the tank concrete dome and the farthest outside edge of the riser is determined as follows.

$y := b \cdot \sqrt{\left[1 - \left(\frac{x}{a}\right)^2\right]}$ Equation for an ellipse

$y = 126.124$ in

The elevation at the bottom lip of the riser is then determined as follows.

$$EL_{lip} := \frac{(612.33 \cdot 12) + 0.375 + 8.0 + (31 \cdot (12) + 9.5) + y - 0.375 - 2.0}{12}$$

$EL_{lip} = 655.13$ ft

The overall length of the riser, including the riser extension for the MIT installation, is

$L_{riser} := \left[(667 \cdot (12) + 3.0) - EL_{lip} \cdot (12)\right] + 14.66$

$L_{riser} = 160.076$ in

$\frac{L_{riser}}{12} = 13.34$ ft

The distance from the tank floor to the bottom lip of the riser is

$$D_{floor_lip} := ((31 \cdot (12) + 9.5) + y) - 2 \cdot (0.375) - 2.0$$

$$D_{floor_lip} = 504.874 \quad in$$

$$\frac{D_{floor_lip}}{12} = 42.073 \quad ft$$

The distance that the MIT extends below the bottom lip of the riser is

$$L_{mit_ext} := (675.015) - D_{mit_flg} - L_{riser}$$

$$L_{mit_ext} = 503.879 \quad in$$

$$\frac{L_{mit_ext}}{12} = 41.99 \quad ft$$

The clearance between the bottom of the MIT and the tank floor is

$$D_{clr} := D_{floor_lip} + L_{riser} + D_{mit_flg} - 675.015$$

$$D_{clr} = 0.995 \quad in$$

The distance from the top edge of thermocouple port #22 to the bottom lip of the riser is

$$D_{ttc22_lip} := 248.495 - \left(L_{riser} + D_{mit_flg}\right)$$

$$D_{ttc22_lip} = 77.359 \quad in$$

FIGURE 1. MIT INSTALLATION CONFIGURATION IN TANKS 241AN103, 104, AND 105

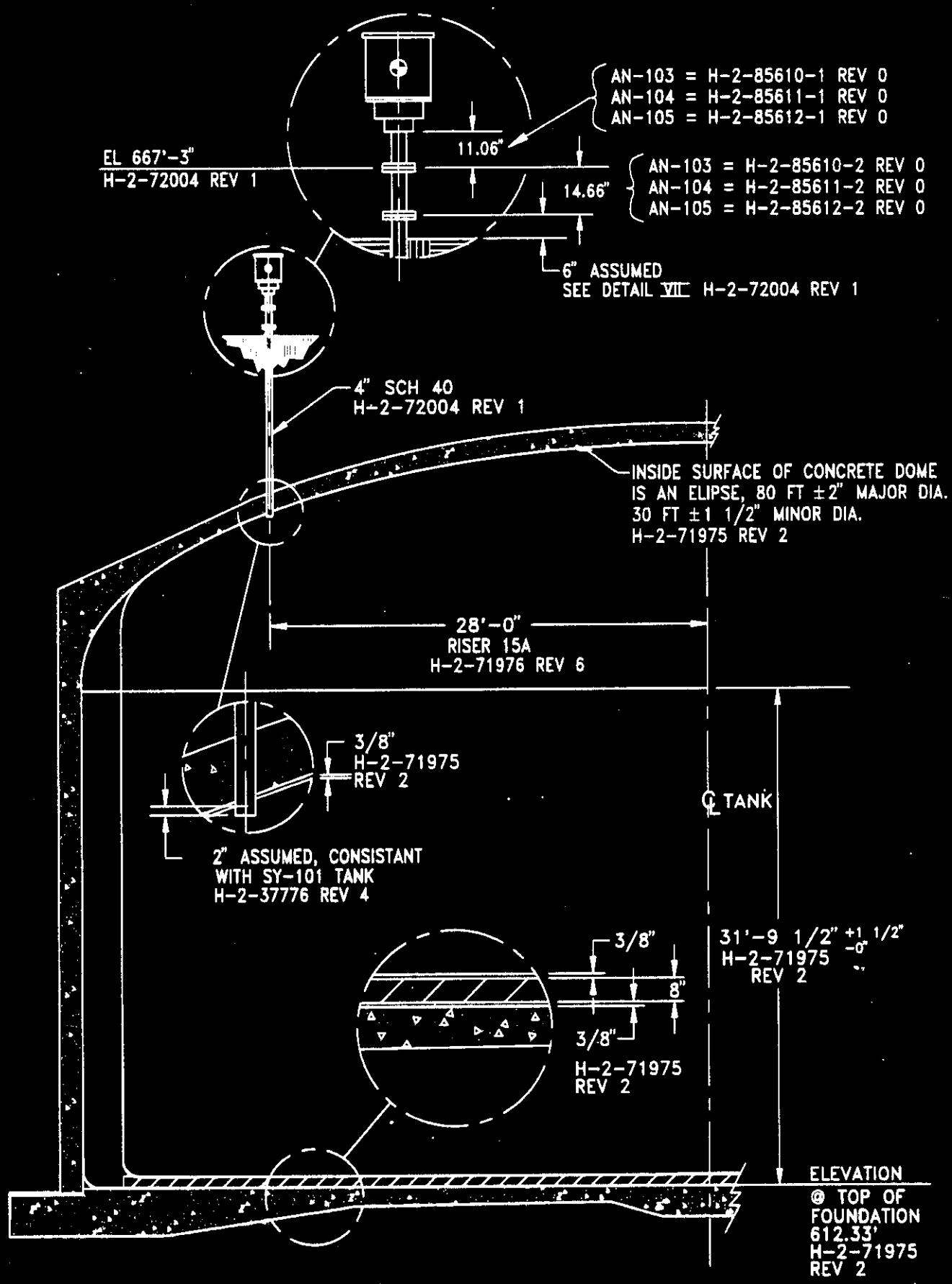

JS1

DISTRIBUTION SHEET

To	From	Page 1 of 1
Distribution	Mitigation System Integration	Date 11/20/95
Project Title/Work Order		EDT No. 604150
Structural Qualification of the Multifunctional Instrument Tree for Installation in Double-Shell and 100-Series Single-Shell Tanks		ECN No. N/A

Name	MSIN	Text With All Attach.	Text Only	Attach./ Appendix Only	EDT/ECN Only
M. F. Erhart	R1-51	X			
W. W. Jenkins	S2-24				X
L. S. Krogsrud	R3-08	X			
D. D. Larson	S4-43				X
J. W. Lentsch	S7-12				X
J. P. Strehlow	H5-68	X			
J. J. Verderber	S1-57	X			
Central Files	A3-88	X			

A-6000-135 (01/93) WEF067