DISTRIBUTION SHEET

To: Distribution From: D. E. Legare Date: 12-12-94

Project Title/Work Order:

Project W-151, W-320

D87
DZDE3
~~D2013~~

ECN No.: 617567 EDT No.: N/A Charge Code:

Name	MSIN	With Full Size Attachment	With Half Size Attachment	EDT/ECN & Comment	EDT/ECN Only
U.S. Department of Energy					
J. J. Davis	S6-62				X
A. G. Lassila	R3-73				X
E. W. Leschbar	G3-20				X
Westinghouse Hanford Company					
J. R. Biggs	T4-01	X			
R. E. Clayton	R3-27	X			
D. W. Crass	H5-68	X			
R. A. Dodd	S5-05	X			
J. L. Dowell	L7-05	X			
R. W. Eggers	N1-84	X			
J. L. Eliason	K9-45	X			
F. R. Fisher	H5-70	X			
T. E. Griffin	L6-13	X			
J. P. Harris	S6-12	X			
J. J. Huston	S6-12	X			
C. M. Keller	H5-70	X			
J. S. Lee	S7-03	X			
D. E. Legare	H5-68	X			
M. E. Manthei	R3-27	X			
R. M. Nelson	R3-09	X			
E. M. Nordquist (2)	R3-27	(2)			
R. E. Russell	H5-70	X			
T. N. Shaw	S6-12	X			
R. N. Sherman	R3-08	X			
J. E. Van Beek	L4-74	X			
IPF #1	R3-27	X			
Central Files L8-04 (2)	L8-04	X			
Project Files	R1-28				X
OSTI (2) (2)	L8-07	X(2)			

DISCLAIMER

Portions of this document may be illegible in electronic image products. Images are produced from the best available original document.

COMPLETE H

ENGINEERING CHANGE NOTICE

Page 1 of 2

1. ECN No 617567

Proj. ECN

2. ECN Category (mark one)	3. Originator's Name, Organization, MSIN, and Telephone No.	4. Date
Supplemental [] Direct Revision [X] Change ECN [] Temporary [] Standby [] Supersedure [] Cancel/Void []	D. E. Legare, 8D220, H5-68, 376-3489	12-12-94
	5. Project Title/No./Work Order No. W-151/W-320/~~D2M9C~~ D2DE3	6. Bldg./Sys./Fac. No. 241-AZ/241-C
	8. Document Numbers Changed by this ECN (includes sheet no. and rev.) WHC-SD-W320-TIS-001, Rev. 1	9. Related ECN No(s).

7. Approval Designator	10. Related PO No.
Q	

11a. Modification Work	11b. Work Package No.	11c. Modification Work Complete	11d. Restored to Original Condition (Temp. or Standby ECN only)
[] Yes (fill out Blk. 11b) [X] No (NA Blks. 11b, 11c, 11d)	N/A	Cog. Engineer Signature & Date	Cog. Engineer Signature & Date

12. Description of Change

The test plan for the Qualification Test of the Flexible Receiver is being revised to incorporate changes in the test procedure which resulted from dry-run testing and to incorporate the 42" Flexible Receiver Qualification test.

Prior to facility use of the Flexible Receiver system the following will be resolved:

- Design Requirement #51 (sect 3.4.2.5 of WHC-SD-W151-SDRD-001, Rev. 1) shall be revised to provide compliance.

13a. Justification (mark one)							
Criteria Change	[]	Design Improvement	[X]	Environmental	[]		
As-Found	[]	Facilitate Const.	[]	Const. Error/Omission	[]	Design Error/Omission	[]

13b. Justification Details

The revised procedure will eliminate test exceptions that would have resulted had the Rev. 1 procedure been used for the Qualification Test.

14. Distribution (include name, MSIN, and no. of copies)

See Dist. Sheet

RELEASE STAMP

OFFICIAL RELEASE BY WHC

DATE DEC 13 1994

Sta. 4

5

A-7900-013-2 (06/94) GEF095

ENGINEERING CHANGE NOTICE

1. ECN (use no. from pg. 1): 617567

15. Design Verification Required	16. Cost Impact				17. Schedule Impact (days)	
	ENGINEERING		CONSTRUCTION			
[] Yes	Additional	[] $	Additional	[] $	Improvement	[] N/A
[X] No	Savings	[] $N/A	Savings	[] $	Delay	[]

18. Change Impact Review: Indicate the related documents (other than the engineering documents identified on Side 1) that will be affected by the change described in Block 12. Enter the affected document number in Block 19.

SDD/DD	[]	Seismic/Stress Analysis	[]	Tank Calibration Manual	[]
Functional Design Criteria	[]	Stress/Design Report	[]	Health Physics Procedure	[]
Operating Specification	[]	Interface Control Drawing	[]	Spares Multiple Unit Listing	[]
Criticality Specification	[]	Calibration Procedure	[]	Test Procedures/Specification	[]
Conceptual Design Report	[]	Installation Procedure	[]	Component Index	[]
Equipment Spec.	[]	Maintenance Procedure	[]	ASME Coded Item	[]
Const. Spec.	[]	Engineering Procedure	[]	Human Factor Consideration	[]
Procurement Spec.	[]	Operating Instruction	[]	Computer Software	[]
Vendor Information	[]	Operating Procedure	[]	Electric Circuit Schedule	[]
OM Manual	[]	Operational Safety Requirement	[]	ICRS Procedure	[]
FSAR/SAR	[]	IEFD Drawing	[]	Process Control Manual/Plan	[]
Safety Equipment List	[]	Cell Arrangement Drawing	[]	Process Flow Chart	[]
Radiation Work Permit	[]	Essential Material Specification	[]	Purchase Requisition	[]
Environmental Impact Statement	[]	Fac. Proc. Samp. Schedule	[]	Tickler File	[]
Environmental Report	[]	Inspection Plan	[]		[]
Environmental Permit	[]	Inventory Adjustment Request	[]		[]

19. Other Affected Documents: (NOTE: Documents listed below will not be revised by this ECN.) Signatures below indicate that the signing organization has been notified of other affected documents listed below.

Document Number/Revision	Document Number/Revision	Document Number Revision
N/A		

20. Approvals

Signature	Date	Signature	Date
OPERATIONS AND ENGINEERING		ARCHITECT-ENGINEER	
Cog. Eng. DE Legare Don Legare	12/12/94	PE	
Cog. Mgr. RK Brown R E Brown for	12/12/94	QA	
QA RE Clayton R E Clayton	12/12/94	Safety	
Safety		Design	
Environ.		Environ.	
Other		Other	
~~QA JJ Huston~~ DJR			
Projects TN Shaw T. N. Shaw	12/12/94		
Projects/Programs EM Nordquist M E Nordquist for EMN.	12/12/94	DEPARTMENT OF ENERGY	
		Signature or a Control Number that tracks the Approval Signature	
		ADDITIONAL	

RELEASE AUTHORIZATION

Document Number:	WHC-SD-W320-TIS-001, REV.2
Document Title:	Qualification Test for the Flexible Receiver
Release Date:	December 13, 1994

This document was reviewed following the procedures described in WHC-CM-3-4 and is:

APPROVED FOR PUBLIC RELEASE

WHC Information Release Administration Specialist:

Kara M. Broz — December 13, 1994

TRADEMARK DISCLAIMER. Reference herein to any specific commercial product, process, or service by trade name, trademark, manufacturer, or otherwise, does not necessarily constitute or imply its endorsement, recommendation, or favoring by the United States Government or any agency thereof or its contractors or subcontractors.

This report has been reproduced from the best available copy. Available in paper copy and microfiche. Printed in the United States of America. Available to the U.S. Department of Energy and its contractors from:

U.S. Department of Energy
Office of Scientific and Technical Information (OSTI)
P.O. Box 62
Oak Ridge, TN 37831
Telephone: (615) 576-8401

Available to the public from: U.S. Department of Commerce
National Technical Information Service (NTIS)
5285 Port Royal Road
Springfield, VA 22161
Telephone: (703) 487-4650

SUPPORTING DOCUMENT

1. Total Pages 148

2. Title
Qualification Test for the Flexible Receiver

3. Number
WHC-SD-W320-TIS-001

4. Rev No.
2

5. Key Words
Flexible Receiver
W-320
W-151

APPROVED FOR PUBLIC RELEASE

12/13/94

6. Author
Name: ~~C. M. Keller~~ D.J TEDESCHI

Signature

Organization/Charge Code 8D320/~~B2M9C~~ D2DG3

7. Abstract

This document provides the test plan and procedures to certify and design verify the 42" and 4"-6" Flexible Receiver as a safety class 3 system. The Flexible Receiver will be used by projects W-151 and W-320 for removing equipment from tanks C-106 and AZ-101.

8. RELEASE STAMP

OFFICIAL RELEASE BY WHC
DATE DEC 13 1994
Sta. 4

RECORD OF REVISION	(1) Document Number WHC-SD-W320-TIS-001	Page 1

(2) Title
Qualification Test for the Flexible Receiver

CHANGE CONTROL RECORD

(3) Revision	(4) Description of Change - Replace, Add, and Delete Pages	Authorized for Release	
		(5) Cog. Engr.	(6) Cog. Mgr. Date
1	(7) Revised test procedure steps to incorporate changes per dry-run testing. ECN 617551	DE Legare	RK Brown
2 SD	Revised test procedure steps to incorporate changes per dry-run testing and to incorporate the 42" Flexible Receiver Qualification Test. ECN-617567 KN	DE Legare Don Legare 12/12/94	RK Brown Don Legare For 12/12/94

QUALIFICATION TEST FOR THE FLEXIBLE RECEIVER

WHC-SD-W320-TIS-001 Rev 2

December 12, 1994

DISCLAIMER

This report was prepared as an account of work sponsored by an agency of the United States Government. Neither the United States Government nor any agency thereof, nor any of their employees, makes any warranty, express or implied, or assumes any legal liability or responsibility for the accuracy, completeness, or usefulness of any information, apparatus, product, or process disclosed, or represents that its use would not infringe privately owned rights. Reference herein to any specific commercial product, process, or service by trade name, trademark, manufacturer, or otherwise does not necessarily constitute or imply its endorsement, recommendation, or favoring by the United States Government or any agency thereof. The views and opinions of authors expressed herein do not necessarily state or reflect those of the United States Government or any agency thereof.

MASTER

DISTRIBUTION OF THIS DOCUMENT IS UNLIMITED

TABLE OF CONTENTS

PAGE

APPROVAL/SIGNATURE PAGES i

1.0 TEST ITEM IDENTIFICATION 24
1.1 FLEXIBLE RECEIVER 24

2.0 GENERAL DESCRIPTION 29
2.1 TEST OBJECTIVES 29

3.0 TEST CONDITION LIMITS 29
3.1 OPERATIONAL LIMITS 29
3.2 ENVIRONMENTAL LIMITS 30

4.0 FACILITIES, EQUIPMENT, AND MATERIALS 30
4.1 TEST FACILITY 30
4.2 EQUIPMENT 30

5.0 SAFETY 31

6.0 EXCEPTIONS 31

7.0 PERSONNEL REQUIREMENTS 32
7.1 GENERAL 32
7.2 TEST DIRECTOR 32
7.3 WITNESSES 33
7.4 RECORDER 33
7.5 TEST OPERATOR 34

8.0 TEST PROCEDURE 34
8.1 GENERAL SYSTEM REQUIREMENTS 34
8.2 TEST CONDITIONS 35
8.3 OPERATIONAL SEQUENCE 36
8.3.1 Start Up Sequence 36
8.3.2 Flexible Receiver Sequence 39
8.3.3 Secondary Bagger Operations 48
8.3.4 Manual Control 50
8.3.5 Master Reset 53

9.0 REFERENCES 53
9.1 DRAWINGS 53
9.2 VENDOR INFORMATION 54
9.3 OTHER INFORMATION 54

10.0 DATA SHEETS 54
10.1 TEST EXCEPTION SHEET 54
10.2 TEST LOG SHEET 57

11.0 4/6" FLEXIBLE RECEIVER SYSTEMS TEST PROCEDURE 59
11.1 GENERAL SYSTEM REQUIREMENTS 59
11.1.1 TEST CONDITIONS 59

12.0 OPERATIONAL SEQUENCE 61
12.1 START UP SEQUENCE 61
12.2 Flexible Receiver Sequence 63
12.3 SECONDARY BAGGER OPERATIONS 69

Appendix A. 42" FR Approved/Performed Test Procedures and Exceptions

List of Figures

1. Flexible Receiver Systems 26
2. Typical 42" Flexible Receiver Located On A Tank 27
3. Typical 4"-6" Flexible Receiver Located On A Tank 28

PERSONNEL INVOLVED IN THE QUALIFICATION TESTING OF THE 42" FLEXIBLE RECEIVER

ALL NAMES ON THIS PAGE ARE TO BE PRINTED, SIGNED, AND INITIALED FOR CLARIFICATION.

EXECUTED BY:

Test Director/Organization	Date	Test Operator/Organization	Date
Recorder/Organization	Date	Test Operator/Organization	Date

WITNESSES:

Witness/Organization	Date	Witness/Organization	Date
Witness/Organization	Date	Witness/Organization	Date

PERSONNEL INVOLVED IN THE QUALIFICATION TESTING
OF THE 4"-6" FLEXIBLE RECEIVER

ALL NAMES ON THIS PAGE ARE TO BE PRINTED, SIGNED, AND INITIALED FOR CLARIFICATION.

EXECUTED BY:

Test Director/Organization	Date	Test Operator/Organization	Date
Recorder/Organization	Date	Test Operator/Organization	Date

WITNESSES:

Witness/Organization	Date	Witness/Organization	Date
Witness/Organization	Date	Witness/Organization	Date

TEST APPROVAL AND ACCEPTANCE OF 42" FLEXIBLE RECEIVER

These signatures approve with exceptions that the 42" Flexible Receiver is qualified for use in the field based on the results from these tests.

Test Director	Date	Cognizant Engineer	Date
Quality	Date		Date

Comments:

TEST APPROVAL AND ACCEPTANCE OF 4"-6" FLEXIBLE RECEIVER

These signatures approve with exceptions that the 4"-6" Flexible Receiver is qualified for use in the field based on the results from these tests.

Test Director	Date	Cognizant Engineer	Date
Quality	Date		Date

Comments:

PURPOSE AND SCOPE OF DOCUMENT

This document provides the test plan and procedures to certify and design verify the 42" and 4"-6" Flexible Receiver (FR) as a safety class 3 system. Verification of the design will be handled in two parts. The first part will be to show that it meets design requirements set forth by documents and the second part will perform test(s) to verify its operational aspects.

PART I DESIGN VERIFICATION BASED ON REQUIREMENTS

The following is a table that defines the documents, their requirements, and specifies FR compliance.

Item No.	Document and Requirement	Comply Y or N	Remarks or Comments
1	WHC-CM-6.1 EP 1.4 APPENDIX B Safety class 3 and non-safety class 4 items must meet the requirements of DOE Order 6430.1A for non-safety class facilities and SDC 4.1. Applicable conventional standards shall be applied to safety class 3 items.	Y	This system has met the applicable requirements of DOE 6430.1A. All trailers have been designed to the requirements of SDC 4.1. For the new trailer: Per H-2-78935 rev 2, the trailer is purchased to meet the requirements of SDC 4.1. For the retrofit trailer: This trailer was designed and constructed and reevaluated for SDC 4.1 per WHC-SD-WM-SA-089. For the Flexible Receiver: This has been designed for a 70 MPH (UBC requirement) wind and will withstand it per WHC-SD-W151-DA-003. All other design factors (snow, earthquake, ash) are less severe and are therefore covered by the wind load evaluation. Applicable industrial type standards have been used (as shown in the FDC's for both Project W320 and W151) to meet the requirements for a safety class 3 piece of equipment.

This is a total rewrite, therefore, revision bars were not used.

Item No.	Document and Requirement	Comply Y or N	Remarks or Comments
2	WHC-CM-6.1 EP 2.1 Software is managed in accordance to EP 2.1	Y	There are two types of software used on the flexible receiver. 1) Ladder logic that controls the receiver systems for bagging. This is documented in the "Software Configuration Management Plan For The Flexible Receiver Control System" WHC-SD-W151-CSCM-001, Rev 0. 2) VAX software and program used in the GAMMA ASSAY. This software manipulates and processes information sent from the probes via the nucleonics. Each software will have a table of description to fill out on it.
3	WHC-CM-1-3 MRP 5.46 REV 4 Safety class 3 items shall be incorporated into safety equipment lists individually or by reference to the system including the subject item. A system reference implies that all items in the system are Safety Class 3.	Y	The PSAR (WHC-SD-W151-PSAR-001 Rev 0) for Project W151 views the flexible receiver as a system and classifies it as safety class three. Project W320 also covers this as a system in the Preliminary Safety Evaluation WHC-SD-WM-PSE-010.
4	WHC-CM-1-3 MRP 5.46 REV 4 QA Requirements As a minimum, conventional industrial standards (NEC, NFPA, Mil Stds ...) shall be applied to WHC safety class 3 items.	Y	Same as in item 1.
The following requirements are taken from WHC-SD-W320-FDC-001, Rev. 2. Only the applicable requirements have been listed.			

Item No.	Document and Requirement	Comply Y or N	Remarks or Comments
5	sect 2.2.4 The retrieval system shall be designed to minimize the generation of new liquid waste created as a result of the retrieval operations.	Y	The only waste the system will produce will be in the washing of equipment as it is being pulled out. Hot water will spray out of a ring of nozzles at 50 gpm (max), then it is routed into the tank. The amount of water expected to be used will be 2500 (± 500) gallons for a 50 foot long piece of equipment at an extrusion rate of 1 ft per minute. See FDC WHC-S-037.
6	sect 2.2.4 The retrieval equipment shall be remotely operable from a control room located outside the Tank Farm radiation zone.	Y	This requirement was clarified in Internal Memo 7F820-94-008, *Project 93L-EWW-320, Tank 241-C-106 Sluicing, Letter of Clarification, Equipment Removal System Control Trailer Requirements* to pertain to only the control room for the tank waste sluicing operation. The clarification excludes the Equipment Removal System from this requirement. Since the Flexible Receiver is part of the Equipment Removal System it is not required that its control trailer be located outside the Tank Farm radiation zone. The Flexible Receiver control trailer will be located approximately 100 ft away from the area of equipment operation.
7	sect 2.2.4 Systems operation shall be in accordance with ALARA principles.	Y	This operation will be remotely handled such that few if any person(s) will need to be close to the actual operation. Emergency devices, such as in the event the bag does not get fully cut and it will be necessary to manually cut the bag, will account for minimizing distance by placing tool on an extension rod.

Item No.	Document and Requirement	Comply Y or N	Remarks or Comments
8	sect 2.2.4 Human factors engineering shall be performed in accordance with DOE Order 6430.1A, *General Design Criteria* (DOE 1989), to enhance assembly, operation, maintenance, and disassembly of the retrieval system, and to minimize the potential for operator error.	Y	This feature will only apply to the controls and trailer used to house the controls. The controls were designed to NUREG 0700 per DOE Order 6403.1a guidance. The trailer will also meet this document.
9	sect 2.2.6 All structures and components that are intended for installation and removal via crane shall have their weight permanently and prominently marked on the item and indicated on the definitive design media. All structures and components that are intended for hands-on installation and removal (e.g., pit valve handles, inspection port plugs, etc.) shall have their weight permanently and prominently marked on the item and indicated on the definitive design media.	P	In progress
10	sect 2.2.6 The WRSS shall be designed to comply with all onsite packaging and shipping requirements. The scope of the activity shall include features which facilitate removal and disposal of the waste retrieval equipment.	Y	See PDC WHC-SD-TP-PDC-015 on packaging.

Item No.	Document and Requirement	Comply Y or N	Remarks or Comments
11	sect 3.1 The instrument and control system shall monitor and control the facility retrieval and transfer options, HVAC, and support systems to perform all functions necessary to retrieve the contents of the tank and transport the material to its new holding facility.	Y	Ladder logic coupled with a programmable logic controller, monitor and control the process of pulling an object out of the tank into the bag. These operations are remotely controlled and visually observed by 3 CCTV cameras on the receiver. All controls for the FR are located in a trailer.
12	sect 4.5 Electrical enclosures, junction boxes, and pull boxes shall meet the requirements of the environment in which the housings are installed.	Y	All boxes exposed to the environment will be constructed using NEMA 4 type enclosures. This applies to box(s) on the new trailer (see drawing H-2-78935) and actual hardware from the retrofit grout trailer.
13	sect 4.7 General design guidelines for energy conservation shall comply with the following sections of DOE Order 6430.1A: • 0110-12, "Energy Conservation" • 1595-10, "Energy Management Systems" • 1595-11, "Interior Electrical Power and Lighting Systems" The design must include an energy conservation report in accordance with DOE Order 6430.1A, Section 0110-12.8.	Y	No report will need to be written per section 0110-12.8.1 We will not exceed 500 million BTUs (total energy consumption) per year nor is the trailer(s) greater than 10,000 sq ft. No full blown analysis will be done. An agreement was made not to do a big analysis per telephone conversation and cc mail to Bill White of DOE-RL and WHC Energy Management. The agreement was to write a DSI to file (DSI-94-DJT-001) showing why no further analysis will need to be done on project 151 trailer. There will not be any more analysis done on the trailer taken from grout since its not changing the trailer structure or its support equipment.

Item No.	Document and Requirement	Comply Y or N	Remarks or Comments
14	sect 4.8.2 Provisions for remote replacement of system equipment that operates in a high-radiation zone shall be made as required to meet ALARA criteria (see DOE/EV/1830-T5, *A Guide to Reducing Radiation Exposure to as Low as Reasonably Achievable [ALARA]* [DOE 1980]). The capability shall be provided to perform a preliminary decontamination, where practical, of equipment before repair or removal.	Y	ALARA has been employed when operating the equipment and when placing it too. There are no sources of exposure when placing the receiver equipment with the exception of possible airborne contaminants from opening the riser. Operation of the FR is performed remotely in a trailer away from the equipment being removed (source of radiation). A spray wash system has been incorporated to partially decontaminate the equipment to be removed from the tanks. There is adequate provision for decontaminating the inside of the receiver before removing. The receiver has several access ports which have the potential to be used for decontaminating the internal surfaces of the FR.
15	sect 4.8.2 All mechanical equipment, windows, cameras, television monitors, and other equipment in areas of potential radioactivity shall, where practical, be sealed or otherwise protected from penetration by contamination and decontamination solutions.	Y	All joints, unions, or access ports that are exposed to the removed equipment have seals.
16	sect 4.8.2 All electrical and instrumentation equipment shall be properly grounded for safety of personnel and protection of equipment.	Y	All electrical equipment has been designed per the NEC code. All equipment has been properly grounded. See H-2-98937

Item No.	Document and Requirement	Comply Y or N	Remarks or Comments
17	sect 4.8.3 Materials shall be compatible with the exposed environment. Installed materials shall be (1) resistant to radiation, process solutions, acid and caustic vapors and solutions, and known decontamination agents; (2) nonabsorbent, easily removable if not contamination resistant; and/or (3) oversized to permit partial destruction without affecting structural integrity.	Y	The environmental conditions that receiver equipment material will be exposed to is the following: 1) normal desert weather, 2) hot water, and 3) radiation. All components exposed to the weather are weather proofed. Critical components, such as hydraulic piping have been designed to account for corrosion by being fabricated from stainless steel. The interior of the receiver will see the worst conditions which includes the hot water and radiation. All equipment exposed to these conditions has been designed to endure such an environment. Note that radiation levels may be high, but exposure time is low, which precludes that material that is normally not so conducive to the radiation will still be acceptable. Also, use of the receiver equipment will be limited. See drawing H-2-79310, 79320, 79362 for parts lists.
18	sect 5.1.2 A safety analysis shall be conducted in accordance DOE Order 5480 and 6430.	Y	See WHC-SD-WM-PSE-010 for project W320 and WHC-SD-W151-PSAR-001 for W151.

Item No.	Document and Requirement	Comply Y or N	Remarks or Comments
19	sect 5.1.3 The retrieval system shall be designed to confine contaminants within the combination of boundaries defined by the existing tank, the confinement surfaces of the retrieval system, and any other barriers that may be required. A system shall be employed to control contamination caused by a failure of the primary confiner or other off-normal situation.	Y	The tank ventilation system is a method of contamination control should a failure of the primary confiner (open riser, or failed Flexible Receiver bag) occur. The draft Safety Assessment, WHC-SD-WM-SAD-024, Rev. A (approval expected by 10/94), states that dose consequences due to an open riser condition with a failed tank ventilation system is within the acceptance guidelines of WHC-CM-4-46 for a period of at least 8 hours on tank C-106.
20	sect 5.1.3 The retrieval system shall have provisions for safe and effective decontamination (see Section 5.8). The design of the WRSS shall facilitate decontamination so that the facility can be decommissioned at a future date. Guidance for retrieval equipment design to facilitate eventual decommissioning shall be obtained from DOE Order 4700.1, *Project Management System* (DOE 1987); ANSI N300-1975, *Design Criteria for Decommissioning of Nuclear Fuel Reprocessing Plants* (ANSI 1975); and DOE Order 6430.1A, *General Design Criteria*, Sections 1300-11.2 and 1321-7 (DOE 1989).	Y	The retrieval system will spray down the equipment with 150°F hot water at 3000 psi. All the contaminated water will return to the tank. Everything is sealed both with a vacuum from the tank and joints with waterproof seals. The Flexible Receiver has several access ports which, if needed, provide the ability to decontaminate its internal surfaces.

Item No.	Document and Requirement	Comply Y or N	Remarks or Comments
21	sect 5.1.6 Fire protection systems in temporary facilities provided by this project, e.g., the sluicing control room, shall be designed to meet the following applicable requirements: •DOE/EV-0043, *Standards on Fire Protection for Portable Structures* (DOE 1979)	Y	This section is applicable only to the control trailer but is exempted per Internal Memo 7F520-MEM-94-002, M. E. Manthei to D. E. Legare, "Project W-151, Tank 101-AZ Waste Retrieval System, Fire Suppression for Flexible Receiver Control Trailers," dated February 15, 1994; and, DOE Letter 94-PRJ-045, R. W. Brown, DOE, to President, WHC, "Flexible Receiver Control Trailer, Concurrence for Interpretation of DOE Standard EV-0043, 'Standard on Fire Protection for Portable Structures', August 1979", dated June 3, 1994 (distributed by CCRN #9403731).
22	sect 5.1.6 The fire alarm system shall be compatible with, and tie into, the 200 Area Hanford Site radio fire alarm system.	Y	This section is applicable only to the control trailer but is exempted per Internal Memo 7F520-MEM-94-002, M. E. Manthei to D. E. Legare, "Project W-151, Tank 101-AZ Waste Retrieval System, Fire Suppression for Flexible Receiver Control Trailers," dated February 15, 1994; and, DOE Letter 94-PRJ-045, R. W. Brown, DOE, to President, WHC, "Flexible Receiver Control Trailer, Concurrence for Interpretation of DOE Standard EV-0043, 'Standard on Fire Protection for Portable Structures', August 1979", dated June 3, 1994 (distributed by CCRN #9403731).

Item No.	Document and Requirement	Comply Y or N	Remarks or Comments
23	sect 5.4.1 Components and structures of all systems shall be designed for a DBE as specified in HPS-SDC-4.1, "Design Loads for Structures" (DOE-RL 1988b), and DOE Order 6430.1A, *General Design Criteria* (DOE 1989), for Safety Classes 1, 2, 3, and 4.	Y	For the new trailer: Per H-2-78935, the trailer is purchased to meet the requirements of SDC 4.1. For the retrofit trailer: This trailer was designed and constructed and reevaluated for SDC 4.1 per WHC-SD-WM-SA-089. For the Flexible Receiver: This has been designed for a 70 MPH (UBC requirement) wind and will withstand it per WHC-SD-W151-DA-003. All other factors (snow, earthquake, ash) are not as severe as wind so there was no need to perform calculations.
24	sect 5.4.5 The WRSS shall incorporate features that maintain the WRSS and waste tank in a safe condition if a design basis power failure occurs. Safety and health of the public and onsite personnel shall be key considerations in the design.	Y	An uninterruptible power supply is provided for the Flexible Receiver Control Panels with a generator for backup power. This will maintain equipment in a safe condition and provide power for continuing operation if a design basis power failure occurs.
25	sect 5.5 Design shall consider human factors for maintenance and operations activities, including a control panel, equipment, valve location and orientation, secondary waste handling, and facility arrangement. The design shall comply with DOE Order 6430.1A, Section 1300-12.	Y	This applies only to the controls in the trailer which is being constructed per NUREG 0700. The compliance check list for NUREG 0700 was filled out on the basis of this equipment and for both W151 an W320 trailers. Also, a system task analysis of the operation was performed to analyze operational conditions and tasks. This process will be continually evaluated during the first several operations so that we may improve those things which play a hinderance in the operation.

Item No.	Document and Requirement	Comply Y or N	Remarks or Comments
26	sect 5.8 Modular, separable confinements shall be used for radioactive and other hazardous materials to preclude contamination of fixed portions of the structure.	Y	Most if any contaminants on the flexible receiver will be located within the portion that equipment is removed. Decontamination of this should be feasible since the material is stainless steel. Any seams or joints exposed to the removed equipment will also be a suspect for collection. This equipment (after being once used) will undergo some decontamination but will more than likely be classified as radiated equipment and treated as such throughout its life.
27	sect 5.8 Surfaces should be free of crevices, ledges, and/or protrusions which could collect radioactive material.	Y	Surfaces have been designed to minimize the amount of crevices, ledges, etc.
28	sect 5.8 Penetrations shall be waterproofed for protection during decontamination efforts.	Y	All material exposed to both the weather and the spray wash system will be sealed to prevent any water seepage. The primary and secondary bags contain an absorbent (see H-2-79289) to ensure no dripping occurs.
29	sect 5.8 Fixtures and outlets shall be sealed.	Y	See # 15 remark.
30	sect 5.8 Adequate clearance shall be provided for transfer of equipment.	Y	Work will be taking place outdoors.
31	sect 5.8 Lifting lugs shall be used on large tanks or equipment.	Y	There are several hoisting lifts on various components of the receiver. For example, the bag assembly, the whole receiver assembly, or just the cutter assembly can all be individually lifted up on their own. This applies to both the 42" and the 4"-6" receivers.

Item No.	Document and Requirement	Comply Y or N	Remarks or Comments
32	sect 5.8 Modular radiation shielding shall be used in lieu of, or in addition to, monolithic shielding walls.	N/A	This will be determined by the Radiation Work Permit and is not applicable to the qualification of the receiver.
33	Drawings shall comply to the standards listed in WHC-CM-6-3.	Y	All Flexible Receiver drawings have been drawn to the standards listed in the manual with the exception of the vendor supplied drawings of high pressure pump trailer and the old grout trailer.
The following requirements are taken from WHC-SD-W151-SDRD-001, Supplemental Design Requirements Document, 241-AZ-101 Waste Retrieval System.			
34	3.4.1.1 The Flexible Receiver Assemblies shall be designed to remove new and/or existing profile and sludge thermocouple trees; mixer pumps and new/ existing transfer pumps from the 101-AZ tank.	Y	Drawings H-2-79222 and H-2-79348 provide the Flexible Receiver assemblies that will be used for removing equipment from the 101-AZ tank.
35	3.4.1.2 Waste equipment removed from the 101-AZ tank will be placed into a sealed flexible receiver for containment of radioactive and chemical contamination during removal and transport. The associated removal and mounting equipment shall also be designed to maintain containment of radioactive and chemical contamination while equipment is being removed from the tank. The enclosure shall meet the requirements of Radiological Design, WHC-CM-4-9 and Hanford Radioactive Solid Waste Packaging, storage, and Disposal Requirements, WHC-EP-0063, Rev. 3.	Y	See Item #10

Item No.	Document and Requirement	Comply Y or N	Remarks or Comments
36	3.4.1.3 Fire retardant materials shall be used for the flexible receiver material.	Y	The Flexible Receiver is constructed of stainless steel and a flexible bag which meets the fire protection requirements of MIL-C-43006 Type I.
37	3.4.1.4 The receiver shall, as a goal, have a leak rate of less than 0.3 volume percent per hour, for a 12-hour period, at an initial negative pressure differential of 4 inches of water. After bagging is completed, the solid waste article shall be placed into a trough or similar container to prevent any leakage of waste to the surrounding soil. The bag is only intended for contamination control during removal.	Y	The Flexible Receiver containment is provided by impervious stainless steel and receiver bags which are leak tested to more stringent criteria per H-2-79326.
38	3.4.1.5 Equipment will be installed and removed using a crane.	Y	To be demonstrated in Qualification Testing.
39	3.4.1.6 Removal equipment will require remote operation from a distance to minimize radiation exposure to personnel. ALARA principles shall be used at all times in the design of the equipment.	Y	Equipment operation is performed from inside the control trailer at a remote location.
40	3.4.1.7 Design of the flexible receiver shall allow recovery action for failed in-tank riser components in high radiation areas which may include remote reinsertion of components.	Y	To be demonstrated in Qualification Testing.

Item No.	Document and Requirement	Comply Y or N	Remarks or Comments
41	3.4.1.8 Removal equipment must be operable in ambient conditions from 35°F to 120°F. Equipment will not be used during high wind, rain or freezing conditions.	Y	Equipment has been designed for these conditions.
42	3.4.1.9 The Flexible Receiver Assembly will interface with the wash assembly (section 3.4.3) on the riser.	Y	To be demonstrated in Qualification Testing.
43	3.4.1.10 The lifting mechanism hook speed shall have a range of 1-8 fpm. Speed control shall be obtained by modifying the hydraulics of an existing crane. The new speed control system shall not eliminate or reduce existing crane capabilities.	Y	This requirement is provided by the "Specification for Modification to Grove Crane at 1100" V-W151-0003.
44	3.4.1.11 Hook speed, position indicator, and hook load with associated readout (located in crane cab) shall be provided for the existing site crane. The equipment mounted on the crane shall be weatherproof.	Y	This requirement is provided by the "Specification for Modification to Grove Crane at 1100" V-W151-0003.
45	3.4.1.12 Total weight of the new components (to be lifted as a unit) and the rigging shall be within the capacity of existing site cranes.	Y	

Item No.	Document and Requirement	Comply Y or N	Remarks or Comments
46	3.4.1.13 A secondary receiver bag assembly will be secured around the bottom of the primary flexible receiver to contain residual contamination between the bottom of the primary receiver bag and the cable seal. An absorbent material will be placed in the bag to absorb any liquid that may be present.	Y	Provided by the Flexible Receiver Leak Containment Bag/Stand Assemblies, H-2-79297 and H-2-79362. Their function will be demonstrated in Qualification Testing.
	Spray Wash System, High Pressure Pump		
47	3.4.2.1 Hot water shall be furnished on site from the 200 Area boiler plant. The 200°F maximum water will be tanker trucked to 101-AZ.	Y	To be demonstrated in Qualification Testing.
48	3.4.2.2 The high pressure spray wash system supply shall have an operating discharge pressure of 3000 psi and will be designed and fabricated per ASME B31.1, as applicable.	Y	This requirement is provided by "Procurement Specification for High Pressure Hot Water System", WHC-S-037 and documented in CVI file 22515.
49	3.4.2.3 The portable high pressure spray wash system shall be totally enclosed and/or weather proof to the extent possible, except for the areas open for venting and connectors.	Y	This requirement is provided by "Procurement Specification for High Pressure Hot Water System", WHC-S-037 and documented in CVI file 22515.
50	3.4.2.4 The spray wash system shall have a relief valve, unloader or vent system such that there is no possibility of over pressurization of the system.	Y	This requirement is provided by "Procurement Specification for High Pressure Hot Water System", WHC-S-037 and documented in CVI file 22515.

Item No.	Document and Requirement	Comply Y or N	Remarks or Comments
51	3.4.2.5 The spray wash system piping shall be insulated with a moisture resistant material.	Y	Spray wash system piping is not insulated and does not need to be. Adequate guards are in place to protect personnel from high temperature piping. This requirement will be revised to reflect the accepted condition of the piping prior to its field use for either project W-151 or W-320.
52	3.4.2.6 All piping or hoses associated with the hot water supply shall also have sufficient protection for the safety of operating personnel.	Y	This requirement is provided by "Procurement Specification for High Pressure Hot Water System", WHC-S-037 and documented in CVI file 22515. Flexible hoses will also be administrativlely controlled to protect personnel.
53	3.4.2.7 The system shall be mounted on a highway rated Department of Transportation approved trailer. The trailer shall be suitable for travel over loose gravel.	Y	This requirement is provided by "Procurement Specification for High Pressure Hot Water System", WHC-S-037 and documented in CVI file 22515.
54	3.4.2.8 A replaceable or flushable filter shall be provided for the water supply with a capacity of up to 50 gpm to prevent plugging of the washer spray nozzles.	Y	Inlet water filter is provided. See CVI file 22515.
55	3.4.2.9 The design shall include a flexible discharge supply hose capable of safely handling the 300 psi hot water being pumped to the high pressure spray header over a distance of 200 feet.	Y	This requirement is provided by "Procurement Specification for High Pressure Hot Water System", WHC-S-037 and documented in CVI file 22515.

Item No.	Document and Requirement	Comply Y or N	Remarks or Comments
56	3.4.2.10 Necessary valving, piping, remote controls and other instrumentation shall be supplied as required. The high pressure spray system will be operated by either a gasoline/diesel motor or electric motor and come complete with remote controls and all necessary safety features.	Y	This requirement is provided by "Procurement Specification for High Pressure Hot Water System", WHC-S-037 and documented in CVI file 22515.
57	3.4.2.11 The spray system shall be capable of delivering between 20 and 50 gpm at 3000 psig, suitable for both the 4/6" and the 42" spray ring assemblies.	Y	This requirement is documented in the CVI file 22515.
	Decontamination Wash Assemblies		
58	3.4.3.1 Hardware removed from tank 101-AZ will have supernate/sludge washed from the external and internal surfaces during the equipment removal process using the spray wash system.	Y	The washing hardware is depicted on drawing H-2-79256 "TWRS 101-AZ Washer Assembly".
59	3.4.3.2 Wash equipment should be designed for cleaning hardware, with complete circumference coverage, at a nominal vertical removal rate of one foot per minute.	Y	The washing hardware is depicted on drawing H-2-79256 "TWRS 101-AZ Washer Assembly".

Item No.	Document and Requirement	Comply Y or N	Remarks or Comments
60	3.4.3.3 Nozzles with a flat spray configuration and an operating pressure of 3000 psi shall be used in the washer assembly. Nozzles shall be orientated such that both top and bottom sides of protrusions on the removed components exterior are thoroughly rinsed, in addition to the vertical surfaces.	Y	The washing hardware is depicted on drawing H-2-79256 "TWRS 101-AZ Washer Assembly".
61	3.4.3.4 The 4/6" spray ring shall be sized for 20-25 gpm flow rate at 3000 psig. The 42" spray ring shall be sized for 40-50 gpm flow rate at 3000 psig.	Y	The washing hardware is depicted on drawing H-2-79256 "TWRS 101-AZ Washer Assembly".

Item No.	Document and Requirement	Comply Y or N	Remarks or Comments
62	3.4.5.1 Trailer a. Provide environmentally controlled trailer housing instrumentation, electrical & control equipment, operators, monitors, VCRs, displays and recording equipment. Trailer shall house Instrumentation and Control (I&C) equipment for the flexible receiver, washer, and radiation monitoring.	Y	The Flexible Receiver Control Trailer is depicted on drawing H-2-78935, "W151 - TWRS Trailer Assembly".
	b. All suitable I&C equipment shall be installed in 19 inch racks to the extent possible.	Y	
	c. All cables and wiring inside of the trailer shall conform to the requirements NFPA-70.	Y	
	d. Trailer shall have smoke detection with audible alarm.	Y	See Item No. 21
	e. Maximum power to the trailer shall be limited to 440 VAC, 3 phase.	Y	
	f. Trailer shall have personnel exits at opposite ends of the trailer which open from the inside. Rear cargo doors do not count as exits.	Y	

Item No.	Document and Requirement	Comply Y or N	Remarks or Comments
	g. Environmental controls shall consist of the following:	Y	
	1. Cooling capacity to achieve and maintain a 70°F condition with an outside ambient temperature of 115°F, full solar insulation, and heat loads from the I&C equipment.	Y	
	2. Heating capacity to achieve and maintain a 70°F with an ambient temperature of 10°F.	Y	
	3. Controls shall be designed for local operator control and be user friendly. Ergonomics shall be used in the lay-out of controls and consoles.	Y	
	4. Heating/cooling unit can be one combination unit.	Y	
	5. Unit shall incorporate an integral fan for air circulation, and provide for outside air exchanges.	Y	
	6. The system shall also be designed based on other ambient conditions specified in Standard Design Criteria (SDC) 5.1.	Y	

Item No.	Document and Requirement	Comply Y or N	Remarks or Comments
63	3.4.5.2 Flexible Receiver Control Console (FRCC)		To be demonstrated in Qualification Testing.
	a. The FRCC shall control the operation of the Flexible Receiver, including the thermocouple liquid removal tool, in a manually actuated sequence (controller forces operator to a fixed sequence) with manual emergency override controls available to secure the operation in a safe configuration.	Y	
	b. The sequence, interlocks and indicating lights shall be provided for equipment operation.	Y	
	c. FRCC shall be located in the trailer described in 3.4.5.1.	Y	
	d. Parameters shall be displayed in engineering units.	Y	
	e. Three CCTV monitors and cameras shall be provided to monitor field operations.	Y	
	f. Operators shall be able to, through a front panel select or on a multiplexer, view any camera on any monitor.	Y	

Item No.	Document and Requirement	Comply Y or N	Remarks or Comments
	g. The camera used to view the retrieved material in the gamma assay region shall include superimposed height and/or time indication on screen for correlation with gamma energy analysis results. The gamma assay system will store data by time stamp as part of its operation. The subject camera data will be actively recorded.	Y	
64	3.4.5.3 Wash Assembly Control Console (WACC)		To be demonstrated in Qualification Testing.
	a. The WACC shall control the operation of the spray wash system in a manually actuated sequence.	Y	
	b. The sequence, interlocks and indicating lights shall be provided on the control panel for the system operator. (May be shared with FRCC.)	Y	
	c. WACC is located in the trailer (3.4.5.1).	Y	
	d. Parameters shall be displayed in engineering units.	Y	
	e. Controls and instrumentation shall be included in the console operating panel. (See Figure 10 for spray system configuration.)	Y	

Item No.	Document and Requirement	Comply Y or N	Remarks or Comments
65	3.4.5.4 Radiation Monitoring Control Console Radiation monitoring controls (computer data acquisition) and readout shall be installed in 19" racks (to the extent practical) with other control equipment in the AZ tank farm control room.	Y	See drawing H-2-78931 "TWRS Control Console".
66	3.4.5.5 Electrical System a. The electrical system in the trailer shall convert the supplied 440 VAC, 3 phase as necessary for use by the instrumentation, electrical & control equipment, monitors, displays and recording equipment, lighting and environmental equipment. b. The installation shall be per the latest edition of the National Electric Code (NFPA 70).	Y Y	The Flexible Receiver Control Trailer is depicted on Drawing H-2-78935, "W151 - TWRS Trailer Assembly".

PART II - DESIGN VERIFICATION BY OPERATIONAL TESTING

1.0 TEST ITEM IDENTIFICATION

The Flexible Receiver (FR) is a remotely operated device to remove equipment contaminated with radioactive and hazardous waste from buried tanks or below-ground installations with minimal exposure to the operating personnel and no release of contamination to the environment. This equipment will be attached to a pipe flange or plate at the top of the proposed removed equipment. The Flexible Receiver will wash the equipment off as it is being removed, check for the amount of radiation on the equipment, insert the equipment in a fabricated bag, and seal the equipment in this bag for disposal or storage.

All of the controls of the equipment are located in a trailer with interlocks on each of the control switches so that accidental operation of equipment can't happen without the prior proper sequence of operations being performed.

Figure 1 shows a breakdown of the equipment by systems. There are two types of receivers; one that can remove equipment from a 42" diameter riser (see Figure 2) and this is referred to as the 42", and the second one can remove equipment from 4" and 6" diameter risers (see Figure 3) and is referred to as the 4"-6" Flexible Receiver. The Flexible Receiver systems are described on drawings H-2-79336 for the 4"-6" Flexible Receiver and H-2-79342 for the 42" Flexible Receiver.

NOTE: The GAMMA ASSAY SYSTEM will not be tested by this document but has been tested per WHC-SD-W151-ATP-001.

1.1 FLEXIBLE RECEIVER SYSTEMS

FLEXIBLE RECEIVER BAG AND CARTRIDGE ASSY	- Frame and special bag that equipment is pulled up and into.
FLEXIBLE RECEIVER TOP ASSY	- Assembly that closes the bottom of the bag, cinches the wire rope cables, cuts the cables and cuts the bag between the sealed sections of the bag.
CCTV CAMERAS	- Used to remotely view operation
GAMMA ASSAY SYSTEM AND SPOOL ASSY	- Monitors radiation of equipment being pulled out, provides access to the inside of the spool assembly and is the mounting for internal cameras.

SPRAY WASH	- Sprays down equipment being extracted.
SECONDARY BAG ASSY	- Acts as secondary bag over the end of the primary bag that was cut.

Figure 1. Flexible Receiver Systems

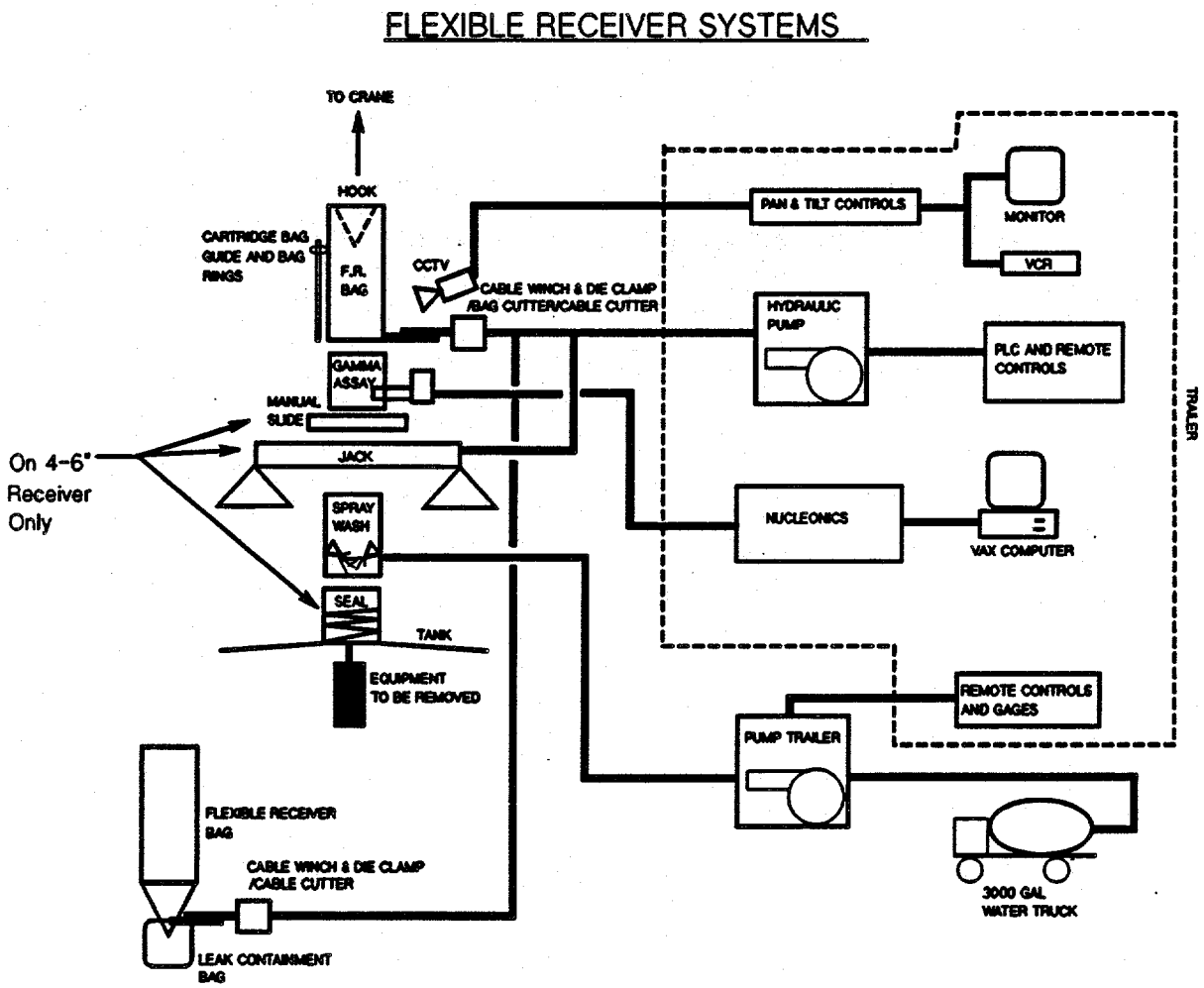

Figure 2. Typical 42" Flexible Receiver Located On A Tank

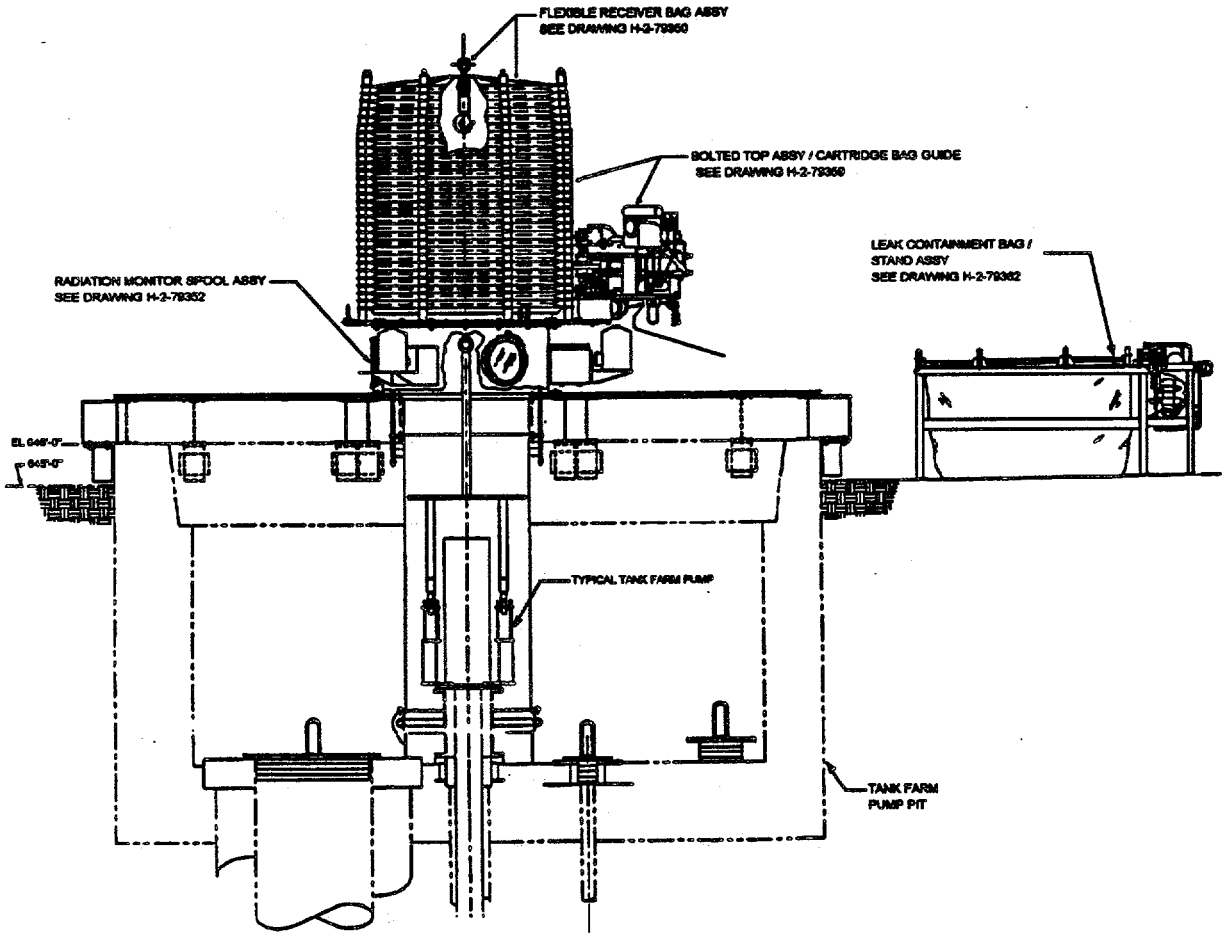

Figure 3. Typical 4"-6" Flexible Receiver Located On A Tank

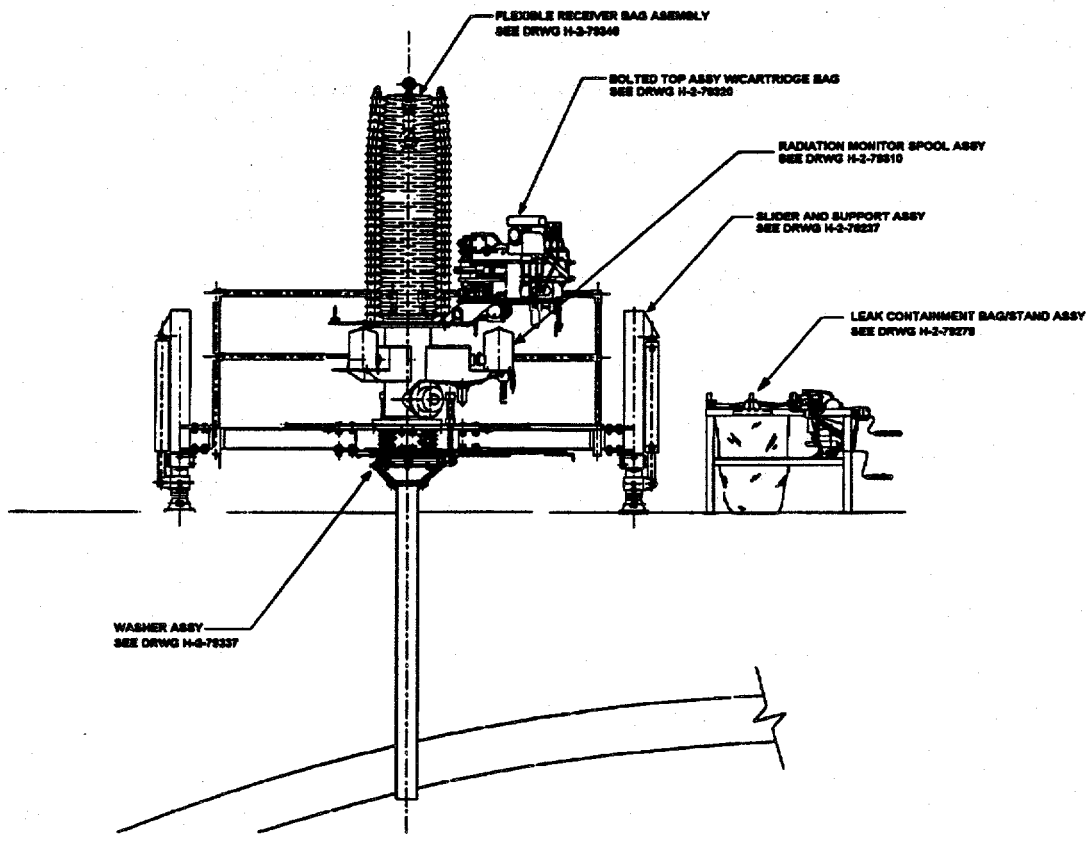

2.0 GENERAL DESCRIPTION

2.1 TEST OBJECTIVES

The objective of this test is to qualify the design of the 42" and 4"-6" Flexible Receiver systems for field use by demonstrating environmentally safe removal of a Tank Farm pump mock-up from a Tank Farm riser mock-up. Testing will also demonstrate the performance of supporting equipment.

The Flexible Receiver and the Secondary Bagging equipment shall be tested to verify successful operation of the equipment to the following criteria:

a. The Flexible Receiver can be placed on a riser and connections made to the supporting equipment.

b. The Flexible Receiver bag can accept equipment and be successfully sealed.

c. The Secondary Bagging System encases the seal of the primary Flexible Receiver bag.

d. The flexible bag(s) do not tear and maintain integrity during the entire test.

e. The FR control system operates in the fail safe forced sequence mode.

f. The FR control system will operate in the manual override mode (out of sequence operations).

g. The CCTV Video system monitors and records the removal of the test item.

h. The spray wash system operates without leaks and effectively provides coverage (4"-6" only).

i. The item being removed can be reinserted to a depth of 8 feet and the bag reinstalled onto the vertical bag supports.

j. The system prohibits momentary mechanical fluctuations due to the application of system power, including power interruptions.

3.0 TEST CONDITION LIMITS

3.1 OPERATIONAL LIMITS

No unique or unusual industrial, radiological, chemical, or critical safety hazards are involved with performance of this test.

Testing will be stopped due to any safety concern, equipment failure, or at the discretion of the Test Director. Resumption of testing will continue when the concerns have been addressed and/or repairs have been completed to the satisfaction of the Test Director.

3.2 ENVIRONMENTAL LIMITS

The crane pulling operation beginning with step 8.3.2.11 shall NOT begin if the wind velocity exceeds 10 MPH. If the pulling operation has begun and the weather changes for the worse, testing shall be stopped and the test equipment secured so that no damage will be incurred.

4.0 FACILITIES, EQUIPMENT, AND MATERIALS

4.1 TEST FACILITY

Testing will be performed at the Cold Test Facility, located west of Route 4 on Route 11A between the 200 East and 200 West Areas. The Cold Test Facility consists of a 10'-0" inside square vault, 11'-0" deep. Extending below the bottom of the vault floor is a 6'-0" diameter caisson 53'-0" deep.

As an option portions of this test may be performed at the Equipment Testing Laboratory (305 Bldg), or other suitable facility.

4.2 EQUIPMENT

- The on-site modified 110 Ton "GROVE" crane or equal.
- A vacuum system that will simulate the negative pressure within the waste tank. Vacuum pressure is equal to or greater then 0.25 inches of water but will not exceed 2 inches of water during operation.
- Electrical power for the Flexible Receiver control trailer and pump truck 480V 3PH 60HZ and 200 Amps for control trailer and 200 Amps for the HPS pump trailer.
- 3000 gallon water truck filled with water to 150-175^{0}F
- The high pressure spray trailer
- The 42" or 4"-6" Flexible Receiver
- The 42" or 4"-6" Secondary Bagger
- A 70 foot long Flexible Receiver bag for the 42" or 4"-6" FR
- A 42" secondary bag for the 42" or 4"-6" FR
- A simulated process pump and thermocouple

- Control trailer with hydraulic pump, control racks, video systems, etc
- Emergency pole for placing rings on FR poles when lowering the receiver bag.
- Stop watch
- Spare components, such as test bags, cabling, and cable sleeves that will be expended during testing.
- Safety equipment: hard hat, leather gloves, safety glasses, steel toed shoes
- Replacement bulbs for control panel lights.
- 3 VHS tapes (minimum)
- PLC accessories

5.0 SAFETY

NOTE: THE INFORMATION IN THIS SECTION SHALL BE TOLD TO ALL PERSONNEL IN OR AROUND THE TEST AREA BEFORE TESTING BEGINS. SAFETY IS THE RESPONSIBILITY OF ALL INDIVIDUALS. ALL CONCERNS SHOULD BE DIRECTED TO THE TEST DIRECTOR OR APPOINTEE.

Hazards associated with the job are found in the Preliminary Safety Evaluation (WHC-SD-WM-PSE-010) with the exception of the radiological hazards which will not apply to this test. Potential hazards are: over head objects (crane), tripping (wires and hoses on the ground), pinch points, and exposed 3000 psig high pressure 150°F hot water and hydraulic lines. All personnel within the crane operating zone will wear safety glasses, a hard hat, and steel toed shoes. Individuals working on or near the high pressure pump trailer/or its hoses are advised to wear hearing protection, a hard hat, safety glasses, and leather gloves when operating.

The test area will be kept free from nonessential personnel as directed by the Test Director. Individuals shall perform their assigned tasks in a safe manner so as to protect themselves and others from hazards and prevent damage to the property and the environment. The Test Director shall assure the safety of activities within their areas to prevent injury, property damage, or interruption of operation.

Crane operations shall be in accordance with the "Hanford Site Hoisting and Rigging Manual", (DOE-RL-92-36).

6.0 EXCEPTIONS

Exceptions to the test results will be sequentially numbered, recorded, and approved on individual Exception forms. If changes to the procedure are required during testing those changes will also be documented on an Exception Form. All exception forms will have written approval by the Test Director and Quality Assurance prior to the conclusion of testing. Whenever possible, exceptions will be approved at the time they are prepared. If required personnel are not available for approval at the time the exception is prepared then testing will be allowed to continue. Exception approval to continue testing may be written, verbal, or per telecon.

7.0 PERSONNEL REQUIREMENTS

7.1 GENERAL

Each organization participating in this test will designate personnel to assume the responsibilities and duties as defined herein for their respective roles. The designated personnel shall become familiar with this procedure and systems involved to the extent that they can perform their assigned duties.

7.2 TEST DIRECTOR

- Coordinates and directs testing.
- Acts as liaison between the participants in testing.
- Distributes the testing schedule within one week before start of testing.
- Schedules and conducts a pretest meeting with test participants before start of testing when necessary.
- Notifies the persons performing and witnessing the test 2 days before the start of testing.
- Schedules an informal test (dry run) when necessary.
- Notifies concerned parties when a change is made in the testing schedule.
- Takes necessary steps to clear exceptions to the test.
- Confirms that inspection of the system to be tested has been completed.
- Stops any test which, in the judgement of the director, may cause damage to the system or result in an Unsafe Condition.
- After verifying there is no adverse impact, may alter the sequence in which system or subsystems are tested, but not the sequence of

steps in each test.

- Ensures that environmental conditions are maintained.
- If a test is to be suspended for a period of time, ensures that the system is left in a safe mode.
- Before restarting a suspended test, reverifies the test prerequisites.
- Reviews recorded data, discrepancies, and exceptions.
- Obtains information or changes necessary to clear or resolve objections during the performance of the test.
- Signs Exception Test and Approval page when test has been performed.
- Signs Exception form when exception has been resolved.
- Obtains required approval signatures for the final test report.
- Makes sure exceptions are incorporated into this document via ECN at completion of job.

7.3 WITNESSES

(Provided by Participating Organizations)
Observers, user representatives, and witnesses shall be notified 2 days prior to testing.

- Witness the tests and provide input while considering operation under actual tank farm conditions.
- Review results of testing.
- Assist the Test Director when required.
- Sign Execution and Test Approval page when test has been performed.
- Sign Exception form when exception has been resolved.

7.4 RECORDER

- Records names of all designated personnel prior to the start of testing.
- Records test instrument identification numbers and calibration expiration dates.

- Observes tests and records test data.
- Signs Execution and Test Approval page.
- Initials and dates test steps as they are completed. On data sheets where there is not room for both the initial and date, the data may be added at the bottom of the column.
- Records exceptions on the Exception form.
- Signs Exception form when exception has been resolved.
- Notifies the Test Director at the time an objection is made.
- After the test is completed, assigns alpha numeric page numbers to added data sheets and Exception forms. Records page numbers in the Table of Contents.

7.5 TEST OPERATOR

- Performs test under direction of the Test Director.
- Provides labor, equipment, and test instruments required for performing tests.
- Confirms that all equipment required for performing test will be available at the start of testing.
- Signs the Execution and Test Approval page.

7.6 QUALITY ASSURANCE WITNESS

- Witnesses test steps are performed.
- Signs and approves test and exceptions.

7.7 COG ENGINEER

- Main Technical consultant on equipment

8.0 TEST PROCEDURE

NOTE: This procedure applies to the 42" flexible receiver only. This procedure has been performed per Revision 1 (see Appendix A for signed off steps and exceptions). The procedure for testing the 4"-6" flexible receiver is located in Section 11.0.

8.1 GENERAL SYSTEM REQUIREMENTS

Cables and pipes are all connected per the FR drawings. The system permissive includes electrical verification that the control cable(s) have been installed.

A manual operation (i.e. operator actuate a switch) is required prior to starting or continuing operation after power is applied to the controller.

Operator must manually push, twist, or turn button(s) to control the sequence for the FR assembly and Secondary Bagger equipment. The control sequence for the Flexible Receiver assembly and Secondary Bagger equipment is implemented by a manually actuated, forced sequence of events; i.e. the operator manually pushes the button for the next step in the sequence while the controller ignores any input from the operator that is out of sequence.

Operator may use a "manual control" key operated switch to by-pass the normal system interlocks and permissive (under the procedural permission of the Test Director or assigned person-in-charge) in order to deal with an unusual situation.

8.2 TEST CONDITIONS

The following items shall be performed prior to other steps of this procedure.

Initial/Date

_____ 8.2.1 Install 42" flexible receiver on CTF.

_____ 8.2.2 Install primary 70 ft bag and cables on 42" FR per drawing H-2-79359.

_____ 8.2.3 Install secondary bag and cable on leak container bag assembly.

_____ 8.2.4 Flexible receiver assembly has been properly attached to the Cold Test Facility per H-2-79218 and/or H-2-79219 and/or H-2-79220 and/or H-2-79221 and support equipment (secondary bagger, control trailer, and high pressure water pump trailer and water truck (if applicable). Ensure hook swivel is attached to the pump lifting device. Note attachment of FR may require the use of the hydraulic jacks (ONLY on 4"-6" FR) which would require operation of the hydraulic pump in the control trailer (use steps in 8.3 OPERATIONAL SEQUENCE, 8.3.1 START UP SEQUENCE, to operate pump).

_____ 8.2.5 All systems being tested have their hoses, piping, and electrical instrumentation and power properly connected per FR drawings.

_____ 8.2.6 Power is **OFF** to components of systems being tested.

- Switch DS1 "MAIN POWER" is off.
- Switch DS2 "HYDRAULIC PWR UNIT" is off.
- Switch DS3 "T1 TRANSFORMER" is off.
- Switch DS4 "HYD POWER UNIT" is off.

_____ 8.2.7 All test instruments have a valid calibration stamp attached.

_____ 8.2.8 Personnel responsible for directing and witnessing the performance of the tests described in this QTP have read and understand the operation of the equipment to be tested.

_____ 8.2.9 All personnel involved in, or witnessing, testing have met the safety requirements listed in section 5.0.

8.3 OPERATIONAL SEQUENCE

The following describes the sequence of events the Flexible Receiver Programmable Logic Controller (PLC) performs in conjunction with the operator(s) actions, and Secondary Bagger equipment. The control logic has 3 major parts: 1) Start up and initial conditions, 2) Operations performed by the Flexible Receiver, and 3) Operations performed by the Secondary Bagger.

The sequence of events are as follows: 1) Start up of equipment; 2) pull equipment out; 3) pull bag tight with cable; 4) clamp cable; 5) cut bag; 6) cut cable; 7) move bagged equipment to secondary bagger; 8) pull secondary bag tight with cable; 9) clamp cable; 10) cut cable.

If power is unexpectedly lost, the system shuts down and stops as is. Upon restoration of power, the "RESET" button is pressed and the system resumes operation at the step it was last performing before loss of power. This will be tested during the bagging operation.

8.3.1 Start Up Sequence

WARNING: Turning the HYDRAULIC POWER UNIT key switch, or the START SEQUENCE key switch to OFF, or loss of cable continuity at anytime will de-energize the master system permissive (internal coil 202). The controller will not permit any further actions until corrected.

The following is to be performed on the control panels in the trailer.

********** FLEXIBLE RECEIVER **********

_____ 8.3.1.1 Section 8.2 has been completed.

_____ 8.3.1.2 Verify all switches located on the Flexible Receiver and High Pressure Spray control panels are in the OFF

Position before start of testing.

_____ 8.3.1.3 Turn on Generator/Site Power per manufacturers instructions provided by the Test Director.

_____ 8.3.1.4 Turn Switch DS1 "MAIN POWER" to the "ON" position.

_____ 8.3.1.5 Turn Switch DS2 "HYDRAULIC PWR UNIT" to the "ON" position.

_____ 8.3.1.6 Turn Switch DS3 "T1 TRANSFORMER" to the "ON" position.

_____ 8.3.1.7 Turn Switch DS4 "HYD POWER UNIT" to the "ON" position.

_____ 8.3.1.8 Verify there is power to the FR control rack. This is denoted by a lit green lamp labeled "POWER OFF" under "SYSTEM CONTROL POWER".

_____ 8.3.1.9 Turn FR control system power ON by rotating "SYSTEM CONTROL POWER" control key to the ON position. A red panel light labeled "POWER ON" under "SYSTEM CONTROL POWER" indicates the power is applied to the Control System when lit.

_____ 8.3.1.10 Push test lamp switch labeled "LAMP TEST" and verify that all lamps are lit. If a lamp does not light, have the bulb replaced. If the lamp still fails to light, contact the COG before preceding. (This applies to ALL lamps on the Flexible Receiver and High Pressure Spray control panels.)

_____ 8.3.1.11 Verify the green pilot lamp labeled "CONTINUITY GOOD" under "SYSTEM CONTINUITY" is lit and the red pilot lamp labeled "CONTINUITY LOST" is not lit. Do not proceed until this step is verified unless directed by COG Engineer.

_____ 8.3.1.12 Turn the "START SEQUENCE" key switch to the "ON" position and verify the green pilot lamp labeled "READY" is lit.

_____ 8.3.1.13 Turn the "MANUAL CONTROL KEY" to the on position.

_____ 8.3.1.14 Push the "RESET" button.

_____ 8.3.1.15 Turn the "MANUAL CONTROL KEY" to the off position.

_____ 8.3.1.16 Turn "HYDRAULIC PWR UNIT" switch to the "ON" position and verify green lamp in the switch is lit and the Hydraulic power unit motor is operating by visual inspection.

_____ 8.3.1.17 Verify "SYSTEM HYDRAULIC PRESSURE" panel meter is reading 0 ± 100 (psig).

_____ 8.3.1.18 Verify pressure gages on hydraulic pump in trailer, cable cutter, bag cutter, cable tie clamp, winch motors, jacks on the receiver unit, bellows separator (only on the 4"-6" FR), and secondary cable tie clamp and winch motor read 0 ± 100 psig or has a blank meter screen. Only the meters associated with a function that is currently being used will show a pressure reading. If the meter reads 100 or greater before the starting that sequence, contact COG before proceeding.

_____ 8.3.1.19 Verify hydraulic connections are not leaking. If piping requires tightening, then turn "HYDRAULIC PWR UNIT" switch to the "OFF" position and resolve leak. Restart system by repeating steps 8.3.1.9? - 8.3.1.12.?

_____ 8.3.1.20 Turn "HYDRAULIC PWR UNIT" switch to the "OFF" position.

_____ 8.3.1.21 Remove the crane hook from the eyebolt of the FR bag. Raise the crane hook at a constant rate provided by the Test Director. Record the rate displayed at the FR Control Panel "CRANE HOIST ELEVATION RATE (feet per minute)" meter and the rate displayed at the crane. Verify that the displayed values are consistent.

Rate at Crane:_____ ft/min

Rate at FR Trailer:_____ ft/min

********** CAMERA MONITORING **********

_____ 8.3.1.22 Under each monitor, ensure none of the buttons 1-8 are selected by being lit or by being depressed.

_____ 8.3.1.23 Under monitor #3, flip the "POWER" switches on camera control units 1 through 5 to the "ON" position and verify the green lights labeled "POWER" is lit for each controller.

_____ 8.3.1.24 Turn on VCR's 1 through 3 by pressing "POWER" button and ensure the "POWER" light for each is on.

_____ 8.3.1.25 Turn on the "SONY" Video monitors by pushing in the "POWER" button and verify that the green light for each is lit.

_____ 8.3.1.26 Turn on the Pan Tilt power.

_____ 8.3.1.27 Select camera's 1 through 3 for monitors 1 through 3 by pushing the appropriate button under each monitor.

_____ 8.3.1.28 Move the switch from the "OFF" position to "VERTICAL" position on the time/date generators 1-3 and verify time and date are displayed on each monitor.

_____ 8.3.1.29 Set the time and date according to the manufacturers manual if date/time isn't correct.

NOTE: ON CAMERAS
Adjustments to picture can be made by adjusting either the camera controls such as the "IRIS" or "WHITE BALANCE" or adjusting the monitor controls. If adjustments to these are not sufficient in giving a clear picture, then contact the Test Director or COG engineer.

Adjustments are not part of this testing but can be accomplished through use of the manufacture's operating manual.

8.3.2 Flexible Receiver Sequence

NOTE:
The following steps are to be performed in the order presented.

********** CAMERA MONITORING **********

The following test will use Table 2 to describe the flexible receiver cameras being tested and their features. It also includes what they are viewing.

Table 2. Flexible Receiver Camera Features

Camera	OPTIONS			View
	Zoom	Pan & Tilt	Lights	
1	NO	NO	YES	Receiver spool and equipment being removed.
2	NO	YES	NO	Hydraulic gauges and top assembly on Receiver.
3	NO	YES	NO	Hydraulic gauges and top assembly on Receiver.
4	YES	YES	NO	Overall view of Receiver located on trailer.
5	YES	YES	NO	Crane operations (optional)

6	YES	NO	NO	SPARE

Initial/Date

_____ 8.3.2.1 Perform the following camera tests for each monitor (3 total). Select cameras by the following method: Press a button numbered 1-8 located under each monitor (button #1 = camera #1 and so on). When pressed in, verify the button lamp is lit. To deselect a camera, push another button just enough in to cause the first selected button to pop out and the light goes off. Use only 1 monitor per each camera (e.g., do not have all 3 monitors showing the same camera). This will not harm the system but will degrade the camera signal.

_____ 8.3.2.2 For each VCR perform the following step (each VCR corresponds to a monitor eg VCR 1 = Monitor 1 and so on): Put a VHS tape in the VCR and press the "/FF" (forward), then the "stop", then the "REW/" rewind, then the "stop", then the "play", then "PAUSE /STILL", press "PAUSE/STILL" again then "STOP" and ensure they are operational. Using camera 2, toggle the camera after pressing the "RECORD" and verify each VCR can record by playing it back.

_____ 8.3.2.3 Place a tape in each VCR and record all activities of test at the time the Flexible Receiver Bag is being pulled up.

_____ 8.3.2.4 For monitor #1 select Camera 1: On the "CAMERA 1" controls, flip "LIGHT" switch to ON and verify the receiver spool chamber can be clearly seen on the monitors. Deselect Camera 1. Repeat for monitors 2 and 3.

_____ 8.3.2.5 For monitor #1 select Camera 2: On the "CAMERA #2 PAN - TILT" controls, toggle through each position and verify operation of camera position is consistent with view in monitors. Also verify clarity of picture. Deselect Camera 2. Repeat for monitors 2 and 3.

_____ 8.3.2.6 For monitor #1 select Camera 3: On the "CAMERA #1 PAN - TILT" controls, toggle through each position and verify operation of camera position is consistent with view in monitors. Also verify clarity of picture. Deselect Camera 3. Repeat for monitors 2 and 3.

_____ 8.3.2.7 For monitor #1 select Camera 4: On the "CAMERA #3 PAN - TILT" controls, toggle through each position and verify

operation of camera position is consistent with view in monitors. Also verify clarity of picture. On "CAMERA 4" controls, operate flip "ZOOM" switch between "TELE" and "WIDE" and verify the TELE position gives a close view and a WIDE gives a wide view. Deselect Camera 4. Repeat for monitors 2 and 3.

_____ 8.3.2.8 Turn off power to camera control units 4 and 5.

_____ 8.3.2.9 Use camera 4 with camera control unit 5 by taking the cable from the camera control unit 4 and connect it to camera control unit 5.

_____ 8.3.2.10 Turn on power to camera control units 4 and 5.

_____ 8.3.2.11 For monitor #1 select Camera 5: On the "CAMERA #3 PAN - TILT" controls, toggle through each position and verify operation of camera position is consistent with view in monitors. Also verify clarity of picture. On "CAMERA 5" controls flip the "ZOOM" switch between "TELE" and "WIDE" and verify the TELE position gives a close view and the WIDE position gives a wide view. Deselect camera 5. Repeat for monitors 2 and 3.

_____ 8.3.2.12 Turn off power to camera control units 4 and 5.

_____ 8.3.2.13 Return use the camera 4 to camera control unit 4 by taking the cable from the camera control unit 5 and connect it to camera control unit 4.

_____ 8.3.2.14 Turn on power to camera control units 4 and 5.

Note: Camera control unit 6 is a spare and does not provide a video signal.

NOTE: ON CAMERAS Use cameras throughout the test to visually inspect the operation unless called out in the procedure to field-verify. If cameras are unable to sufficiently monitor the operation, then document problem and inform COG engineer.

********** SPRAY WASH **********

_____ 8.3.2.15 Turn on vacuum blower motor.

_____ 8.3.2.16 Turn main power disconnect switch on the High Pressure Spray System (HPSS) Pump Trailer to "ON".

_____ 8.3.2.17 Verify the green "SYSTEM POWER OFF" indicator light is illuminated on the HPSS Control Panel located in the FR

Control Trailer.

_____ 8.3.2.18 Turn "SYSTEM POWER" keyswitch located on the HPSS control panel to the "ON" position. Verify the red "SYSTEM POWER ON" indicator light is illuminated and that the green "SYSTEM POWER OFF" light is not illuminated.

_____ 8.3.2.19 Visually verify that the HPSS control panel meters have power in the FR Control Trailer.

_____ 8.3.2.20 Push "LAMP TEST" button and verify all indicator lamps become illuminated on the HPSS control panel in the FR Control Trailer.

_____ 8.3.2.21 Verify the green pilot lamp labeled "CONTINUITY GOOD" under "SYSTEM CONTINUITY" is lit and the red pilot lamp labeled "CONTINUITY LOST" is not lit. Do not proceed until this step is verified unless directed by COG Engineer.

_____ 8.3.2.22 Zero the "FLOW TOTALIZER" meter on the HPSS control panel according to the manufacturers instructions in the FR Control Trailer.

Note: Unless otherwise noted, the following steps will all be performed at the HPSS Pump Trailer Control Panel.

_____ 8.3.2.23 Zero the "TOTAL FLOW" meter according to the manufacturers instructions on the HPSS Pump Trailer.

_____ 8.3.2.24 Place the "LOCAL/REMOTE SWITCH" in the "LOCAL" position.

_____ 8.3.2.25 Place the "MOTOR SPEED" switch in the "MINIMUM" position at the HPSS Pump Trailer.

_____ 8.3.2.26 Verify that water in the water truck is at least half full.

_____ 8.3.2.27 Open the feed water line valve on the water truck.

_____ 8.3.2.28 Bleed air from lines to portable feed pump.

_____ 8.3.2.29 Start the portable feed pump located between the HPSS Pump Trailer and the water supply truck according to the manufacturers instructions provided by the test director.

_____ 8.3.2.30 Pull out the "STOP" button on the HPSS Pump Trailer.

_____ 8.3.2.31 Push the "PUMP CONTROL START" button at the HPSS pump trailer. Slowly increase the "MOTOR SPEED" switch to

obtain discharge pressure of 3000 +/- 100 psi or at a discharge pressure directed by the Test Director. Verify the HPSS pump begins operating.

_____ 8.3.2.32 Push the "PUMP CONTROL STOP" button at the HPSS Pump Trailer. Verify the HPSS pump operation is stopped.

_____ 8.3.2.33 Place the "MOTOR SPEED" switch in the "MINIMUM" position at the HPSS Pump Trailer.

_____ 8.3.2.34 Pull out the "PUMP CONTROL STOP" button.

_____ 8.3.2.35 Place the "LOCAL/REMOTE SWITCH" in the remote position.

NOTE: Unless otherwise noted, the following steps will be performed at the HPSS Control Panel located in the FR Control Trailer.

_____ 8.3.2.36 Put the "PUMP CONTROL MOTOR SPEED" in the minimum position in the FR Control Trailer.

_____ 8.3.2.37 Push the "PUMP CONTROL PUMP MOTOR START" button in the FR Control Trailer. Increase the "PUMP CONTROL MOTOR SPEED" to obtain discharge pressure of 1000 +/- 100 psi. Verify the HPSS pump begins operation.

_____ 8.3.2.38 Push the "PUMP CONTROL EMERGENCY STOP" button in the FR Control Trailer. Verify the HPSS pump operation is stopped.

_____ 8.3.2.39 Put the "PUMP CONTROL MOTOR SPEED" in the minimum position in the FR Control Trailer.

_____ 8.3.2.40 Push the "PUMP CONTROL PUMP MOTOR START" button in the FR Control Trailer. Increase the "PUMP CONTROL MOTOR SPEED" to obtain discharge pressure of 1000 +/- 100 psi. Verify the HPSS pump begins operation.

_____ 8.3.2.41 Push the "PUMP CONTROL STOP" button located at the HPSS Pump Trailer. Verify the HPSS Pump operation is stopped.

_____ 8.3.2.42 Push the "PUMP CONTROL STOP" button in the FR Control Trailer.

_____ 8.3.2.43 Put the "PUMP CONTROL MOTOR SPEED" at the minimum setting in the FR Control Trailer and pull out the "PUMP CONTROL STOP" button located on the HPSS Pump Trailer.

_____ 8.3.2.44 Push the "PUMP CONTROL PUMP MOTOR START" button in the FR Control Trailer. Increase the "PUMP CONTROL MOTOR SPEED"

to obtain discharge pressure of 3000 +/- 100 psi or at a discharge pressure directed by the Test Director. Verify the HPSS pump begins operation.

_____ 8.3.2.45 Verify there are no visible leaks in the HPSS or record location of leaks and/or repair leakage and then record the following. Local readings are taken at the HPSS Pump trailer control panel. Remote readings are taken at the HPSS control panel in the FR Control Trailer. "Total Flow" and "Flow Totalizer" readings are to be taken simultaneously. Verify the "Discharge Temperature" is 150°F +10°F/-30°F and that local/remote readings are consistent.

	LOCAL	REMOTE
Suction Pressure	psi	psi
Discharge Pressure	psi	N/A
Regulator Discharge Pressure	psi	psi
Suction Temperature	°F	N/A
Discharge Temperature	°F	°F
Flow / Flow Indicator	GPM	GPM
Total Flow / Flow Totalizer	Gallons	Gallons
Ammeter	amps	N/A
Frequency Meter	Hz	N/A

********** **CRANE/PULLING OPERATION** **********

_____ 8.3.2.46 Record and verify that the test pit vacuum is between 0.25 and 2 inches of water.
Pit Vacuum: _____

_____ 8.3.2.47 Record and verify that the wind velocity is 10 mph or less.
Wind Velocity: _____ mph

_____ 8.3.2.48 Attach the crane hook to the eyebolt of the FR bag. Reset the crane total height meter to zero and then raise the crane hook at a constant rate provided by the Test Director.

_____ 8.3.2.49 Start recording on all three VCR's.

_____ 8.3.2.50 Observe the bag rings coming off of the stanchions. Verify there is no binding and that the rings are not separated from the bag.

_____ 8.3.2.51 Have crane stop pulling at about 20 ft and lower equipment back down about 8 ft. Lowering the bag 8 ft will simulate rewashing a section of the pump. Raise the bag 8 ft. After raising the bag the bag should not have overlapped on itself. Performing the next step is at the discretion of the Test Director. Lower the equipment 10 -15 ft using the emergency ring replacing rod. Verify emergency rod with a hook can help in putting the rings back on the guide poles. Note: When the emergency ring replacing rod is used, the access window needs to be removed causing minimal negative pressure in the bag to facilitate ring replacement.

_____ 8.3.2.52 Start raising the bag until the closure indexing lines are in-line (Indexing lines are the lines marked on the stanchions and the first horizontal line on the bag). **STOP** raising the bag when the indexing lines are in alignment.
Record the crane hook elevation _____ ft.

_____ 8.3.2.53 Slowly reduce pressure on the HPSS pump by turning the "PUMP CONTROL MOTOR SPEED" to the minimum setting in the FR Control Trailer and press the stop button.

_____ 8.3.2.54 Stop the portable feed pump and turn off the feed line valve on the water truck.

********** **BAGGING OPERATION** **********

_____ 8.3.2.55 Turn "HYDRAULIC PWR UNIT" switch to the "ON" position.

_____ 8.3.2.56 At the FR control panel, turn and HOLD the "WINCH MOTORS" switch in the "ON" position for 30 to 45 seconds after the cables have stopped (visually determined by camera) and verify wire rope tightens around the bag forming seals both above and below the cutting blade and the bag tie wraps break without tearing the bag. Verify amber light on switch is lit. Verify and record "WINCH MOTORS" "HYDRAULIC PRESSURE" reach 1250 $\pm$ 200 psig from the control panel meter and local gauge on the receiver.
Control Panel: _____ psig Local Gauge: _____ psig

_____ 8.3.2.57 Release the "WINCH MOTORS" switch letting it spring return to the "OFF" position. Verify amber light in the switch is not lit. Verify and record "WINCH MOTORS" "HYDRAULIC PRESSURE" reach 0 $\pm$ 100 psig from the local

gauges on the receiver.
Local Gauge:_____psig

********** Loss Power/ Sequence Resume Test**********

_____ 8.3.2.58 Turn the "SYSTEM CONTROL POWER " key switch to the "OFF" position.

_____ 8.3.2.59 Wait 5 to 10 seconds, then turn the "SYSTEM CONTROL POWER" key switch to the "ON" position, press and release the "RESET" button.

_____ 8.3.2.60 Verify the sequence continues by "HYDRAULIC POWER" light switch illuminated, hydraulic pump is running and by performing the next step which is crimping the cable. If the next step cannot be performed, then Stop test and contact COG engineer or Test Director.

****

_____ 8.3.2.61 At the FR control panel in the trailer, turn the "UPPER CABLE CLAMP" switch to "CRIMP" position and hold until pressure on the control panel meter "HYDRAULIC PRESSURE" reaches 3000 ± 300 psig. Verify amber light on switch is lit. Record "UPPER CABLE CLAMP" "HYDRAULIC PRESSURE" from the control panel meter and local gauges on the receiver.
Control Panel: _____psig Local Gauge:_____psig

_____ 8.3.2.62 Return "UPPER CABLE CLAMP" switch to the "OFF" position. Verify amber light on switch is not lit. Verify and record "UPPER CABLE CLAMP" "HYDRAULIC PRESSURE" returned to 0 ± 100 psig from the local gauge on the receiver.
Local Gauge:_____psig

_____ 8.3.2.63 Turn the "UPPER CABLE CLAMP" switch to "OPEN" position and hold until pressure reading on the control panel meter "UPPER CABLE CLAMP HYDRAULIC PRESSURE" reaches at least 500 ± 200 psig. Verify amber light on switch is lit. Record "UPPER CABLE CLAMP HYDRAULIC PRESSURE" from the control panel meter and local gauges on the receiver.
Control Panel: _____psig Local Gauge:_____psig

_____ 8.3.2.64 Return "UPPER CABLE CLAMP" switch to the "OFF" position. Verify amber light on switch is not lit. Verify and record "UPPER CABLE CLAMP" "HYDRAULIC PRESSURE" returned to 0 ± 100 psig from the local gauges on the receiver.
Local Gauge:_____psig

_____ 8.3.2.65 At the FR control panel in the trailer, turn the "LOWER

CABLE CLAMP" switch to "CRIMP" position and hold until pressure on the control panel meter "LOWER CABLE CLAMP HYDRAULIC PRESSURE" reaches 3000 ± 300 psig. Verify amber light on switch is lit. Record "LOWER CABLE CLAMP HYDRAULIC PRESSURE" from the control panel meter and local gauges on the receiver.
Control Panel: _____ psig Local Gauge: _____ psig

_____ 8.3.2.66 Return "LOWER CABLE CLAMP" switch to the "OFF" position. Verify amber light on switch is not lit. Verify and record "LOWER CABLE CLAMP" "HYDRAULIC PRESSURE" returned to 0 ± 100 psig from the local gauges on the receiver.
Local Gauge: _____ psig

_____ 8.3.2.67 Turn the "LOWER CABLE CLAMP" switch to "OPEN" position and hold until pressure on the control panel meter "LOWER CABLE CLAMP HYDRAULIC PRESSURE" reaches at least 500 ± 200 psig. Verify amber light on switch is lit. Record "LOWER CABLE CLAMP HYDRAULIC PRESSURE" from the control panel meter and local gauges on the receiver.
Control Panel: _____ psig Local Gauge: _____ psig

_____ 8.3.2.68 Return "LOWER CABLE CLAMP" switch to the "OFF" position. Verify amber light on switch is not lit. Verify and record "LOWER CABLE CLAMP HYDRAULIC PRESSURE" returned to 0 ± 100 psig from the local gauges on the receiver.
Local Gauge: _____ psig

_____ 8.3.2.69 At the FR control panel in the trailer, turn the "BAG CUTTER" switch to the "CLOSE" position and hold until pressure on the control panel meter "BAG CUTTER HYDRAULIC PRESSURE" reaches at least 1000 ± 300 psig, then return switch to the "OFF" position. Verify that the "BAG CUTTER OPENING" amber light is only lit while performing operation. Record final "BAG CUTTER HYDRAULIC PRESSURE" from the control panel meter and local gauges on the receiver. Also visually verify blades at the FR fully closed and the bag is cut.
Control Panel: _____ psig Local Gauge: _____ psig

_____ 8.3.2.70 Turn the "BAG CUTTER" switch to the "OPEN" position and hold until pressure on the control panel meter "BAG CUTTER HYDRAULIC PRESSURE" reaches at least 500 ± 100 psig or until blades fully open, then return switch to the "OFF" position. Verify that the "BAG CUTTER/CLOSING" amber light is only lit while performing operation. Record final "BAG CUTTER HYDRAULIC PRESSURE" from the control panel meter and local gauges on the receiver.
Control Panel: _____ psig Local Gauge: _____ psig

CAUTION: **In the following step do not hold the cable cutter switch in the "ON" position after the cable has been cut, this will damage the cable cutter.**

_____ 8.3.2.71 At the FR control panel in the trailer, turn the "CABLE CUTTER UPPER" switch to the "ON" position and hold for 5 sec. or until the cable has been cut, then release the switch to spring return to the "OFF" position. Verify amber light on switch is only lit when switch is in the "ON" position. Visually verify that upper cable has been fully cut and that the clamp has held. (Field verification may also be used.)

CAUTION: **In the following step do not hold the cable cutter switch in the "ON" position after the cable has been cut, this will damage the cable cutter.**

_____ 8.3.2.72 At the FR control panel, turn the "CABLE CUTTER LOWER" switch to the "ON" position and hold for 5 sec. or until the cable has been cut, then release the switch to spring return to the "OFF" position. Verify amber light on switch is only lit when switch is in the "ON" position. Visually verify that lower cable has been fully cut and that the clamp has held. (Field verification may be used.)

_____ 8.3.2.73 Verify the FR bag is fully cut.

_____ 8.3.2.74 Verify cable is tight around both ends of the bag and has not slipped off.

8.3.3 Secondary Bagger Operations

The sealed end of the primary bag is placed in the Secondary bagger machine. A second bag is applied over the lower portion of the Primary bag to provide a secondary "back-up" barrier. The secondary bag is intended to contain contamination on or between the upper cable seal and the bottom of the primary bag.

_____ 8.3.3.1 Using the crane move the bagged equipment over to the secondary bagging station and place primary bag in secondary bag approximately 2 to 3 feet. Stop so that the cable on the Secondary Containment Assembly is between the rings of the bag.

_____ 8.3.3.2 At the FR control panel, turn and HOLD the "WINCH MOTORS" switch in the "ON" position for 30 to 45 seconds after the cables have stopped (visually determined by camera) and verify wire rope tightens around the bag forming seals both above and below the cutting blade and the bag

tie wraps break without tearing the bag. Verify amber light on switch is lit. Verify and record "WINCH MOTORS" "HYDRAULIC PRESSURE" reach 1250 ± 200 psig from the control panel meter and local gauge on the receiver.
Control Panel: _____ psig Local Gauge: _____ psig

_____ 8.3.3.3 Return "WINCH MOTOR" switch to the "OFF" position. Verify amber light in the switch is not lit. Verify and record "WINCH MOTORS HYDRAULIC PRESSURE" reach 0 ± 100 psig from the local gauges on the secondary bagger.
Local Gauge: _____ psig

_____ 8.3.3.4 At the FR control panel under "SECONDARY CONTROL SYSTEM" in the trailer, turn the "CABLE CLAMP" switch to "CRIMP" position and hold until pressure on the control panel meter "CABLE CLAMP HYDRAULIC PRESSURE" reaches 3000 ± 300 psig. Verify amber light in the switch is lit when holding. Record "CABLE CLAMP HYDRAULIC PRESSURE" from the control panel meter and local gauges on the secondary bagger.
Control Panel: _____ psig Local Gauge: _____ psig

_____ 8.3.3.5 Return "CABLE CLAMP" switch to the "OFF" position. Verify amber light in the switch is not lit. Verify and record "CABLE CLAMP HYDRAULIC PRESSURE" returned to 0 ± 100 psig from the local gauges on the secondary bagger.
Local Gauge: _____ psig

_____ 8.3.3.6 Turn the "CABLE CLAMP" switch to "OPEN" position and hold until pressure on the control panel meter "CABLE CLAMP HYDRAULIC PRESSURE" reaches 500 ± 200 psig. Verify amber light in the switch is lit when holding. Record "CABLE CLAMP HYDRAULIC PRESSURE" from the control panel meter and local gauges on the secondary bagger.
Control Panel: _____ psig Local Gauge: _____ psig

_____ 8.3.3.7 Return "CABLE CLAMP" switch to the "OFF" position. Verify amber light in the switch is not lit. Verify and record "CABLE CLAMP HYDRAULIC PRESSURE" returned to 0 ± 100 psig from the local gauges on the secondary bagger.
Local Gauge: _____ psig

CAUTION: In the following step do not hold the cable cutter switch in the "ON" position after the cable has been cut, this will damage the cable cutter.

_____ 8.3.3.8 On the FR control panel under "SECONDARY CONTROL SYSTEM" turn the "CABLE CUTTER" switch to the "ON" position and

hold for 5 sec. or until the cable has been cut, then release the switch to spring return to the "OFF" position. Verify amber light on switch is only lit when switch is in the "ON" position. Visually verify that cable has been fully cut and that the clamp has held. (Field verification may also be used.)

_____ 8.3.3.9 Lower the encapsulated simulated pump to the ground. Block as required to prevent the pump from moving. Remove the crane lifting hook from the bag eye.

_____ 8.3.3.10 Stop recording on the VCR's.

_____ 8.3.3.11 Turn the "HYDRAULIC PWR UNIT" switch to the "OFF" position. Turn the "START SEQUENCE" switch to the "OFF" position. Turn the "SYSTEM CONTROL POWER" switch to the "OFF" position.

8.3.4 Manual Control

The use of MANUAL CONTROL requires the use of a key switch. When the MANUAL CONTROL key switch is placed in the ON position, the amber light by the MANUAL CONTROL key switch lights and the controller performs any requested operation without regard to the interlocks or sequence.

NOTE: Operation of the MANUAL CONTROL key switch will disrupt the control sequence. Once the MANUAL CONTROL key switch is used to perform an out of sequence action, the remaining operations must be completed under manual control.

Initial/Date

_____ 8.3.4.1 Verify there is power to the FR control rack. This is denoted by a lit green lamp labeled "POWER OFF" under "SYSTEM CONTROL POWER".

_____ 8.3.4.2 Turn FR control system power ON by rotating "SYSTEM CONTROL POWER" control key to the ON position. A red panel light labeled "POWER ON" under "SYSTEM CONTROL POWER" indicates the power is applied to the Control System when lit.

_____ 8.3.4.3 Turn the "START SEQUENCE" key switch to the "ON" position and verify the green pilot lamp labeled "READY" is lit.

_____ 8.3.4.4 Turn the "MANUAL CONTROL KEY" to the on position.

_____ 8.3.4.5 Turn "HYDRAULIC PWR UNIT" switch to the "ON" position and verify green lamp in the switch is lit and the Hydraulic power unit motor is operating by visual inspection.

NOTE: The following manual steps are to be field verified since this is only a verification that a function operates.

_____ 8.3.4.6 On the FR control panel in the trailer, turn and HOLD the "WINCH MOTORS" switch to the "ON" position and verify motors are operating. Switch to the "OFF" position and verify the motors stop running.

_____ 8.3.4.7 On the FR control panel in the trailer under the "SECONDARY / CONTROL / SYSTEM", turn and HOLD the "WINCH MOTOR" switch to the "ON" position and verify motor is operating on the secondary bag receiver. Switch to the "OFF" position and verify it stops running.

_____ 8.3.4.8 On the FR control panel in the trailer, turn the "UPPER / CABLE CLAMP" switch to "CRIMP" position and verify panel amber light on switch is lit and in the field, movement of crimper. **DO NOT HOLD FOR A LONG PERIOD OF TIME, ONLY VERIFY MOVEMENT OF ACTUATOR.**

_____ 8.3.4.9 Release the "UPPER CABLE CLAMP" switch so it spring returns to the "OFF" position. Verify amber light in the switch is not lit and in the field, crimper does not move.

_____ 8.3.4.10 Turn the "UPPER CABLE CLAMP" switch to "OPEN" position and verify the amber light in the switch is lit and in the field, movement of crimper. **DO NOT HOLD FOR A LONG PERIOD OF TIME, ONLY VERIFY MOVEMENT OF ACTUATOR.**

_____ 8.3.4.11 Release the "UPPER CABLE CLAMP" switch to the "OFF" position. Verify the amber light in the switch is not lit and in the field, verify the crimper does not move.

_____ 8.3.4.12 On the FR control panel under "SECONDARY CONTROL SYSTEM" turn the "CABLE CLAMP" switch to "CRIMP" position and verify the amber light in the switch is lit and in the field verify movement of the crimper. **DO NOT HOLD FOR A LONG PERIOD OF TIME, ONLY VERIFY MOVEMENT OF ACTUATOR.**

_____ 8.3.4.13 Release the "CABLE CLAMP" switch to the "OFF" position. Verify the amber light in the switch is not lit and in the field verify the crimper does not move.

_____ 8.3.4.14 Turn the "CABLE CLAMP" switch to "OPEN" position and verify the amber light in the switch is lit. In the field verify movement of the crimper. **DO NOT HOLD FOR A LONG PERIOD OF TIME, ONLY VERIFY MOVEMENT OF ACTUATOR.**

_____ 8.3.4.15 Release the "CABLE CLAMP" switch to the "OFF" position. Verify the amber light in the switch is not lit and in the field verify the crimper does not move.

_____ 8.3.4.16 At the FR control panel turn the "LOWER CABLE CLAMP" switch to the "CRIMP" position and verify the amber light in the switch is lit. In the field verify movement of the crimper. **DO NOT HOLD FOR A LONG PERIOD OF TIME, ONLY VERIFY MOVEMENT OF ACTUATOR.**

_____ 8.3.4.17 Release the "LOWER CABLE CLAMP" switch to the "OFF" position. Verify the amber light in the switch is not lit and in the field verify the crimper does not move.

_____ 8.3.4.18 Turn the "LOWER CABLE CLAMP" switch to the "OPEN" position and verify the amber light in the switch is lit and in the field verify movement of the crimper. **DO NOT HOLD FOR A LONG PERIOD OF TIME, ONLY VERIFY MOVEMENT OF ACTUATOR.**

_____ 8.3.4.19 Release the "LOWER CABLE CLAMP" switch to the "OFF" position. Verify the amber light in the switch is not lit and in the field verify the crimper does not move.

_____ 8.3.4.20 At the FR control panel turn the "BAG CUTTER" switch to the "CLOSE" position. Verify that the "BAG CUTTER CLOSING" amber light is only lit while performing the operation. Verify that the bag cutter blades close.

_____ 8.3.4.21 Turn the "BAG CUTTER" switch to the "OFF" position. Verify that the "BAG CUTTER" amber light is only lit while performing the operation.

_____ 8.3.4.22 Turn the "BAG CUTTER" switch to the "OPEN" position. Verify that the "BAG CUTTER OPENING" amber light is only lit while performing the operation. Verify that the bag cutter blades open.

_____ 8.3.4.23 Turn the "BAG CUTTER" switch to the "OFF" position. Verify that the "BAG CUTTER" amber light is only lit while performing the operation.

_____ 8.3.4.24 At the FR control panel under "SECONDARY CONTROL SYSTEM" turn the "CABLE CUTTER" switch to the "ON" position and then return it to the "OFF" position. Verify the amber

light in the switch is only lit when the switch is in the "ON" position. Verify that the cable cutter functions.

_____ 8.3.4.25 At the FR control panel turn the "CABLE CUTTER UPPER" switch to the "ON" position and then return it to the "OFF" position. Verify amber light in the switch is only lit when the switch is in the "ON" position. Verify that the cable cutter functions.

_____ 8.3.4.26 At the FR control panel turn the "CABLE CUTTER LOWER" switch to the "ON" position and then return it to the "OFF" position. Verify the amber light in the switch is only lit when the switch is in the "ON" position. Verify that the cable cutter functions.

8.3.5 Master Reset

The control system will initialize/clear all sequential flags etc. and return to the beginning of the operational sequence.

_____ 8.3.5.1 Verify the MANUAL CONTROL key switch is in the ON position.

_____ 8.3.5.2 Attach the PLC accessories needed to monitor the status of internal coils 300_{HEX} - 307_{HEX}, 310_{HEX} - 315_{HEX} and 317_{HEX}.

_____ 8.3.5.3 Press the RESET button. Verify this turns off all internal coils (listed above) from on to off and returns the operational sequence to the beginning of the cycle/sequence. Release the RESET button.

_____ 8.3.5.4 Turn the MANUAL CONTROL POWER key switch to the OFF position and remove the key. Remove the PLC accessories.

_____ 8.3.5.5 Turn the following power switches to the OFF position.

- Hydraulic Power Unit
- Start Sequence
- Flexible Receiver System Control Power
- High Pressure Spray System Control Power

9.0 REFERENCES

9.1 DRAWINGS

For the 42": See H-2-79341 "TWRS Drawing Index 42" Tank 101-AZ Waste Retrieval System" for the list of drawings that apply.

For the 4"-6": See H-2-79335 "TWRS Drawing Index 4"-6" Tank 101-AZ

Waste Retrieval System" for the list of drawings that apply.

9.2 VENDOR INFORMATION

- Series One (tm) Junior Programmable Controller Users Manual by GE Fanuc Automation (part number GEK-90503A, March 1987)
- Operating Instructions - Panasonic, VHS, AG-1970P, Video Cassette Recorder
- Appendix E Model 2380-200 Camera Control Unit - COHU

9.3 OTHER INFORMATION

9.3.1 WHC-SD-W151-FDC-001, Rev. 2, "Functional Design Criteria, Project W151, 101-AZ Waste Retrieval System".

9.3.2 WHC-SD-W151-CDR-001, "Conceptual Design Report, Tank 101-AZ Waste Retrieval System, Project W151".

9.3.3 WHC-SD-W151-SDRD-001, "Supplemental Design Requirements Document, 241-AZ-101 Waste Retrieval System".

9.3.4 WHC-SD-W151-CSWD-001, "Design Description for the Flexible Receiver Control System".

9.3.5 WHC-SD-W151-TRP-001, "Interim Development Test Report for Project W151 4/6 Inch Flexible Receiver and Thermocouple Tool".

9.3.6 WHC-SD-W320-FDC-001, Rev 2 "Functional Design Criteria for Tank 241-C-106 Waste Retrieval, Project W-320"

9.3.7 DOE-RL-92-36, "Hanford Site Hoisting and Rigging Manual."

9.3.8 WHC-SD-W151-CSCM-001, Rev 0 "Software Configuration Management Plan for the Flexible Receiver Control System"

9.3.9 WHC-SD-W151-ATR-001, "Project W-151 Flexible Receiver Radiation Detector System Acceptance Test Report".

10.0 DATA SHEETS

10.1 TEST EXCEPTION SHEET

Exception Data Sheets are used to document exceptions to the test procedure and results. A description of the exception and the disposition are provided on the exception sheet. Typical dispositions are:

1. Test approved with exception (i.e., rerun of the acceptance test unnecessary).

2. Acceptance Test Procedure step(s) affected to be repeated after the discrepancy has been corrected.

The following is the Test Exception Sheet that will be used. Additional copies will be made as needed.

TEST EXCEPTIONS

EXCEPTION NO:_____

PROCEDURE STEP NO:_____ DATE:_____

DESCRIPTION:

_____

_____

_____

_____

_____

_____

_____

RESOLUTION:

_____

_____

_____

_____

_____

_____

APPROVALS:

_____ _____

TEST DIRECTOR DATE QUALITY ASSURANCE DATE

_____ _____

DATE DATE

10.2 TEST LOG SHEET

Test Log Sheets will be used to document test start and stop times and to document any notes concerning the execution of the Qualification Test Procedure.

The following is the test log sheet that will be used. Additional copies will be made as needed.

TEST LOG

DATE/TIME	COMMENTS

11.0 4/6" FLEXIBLE RECEIVER SYSTEMS TEST PROCEDURE

This procedure will verify (through physically testing) the 4/6" Flexible Receiver (FR) systems components shall be able to: a) assemble and operate per the drawings and, b) operate in an environmentally safe manner eg no leaks occur that are subjected to fluid mediums. More specifically, it will test the following:

1) Top Assembly from the 42" FR (previously tested) will mate up to the 4/6" FR spool assembly and be able to successfully preform its function of cinching, crimping and cutting.

2) Spray wash assembly will be able to mate to a 4" riser, provide a washing stream, and not have any leaks including at the split ring.

3) Bellows/slider and hydraulic jacks will be abe to position FR such that it can provide a stable sealed system for removing equipment.

4) Equipment can be successfully removed from a tank without causing a rip or tear in the bag.

5) Secondary leak container system will be able to cover the primary bag, cinch, crimp and cut secondary bag cable tight.

11.1 GENERAL SYSTEM REQUIREMENTS

Cables and pipes are all connected per the FR drawings. The system permissive includes electrical verification that the control cable(s) have been installed.

Operator may use a "manual control" key operated switch to by-pass the normal system interlocks and permissive (under the procedural permission of the Test Director or assigned person-in-charge) in order to deal with an unusual situation.

11.1.1 TEST CONDITIONS

The following items shall be performed prior to other steps of this procedure.

Initial/Date

_____ 11.1.2 Install on CTF the 4" riser, 4" split adapter, 4" simulated thermocouple tree, and spray ring per drawing H-2-79328.

_____ 11.1.3 Install 4/6" flexible receiver spool assembly on CTF and verify bellows connects to spray ring. (This step will require the use of the hydraulic jacks. For use of the hydraulic jacks which requires operation of the hydraulic pump in the control trailer, use steps in 8.3 OPERATIONAL

SEQUENCE, 8.3.1 START UP SEQUENCE, to operate pump. Verification for the operation of the bellows will be done at the end of the test. Slider should be not cover bellows but be open when placing spool assembly. Contact COG (Don Legare) for further installation instructions.)

_____ 11.1.4 Install Top Assembly on 4/6" FR spool assembly per H-2-79328.

_____ 11.1.5 Install primary 70 ft.bag and cables on 4/6" FR per drawing H-2-79359.

_____ 11.1.6 Install 4/6" secondary bag and cable on 4/6" leak container bag assembly.

_____ 11.1.7 Verify flexible receiver assembly has been properly attached to the Cold Test Facility and support equipment (secondary bagger, control trailer, and high pressure water pump trailer and water truck (if applicable). Ensure hook swivel is attached to the pump lifting device.

_____ 11.1.8 Power is OFF to components of systems being tested.

- Switch DS1 "MAIN POWER" is off.
- Switch DS2 "HYDRAULIC PWR UNIT" is off.
- Switch DS3 "T1 TRANSFORMER" is off.
- Switch DS4 "HYD POWER UNIT" is off.

_____ 11.1.9 All test instruments have a valid calibration stamp attached.

_____ 11.1.10 Personnel responsible for directing and witnessing the performance of the tests described in this QTP have read and understand the operation of the equipment to be tested.

_____ 11.1.11 All personnel involved in, or witnessing, testing have met the safety requirements listed in section 5.0.

12.0 OPERATIONAL SEQUENCE

The following describes the sequence of events the Flexible Receiver Programmable Logic Controller (PLC) performs in conjunction with the operator(s) actions, and Secondary Bagger equipment. The control logic has 3 major parts: 1) Start up and initial conditions, 2) Operations performed by the Flexible Receiver, and 3) Operations performed by the Secondary Bagger.

The sequence of events are as follows: 1) Start up of equipment; 2) pull equipment out; 3) pull bag tight with cable; 4) clamp cable; 5) cut bag; 6) cut cable; 7) move bagged equipment to secondary bagger; 8) pull secondary bag tight with cable; 9) clamp cable; 10) cut cable.

If power is unexpectedly lost, the system shuts down and stops as is. Upon restoration of power, the "RESET" button is pressed and the system resumes operation at the step it was last performing before loss of power.

12.1 START UP SEQUENCE

WARNING: Turning the HYDRAULIC POWER UNIT key switch, or the START SEQUENCE key switch to OFF, or loss of cable continuity at anytime will de-energize the master system permissive (internal coil 202). The controller will not permit any further actions until corrected.

The following is to be performed on the control panels in the trailer.

********** FLEXIBLE RECEIVER **********

_____ 12.1.1 Section 11.2 has been completed.

_____ 12.1.1.1 Verify all switches located on the Flexible Receiver and High Pressure Spray control panels are in the OFF Position before start of testing.

_____ 12.1.1.2 Turn on Generator/Site Power per manufacturers instructions provided by the Test Director.

_____ 12.1.1.3 Turn Switch DS1 "MAIN POWER" to the "ON" position.

_____ 12.1.1.4 Turn Switch DS3 "T1 TRANSFORMER" to the "ON" position.

_____ 12.1.1.5 Turn Switch DS4 "HYD POWER UNIT" to the "ON" position.

_____ 12.1.1.6 Turn Switch DS2 "HYDRAULIC PWR UNIT" to the "ON" position.

_____ 12.1.1.7 There should be power to the FR control rack which will be denoted by a lit green lamp labeled "POWER OFF" under "SYSTEM CONTROL POWER".

_____ 12.1.1.8 Turn FR control system power ON by rotating "SYSTEM CONTROL POWER" control key to the ON position. A red panel light labeled "POWER ON" under "SYSTEM CONTROL POWER" indicates the power is applied to the Control System when lit.

_____ 12.1.1.9 Push test lamp switch labeled "LAMP TEST" and verify that all lamps are lit. If a lamp does not light, have the bulb replaced. If the lamp still fails to light, contact the COG before preceding. (This applies to ALL lamps on the Flexible Receiver and High Pressure Spray control panels.)

_____12.1.1.10 Verify the green pilot lamp labeled "CONTINUITY GOOD" under "SYSTEM CONTINUITY" is lit and the red pilot lamp labeled "CONTINUITY LOST" is not lit. Do not proceed until this step is verified unless directed by COG Engineer.

_____12.1.1.11 Turn the "START SEQUENCE" key switch to the "ON" position, a green pilot lamp labeled "READY" should be lit.

_____12.1.1.12 Turn the "MANUAL CONTROL KEY" to the on position.

_____12.1.1.13 Push the "RESET" button.

_____12.1.1.14 Turn the "MANUAL CONTROL KEY" to the off position.

_____12.1.1.15 Turn "HYDRAULIC PWR UNIT" switch to the "ON" position, green lamp in the switch is lit and the Hydraulic power unit motor is operating should be operating.

_____12.1.1.16 "SYSTEM HYDRAULIC PRESSURE" panel meter is reading 0 ± 100 (psig).

_____12.1.1.17 Pressure gages on hydraulic pump in trailer, cable cutter, bag cutter, cable tie clamp, winch motors, jacks on the receiver unit, bellows separator (only on the 4"-6" FR), and secondary cable tie clamp and winch motor should read 0 ± 100 psig or has a blank meter screen. Only the meters associated with a function that is currently being used will show a pressure reading. If the meter reads 100 or greater before the starting that sequence, contact COG before proceeding.

_____12.1.1.18 Verify hydraulic connections are not leaking. If piping requires tightening, then turn "HYDRAULIC PWR UNIT" switch to the "OFF" position and resolve leak. Restart system by repeating steps previous steps.

********** CAMERA MONITORING **********

_____ 12.1.1.19 Under monitor #3, flip the "POWER" switches on camera control units 1 through 4 to the "ON" position and verify the green lights labeled "POWER" is lit for each controller. Turn on camera control unit 1 camera lights.

_____ 12.1.1.20 Turn on VCR's 1 through 3 by pressing "POWER" button and ensure the "POWER" light for each is on. Put a tape in each.

_____ 12.1.1.21 Turn on the "SONY" Video monitors by pushing in the "POWER" button and verify that the green light for each is lit.

_____ 12.1.1.22 Turn on the Pan Tilt power.

_____ 12.1.1.23 Select camera's 1, 2 and 4 for monitors 1 through 3 by pushing the appropriate button under each monitor.

_____ 12.1.1.24 Move the switch from the "OFF" position to "VERTICAL" position on the time/date generators 1-3 and put the correct time and date in on each monitor.

_____ 12.1.1.25 Record the testing by pressing the record buttons on the VCRs and adjust cameras to desired viewing. COG will direct what and when should be recorded for testing. Table 2 of section 8 gives additional information on the cameras.

NOTE: ON CAMERAS
Adjustments to picture can be made by adjusting either the camera controls such as the "IRIS" or "WHITE BALANCE" or adjusting the monitor controls. If adjustments to these are not sufficient in giving a clear picture, then contact the Test Director or COG engineer.

Adjustments can be accomplished through use of the manufacture's operating manual.

12.2 Flexible Receiver Sequence

********** COMPONENT REMOVAL SEQUENCE **********

_____ 12.2.1 Turn on vacuum blower motor for the CTF.

_____ 12.2.2 Record the test pit vacuum.
Pit Vacuum: _____

_____ 12.2.3 Record and verify that the wind velocity is 10 mph or less.
Wind Velocity: _____ mph

_____ 12.2.4 Start recording on all three VCR's.

_____ 12.2.5 Reset the crane total height meter to zero and then raise the crane hook at a constant rate provided by the Test Director.

_____ 12.2.6 Observe the bag rings coming off of the stanchions. Verify

there is no binding and that the rings are not separated from the bag.

_____ 12.2.7 Lift the 4" thermocouple tree until the bottom of the shield plug is in view of the internal camera. At this point stop and proceed with starting the High Pressure Spray System.

_____ 12.2.8 Turn main power disconnect switch on the High Pressure Spray System (HPSS) Pump Trailer to "ON". (Remote plug should be connected and the remote switch be positioned to "REMOTE" on the HPSS trailer.)

_____ 12.2.9 Green "SYSTEM POWER OFF" indicator light should be lit on the HPSS Control Panel located in the FR Control Trailer.

_____ 12.2.10 In the Control Trailer, turn "SYSTEM POWER" keyswitch located on the HPSS control panel to the "ON" position. Red "SYSTEM POWER ON" indicator light should be lit and green "SYSTEM POWER OFF" light is not lit.

_____ 12.2.11 Visually inspect that the HPSS control panel meters have power in the FR Control Trailer.

_____ 12.2.12 On the HPSS control panel in the FR Control Trailer, push "LAMP TEST" button and verify all indicator lamps are lit, depress and lamps should go off except for the power. If not, contact COG.

_____ 12.2.13 Verify the green pilot lamp labeled "CONTINUITY GOOD" under "SYSTEM CONTINUITY" is lit and the red pilot lamp labeled "CONTINUITY LOST" is not lit. Do not proceed until this step is verified unless directed by COG Engineer.

_____ 12.2.14 Zero the "FLOW TOTALIZER" meter on the HPSS control panel according to the manufacturers instructions in the FR Control Trailer.

_____ 12.2.15 Zero the "TOTAL FLOW" meter according to the manufacturers instructions on the HPSS Pump Trailer.

_____ 12.2.16 Verify that water in the water truck is at least half full.

_____ 12.2.17 Open the feed water line valve on the water truck.

_____ 12.2.18 Bleed air from lines to portable feed pump.

_____ 12.2.19 Start the portable feed pump located between the HPSS Pump Trailer and the water supply truck according to the manufacturers instructions provided by the test director.

_____ 12.2.20 Pull out the "STOP" button on the HPSS Pump Trailer.

NOTE: Unless otherwise noted, the following steps will be performed at the HPSS Control Panel located in the FR Control Trailer.

_____ 12.2.21 Verify on both local and remote gauges that suction pressure is above 50 psig.

_____ 12.2.22 Put the "PUMP CONTROL MOTOR SPEED" in the 9 o-clock position.

_____ 12.2.23 Push the "PUMP CONTROL PUMP MOTOR START" button. Rotate the "PUMP CONTROL MOTOR SPEED" switch clockwise until a discharge pressure of 3000 +/- 100 psi.

_____ 12.2.24 Verify there are no visible leaks in the HPSS or record location of leaks and/or repair leakage and then record the following. Local readings are taken at the HPSS Pump trailer control panel. Remote readings are taken at the HPSS control panel in the FR Control Trailer. "Total Flow" and "Flow Totalizer" readings are to be taken simultaneously. Verify the "Discharge Temperature" is 150°F +10°F/-30°F and that local/remote readings are consistent.

	LOCAL	REMOTE
Suction Pressure	psi	psi
Discharge Pressure	psi	N/A
Regulator Discharge Pressure	psi	psi
Suction Temperature	°F	N/A
Discharge Temperature	°F	°F
Flow / Flow Indicator	GPM	GPM
Total Flow / Flow Totalizer	Gallons	Gallons
Ammeter	amps	N/A
Frequency Meter	Hz	N/A

_____ 12.2.25 Have crane stop pulling at about 20 ft and lower equipment back down about 8 ft. Lowering the bag 8 ft will simulate rewashing a section of the pump. Raise the bag 8 ft. After raising the bag the bag should not have overlapped on itself. Performing the next step is at the discretion of

the Test Director. Lower the equipment 10 -15 ft. Emergency ring replacing rod may be used if so directed by the COG. If ring is used, then vacuum will have to be shut off.

_____ 12.2.26 Start raising the bag until the closure indexing lines are in-line (Indexing lines are the lines marked on the stanchions and the first horizontal line on the bag). **STOP** raising the bag when the indexing lines are in alignment.

Record the crane hook elevation _____ft.

_____ 12.2.27 On the HPSS control panel in the FR Control Trailer slowly return the "PUMP CONTROL MOTOR SPEED" to the ~ 6 o-clock position reducing the discharge pressure and press the "STOP" button. HPSS should have stopped. If HPSS has not stopped contact COG. Press the stop button on the HPSS trailer.

_____ 12.2.28 Stop the portable feed pump and turn off the feed line valve on the water truck.

_____ 12.2.29 In the Control Trailer, turn "SYSTEM POWER" keyswitch located on the HPSS control panel to the "OFF" position.

********** **BAGGING OPERATION** **********

_____ 12.2.30 On the FR control panel, turn and HOLD the "WINCH MOTORS" switch in the "ON" position for 30 to 45 seconds after the cables have stopped (visually determined by camera) and verify wire rope tightens around the bag forming seals both above and below the cutting blade and the bag tie wraps break without tearing the bag, amber light on switch should be lit. "WINCH MOTORS" "HYDRAULIC PRESSURE" should reach 1250 ± 200 psig on both local and Control Trailer gauges.

_____ 12.2.31 Release the "WINCH MOTORS" switch letting it spring return to the "OFF" position, amber light in the switch should not be lit. "WINCH MOTORS" "HYDRAULIC PRESSURE" should return to 0 ± 100 psig on both local and Control Trailer gauges.

_____ 12.2.32 On the FR control panel in the trailer, turn the "UPPER CABLE CLAMP" switch to "CRIMP" position and hold until pressure on the control panel meter "HYDRAULIC PRESSURE" reaches 3000 ± 300 psig, amber light on switch should be lit.

_____ 12.2.33 Return "UPPER CABLE CLAMP" switch to the "OFF" position and amber light on switch should be not be lit. "UPPER CABLE CLAMP" "HYDRAULIC PRESSURE" should return to 0 ± 100 psig on

both local and Control Trailer gauges.

_____ 12.2.34 Turn the "UPPER CABLE CLAMP" switch to "OPEN" position and hold until pressure reading on the control panel meter "UPPER CABLE CLAMP HYDRAULIC PRESSURE" reaches at least 500 psig on both local and Control Trailer gauges and amber light on switch should be lit.

_____ 12.2.35 Return "UPPER CABLE CLAMP" switch to the "OFF" position and amber light on switch should not be lit. "UPPER CABLE CLAMP" "HYDRAULIC PRESSURE" should return to 0 ± 100 psig on both local and Control Trailer gauges.

_____ 12.2.36 On the FR control panel in the trailer, turn the "LOWER CABLE CLAMP" switch to "CRIMP" position and hold until pressure on the control panel meter "LOWER CABLE CLAMP HYDRAULIC PRESSURE" reaches 3000 ± 300 psig, amber light on switch should be lit.

_____ 12.2.37 Return "LOWER CABLE CLAMP" switch to the "OFF" position and amber light on switch should be not be lit. "LOWER CABLE CLAMP" "HYDRAULIC PRESSURE" should return to 0 ± 100 psig on both local and Control Trailer gauges.

_____ 12.2.38 Turn the "LOWER CABLE CLAMP" switch to "OPEN" position and hold until pressure reading on the control panel meter "LOWER CABLE CLAMP HYDRAULIC PRESSURE" reaches at least 500 psig on both local and Control Trailer gauges and amber light on switch should be lit.

_____ 12.2.39 Return "LOWER CABLE CLAMP" switch to the "OFF" position and amber light on switch should not be lit. "LOWER CABLE CLAMP" "HYDRAULIC PRESSURE" should return to 0 ± 100 psig on both local and Control Trailer gauges.

_____ 12.2.40 On the FR control panel in the trailer, turn the "BAG CUTTER" switch to the "CLOSE" position and hold until pressure on the control panel meter "BAG CUTTER HYDRAULIC PRESSURE" reaches at least 1000 ± 300 psig, then return switch to the "OFF" position. The "BAG CUTTER OPENING" amber light should only be lit while performing operation. Visually verify blades at the FR fully closed and the bag is cut.

_____ 12.2.41 Turn the "BAG CUTTER" switch to the "OPEN" position and hold until pressure on the control panel meter "BAG CUTTER HYDRAULIC PRESSURE" reaches at least 500 psig or until blades fully open, then return switch to the "OFF" position. The "BAG CUTTER/CLOSING" amber light should only be lit while performing operation.

CAUTION: In the following steps do not hold the cable cutter switch in the "ON" position after the cable has been cut, this will damage the cable cutter.

_____ 12.2.42 On the FR control panel in the trailer, turn the "CABLE CUTTER UPPER" switch to the "ON" position and hold until the cable has been cut, then release the switch to spring return to the "OFF" position. Amber light on switch should only be lit when switch is in the "ON" position. Visually verify that upper cable has been fully cut and that the clamp has held. (Field verification may also be used.)

_____ 12.2.43 On the FR control panel, turn the "CABLE CUTTER LOWER" switch to the "ON" position and hold until the cable has been cut, then release the switch to spring return to the "OFF" position. Amber light on switch is should only be lit when switch is in the "ON" position. Visually verify that lower cable has been fully cut and that the clamp has held. (Field verification may be used.)

_____ 12.2.44 Verify the FR bag is fully cut.

_____ 12.2.45 Verify cable is tight around both ends of the bag and has not slipped off.

_____ 12.2.46 Turn off vacuum blower motor for the CTF.

_____ 12.2.47 Record the crane total height meter.
Crane Height: _____ft

12.3 SECONDARY BAGGER OPERATIONS

The sealed end of the primary bag is placed in the Secondary Bag Leak Container. A second bag is applied over the lower portion of the Primary bag to provide a secondary "back-up" barrier. The secondary bag is intended to contain contamination on or between the upper cable seal and the bottom of the primary bag.

_____ 12.3.1 Using the crane move the bagged equipment over to the Secondary bagging station and place primary bag in Secondary bag approximately 2 to 3 feet. Stop so that the cable on the Secondary Containment Assembly is between the rings of the bag.

_____ 12.3.2 At the FR control panel, turn and HOLD the "WINCH MOTORS" switch in the "ON" position for 30 to 45 seconds after the cables have stopped (visually determined by camera) and

verify wire rope tightens around the bag forming seals both above and below the cutting blade and the bag tie wraps break without tearing the bag. Verify amber light on switch is lit. Verify and record "WINCH MOTORS" "HYDRAULIC PRESSURE" reach 1250 ± 200 psig from the control panel meter and local gauge on the receiver.

Control Panel: _____ psig Local Gauge: _____ psig

_____ 12.3.3 Return "WINCH MOTOR" switch to the "OFF" position. Verify amber light in the switch is not lit. Verify and record "WINCH MOTORS HYDRAULIC PRESSURE" reach 0 ± 100 psig from the local gauges on the secondary bagger.

Local Gauge: _____ psig

_____ 12.3.4 At the FR control panel under "SECONDARY CONTROL SYSTEM" in the trailer, turn the "CABLE CLAMP" switch to "CRIMP" position and hold until pressure on the control panel meter "CABLE CLAMP HYDRAULIC PRESSURE" reaches 3000 ± 300 psig. Verify amber light in the switch is lit when holding. Record "CABLE CLAMP HYDRAULIC PRESSURE" from the control panel meter and local gauges on the secondary bagger.

Control Panel: _____ psig Local Gauge: _____ psig

_____ 12.3.5 Return "CABLE CLAMP" switch to the "OFF" position. Verify amber light in the switch is not lit. Verify and record "CABLE CLAMP HYDRAULIC PRESSURE" returned to 0 ± 100 psig from the local gauges on the secondary bagger.

Local Gauge: _____ psig

_____ 12.3.6 Turn the "CABLE CLAMP" switch to "OPEN" position and hold until pressure on the control panel meter "CABLE CLAMP HYDRAULIC PRESSURE" reaches at least 500 psig. Verify amber light in the switch is lit when holding. Record "CABLE CLAMP HYDRAULIC PRESSURE" from the control panel meter and local gauges on the secondary bagger.

Control Panel: _____ psig Local Gauge: _____ psig

_____ 12.3.7 Return "CABLE CLAMP" switch to the "OFF" position. Verify amber light in the switch is not lit. Verify and record "CABLE CLAMP HYDRAULIC PRESSURE" returned to 0 ± 100 psig from the local gauges on the secondary bagger.

Local Gauge: _____ psig

APPENDIX A

42" FR Approved/Performed Test Procedures and Exceptions

QUALIFICATION TEST FOR THE FLEXIBLE RECEIVER

WHC-SD-W320-TIS-001 Rev 2

November 4, 1994

Reference

TABLE OF CONTENTS

PAGE

APPROVAL/SIGNATURE PAGES i

1.0 TEST ITEM IDENTIFICATION 24
1.1 FLEXIBLE RECEIVER 24

2.0 GENERAL DESCRIPTION 29
2.1 TEST OBJECTIVES 29

3.0 TEST CONDITION LIMITS 29
3.1 OPERATIONAL LIMITS 29
3.2 ENVIRONMENTAL LIMITS 30

4.0 FACILITIES, EQUIPMENT, AND MATERIALS 30
4.1 TEST FACILITY 30
4.2 EQUIPMENT 30

5.0 SAFETY 31

6.0 EXCEPTIONS 31

7.0 PERSONNEL REQUIREMENTS 32
7.1 GENERAL 32
7.2 TEST DIRECTOR 32
7.3 WITNESSES 33
7.4 RECORDER 33
7.5 TEST OPERATOR 34

8.0 TEST PROCEDURE 34
8.1 GENERAL SYSTEM REQUIREMENTS 34
8.2 TEST CONDITIONS 35
8.3 OPERATIONAL SEQUENCE 36
8.3.1 Start Up Sequence 36
8.3.2 Flexible Receiver Sequence 39
8.3.3 Secondary Bagger Operations 48
8.3.4 Manual Control 50
8.3.5 Master Reset 53

9.0 REFERENCES 53
9.1 DRAWINGS 53
9.2 VENDOR INFORMATION 54
9.3 OTHER INFORMATION 54

10.0 DATA SHEETS 54
10.1 TEST EXCEPTION SHEET 54
10.2 TEST LOG SHEET 57

Reference

List of Figures

1. Flexible Receiver Systems 26
2. Typical 42" Flexible Receiver Located On A Tank 27
3. Typical 4"-6" Flexible Receiver Located On A Tank 28

PERSONNEL INVOLVED IN THE QUALIFICATION TESTING
OF THE 42" FLEXIBLE RECEIVER

ALL NAMES ON THIS PAGE ARE TO BE PRINTED, SIGNED, AND INITIALED FOR CLARIFICATION.

EXECUTED BY:

DAVE SPARKS DLS.

Dave Sparks WHC 11/7/94
Test Director/Organization Date

DARYL KANDLER DLK.

Daryl Kandler 11-7-94 KEH
Test Operator/Organization Date

KRL
KIANE R. LESSER
Kiane R. Lesser KEH 11/7/94
Recorder/Organization Date

MARK A. MOKLER MAM

Mark Mokler KEH 11/7/94
Test Operator/Organization Date

WITNESSES:

O.N. WEDDLE ONW

O.N. Weddle QA 11-7-94
Witness/Organization Date

JAMES L. HULL (JLH)

James L. Hull (WHC) 11-7-94
Witness/Organization Date

SCOTT BRUNDRIDGE SSB

Scott Brundridge (KEH) 11-7-94
Witness/Organization Date

RICHARD J. FLEMING RJF (KEH)

Richard J. Fleming 11-7-94
Witness/Organization Date

PERSONNEL INVOLVED IN THE QUALIFICATION TESTING
OF THE 4"-6" FLEXIBLE RECEIVER

ALL NAMES ON THIS PAGE ARE TO BE PRINTED, SIGNED, AND INITIALED FOR CLARIFICATION.

EXECUTED BY:

Test Director/Organization	Date	Test Operator/Organization	Date
Recorder/Organization	Date	Test Operator/Organization	Date

WITNESSES:

Witness/Organization	Date	Witness/Organization	Date
Witness/Organization	Date	Witness/Organization	Date

TEST APPROVAL AND ACCEPTANCE OF 42" FLEXIBLE RECEIVER

These signatures approve with exceptions that the 42" Flexible Receiver is qualified for use in the field based on the results from these tests.

Dave Loake 11/7/94
Test Director Date

Dan Legare 11/7/94
Cognizant Engineer Date

O M Sedden 11-7-94
Quality Date

Kari R Lyon 11/7/94
RECORDER Date

Comments:

TEST APPROVAL AND ACCEPTANCE OF 4"-6" FLEXIBLE RECEIVER

These signatures approve with exceptions that the 4"-6" Flexible Receiver is qualified for use in the field based on the results from these tests.

Test Director	Date	Cognizant Engineer	Date
Quality	Date		Date

Comments:

PURPOSE AND SCOPE OF DOCUMENT

This document provides the test plan and procedures to certify and design verify the 42" and 4"-6" Flexible Receiver (FR) as a safety class 3 system. Verification of the design will be handled in two parts. The first part will be to show that it meets design requirements set forth by documents and the second part will perform test(s) to verify its operational aspects.

PART I DESIGN VERIFICATION BASED ON REQUIREMENTS

The following is a table that defines the documents, their requirements, and specifies FR compliance.

Item No.	Document and Requirement	Comply Y or N	Remarks or Comments
1	WHC-CM-6.1 EP 1.4 APPENDIX B Safety class 3 and non-safety class 4 items must meet the requirements of DOE Order 6430.1A for non-safety class facilities and SDC 4.1. Applicable conventional standards shall be applied to safety class 3 items.	Y	This system has met the applicable requirements of DOE 6430.1A. All trailers have been designed to the requirements of SDC 4.1. For the new trailer: Per H-2-78935 rev 2, the trailer is purchased to meet the requirements of SDC 4.1. For the retrofit trailer: This trailer was designed and constructed and reevaluated for SDC 4.1 per WHC-SD-WM-SA-089. For the Flexible Receiver: This has been designed for a 70 MPH (UBC requirement) wind and will withstand it per WHC-SD-W151-DA-003. All other design factors (snow, earthquake, ash) are less severe and are therefore covered by the wind load evaluation. Applicable industrial type standards have been used (as shown in the FDC's for both Project W320 and W151) to meet the requirements for a safety class 3 piece of equipment.

This is a total rewrite, therefore, revision bars were not used.

Item No.	Document and Requirement	Comply Y or N	Remarks or Comments
2	WHC-CM-6.1 EP 2.1 Software is managed in accordance to EP 2.1	Y	There are two types of software used on the flexible receiver. 1) Ladder logic that controls the receiver systems for bagging. This is documented in the "Software Configuration Management Plan For The Flexible Receiver Control System" WHC-SD-W151-CSCM-001, Rev 0. 2) VAX software and program used in the GAMMA ASSAY. This software manipulates and processes information sent from the probes via the nucleonics. Each software will have a table of description to fill out on it.
3	WHC-CM-1-3 MRP 5.46 REV 4 Safety class 3 items shall be incorporated into safety equipment lists individually or by reference to the system including the subject item. A system reference implies that all items in the system are Safety Class 3.	Y	The PSAR (WHC-SD-W151-PSAR-001 Rev 0) for Project W151 views the flexible receiver as a system and classifies it as safety class three. Project W320 also covers this as a system in the Preliminary Safety Evaluation WHC-SD-WM-PSE-010.
4	WHC-CM-1-3 MRP 5.46 REV 4 QA Requirements As a minimum, conventional industrial standards (NEC, NFPA, Mil Stds ...) shall be applied to WHC safety class 3 items.	Y	Same as in item 1.
The following requirements are taken from WHC-SD-W320-FDC-001, Rev. 2. Only the applicable requirements have been listed.			

Item No.	Document and Requirement	Comply Y or N	Remarks or Comments
5	sect 2.2.4 The retrieval system shall be designed to minimize the generation of new liquid waste created as a result of the retrieval operations.	Y	The only waste the system will produce will be in the washing of equipment as it is being pulled out. Hot water will spray out of a ring of nozzles at 50 gpm (max), then it is routed into the tank. The amount of water expected to be used will be 2500 (± 500) gallons for a 50 foot long piece of equipment at an extrusion rate of 1 ft per minute. See FDC WHC-S-037.
6	sect 2.2.4 The retrieval equipment shall be remotely operable from a control room located outside the Tank Farm radiation zone.	Y	This requirement was clarified in Internal Memo 7F820-94-008, *Project 93L-EWW-320, Tank 241-C-106 Sluicing, Letter of Clarification, Equipment Removal System Control Trailer Requirements* to pertain to only the control room for the tank waste sluicing operation. The clarification excludes the Equipment Removal System from this requirement. Since the Flexible Receiver is part of the Equipment Removal System it is not required that its control trailer be located outside the Tank Farm radiation zone. The Flexible Receiver control trailer will be located approximately 100 ft away from the area of equipment operation.
7	sect 2.2.4 Systems operation shall be in accordance with ALARA principles.	Y	This operation will be remotely handled such that few if any person(s) will need to be close to the actual operation. Emergency devices, such as in the event the bag does not get fully cut and it will be necessary to manually cut the bag, will account for minimizing distance by placing tool on an extension rod.

Item No.	Document and Requirement	Comply Y or N	Remarks or Comments
8	sect 2.2.4 Human factors engineering shall be performed in accordance with DOE Order 6430.1A, *General Design Criteria* (DOE 1989), to enhance assembly, operation, maintenance, and disassembly of the retrieval system, and to minimize the potential for operator error.	Y	This feature will only apply to the controls and trailer used to house the controls. The controls were designed to NUREG 0700 per DOE Order 6403.1a guidance. The trailer will also meet this document.
9	sect 2.2.6 All structures and components that are intended for installation and removal via crane shall have their weight permanently and prominently marked on the item and indicated on the definitive design media. All structures and components that are intended for hands-on installation and removal (e.g., pit valve handles, inspection port plugs, etc.) shall have their weight permanently and prominently marked on the item and indicated on the definitive design media.	P	In progress
10	sect 2.2.6 The WRSS shall be designed to comply with all onsite packaging and shipping requirements. The scope of the activity shall include features which facilitate removal and disposal of the waste retrieval equipment.	Y	See PDC WHC-SD-TP-PDC-015 on packaging.

Item No.	Document and Requirement	Comply Y or N	Remarks or Comments
11	sect 3.1 The instrument and control system shall monitor and control the facility retrieval and transfer options, HVAC, and support systems to perform all functions necessary to retrieve the contents of the tank and transport the material to its new holding facility.	Y	Ladder logic coupled with a programmable logic controller, monitor and control the process of pulling an object out of the tank into the bag. These operations are remotely controlled and visually observed by 3 CCTV cameras on the receiver. All controls for the FR are located in a trailer.
12	sect 4.5 Electrical enclosures, junction boxes, and pull boxes shall meet the requirements of the environment in which the housings are installed.	Y	All boxes exposed to the environment will be constructed using NEMA 4 type enclosures. This applies to box(s) on the new trailer (see drawing H-2-78935) and actual hardware from the retrofit grout trailer.
13	sect 4.7 General design guidelines for energy conservation shall comply with the following sections of DOE Order 6430.1A: • 0110-12, "Energy Conservation" • 1595-10, "Energy Management Systems" • 1595-11, "Interior Electrical Power and Lighting Systems" The design must include an energy conservation report in accordance with DOE Order 6430.1A, Section 0110-12.8.	Y	No report will need to be written per section 0110-12.8.1 We will not exceed 500 million BTUs (total energy consumption) per year nor is the trailer(s) greater than 10,000 sq ft. No full blown analysis will be done. An agreement was made not to do a big analysis per telephone conversation and cc mail to Bill White of DOE-RL and WHC Energy Management. The agreement was to write a DSI to file (DSI-94-DJT-001) showing why no further analysis will need to be done on project 151 trailer. There will not be any more analysis done on the trailer taken from grout since its not changing the trailer structure or its support equipment.

Item No.	Document and Requirement	Comply Y or N	Remarks or Comments
14	sect 4.8.2 Provisions for remote replacement of system equipment that operates in a high-radiation zone shall be made as required to meet ALARA criteria (see DOE/EV/1830-T5, *A Guide to Reducing Radiation Exposure to as Low as Reasonably Achievable [ALARA]* [DOE 1980]). The capability shall be provided to perform a preliminary decontamination, where practical, of equipment before repair or removal.	Y	ALARA has been employed when operating the equipment and when placing it too. There are no sources of exposure when placing the receiver equipment with the exception of possible airborne contaminants from opening the riser. Operation of the FR is performed remotely in a trailer away from the equipment being removed (source of radiation). A spray wash system has been incorporated to partially decontaminate the equipment to be removed from the tanks. There is adequate provision for decontaminating the inside of the receiver before removing. The receiver has several access ports which have the potential to be used for decontaminating the internal surfaces of the FR.
15	sect 4.8.2 All mechanical equipment, windows, cameras, television monitors, and other equipment in areas of potential radioactivity shall, where practical, be sealed or otherwise protected from penetration by contamination and decontamination solutions.	Y	All joints, unions, or access ports that are exposed to the removed equipment have seals.
16	sect 4.8.2 All electrical and instrumentation equipment shall be properly grounded for safety of personnel and protection of equipment.	Y	All electrical equipment has been designed per the NEC code. All equipment has been properly grounded. See H-2-98937

Item No.	Document and Requirement	Comply Y or N	Remarks or Comments
17	sect 4.8.3 Materials shall be compatible with the exposed environment. Installed materials shall be (1) resistant to radiation, process solutions, acid and caustic vapors and solutions, and known decontamination agents; (2) nonabsorbent, easily removable if not contamination resistant; and/or (3) oversized to permit partial destruction without affecting structural integrity.	Y	The environmental conditions that receiver equipment material will be exposed to is the following: 1) normal desert weather, 2) hot water, and 3) radiation. All components exposed to the weather are weather proofed. Critical components, such as hydraulic piping have been designed to account for corrosion by being fabricated from stainless steel. The interior of the receiver will see the worst conditions which includes the hot water and radiation. All equipment exposed to these conditions has been designed to endure such an environment. Note that radiation levels may be high, but exposure time is low, which precludes that material that is normally not so conducive to the radiation will still be acceptable. Also, use of the receiver equipment will be limited. See drawing H-2-79310, 79320, 79362 for parts lists.
18	sect 5.1.2 A safety analysis shall be conducted in accordance DOE Order 5480 and 6430.	Y	See WHC-SD-WM-PSE-010 for project W320 and WHC-SD-W151-PSAR-001 for W151.

Item No.	Document and Requirement	Comply Y or N	Remarks or Comments
19	sect 5.1.3 The retrieval system shall be designed to confine contaminants within the combination of boundaries defined by the existing tank, the confinement surfaces of the retrieval system, and any other barriers that may be required. A system shall be employed to control contamination caused by a failure of the primary confiner or other off-normal situation.	Y	The tank ventilation system is a method of contamination control should a failure of the primary confiner (open riser, or failed Flexible Receiver bag) occur. The draft Safety Assessment, WHC-SD-WM-SAD-024, Rev. A (approval expected by 10/94), states that dose consequences due to an open riser condition with a failed tank ventilation system is within the acceptance guidelines of WHC-CM-4-46 for a period of at least 8 hours on tank C-106.
20	sect 5.1.3 The retrieval system shall have provisions for safe and effective decontamination (see Section 5.8). The design of the WRSS shall facilitate decontamination so that the facility can be decommissioned at a future date. Guidance for retrieval equipment design to facilitate eventual decommissioning shall be obtained from DOE Order 4700.1, *Project Management System* (DOE 1987); ANSI N300-1975, *Design Criteria for Decommissioning of Nuclear Fuel Reprocessing Plants* (ANSI 1975); and DOE Order 6430.1A, *General Design Criteria*, Sections 1300-11.2 and 1321-7 (DOE 1989).	Y	The retrieval system will spray down the equipment with 150°F hot water at 3000 psi. All the contaminated water will return to the tank. Everything is sealed both with a vacuum from the tank and joints with waterproof seals. The Flexible Receiver has several access ports which, if needed, provide the ability to decontaminate its internal surfaces.

Item No.	Document and Requirement	Comply Y or N	Remarks or Comments
21	sect 5.1.6 Fire protection systems in temporary facilities provided by this project, e.g., the sluicing control room, shall be designed to meet the following applicable requirements: •DOE/EV-0043, *Standards on Fire Protection for Portable Structures* (DOE 1979)	Y	This section is applicable only to the control trailer but is exempted per Internal Memo 7F520-MEM-94-002, M. E. Manthei to D. E. Legare, "Project W-151, Tank 101-AZ Waste Retrieval System, Fire Suppression for Flexible Receiver Control Trailers," dated February 15, 1994; and, DOE Letter 94-PRJ-045, R. W. Brown, DOE, to President, WHC, "Flexible Receiver Control Trailer, Concurrence for Interpretation of DOE Standard EV-0043, 'Standard on Fire Protection for Portable Structures', August 1979", dated June 3, 1994 (distributed by CCRN #9403731).
22	sect 5.1.6 The fire alarm system shall be compatible with, and tie into, the 200 Area Hanford Site radio fire alarm system.	Y	This section is applicable only to the control trailer but is exempted per Internal Memo 7F520-MEM-94-002, M. E. Manthei to D. E. Legare, "Project W-151, Tank 101-AZ Waste Retrieval System, Fire Suppression for Flexible Receiver Control Trailers," dated February 15, 1994; and, DOE Letter 94-PRJ-045, R. W. Brown, DOE, to President, WHC, "Flexible Receiver Control Trailer, Concurrence for Interpretation of DOE Standard EV-0043, 'Standard on Fire Protection for Portable Structures', August 1979", dated June 3, 1994 (distributed by CCRN #9403731).

Item No.	Document and Requirement	Comply Y or N	Remarks or Comments
23	sect 5.4.1 Components and structures of all systems shall be designed for a DBE as specified in HPS-SDC-4.1, "Design Loads for Structures" (DOE-RL 1988b), and DOE Order 6430.1A, *General Design Criteria* (DOE 1989), for Safety Classes 1, 2, 3, and 4.	Y	For the new trailer: Per H-2-78935, the trailer is purchased to meet the requirements of SDC 4.1. For the retrofit trailer: This trailer was designed and constructed and reevaluated for SDC 4.1 per WHC-SD-WM-SA-089. For the Flexible Receiver: This has been designed for a 70 MPH (UBC requirement) wind and will withstand it per WHC-SD-W151-DA-003. All other factors (snow, earthquake, ash) are not as severe as wind so there was no need to perform calculations.
24	sect 5.4.5 The WRSS shall incorporate features that maintain the WRSS and waste tank in a safe condition if a design basis power failure occurs. Safety and health of the public and onsite personnel shall be key considerations in the design.	Y	An uninterruptible power supply is provided for the Flexible Receiver Control Panels with a generator for backup power. This will maintain equipment in a safe condition and provide power for continuing operation if a design basis power failure occurs.
25	sect 5.5 Design shall consider human factors for maintenance and operations activities, including a control panel, equipment, valve location and orientation, secondary waste handling, and facility arrangement. The design shall comply with DOE Order 6430.1A, Section 1300-12.	Y	This applies only to the controls in the trailer which is being constructed per NUREG 0700. The compliance check list for NUREG 0700 was filled out on the basis of this equipment and for both W151 an W320 trailers. Also, a system task analysis of the operation was performed to analyze operational conditions and tasks. This process will be continually evaluated during the first several operations so that we may improve those things which play a hinderance in the operation.

Item No.	Document and Requirement	Comply Y or N	Remarks or Comments
26	sect 5.8 Modular, separable confinements shall be used for radioactive and other hazardous materials to preclude contamination of fixed portions of the structure.	Y	Most if any contaminants on the flexible receiver will be located within the portion that equipment is removed. Decontamination of this should be feasible since the material is stainless steel. Any seams or joints exposed to the removed equipment will also be a suspect for collection. This equipment (after being once used) will undergo some decontamination but will more than likely be classified as radiated equipment and treated as such throughout its life.
27	sect 5.8 Surfaces should be free of crevices, ledges, and/or protrusions which could collect radioactive material.	Y	Surfaces have been designed to minimize the amount of crevices, ledges, etc.
28	sect 5.8 Penetrations shall be waterproofed for protection during decontamination efforts.	Y	All material exposed to both the weather and the spray wash system will be sealed to prevent any water seepage. The primary and secondary bags contain an absorbent (see H-2-79289) to ensure no dripping occurs.
29	sect 5.8 Fixtures and outlets shall be sealed.	Y	See # 15 remark.
30	sect 5.8 Adequate clearance shall be provided for transfer of equipment.	Y	Work will be taking place outdoors.
31	sect 5.8 Lifting lugs shall be used on large tanks or equipment.	Y	There are several hoisting lifts on various components of the receiver. For example, the bag assembly, the whole receiver assembly, or just the cutter assembly can all be individually lifted up on their own. This applies to both the 42" and the 4"-6" receivers.

Item No.	Document and Requirement	Comply Y or N	Remarks or Comments
32	sect 5.8 Modular radiation shielding shall be used in lieu of, or in addition to, monolithic shielding walls.	N/A	This will be determined by the Radiation Work Permit and is not applicable to the qualification of the receiver.
33	Drawings shall comply to the standards listed in WHC-CM-6-3.	Y	All Flexible Receiver drawings have been drawn to the standards listed in the manual with the exception of the vendor supplied drawings of high pressure pump trailer and the old grout trailer.
The following requirements are taken from WHC-SD-W151-SDRD-001, Supplemental Design Requirements Document, 241-AZ-101 Waste Retrieval System.			
34	3.4.1.1 The Flexible Receiver Assemblies shall be designed to remove new and/or existing profile and sludge thermocouple trees; mixer pumps and new/ existing transfer pumps from the 101-AZ tank.	Y	Drawings H-2-79222 and H-2-79348 provide the Flexible Receiver assemblies that will be used for removing equipment from the 101-AZ tank.
35	3.4.1.2 Waste equipment removed from the 101-AZ tank will be placed into a sealed flexible receiver for containment of radioactive and chemical contamination during removal and transport. The associated removal and mounting equipment shall also be designed to maintain containment of radioactive and chemical contamination while equipment is being removed from the tank. The enclosure shall meet the requirements of Radiological Design, WHC-CM-4-9 and Hanford Radioactive Solid Waste Packaging, storage, and Disposal Requirements, WHC-EP-0063, Rev. 3.	Y	See Item #10

Item No.	Document and Requirement	Comply Y or N	Remarks or Comments
36	3.4.1.3 Fire retardant materials shall be used for the flexible receiver material.	Y	The Flexible Receiver is constructed of stainless steel and a flexible bag which meets the fire protection requirements of MIL-C-43006 Type I.
37	3.4.1.4 The receiver shall, as a goal, have a leak rate of less than 0.3 volume percent per hour, for a 12-hour period, at an initial negative pressure differential of 4 inches of water. After bagging is completed, the solid waste article shall be placed into a trough or similar container to prevent any leakage of waste to the surrounding soil. The bag is only intended for contamination control during removal.	Y	The Flexible Receiver containment is provided by impervious stainless steel and receiver bags which are leak tested to more stringent criteria per H-2-79326.
38	3.4.1.5 Equipment will be installed and removed using a crane.	Y	To be demonstrated in Qualification Testing.
39	3.4.1.6 Removal equipment will require remote operation from a distance to minimize radiation exposure to personnel. ALARA principles shall be used at all times in the design of the equipment.	Y	Equipment operation is performed from inside the control trailer at a remote location.
40	3.4.1.7 Design of the flexible receiver shall allow recovery action for failed in-tank riser components in high radiation areas which may include remote reinsertion of components.	Y	To be demonstrated in Qualification Testing.

Item No.	Document and Requirement	Comply Y or N	Remarks or Comments
41	3.4.1.8 Removal equipment must be operable in ambient conditions from 35°F to 120°F. Equipment will not be used during high wind, rain or freezing conditions.	Y	Equipment has been designed for these conditions.
42	3.4.1.9 The Flexible Receiver Assembly will interface with the wash assembly (section 3.4.3) on the riser.	Y	To be demonstrated in Qualification Testing.
43	3.4.1.10 The lifting mechanism hook speed shall have a range of 1-8 fpm. Speed control shall be obtained by modifying the hydraulics of an existing crane. The new speed control system shall not eliminate or reduce existing crane capabilities.	Y	This requirement is provided by the "Specification for Modification to Grove Crane at 1100" V-W151-0003.
44	3.4.1.11 Hook speed, position indicator, and hook load with associated readout (located in crane cab) shall be provided for the existing site crane. The equipment mounted on the crane shall be weatherproof.	Y	This requirement is provided by the "Specification for Modification to Grove Crane at 1100" V-W151-0003.
45	3.4.1.12 Total weight of the new components (to be lifted as a unit) and the rigging shall be within the capacity of existing site cranes.	Y	

Item No.	Document and Requirement	Comply Y or N	Remarks or Comments
46	3.4.1.13 A secondary receiver bag assembly will be secured around the bottom of the primary flexible receiver to contain residual contamination between the bottom of the primary receiver bag and the cable seal. An absorbent material will be placed in the bag to absorb any liquid that may be present.	Y	Provided by the Flexible Receiver Leak Containment Bag/Stand Assemblies, H-2-79297 and H-2-79362. Their function will be demonstrated in Qualification Testing.
	Spray Wash System, High Pressure Pump		
47	3.4.2.1 Hot water shall be furnished on site from the 200 Area boiler plant. The 200°F maximum water will be tanker trucked to 101-AZ.	Y	To be demonstrated in Qualification Testing.
48	3.4.2.2 The high pressure spray wash system supply shall have an operating discharge pressure of 3000 psi and will be designed and fabricated per ASME B31.1, as applicable.	Y	This requirement is provided by "Procurement Specification for High Pressure Hot Water System", WHC-S-037 and documented in CVI file 22515.
49	3.4.2.3 The portable high pressure spray wash system shall be totally enclosed and/or weather proof to the extent possible, except for the areas open for venting and connectors.	Y	This requirement is provided by "Procurement Specification for High Pressure Hot Water System", WHC-S-037 and documented in CVI file 22515.
50	3.4.2.4 The spray wash system shall have a relief valve, unloader or vent system such that there is no possibility of over pressurization of the system.	Y	This requirement is provided by "Procurement Specification for High Pressure Hot Water System", WHC-S-037 and documented in CVI file 22515.

Item No.	Document and Requirement	Comply Y or N	Remarks or Comments
51	3.4.2.5 The spray wash system piping shall be insulated with a moisture resistant material.	Y	Spray wash system piping is not insulated and does not need to be. Adequate guards are in place to protect personnel from high temperature piping. This requirement will be revised to reflect the accepted condition of the piping prior to its field use for either project W-151 or W-320.
52	3.4.2.6 All piping or hoses associated with the hot water supply shall also have sufficient protection for the safety of operating personnel.	Y	This requirement is provided by "Procurement Specification for High Pressure Hot Water System", WHC-S-037 and documented in CVI file 22515. Flexible hoses will also be administrativlely controlled to protect personnel.
53	3.4.2.7 The system shall be mounted on a highway rated Department of Transportation approved trailer. The trailer shall be suitable for travel over loose gravel.	Y	This requirement is provided by "Procurement Specification for High Pressure Hot Water System", WHC-S-037 and documented in CVI file 22515.
54	3.4.2.8 A replaceable or flushable filter shall be provided for the water supply with a capacity of up to 50 gpm to prevent plugging of the washer spray nozzles.	Y	Inlet water filter is provided. See CVI file 22515.
55	3.4.2.9 The design shall include a flexible discharge supply hose capable of safely handling the 300 psi hot water being pumped to the high pressure spray header over a distance of 200 feet.	Y	This requirement is provided by "Procurement Specification for High Pressure Hot Water System", WHC-S-037 and documented in CVI file 22515.

Item No.	Document and Requirement	Comply Y or N	Remarks or Comments
56	3.4.2.10 Necessary valving, piping, remote controls and other instrumentation shall be supplied as required. The high pressure spray system will be operated by either a gasoline/diesel motor or electric motor and come complete with remote controls and all necessary safety features.	Y	This requirement is provided by "Procurement Specification for High Pressure Hot Water System", WHC-S-037 and documented in CVI file 22515.
57	3.4.2.11 The spray system shall be capable of delivering between 20 and 50 gpm at 3000 psig, suitable for both the 4/6" and the 42" spray ring assemblies.	Y	This requirement is documented in the CVI file 22515.
	Decontamination Wash Assemblies		
58	3.4.3.1 Hardware removed from tank 101-AZ will have supernate/sludge washed from the external and internal surfaces during the equipment removal process using the spray wash system.	Y	The washing hardware is depicted on drawing H-2-79256 "TWRS 101-AZ Washer Assembly".
59	3.4.3.2 Wash equipment should be designed for cleaning hardware, with complete circumference coverage, at a nominal vertical removal rate of one foot per minute.	Y	The washing hardware is depicted on drawing H-2-79256 "TWRS 101-AZ Washer Assembly".

Item No.	Document and Requirement	Comply Y or N	Remarks or Comments
60	3.4.3.3 Nozzles with a flat spray configuration and an operating pressure of 3000 psi shall be used in the washer assembly. Nozzles shall be orientated such that both top and bottom sides of protrusions on the removed components exterior are thoroughly rinsed, in addition to the vertical surfaces.	Y	The washing hardware is depicted on drawing H-2-79256 "TWRS 101-AZ Washer Assembly".
61	3.4.3.4 The 4/6" spray ring shall be sized for 20-25 gpm flow rate at 3000 psig. The 42" spray ring shall be sized for 40-50 gpm flow rate at 3000 psig.	Y	The washing hardware is depicted on drawing H-2-79256 "TWRS 101-AZ Washer Assembly".

Item No.	Document and Requirement	Comply Y or N	Remarks or Comments
62	3.4.5.1 Trailer a. Provide environmentally controlled trailer housing instrumentation, electrical & control equipment, operators, monitors, VCRs, displays and recording equipment. Trailer shall house Instrumentation and Control (I&C) equipment for the flexible receiver, washer, and radiation monitoring.	Y	The Flexible Receiver Control Trailer is depicted on drawing H-2-78935, "W151 - TWRS Trailer Assembly".
	b. All suitable I&C equipment shall be installed in 19 inch racks to the extent possible.	Y	
	c. All cables and wiring inside of the trailer shall conform to the requirements NFPA-70.	Y	
	d. Trailer shall have smoke detection with audible alarm.	Y	See Item No. 21
	e. Maximum power to the trailer shall be limited to 440 VAC, 3 phase.	Y	
	f. Trailer shall have personnel exits at opposite ends of the trailer which open from the inside. Rear cargo doors do not count as exits.	Y	

Item No.	Document and Requirement	Comply Y or N	Remarks or Comments
	g. Environmental controls shall consist of the following:	Y	
	1. Cooling capacity to achieve and maintain a 70°F condition with an outside ambient temperature of 115°F, full solar insulation, and heat loads from the I&C equipment.	Y	
	2. Heating capacity to achieve and maintain a 70°F with an ambient temperature of 10°F.	Y	
	3. Controls shall be designed for local operator control and be user friendly. Ergonomics shall be used in the lay-out of controls and consoles.	Y	
	4. Heating/cooling unit can be one combination unit.	Y	
	5. Unit shall incorporate an integral fan for air circulation, and provide for outside air exchanges.	Y	
	6. The system shall also be designed based on other ambient conditions specified in Standard Design Criteria (SDC) 5.1.	Y	

Item No.	Document and Requirement	Comply Y or N	Remarks or Comments
63	3.4.5.2 Flexible Receiver Control Console (FRCC)		To be demonstrated in Qualification Testing.
	a. The FRCC shall control the operation of the Flexible Receiver, including the thermocouple liquid removal tool, in a manually actuated sequence (controller forces operator to a fixed sequence) with manual emergency override controls available to secure the operation in a safe configuration.	Y	
	b. The sequence, interlocks and indicating lights shall be provided for equipment operation.	Y	
	c. FRCC shall be located in the trailer described in 3.4.5.1.	Y	
	d. Parameters shall be displayed in engineering units.	Y	
	e. Three CCTV monitors and cameras shall be provided to monitor field operations.	Y	
	f. Operators shall be able to, through a front panel select or on a multiplexer, view any camera on any monitor.	Y	

Item No.	Document and Requirement	Comply Y or N	Remarks or Comments
	g. The camera used to view the retrieved material in the gamma assay region shall include superimposed height and/or time indication on screen for correlation with gamma energy analysis results. The gamma assay system will store data by time stamp as part of its operation. The subject camera data will be actively recorded.	Y	
64	3.4.5.3 Wash Assembly Control Console (WACC)		To be demonstrated in Qualification Testing.
	a. The WACC shall control the operation of the spray wash system in a manually actuated sequence.	Y	
	b. The sequence, interlocks and indicating lights shall be provided on the control panel for the system operator. (May be shared with FRCC.)	Y	
	c. WACC is located in the trailer (3.4.5.1).	Y	
	d. Parameters shall be displayed in engineering units.	Y	
	e. Controls and instrumentation shall be included in the console operating panel. (See Figure 10 for spray system configuration.)	Y	

Item No.	Document and Requirement	Comply Y or N	Remarks or Comments
65	3.4.5.4 Radiation Monitoring Control Console Radiation monitoring controls (computer data acquisition) and readout shall be installed in 19" racks (to the extent practical) with other control equipment in the AZ tank farm control room.	Y	See drawing H-2-78931 "TWRS Control Console".
66	3.4.5.5 Electrical System a. The electrical system in the trailer shall convert the supplied 440 VAC, 3 phase as necessary for use by the instrumentation, electrical & control equipment, monitors, displays and recording equipment, lighting and environmental equipment. b. The installation shall be per the latest edition of the National Electric Code (NFPA 70).	Y Y	The Flexible Receiver Control Trailer is depicted on Drawing H-2-78935, "W151 - TWRS Trailer Assembly".

PART II - DESIGN VERIFICATION BY OPERATIONAL TESTING

1.0 TEST ITEM IDENTIFICATION

The Flexible Receiver (FR) is a remotely operated device to remove equipment contaminated with radioactive and hazardous waste from buried tanks or below-ground installations with minimal exposure to the operating personnel and no release of contamination to the environment. This equipment will be attached to a pipe flange or plate at the top of the proposed removed equipment. The Flexible Receiver will wash the equipment off as it is being removed, check for the amount of radiation on the equipment, insert the equipment in a fabricated bag, and seal the equipment in this bag for disposal or storage.

All of the controls of the equipment are located in a trailer with interlocks on each of the control switches so that accidental operation of equipment can't happen without the prior proper sequence of operations being performed.

Figure 1 shows a breakdown of the equipment by systems. There are two types of receivers; one that can remove equipment from a 42" diameter riser (see Figure 2) and this is referred to as the 42", and the second one can remove equipment from 4" and 6" diameter risers (see Figure 3) and is referred to as the 4"-6" Flexible Receiver. The Flexible Receiver systems are described on drawings H-2-79336 for the 4"-6" Flexible Receiver and H-2-79342 for the 42" Flexible Receiver.

NOTE: The GAMMA ASSAY SYSTEM will not be tested by this document but has been tested per WHC-SD-W151-ATP-001.

1.1 FLEXIBLE RECEIVER SYSTEMS

FLEXIBLE RECEIVER BAG AND CARTRIDGE ASSY	- Frame and special bag that equipment is pulled up and into.
FLEXIBLE RECEIVER TOP ASSY	- Assembly that closes the bottom of the bag, cinches the wire rope cables, cuts the cables and cuts the bag between the sealed sections of the bag.
CCTV CAMERAS	- Used to remotely view operation
GAMMA ASSAY SYSTEM AND SPOOL ASSY	- Monitors radiation of equipment being pulled out, provides access to the inside of the spool assembly and is the mounting for internal cameras.

SPRAY WASH	- Sprays down equipment being extracted.
SECONDARY BAG ASSY	- Acts as secondary bag over the end of the primary bag that was cut.

Figure 1. Flexible Receiver Systems

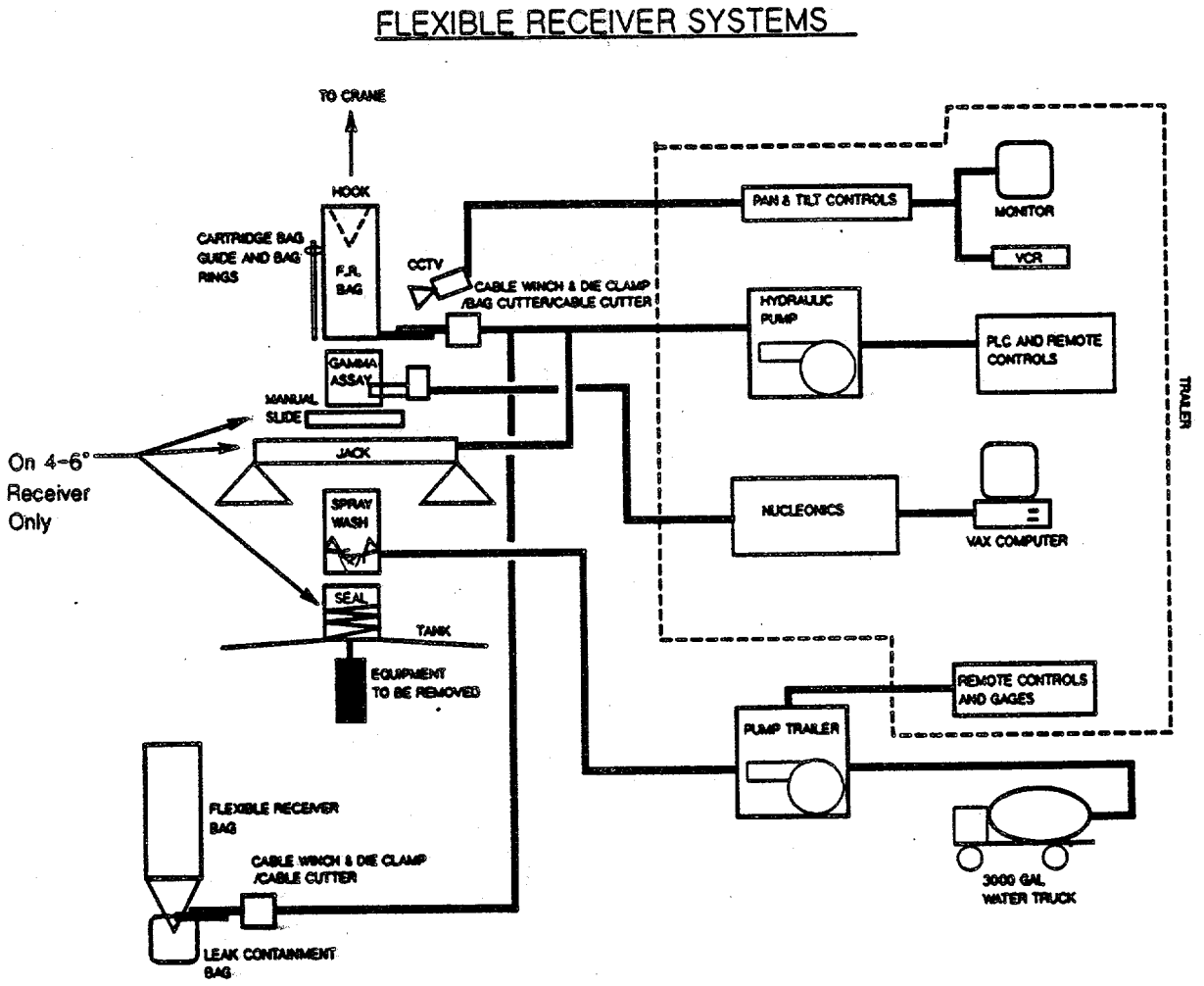

Figure 2. Typical 42" Flexible Receiver Located On A Tank

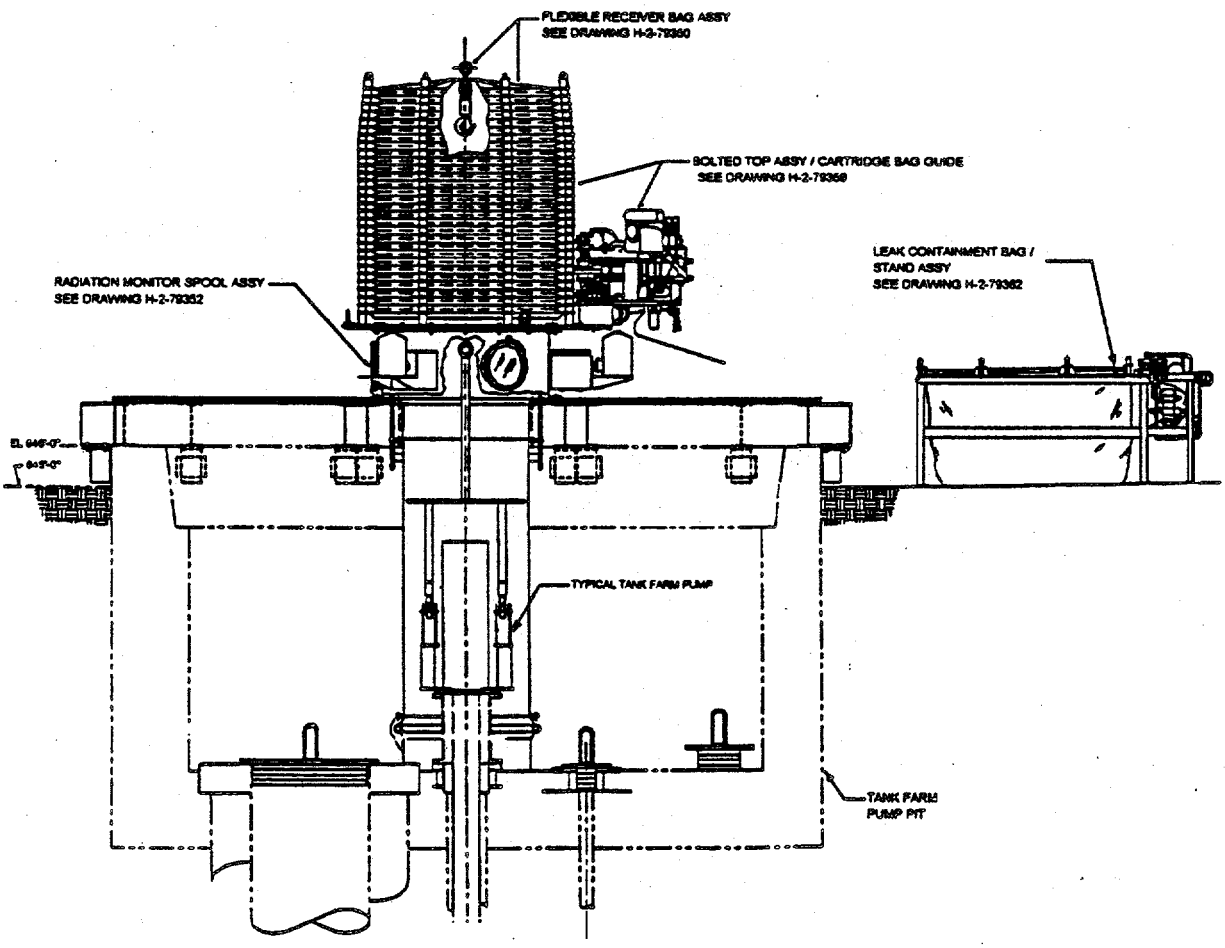

Figure 3. Typical 4"-6" Flexible Receiver Located On A Tank

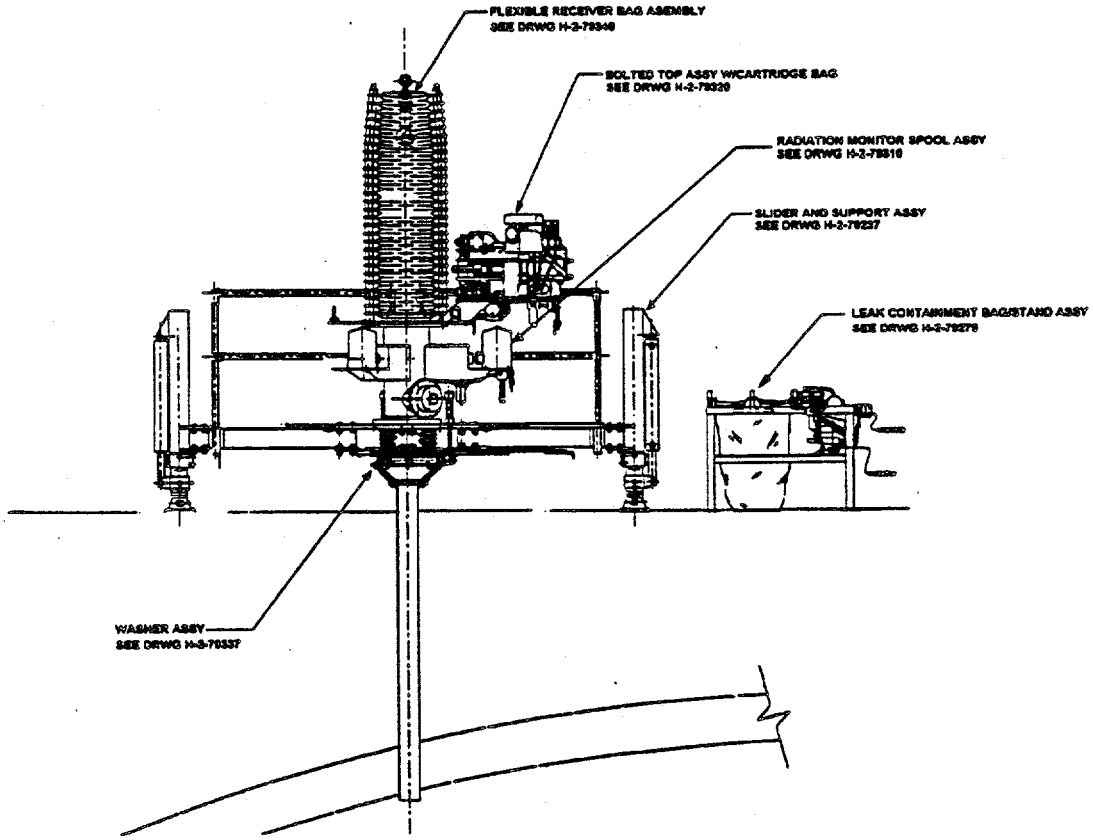

2.0 GENERAL DESCRIPTION

2.1 TEST OBJECTIVES

The objective of this test is to qualify the design of the 42" and 4"-6" Flexible Receiver systems for field use by demonstrating environmentally safe removal of a Tank Farm pump mock-up from a Tank Farm riser mock-up. Testing will also demonstrate the performance of supporting equipment.

The Flexible Receiver and the Secondary Bagging equipment shall be tested to verify successful operation of the equipment to the following criteria:

a. The Flexible Receiver can be placed on a riser and connections made to the supporting equipment.

b. The Flexible Receiver bag can accept equipment and be successfully sealed.

c. The Secondary Bagging System encases the seal of the primary Flexible Receiver bag.

d. The flexible bag(s) do not tear and maintain integrity during the entire test.

e. The FR control system operates in the fail safe forced sequence mode.

f. The FR control system will operate in the manual override mode (out of sequence operations).

g. The CCTV Video system monitors and records the removal of the test item.

h. The spray wash system operates without leaks and effectively provides coverage (4"-6" only).

i. The item being removed can be reinserted to a depth of 8 feet and the bag reinstalled onto the vertical bag supports.

j. The system prohibits momentary mechanical fluctuations due to the application of system power, including power interruptions.

3.0 TEST CONDITION LIMITS

3.1 OPERATIONAL LIMITS

No unique or unusual industrial, radiological, chemical, or critical safety hazards are involved with performance of this test.

Testing will be stopped due to any safety concern, equipment failure, or at the discretion of the Test Director. Resumption of testing will continue when the concerns have been addressed and/or repairs have been completed to the satisfaction of the Test Director.

3.2 ENVIRONMENTAL LIMITS

The crane pulling operation beginning with step 8.3.2.11 shall NOT begin if the wind velocity exceeds 10 MPH. If the pulling operation has begun and the weather changes for the worse, testing shall be stopped and the test equipment secured so that no damage will be incurred.

4.0 FACILITIES, EQUIPMENT, AND MATERIALS

4.1 TEST FACILITY

Testing will be performed at the Cold Test Facility, located west of Route 4 on Route 11A between the 200 East and 200 West Areas. The Cold Test Facility consists of a 10'-0" inside square vault, 11'-0" deep. Extending below the bottom of the vault floor is a 6'-0" diameter caisson 53'-0" deep.

As an option portions of this test may be performed at the Equipment Testing Laboratory (305 Bldg), or other suitable facility.

4.2 EQUIPMENT

- The on-site modified 110 Ton "GROVE" crane or equal.
- A vacuum system that will simulate the negative pressure within the waste tank. Vacuum pressure is equal to or greater then 0.25 inches of water but will not exceed 2 inches of water during operation.
- Electrical power for the Flexible Receiver control trailer and pump truck 480V 3PH 60HZ and 200 Amps for control trailer and 200 Amps for the HPS pump trailer.
- 3000 gallon water truck filled with water to 150-175°F
- The high pressure spray trailer
- The 42" or 4"-6" Flexible Receiver
- The 42" or 4"-6" Secondary Bagger
- A 70 foot long Flexible Receiver bag for the 42" or 4"-6" FR
- A 42" secondary bag for the 42" or 4"-6" FR
- A simulated process pump and thermocouple

- Control trailer with hydraulic pump, control racks, video systems, etc
- Emergency pole for placing rings on FR poles when lowering the receiver bag.
- Stop watch
- Spare components, such as test bags, cabling, and cable sleeves that will be expended during testing.
- Safety equipment: hard hat, leather gloves, safety glasses, steel toed shoes
- Replacement bulbs for control panel lights.
- 3 VHS tapes (minimum)
- PLC accessories

5.0 SAFETY

NOTE: THE INFORMATION IN THIS SECTION SHALL BE TOLD TO ALL PERSONNEL IN OR AROUND THE TEST AREA BEFORE TESTING BEGINS. SAFETY IS THE RESPONSIBILITY OF ALL INDIVIDUALS. ALL CONCERNS SHOULD BE DIRECTED TO THE TEST DIRECTOR OR APPOINTEE.

Hazards associated with the job are found in the Preliminary Safety Evaluation (WHC-SD-WM-PSE-010) with the exception of the radiological hazards which will not apply to this test. Potential hazards are: over head objects (crane), tripping (wires and hoses on the ground), pinch points, and exposed 3000 psig high pressure 150°F hot water and hydraulic lines. All personnel within the crane operating zone will wear safety glasses, a hard hat, and steel toed shoes. Individuals working on or near the high pressure pump trailer/or its hoses are advised to wear hearing protection, a hard hat, safety glasses, and leather gloves when operating.

The test area will be kept free from nonessential personnel as directed by the Test Director. Individuals shall perform their assigned tasks in a safe manner so as to protect themselves and others from hazards and prevent damage to the property and the environment. The Test Director shall assure the safety of activities within their areas to prevent injury, property damage, or interruption of operation.

Crane operations shall be in accordance with the "Hanford Site Hoisting and Rigging Manual", (DOE-RL-92-36).

6.0 EXCEPTIONS

Exceptions to the test results will be sequentially numbered, recorded, and approved on individual Exception forms. If changes to the procedure are required during testing those changes will also be documented on an Exception Form. All exception forms will have written approval by the Test Director and Quality Assurance prior to the conclusion of testing. Whenever possible, exceptions will be approved at the time they are prepared. If required personnel are not available for approval at the time the exception is prepared then testing will be allowed to continue. Exception approval to continue testing may be written, verbal, or per telecon.

7.0 PERSONNEL REQUIREMENTS

7.1 GENERAL

Each organization participating in this test will designate personnel to assume the responsibilities and duties as defined herein for their respective roles. The designated personnel shall become familiar with this procedure and systems involved to the extent that they can perform their assigned duties.

7.2 TEST DIRECTOR

- Coordinates and directs testing.
- Acts as liaison between the participants in testing.
- Distributes the testing schedule within one week before start of testing.
- Schedules and conducts a pretest meeting with test participants before start of testing when necessary.
- Notifies the persons performing and witnessing the test 2 days before the start of testing.
- Schedules an informal test (dry run) when necessary.
- Notifies concerned parties when a change is made in the testing schedule.
- Takes necessary steps to clear exceptions to the test.
- Confirms that inspection of the system to be tested has been completed.
- Stops any test which, in the judgement of the director, may cause damage to the system or result in an Unsafe Condition.
- After verifying there is no adverse impact, may alter the sequence in which system or subsystems are tested, but not the sequence of

steps in each test.

- Ensures that environmental conditions are maintained.
- If a test is to be suspended for a period of time, ensures that the system is left in a safe mode.
- Before restarting a suspended test, reverifies the test prerequisites.
- Reviews recorded data, discrepancies, and exceptions.
- Obtains information or changes necessary to clear or resolve objections during the performance of the test.
- Signs Exception Test and Approval page when test has been performed.
- Signs Exception form when exception has been resolved.
- Obtains required approval signatures for the final test report.
- Makes sure exceptions are incorporated into this document via ECN at completion of job.

7.3 WITNESSES

(Provided by Participating Organizations)
Observers, user representatives, and witnesses shall be notified 2 days prior to testing.

- Witness the tests and provide input while considering operation under actual tank farm conditions.
- Review results of testing.
- Assist the Test Director when required.
- Sign Execution and Test Approval page when test has been performed.
- Sign Exception form when exception has been resolved.

7.4 RECORDER

- Records names of all designated personnel prior to the start of testing.
- Records test instrument identification numbers and calibration expiration dates.

- Observes tests and records test data.
- Signs Execution and Test Approval page.
- Initials and dates test steps as they are completed. On data sheets where there is not room for both the initial and date, the data may be added at the bottom of the column.
- Records exceptions on the Exception form.
- Signs Exception form when exception has been resolved.
- Notifies the Test Director at the time an objection is made.
- After the test is completed, assigns alpha numeric page numbers to added data sheets and Exception forms. Records page numbers in the Table of Contents.

7.5 TEST OPERATOR

- Performs test under direction of the Test Director.
- Provides labor, equipment, and test instruments required for performing tests.
- Confirms that all equipment required for performing test will be available at the start of testing.
- Signs the Execution and Test Approval page.

7.6 QUALITY ASSURANCE WITNESS

- Witnesses test steps are performed.
- Signs and approves test and exceptions.

7.7 COG ENGINEER

- Main Technical consultant on equipment

8.0 TEST PROCEDURE

NOTE: This procedure applies to the 42" flexible receiver only. The procedure for testing the 4"-6" flexible receiver will be added in later (TBD5).

8.1 GENERAL SYSTEM REQUIREMENTS

Cables and pipes are all connected per the FR drawings. The system

permissive includes electrical verification that the control cable(s) have been installed.

A manual operation (i.e. operator actuate a switch) is required prior to starting or continuing operation after power is applied to the controller.

Operator must manually push, twist, or turn button(s) to control the sequence for the FR assembly and Secondary Bagger equipment. The control sequence for the Flexible Receiver assembly and Secondary Bagger equipment is implemented by a manually actuated, forced sequence of events; i.e. the operator manually pushes the button for the next step in the sequence while the controller ignores any input from the operator that is out of sequence.

Operator may use a "manual control" key operated switch to by-pass the normal system interlocks and permissive (under the procedural permission of the Test Director or assigned person-in-charge) in order to deal with an unusual situation.

8.2 TEST CONDITIONS

The following items shall be performed prior to other steps of this procedure.

Initial/Date		
KRL 11/7/94	8.2.1	Install 42" flexible receiver on CTF.
KRL 11/7/94	8.2.2	Install primary 70 ft bag and cables on 42" FR per drawing H-2-79359.
KRL 11/7/94	8.2.3	Install secondary bag and cable on leak container bag assembly.
KRL 11/7/94	8.2.4	Flexible receiver assembly has been properly attached to the Cold Test Facility per H-2-79218 and/or H-2-79219 and/or H-2-79220 and/or H-2-79221 and support equipment (secondary bagger, control trailer, and high pressure water pump trailer and water truck (if applicable). Ensure hook swivel is attached to the pump lifting device. Note attachment of FR may require the use of the hydraulic jacks (ONLY on 4"-6" FR) which would require operation of the hydraulic pump in the control trailer (Use steps in 8.3 OPERATIONAL SEQUENCE, 8.3.1 START UP SEQUENCE, to operate pump).
KRL 11/7/94	8.2.5	All systems being tested have their hoses, piping, and electrical instrumentation and power properly connected per FR drawings.
KRL 11/7/94	8.2.6	Power is OFF to components of systems being tested.

- Switch DS1 "MAIN POWER" is off.
- Switch DS2 "HYDRAULIC PWR UNIT" is off.
- Switch DS3 "T1 TRANSFORMER" is off.
- Switch DS4 "HYD POWER UNIT" is off.

KRL 11/7/94 8.2.7 All test instruments have a valid calibration stamp attached.

KRL 11/7/94 8.2.8 Personnel responsible for directing and witnessing the performance of the tests described in this QTP have read and understand the operation of the equipment to be tested.

KRL 11/7/94 8.2.9 All personnel involved in, or witnessing, testing have met the safety requirements listed in section 5.0.

8.3 OPERATIONAL SEQUENCE

The following describes the sequence of events the Flexible Receiver Programmable Logic Controller (PLC) performs in conjunction with the operator(s) actions, and Secondary Bagger equipment. The control logic has 3 major parts: 1) Start up and initial conditions, 2) Operations performed by the Flexible Receiver, and 3) Operations performed by the Secondary Bagger.

The sequence of events are as follows: 1) Start up of equipment; 2) pull equipment out; 3) pull bag tight with cable; 4) clamp cable; 5) cut bag; 6) cut cable; 7) move bagged equipment to secondary bagger; 8) pull secondary bag tight with cable; 9) clamp cable; 10) cut cable.

If power is unexpectedly lost, the system shuts down and stops as is. Upon restoration of power, the "RESET" button is pressed and the system resumes operation at the step it was last performing before loss of power. This will be tested during the bagging operation.

8.3.1 Start Up Sequence

WARNING: Turning the HYDRAULIC POWER UNIT key switch, or the START SEQUENCE key switch to OFF, or loss of cable continuity at anytime will de-energize the master system permissive (internal coil 202). The controller will not permit any further actions until corrected.

The following is to be performed on the control panels in the trailer.

********** FLEXIBLE RECEIVER **********

KRL 11/7/94 8.3.1.1 Section 8.2 has been completed.

KRL 11/7/94 8.3.1.2 Verify all switches located on the Flexible Receiver and High Pressure Spray control panels are in the OFF

Position before start of testing.

KRL 11/7/94 8.3.1.3 Turn on Generator/Site Power per manufacturers instructions provided by the Test Director.

KRL 11/7/94 8.3.1.4 Turn Switch DS1 "MAIN POWER" to the "ON" position.

KRL 11/7/94 8.3.1.5 Turn Switch DS2 "HYDRAULIC PWR UNIT" to the "ON" position.

KRL 11/7/94 8.3.1.6 Turn Switch DS3 "T1 TRANSFORMER" to the "ON" position.

KRL 11/7/94 8.3.1.7 Turn Switch DS4 "HYD POWER UNIT" to the "ON" position.

KRL 11/7/94 8.3.1.8 Verify there is power to the FR control rack. This is denoted by a lit green lamp labeled "POWER OFF" under "SYSTEM CONTROL POWER".

KRL 11/7/94 8.3.1.9 Turn FR control system power ON by rotating "SYSTEM CONTROL POWER" control key to the ON position. A red panel light labeled "POWER ON" under "SYSTEM CONTROL POWER" indicates the power is applied to the Control System when lit.

KRL 11/7/94 8.3.1.10 Push test lamp switch labeled "LAMP TEST" and verify that all lamps are lit. If a lamp does not light, have the bulb replaced. If the lamp still fails to light, contact the COG before preceding. (This applies to ALL lamps on the Flexible Receiver and High Pressure Spray control panels.)

KRL 11/7/94 8.3.1.11 Verify the green pilot lamp labeled "CONTINUITY GOOD" under "SYSTEM CONTINUITY" is lit and the red pilot lamp labeled "CONTINUITY LOST" is not lit. Do not proceed until this step is verified unless directed by COG Engineer.

KRL 11/7/94 8.3.1.12 Turn the "START SEQUENCE" key switch to the "ON" position and verify the green pilot lamp labeled "READY" is lit.

KRL 11/7/94 8.3.1.13 Turn the "MANUAL CONTROL KEY" to the on position.

KRL 11/7/94 8.3.1.14 Push the "RESET" button.

KRL 11/7/94 8.3.1.15 Turn the "MANUAL CONTROL KEY" to the off position.

KRL 11/7/94 8.3.1.16 Turn "HYDRAULIC PWR UNIT" switch to the "ON" position and verify green lamp in the switch is lit and the Hydraulic power unit motor is operating by visual inspection.

KRL 11/7/94 8.3.1.17 Verify "SYSTEM HYDRAULIC PRESSURE" panel meter is reading 0 ± 100 (psig).

KRL 11/7/94 8.3.1.18 Verify pressure gages on hydraulic pump in trailer, cable cutter, bag cutter, cable tie clamp, winch motors, jacks on the receiver unit, bellows separator (only on the 4"-6" FR), and secondary cable tie clamp and winch motor read 0 ± 100 psig or has a blank meter screen. Only the meters associated with a function that is currently being used will show a pressure reading. If the meter reads 100 or greater before the starting that sequence, contact COG before proceeding.

KRL 11/7/94 8.3.1.19 Verify hydraulic connections are not leaking. If piping requires tightening, then turn "HYDRAULIC PWR UNIT" switch to the "OFF" position and resolve leak. Restart system by repeating steps 8.3.1.9? - 8.3.1.12.?

KRL 11/7/94 8.3.1.20 Turn "HYDRAULIC PWR UNIT" switch to the "OFF" position.

KRL 11/7/94 8.3.1.21 Remove the crane hook from the eyebolt of the FR bag. Raise the crane hook at a constant rate provided by the Test Director. Record the rate displayed at the FR Control Panel "CRANE HOIST ELEVATION RATE (feet per minute)" meter and the rate displayed at the crane. Verify that the displayed values are consistent.

Rate at Crane: 9 ft/min

Rate at FR Trailer: 8.5 - 9.4 ft/min

********** CAMERA MONITORING **********

KRL 11/7/94 8.3.1.22 Under each monitor, ensure none of the buttons 1-8 are selected by being lit or by being depressed.

KRL 11/7/94 8.3.1.23 Under monitor #3, flip the "POWER" switches on camera control units 1 through 5 to the "ON" position and verify the green lights labeled "POWER" is lit for each controller.

KRL 11/7/94 8.3.1.24 Turn on VCR's 1 through 3 by pressing "POWER" button and ensure the "POWER" light for each is on.

KRL 11/7/94 8.3.1.25 Turn on the "SONY" Video monitors by pushing in the "POWER" button and verify that the green light for each is lit.

KRL 11/7/94 8.3.1.26 Turn on the Pan Tilt power.

KRL 11/7/94 8.3.1.27 Select camera's 1 through 3 for monitors 1 through 3 by pushing the appropriate button under each monitor.

KRL 11/7/94 8.3.1.28 Move the switch from the "OFF" position to "VERTICAL" position on the time/date generators 1-3 and verify time and date are displayed on each monitor.

KRL 11/7/94 8.3.1.29 Set the time and date according to the manufacturers manual if date/time isn't correct.

NOTE: ON CAMERAS
Adjustments to picture can be made by adjusting either the camera controls such as the "IRIS" or "WHITE BALANCE" or adjusting the monitor controls. If adjustments to these are not sufficient in giving a clear picture, then contact the Test Director or COG engineer.

Adjustments are not part of this testing but can be accomplished through use of the manufacture's operating manual.

8.3.2 Flexible Receiver Sequence

NOTE:
The following steps are to be performed in the order presented.

********** CAMERA MONITORING **********

The following test will use Table 2 to describe the flexible receiver cameras being tested and their features. It also includes what they are viewing.

Table 2. Flexible Receiver Camera Features

Camera	OPTIONS			View
	Zoom	Pan & Tilt	Lights	
1	NO	NO	YES	Receiver spool and equipment being removed.
2	NO	YES	NO	Hydraulic gauges and top assembly on Receiver.
3	NO	YES	NO	Hydraulic gauges and top assembly on Receiver.
4	YES	YES	NO	Overall view of Receiver located on trailer.
5	YES	YES	NO	Crane operations (optional)

6	YES	NO	NO	SPARE

Initial/Date

KRL 11/7/94 8.3.2.1 Perform the following camera tests for each monitor (3 total). Select cameras by the following method: Press a button numbered 1-8 located under each monitor (button #1 = camera #1 and so on). When pressed in, verify the button lamp is lit. To deselect a camera, push another button just enough in to cause the first selected button to pop out and the light goes off. Use only 1 monitor per each camera (e.g., do not have all 3 monitors showing the same camera). This will not harm the system but will degrade the camera signal.

KRL 11/7/94 8.3.2.2 For each VCR perform the following step (each VCR corresponds to a monitor eg VCR 1 = Monitor 1 and so on): Put a VHS tape in the VCR and press the "/FF" (forward), then the "stop", then the "REW/" rewind, then the "stop", then the "play", then "PAUSE /STILL", press "PAUSE/STILL" again then "STOP" and ensure they are operational. Using camera 2, toggle the camera after pressing the "RECORD" and verify each VCR can record by playing it back.

KRL 11/7/94 8.3.2.3 Place a tape in each VCR and record all activities of test at the time the Flexible Receiver Bag is being pulled up.

KRL 11/7/94 8.3.2.4 For monitor #1 select Camera 1: On the "CAMERA 1" controls, flip "LIGHT" switch to ON and verify the receiver spool chamber can be clearly seen on the monitors. Deselect Camera 1. Repeat for monitors 2 and 3.

KRL 11/7/94 8.3.2.5 For monitor #1 select Camera 2: On the "CAMERA #2 PAN - TILT" controls, toggle through each position and verify operation of camera position is consistent with view in monitors. Also verify clarity of picture. Deselect Camera 2. Repeat for monitors 2 and 3.

KRL 11/7/94 8.3.2.6 For monitor #1 select Camera 3: On the "CAMERA #1 PAN - TILT" controls, toggle through each position and verify operation of camera position is consistent with view in monitors. Also verify clarity of picture. Deselect Camera 3. Repeat for monitors 2 and 3.

KRL 11/7/94 8.3.2.7 For monitor #1 select Camera 4: On the "CAMERA #3 PAN - TILT" controls, toggle through each position and verify

operation of camera position is consistent with view in monitors. Also verify clarity of picture. On "CAMERA 4" controls, operate flip "ZOOM" switch between "TELE" and "WIDE" and verify the TELE position gives a close view and a WIDE gives a wide view. Deselect Camera 4. Repeat for monitors 2 and 3.

KRL 11/7/94 8.3.2.8 Turn off power to camera control units 4 and 5.

KRL 11/7/94 8.3.2.9 Use camera 4 with camera control unit 5 by taking the cable from the camera control unit 4 and connect it to camera control unit 5.

KRL 11/7/94 8.3.2.10 Turn on power to camera control units 4 and 5.

KRL 11/7/94 8.3.2.11 For monitor #1 select Camera 5: On the "CAMERA #3 PAN - TILT" controls, toggle through each position and verify operation of camera position is consistent with view in monitors. Also verify clarity of picture. On "CAMERA 5" controls flip the "ZOOM" switch between "TELE" and "WIDE" and verify the TELE position gives a close view and the WIDE position gives a wide view. Deselect camera 5. Repeat for monitors 2 and 3.

KRL 11/7/94 8.3.2.12 Turn off power to camera control units 4 and 5.

KRL 11/7/94 8.3.2.13 Return use the camera 4 to camera control unit 4 by taking the cable from the camera control unit 5 and connect it to camera control unit 4.

KRL 11/7/94 8.3.2.14 Turn on power to camera control units 4 and 5.

Note: Camera control unit 6 is a spare and does not provide a video signal.

NOTE: ON CAMERAS Use cameras throughout the test to visually inspect the operation unless called out in the procedure to field-verify. If cameras are unable to sufficiently monitor the operation, then document problem and inform COG engineer.

********** SPRAY WASH **********

KRL 11/7/94 8.3.2.15 Turn on vacuum blower motor.

KRL 11/7/94 8.3.2.16 Turn main power disconnect switch on the High Pressure Spray System (HPSS) Pump Trailer to "ON".

KRL 11/7/94 8.3.2.17 Verify the green "SYSTEM POWER OFF" indicator light is illuminated on the HPSS Control Panel located in the FR

Control Trailer.

KRL 11/7/94 8.3.2.18 Turn "SYSTEM POWER" keyswitch located on the HPSS control panel to the "ON" position. Verify the red "SYSTEM POWER ON" indicator light is illuminated and that the green "SYSTEM POWER OFF" light is not illuminated.

KRL 11/7/94 8.3.2.19 Visually verify that the HPSS control panel meters have power in the FR Control Trailer.

KRL 11/7/94 8.3.2.20 Push "LAMP TEST" button and verify all indicator lamps become illuminated on the HPSS control panel in the FR Control Trailer.

KRL 11/7/94 8.3.2.21 Verify the green pilot lamp labeled "CONTINUITY GOOD" under "SYSTEM CONTINUITY" is lit and the red pilot lamp labeled "CONTINUITY LOST" is not lit. Do not proceed until this step is verified unless directed by COG Engineer.

KRL 11/7/94 8.3.2.22 Zero the "FLOW TOTALIZER" meter on the HPSS control panel according to the manufacturers instructions in the FR Control Trailer.

Note: Unless otherwise noted, the following steps will all be performed at the HPSS Pump Trailer Control Panel.

KRL 11/7/94 8.3.2.23 Zero the "TOTAL FLOW" meter according to the manufacturers instructions on the HPSS Pump Trailer.

KRL 11/7/94 8.3.2.24 Place the "LOCAL/REMOTE SWITCH" in the "LOCAL" position.

KRL 11/7/94 8.3.2.25 Place the "MOTOR SPEED" switch in the "MINIMUM" position at the HPSS Pump Trailer.

KRL 11/7/94 8.3.2.26 Verify that water in the water truck is at least half full.

KRL 11/7/94 8.3.2.27 Open the feed water line valve on the water truck.

KRL 11/7/94 8.3.2.28 Bleed air from lines to portable feed pump.

KRL 11/7/94 8.3.2.29 Start the portable feed pump located between the HPSS Pump Trailer and the water supply truck according to the manufacturers instructions provided by the test director.

KRL 11/7/94 8.3.2.30 Pull out the "STOP" button on the HPSS Pump Trailer.

KRL 11/7/94 8.3.2.31 Push the "PUMP CONTROL START" button at the HPSS pump trailer. Slowly increase the "MOTOR SPEED" switch to

obtain discharge pressure of 3000 +/- 100 psi or at a discharge pressure directed by the Test Director. Verify the HPSS pump begins operating.

KRL 11/7/94 8.3.2.32 Push the "PUMP CONTROL STOP" button at the HPSS Pump Trailer. Verify the HPSS pump operation is stopped.

KRL 11/7/94 8.3.2.33 Place the "MOTOR SPEED" switch in the "MINIMUM" position at the HPSS Pump Trailer.

KRL 11/7/94 8.3.2.34 Pull out the "PUMP CONTROL STOP" button.

KRL 11/7/94 8.3.2.35 Place the "LOCAL/REMOTE SWITCH" in the remote position.

NOTE: Unless otherwise noted, the following steps will be performed at the HPSS Control Panel located in the FR Control Trailer.

KRL 11/7/94 8.3.2.36 Put the "PUMP CONTROL MOTOR SPEED" in the minimum position in the FR Control Trailer.

KRL 11/7/94 8.3.2.37 Push the "PUMP CONTROL PUMP MOTOR START" button in the FR Control Trailer. Increase the "PUMP CONTROL MOTOR SPEED" to obtain discharge pressure of 1000 +/- 100 psi. Verify the HPSS pump begins operation.

KRL 11/7/94 8.3.2.38 Push the "PUMP CONTROL EMERGENCY STOP" button in the FR Control Trailer. Verify the HPSS pump operation is stopped.

KRL 11/7/94 8.3.2.39 Put the "PUMP CONTROL MOTOR SPEED" in the minimum position in the FR Control Trailer.

KRL 11/7/94 8.3.2.40 Push the "PUMP CONTROL PUMP MOTOR START" button in the FR Control Trailer. Increase the "PUMP CONTROL MOTOR SPEED" to obtain discharge pressure of 1000 +/- 100 psi. Verify the HPSS pump begins operation.

KRL 11/7/94 8.3.2.41 Push the "PUMP CONTROL STOP" button located at the HPSS Pump Trailer. Verify the HPSS Pump operation is stopped.

KRL 11/7/94 8.3.2.42 Push the "PUMP CONTROL STOP" button in the FR Control Trailer.

KRL 11/7/94 8.3.2.43 Put the "PUMP CONTROL MOTOR SPEED" at the minimum setting in the FR Control Trailer and pull out the "PUMP CONTROL STOP" button located on the HPSS Pump Trailer.

KRL 11/7/94 8.3.2.44 Push the "PUMP CONTROL PUMP MOTOR START" button in the FR Control Trailer. Increase the "PUMP CONTROL MOTOR SPEED"

to obtain discharge pressure of 3000 +/- 100 psi or at a discharge pressure directed by the Test Director. Verify the HPSS pump begins operation.

KRL 11/7/94 8.3.2.45 Verify there are no visible leaks in the HPSS or record location of leaks and/or repair leakage and then record the following. Local readings are taken at the HPSS Pump trailer control panel. Remote readings are taken at the HPSS control panel in the FR Control Trailer. "Total Flow" and "Flow Totalizer" readings are to be taken simultaneously. Verify the "Discharge Temperature" is 150°F +10°F/-30°F and that local/remote readings are consistent.

	LOCAL		REMOTE	
Suction Pressure	95	psi	95	psi
Discharge Pressure	3800	psi	N/A	
Regulator Discharge Pressure	2990	psi	3010	psi
Suction Temperature	FAILURE	°F	N/A	
Discharge Temperature	144.5	°F	143	°F
Flow / Flow Indicator	50	GPM	50.3	GPM
Total Flow / Flow Totalizer	221	Gallons	323	Gallons
Ammeter	92	amps	N/A	
Frequency Meter	56	Hz	N/A	

LOCAL/REMOTE READ AT DIFF. TIMES.

********** CRANE/PULLING OPERATION **********

KRL 11/7/94 8.3.2.46 SEE EXCEPTION # 1 Record and verify that the test pit vacuum is between 0.25 and 2 inches of water.
Pit Vacuum: 3.6"

KRL 11/7/94 8.3.2.47 Record and verify that the wind velocity is 10 mph or less.
Wind Velocity: 2-3 mph

KRL 11/7/94 8.3.2.48 Attach the crane hook to the eyebolt of the FR bag. Reset the crane total height meter to zero and then raise the crane hook at a constant rate provided by the Test Director.

KRL 11/7/94 8.3.2.49 Start recording on all three VCR's.

KRL 11/7/94 8.3.2.50 Observe the bag rings coming off of the stanchions. Verify there is no binding and that the rings are not separated from the bag.

KRL 11/7/94 8.3.2.51 SEE TEST LOG COMMENT SHEET Have crane stop pulling at about 20 ft and lower equipment back down about 8 ft. Lowering the bag 8 ft will simulate rewashing a section of the pump. Raise the bag 8 ft. After raising the bag the bag should not have overlapped on itself. Performing the next step is at the discretion of the Test Director. Lower the equipment 10 -15 ft using the emergency ring replacing rod. Verify emergency rod with a hook can help in putting the rings back on the guide poles. Note: When the emergency ring replacing rod is used, the access window needs to be removed causing minimal negative pressure in the bag to facilitate ring replacement.

KRL 11/7/94 8.3.2.52 Start raising the bag until the closure indexing lines are in-line (Indexing lines are the lines marked on the stanchions and the first horizontal line on the bag). **STOP** raising the bag when the indexing lines are in alignment.
Record the crane hook elevation 46.9 ft.

KRL 11/7/94 8.3.2.53 Slowly reduce pressure on the HPSS pump by turning the "PUMP CONTROL MOTOR SPEED" to the minimum setting in the FR Control Trailer and press the stop button.

KRL 11/7/94 8.3.2.54 Stop the portable feed pump and turn off the feed line valve on the water truck.

********** **BAGGING OPERATION** **********

KRL 11/7/94 8.3.2.55 Turn "HYDRAULIC PWR UNIT" switch to the "ON" position.

KRL 11/7/94 8.3.2.56 At the FR control panel, turn and HOLD the "WINCH MOTORS" switch in the "ON" position for 30 to 45 seconds after the cables have stopped (visually determined by camera) and verify wire rope tightens around the bag forming seals both above and below the cutting blade and the bag tie wraps break without tearing the bag. Verify amber light on switch is lit. Verify and record "WINCH MOTORS" "HYDRAULIC PRESSURE" reach 1250 ± 200 psig from the control panel meter and local gauge on the receiver.
Control Panel: 1190 psig Local Gauge: 1300 psig

KRL 11/7/94 8.3.2.57 Release the "WINCH MOTORS" switch letting it spring return to the "OFF" position. Verify amber light in the switch is not lit. Verify and record "WINCH MOTORS" "HYDRAULIC PRESSURE" reach 0 ± 100 psig from the local

gauges on the receiver.
Local Gauge: 0 psig

********** Loss Power/ Sequence Resume Test**********

KRL 11/7/94 8.3.2.58 Turn the "SYSTEM CONTROL POWER " key switch to the "OFF" position.

KRL 11/7/94 8.3.2.59 Wait 5 to 10 seconds, then turn the "SYSTEM CONTROL POWER" key switch to the "ON" position, press and release the "RESET" button.

KRL 11/7/94 8.3.2.60 Verify the sequence continues by "HYDRAULIC POWER" light switch illuminated, hydraulic pump is running and by performing the next step which is crimping the cable. If the next step cannot be performed, then Stop test and contact COG engineer or Test Director.

****

KRL 11/7/94 8.3.2.61 At the FR control panel in the trailer, turn the "UPPER CABLE CLAMP" switch to "CRIMP" position and hold until pressure on the control panel meter "HYDRAULIC PRESSURE" reaches 3000 ± 300 psig. Verify amber light on switch is lit. Record "UPPER CABLE CLAMP" "HYDRAULIC PRESSURE" from the control panel meter and local gauges on the receiver.
Control Panel: 3326 psig Local Gauge: 3000 psig

KRL 11/7/94 8.3.2.62 Return "UPPER CABLE CLAMP" switch to the "OFF" position. Verify amber light on switch is not lit. Verify and record "UPPER CABLE CLAMP" "HYDRAULIC PRESSURE" returned to 0 ± 100 psig from the local gauge on the receiver.
Local Gauge: 0 psig

KRL 11/7/94 8.3.2.63 Turn the "UPPER CABLE CLAMP" switch to "OPEN" position and hold until pressure reading on the control panel meter "UPPER CABLE CLAMP HYDRAULIC PRESSURE" reaches at least 500 ± 200 psig. Verify amber light on switch is lit. Record "UPPER CABLE CLAMP HYDRAULIC PRESSURE" from the control panel meter and local gauges on the receiver.
Control Panel: 3000 psig Local Gauge: 3000 psig

KRL 11/7/94 8.3.2.64 Return "UPPER CABLE CLAMP" switch to the "OFF" position. Verify amber light on switch is not lit. Verify and record "UPPER CABLE CLAMP" "HYDRAULIC PRESSURE" returned to 0 ± 100 psig from the local gauges on the receiver.
Local Gauge: 0 psig

KRL 11/7/94 8.3.2.65 At the FR control panel in the trailer, turn the "LOWER

CABLE CLAMP" switch to "CRIMP" position and hold until pressure on the control panel meter "LOWER CABLE CLAMP HYDRAULIC PRESSURE" reaches 3000 ± 300 psig. Verify amber light on switch is lit. Record "LOWER CABLE CLAMP HYDRAULIC PRESSURE" from the control panel meter and local gauges on the receiver.
Control Panel: 2972 psig Local Gauge: 3000 psig

KRL 11/7/94 8.3.2.66 Return "LOWER CABLE CLAMP" switch to the "OFF" position. Verify amber light on switch is not lit. Verify and record "LOWER CABLE CLAMP" "HYDRAULIC PRESSURE" returned to 0 ± 100 psig from the local gauges on the receiver.
Local Gauge: 0 psig

KRL 11/7/94 8.3.2.67 Turn the "LOWER CABLE CLAMP" switch to "OPEN" position and hold until pressure on the control panel meter "LOWER CABLE CLAMP HYDRAULIC PRESSURE" reaches at least 500 ± 200 psig. Verify amber light on switch is lit. Record "LOWER CABLE CLAMP HYDRAULIC PRESSURE" from the control panel meter and local gauges on the receiver.
Control Panel: 2975 psig Local Gauge: 3000 psig

KRL 11/7/94 8.3.2.68 Return "LOWER CABLE CLAMP" switch to the "OFF" position. Verify amber light on switch is not lit. Verify and record "LOWER CABLE CLAMP HYDRAULIC PRESSURE" returned to 0 ± 100 psig from the local gauges on the receiver.
Local Gauge: 0 psig

KRL 11/7/94 8.3.2.69 At the FR control panel in the trailer, turn the "BAG CUTTER" switch to the "CLOSE" position and hold until pressure on the control panel meter "BAG CUTTER HYDRAULIC PRESSURE" reaches at least 1000 ± 300 psig, then return switch to the "OFF" position. Verify that the "BAG CUTTER OPENING" amber light is only lit while performing operation. Record final "BAG CUTTER HYDRAULIC PRESSURE" from the control panel meter and local gauges on the receiver. Also visually verify blades at the FR fully closed and the bag is cut.
Control Panel: 978 psig Local Gauge: 1000 psig

KRL 11/7/94 8.3.2.70 Turn the "BAG CUTTER" switch to the "OPEN" position and hold until pressure on the control panel meter "BAG CUTTER HYDRAULIC PRESSURE" reaches at least 500 ± 100 psig or until blades fully open, then return switch to the "OFF" position. Verify that the "BAG CUTTER/CLOSING" amber light is only lit while performing operation. Record final "BAG CUTTER HYDRAULIC PRESSURE" from the control panel meter and local gauges on the receiver.
Control Panel: 1032 psig Local Gauge: 1100 psig

CAUTION: In the following step do not hold the cable cutter switch in the "ON" position after the cable has been cut, this will damage the cable cutter.

KRL 11/7/94 8.3.2.71 At the FR control panel in the trailer, turn the "CABLE CUTTER UPPER" switch to the "ON" position and hold for 5 sec. or until the cable has been cut, then release the switch to spring return to the "OFF" position. Verify amber light on switch is only lit when switch is in the "ON" position. Visually verify that upper cable has been fully cut and that the clamp has held. (Field verification may also be used.)

CAUTION: In the following step do not hold the cable cutter switch in the "ON" position after the cable has been cut, this will damage the cable cutter.

KRL 11/7/94 8.3.2.72 At the FR control panel, turn the "CABLE CUTTER LOWER" switch to the "ON" position and hold for 5 sec. or until the cable has been cut, then release the switch to spring return to the "OFF" position. Verify amber light on switch is only lit when switch is in the "ON" position. Visually verify that lower cable has been fully cut and that the clamp has held. (Field verification may be used.)

KRL 11/7/94 8.3.2.73 Verify the FR bag is fully cut.

KRL 11/7/94 8.3.2.74 Verify cable is tight around both ends of the bag and has not slipped off.

8.3.3 Secondary Bagger Operations

The sealed end of the primary bag is placed in the Secondary bagger machine. A second bag is applied over the lower portion of the Primary bag to provide a secondary "back-up" barrier. The secondary bag is intended to contain contamination on or between the upper cable seal and the bottom of the primary bag.

KRL 11/7/94 8.3.3.1 Using the crane move the bagged equipment over to the secondary bagging station and place primary bag in secondary bag approximately 2 to 3 feet. Stop so that the cable on the Secondary Containment Assembly is between the rings of the bag.

KRL 11/7/94 8.3.3.2 SEE EXCEPTION #2 At the FR control panel, turn and HOLD the "WINCH MOTORS" switch in the "ON" position for 30 to 45 seconds after the cables have stopped (visually determined by camera) and verify wire rope tightens around the bag forming seals both above and below the cutting blade and the bag

tie wraps break without tearing the bag. Verify amber light on switch is lit. Verify and record "WINCH MOTORS" "HYDRAULIC PRESSURE" reach 1250 ± 200 psig from the control panel meter and local gauge on the receiver.
Control Panel: 960 psig Local Gauge: 1100 psig

KRL 11/7/94 8.3.3.3 Return "WINCH MOTOR" switch to the "OFF" position. Verify amber light in the switch is not lit. Verify and record "WINCH MOTORS HYDRAULIC PRESSURE" reach 0 ± 100 psig from the local gauges on the secondary bagger.
Local Gauge: 0 psig

KRL 11/7/94 8.3.3.4 At the FR control panel under "SECONDARY CONTROL SYSTEM" in the trailer, turn the "CABLE CLAMP" switch to "CRIMP" position and hold until pressure on the control panel meter "CABLE CLAMP HYDRAULIC PRESSURE" reaches 3000 ± 300 psig. Verify amber light in the switch is lit when holding. Record "CABLE CLAMP HYDRAULIC PRESSURE" from the control panel meter and local gauges on the secondary bagger.
Control Panel: 2883 psig Local Gauge: 3000 psig

KRL 11/7/94 8.3.3.5 Return "CABLE CLAMP" switch to the "OFF" position. Verify amber light in the switch is not lit. Verify and record "CABLE CLAMP HYDRAULIC PRESSURE" returned to 0 ± 100 psig from the local gauges on the secondary bagger.
Local Gauge: 0 psig

KRL 11/7/94 8.3.3.6 SEE EXCEPTION # 3 Turn the "CABLE CLAMP" switch to "OPEN" position and hold until pressure on the control panel meter "CABLE CLAMP HYDRAULIC PRESSURE" reaches 500 ± 200 psig. Verify amber light in the switch is lit when holding. Record "CABLE CLAMP HYDRAULIC PRESSURE" from the control panel meter and local gauges on the secondary bagger.
Control Panel: 1232 psig Local Gauge: 900 psig

KRL 11/7/94 8.3.3.7 Return "CABLE CLAMP" switch to the "OFF" position. Verify amber light in the switch is not lit. Verify and record "CABLE CLAMP HYDRAULIC PRESSURE" returned to 0 ± 100 psig from the local gauges on the secondary bagger.
Local Gauge: 0 psig

CAUTION: In the following step do not hold the cable cutter switch in the "ON" position after the cable has been cut, this will damage the cable cutter.

KRL 11/7/94 8.3.3.8 On the FR control panel under "SECONDARY CONTROL SYSTEM" turn the "CABLE CUTTER" switch to the "ON" position and

hold for 5 sec. or until the cable has been cut, then release the switch to spring return to the "OFF" position. Verify amber light on switch is only lit when switch is in the "ON" position. Visually verify that cable has been fully cut and that the clamp has held. (Field verification may also be used.)

KRL 11/7/94 8.3.3.9 Lower the encapsulated simulated pump to the ground. Block as required to prevent the pump from moving. Remove the crane lifting hook from the bag eye.

KRL 11/7/94 8.3.3.10 Stop recording on the VCR's.

KRL 11/7/94 8.3.3.11 Turn the "HYDRAULIC PWR UNIT" switch to the "OFF" position. Turn the "START SEQUENCE" switch to the "OFF" position. Turn the "SYSTEM CONTROL POWER" switch to the "OFF" position.

8.3.4 Manual Control

The use of MANUAL CONTROL requires the use of a key switch. When the MANUAL CONTROL key switch is placed in the ON position, the amber light by the MANUAL CONTROL key switch lights and the controller performs any requested operation without regard to the interlocks or sequence.

> **NOTE:** Operation of the MANUAL CONTROL key switch will disrupt the control sequence. Once the MANUAL CONTROL key switch is used to perform an out of sequence action, the remaining operations must be completed under manual control.

Initial/Date

KRL 11/7/94 8.3.4.1 Verify there is power to the FR control rack. This is denoted by a lit green lamp labeled "POWER OFF" under "SYSTEM CONTROL POWER".

KRL 11/7/94 8.3.4.2 Turn FR control system power ON by rotating "SYSTEM CONTROL POWER" control key to the ON position. A red panel light labeled "POWER ON" under "SYSTEM CONTROL POWER" indicates the power is applied to the Control System when lit.

KRL 11/7/94 8.3.4.3 Turn the "START SEQUENCE" key switch to the "ON" position and verify the green pilot lamp labeled "READY" is lit.

KRL 11/7/94 8.3.4.4 Turn the "MANUAL CONTROL KEY" to the on position.

KRL 11/7/94 8.3.4.5 Turn "HYDRAULIC PWR UNIT" switch to the "ON" position and verify green lamp in the switch is lit and the Hydraulic power unit motor is operating by visual inspection.

NOTE: The following manual steps are to be field verified since this is only a verification that a function operates.

KRL 11/7/94 8.3.4.6 On the FR control panel in the trailer, turn and HOLD the "WINCH MOTORS" switch to the "ON" position and verify motors are operating. Switch to the "OFF" position and verify the motors stop running.

KRL 11/7/94 8.3.4.7 On the FR control panel in the trailer under the "SECONDARY / CONTROL / SYSTEM", turn and HOLD the "WINCH MOTOR" switch to the "ON" position and verify motor is operating on the secondary bag receiver. Switch to the "OFF" position and verify it stops running.

KRL 11/7/94 8.3.4.8 On the FR control panel in the trailer, turn the "UPPER / CABLE CLAMP" switch to "CRIMP" position and verify panel amber light on switch is lit and in the field, movement of crimper. **DO NOT HOLD FOR A LONG PERIOD OF TIME, ONLY VERIFY MOVEMENT OF ACTUATOR.**

KRL 11/7/94 8.3.4.9 Release the "UPPER CABLE CLAMP" switch so it spring returns to the "OFF" position. Verify amber light in the switch is not lit and in the field, crimper does not move.

KRL 11/7/94 8.3.4.10 Turn the "UPPER CABLE CLAMP" switch to "OPEN" position and verify the amber light in the switch is lit and in the field, movement of crimper. **DO NOT HOLD FOR A LONG PERIOD OF TIME, ONLY VERIFY MOVEMENT OF ACTUATOR.**

KRL 11/7/94 8.3.4.11 Release the "UPPER CABLE CLAMP" switch to the "OFF" position. Verify the amber light in the switch is not lit and in the field, verify the crimper does not move.

KRL 11/7/94 8.3.4.12 On the FR control panel under "SECONDARY CONTROL SYSTEM" turn the "CABLE CLAMP" switch to "CRIMP" position and verify the amber light in the switch is lit and in the field verify movement of the crimper. **DO NOT HOLD FOR A LONG PERIOD OF TIME, ONLY VERIFY MOVEMENT OF ACTUATOR.**

KRL 11/7/94 8.3.4.13 Release the "CABLE CLAMP" switch to the "OFF" position. Verify the amber light in the switch is not lit and in the field verify the crimper does not move.

KRL 11/7/94 8.3.4.14 Turn the "CABLE CLAMP" switch to "OPEN" position and verify the amber light in the switch is lit. In the field verify movement of the crimper. **DO NOT HOLD FOR A LONG PERIOD OF TIME, ONLY VERIFY MOVEMENT OF ACTUATOR.**

KRL 11/7/94 8.3.4.15 Release the "CABLE CLAMP" switch to the "OFF" position. Verify the amber light in the switch is not lit and in the field verify the crimper does not move.

KRL 11/7/94 8.3.4.16 At the FR control panel turn the "LOWER CABLE CLAMP" switch to the "CRIMP" position and verify the amber light in the switch is lit. In the field verify movement of the crimper. **DO NOT HOLD FOR A LONG PERIOD OF TIME, ONLY VERIFY MOVEMENT OF ACTUATOR.**

KRL 11/7/94 8.3.4.17 Release the "LOWER CABLE CLAMP" switch to the "OFF" position. Verify the amber light in the switch is not lit and in the field verify the crimper does not move.

KRL 11/7/94 8.3.4.18 Turn the "LOWER CABLE CLAMP" switch to the "OPEN" position and verify the amber light in the switch is lit and in the field verify movement of the crimper. **DO NOT HOLD FOR A LONG PERIOD OF TIME, ONLY VERIFY MOVEMENT OF ACTUATOR.**

KRL 11/7/94 8.3.4.19 Release the "LOWER CABLE CLAMP" switch to the "OFF" position. Verify the amber light in the switch is not lit and in the field verify the crimper does not move.

KRL 11/7/94 8.3.4.20 At the FR control panel turn the "BAG CUTTER" switch to the "CLOSE" position. Verify that the "BAG CUTTER CLOSING" amber light is only lit while performing the operation. Verify that the bag cutter blades close.

KRL 11/7/94 8.3.4.21 Turn the "BAG CUTTER" switch to the "OFF" position. Verify that the "BAG CUTTER" amber light is only lit while performing the operation.

KRL 11/7/94 8.3.4.22 Turn the "BAG CUTTER" switch to the "OPEN" position. Verify that the "BAG CUTTER OPENING" amber light is only lit while performing the operation. Verify that the bag cutter blades open.

KRL 11/7/94 8.3.4.23 Turn the "BAG CUTTER" switch to the "OFF" position. Verify that the "BAG CUTTER" amber light is only lit while performing the operation.

KRL 11/7/94 8.3.4.24 At the FR control panel under "SECONDARY CONTROL SYSTEM" turn the "CABLE CUTTER" switch to the "ON" position and then return it to the "OFF" position. Verify the amber

light in the switch is only lit when the switch is in the "ON" position. Verify that the cable cutter functions.

KRL 11/7/94 8.3.4.25 At the FR control panel turn the "CABLE CUTTER UPPER" switch to the "ON" position and then return it to the "OFF" position. Verify amber light in the switch is only lit when the switch is in the "ON" position. Verify that the cable cutter functions.

KRL 11/7/94 8.3.4.26 At the FR control panel turn the "CABLE CUTTER LOWER" switch to the "ON" position and then return it to the "OFF" position. Verify the amber light in the switch is only lit when the switch is in the "ON" position. Verify that the cable cutter functions.

8.3.5 Master Reset

The control system will initialize/clear all sequential flags etc. and return to the beginning of the operational sequence.

KRL 11/7/94 8.3.5.1 Verify the MANUAL CONTROL key switch is in the ON position.

KRL 11/7/94 8.3.5.2 Attach the PLC accessories needed to monitor the status of internal coils 300_{HEX} - 307_{HEX}, 310_{HEX} - 315_{HEX} and 317_{HEX}.

KRL 11/7/94 8.3.5.3 Press the RESET button. Verify this turns off all internal coils (listed above) from on to off and returns the operational sequence to the beginning of the cycle/sequence. Release the RESET button.

KRL 11/7/94 8.3.5.4 Turn the MANUAL CONTROL POWER key switch to the OFF position and remove the key. Remove the PLC accessories.

KRL 11/7/94 8.3.5.5 Turn the following power switches to the OFF position.

- Hydraulic Power Unit
- Start Sequence
- Flexible Receiver System Control Power
- High Pressure Spray System Control Power

9.0 REFERENCES

9.1 DRAWINGS

For the 42": See H-2-79341 "TWRS Drawing Index 42" Tank 101-AZ Waste Retrieval System" for the list of drawings that apply.

For the 4"-6": See H-2-79335 "TWRS Drawing Index 4"-6" Tank 101-AZ

Waste Retrieval System" for the list of drawings that apply.

9.2 VENDOR INFORMATION

- Series One (tm) Junior Programmable Controller Users Manual by GE Fanuc Automation (part number GEK-90503A, March 1987)
- Operating Instructions - Panasonic, VHS, AG-1970P, Video Cassette Recorder
- Appendix E Model 2380-200 Camera Control Unit - COHU

9.3 OTHER INFORMATION

9.3.1 WHC-SD-W151-FDC-001, Rev. 2, "Functional Design Criteria, Project W151, 101-AZ Waste Retrieval System".

9.3.2 WHC-SD-W151-CDR-001, "Conceptual Design Report, Tank 101-AZ Waste Retrieval System, Project W151".

9.3.3 WHC-SD-W151-SDRD-001, "Supplemental Design Requirements Document, 241-AZ-101 Waste Retrieval System".

9.3.4 WHC-SD-W151-CSWD-001, "Design Description for the Flexible Receiver Control System".

9.3.5 WHC-SD-W151-TRP-001, "Interim Development Test Report for Project W151 4/6 Inch Flexible Receiver and Thermocouple Tool".

9.3.6 WHC-SD-W320-FDC-001, Rev 2 "Functional Design Criteria for Tank 241-C-106 Waste Retrieval, Project W-320"

9.3.7 DOE-RL-92-36, "Hanford Site Hoisting and Rigging Manual."

9.3.8 WHC-SD-W151-CSCM-001, Rev 0 "Software Configuration Management Plan for the Flexible Receiver Control System"

9.3.9 WHC-SD-W151-ATR-001, "Project W-151 Flexible Receiver Radiation Detector System Acceptance Test Report".

10.0 DATA SHEETS

10.1 TEST EXCEPTION SHEET

Exception Data Sheets are used to document exceptions to the test procedure and results. A description of the exception and the disposition are provided on the exception sheet. Typical dispositions are:

1. Test approved with exception (i.e., rerun of the acceptance test unnecessary).

2. Acceptance Test Procedure step(s) affected to be repeated after the discrepancy has been corrected.

The following is the Test Exception Sheet that will be used. Additional copies will be made as needed.

10.2 TEST LOG SHEET

Test Log Sheets will be used to document test start and stop times and to document any notes concerning the execution of the Qualification Test Procedure.

The following is the test log sheet that will be used. Additional copies will be made as needed.

TEST LOG

DATE/TIME	COMMENTS
11/7/94 09:30 AM	8.3.2.51 - EQUIPMENT WAS NOT LOWERED 10-15 FEET USING THE EMERGENCY RING REPLACING ROD.

TEST EXCEPTIONS

EXCEPTION NO: 1

PROCEDURE STEP NO: 8.3.2.46

DATE: 11/7/94

DESCRIPTION:

PIT VACUUM WAS 3.6", OVER THE 0.25" TO 2" REQUIREMENT DUE TO DESIGN OF HVAC SYSTEM. REGULATION OF PIT VACUUM TO A LOWER READING WAS NOT POSSIBLE. ALSO, READING OF PIT VACUUM SHOULD BE TAKEN AT THE SAME TIME THAT STEP 8.3.2.51 IS.

RESOLUTION:

ACCEPT AS IS

APPROVALS:

Dave Sparks 11/7/94
TEST DIRECTOR DATE

O Widden 11-7-94
QUALITY ASSURANCE DATE

Don Legare 11/7/94
DATE

Kiane R Jess 11/7/94
DATE

TEST EXCEPTIONS

EXCEPTION NO: 2

PROCEDURE STEP NO: 8.3.3

DATE: 11/7/94

DESCRIPTION:

THE MANUAL CONTROL KEY HAD TO BE TURNED TO THE ON POSITION BETWEEN STEPS 8.3.3.1 AND 8.3.3.2 DUE TO THE FACT THAT THE "CABLE CUTTER LOWER" WAS NOT ACTIVATED LONG ENOUGH IN STEP 8.3.2.72 TO TRIP OUT THE RELAYS IN THE PLC.

RESOLUTION:

ACCEPT AS IS. TIMING CONTROL LOGIC WILL BE ADJUSTED, BY WHC.

APPROVALS:

Dave Sparks 11/7/94
TEST DIRECTOR DATE

[signature] 11-7-94
QUALITY ASSURANCE DATE

[signature] 11/7/94
DATE

[signature] 11/7/94
DATE

TEST EXCEPTIONS

EXCEPTION NO: 3

PROCEDURE STEP NO: 8.3.3.6 DATE: 11/7/94

DESCRIPTION:

THE STEP READS TURN THE "CABLE CLAMP" . . . . . REACHES 500 ± 200 PSIG. THE STEP SHOULD READ "AT LEAST" PRIOR TO 500 ± 200 PSIG.

RESOLUTION:

ACCEPT AS IS. COG. ENGR. TO REV. PROCEDURE.

APPROVALS:

Dave Sparks 11/7/94
TEST DIRECTOR DATE

[signature] 11-7-94
QUALITY ASSURANCE DATE

Don Legare 11/7/94
DATE

[signature] 11/7/94
DATE