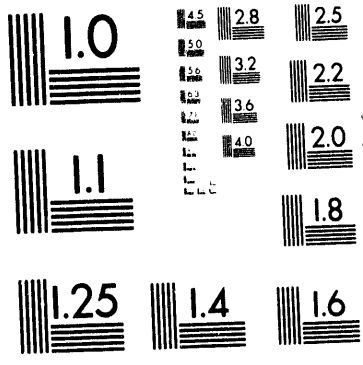
1.0
2.8
2.5
3.2
2.2
3.6
2.0
4.0
1.1
1.8
1.25
1.4
1.6

1 of 1

CONF-940553--29

WHC-SA-2100-FP

Remote Infrared Imaging System for Scanning Hazardous Waste Tanks

Prepared for the U.S. Department of Energy
Office of Environmental Restoration and
Waste Management

Westinghouse
Hanford Company Richland, Washington

Hanford Operations and Engineering Contractor for the
U.S. Department of Energy under Contract DE-AC06-87RL10930

Copyright License By acceptance of this article, the publisher and/or recipient acknowledges the U.S. Government's right to retain a nonexclusive, royalty-free license in and to any copyright covering this paper.

Approved for Public Release

DISTRIBUTION OF THIS DOCUMENT IS UNLIMITED

LEGAL DISCLAIMER

This report was prepared as an account of work sponsored by an agency of the United States Government. Neither the United States Government nor any agency thereof, nor any of their employees, nor any of their contractors, subcontractors or their employees, makes any warranty, express or implied, or assumes any legal liability or responsibility for the accuracy, completeness, or any third party's use or the results of such use of any information, apparatus, product, or process disclosed, or represents that its use would not infringe privately owned rights. Reference herein to any specific commercial product, process, or service by trade name, trademark, manufacturer, or otherwise, does not necessarily constitute or imply its endorsement, recommendation, or favoring by the United States Government or any agency thereof or its contractors or subcontractors. The views and opinions of authors expressed herein do not necessarily state or reflect those of the United States Government or any agency thereof.

This report has been reproduced from the best available copy.

Printed in the United States of America

DISCLM-2.CHP (1-91)

WHC-SA-2100-FP

Remote Infrared Imaging System for Scanning Hazardous Waste Tanks

K. L. Morris

Date Published
January 1994

To Be Presented at
1994 International High-Level
Radioactive Waste
Management Conference
Las Vegas, Nevada
May 22-26, 1994

To Be Published in
Proceedings

Prepared for the U.S. Department of Energy
Office of Environmental Restoration and
Waste Management

Westinghouse Hanford Company
P.O. Box 1970
Richland, Washington 99352

Hanford Operations and Engineering Contractor for the
U.S. Department of Energy under Contract DE-AC06-87RL10930

Copyright License By acceptance of this article, the publisher and/or recipient acknowledges the U.S. Government's right to retain a nonexclusive, royalty-free license in and to any copyright covering this paper.

MASTER

Approved for Public Release

DISTRIBUTION OF THIS DOCUMENT IS UNLIMITED

REMOTE INFRARED SYSTEM FOR SCANNING HAZARDOUS WASTE TANKS

Kim L. H. Morris
Westinghouse Hanford Company
P.O. Box 1970
Richland, Washington 99352
(509)376-8843

ABSTRACT

This paper provides a description of the deployment of an infrared imaging system in an underground radioactive waste storage tank. The system was made for surface scanning to detect regions of high heat if present. The deployment described was for testing the system's capabilities as well as the logistics of deployment and the system's functionality in the field. The system was deployed and removed successfully providing a surface scan of the tank. Some improvements are recommended.

I. INTRODUCTION

The U.S. Department of Energy's Hanford Site, located in south-central Washington State, is home to 177 underground radioactive waste storage tanks. To varying degrees, heat is generated in these storage tanks because of radioactive isotope activity. In some cases, waste temperature changes may occur as a result of historical additions of certain chemicals (such as ferrocyanide). Because of these additions of potentially reactive chemicals, a method was tested at the Hanford Site to systematically scan the entire surface of a "typical" storage tank to investigate the heat-generating properties of the waste. The Hanford Site waste tanks are not designed for easy access. In particular, they pose many challenges for entering remote surveillance systems into the storage tanks. If there mechanical method to locate an infrared (IR) scanner system in the Hanford Site waste storage tanks is provided in this presentation. A thermal map also was generated from this work, but is described in other reports.[1]

II. DESIGN FEATURES

The IR scanner system (see Figures 1 and 2) used at the Hanford Site was designed as a reusable unit for remote scanning of surface waste temperatures inside selected single-shell tanks at the Hanford Site. The design specification was to scan 24 tanks. Based on the effectiveness of the shielding and an allowable life dose of 1000 R to the scanner electronics, the maximum radiation dose rate to scan 24 tanks is approximately 20 R/hour. This dose rate depends on the installation and operation time required to scan the entire surface of a tank.[2] The IR system was laboratory tested for operation, and both mechanical and IR operations were tested before deployment.[1,3]

The IR scanner was housed in a lead-lined box made of two halves bolted and sealed with lead gasketing. The minimum shielding was 2.54 cm (1 in.) at any point, yielding a 68-kg (150-lb.) box that provided only about .6 cm (0.24 in.) of clearance in some places. The system was required to fit within a 30.5-cm diameter (12-in.) pipe. This high mass, and the fact that the camera must be deployed down a 30.5-cm (12-in.) or less pipe, proved to be challenging. The hydraulic pan and tilt unit used was the smallest off-the-shelf unit available with enough power to move the load at the time of fabrication. Electrical pan and tilt units are available that provide enough power but these are larger than 30.5 cm (12 in.) in diameter.

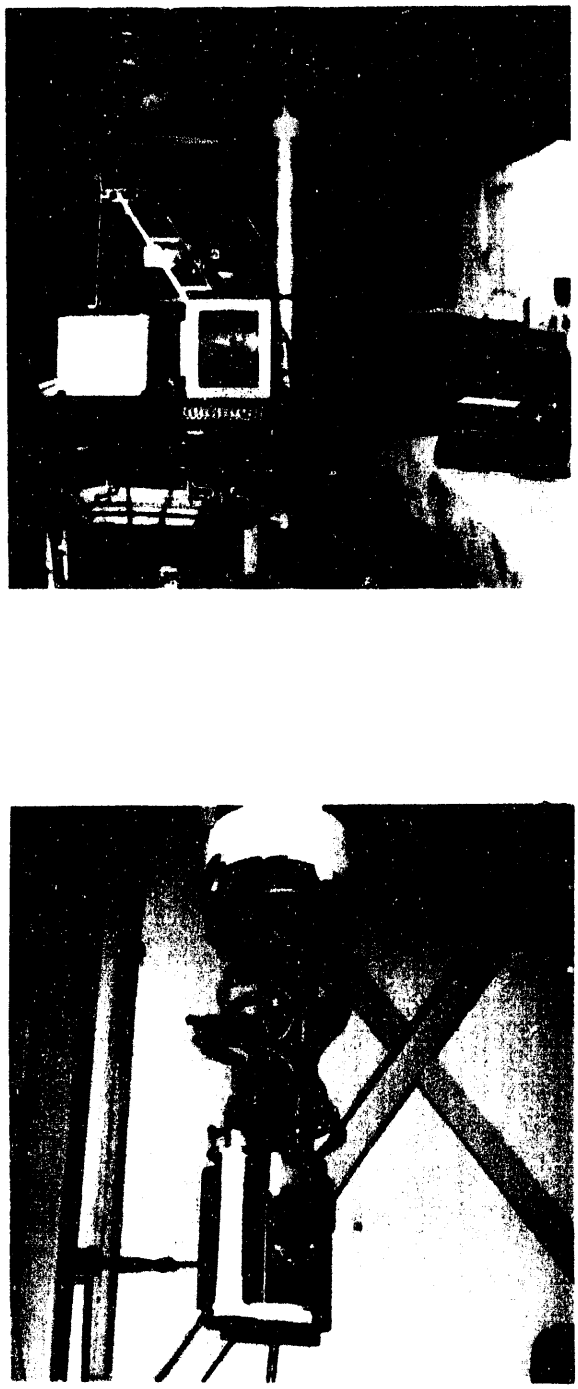

Figure 1. Photograph of upper and lower scanner assembly during laboratory testing.

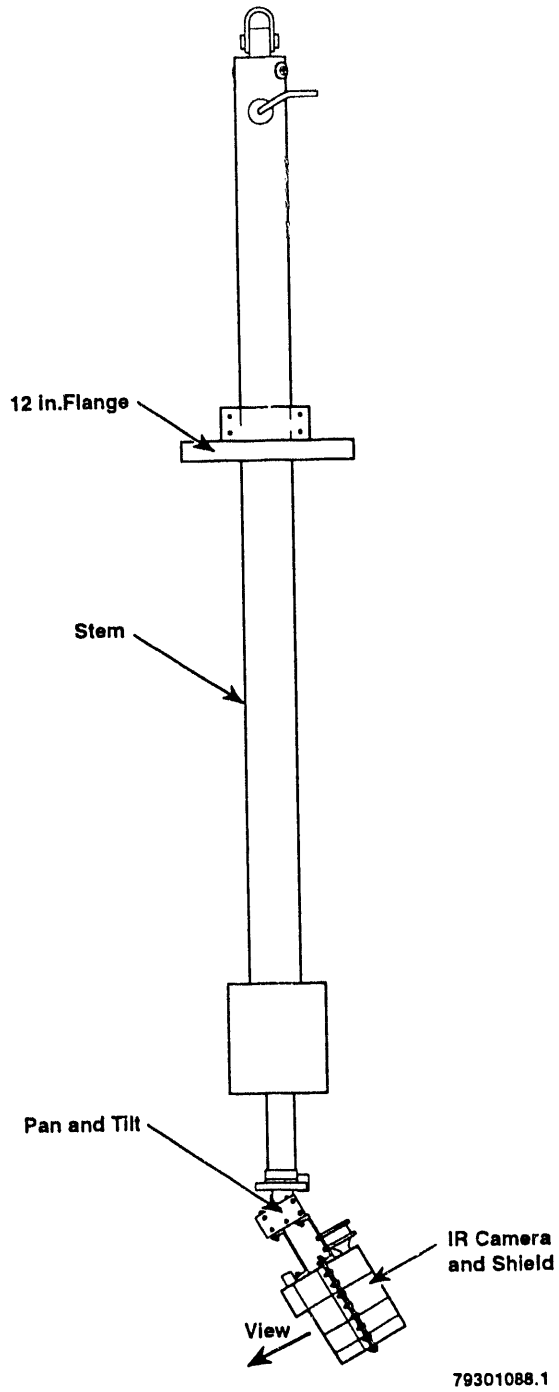

Figure 2. Drawing of scanner system.

Figures 1 and 2 show the IR scanner housing assembly. The lead shielding houses the IR scanner to protect the detectors and integrated circuits from radiation damage. Because the housing changes the normal ability of the IR imaging system to cool itself, and because contamination should not enter the housing, a purge gas system was designed for the IR imaging system. The purge gas flow rate for this enclosure was set to control the scanner temperature to vendor specifications.

The pan and tilt unit attaches the IR scanner to the stem, rotates the scanner 358 degrees, and tilts it 90 degrees from vertical to horizontal. The 4.85-m (16-ft) stem houses the hydraulic, gas, and electrical cables. The last 1 to 1.5 m (3 to 5 ft) of these cables extend out of the stem and wind and unwind around the pan and tilt unit when it positions the IR scanner. The assembly is supported on a 0.30 m (12-in.) flange by a split clamp welded to a 0.30-m (12-in.) flange plate. The length of the scanner assembly inserted into the tank is adjusted with the split clamp to match the length of the riser used to access the tank. Overall length of the assembly is approximately 5.8 m (19 ft); the approximate weight is 386 kg (850 lb).

Additional equipment to run the IR scanner includes the hydraulic pump for the pan and tilt unit, the control for pan and tilt operation, the nitrogen gas purge supply, and the computer control and video recording equipment for the IR imager. A plastic sleeve encased the entire assembly from the flange connection at the bottom of the stem. The lens and the purge gas filter was open to the atmosphere.

III. TEST LOCATION

Tank 241-S-110, a single-shell tank, was chosen for the infrared system deployment. The tank also contained a thermocouple "tree" for measuring the waste temperature for a rough comparison. This tank has an overburden of approximately 2.4 m (7.9 ft) of soil.
Tank 241-S-110, a 22.9-m (75-ft) diameter tank, is domed and is 11 m deep with approximately 3 m (9.8 ft) of waste. The surface of the waste is composed of salt cake. Surface readings of salt cake temperatures were required for the test. Tank 241-S-110 was used only to test the system; it contained no ferrocyanide or other chemicals of concern.

IV. DEPLOYMENT

All tank risers opened for the test required removal of old asbestos gasketing.

Before installation, three thermocouples were placed on the waste surface through 10.2-cm (4 in.) risers, 120 degrees apart and approximately 3 m (9.8-ft) from the tank wall. These thermocouples were not used as targets for the infrared system but to give representative temperatures for the surface. During installation of these thermocouples, personnel found old sludge measuring devices inside these risers. To gain access, the devices were secured by wires from their cables to the sides of the riser to allow for thermocouple insertion.

Although it took several days to line up the appropriate personnel and equipment to perform the infrared scan, the actual deployment and operation of the system took less than 8 hours. The IR scanner was deployed using a large crane. After a systems check, the system was lifted from horizontal to vertical then it was placed in a greenhouse surrounding the 30.5-cm (12-inch) riser close to the center of 241-S-110. The split clamp was adjusted to secure the stem at the correct elevation for scanning in this tank.

Upon insertion, the camera and pan and tilt unit extended about 50 cm (19.7 in.) into the dome space. To run the system, operators were required to work in bright sunlight, which made viewing the video difficult. Operators also were in anti-contamination clothing with two pair of gloves and a face mask with a supplied air line. The operators were required to operate the computer keyboard, pressure regulator for a purge gas unit and the joystick for the pan and tilt unit.

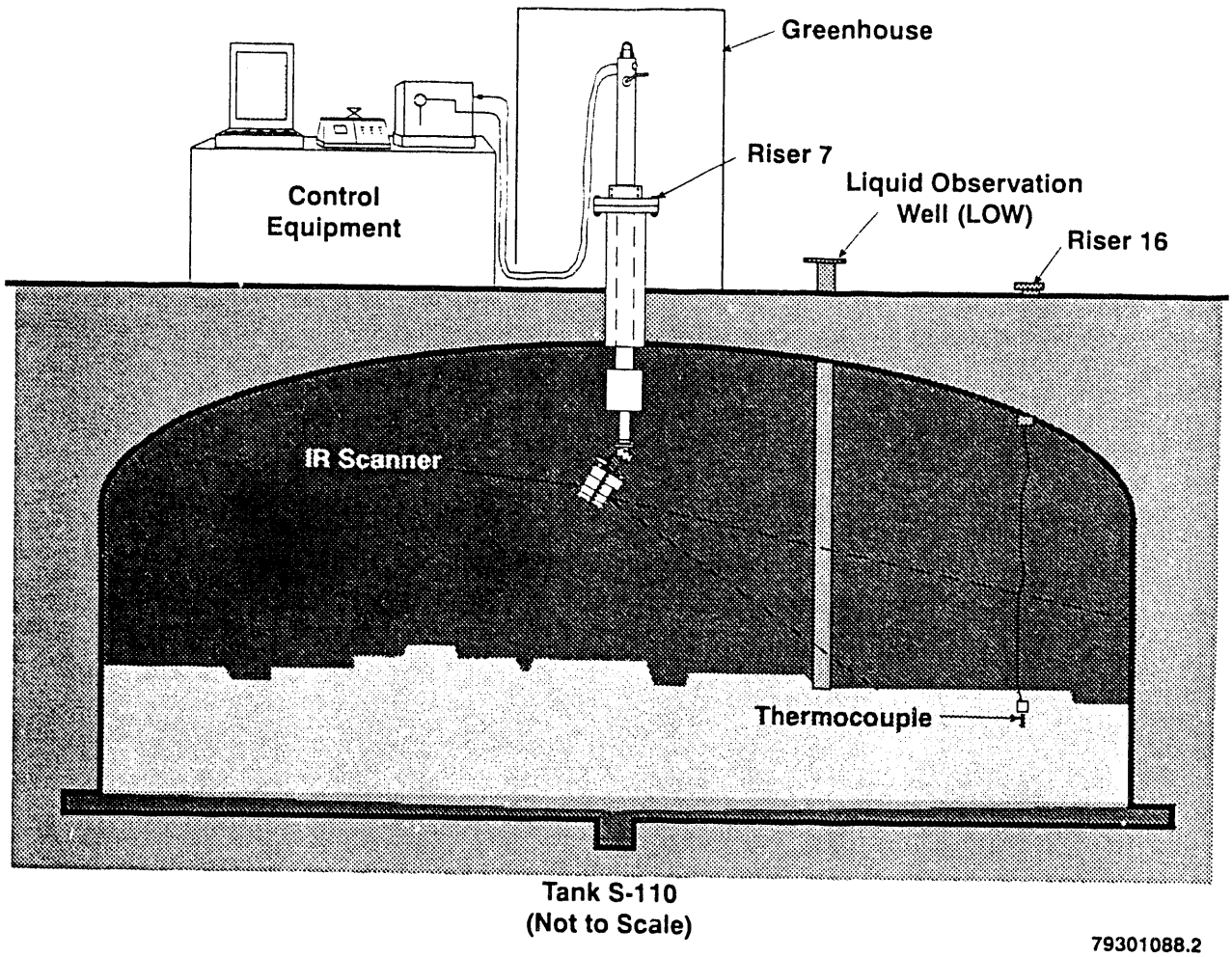

Figure 3. Schematic of tank with system inserted.

Once in the tank (see Figure 3), the camera was positioned for scanning with a hydraulic pan and tilt mechanism. The unit was panned at approximately 20 degree intervals and tilted from 20 degrees (facing the tank wall) to 90 degrees (facing the tank waste center) at 15 degree intervals. The entire scan took 1.5 hours. Installation required approximately 4 hours. Because of high afternoon winds, the camera assembly was left in the tank overnight and was removed the following day. The camera was pulled up into the pipe riser for overnight storage to reduce its total dose.

The entire system was bagged to prevent contamination (see Figure 2). This precluded the use of an original design to brace the stem inside the riser to keep the camera steady. Part of the test was to confirm the unit would provide clear pictures at the end of such a long stem.

V. RESULTS

The IR system arrangement did meet the procurement specification; however, the mass (combined with the small pan and tilt unit) did prove to be a problem. While the pictures were clear, the unit had a tendency to drift down. This drifting was slow and did not affect the analysis. And, although it was extensively tested before being installed in an actual tank, the bagging also interfered with the pan and tilt operation, causing

loss of pan position feedback. Rather than stopping the pan at the predetermined angle, the stopping point was judged by positioning landmarks on the video from the right side of the screen to the left. This was not as efficient and resulted in the scan taking longer and not being total; about 90 percent of the surface was scanned. Both of these factors were overcome, however, to provide a successful scan and yielded information to improve the system (when required) in performing more routine scans in the future. After the bagging was removed (see Figure 4), the entire system was found to be uncontaminated upon retrieval from the tank and the camera was brought back to the laboratory.

Figure 4. Photograph of system after removal from tank.

Based on the effectiveness of the shielding in the housing the maximum radiation dose rate for the scanner is estimated to be on the order of 20 R/hour. The maximum dose expected for the electronics as a result of the 3.5-hr period the scanner was in the tank vapor space would be approximately 70 R. The radiation dose rate at the opening of the riser was measured at 180 mR/hour; this is the dose rate estimated for the interior of the riser. Therefore, it is estimated that, for the time the IR scanner was in the riser, the dose would be 4 R. Thus the maximum expected total dose for the scanner electronics during the entire scan of Tank 241-S-110 is estimated to be 74 R. Based on the projected radiation tolerance of the IR scanner, another 13 scans could be performed with this equipment. If the efficiency of future in-tank procedures could be doubled, as many as 25 more tanks could be scanned with the IR equipment.

After the scan was complete and the system removed from the tank, a threaded fastener on the pan and tilt unit broke.

VI. CONCLUSIONS

The IR system has proven successful in providing a scan within a tank. To provide more reliability, the following activities are recommended.

1. Modifying the threaded fastener, which broke on the pan and tilt unit, to strengthen it and prevent fatigue breakage. A larger bolt is an solution.

2. Improving the design of the contamination bagging to be more precise thereby avoiding interference with the pan and tilt gears.

3. Reducing the mass of the lead box by shaving its corners, thus providing exactly 2.54 cm (1 in.) of shielding throughout (but no extra).

4. Using more automated deployment, such as a dedicated truck and lift mechanism rather than a crane.

The program for infrared scanner system use is currently on hold. There are no definite plans for temperature scanning other than using the system for anomaly investigation if one of the thermocouple trees, which is installed within the tank waste, indicates the necessity.

REFERENCES

1. Efferding, L. E., 1992, Infrared Scanner Parametric Test Using Heated Simulant Tank Waste, WHC-SA-1679-FP, Westinghouse Hanford Company, Richland, Washington.

2. Morford, R. J., 1991, "Waste Tank - Infrared Shielding," (Internal Memo to R. B. Mailhot, dated April 2, 1991), 22540RJM91-028CORR, Westinghouse Hanford Company, Richland, Washington.

3. Mailhot, R. B., Jr., and Morris, K. L. H., February, 1993, Infrared Imaging System for the Ferrocyanide Waste Tanks at the DOE's Hanford Site, WHC-SA-1689-FP, Westinghouse Hanford Company, Richland, Washington.

DISTRIBUTION

Number of copies		
ONSITE		
5	U.S. Department of Energy-Richland Operations Office	
	R. F. Christensen (5)	R3-72
29	Westinghouse Hanford Company	
	K. L. Morris (25)	H5-09
	Central Files	L8-15
	Information Release Administration (3)	A2-26

DATE
FILMED
6/10/94

END