S

SEP 27 2001

# ENGINEERING DATA TRANSMITTAL



1. EDT 630974

| | | |
|---|---|---|
| 2. To: (Receiving Organization) Distribution | 3. From: (Originating Organization) Design Engineering | 4. Related EDT No.: 630973 |
| 5. Proj./Prog./Dept./Div.: Design Engineering | 6. Design Authority/Design Agent/Cog. Engr.: RL Schlosser | 7. Purchase Order No.: N/A |
| 8. Originator Remarks: This document provides an estimate of the maximum pressure waste transfer encasement piping could experience following a on square inch leak in the primary pipe. | | 9. Equip./Component No.: N/A |
| | | 10. System/Bldg./Facility: 241G |
| | | 12. Major Assm. Dwg. No.: N/A |
| 11. Receiver Remarks: | 11A. Design Baseline Document? ☐ Yes ☒ No | 13. Permit/Permit Application No.: N/A |
| | | 14. Required Response Date: September 27,2001 |

15. DATA TRANSMITTED

| (A) Item No. | (B) Document/Drawing No. | (C) Sheet No. | (D) Rev. No. | (E) Title or Description of Data Transmitted | (F) Approval Designator | (G) Reason for Transmittal | (H) Originator Disposition | (I) Receiver Disposition |
|---|---|---|---|---|---|---|---|---|
| 1 | RPP-8778 | | 0 | Encasement Pressurization After Leaks in Primary Piping | SQ | 2 | 1 | 6 |

16. KEY

| Approval Designator (F) | Reason for Transmittal (G) | Disposition (H) & (I) |
|---|---|---|
| E, S, Q, D OR N/A (See WHC-CM-3-5, Sec. 12.7) | 1. Approval 2. Release 3. Information 4. Review 5. Post-Review 6. Dist. (Receipt Acknow. Required) | 1. Approved 2. Approved w/comment 3. Disapproved w/comment 4. Reviewed no/comment 5. Reviewed w/comment 6. Receipt acknowledged |

17. SIGNATURE/DISTRIBUTION (See Approval Designator for required signatures)

| (G) Reason | (H) Disp. | (J) Name | (K) Signature | (L) Date | (M) MSIN | (G) Reason | (H) Disp. | (J) Name | (K) Signature | (L) Date | (M) MSIN |
|---|---|---|---|---|---|---|---|---|---|---|---|
| | | Design Authority | | | | 1 | 1 | L. J. Julyk | | 9/26/01 | R3-83 |
| | | Design Agent | | | | 3 | 1 3 6 | J. P. Harris | | 9-26-01 | R1-49 |
| 1 | 1 | Cog. Eng. R. L. Schlosser | RL Schlosser | 9/26/01 | R3-83 | | | | | | |
| 1 | 1 | Cog. Mgr. A. H. Friberg | AH Friberg | 9/27/01 | R3-83 | | | | | | |
| 1 | 1 | QA J. M. Cannon | J Cannon | 9/27/01 | | | | | | | |
| 1 | 1 | Safety J. A. Ranschau | Jeff Ranschau | 9/27/01 | | | | | | | |
| | | Env. | | | | | | | | | |

| 18. | 19. | 20. | 21. DOE APPROVAL (if required) |
|---|---|---|---|
| RL Schlosser R. L. Schlosser 9/27/01 Signature of EDT Originator / Date | C. E. Grenard 9/27/01 C. E. Grenard Authorized Representative for Receiving Organization / Date | AH Friberg A. H. Friberg 9/27/01 Design Authority/ Cognizant Manager / Date | Ctrl No. N/A ☐ Approved ☐ Approved w/comments ☐ Disapproved w/comments |

# DISTRIBUTION SHEET

| To | From | Page 1 of 1 |
|---|---|---|
| Distribution | Design Engineering | Date September 27, 2001 |
| Project Title/Work Order | | EDT No. 630974 |
| RPP-8778, Rev. 0, Encasement Pressurization After Leaks in Primary Piping | | ECN No. |

| Name | MSIN | Text With All Attach. | Text Only | Attach./ Appendix Only | EDT/ECN Only |
|---|---|---|---|---|---|
| D. E. Bowers | S5-13 | X | | | |
| J. M. Cannon | S7-83 | X | | | |
| T. J. Conrads | R3-83 | H | | | |
| A. H. Friberg | R3-83 | X | | | |
| T. G. Goetz | R1-49 | X | | | |
| C. E. Graves | R3-83 | X | | | |
| C. E. Grenard | R3-83 | H | | | |
| J. M. Grigsby | R1-44 | X | | | |
| J. P. Harris | R1-49 | H | | | |
| L. J. Julyk | R3-83 | H | | | |
| T. C. Oten | S5-05 | X | | | |
| J. A. Ranschau | S7-86 | X | | | |
| R. W. Reed | R3-83 | X | | | |
| S. H. Rifaey | S7-90 | X | | | |
| R. L. Schlosser | R3-83 | H | | | |

# Encasement Pressurization After Leaks in Primary Piping

**Richard L. Schlosser and Larry J. Julyk**
CH2MHILL Hanford Group Incorporated
Richland, WA 99352
U.S. Department of Energy Contract DE-AC06-96RL13200

EDT/ECN: 630974 UC:
Org Code: 7G100 Charge Code: 110302
B&R Code: Total Pages: ~~196~~ ~~198~~ 198 9-27-01

Key Words: Encasement pipe, waste transfer systems, encasement pressure, presure drop analysis, RCSTS

Abstract: This report provides calculation of the estimated maximum pressure in waste transfer piping encasements for a postulated one square inch leak in the primary waste transfer line for supernate transfers.

TRADEMARK DISCLAIMER. Reference herein to any specific commercial product, process, or service by trade name, trademark, manufacturer, or otherwise, does not necessarily constitute or imply its endorsement, recommendation, or favoring by the United States Government or any agency thereof or its contractors or subcontractors.

Printed in the United States of America. To obtain copies of this document, contact: Document Control Services, P.O. Box 950, Mailstop H6-08, Richland WA 99352, Phone (509) 372-2420; Fax (509) 376-4989.

DATE: HANFORD RELEASE
STA: 4
SEP 27 2001
ID: 21

9-27-01
Release Approval Date Release Stamp

**Approved For Public Release**

RPP-8778
Revision 0

# Encasement Pressurization After Leaks in Primary Piping

Prepared by:

R. L. Schlosser and L. J. Julyk
CH2M HILL Hanford Group, Incorporated

Date Published
September 2001

Prepared for the U.S. Department of Energy
Assistant Secretary for Environmental Management

CH2MHILL
*Hanford Group, Inc.*

P. O. Box 1500
Richland, Washington

Contractor for the U.S. Department of Energy
Office of River Protection under Contract DE-AC06-99RL14047

Approved for Public Release; Further Dissemination Unlimited

**LEGAL DISCLAIMER**

This report was prepared as an account of work sponsored by an agency of the United States Government. Neither the United States Government nor any agency thereof, nor any of their employees, nor any of their contractors, subcontractors or their employees, makes any warranty, express or implied, or assumes any legal liability or responsibility for the accuracy, completeness, or any third party's use or the results of such use of any information, apparatus, product, or process disclosed, or represents that its use would not infringe privately owned rights. Reference herein to any specific commercial product, process, or service by trade name, trademark, manufacturer, or otherwise, does not necessarily constitute or imply its endorsement, recommendation, or favoring by the United States Government or any agency thereof or its contractors or subcontractors. The views and opinions of authors expressed herein do not necessarily state or reflect those of the United States Government or any agency thereof.

This report has been reproduced from the best available copy.
Available in paper copy and microfiche.

Available electronically at
http://www.doe.gov/bridge. Available for a processing fee to the U.S. Department of Energy and its contractors, in paper, from:
U.S. Department of Energy
Office of Scientific and Technical Information
P.O. Box 62
Oak Ridge, TN 37831-0062
phone: 865-576-8401
fax: 865-576-5728
email: reports@adonis.osti.gov(423) 576-8401

Available for sale to the public, in paper, from:
U.S. Department of Commerce
National Technical Information Service
5285 Port Royal Road
Springfield, VA 22161
Phone: 800-553-6847
fax: 703-605-6900
email: orders@ ntis.fedworld.gov
online ordering:
http://www.ntis.gov/ordering.htm

Printed in the United States of America

# Table of Contents

**INTRODUCTION** ..... 1
**BACKGROUND** ..... 1
**Design Piping Codes** ..... 2
**Transfer Lines SN-285 and WT-SNL-3150** ..... 2
**Transfer Lines SN-265, SN-267, and SN-609** ..... 3
**PREDICTED MAXIMUM ENCASEMENT PRESSURE** ..... 3
**CONSIDERATIONS** ..... 4
**Primary Piping Design** ..... 4
**Encasement Piping Design** ..... 5
RCSTS LINES ..... 5
INFRASTRUCTURE PIPING ..... 5
**Pump Pressure Source Limitation** ..... 6
**System Transient Response** ..... 6
**Environment** ..... 6
**FUTURE ACTIVITIES** ..... 6
**Confirmation of Flow Characteristics** ..... 6
**Establishment of Slurry Transport Characteristics** ..... 6
**Analysis** ..... 6
**Design Modification** ..... 7
**Acceptance of Analyzed Conditions** ..... 7
MAXIMUM CALCULATED PRESSURE LESS THAN OR EQUAL TO DESIGN PRESSURE ..... 7
MAXIMUM CALCULATED PRESSURE GREATER THAN DESIGN PRESSURE ..... 7
**CONCLUSIONS** ..... 10
**REFERENCES** ..... 11
**APPENDIX A: Analysis Model Development** ..... A-i
**APPENDIX B: RCSTS Maximum Pressure Analysis** ..... B-i
**APPENDIX C: Infrastructure Maximum Pressure Analysis** ..... C-i
**APPENDIX D: Independent Verification of Analysis Model** ..... D-i

This page left intentionally blank

# ENCASEMENT PRESSURIZATION AFTER LEAKS IN PRIMARY PIPING

## INTRODUCTION

Preliminary evaluations of existing tank farm waste transfer system encasement piping pressure response to flowing waste supernate following a large primary line leak indicate the potential to exceed current design conditions for the encasement piping system. The potential impact to design of the encasement piping systems is assessed in this paper. Based on the encasement pressure conditions reported, the existing encasement piping systems can perform their safety functions and are capable of withstanding the worst predicted pressure conditions for a large leak in the primary system. Testing is being conducted to validate parameters used in the completed preliminary supernate evaluations and to establish a basis for evaluation of slurry transfer leaks. The results of these tests will be incorporated into the evaluations after results become available.

This report provides the current status of encasement pressure analyses to determine suitable conditions for design of encasement piping within the tank farms waste transfer systems. This report provides results of preliminary evaluations, activities necessary to complete the evaluations, potential impacts on existing piping systems, and demonstration of adequacy of the existing encasement piping for withstanding higher pressure than the current design pressure without jeopardizing the safety function of the encasement piping systems to direct the flow of leaked waste from the primary line to a waste transfer-associated structure for detection (i.e., the encasement will direct waste to a pit leak detector before there is any significant release of waste to the environment).

## BACKGROUND

Two preliminary evaluations of existing encasement piping pressure due to a postulated leak in a primary transfer line were performed. These evaluations are a result of an initiative to determine methods and criteria for establishing the basis of encasement pressures that are required for the Double-Shell Tank Subsystem specifications.

A Westinghouse Model 2A-513-A1 pump (currently installed in Tank 241-SY-101) was modeled as the pumping source to bound all installed transfer pumps. Supernatant fluid transfer was modeled using a Specific Gravity of 1.3 and a viscosity of 1.2 centipoise. The model also evaluated cases with the transfer line open to a receiving tank and with the transfer line blocked at the receiver tank.

The recent report RPP-6759, *Determination of Secondary Encasement Pipe Design Pressure*, provides a conservative basis for establishing the required encasement pipe design pressure for new pipe-in-pipe waste transfer system piping. The analysis assumed a large leak occurred in the primary pipe and estimated the resulting maximum pressure in the encasement pipe under steady-state flow conditions in both the encasement pipe and the drain to the connecting pit where the leak detector is located. Because of the flow constriction from the encasement drain and the transfer line supports, the maximum pressure in the encasement pipe after a large leak in the primary piping is dependent on the location of the leak. Maximum encasement system pressure is predicted for leaks occurring remote from the drain location and minimum encasement pressure is predicted for leaks occurring near the drain location. For large primary line leaks, the maximum pressure could exceed the design pressure of the encasement segments between pits due to the flowing condition.

The analysis method does not address the transient flow condition associated with flooding the encasement. During transient conditions, the pump(s) supplying pressure to the system will operate at a higher flow rate and lower total discharge pressure, balancing with the pressure drop in the piping system through the primary system breach. Under this condition, the encasement offers little resistance to flow since its is not flooded.

## Design Piping Codes

Tank farm waste transfer systems designed prior to 1995 were designed, constructed, inspected, and tested to the requirements of ASME B31.1, *Power Piping*. Since 1995, waste transfer systems are designed, fabricated, constructed , and tested to the requirements of ASME B31.3, *Process Piping*.

Design under auspices of ASME B31.1 is governed by establishment of a design pressure that is not less than the maximum sustained operating pressure, including the effects of static head. Occasional loads are permitted to exceed the design condition by 15% for periods of less than 10% in any 24-hour period. Testing conditions are established at 150% of design pressure for hydrostatic testing, 120% to 150% of design pressure for pneumatic testing, and at operating pressure for initial service leak testing.

Design under auspices of ASME B31.3 is governed by establishment of a design pressure that is not less than the pressure at the most severe condition expected during service. Pressure is permitted to exceed the design condition by 20% at any one time, not to exceed 50 hours or a cumulative total of 500 hours/year provided suitable materials of construction are used, stresses do not exceed yield stress, and pressure does not exceed the test pressure of the system. Testing conditions are established at 150% of design pressure for hydrostatic testing or 110% of design pressure for pneumatic testing.

## Transfer Lines SN-285 and WT-SNL-3150

The encasement piping for SN-285 from the 241-SY-02A pump pit to the 241-SY-A valve pit was evaluated as a sample segment of infrastructure encasement piping. The WT-SNL-3150 (Replacement Cross-Site Transfer System) encasement piping from the 241-SY-A valve pit to the 244-A lift station was evaluated because of the application of more restrictive primary transfer line supports and anchors and the use of an initially pressurized encasement piping system.

Transfer Line SN-285 was installed as part of the SY tank farm construction to ASME B31.1 requirements. The transfer line is a buried pipe-in-pipe system approximately 340 feet long connecting the 241-SY-02A pump pit to the 241-SY-A valve pit. The encasement system was designed to 60 psig, with a test pressure of 90 psig. The encasement for line SN-285 drains through a 1½" diameter drain connection to the 241-SY-02A pump pit. This line uses primary line supports that provide little restriction to fluid flow.

Transfer Line WT-SNL-3150, installed by Project W-058 as part of the Replacement Cross-Site Transfer System (RCSTS), is a buried pipe-in-pipe system approximately 6.5 miles long connecting the 241-SY-A valve pit in the 200 West Area to the 244-A lift station in the 200 East Area of the Hanford Site. The transfer line was design to ASME B31.3 requirements. The encasement piping system consists of three separate segments between the 241-SY-A valve pit and the 6241-A diversion box (0.7 miles) with a rupture disk at the diversion box, between the 6241-A diversion box and the 6241-V vent station (2.0 miles) with rupture disks at both the diversion box and the vent station, and between the 6241-V vent station and the 244-A lift station (3.3 miles) with a rupture disk at the vent station. The encasement system was designed to 50 psig with a pneumatic test pressure of 55 psig. Primary pipe anchors and support guides incorporated in the Project W-058 design provide a significantly greater restriction under

encasement flow conditions than the primary pipe anchors and support guides incorporated in other transfer piping systems.

### Transfer Lines SN-265, SN-267, and SN-609

A comparable evaluation was performed for the transfer route through SN-265 from the 241-AW-05A pump pit to the 241-AW-A valve pit, through SN-267 from the 241-AW-A valve pit to the 241-AW-02A pump pit, through SN-609 from the 241-AW-02A pump pit to the 241-AP valve pit, through SN-640 to the 241-AP-A valve pit, and through LAW-702 from the 241-AP-A valve pit to the Waste Treatment Plant. Of these lines, SN-265, SN-267, and SN-609 are existing lines. The structures, systems and components, including routing and structure locations, beyond the 241-AP valve pit are all planned installations. This routing provides assessment for inter-farm infrastructure transfer line routing of SN-609 in addition to relatively short routings through the 241-AW tank farm.

Transfer line SN- 265 was installed as part of the AW tank farm construction to ASME B31.1 requirements. The transfer line is a buried pipe-in-pipe system approximately 240 feet long connecting the 241-AW-05A pump pit to the 241-AW-A valve pit. The encasement for line SN-265 drains through a 1½" diameter drain connection to the 241-AW-05A pump pit. The encasement was designed to 60 psig and tested to 90 psig.

Transfer line SN-267 was installed as part of the AW tank farm construction to ASME B31.1 requirements. The transfer line is a buried pipe-in-pipe system approximately 125 feet long connecting the 241-AW-A valve pit to the 241-AW-02A pump pit. The encasement for line SN-267 drains through a 1½" diameter drain connection to the 241-AW-02A pump pit. The encasement was designed to 60 psig and tested to 90 psig.

Transfer line SN-609 was installed as part of the AP tank farm construction to ASME B31.1 requirements. The transfer line is a buried pipe-in-pipe system approximately 760 feet long connecting the 241-AW-02A pump pit to the 241-AP valve pit. The encasement for line SN-609 drains through a 2" diameter drain connection to the 241-AP valve pit. The encasement was designed to 60 psig and tested to 90 psig.

Transfer lines SN-640 and LAW-702, the 241-AP-A valve pit, and the Waste Treatment Plant are planned future construction, therefore, detailed results for this portion of the second transfer line encasement evaluation are not presented.

## PREDICTED MAXIMUM ENCASEMENT PRESSURE

Applying the methodology of RPP-6759 to the SN-285, WT-SNL-3150, SN-265, SN-267, and SN-609 transfer line encasement piping systems, the preliminary analyses in the Attachment provide results for a one square inch leak opening as shown in Table 1.

For a leak in SN-285 with a blocked transfer route, the maximum encasement pressure would exceed the encasement piping 60 psig design pressure.

For a leak in WT-SNL-3150, the maximum encasement pressure would exceed the encasement piping 50 psig design and 55 psig test pressure for primary leaks occurring between the 241-SY-A valve pit and the 6241-A diversion box or between the 6241-V vent station and the 244-A lift station. Therefore, the safety function of the encasement piping might be jeopardized if the maximum pressure predicted by the analysis model could not be sustained by the encasement piping. The predicted encasement pressure

conditions are sensitive to the estimated flow resistance coefficients for the encasement anchors and support guides. A test program is being conducted to verify the estimated flow coefficients.

For leaks occurring in SN-265, SN-267, and SN-609 with a blocked transfer route, primary leaks would exceed the 60 psig encasement design pressure. For primary leaks occurring without blockage of the transfer line, the maximum pressure would not exceed the encasement design pressure.

**Table 1. Encasement Pressure from A Postulated 1 Square Inch Supernate Transfer Line Leak**

| Transfer Line | | Encasement Segment | Maximum Encasement Pressure (psig) | | | | | |
|---|---|---|---|---|---|---|---|---|
| | | | Open Transfer Route | | | Blocked Transfer Route | | |
| | | | Start | End | Dual | Start | End | Dual |
| RCSTS Cross-Site Transfer | SN-285 | 241-SY-02A to 241-SY-A | **54**[1] | -- | -- | **62**[1, 2] | -- | -- |
| | WT-SNL-3150 | 241-SY-A to 6241-A | 62[2] | **151**[1, 2] | 29[3] | 88[2] | **175**[1,2] | 29[3] |
| | WT-SNL-3150 | 6241-A to 6241-V | 19[3] | 120[2] | **19**[1, 3] | 44[3] | 166[2] | **33**[1, 3] |
| | WT-SNL-3150 | 6241-V to 244-A | **32**[1, 3] | 13[3] | 7[3] | **83**[1, 2] | 69[2] | 24[3] |
| Aw-105 to WTP A Complex Transfer | SN-265 | 241-AW-05A to 241-AW-A | **40**[1, 4] | -- | -- | **62**[1, 2, 4] | -- | -- |
| | SN-267 | 241-AW-A to 241-AW-02A | -- | **37**[1] | -- | -- | **62**[1, 2] | -- |
| | SN-609 | 241-AW-02A to 241-AP | -- | **34**[1, 4] | -- | -- | **63**[1, 2, 4] | -- |

[1] Design configuration shown in bold text
[2] Pressure in excess of design pressure
[3] Encasement pressure will rise to the rupture disk burst pressure, opening the flow path(s); then the pressure will decrease to the pressure shown.
[4] Two-inch diameter drain conservatively evaluated using the flow resistance of a 1-½" diameter drain.

## CONSIDERATIONS

### Primary Piping Design

RCSTS primary piping was constructed of three-inch Schedule 40S stainless steel pipe to ASTM A312 Grade TP 304L. The primary piping of the encased waste transfer lines are of welded construction with 100% radiographic nondestructive examination of circumferential weld joints. All RCSTS primary piping has been hydrostatically tested at 150% of the design pressure (1490 psig) based on use of a slurry booster pump, significantly greater than the shut-off head (367 psig @ 1.3 SG) of the supernatant transfer pump. These examinations and tests minimize the potential for a large leak, both in the pipe material and in heat-affected zones at joint welds. Primary piping for the RCSTS waste transfer lines is constructed from ductile stainless steel with an even lower likelihood of brittle failure causing a large leak.

Infrastructure primary piping was constructed of two-inch diameter and three-inch diameter Schedule 40 carbon steel pipe to either ASTM A53 Grade B or ASTM A106 Grade B. The primary piping of the encased waste transfer lines are of welded construction with 100% radiography nondestructive examination of circumferential weld joints. This primary piping is constructed from ductile carbon steel with a low likelihood of brittle failure causing a large leak. All infrastructure primary piping has been hydrostatically tested at 150% of design pressure (typically 275 psig).

## Encasement Piping Design

RCSTS LINES

The RCSTS piping was installed to the requirements of the ASME B31.3 process piping code. For the RCSTS encasement piping, minimum pipe wall thickness is specified as 0.191 inches for six-inch diameter pipe and 0.256 inches for twelve-inch diameter pipe located at RCSTS expansion loops. The pressure design capability of the RCSTS encasement piping has been analyzed in the Project W-058 calculation W058-P-032, *Process/Encasement Pipe Pressure Design (ASME B31.3)* as 980 psig for the six-inch diameter portions of the encasements and 683 psig for the twelve-inch diameter portions of the encasements.

In the same calculation, the fillet welded encasement end closure plates (¼-inch thick) were found to be capable of withstanding 591 psig, analyzed as simply supported. The closure plates are located within the transfer-associated structures.

Encasement leak detection connections are limited by design to a pressure of 675 psig by the use of ANSI B16.5 Class 300 flanges; these connections are also within the transfer-associated structures.

INFRASTRUCTURE PIPING

Infrastructure piping was installed to the requirements of ASME B31.1 for power piping. Infrastructure piping is Schedule 40 carbon steel pipe, either ASTM A53, Grade B or ASTM A106 Grade B. Infrastructure encasement piping within tank farms using four-inch and six-inch diameter piping has been evaluated in RPP-8777 to have a pressure design capability of at least 980 psig. The encasement piping uses up to twelve-inch diameter pipe with a pressure design capability of at least 683 psig as evaluated in RPP-8777.

The infrastructure encasement end full-penetration welded closure plates (¼-inch or $^3/_8$-inch thick) are capable of withstanding at least 450 psig, substituting the allowable stress from ASME B31.1 for the allowable stress from ASME B31.3 in the calculation W058-P-032. Closure plates for infrastructure encasements may be located inside or outside the transfer-associated structures and are a rigid installation bounded by the equation used in calculation W058-P-032.

Small-diameter drain and riser branch connections to the encasement pipe have been shown in RPP-8777 to have sufficient reinforcement based on ASME B31.1 requirements to provide a design pressure capability of more than 264 psig for connections to twelve-inch diameter encasement pipe, more than 389 psig for connections to six-inch diameter encasement pipe, and more than 490 psig for connections to four-inch diameter encasement pipe.

Encasement leak detection risers for infrastructure piping are limited by design to a pressure of 260 psig at 200 °F by the use of ANSI B16.5 Class 150 flanges, but these risers are located at the drain end of the encasements where the minimum pressure is applicable during encasement drain flow. Test riser

threaded joints have been shown in RPP-8777 to have a pressure design capability greater than 610 psig. Both the leak detection risers and the test risers terminate above grade.

### Pump Pressure Source Limitation

Waste transfer pump discharge head limits the maximum pressure that can be seen by the encasement piping. No installed transfer pump provides pressure higher than the discharge pressure of the Westinghouse Model 2A-513-A1 pump (367 psig at shutoff head for 1.3 Specific Gravity fluid). This pressure is less than the pressure design capability of all portions of the RCSTS and infrastructure encasement piping systems except for infrastructure leak detection riser flanges and branch connections to twelve-inch diameter encasement pipe.

### System Transient Response

The RCSTS will undergo a flooding transient with the pump running out on its performance curve. The 6-inch diameter encasement piping contains approximately one gallon of fluid per foot of length. Therefore, it will take approximately 18 minutes to flood the segment from the SY-A valve pit to the 6241-A Diversion Box, 45 minutes to flood the segment from the 6241-A diversion box to the 6241-V vent station and 75 minutes to flood the segment from the 6241-V vent station to the 244-A lift station.. During this time, the environmental leak detection system will be in alarm condition.

### Environment

All encasement systems are maintained internally dry, minimizing the potential for deleterious effects of corrosion. The RCSTS encasement piping is externally protected with epoxy coating, insulated and provided with a fiberglass-reinforced polyester resin insulation jacket, isolating the encasement from external corrosion. The infrastructure encasement piping was coated with tar, wrapped, and provided with cathodic protection to minimize external corrosion. Therefore, encasement degradation due to environment will not have a significant effect on the ability of the encasement piping to satisfy its safety functions.

## FUTURE ACTIVITIES

### Confirmation of Flow Characteristics

Since the results of the RCSTS analyses are highly dependent on the flow resistance of primary piping support guides and pipe anchors, tests are being performed to provide flow coefficients for these portions of the design.

### Establishment of Slurry Transport Characteristics

Additional testing is being performed to determine appropriate fluid characteristics for application to the flow of slurry mixtures. Due to the addition of a booster pump to the RCSTS flow path for slurry transfers, it is anticipated that the WT-SLL-3160 encasement system from the 6241-A diversion box to the 244-A lift station will have greater maximum pressures than those predicted for supernate transfers through WT-SNL-3150.

### Analysis

Results of the flow testing will be incorporated in analyses to obtain new design conditions for the existing piping and establish criteria for new piping systems.

When results of slurry property testing are available, they will be applied to evaluation of the WT-SLL-3160 slurry transfer line encasement system.

## Design Modification

For existing systems that are not shown to be acceptable based on the original design code, it may be possible to provide system design modifications that either eliminate or reduce the impact of the maximum calculated pressure on existing piping systems. As an example, the encasement system for WT-SNL-3150 incorporates closed drain connections at the SY valve pit and the 244-A Lift station. Addition of a second rupture disk to these encasement drains would significantly reduce the maximum calculated encasement pressure as summarized in Table 1.

## Acceptance of Analyzed Conditions

MAXIMUM CALCULATED PRESSURE LESS THAN OR EQUAL TO DESIGN PRESSURE

Encasement systems that have a calculated pressure less than the system design pressure require no further actions There is no change to the compliant design.

The maximum calculated pressure for the RCSTS encasement piping system from the diversion box to the vent station meets this condition, with the calculated maximum steady state pressure below the design pressure of the system. Pressure relief through rupture disks at the diversion box and vent station will limit the maximum encasement pressure to the setting level of the pressure relief devices.

MAXIMUM CALCULATED PRESSURE GREATER THAN DESIGN PRESSURE

Encasement systems that have a calculated pressure greater than the design pressure should be evaluated to the methods of the applicable design code. If the applicable allowances are satisfied, no further action is required.

ASME B31.1 Piping Systems

Since pressurization of the encasement is a result of a primary system failure the condition may be addressed as "occasional loads and transients of pressure and temperature" as allowed by ASME B31.1 Paragraph 102.2.4. If the conditions are met, the system is acceptable.

Based on the calculated maximum pressure and the pressure capability of the components, lines SN-265, SN-267, SN-285, and SN-609 comply with the requirements. In RPP-8777, the piping, threaded connections, and branch connections are shown to have a pressure capability within limits of allowable stress, without exceeding pressure ratings of rated system components or utilizing the ASME B31.1 Paragraph 102.2.4 conditions for exceeding maximum allowable stress.

If the increased pressure did not meet ASME B31.1 Paragraph 102.2.4 requirements, the following actions are provided as non-mandatory guidance in ASME B31.1 Appendix V, Paragraph V-12.1.1 for re-rating and could provide a basis for the Department of Energy to accept the new condition:

- *(A) A design analysis shall be performed to demonstrate that the piping system meets the requirements of the Code at the new design conditions.* For an encasement pipe, normal operation is without primary leakage, therefore, pressurization after a leak is governed by ASME B31.1 Paragraph 102.2.4. Analysis must show that stress levels are within the limits established

by the code. If the system temperature is changed, the impact on expansion and pipe movement must also be considered.

- *(B) The condition of the piping system and support/restraint scheme shall be determined by field inspections and the examination of maintenance records, manufacturer's certifications, and/or other available information to ensure conformance with the Code requirements for the new design conditions.* Due to inaccessibility of the buried piping system, field inspection of the system cannot be performed. Therefore, condition of the system is based on construction records, tests of system integrity, and inspection of accessible portions of the system.

- *(C) Necessary repairs, replacements, or alterations to the piping system are made to conform with the requirements prescribed in (A) and (B) above.* This requires that any component replacements, system repairs, or design modifications necessary to meet the new condition be completed.

- *(D) The system has been leak tested to a pressure equal to or greater than that required by the Code for a new piping system at the new design conditions.* Since the leak test pressure may exceed the original test pressure, the Department of Energy may accept the original system pressure test as an initial service test as an "Owner" accepted risk. For encasement systems, the requirements of ASME B31.1 Paragraph 102.2.2.4 will probably not require retest of the system.

- *(E) The rate of pressure and temperature increase to the higher maximum allowable operating conditions shall be gradual so as to allow sufficient time for periodic observations of the piping system movements and leak tightness.* This condition cannot be readily satisfied since the piping system is inaccessible and the new condition for the encasement occurs only after a primary system failure, not a normal operating condition.

- *(F) Records of investigations, work performed, and pressure tests conducted in re-rating the piping systems shall be preserved for the service life of the piping systems.* All analyses, inspections, and modifications must be documented and records retained. This information provides the basis for acceptance of the new conditions.

- *(G) All safety valves, relief valves, and other pressure relieving devices must be examined, and re-certified for the new pressure/temperature design conditions. Capacity of relieving equipment shall be investigated if the design pressure and/or temperature are changed in re-rating a piping system.* For most encasement systems, there are no pressure relieving devices, therefore, it is unlikely that this re-rating requirement will require any actions.

ASME B31.3 Piping Systems

Since pressurization of the encasement is a result of a primary system failure the condition may be addressed as a pressure variation as defined in ASME B31.3 Paragraph 302.2.4. If the requirements of ASME B31.3 Paragraph 302.2.4 are satisfied for piping constructed to ASME B31.3 requirements, the piping system is acceptable and no additional actions are required.

The maximum calculated pressure exceeds the test pressure for the RCSTS encasement piping system segments between the SY valve pit and diversion box and between the vent station and lift station. Therefore, the current design does not satisfy the testing requirement of ASME B31.3 Paragraph 302.2.4, although other conditions are satisfied without exceeding pressure ratings of system components or utilizing the ASME B31.3 Paragraph 302.2.4 conditions for exceeding maximum allowable stress.

If the requirements of ASME B31.3 Paragraph 302.2.4 are not met, the system may be redesigned or the Department of Energy could accept the condition as the owner of the facility. In order to accept the condition, it would be necessary to develop an acceptable process to permit continued use of the system. ASME B31.3 does not include operations in its scope and provides no guidance for changed design conditions. The chemical process industry has developed API 570, *Piping Inspection Code* to provide rules for re-rating of piping systems constructed to ASME B31.3 requirements. The API 570 re-rating rules are very similar to those found in ASME B31.1. The requirements of API 570 Paragraph 8.3 include:

- *a. Calculations performed by the piping engineer or the inspector.* For an encasement pipe, normal operation is without primary leakage, therefore, pressurization after a leak is governed by ASME B31.3 Paragraph 302.2.4. Analysis must show that stress levels are within the limits established by the code. If the system temperature is changed, the impact on expansion and pipe movement must also be considered. For self-limiting conditions, allowable stresses may be exceeded by 20% without requiring approval of the Department of Energy.

- *b. All ratings shall be established in accordance with the requirements of the code to which the piping system was built or by computation using the appropriate methods in the latest edition of the applicable code.* This condition is satisfied by use of ASME B31.3.

- *c. Current inspection records verify that the piping system is satisfactory for the proposed service conditions and that the appropriate corrosion allowance is provided.* Due to inaccessibility of the buried piping system, inspection records for the system would have to be based on construction records, tests of system integrity, inspection of accessible portions of the system, and knowledge of the operational history including fluid chemistry.

- *d. Rerated piping systems shall be leak tested in accordance with the code to which the piping system was built or the latest edition of the applicable code for the new service conditions, unless documented records indicate a previous leak test was performed a greater than or equal to the test pressure for the new condition. An increase in the rating temperature that does not affect allowable tensile stress does not require a leak test.* This condition cannot be satisfied since the piping system is inaccessible for inspection during a leak test. There are two alternative that the Department of Energy might accept in lieu of pressure testing in accordance with ASME B31.3 — pressure decay testing as allowed under ASME Section 11 or acceptance of the existing test as indicative of system suitability without additional testing as allowed under ASME B31.1 by initial service test.

- *e. The piping system is checked to affirm that the required pressure relieving devices are present, are set at the appropriate pressure, and have the appropriate relieving capacity at set pressure.* For most encasement systems, there are no pressure relieving devices, therefore, it is unlikely that this re-rating requirement will require any actions. The RCSTS is provided with rupture disks for pressure relief which may require replacement for a change in design conditions.

- *f. The piping system rerating is acceptable to the inspector or piping engineer.* The re-rated conditions are acceptable from an engineering perspective if the calculations show acceptability of the new conditions, piping component pressure ratings are acceptable, and appropriate changes to pressure relieving devices are made. Since no change to the design temperature is made, there are no impacts due to pipe flexibility or temperature-dependent material properties.

- *g. All piping component in the system (such as valves, flanges, bolts, gaskets, packing, and expansion joints) are adequate for the new combination of pressure and temperature.*

- *h. Piping flexibility is adequate for design temperature changes.* Since no change in the design temperature is anticipated, this requirement does not affect the re-rating of the encasement piping.

- *i. Appropriate engineering records are updated.* All analyses, inspections, and modifications must be documented and records retained. This information provides the basis for acceptance of the new conditions.

- *j. A decrease in minimum operating temperature is justified, if required by the applicable code.* Since no change in the design temperature is anticipated, this requirement does not affect the re-rating of the encasement piping.

## CONCLUSIONS

Supernate transfers with existing transfer pumps can continue with no added risk. Based on the estimated maximum pressure for each of the encasement piping systems, component pressure ratings and maximum allowable stresses will not be exceeded.

The conservatively estimated maximum encasement pressure of 61 psig for infrastructure piping is well below the controlling allowable pressure of 260 psig (based on leak detection riser flange ratings) for the encasement piping systems. This condition is permitted by ASME B31.1 Paragraph 102.2.4, which allows system pressure and stress levels higher than design for occasional loads. Since the presence of a primary leak requires shutdown of the transfer pump, the predicted encasement pressure will not be sustained and can be treated as an occasional load.

The estimated maximum pressure for the RCSTS piping of 172 psig for encasement piping is well below the controlling allowable pressure of 590 psig for the encasement piping system. The maximum steady-state pressure estimated for the encasement piping after a primary leak does not impact the encasement piping system's ability to perform its safety function. Upon any leakage from a primary transfer line, it is typical that the line is taken out of service and abandoned. In addition, the likelihood of a large break in the primary pipe for a supernatant transfer is reduced because of the available pressure head from the transfer pumps. The shutoff pressure of the bounding Westinghouse Model 2A-513-A1 pump is less than one-third of the 1,490 psig design pressure for the primary pipe. The primary pipe is made of 304L stainless steel, which is ductile and not prone to brittle failure. The primary pipe also had 100% radiographic weld inspection, which is more than the inspection required by ASME B31.3. Thus, the primary piping is a robust piping system and is not likely to fail, particularly at the lower demand conditions associated with supernate transfers.

The infrastructure and RCSTS encasement piping systems are capable of withstanding the predicted maximum pressure from the Westinghouse Model 2A-513-A1 pump and all other installed waste transfer pumps in the event of a large leak in the primary pipe during supernate waste transfers. Therefore, the infrastructure and RCSTS encasement piping systems would be able to perform their safety function to direct the flow of leaked waste from the primary line to a waste transfer-associated structure for detection before there is any significant release of waste to the environment.

RCSTS encasement maximum pressure can be significantly reduced if it is feasible to add a second rupture disk drain at the SY-A valve pit and at the 244-A lift station. Modification of the system to

include the second relief point on all encasement segments would reduce the maximum pressure to less than the design condition for these encasement segments.

## REFERENCES

API 570, 1993, *Piping Inspection Code, Inspection, Repair, Alteration, and Rerating of In-Service Piping Systems*, American Petroleum Institute.

ASME B31.1, 1998, *Power Piping*, American Society of Mechanical Engineers, New York, New York.

ASME B31.3, 1999, *Process Piping*, American Society of Mechanical Engineers, New York, New York.

ASTM A53, 1990, *Pipe, Steel, Black and Hot-Dipped, Zinc-Coated Welded and Seamless*, American Society for Testing and Materials, West Conshohocken, Pennsylvania.

RPP-6759, 2000, *Determination of Secondary Encasement Pipe Design Pressure*, Revision 0, CH2M HILL Hanford Group, Inc., Richland, Washington.

RPP-8777, 2001, *Waste Transfer Encasement Pressure Capability*, Revision 0, CH2M HILL Hanford Group, Inc., Richland, Washington.

W-058-C1, 1998, *Technical Requirements Buried Pipeline for Replacement of the Cross Site Transfer System*, Rev. 1, Fluor Daniel Northwest for Lockheed Martin Hanford Corporation, Richland, Washington.

W058-P-032, 1995, *Process/Encasement Pipe Pressure Design (ASME B31.3)*, ICF Kaiser Engineers Hanford, Richland, Washington.

This page left intentionally blank

# APPENDIX A

# ANALYSIS MODEL DEVELOPMENT

---

*Calculations contained herein were produced in Mathcad 2001 Professional. Mathcad is a registered trademark of MathSoft, Inc. of Cambridge, Massachusetts.*

This page intentionally left blank

## CONTENTS

1.0 PROBLEM STATEMENT . . . . . A-1

2.0 APPROACH . . . . . A-1

3.0 ASSUMPTIONS . . . . . A-2

4.0 SUMMARY RESULTS . . . . . A-3

5.0 REFERENCES . . . . . A-3

6.0 ANALYSIS . . . . . A-5
- 6.1 Waste Properties . . . . . A-5
- 6.2 Pump Characteristics . . . . . A-6
- 6.3 Darcy Friction Factor . . . . . A-10
- 6.4 Pipe Parameters . . . . . A-11
- 6.5 K-Resistance Loss Factors . . . . . A-12
  - 6.5.1 W-058 Pipe Sliding Support. . . . . A-15
  - 6.5.2 W-058 Guide Support. . . . . A-17
  - 6.5.3 W-058 Pipe Anchor . . . . . A-20
  - 6.5.4 W-314 and Existing Pipeline Pipe Supports. . . . . A-23
  - 6.5.5 W-314 and Existing Pipeline Pipe Guides . . . . . A-25
  - 6.5.6 W-314 Pipe Anchor . . . . . A-28
  - 6.5.7 Loss at Drain Exit. . . . . A-31
  - 6.5.8 Loss at Break. . . . . A-31
  - 6.5.9 Spacing of Anchors and Guides. . . . . A-35
  - 6.5.10 Equivalent Pipe Length for Drain Pipe and Rupture Disk. . . . A-36
- 6.6 Elevation at Break . . . . . A-37

This page intentionally left blank

## LIST OF TABLES

Table 1 Summary of Predicted Maximum Encasement Pressure (psig) for Postulated 1-in$^2$ Primary Pipe Break During Supernatant Waste Transfers in RCSTS and Selected 200 East Area Transfer Route . . . . . A-4

## LIST OF FIGURES

Figure 1a Transfer Pipe Layout Schematic . . . . . A-1

Figure 1b Replacement Cross-Site Transfer System (RCSTS) Pipeline Elevations (ft) and Equivalent Pipe Lengths (ft) . . . . . A-2

Figure 2a SY-Farm Transfer Pump Head Curves. . . . . A-8

Figure 2b SY-Farm Transfer Pump Discharge Pressure Curves for Waste Density of 1 and 1.5 kg/L . . . . . A-8

Figure 2c Cross-Site Booster Pump Head Curve . . . . . A-9

Figure 2d Cross-Site Booster Pump Discharge Pressure Curves for Waste Density of 1, 1.3 and 1.5 kg/L . . . . . A-9

Figure 3a Correction Factor $K_L$ vs. $\alpha = L/D_o$ Ratio. . . . . A-13

Figure 3b K-Resistance Factor for Thick-edged (Long) Orifice ($\beta = 0.9$). . . . . A-13

Figure 3c K-Resistance Factor for Thick-edged (Long) Orifice ($\beta = 0.75$). . . . . A-14

Figure 3d K-Resistance Factor for Thick-edged (Long) Orifice ($\beta = 0.5$). . . . . A-14

Figure 4 W-058 3x12 Sliding Support at Pipe Bends and Expansion Loops. (PermAlert Drawing No. 95-597-EA, Sheet 4). . . . . A-15

Figure 5a W-058 3x6 Guide Support at 12-Foot Spacing. (PermAlert Drawing No. 95-597-EA, Sheet 4) . . . . . A-17

Figure 5b Geometry Check. . . . . A-18

Figure 6 W-058 Pipe Anchor at (Average) 550-Foot Spacing. (PermAlert Drawing No. 95-597-EA, Sheet 4). . . . . A-20

Figure 7 W-314 Pipe Support (H-14-102662) and Existing Pipeline Pipe Support (H-2-70550). . . . . A-23

## LIST OF FIGURES (CONTINUED)

Figure 8 W-314 Encased Pipe Guide. (H-14-102662) . . . . . A-25

Figure 9a W-314 Encased Pipe Anchor. (H-14-102662) . . . . . A-28

Figure 9b W-314 Encased Pipe Anchor. (H-14-102662) . . . . . A-29

**CH2MHILL Hanford Group, Inc.**

**EVALUATION ANALYSIS**

Calc. No. RPP-LJJ-005
Revision: 0
Page No. 1 of 37

Client: CH2M Hill Hanford Group, Inc.
Subject: Secondary Encasement Pipe Pressure Due to Primary Pipe Break in Waste Tank Cross-Site Transfer Piping System
Location: 200 Area - Hanford Site, Richland, Washington

WO/Job No. _____
Date: 9/12/2001 By: L. J. Julyk
Checked: 9/25/01 By: R. Schlosser
Revised: _____ By: _____

## ANALYSIS MODEL DEVELOPMENT

### 1.0 PROBLEM STATEMENT

Determine maximum pressure in secondary encasement pipe sections for postulated break in primary pipe during supernatant waste transfer operations through the Replacement Cross-site Transfer System (RCSTS) and a selected 200 East Area transfer route to the Waste Treatment Plant (WTP).

### 2.0 APPROACH

Basic pipeline hydraulic principles are applied to determine the maximum steady-state pressure in the secondary encasement pipe sections for a postulated break in the primary pipe during waste transfer operations. The resulting nonlinear system of equations that model the hydraulic conditions are solved using Mathcad 2001 Professional (Mathcad is a registered trademark of MathSoft, Inc. of Cambridge, Massachusetts). Head losses due to friction, exit losses at drains and at the pipe break are calculated. In addition, losses due to sudden contractions or enlargements from the primary pipe supports in the annulus region and changes in flow area from the annulus to drain pipe(s) are estimated using an equivalent hydraulic diameter approach to determine the K-resistance loss factors (see Blevins 1984). The conservation of mass (continuity) and energy (Bernoulli theorem) are applied between nodes (as numbered in Figure 1) and at the pipe break location plus a characteristic pump head relation is modeled to form the nonlinear system of equations that govern the steady-state flow resulting from a primary pipe break. The pressure in the primary pipe and encasement pipe with a break in the primary pipe are calculated through an iterative process. Initially the system flow rate is a constant as determined by the pump characteristics and system line losses. When the break occurs, the pump flow rate will increase depending on the location and size of the break. The increase in flow rate will cause both a pump head decrease and an increase in frictional line losses until a new equilibrium condition is reached.

**Figure 1a. Transfer Pipe Layout Schematic.**

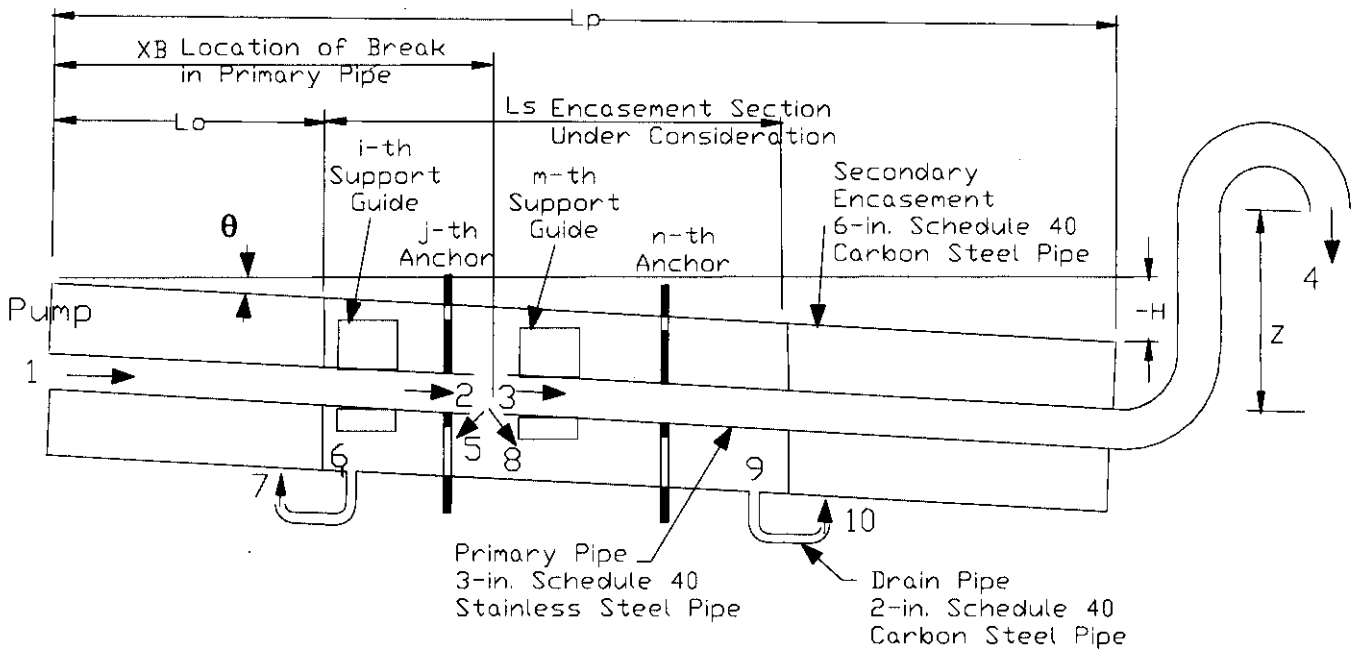

**CH2MHILL Hanford Group, Inc.**

**EVALUATION ANALYSIS**



Client: CH2M Hill Hanford Group, Inc. WO/Job No. _____
Subject: Secondary Encasement Pipe Pressure Due to Primary Pipe Break in Waste Tank Cross-Site Transfer Piping System
Location: 200 Area - Hanford Site, Richland, Washington

Date: 9/12/2001 By: L. J. Julyk
Checked: 9/25/01 By: M Schlosser
Revised: _____ By: _____

## 3.0 ASSUMPTIONS

To bound the maximum pressure in the secondary encasement pipe sections the following conservative assumptions are applied in simplified model of pipelines.

1. Assume maximum waste bulk density during supernatant waste transfer of 1.3 kg/L. (Expected to vary from 1.1 to 1.3 kg/L).
2. For supernatant waste transfer apply SY-101 new transfer pump (Canned Motor Westinghouse Pump Model 2A-513-A1) characteristic pump head curve and for slurry transfers apply SY-101 new transfer pump (Canned Motor Westinghouse Pump Model 2A-513-A1) in series with booster pump (3x2x8.75 MSE 9 Stage Sulzer Bingham Pump) located at Diversion Box 6241-A. (Analysis of slurry transfer not considered at this time but is planned).
3. Assume pipe roughness values of 5 mils due to general corrosion in carbon steel secondary encasement pipe and in drain pipe(s) and a pipe roughness value of 2 mils in the stainless steel primary pipe.
4. Assume a waste transfer temperature of 60 °C. (Expected to vary from 40 to 60 °C for supernatant waste transfers.)
5. Assume that pressure losses due to guide supports and anchors can be approximated (first order approximation) from corresponding pressure losses due to thick-edged (long) orifice plates with equivalent flow area. (This assumption will be verified through planned mockup flow test; preliminary results are favorable.)
6. Assume encasement pipe 60-psig rupture disk(s) are open with an equivalent 2-inch diameter flow path.
7. Assume rupture disk assembly as a pressure drop equivalent to 75 pipe diameters (i.e. L/D = 75) per manufacture's data (BS&B 2001).
8. Assumed elevation and equivalent primary pipe lengths for the RCSTS pipeline route are summarized in Figure 1b from Calculation W058-P-048.
9. For supernatant waste transfers in the 200 East Area, consider as representative the transfer route from AW-105 to WTP. (This route includes existing pipeline and proposed W314 pipeline to WTP.)
10. Conservatively evaluate existing and proposed W-314 pipelines within 200 East Area assuming 1-1/2 inch diameter drains. (Nominal drain size is typically 1-1/2 or 2 inches.)
11. Assume postulated primary pipe break size of 10 in. by 0.10 in. (1 in$^2$ flow area large break).

**Figure 1b. Replacement Cross-Site Transfer System (RCSTS) Pipeline Elevations (ft) and Equivalent Pipe Lengths (ft).**

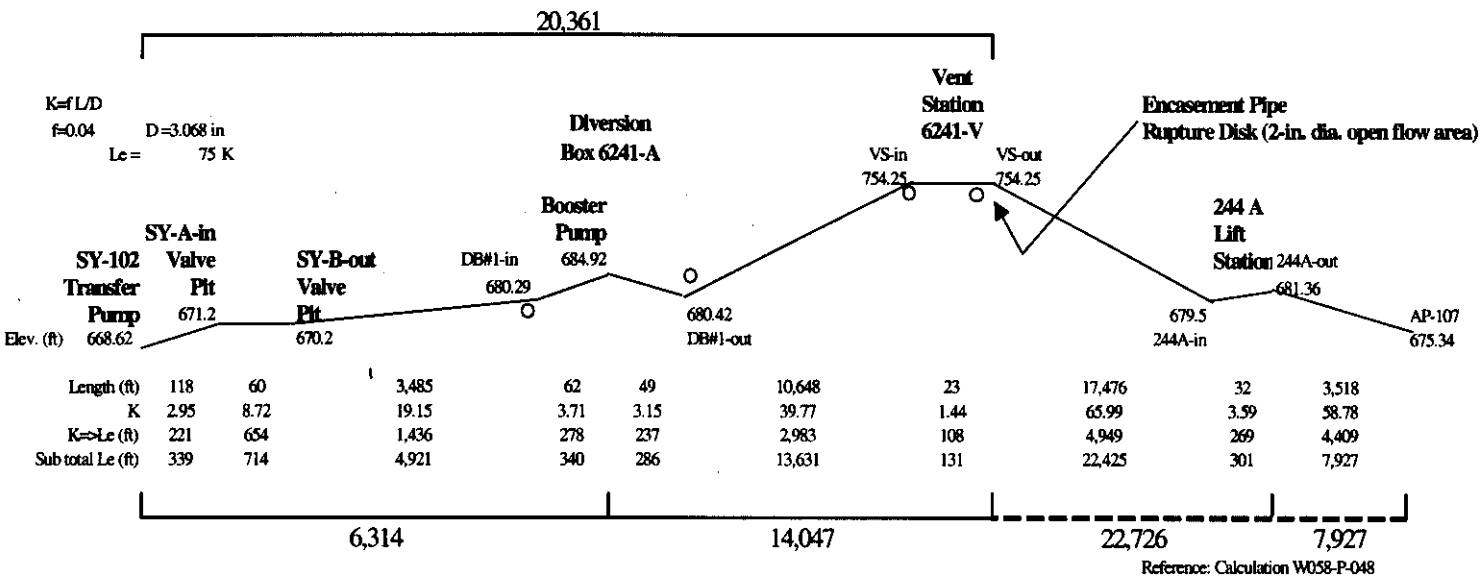


Reference: Calculation W058-P-048

## 4.0 SUMMARY RESULTS

The predicted maximum steady-state pressure in the secondary encasement pipe is a function of the location of the primary pipe break relative to the pump If the encasement section between pits is located some distance from the pump ($L_o$ > 0 ft) then the maximum encasement pressure resulting from a primary pipe break within this section will decrease as $L_o$ increases due to head losses prior to the break location. The resulting estimated maximum steady-state pressures in the secondary encasement pipe sections in the RCSTS and a selected 200 East Area due to a postulated break in the primary pipe at various locations is summarized in Table 1 for supernatant waste transfers. Note that a dual drain configuration would significantly reduce the predicted encasement pressure for a postulated primary pipe break. In cases where there is a dual drain relief for the RCSTS encasement, the maximum encasement pressure is equal to the rupture disk setting of 60 psig.

## 5.0 REFERENCES

Blevins, R. D., 1984, *Applied Fluid Dynamics Handbook*, Van Nostrand Reinhold Company Inc., New York, New York.

BS&B, 2001, "BS&B Rupture Disk Sizing Use Simplifu=ied Flow Formulas," *BS&B Pressure Relief and Explosion Venting Technology Catalog*,

Calaculation W058-P-048, Rev. 0, 11/21/96, Kaiser Engineers Hanford, Richland, Washington.

CRANE, 1988, *Flow of Fluids through Valves, Fittings, and Pipe, Technical Paper No. 410*, Crane Co., Chicago Illinois.

Estey, S. D. and T. A. Hu, 1998, *Flow Velocity Analysis for Avoidance of Solids Deposition During Transport of Hanford Tank Waste Slurries*, HNF-2728, Rev. 0, Lockheed Martin Hanford Corporation, Richland, Washington.

Estey, S. D, 2000, "Alternatives Generation and Analysis for Waste Feed Delivery Transfer Pump Discharge Pressure: Hanford Tank Waste Physical Property Estimates," Internal Memorandum, 74B50-00-001-R2, to W. L. Wills, CH2M Hill, Hanford Group, Inc., dated April 10, 2000.

Idelchik, I. E., 1994, *Handbook of Hydraulic Resistance*, 3rd. Edition, CRC Press, Ann Arbor, Michigan.

Lyons, J. L., 1982, *Lyons' Valve Designer's Handbook*, Van Nostrand Reinhold Company, New York, New York.

Mathcad 2001 Professional, MathSoft, Inc., Cambridge, Massachusetts.

Olujuc, Z., 1981, *Compute Friction Factors Fast for Flow in Pipes*, Chemical Engineering, December Issue.

RPP-5667, 2000, *Stochastic Consequence Analysis for Waste Leaks*, Revision 0, B. E. Hay, et al., Fluor Federal Services, Richland, Washington.

Shook, C. A., and M. C. Roco, 1991, *Slurry Flow Principles and Practice*, Butterworth-Heinemann, Boston, MA.

PermAlert Drawing No. 95-597-EA

**CH2MHILL Hanford Group, Inc.**

**EVALUATION ANALYSIS**

Calc. No. RPP-LJJ-005
Revision: 0
Page No. 4 of 37

Client: CH2M Hill Hanford Group, Inc.
Subject: Secondary Encasement Pipe Pressure Due to Primary Pipe Break in Waste Tank Cross-Site Transfer Piping System
Location: 200 Area - Hanford Site, Richland, Washington

WO/Job No. _____
Date: 9/12/2001 By: L. J. Julyk LJJ
Checked: 9/25/01 By: K. J. Schlosser
Revised: _____ By: _____

**Table 1. Summary of Predicted Maximum Encasement Pressure (psig) for Postulated 1-in² Primary Pipe Break During Supernatant Waste Transfers in RCSTS and Selected 200 East Area Transfer Route.**

| Transfer Line | | Encasement Segement | Case | Start $L_o$ (ft) | Start $H_o$ (ft) | End $L_s$ (ft) | End $H_s$ (ft) | Drain Size (in.) | Figure | Appendix | Maximum Encasement Pressure (psig): Blocked Transfer Route Start | Blocked Transfer Route End | Blocked Transfer Route Dual | Appendix | Open Transfer Route Start | Open Transfer Route End | Open Transfer Route Dual | Design Pressure (psig) |
|---|---|---|---|---|---|---|---|---|---|---|---|---|---|---|---|---|---|---|
| RCSTS (W-058) Cross-Site Transfer (241-SY-102 to 241-AP-107) | SN-285 | 241-SY-02A (Pump Pit) to 241-SY-A (Valve Pit) | 0 | 0 | 0.00 | 339 | 2.58 | 1.5 | 1a | B0 | **62**[1,2] | (70)[2] | (20) | B1 | **54**[1] | (61)[2] | (17) | 60 |
| RCSTS (W-058) Cross-Site Transfer (241-SY-102 to 241-AP-107) | WT-SNL-3150 | 241-SY-A (Valve Pit) to 6241-A (Diversion Box) | 1 | 339 | 2.58 | 5,635 | 11.67 | 2 Rupture disk (set at 60 psig) | 1b | B0 | (88)[2] | **175**[1,2] | (29)[3] | B1 | (62)[2] | **151**[1,2] | (24)[3] | 50 |
| RCSTS (W-058) Cross-Site Transfer (241-SY-102 to 241-AP-107) | WT-SNL-3150 | 6241-A (Diversion Box) to 6241-V (Vent Station) | 2 | 6,600 | 11.80 | 13,631 | 85.63 | 2 Rupture disk (set at 60 psig) | 1c | B0 | 44[3] | 166[2] | **33**[1,3] | B1 | 19[3] | 120[2] | **19**[1,3] | 50 |
| RCSTS (W-058) Cross-Site Transfer (241-SY-102 to 241-AP-107) | WT-SNL-3150 | 6241-V (Vent Station) to 244-A (Lift Station) | 3 | 20,362 | 85.63 | 22,425 | 10.88 | 2 Rupture disk (set at 60 psig) | 1d | B0 | **83**[1,2] | (69)[2] | (24)[3] | B1 | **32**[1,3] | (13)[3] | (7)[3] | 50 |
| Selected 200 East Area Transfer Route (214-AW-105 to WTP) | SN-265 | 241-AW-05A (Pump Pit) to 241-AW-A | 0 | 0 | 0.00 | 348 | 0.85 | 2[4] | 1a | C0 | **62**[1,2] | -- | -- | C1 | **40**[1] | -- | -- | 60 |
| Selected 200 East Area Transfer Route (214-AW-105 to WTP) | SN-267 | 241-AW-A to 241-AW-02A | 1 | 348 | 0.85 | 329 | 0.00 | 1.5 | 1b | C0 | -- | **62**[1,2] | -- | C1 | -- | **37**[1] | -- | 60 |
| Selected 200 East Area Transfer Route (214-AW-105 to WTP) | SN-609 | 241-AW-02A to 241-AP Pit | 2 | 677 | 0.00 | 966 | -7.89 | 2[4] | 1c | C0 | -- | **63**[1,2] | -- | C1 | -- | **34**[1] | -- | 60 |
| Selected 200 East Area Transfer Route (214-AW-105 to WTP) | W-314 | 241-AP Pit to 241-AP-A Pit | 3 | 1,643 | -7.89 | 655 | -10.50 | 2[4] | 1d | C0 | -- | **55**[1] | -- | C1 | -- | **27**[1] | -- | 400 |
| Selected 200 East Area Transfer Route (214-AW-105 to WTP) | W-314 | 241-AP-A Pit to WTP | 4 | 2,298 | -10.50 | 2,723 | -22.10 | 2[4] | 1e | C0 | -- | **78**[1] | -- | C1 | -- | **32**[1] | -- | 400 |

All anchors, guides, and supports in annulus between encasement and primary pipe and postulated crack opening modeled as thick-edged orifice per Lyons 1982, Equation 4, page 158.

Values in ( ) are for non-design configurations; i.e. would require additional drain or rupture disk.

[1]Maximum encasement pressure for design configuration shown in **bold** text.

[2]Pressure exceeds design pressure.

[3]Encasement pressure will rise to the rupture disk burst pressure (60 psig), opening the flow path(s) then the pressure will decrease to the pressure shown.

[4]Two-inch diameter drain conservatively evaluated as 1.5-inch diameter drain to bound 200 East Area transfer routes.

**CH2MHILL Hanford Group, Inc.**

**EVALUATION ANALYSIS**

Calc. No. RPP-LJJ-005
Revision: 0
Page No. 5 of 37

Client: CH2M Hill Hanford Group, Inc.
Subject: Secondary Encasement Pipe Pressure Due to Primary Pipe Break in Waste Tank Cross-Site Transfer Piping System
Location: 200 Area - Hanford Site, Richland, Washington

WO/Job No. _____
Date: 9/12/2001 By: L. J. Julyk
Checked: 9/25/01 By: [illegible]
Revised: _____ By: _____

## 6.0 ANALYSIS

$gpm := \frac{gal}{min}$ $mil := \frac{in}{1000}$ $cP := \frac{poise}{100}$ $psi := 1 \cdot \frac{lbf}{in^2}$ units

$TOL = 1 \times 10^{-3}$

$CTOL = 1 \times 10^{-3}$

### 6.1 Waste Properties

The density and viscosity of water as a function of temperature (°C) were obtained from Shook and Roco (1991) and Estey and Hu (1998) as

$$\rho_{water}(t_C) := \left[999.7 - 0.10512 \cdot (t_C - 10) - 0.005121 \cdot (t_C - 10)^2 + 0.00001329 \cdot (t_C - 10)^3\right] \cdot \frac{kg}{m^3}$$

mass density of water

(5 °C < $t_C$ <100 °C)

viscosity of water as a function of temperature (°C)

$$\mu_{water}(t_C) := \begin{cases} 100 \cdot \exp\left[\ln(10) \cdot \left[\frac{1301}{998.333 + 8.1855 \cdot (t_C - 20) + 0.00585 \cdot (t_C - 20)^2} - 3.30233\right]\right] \cdot cP & \text{if } t_C \le 20 \\ (1.002) \cdot \exp\left[\ln(10) \cdot \left[\frac{\left[1.3272 \cdot (20 - t_C) - 0.001053 \cdot (t_C - 20)^2\right]}{t_C + 105}\right]\right] \cdot cP & \text{otherwise} \end{cases}$$

*The above properties of water can be assumed for the pipeline flush condition as a function of the temperature of the flush water. These properties can vary if the flush water is treated.*

The viscosity of the carrier liquid is given in Estey 2000 by the following relation:

$\rho$ density of carrier liquid with dissolved solids

$x_{salt} := 0.9$ fraction of dissolved solids composed of sodium and other salts (typical)

$x_{caustic} := 0.1$ fraction of dissolved solids composed of sodium hydroxide

$$\mu(\rho, t_C) := \mu_{water}(t_C) \cdot \left[x_{salt} \cdot \left[1 + 1.071 \cdot \left(\frac{\rho}{\rho_{water}(t_C)} - 1\right)\right] + x_{caustic} \cdot \exp\left[\left[7.143 \cdot \left(\frac{\rho}{\rho_{water}(t_C)} - 1\right)\right]^{1.15}\right]\right]$$

The following temperature conversion functions are defined to convert between Fahrenheit and Celsius temperature scales.

$$T_F(t_C) := \frac{9}{5} \cdot t_C + 32 \qquad T_C(t_F) := \frac{5}{9} \cdot (t_F - 32)$$

bulk density

| | | | |
|---|---|---|---|
| $\rho := 1.5 \cdot \frac{kg}{liter}$ | $t_C := 40$ | $T_F(t_C) = 104$ | $\mu(\rho, t_C) = 6.44\,cP$ |
| | $t_C := 60$ | $T_F(t_C) = 140$ | $\mu(\rho, t_C) = 5.19\,cP$ |
| $\rho := 1.4 \cdot \frac{kg}{liter}$ | $t_C := 40$ | | $\mu(\rho, t_C) = 2.9\,cP$ |
| | $t_C := 60$ | | $\mu(\rho, t_C) = 2.27\,cP$ |
| $\rho := 1.3 \cdot \frac{kg}{liter}$ | $t_C := 40$ | | $\mu(\rho, t_C) = 1.57\,cP$ |
| | $t_C := 60$ | | $\mu(\rho, t_C) = 1.2\,cP$ |

Client: CH2M Hill Hanford Group, Inc.
Subject: Secondary Encasement Pipe Pressure Due to Primary Pipe Break in Waste Tank Cross-Site Transfer Piping System
Location: 200 Area - Hanford Site, Richland, Washington

WO/Job No. _____
Date: 9/12/2001 By: L. J. Julyk
Checked: 9/25/01 By: R. Schlosser
Revised: _____ By: _____

### 6.2 Pump Characteristics

Only SY-Farm transfer pumps are used for supernatant cross-site liquid transfers. SY-Farm transfer pump plus booster pump in Diversion Box 6241-A are used in series for cross-site slurry transfers.

**SY-102 (SY-02A-3) Existing Transfer Pump**
(Peabody Floway Serial No. 80-2289-2291)

| Flow (gpm) | Head (ft) |
|---|---|
| 0 | 410 |
| 20 | 390 |
| 40 | 360 |
| 80 | 310 |
| 100 | 260 |
| 120 | 195 |
| 140 | 120 |

(at 1760 RPM)

$vQ_{ETP_i} :=$ $vH_{ETP_i} :=$

Design Condition

$vH_{ETP} := vH_{ETP}$

$cH_{ETP} := \text{regress}(vQ_{ETP}, vH_{ETP}, 2)$

$H_{ETP}(Q) := \text{interp}\left(cH_{ETP}, vQ_{ETP}, vH_{ETP}, \frac{Q}{gpm}\right) \cdot ft$

$p_{ETP}(Q, \rho) := H_{ETP}(Q) \cdot \rho \cdot g$

$Q_{ETP_runout} := \text{root}(H_{ETP}(Q), Q)$

$Q_{ETP_runout} = 170\,gpm$ run-out flow rate

Pump deadhead pressure $v := 0 \cdot ft \cdot sec^{-1}$

$p_{ETP}\left(Q_v(v), 1.3 \cdot \frac{kg}{liter}\right) = 227\,psi$

$p_{ETP}\left(Q_v(v), 1.5 \cdot \frac{kg}{liter}\right) = 262\,psi$

Pump discharge pressure at $v := 4.5 \cdot ft \cdot sec^{-1}$ $Q_v(v) = 104\,gpm$

$p_{ETP}\left(Q_v(v), 1.3 \cdot \frac{kg}{liter}\right) = 137\,psi$

$p_{ETP}\left(Q_v(v), 1.5 \cdot \frac{kg}{liter}\right) = 158\,psi$

Pump discharge pressure at $v := 6 \cdot ft \cdot sec^{-1}$ $Q_v(v) = 138\,gpm$

$p_{ETP}\left(Q_v(v), 1.3 \cdot \frac{kg}{liter}\right) = 74\,psi$

$p_{ETP}\left(Q_v(v), 1.5 \cdot \frac{kg}{liter}\right) = 85\,psi$

**SY-101 New Transfer Pump** (RPP-5667 Rev. 0B)
(Canned Motor Westinghouse Pump Model 2A-513-A1)

| Flow (gpm) | Head (ft) |
|---|---|
| 0 | 510 |
| 40 | 510 |
| 80 | 490 |
| 120 | 470 |
| 160 | 435 |
| 180 | 420 |
| 220 | 370 |

$i := 0..6$

$vQ_{NTP_i} :=$ $vH_{NTP_i} :=$

Design Condition at 4000 RPM (motor unit head)

$vH_{NTP} := vH_{NTP} + 560 - 510$

$cH_{NTP} := \text{regress}(vQ_{NTP}, vH_{NTP}, 3)$

$H_{NTP}(Q) := \text{interp}\left(cH_{NTP}, vQ_{NTP}, vH_{NTP}, \frac{Q}{gpm}\right) \cdot ft$

$p_{NTP}(Q, \rho) := H_{NTP}(Q) \cdot \rho \cdot g$

$Q_{NTP_runout} := \text{root}(H_{NTP}(Q), Q)$

$Q_{NTP_runout} = 446\,gpm$ run-out flow rate

$p_{NTP}\left(Q_v(v), 1.3 \cdot \frac{kg}{liter}\right) = 316\,psi$

$p_{NTP}\left(Q_v(v), 1.5 \cdot \frac{kg}{liter}\right) = 365\,psi$

$p_{NTP}\left(Q_v(v), 1.3 \cdot \frac{kg}{liter}\right) = 299\,psi$

$p_{NTP}\left(Q_v(v), 1.5 \cdot \frac{kg}{liter}\right) = 345\,psi$

$p_{NTP}\left(Q_v(v), 1.3 \cdot \frac{kg}{liter}\right) = 285\,psi$

$p_{NTP}\left(Q_v(v), 1.5 \cdot \frac{kg}{liter}\right) = 329\,psi$

**CH2MHILL Hanford Group, Inc.**

**EVALUATION ANALYSIS**

Calc. No. RPP-LJJ-005
Revision: 0
Page No. 7 of 37

Client: CH2M Hill Hanford Group, Inc.
Subject: Secondary Encasement Pipe Pressure Due to Primary Pipe Break in Waste Tank Cross-Site Transfer Piping System
Location: 200 Area - Hanford Site, Richland, Washington

WO/Job No. _____
Date: 9/12/2001 By: L. J. Julyk
Checked: 9/25/01 By: [illegible]
Revised: _____ By: _____

**Project W-211 Prototype Transfer Pump** (RPP-5667 Rev. 0B)
(3x7 VTM 5 Stage Sulzer Pump)

| Flow (gpm) | Head (ft) |
|---|---|
| 0 | 700 |
| 80 | 660 |
| 100 | 600 |
| 120 | 500 |
| 140 | 410 |
| 170 | 300 |
| 190 | 220 |

(at 3688 RPM)

$vQ_{W211TP_i} : vH_{W211TP_i} :=$

$cH_{W211TP} := regress(vQ_{W211TP}, vH_{W211TP}, 2)$

$H_{W211TP}(Q) := interp\left(cH_{W211TP}, vQ_{W211TP}, vH_{W211TP}, \frac{Q}{gpm}\right) \cdot ft$

$p_{W211TP}(Q, \rho) := H_{W211TP}(Q) \cdot \rho \cdot g$

$Q_{W211TP_runout} := root(H_{W211TP}(Q), Q)$

$Q_{W211TP_runout} = 222\ gpm$ run-out flow rate

Pump deadhead pressure $v := 0 \cdot ft \cdot sec^{-1}$

$p_{W211TP}\left(Q_v(v), 1.3 \cdot \frac{kg}{liter}\right) = 399\ psi$

$p_{W211TP}\left(Q_v(v), 1.5 \cdot \frac{kg}{liter}\right) = 461\ psi$

Pump discharge pressure at $v := 4.5 \cdot ft \cdot sec^{-1}$ $Q_v(v) = 104\ gpm$

$p_{W211TP}\left(Q_v(v), 1.3 \cdot \frac{kg}{liter}\right) = 322\ psi$

$p_{W211TP}\left(Q_v(v), 1.5 \cdot \frac{kg}{liter}\right) = 371\ psi$

Pump discharge pressure at $v := 6 \cdot ft \cdot sec^{-1}$ $Q_v(v) = 138\ gpm$

$p_{W211TP}\left(Q_v(v), 1.3 \cdot \frac{kg}{liter}\right) = 254\ psi$

$p_{W211TP}\left(Q_v(v), 1.5 \cdot \frac{kg}{liter}\right) = 293\ psi$

**Cross-Site Booster Pump** (RPP-5667 Rev. 0B)
(3x2x8.75 MSE 9 Stage Sulzer Bingham Pump)
at Diversion Box 6241-A (Slurry Transfer Only)

| Flow (gpm) | Head (ft) |
|---|---|
| 0 | 2900 |
| 80 | 2850 |
| 100 | 2750 |
| 120 | 2600 |
| 140 | 2500 |
| 160 | 2350 |
| 200 | 2000 |

(at 3600 RPM 100% speed)

$vQ_{BP_i} :=$ $vH_{BP_i} :=$

$cH_{BP} := regress(vQ_{BP}, vH_{BP}, 2)$

$H_{BP}(Q) := interp\left(cH_{BP}, vQ_{BP}, vH_{BP}, \frac{Q}{gpm}\right) \cdot ft$

$p_{BP}(Q, \rho) := H_{BP}(Q) \cdot \rho \cdot g$

$Q_{BP_runout} := root(H_{BP}(Q), Q)$

$Q_{BP_runout} = 338\ gpm$ run-out flow rate

$p_{BP}\left(Q_v(v), 1.3 \cdot \frac{kg}{liter}\right) = 1639\ psi$

$p_{BP}\left(Q_v(v), 1.5 \cdot \frac{kg}{liter}\right) = 1891\ psi$

$p_{BP}\left(Q_v(v), 1.3 \cdot \frac{kg}{liter}\right) = 1533\ psi$

$p_{BP}\left(Q_v(v), 1.5 \cdot \frac{kg}{liter}\right) = 1769\ psi$

$p_{BP}\left(Q_v(v), 1.3 \cdot \frac{kg}{liter}\right) = 1420\ psi$

$p_{BP}\left(Q_v(v), 1.5 \cdot \frac{kg}{liter}\right) = 1638\ psi$

**CH2MHILL Hanford Group, Inc.**

**EVALUATION ANALYSIS**

Calc. No. RPP-LJJ-005
Revision: 0
Page No. 8 of 37

Client: CH2M Hill Hanford Group, Inc.
Subject: Secondary Encasement Pipe Pressure Due to Primary Pipe Break in Waste Tank Cross-Site Transfer Piping System
Location: 200 Area - Hanford Site, Richland, Washington

WO/Job No. _____
Date: 9/12/2001 By: L. J. Julyk
Checked: 9/25/01 By: [illegible]
Revised: _____ By: _____

**Figure 2a. SY-Farm Transfer Pump Head Curves.**

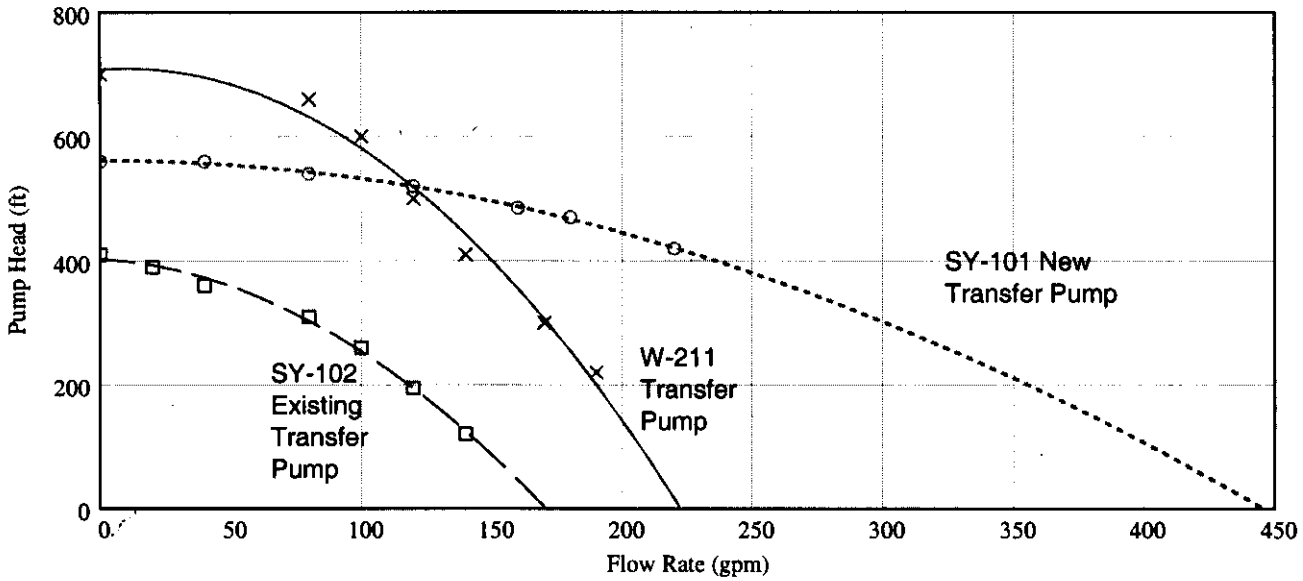


**Figure 2b. SY-Farm Transfer Pump Discharge Pressure Curves for Waste Density of 1 and 1.5 kg/L.**

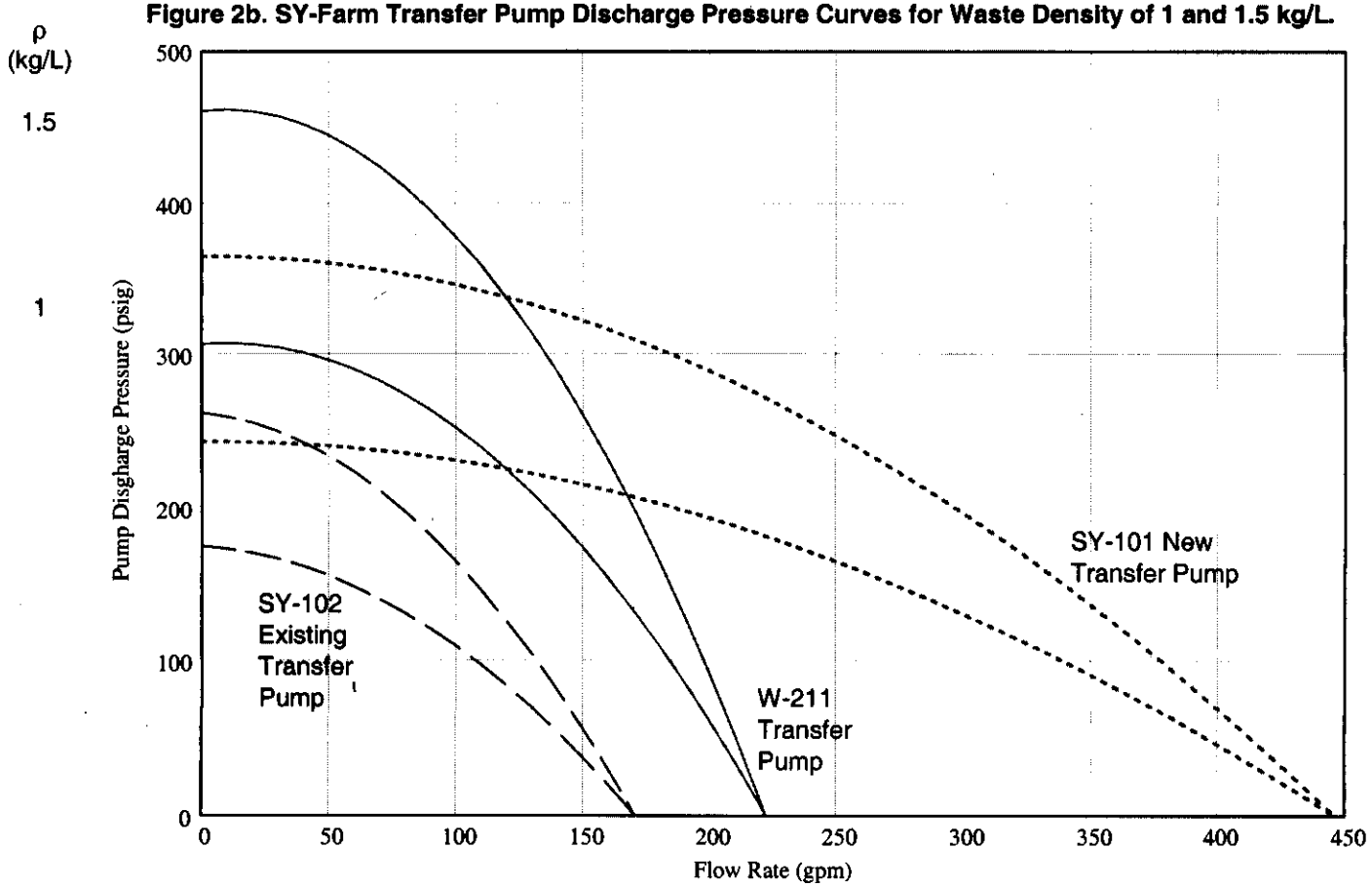

**CH2MHILL Hanford Group, Inc.**

**EVALUATION ANALYSIS**

Calc. No. RPP-LJJ-005
Revision: 0
Page No. 9 of 37

Client: CH2M Hill Hanford Group, Inc.
Subject: Secondary Encasement Pipe Pressure Due to Primary Pipe Break in Waste Tank Cross-Site Transfer Piping System
Location: 200 Area - Hanford Site, Richland, Washington

WO/Job No. _____.
Date: 9/12/2001 By: L. J. Julyk LJ
Checked: 9/25/01 By: R. Schlosser
Revised: _____ By: _____.

**Figure 2c. Cross-Site Booster Pump Head Curve.**

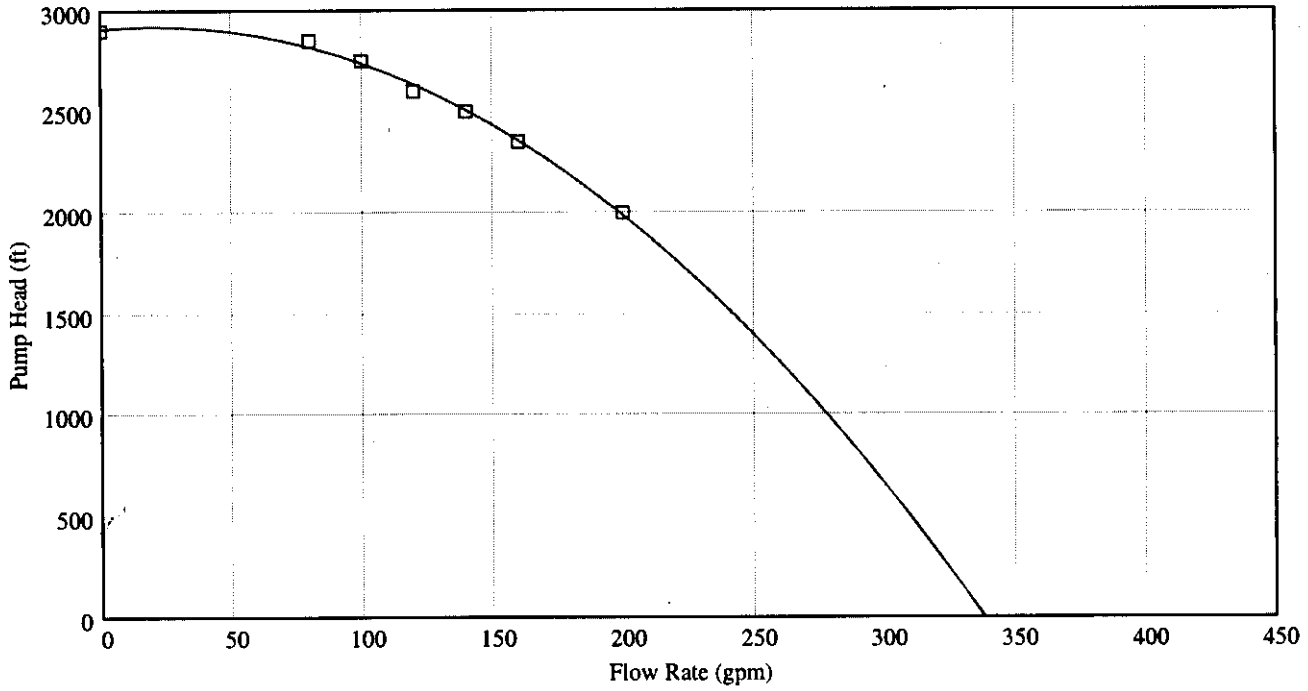


**Figure 2d. Cross-Site Booster Pump Discharge Pressure Curves for Waste Density of 1, 1.3 and 1.5 kg/L.**

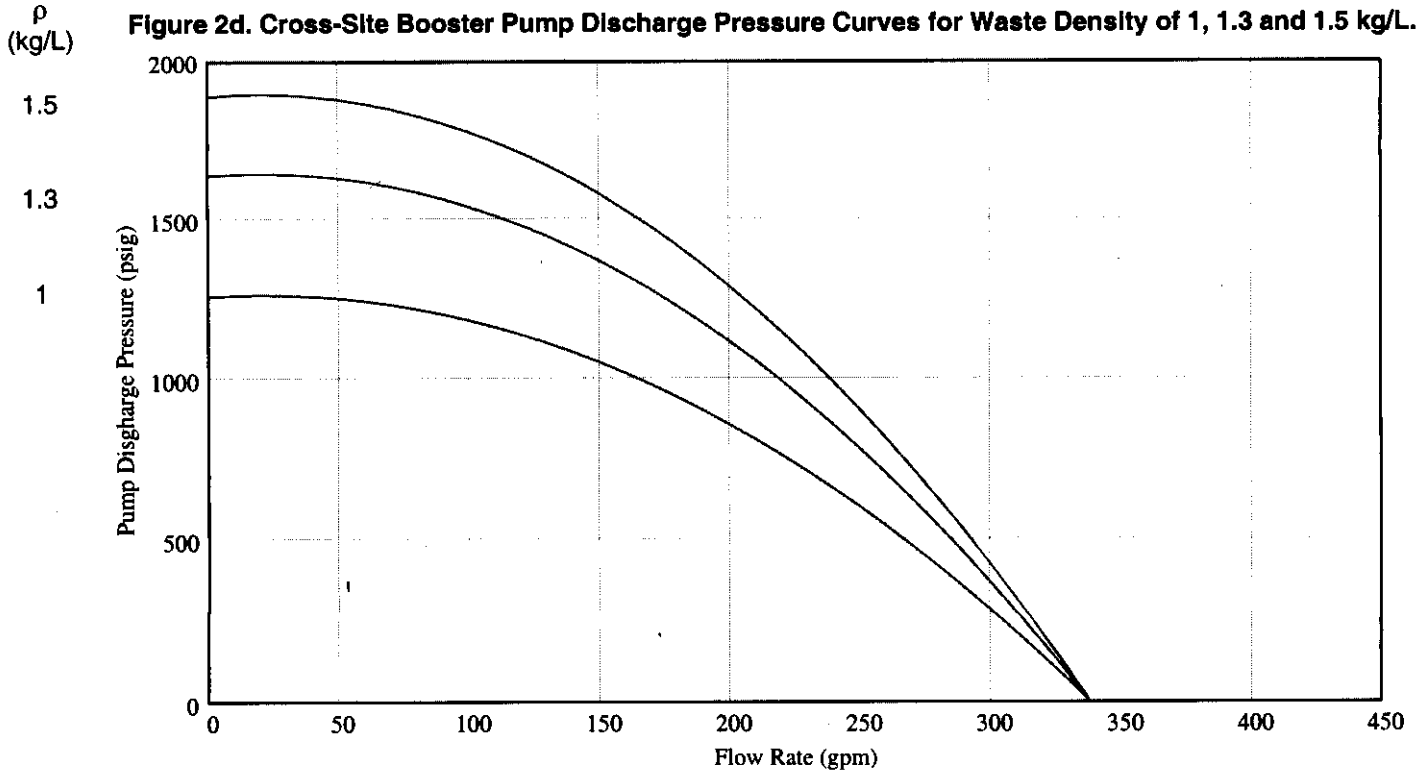

### 6.3 Darcy Friction Factor

$R_e(D, v, \rho, \mu) := \frac{\rho}{\mu} \cdot D \cdot v$ Reynolds number

$\eta = \frac{\varepsilon}{D}$ relative roughness ratio

Olujic (1981) reports the following Darcy friction factor approximation developed by Churchill in 1977 that includes the laminar and turbulent regimes as well as the transition regime between laminar and turbulent flow

$$f(R_e, \eta) := \left| \begin{array}{l} A \leftarrow \left[ 2.457 \cdot \ln\left[ \dfrac{1}{\left(\dfrac{7}{R_e}\right)^{0.9} + 0.27 \cdot \eta} \right] \right]^{16} \\ B \leftarrow \left( \dfrac{37530}{R_e} \right)^{16} \\ 8 \cdot \left[ \left(\dfrac{8}{R_e}\right)^{12} + \left(\dfrac{1}{A+B}\right)^{\frac{3}{2}} \right]^{\frac{1}{12}} \end{array} \right.$$

primary pipe is stainless steel and secondary encasement is carbon steel

$\varepsilon =$ pipe roughness, seamless steel pipe (Blevins 1984)
new condition $\varepsilon = 0.8$ to 4 mils (carbon or stainless steel)
light rust $\varepsilon = 6$ to 40 mils (carbon, 1/3 value for stainless)
general rust $\varepsilon = 40$ to 100 mils (carbon steel only)

$\varepsilon := 2 \cdot mil$ $V := 10 \cdot \frac{ft}{sec}$ $t_C := 60$ $T_F(t_C) = 140$ $D_{Pi} = 3.068\,in$

$\rho = 1.3 \frac{kg}{liter}$ $\mu(\rho, t_C) = 1.197\,cP$ $\frac{\varepsilon}{D_{Pi}} = 0.000652$

$R_e(D_{Pi}, V, \rho, \mu(\rho, t_C)) = 2.579 \times 10^5$ $f\left(R_e(D_{Pi}, V, \rho, \mu(\rho, t_C)), \frac{\varepsilon}{D_{Pi}}\right) = 0.01933$

Client: CH2M Hill Hanford Group, Inc. WO/Job No. _____
Subject: Secondary Encasement Pipe Pressure Due to Primary Pipe Break in Waste Tank Cross-Site Transfer Piping System
Date: 9/12/2001 By: L. J. Julyk
Checked: 9/25/01 By: R. H. Losser
Location: 200 Area - Hanford Site, Richland, Washington
Revised: _____ By: _____

### 6.4 Pipe Parameters

$A_f(D_i) \equiv \frac{\pi}{4} \cdot D_i^2$ flow area of pipe

Primary transfer pipe, 3-in. schedule 40

$D_{Pi} \equiv 3.068 \cdot in$ internal diameter) $D_{Po} := 3.5 \cdot in$ outside diameter

$t_P := 0.5 \cdot (D_{Po} - D_{Pi})$ $t_P = 0.216\,in$ pipe thickness

$A_P \equiv A_f(D_{Pi})$ $A_P = 7.393\,in^2$ flow area of pipe $Q_v(v) \equiv A_P \cdot v$ volume flow rate

Drain pipe

| 1-in. schedule 40 | 1 1/2-in. schedule 40 | 2-in. schedule 40 | |
|---|---|---|---|
| $D_{D1i} := 1.049 \cdot in$ | $D_{D1.5i} := 1.610 \cdot in$ | $D_{D2i} := 2.067 \cdot in$ | nominal internal diameter |
| $A_{D1} := A_f(D_{D1i})$ | $A_{D1.5} := A_f(D_{D1.5i})$ | $A_{D2} := A_f(D_{D2i})$ | flow area of drain pipe |
| $A_{D1} = 0.864\,in^2$ | $A_{D1.5} = 2.036\,in^2$ | $A_{D2} = 3.356\,in^2$ | |

Secondary encasement pipe annulus

$D_{LDo_W058} := 0.31 \cdot in$ outside diameter of leak detector cable (W-058 only, PermAlert's Model No. AGW-Gold RT)

$D_{LDo_Existing} := 0 \cdot in$ $D_{LDo_W314} := 0 \cdot in$ $D_{LDo} := D_{LDo_W058}$

internal diameter of encasement pipe 6-in. schedule 40 12-in. schedule 40 at bends and expansion loops

flow area of annulus region between primary and secondary pipe $D_{S6i} := 6.065 \cdot in$ $D_{S12i} := 12 \cdot in$

$A_S(D_{Si}, D_{LDo}) := \frac{\pi}{4} \cdot \left(D_{Si}^2 - D_{Po}^2\right) - \frac{\pi}{4} \cdot D_{LDo}^2$ flow area $A_S(D_{S6i}, D_{LDo}) = 19.2\,in^2$ $A_S(D_{S12i}, D_{LDo}) = 103.4\,in^2$

$P_S(D_{Si}, D_{LDo}) := \pi \cdot (D_{Si} + D_{Po} + D_{LDo})$ wetted perimeter $P_S(D_{S6i}, D_{LDo}) = 31\,in$ $P_S(D_{S12i}, D_{LDo}) = 49.7\,in$

hydraulic diameter for secondary encasement pipe annulus $A_S(D_{S6i}, 0 \cdot in) = 19.269\,in^2$

$D_{H_annulus}(D_{Si}, D_{LDo}) := 4 \cdot \frac{A_S(D_{Si}, D_{LDo})}{P_S(D_{Si}, D_{LDo})}$ $P_S(D_{S6i}, 0 \cdot in) = 30.049\,in$

$D_{H_annulus}(D_{S6i}, D_{LDo}) = 2.475\,in$ $D_{H_annulus}(D_{S12i}, D_{LDo}) = 8.327\,in$

$D_{H_annulus}(D_{S6i}, D_{LDo_W314}) = 2.565\,in$

### 6.5 K-Resistance Loss Factors

Head losses in the annulus region between the primary pipe and the secondary encasement due to steady-state flow in the annulus region resulting from a primary pipe break must be considered. Pipe bends are included in the effective length of the pipe section or pipe drain effective length. The head loss due to sudden contractions or enlargements from the primary pipe supports and changes in flow area from the annulus to drain pipe are estimated using an equivalent hydraulic diameter approach to determine the K-resistance loss factors (see Blevins 1984). That is, the head loss is given by $h_L = K\,V^2/2g$ where K (K-resistance loss factors) is estimated using an equivalent hydraulic diameter approach (see below) and V is the flow velocity in the annulus region of the pipe (upstream of the obstruction).

**CH2MHILL Hanford Group, Inc.**

**EVALUATION ANALYSIS**



Client: CH2M Hill Hanford Group, Inc. WO/Job No. _____
Subject: Secondary Encasement Pipe Pressure Due to Primary Pipe Break in Waste Tank Cross-Site Transfer Piping System
Location: 200 Area - Hanford Site, Richland, Washington

Date: 9/12/2001 By: L. J. Julyk
Checked: 9/25/01 By: [illegible]
Revised: _____ By: _____

The primary transfer pipe is supported within the secondary encasement pipe at various locations along the pipeline by either sliding supports (Figure 3), guide supports (Figure 4), or anchors (Figure 5). The sliding supports typically occur at pipe bend and expansion loop locations where the encasement pipe diameter increases from 6 inches to 12 inches. The pipe guide supports are typically spaced at 12 foot increments. The spacing of the pipe anchors is variable but on average is 550 feet (see PermAlert Drawing No. 95-597-EA). For simplicity, the head loss from the sliding supports at the pipe bends and expansion loops is neglected because it is greatly offset by the increase in diameter of the encasement pipe.

Assume that pressure losses due to supports, guides or anchors can be approximated (first order approximation) from corresponding pressure losses due to a long hole orifice plate with equivalent hydraulic flow area.

K-resistance loss factor for a long hole orifice plate with upstream and downstream flow diameter D, center hole of diameter $D_o$, and plate thickness L per Section 22, Eqn 4 of Lyons 1982 is applied to estimate the pressure loss from the pipe support, guide, and pipe anchor. The original equation is based on the flow velocity through the orifice ($V_o$) and is recast herein in terms of the *upstream* flow velocity (V). First the correction factor accounting for plate thickness is given as

$i := 0..12$

$v\alpha_i :=$ $vK_{L_i} :=$

| $v\alpha_i$ | $vK_{L_i}$ |
|---|---|
| 0 | 1.3 |
| 0.25 | 1.2 |
| 0.5 | 1.0 |
| 0.75 | 0.75 |
| 1.0 | 0.55 |
| 1.25 | 0.4 |
| 1.5 | 0.3 |
| 1.75 | 0.2 |
| 2.0 | 0.15 |
| 2.25 | 0.1 |
| 2.5 | 0.06 |
| 2.75 | 0.03 |
| 3.0 | 0 |

$K_L(\alpha) := \text{linterp}(v\alpha, vK_L, \alpha)$ Correction Factor $K_L$ (Lyons 1982)

$$KK_L(\alpha) := \left| \begin{array}{l} \zeta \leftarrow (2.4-\alpha)\cdot 10^{-\left(0.25+\frac{0.535\cdot\alpha^8}{0.05+\alpha^8}\right)} \\ 0 \text{ if } \zeta < 0 \end{array} \right.$$ (Idelchik 1994)

Resulting K-resistance loss factor for a thick-edged (long) orifice plate based on *upstream* flow velocity becomes

$$K(\beta,\alpha,Re,\eta) := \frac{1}{\beta^4}\cdot\left[0.5\cdot\left(1-\beta^2\right) + K_L(\alpha)\cdot\sqrt{1-\beta^2}\cdot\left(1-\beta^2\right) + \left(1-\beta^2\right)^2 + f(Re,\eta)\cdot\alpha\right]$$ (Lyons 1982, Eqn 4, pg. 158)

$$KK(\beta,\alpha,Re,\eta) := \frac{1}{\beta^4}\cdot\left[\underbrace{0.5\cdot\left(1-\beta^2\right)^{0.75}}_{K_{entrance}} + \underbrace{KK_L(\alpha)\cdot\left(1-\beta^2\right)^{0.375}}_{K_{contraction}}\cdot\underbrace{\left(1-\beta^2\right)}_{K_{enlargement}} + \underbrace{\left(1-\beta^2\right)^2}_{K_{length}} + f(Re,\eta)\cdot\alpha\right]$$ (Idelchik 1994, Diagram 4-12, pg. 219)

where $\beta = D_o / D = (A_o / A)^{1/2}$

$\alpha = L / D_o = L / D_{oH} > 0.015$ $\quad Re = \frac{\rho}{\mu}\cdot D_o\cdot V_o = \frac{\rho}{\mu}\cdot D_{oH}\cdot\frac{V}{\beta^2} > 10^5$

**CH2MHILL Hanford Group, Inc.**

**EVALUATION ANALYSIS**

Calc. No. RPP-LJJ-005
Revision: 0
Page No. 13 of 37

Client: CH2M Hill Hanford Group, Inc.
Subject: Secondary Encasement Pipe Pressure Due to Primary Pipe Break in Waste Tank Cross-Site Transfer Piping System
Location: 200 Area - Hanford Site, Richland, Washington

WO/Job No. _____
Date: 9/12/2001 By: L. J. Julyk
Checked: 9/25/01 By: R. J. Schlosser
Revised: _____ By: _____

**Figure 3a. Correction Factor $K_L$ vs. $\alpha = L/D_o$ Ratio.**

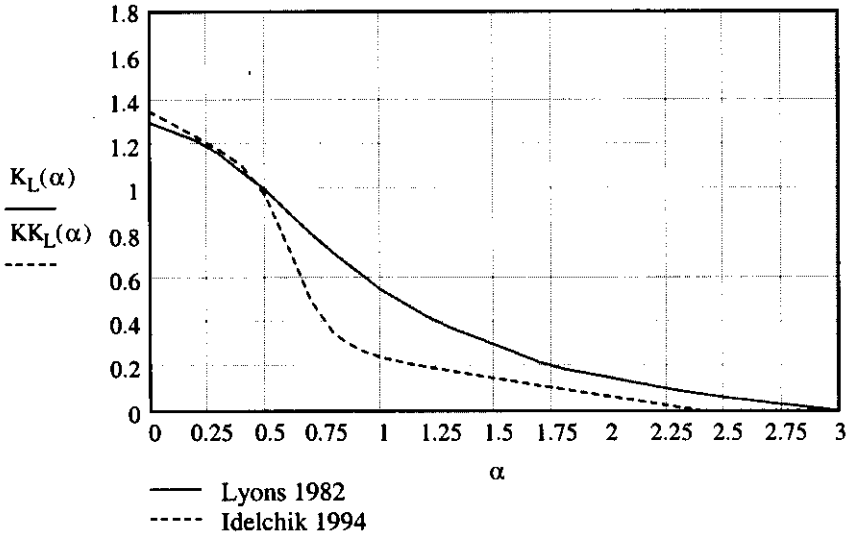


$v := 10 \cdot \frac{ft}{sec}$ $\rho := 1.3 \cdot \frac{kg}{liter}$ $t_C := 60$ $\varepsilon := 5 \cdot mil$ $\mu(\rho, t_C) = 1.197\,cP$ $\beta := 0.9$ $D_H := 1 \cdot in$

$T_F(t_C) = 140$

$$R_e\left(D_H, \frac{v}{\beta^2}, \rho, \mu(\rho, t_C)\right) = 1.038 \times 10^5$$

**Figure 3b. K-Resistance Factor for Thick-edged (Long) Orifice ( $\beta := 0.9$).**

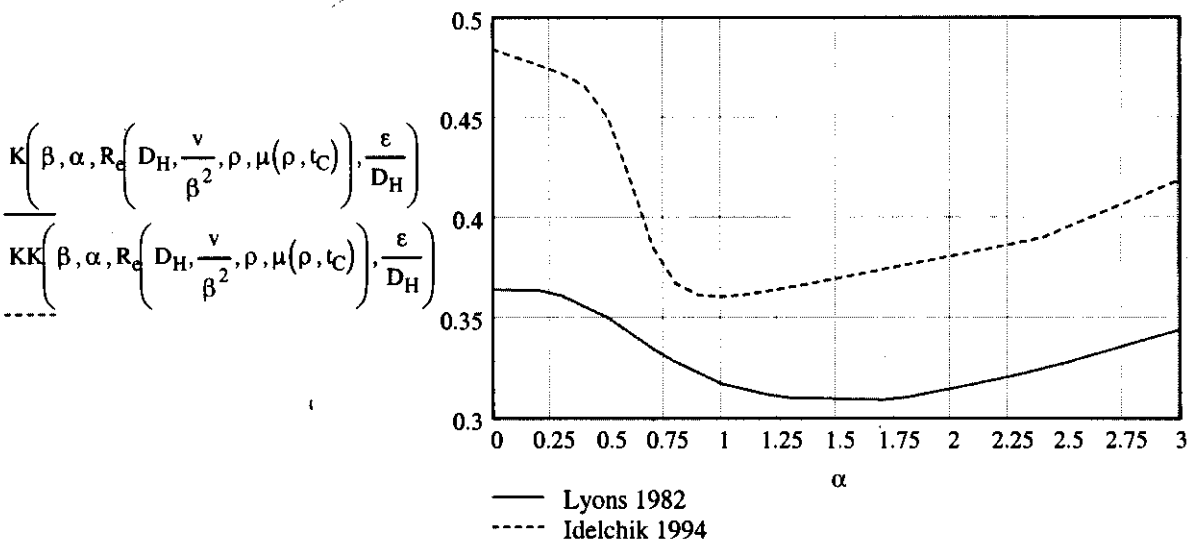

Client: CH2M Hill Hanford Group, Inc.
Subject: Secondary Encasement Pipe Pressure Due to Primary Pipe Break in Waste Tank Cross-Site Transfer Piping System
Location: 200 Area - Hanford Site, Richland, Washington

WO/Job No. _____
Date: 9/12/2001 By: L. J. Julyk
Checked: 9/25/01 By: [illegible]
Revised: _____ By: _____

**Figure 3c. K-Resistance Factor for Thick-edged (Long) Orifice ( $\beta := 0.75$).**

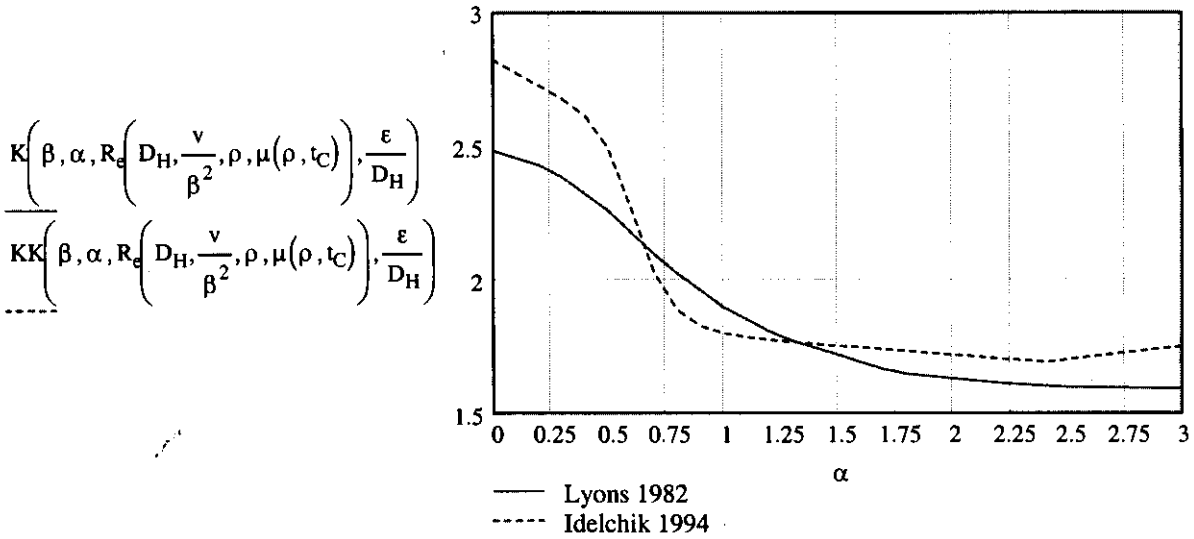


**Figure 3d. K-Resistance Factor for Thick-edged (Long) Orifice ( $\beta := 0.5$).**

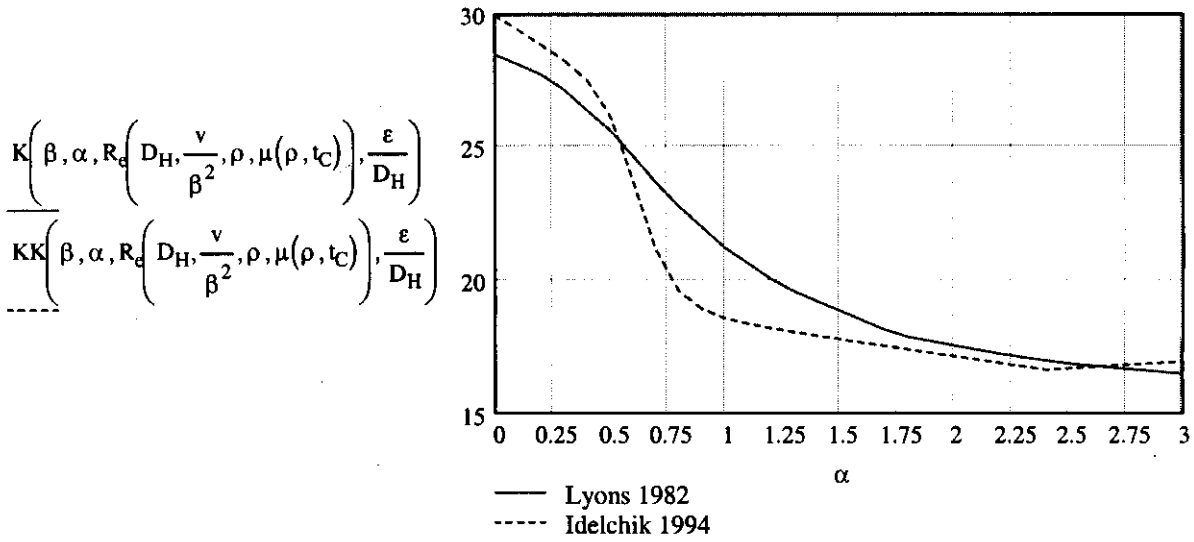

### 6.5.1 W-058 Pipe Sliding Support

**Figure 4. W-058 3x12 Sliding Support at Pipe Bends and Expansion Loops.**
(PermAlert Drawing No. 95-597-EA, Sheet 4)

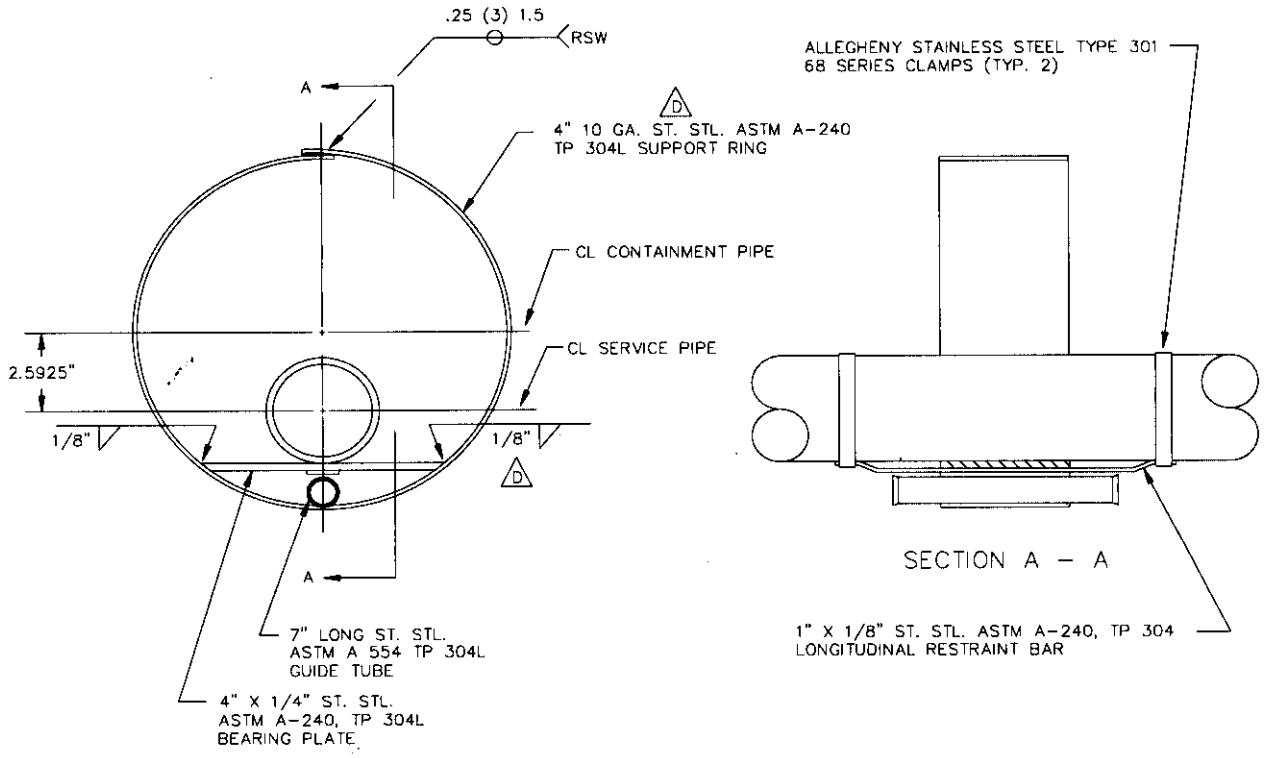


DETAIL 6
3 X 12 SLIDING SUPPORT

**CH2MHILL Hanford Group, Inc.**

**EVALUATION ANALYSIS**

Calc. No. RPP-LJJ-005
Revision: 0
Page No. 16 of 37

Client: CH2M Hill Hanford Group, Inc. WO/Job No. _____
Subject: Secondary Encasement Pipe Pressure Due to Primary Pipe Break in Waste Tank Cross-Site Transfer Piping System Date: 9/12/2001 By: L. J. Julyk LJJ
Checked: 9/25/01 By: RA Schlosser
Location: 200 Area - Hanford Site, Richland, Washington Revised: _____ By: _____

Pipe Sliding Support (W-058) in annulus region of pipe bends and expansion loops (Figure 4, neglect effect of 4-in. 10 Gauge support ring) $D_{LDo} := D_{LDo_W058}$ $D_{LDo} = 0.31\,in$

$t := \frac{1}{4} \cdot in$ support plate thickness $r_1 := \frac{D_{Po}}{2}$ $r_3 := \frac{D_{S12i}}{2}$ $\delta := 2.5925 \cdot in$ $h := r_3 - \left(\delta + r_1 + \frac{t}{2}\right)$

$\theta_3 := 2 \cdot acos\left(1 - \frac{h}{r_3}\right)$ $\theta_3 = 83.753\,deg$ $l := 2 \cdot r_3 \cdot sin\left(\frac{\theta_3}{2}\right)$

$A_{support} := A_S(D_{S12i}, D_{LDo}) - t \cdot l$ $A_{support} = 101.398\,in^2$ flow area at pipe supports

$P_{support} := P_S(D_{S12i}, D_{LDo}) + 2 \cdot l$ $P_{support} = 65.689\,in$ wetted perimeter

$D_{H_support} := 4 \cdot \frac{A_{support}}{P_{support}}$ $D_{H_support} = 6.174\,in$ hydraulic diameter for pipe support guide

$\beta_{support} := \sqrt{\frac{A_{support}}{A_S(D_{S12i}, D_{LDo})}}$ $\beta_{support} = 0.99$ $\beta := \sqrt{\frac{A_S(D_{S6i}, D_{LDo})}{A_S(D_{S12i}, D_{LDo})}}$

$L_{support} := 4 \cdot in$ length of support $\beta = 0.431$ $\frac{\beta}{\beta_{support}} = 0.435$

$\alpha_{support} := \frac{L_{support}}{D_{H_support}}$ $\alpha_{support} = 0.648$ $K_L(\alpha_{support}) = 0.852$

$$K_{support_W058}(v, \rho, t_C, \varepsilon) := K\left[\beta_{support}, \alpha_{support}, R_e\left[D_{H_support}, v \cdot \left(\frac{\beta}{\beta_{support}}\right)^2, \rho, \mu(\rho, t_C)\right], \frac{\varepsilon}{D_{H_support}}\right] \cdot \beta^4$$

$$KK_{support_W058}(v, \rho, t_C, \varepsilon) := KK\left[\beta_{support}, \alpha_{support}, R_e\left[D_{H_support}, v \cdot \left(\frac{\beta}{\beta_{support}}\right)^2, \rho, \mu(\rho, t_C)\right], \frac{\varepsilon}{D_{H_support}}\right] \cdot \beta^4$$

$v := 10 \cdot \frac{ft}{sec}$ $\rho := 1.3 \cdot \frac{kg}{liter}$ $t_C := 60$ $T_F(t_C) = 140$ $\mu(\rho, t_C) = 1.197\,cP$ $\varepsilon := 5 \cdot mil$

$K_{support_W058}(v, \rho, t_C, \varepsilon) = 0.0009$

$KK_{support_W058}(v, \rho, t_C, \varepsilon) = 0.0015$

**CH2MHILL Hanford Group, Inc.**
**EVALUATION ANALYSIS**

Calc. No. RPP-LJJ-005
Revision: 0
Page No. 17 of 37

Client: CH2M Hill Hanford Group, Inc.
Subject: Secondary Encasement Pipe Pressure Due to Primary Pipe Break in Waste Tank Cross-Site Transfer Piping System
Location: 200 Area - Hanford Site, Richland, Washington

WO/Job No. _____
Date: 9/12/2001 By: L. J. Julyk
Checked: 9/25/01 By: R. L. Schlosser
Revised: _____ By: _____

### 6.5.2 W-058 Guide Support

**Figure 5a. W-058 3x6 Guide Support at 12-Foot Spacing.**
(PermAlert Drawing No. 95-597-EA. Sheet 4)

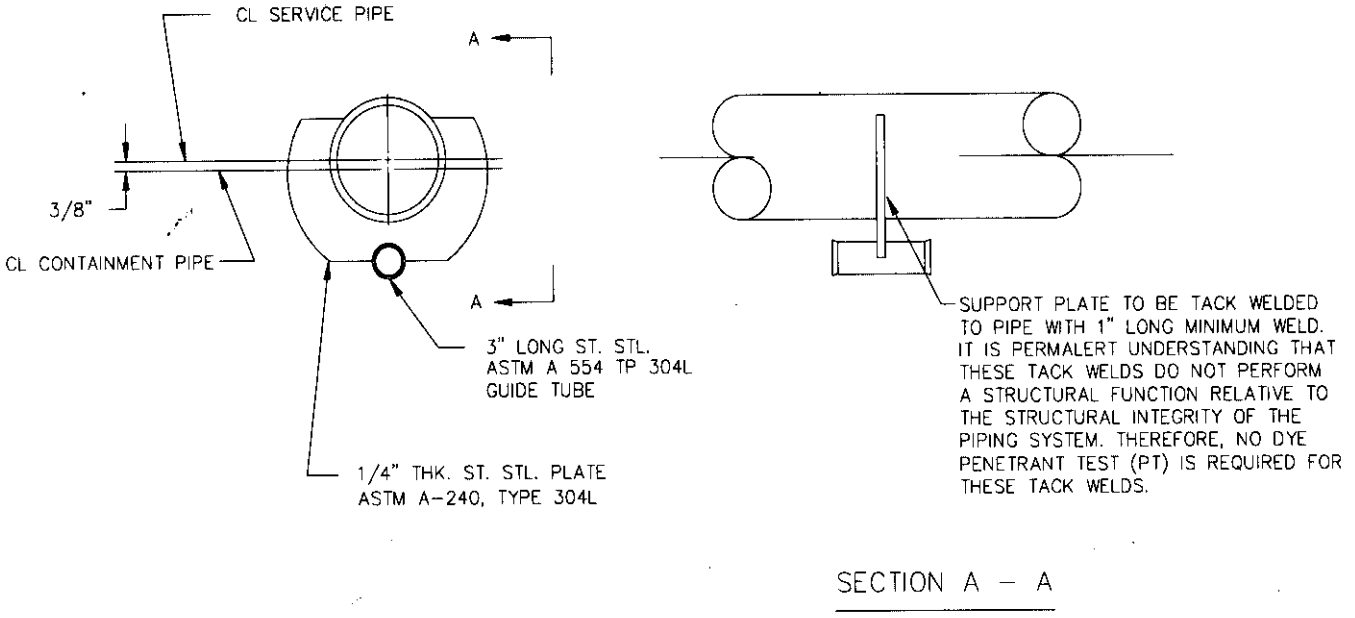


DETAIL 5
3 X 6 GUIDE SUPPORT

**CH2MHILL Hanford Group, Inc.**
**EVALUATION ANALYSIS**

Calc. No. RPP-LJJ-005
Revision: 0
Page No. 18 of 37

Client: CH2M Hill Hanford Group, Inc.
Subject: Secondary Encasement Pipe Pressure Due to Primary Pipe Break in Waste Tank Cross-Site Transfer Piping System
Location: 200 Area - Hanford Site, Richland, Washington

WO/Job No. _____
Date: 9/12/2001 By: L. J. Julyk
Checked: 9/25/01 By: [illegible]
Revised: _____ By: _____

Pipe 3 x 6 Guide Support (W-058) in annulus region (Figure 5a) $D_{LDo} := D_{LDo_W058}$ $D_{LDo} = 0.31\,in$

$r_{Po} := \frac{D_{Po}}{2}$ $r_{Si} := \frac{D_{S6i}}{2}$ $r := \left(2 + \frac{3}{4}\right) \cdot in$ $D_{tubing} := \frac{3}{4} \cdot in$ $r_4 := \frac{D_{tubing}}{2}$ leak detector guide tube

$t_{tubing} := 0.049 \cdot in$

$\Delta := \frac{3}{8} \cdot in$ $h_0 := \left(2 + \frac{7}{16}\right) \cdot in$ $h_1 := \left(1 + \frac{1}{4}\right) \cdot in$ $h_2 := h_1$ $h_3 := \left(1 + \frac{7}{8}\right) \cdot in$

$\delta := h_0 - \Delta - h_3$ $\delta = 0.188\,in$ $y_1 := h_1$ $y_2 := h_2$ $y_3 := -h_3$ $y_4 := y_3$

$x_1 := \sqrt{r_{Po}^2 - (y_1 - \Delta)^2}$ $x_1 = 1.516\,in$ $y_1 = 1.25\,in$ $f_1(y) := \sqrt{r_{Po}^2 - (y - \Delta)^2}$

$x_2 := \sqrt{r^2 - y_2^2}$ $x_2 = 2.449\,in$ $y_2 = 1.25\,in$ $f_2(y) := \sqrt{r^2 - y^2}$

$x_3 := \sqrt{r^2 - y_3^2}$ $x_3 = 2.012\,in$ $y_3 = -1.875\,in$ $f_0(y) := \sqrt{r_{Si}^2 - y^2}$

$x_4 := \sqrt{r_4^2 - (y_3 + h_3 + \delta)^2}$ $x_4 = 0.325\,in$ $y_4 = -1.875\,in$ $f_4(y) := \sqrt{r_4^2 - (y + h_3 + \delta)^2}$

$x_2 - x_1 = 0.934\,in$

$x_3 - x_4 = 1.687\,in$

$y'_1 := y_1, y_1 + 0.001 \cdot in .. (r_{Po} + \Delta)$

$y'_2 := y_3, y_3 + 0.001 \cdot in .. y_2$

$y'_0 := -r_{Si}, -r_{Si} + 0.001 \cdot in .. r_{Si}$

$y'_4 := -(r_4 + h_3 + \delta), -(r_4 + h_3 + \delta) + 0.001 \cdot in .. y_3$

**Figure 5b. Geometry Check.**

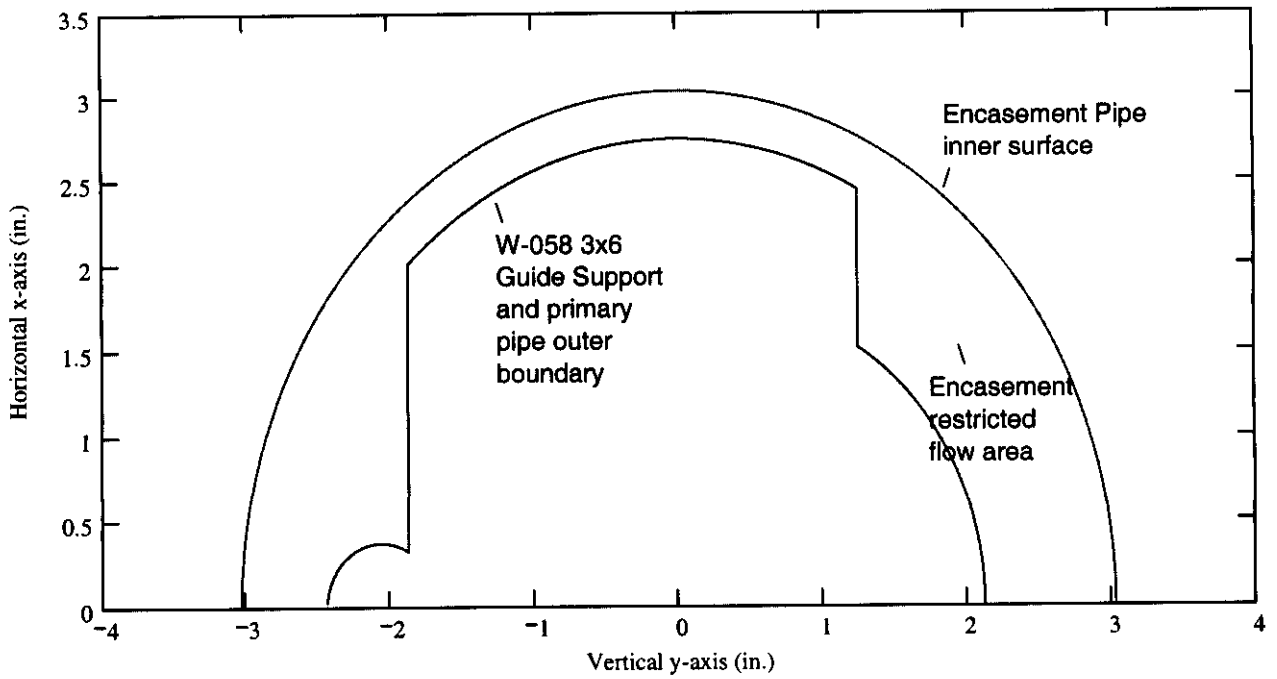

**CH2MHILL Hanford Group, Inc.**

**EVALUATION ANALYSIS**

Calc. No. RPP-LJJ-005
Revision: 0
Page No. 19 of 37

Client: CH2M Hill Hanford Group, Inc. WO/Job No. .
Subject: Secondary Encasement Pipe Pressure Due to Primary Pipe Break in Waste Tank Cross-Site Transfer Piping System
Date: 9/12/2001 By: L. J. Julyk
Checked: 9/25/01 By: [illegible]
Location: 200 Area - Hanford Site, Richland, Washington
Revised: By:

$$\theta_1 := 2 \cdot \mathrm{acos}\left[1 - \frac{r_{Po} - (h_1 - \Delta)}{r_{Po}}\right] \qquad \theta_1 = 120\,\mathrm{deg} \qquad \theta_3 := 2 \cdot \mathrm{acos}\left(1 - \frac{r - h_3}{r}\right) \qquad \theta_3 = 94.028\,\mathrm{deg}$$

$$\theta_2 := 2 \cdot \mathrm{acos}\left(1 - \frac{r - h_2}{r}\right) \qquad \theta_2 = 125.929\,\mathrm{deg} \qquad \theta_4 := 2 \cdot \mathrm{acos}\left(1 - \frac{r_4 - \delta}{r_4}\right) \qquad \theta_4 = 120\,\mathrm{deg}$$

$$A_{guide} := \pi \cdot r_{Si}^2 - \left[\left(2 \cdot \pi - \theta_4 + \sin(\theta_4)\right) \cdot \frac{r_4^2}{2} + \frac{r^2}{2} \cdot \sin(\theta_3) \ldots + \left(2 \cdot \pi - \theta_2 - \theta_3\right) \cdot \frac{r^2}{2} + \theta_1 \cdot \frac{r_{Po}^2}{2} + \left(\frac{r^2}{2} \cdot \sin(\theta_2) - \frac{r_{Po}^2}{2} \cdot \sin(\theta_1)\right)\right] \ldots + \left[\frac{\pi}{4} \cdot \left(D_{tubing} - 2 \cdot t_{tubing}\right)^2 - \frac{\pi}{4} \cdot D_{LDo}^2\right]$$

$$P_{guide} := 2 \cdot \pi \cdot r_{Si} + \theta_1 \cdot r_{Po} + 2 \cdot (x_2 - x_1) + \left(2 \cdot \pi - \theta_2 - \theta_3\right) \cdot r + 2 \cdot (x_3 - x_4) + \left(2 \cdot \pi - \theta_4\right) \cdot r_4 \ldots + \pi \cdot \left[D_{LDo} + \left(D_{tubing} - 2 \cdot t_{tubing}\right)\right]$$

$A_{guide} = 10.836\,\mathrm{in}^2$ flow area at pipe supports

$P_{guide} = 39.275\,\mathrm{in}$ *wetted perimeter* $\qquad D_{H_guide} := 4 \cdot \frac{A_{guide}}{P_{guide}} \qquad D_{H_guide} = 1.104\,in$ hydraulic diameter for pipe support guide

$$\beta_{guide} := \sqrt{\frac{A_{guide}}{A_S(D_{S6i}, D_{LDo})}} \qquad \beta_{guide} = 0.751 \qquad L_{guide} := \frac{1}{4} \cdot \mathrm{in}$$ *length of guide*

$$\alpha_{guide} := \frac{L_{guide}}{D_{H_guide}} \qquad \alpha_{guide} = 0.227 \qquad K_L(\alpha_{guide}) = 1.209$$

$$K_{guide_W058}(v, \rho, t_C, \varepsilon) := K\left(\beta_{guide}, \alpha_{guide}, R_e\left(D_{H_guide}, \frac{v}{\beta_{guide}^2}, \rho, \mu(\rho, t_C)\right), \frac{\varepsilon}{D_{H_guide}}\right)$$

$$KK_{guide_W058}(v, \rho, t_C, \varepsilon) := KK\left(\beta_{guide}, \alpha_{guide}, R_e\left(D_{H_guide}, \frac{v}{\beta_{guide}^2}, \rho, \mu(\rho, t_C)\right), \frac{\varepsilon}{D_{H_guide}}\right)$$

$v = 10\,\mathrm{ft\,sec^{-1}} \qquad \rho = 1.3\,\frac{\mathrm{kg}}{\mathrm{liter}} \qquad t_C = 60 \qquad T_F(t_C) = 140 \qquad \mu(\rho, t_C) = 1.197\,\mathrm{cP} \qquad \varepsilon = 5\,\mathrm{mil}$

$K_{guide_W058}(v, \rho, t_C, \varepsilon) = 2.39$

$KK_{guide_W058}(v, \rho, t_C, \varepsilon) = 2.68$

**CH2MHILL Hanford Group, Inc.**

**EVALUATION ANALYSIS**

Calc. No. RPP-LJJ-005
Revision: 0
Page No. 20 of 37

Client: CH2M Hill Hanford Group, Inc.
Subject: Secondary Encasement Pipe Pressure Due to Primary Pipe Break in Waste Tank Cross-Site Transfer Piping System
Location: 200 Area - Hanford Site, Richland, Washington

WO/Job No. _____
Date: 9/12/2001 By: L. J. Julyk
Checked: 9/25/01 By: [illegible]
Revised: _____ By: _____

### 6.5.3 W-058 Pipe Anchor

**Figure 6. W-058 Pipe Anchor at (Average) 550-Foot Spacing.**
(PermAlert Drawing No. 95-597-EA, Sheet 4)

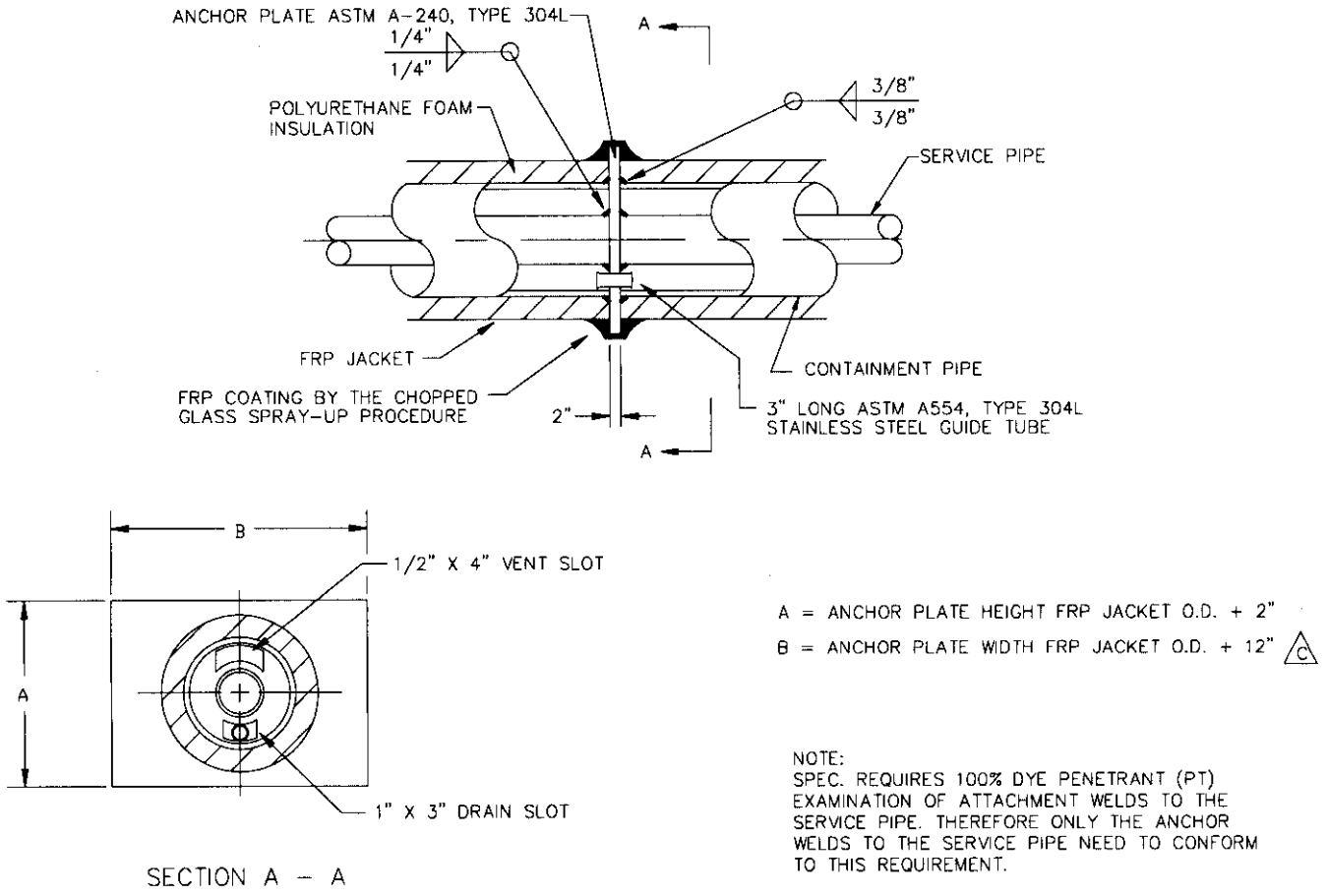

Client: CH2M Hill Hanford Group, Inc.
Subject: Secondary Encasement Pipe Pressure Due to Primary Pipe Break in Waste Tank Cross-Site Transfer Piping System
Location: 200 Area - Hanford Site, Richland, Washington

WO/Job No. _____
Date: 9/12/2001 By: L. J. Julyk
Checked: 9/25/01 By: [illegible]
Revised: _____ By: _____

Pipe Anchor (W-058) in annulus region (Figure 6 w/o end radius in slots as used in W314, see Figure 9)

$r_1 := \left(2 + \frac{17}{32}\right) \cdot in$ $\quad t_1 := \frac{D_{S6i}}{2} - r_1$ $\quad L_1 := 4 \cdot in$ $\quad \theta_1 := 2 \cdot asin\left[\frac{L_1}{\left(\frac{D_{S6i}}{2} + r_1\right)}\right]$

$D_{LDo} = 0.31\,in$

$D_{tubing} = 0.75\,in$

$t_{tubing} = 0.049\,in$

$r_1 = 2.531\,in$ $\quad t_1 = 0.501\,in$ $\quad \theta_1 = 91.934\,deg$

$r_2 := \left(2 + \frac{1}{32}\right) \cdot in$ $\quad t_2 := \frac{D_{S6i}}{2} - r_2$ $\quad L_2 := 3 \cdot in$ $\quad \theta_2 := 2 \cdot asin\left[\frac{L_2}{\left(\frac{D_{S6i}}{2} + r_2\right)}\right]$

$r_2 = 2.031\,in$ $\quad t_2 = 1.001\,in$ $\quad \theta_2 = 72.662\,deg$

account for leak detector guide tube

$$A_{anchor} := \frac{\theta_1}{2} \cdot \left[\left(\frac{D_{S6i}}{2}\right)^2 - r_1^2\right] + \frac{\theta_2}{2} \cdot \left[\left(\frac{D_{S6i}}{2}\right)^2 - r_2^2\right] - \frac{\pi}{4} \cdot D_{tubing}^2 + \frac{\pi}{4} \cdot \left(D_{tubing} - 2 \cdot t_{tubing}\right)^2 - \frac{\pi}{4} \cdot D_{LDo}^2$$

$$P_{anchor} := 2 \cdot t_1 + \theta_1 \cdot \left(\frac{D_{S6i}}{2} + r_1\right) + 2 \cdot t_2 + \theta_2 \cdot \left(\frac{D_{S6i}}{2} + r_2\right) + \pi \cdot D_{tubing} + \pi \cdot \left[D_{LDo} + \left(D_{tubing} - 2 \cdot t_{tubing}\right)\right]$$

$A_{anchor} = 5.269\,in^2$ flow area

$P_{anchor} = 23.732\,in$ wetted perimeter $\quad D_{H_anchor} := 4 \cdot \frac{A_{anchor}}{P_{anchor}}$ $\quad D_{H_anchor} = 0.888\,in$ hydraulic diameter for anchor

$\beta_{anchor} := \sqrt{\frac{A_{anchor}}{A_S(D_{S6i}, D_{LDo})}}$ $\quad \beta_{anchor} = 0.524$

W058 plate thickness for Type A B C anchor plates is
3/4 2 2 in.
However, the majority of anchors are of Type A (worst case), hence

$L_{anchor} := \frac{3}{4} \cdot in$ $\quad \alpha_{anchor} := \frac{L_{anchor}}{D_{H_anchor}}$

$\alpha_{anchor} = 0.845$ $\quad K_L(\alpha_{anchor}) = 0.674$

$$K_{anchor_W058}(v, \rho, t_C, \varepsilon) := K\left(\beta_{anchor}, \alpha_{anchor}, R_e\left(D_{H_anchor}, \frac{v}{\beta_{anchor}^2}, \rho, \mu(\rho, t_C)\right), \frac{\varepsilon}{D_{H_anchor}}\right)$$

$$KK_{anchor_W058}(v, \rho, t_C, \varepsilon) := KK\left(\beta_{anchor}, \alpha_{anchor}, R_e\left(D_{H_anchor}, \frac{v}{\beta_{anchor}^2}, \rho, \mu(\rho, t_C)\right), \frac{\varepsilon}{D_{H_anchor}}\right)$$

$v = 10\,ft\,sec^{-1}$ $\quad \rho = 1.3\,\frac{kg}{liter}$ $\quad t_C = 60$ $\quad T_F(t_C) = 140$ $\quad \mu(\rho, t_C) = 1.197\,cP$ $\quad \varepsilon = 5\,mil$

$K_{anchor_W058}(v, \rho, t_C, \varepsilon) = 17.69$

$KK_{anchor_W058}(v, \rho, t_C, \varepsilon) = 15.22$

Client: CH2M Hill Hanford Group, Inc. WO/Job No. _____
Subject: Secondary Encasement Pipe Pressure Due to Primary Pipe Break in Waste Tank Cross-Site Transfer Piping System
Date: 9/12/2001 By: L. J. Julyk
Checked: 9/25/01 By: [illegible]
Revised: _____ By: _____
Location: 200 Area - Hanford Site, Richland, Washington

Pipe Anchor (W-058) in annulus region (Figure 6 and Figure 9 with end radius in slots as used in W314, see Figure 9)

$D_{LDo} = 0.31\,in$ $D_{tubing} = 0.75\,in$ $t_{tubing} = 0.049\,in$ account for leak detector

$$A_{anchor} := \frac{\pi}{4}\cdot t_1^2 + \frac{\theta_1}{2}\cdot\left[\left(\frac{D_{S6i}}{2}\right)^2 - r_1^2\right] + \frac{\pi}{4}\cdot t_2^2 + \frac{\theta_2}{2}\cdot\left[\left(\frac{D_{S6i}}{2}\right)^2 - r_2^2\right] - \frac{\pi}{4}\cdot D_{tubing}^2 \ldots + \left[\frac{\pi}{4}\cdot\left(D_{tubing} - 2\cdot t_{tubing}\right)^2 - \frac{\pi}{4}\cdot D_{LDo}^2\right]$$

$$P_{anchor} := \pi\cdot t_1 + \theta_1\cdot\left(\frac{D_{S6i}}{2} + r_1\right) + \pi\cdot t_2 + \theta_2\cdot\left(\frac{D_{S6i}}{2} + r_2\right) + \pi\cdot D_{tubing} + \pi\cdot\left[D_{LDo} + \left(D_{tubing} - 2\cdot t_{tubing}\right)\right]$$

$A_{anchor} = 6.254\,in^2$ flow area

$P_{anchor} = 25.448\,in$ wetted perimeter $D_{H_anchor} := 4\cdot\frac{A_{anchor}}{P_{anchor}}$ $D_{H_anchor} = 0.983\,in$ hydraulic diameter for anchor

$\beta_{anchor} := \sqrt{\frac{A_{anchor}}{A_S(D_{S6i}, D_{LDo})}}$ $\beta_{anchor} = 0.571$

W058 Type A anchor plate thickness $L_{anchor} := \frac{3}{4}\cdot in$ $\alpha_{anchor} := \frac{L_{anchor}}{D_{H_anchor}}$

$\alpha_{anchor} = 0.763$ $K_L(\alpha_{anchor}) = 0.74$

$$K_{anchor_W058wr}(v,\rho,t_C,\varepsilon) := K\left(\beta_{anchor}, \alpha_{anchor}, R_e\left(D_{H_anchor}, \frac{v}{\beta_{anchor}^2}, \rho, \mu(\rho,t_C)\right), \frac{\varepsilon}{D_{H_anchor}}\right)$$

$$KK_{anchor_W058wr}(v,\rho,t_C,\varepsilon) := KK\left(\beta_{anchor}, \alpha_{anchor}, R_e\left(D_{H_anchor}, \frac{v}{\beta_{anchor}^2}, \rho, \mu(\rho,t_C)\right), \frac{\varepsilon}{D_{H_anchor}}\right)$$

$v = 10\,ft\,sec^{-1}$ $\rho = 1.3\,\frac{kg}{liter}$ $t_C = 60$ $T_F(t_C) = 140$ $\mu(\rho,t_C) = 1.197\,cP$ $\varepsilon = 5\,mil$

$K_{anchor_W058wr}(v,\rho,t_C,\varepsilon) = 11.54$

$KK_{anchor_W058wr}(v,\rho,t_C,\varepsilon) = 10.15$

**CH2MHILL Hanford Group, Inc.**

**EVALUATION ANALYSIS**

Calc. No. RPP-LJJ-005
Revision: 0
Page No. 23 of 37

Client: CH2M Hill Hanford Group, Inc.
Subject: Secondary Encasement Pipe Pressure Due to Primary Pipe Break in Waste Tank Cross-Site Transfer Piping System
Location: 200 Area - Hanford Site, Richland, Washington

WO/Job No. _____
Date: 9/12/2001 By: L. J. Julyk
Checked: 9/25/01 By: [illegible]
Revised: _____ By: _____

### 6.5.4 W-314 and Existing Pipeline Pipe Supports

**Figure 7. W-314 Pipe Support (H-14-102662) and Existing Pipeline Pipe Support (H-2-70550).**

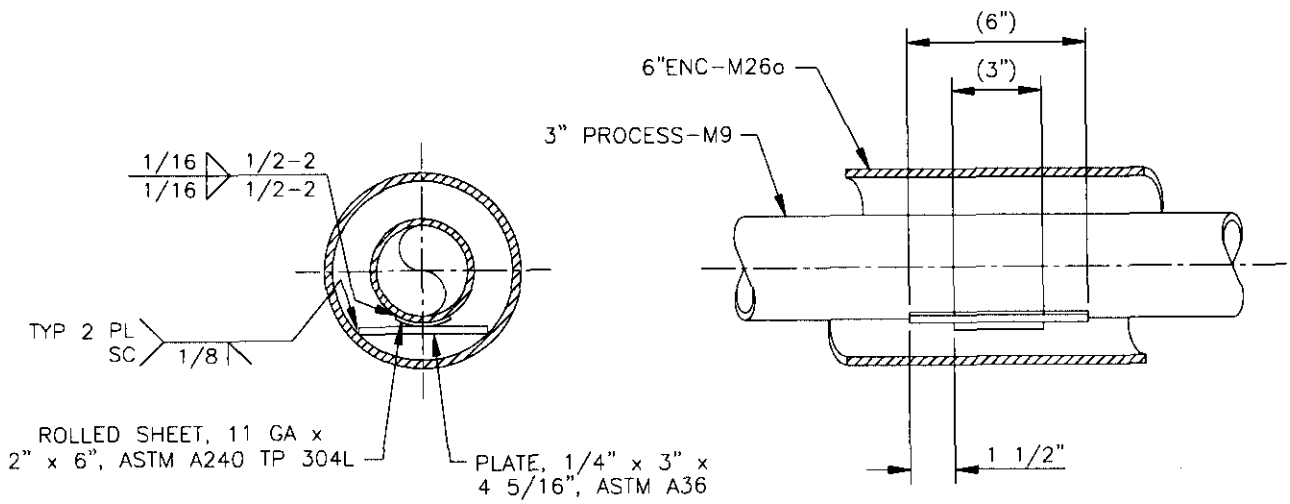

**CH2MHILL Hanford Group, Inc.**

**EVALUATION ANALYSIS**



Client: CH2M Hill Hanford Group, Inc. WO/Job No. _____
Subject: Secondary Encasement Pipe Pressure Due to Primary Pipe Break in Waste Tank Cross-Site Transfer Piping System
Date: 9/12/2001 By: L. J. Julyk
Checked: 9/25/01 By: R. F. Bellone
Location: 200 Area - Hanford Site, Richland, Washington
Revised: _____ By: _____

Pipe support (W-314) in annulus region (Figure 7) neglect effect of 11 GA x 2" x 6" rolled sheet

$t := \frac{1}{4} \cdot in$ support plate thickness (no leak detector cable)

$A_{support} := A_S(D_{S6i}, 0 \cdot in) - \frac{1}{4} \cdot in \cdot \left(4 + \frac{5}{16}\right) \cdot in$ $A_{support} = 18.191\, in^2$ flow area at pipe supports

$P_{support} := P_S(D_{S6i}, 0 \cdot in) + 2 \cdot \left(4 + \frac{5}{16}\right) \cdot in$ $P_{support} = 38.674\, in$ wetted perimeter

$D_{H_support} := 4 \cdot \frac{A_{support}}{P_{support}}$ $D_{H_support} = 1.881\, in$ hydraulic diameter for pipe support guide

$\beta_{support} := \sqrt{\frac{A_{support}}{A_S(D_{S6i}, 0 \cdot in)}}$ $\beta_{support} = 0.972$

$L_{support} := 3 \cdot in$ length of support

$\alpha_{support} := \frac{L_{support}}{D_{H_support}}$ $\alpha_{support} = 1.595$ $K_L(\alpha_{support}) = 0.262$

$$K_{support_W314}(v, \rho, t_C, \varepsilon) := K\left(\beta_{support}, \alpha_{support}, R_e\left(D_{H_support}, \frac{v}{\beta_{support}^2}, \rho, \mu(\rho, t_C)\right), \frac{\varepsilon}{D_{H_support}}\right)$$

$$KK_{support_W314}(v, \rho, t_C, \varepsilon) := KK\left(\beta_{support}, \alpha_{support}, R_e\left(D_{H_support}, \frac{v}{\beta_{support}^2}, \rho, \mu(\rho, t_C)\right), \frac{\varepsilon}{D_{H_support}}\right)$$

$v = 10\, ft\, sec^{-1}$ $\rho = 1.3 \frac{kg}{liter}$ $t_C = 60$ $T_F(t_C) = 140$ $\mu(\rho, t_C) = 1.197\, cP$ $\varepsilon = 5\, mil$

$K_{support_W314}(v, \rho, t_C, \varepsilon) = 0.086$

$K_{support_Existing}(v, \rho, t_C, \varepsilon) := K_{support_W314}(v, \rho, t_C, \varepsilon)$

$KK_{support_W314}(v, \rho, t_C, \varepsilon) = 0.118$

$KK_{support_Existing}(v, \rho, t_C, \varepsilon) := KK_{support_W314}(v, \rho, t_C, \varepsilon)$

**CH2MHILL Hanford Group, Inc.**

**EVALUATION ANALYSIS**

Calc. No. RPP-LJJ-005
Revision: 0
Page No. 25 of 37

Client: CH2M Hill Hanford Group, Inc.
WO/Job No. _____
Subject: Secondary Encasement Pipe Pressure Due to Primary Pipe Break in Waste Tank Cross-Site Transfer Piping System
Date: 9/12/2001 By: L. J. Julyk
Checked: 9/25/01 By: R. L. Schlosser
Location: 200 Area - Hanford Site, Richland, Washington
Revised: _____ By: _____

### 6.5.5 W-314 and Existing Pipeline Pipe Guides

**Figure 8. W-314 Encased Pipe Guide.** (H-14-102662)

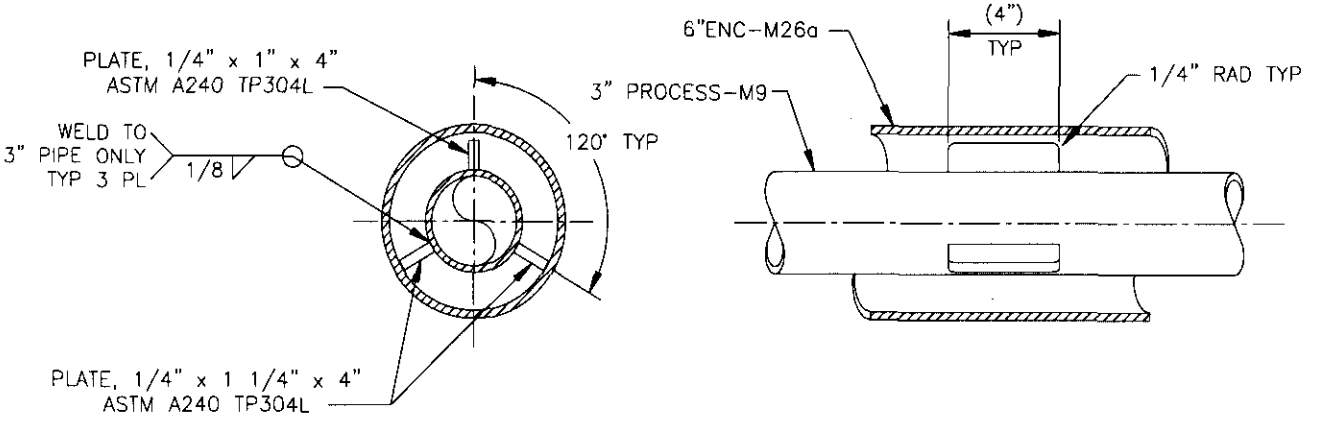

**CH2MHILL Hanford Group, Inc.**

**EVALUATION ANALYSIS**

Calc. No. RPP-LJJ-005
Revision: 0
Page No. 26 of 37

Client: CH2M Hill Hanford Group, Inc.
Subject: Secondary Encasement Pipe Pressure Due to Primary Pipe Break in Waste Tank Cross-Site Transfer Piping System
Location: 200 Area - Hanford Site, Richland, Washington

WO/Job No. _____
Date: 9/12/2001 By: L. J. Julyk
Checked: 9/25/01 By: R. Schlosser
Revised: _____ By: _____

Pipe support guide (W-314) in annulus region (Figure 8) (no leak detector cable)

$t := \frac{1}{4} \cdot in$ (3 legs) support plate thickness

$A_{guide} := A_S(D_{S6i}, 0 \cdot in) - (2 \cdot t \cdot 1.25 \cdot in + t \cdot 1 \cdot in)$ $A_{guide} = 18.394\,in^2$ flow area at pipe supports

$P_{guide} := P_S(D_{S6i}, 0 \cdot in) - 5 \cdot t + 4 \cdot 1.25 \cdot in + t + 1 \cdot 1 \cdot in$ $P_{guide} = 35.049\,in$ wetted perimeter

$D_{H_guide} := 4 \cdot \frac{A_{guide}}{P_{guide}}$ $D_{H_guide} = 2.099\,in$ hydraulic diameter for pipe support guide

$\beta_{guide} := \sqrt{\frac{A_{guide}}{A_S(D_{S6i}, 0 \cdot in)}}$ $\beta_{guide} = 0.977$

$L_{guide} := 4 \cdot in$ length of guide

$\alpha_{guide} := \frac{L_{guide}}{D_{H_guide}}$ $\alpha_{guide} = 1.905$ $K_L(\alpha_{guide}) = 0.169$

$$K_{guide_W314}(v, \rho, t_C, \varepsilon) := K\left(\beta_{guide}, \alpha_{guide}, R_e\left(D_{H_guide}, \frac{v}{\beta_{guide}^2}, \rho, \mu(\rho, t_C)\right), \frac{\varepsilon}{D_{H_guide}}\right)$$

$$KK_{guide_W314}(v, \rho, t_C, \varepsilon) := KK\left(\beta_{guide}, \alpha_{guide}, R_e\left(D_{H_guide}, \frac{v}{\beta_{guide}^2}, \rho, \mu(\rho, t_C)\right), \frac{\varepsilon}{D_{H_guide}}\right)$$

$v = 10\,ft\,sec^{-1}$ $\rho = 1.3\,\frac{kg}{liter}$ $t_C = 60$ $T_F(t_C) = 140$ $\mu(\rho, t_C) = 1.197\,cP$ $\varepsilon = 5\,mil$

$K_{guide_W314}(v, \rho, t_C, \varepsilon) = 0.082$

$KK_{guide_W314}(v, \rho, t_C, \varepsilon) = 0.111$

**CH2MHILL Hanford Group, Inc.**

**EVALUATION ANALYSIS**

Calc. No. RPP-LJJ-005
Revision: 0
Page No. 27 of 37

Client: CH2M Hill Hanford Group, Inc.
Subject: Secondary Encasement Pipe Pressure Due to Primary Pipe Break in Waste Tank Cross-Site Transfer Piping System
Location: 200 Area - Hanford Site, Richland, Washington

WO/Job No.
Date: 9/12/2001 By: L. J. Julyk
Checked: 9/25/01 By:
Revised: By:

Pipe support guide (Existing Piping, H-2-70550) in annulus region (no leak detector cable)

$t := \frac{3}{8} \cdot in$ (only 2 legs) support plate thickness

$A_{guide} := A_S(D_{S6i}, 0 \cdot in) - (2 \cdot t \cdot 1.25 \cdot in)$ $A_{guide} = 18.332\,in^2$ flow area at pipe supports

$P_{guide} := P_S(D_{S6i}, 0 \cdot in) - 4 \cdot t + 4 \cdot 1.25 \cdot in$ $P_{guide} = 33.549\,in$ wetted perimeter

$D_{H_guide} := 4 \cdot \frac{A_{guide}}{P_{guide}}$ $D_{H_guide} = 2.186\,in$ hydraulic diameter for pipe support guide

$\beta_{guide} := \sqrt{\frac{A_{guide}}{A_S(D_{S6i}, 0 \cdot in)}}$ $\beta_{guide} = 0.975$ $L_{guide} := 4 \cdot in$ length of guide

$\alpha_{guide} := \frac{L_{guide}}{D_{H_guide}}$ $\alpha_{guide} = 1.83$ $K_L(\alpha_{guide}) = 0.184$

$$K_{guide_Existing}(v, \rho, t_C, \varepsilon) := K\left(\beta_{guide}, \alpha_{guide}, R_e\left(D_{H_guide}, \frac{v}{\beta_{guide}^2}, \rho, \mu(\rho, t_C)\right), \frac{\varepsilon}{D_{H_guide}}\right)$$

$$KK_{guide_Existing}(v, \rho, t_C, \varepsilon) := KK\left(\beta_{guide}, \alpha_{guide}, R_e\left(D_{H_guide}, \frac{v}{\beta_{guide}^2}, \rho, \mu(\rho, t_C)\right), \frac{\varepsilon}{D_{H_guide}}\right)$$

$v = 10\,ft\,sec^{-1}$ $\rho = 1.3\,\frac{kg}{liter}$ $t_C = 60$ $T_F(t_C) = 140$ $\mu(\rho, t_C) = 1.197\,cP$ $\varepsilon = 5\,mil$

$K_{guide_Existing}(v, \rho, t_C, \varepsilon) = 0.083$

$KK_{guide_Existing}(v, \rho, t_C, \varepsilon) = 0.113$

**CH2MHILL Hanford Group, Inc.**

**EVALUATION ANALYSIS**

Calc. No. RPP-LJJ-005
Revision: 0
Page No. 28 of 37

Client: CH2M Hill Hanford Group, Inc.
Subject: Secondary Encasement Pipe Pressure Due to Primary Pipe Break in Waste Tank Cross-Site Transfer Piping System
Location: 200 Area - Hanford Site, Richland, Washington

WO/Job No. _____
Date: 9/12/2001 By: L. J. Julyk
Checked: 9/25/01 By: R. H. [illegible]
Revised: _____ By: _____

### 6.5.6 W-314 Pipe Anchor

**Figure 9a. W-314 Encased Pipe Anchor.** (H-14-102662)

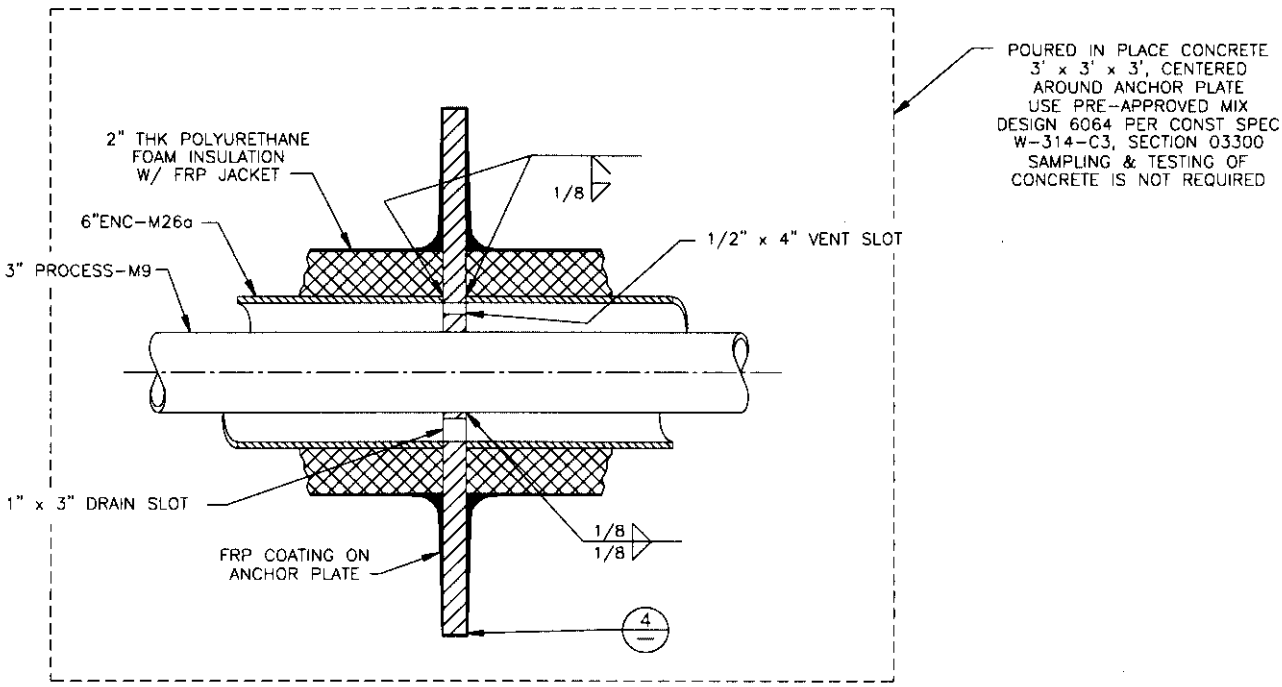

**CH2MHILL Hanford Group, Inc.**

**EVALUATION ANALYSIS**

Calc. No. RPP-LJJ-005
Revision: 0
Page No. 29 of 37

Client: CH2M Hill Hanford Group, Inc.
Subject: Secondary Encasement Pipe Pressure Due to Primary Pipe Break in Waste Tank Cross-Site Transfer Piping System
Location: 200 Area - Hanford Site, Richland, Washington

WO/Job No.
Date: 9/12/2001 By: L. J. Julyk
Checked: 9/25/01 By:
Revised: By:

**Figure 9b. W-314 Encased Pipe Anchor.** (H-14-102662)

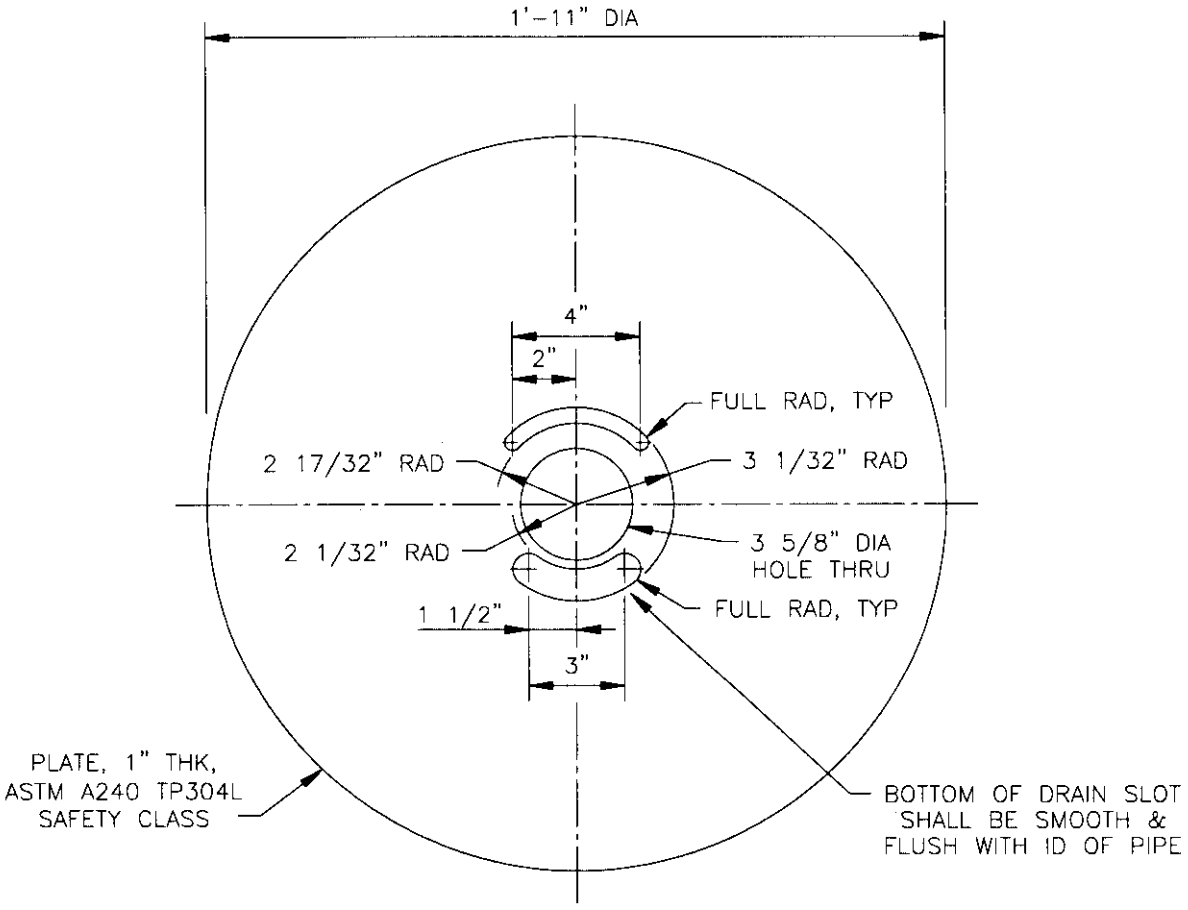

**CH2MHILL Hanford Group, Inc.**

**EVALUATION ANALYSIS**

Calc. No. RPP-LJJ-005
Revision: 0
Page No. 30 of 37

Client: CH2M Hill Hanford Group, Inc.
Subject: Secondary Encasement Pipe Pressure Due to Primary Pipe Break in Waste Tank Cross-Site Transfer Piping System
Location: 200 Area - Hanford Site, Richland, Washington

WO/Job No. _____
Date: 9/12/2001 By: L. J. Julyk
Checked: 9/25/01 By: [signature]
Revised: _____ By: _____

(no leak detector cable)

Pipe anchor (W-314) in annulus region (Figure 9)

$r_1 := \left(2 + \frac{17}{32}\right) \cdot in$ $\quad t_1 := \frac{D_{S6i}}{2} - r_1$ $\quad L_1 := 4 \cdot in$ $\quad \theta_1 := 2 \cdot asin\left[\frac{L_1}{\left(\frac{D_{S6i}}{2} + r_1\right)}\right]$

$r_1 = 2.531\,in$ $\quad t_1 = 0.501\,in$ $\quad \theta_1 = 91.934\,deg$

$r_2 := \left(2 + \frac{1}{32}\right) \cdot in$ $\quad t_2 := \frac{D_{S6i}}{2} - r_2$ $\quad L_2 := 3 \cdot in$ $\quad \theta_2 := 2 \cdot asin\left[\frac{L_2}{\left(\frac{D_{S6i}}{2} + r_2\right)}\right]$

$r_2 = 2.031\,in$ $\quad t_2 = 1.001\,in$ $\quad \theta_2 = 72.662\,deg$

$A_{anchor} := \frac{\pi}{4} \cdot t_1^2 + \frac{\theta_1}{2} \cdot \left[\left(\frac{D_{S6i}}{2}\right)^2 - r_1^2\right] + \frac{\pi}{4} \cdot t_2^2 + \frac{\theta_2}{2} \cdot \left[\left(\frac{D_{S6i}}{2}\right)^2 - r_2^2\right]$ $\quad A_{anchor} = 6.437\,in^2$ flow area

$P_{anchor} := \pi \cdot t_1 + \theta_1 \cdot \left(\frac{D_{S6i}}{2} + r_1\right) + \pi \cdot t_2 + \theta_2 \cdot \left(\frac{D_{S6i}}{2} + r_2\right)$ $\quad P_{anchor} = 20.069\,in$ wetted perimeter

$D_{H_anchor} := 4 \cdot \frac{A_{anchor}}{P_{anchor}}$ $\quad D_{H_anchor} = 1.283\,in$ hydraulic diameter for anchor

$\beta_{anchor} := \sqrt{\frac{A_{anchor}}{A_S(D_{S6i}, 0 \cdot in)}}$ $\quad \beta_{anchor} = 0.578$ $\quad L_{anchor} := 1 \cdot in$ $\quad \alpha_{anchor} := \frac{L_{anchor}}{D_{H_anchor}}$ $\quad \alpha_{anchor} = 0.779$

$K_L(\alpha_{anchor}) = 0.726$

$K_{anchor_W314}(v, \rho, t_C, \varepsilon) := K\left(\beta_{anchor}, \alpha_{anchor}, R_e\left(D_{H_anchor}, \frac{v}{\beta_{anchor}^2}, \rho, \mu(\rho, t_C)\right), \frac{\varepsilon}{D_{H_anchor}}\right)$

$KK_{anchor_W314}(v, \rho, t_C, \varepsilon) := KK\left(\beta_{anchor}, \alpha_{anchor}, R_e\left(D_{H_anchor}, \frac{v}{\beta_{anchor}^2}, \rho, \mu(\rho, t_C)\right), \frac{\varepsilon}{D_{H_anchor}}\right)$

$v = 10\,ft\,sec^{-1}$ $\quad \rho = 1.3\,\frac{kg}{liter}$ $\quad t_C = 60$ $\quad T_F(t_C) = 140$ $\quad \mu(\rho, t_C) = 1.197\,cP$ $\quad \varepsilon = 5\,mil$

$K_{anchor_W314}(v, \rho, t_C, \varepsilon) = 10.7$ new piplines

$KK_{anchor_W314}(v, \rho, t_C, \varepsilon) = 9.37$

$K_{anchor_Existing}(v, \rho, t_C, \varepsilon) := 0$ no flow restricting anchors for existing pipelines

$KK_{anchor_Existing}(v, \rho, t_C, \varepsilon) := 0$

### 6.5.7 Loss at Drain Exit

Exit to atmosphere at drain (sudden enlargement, CRANE 1988, Eqn 2-9.1)

$$K_E(\beta) := \left(1 - \beta^2\right)^2 \qquad \beta := 0 \qquad K_E := K_E(\beta) \qquad K_E = 1$$

Abrupt contraction from annulus region to drain pipe (Blevins 1984, Case 11 of Table 6-7 rewritten in terms of upstream flow velocity, see also CRANE 1988, Eqn 2-11)

$$\beta_D(D_{Di}, D_{DLo}) := \sqrt{\frac{A_f(D_{Di})}{A_S(D_{S6i}, D_{DLo})}}$$

$$K_D(D_{Di}, D_{DLo}) := \frac{1}{2} \cdot \left(1 - \beta_D(D_{Di}, D_{DLo})^2\right) \cdot \frac{1}{\beta_D(D_{Di}, D_{DLo})^4}$$

| 1-in. drain | 1 1/2-in. drain | 2-in. drain | $D_{LDo} = 0.31$ in |
|---|---|---|---|
| $\beta_D(D_{D1i}, D_{LDo}) = 0.212$ | $\beta_D(D_{D1.5i}, D_{LDo}) = 0.326$ | $\beta_D(D_{D2i}, D_{LDo}) = 0.418$ | |
| $K_D(D_{D1i}, D_{LDo}) = 235.5$ | $K_D(D_{D1.5i}, D_{LDo}) = 39.7$ | $K_D(D_{D2i}, D_{LDo}) = 13.5$ | |
| | | | $D_{LDo} := D_{LDo_W314}$ |
| $\beta_D(D_{D1i}, D_{LDo}) = 0.212$ | $\beta_D(D_{D1.5i}, D_{LDo}) = 0.325$ | $\beta_D(D_{D2i}, D_{LDo}) = 0.417$ | |
| $K_D(D_{D1i}, D_{LDo}) = 237.4$ | $K_D(D_{D1.5i}, D_{LDo}) = 40.1$ | $K_D(D_{D2i}, D_{LDo}) = 13.6$ | |

### 6.5.8 Loss at Break

$$A_{crack}(L_c, W_c) := L_c \cdot W_c$$

$$P_{crack}(L_c, W_c) := 2 \cdot (L_c + W_c)$$

$$D_{H_crack}(L_c, W_c) := 4 \cdot \frac{A_{crack}(L_c, W_c)}{P_{crack}(L_c, W_c)} \qquad \beta_{c1}(L_c, W_c) := \sqrt{\frac{A_{crack}(L_c, W_c)}{A_P}}$$

$$\alpha_c(L_c, W_c) := \frac{t_P}{D_{H_crack}(L_c, W_c)} \qquad \beta_{c2}(L_c, W_c, D_{DLo}) := \sqrt{\frac{A_{crack}(L_c, W_c)}{A_S(D_{S6i}, D_{DLo})}}$$

resulting $k_{crack}$ based on flow velocity *through the crack* for thick-edged orifice with $\alpha = L/D_{oH} > 0.015$, $Re = \frac{\rho}{\mu} \cdot D_H \cdot V_c > 10^5$

per Lyons 1982, Eqn 4, pg. 158

$$k_{crack}(\beta_1, \beta_2, \alpha, Re, \eta) := \left[\underbrace{0.5 \cdot \left(1 - \beta_1^2\right)}_{K_{entrance}} + \underbrace{K_L(\alpha) \cdot \sqrt{1 - \beta_1^2} \cdot \left(1 - \beta_2^2\right)}_{K_{contraction}} + \underbrace{\left(1 - \beta_2^2\right)^2}_{K_{enlargement}} + \underbrace{f(Re, \eta) \cdot \alpha}_{K_{length}}\right]$$

**CH2MHILL Hanford Group, Inc.**

**EVALUATION ANALYSIS**

Calc. No. RPP-LJJ-005
Revision: 0
Page No. 32 of 37

Client: CH2M Hill Hanford Group, Inc.
Subject: Secondary Encasement Pipe Pressure Due to Primary Pipe Break in Waste Tank Cross-Site Transfer Piping System
Location: 200 Area - Hanford Site, Richland, Washington

WO/Job No. _____
Date: 9/12/2001 By: L. J. Julyk
Checked: 9/25/01 By: R. Schlosser
Revised: _____ By: _____

$$K_{crack}(L_c, W_c, v_c, \rho, t_C, \varepsilon_c, D_{LDo}) := \left| \begin{array}{l} \beta_1 \leftarrow \beta_{c1}(L_c, W_c) \\ \beta_2 \leftarrow \beta_{c2}(L_c, W_c, D_{LDo}) \\ \alpha \leftarrow \alpha_c(L_c, W_c) \\ D_H \leftarrow D_{H_crack}(L_c, W_c) \\ Re \leftarrow R_e(D_H, v_c, \rho, \mu(\rho, t_C)) \\ \eta \leftarrow \dfrac{\varepsilon_c}{D_H} \\ k_{crack}(\beta_1, \beta_2, \alpha, Re, \eta) \end{array} \right.$$

per Idelchik 1994, Diagram 4-12, pg. 219

$$kk_{crack}(\beta_1, \beta_2, \alpha, Re, \eta) := \left[0.5 \cdot \left(1 - \beta_1^2\right)^{0.75} + KK_L(\alpha) \cdot \left(1 - \beta_1^2\right)^{0.375} \cdot \left(1 - \beta_2^2\right) + \left(1 - \beta_2^2\right)^2 + f(Re, \eta) \cdot \alpha\right]$$

$$KK_{crack}(L_c, W_c, v_c, \rho, t_C, \varepsilon_c, D_{LDo}) := \left| \begin{array}{l} \beta_1 \leftarrow \beta_{c1}(L_c, W_c) \\ \beta_2 \leftarrow \beta_{c2}(L_c, W_c, D_{LDo}) \\ \alpha \leftarrow \alpha_c(L_c, W_c) \\ D_H \leftarrow D_{H_crack}(L_c, W_c) \\ Re \leftarrow R_e(D_H, v_c, \rho, \mu(\rho, t_C)) \\ \eta \leftarrow \dfrac{\varepsilon_c}{D_H} \\ kk_{crack}(\beta_1, \beta_2, \alpha, Re, \eta) \end{array} \right.$$

For sharp-edged orifice (Idelchik 1994, pg. 218, $\alpha = L/D_{oH} < 0.015$, $Re = \frac{\rho}{\mu} \cdot D_H \cdot V_c > 10^4$)

$$kkk_{crack}(\beta_1, \beta_2, \alpha, Re, \eta) := \left[0.707 \cdot \left(1 - \beta_1^2\right)^{0.375} + \left(1 - \beta_2^2\right)\right]^2$$

**CH2MHILL Hanford Group, Inc.**

**EVALUATION ANALYSIS**



Client: CH2M Hill Hanford Group, Inc. WO/Job No. _____
Subject: Secondary Encasement Pipe Pressure Due to Primary Pipe Break in Waste Tank Cross-Site Transfer Piping System
Date: 9/12/2001 By: L. J. Julyk
Checked: 9/25/01 By: [illegible]
Location: 200 Area - Hanford Site, Richland, Washington
Revised: _____ By: _____

$$KKK_{crack}(L_c, W_c, v_c, \rho, t_C, \varepsilon_c, D_{LDo}) := \left| \begin{array}{l} \beta_1 \leftarrow \beta_{c1}(L_c, W_c) \\ \beta_2 \leftarrow \beta_{c2}(L_c, W_c, D_{LDo}) \\ \alpha \leftarrow \alpha_c(L_c, W_c) \\ D_H \leftarrow D_{H_crack}(L_c, W_c) \\ Re \leftarrow R_e(D_H, v_c, \rho, \mu(\rho, t_C)) \\ \eta \leftarrow \dfrac{\varepsilon_c}{D_H} \\ kkk_{crack}(\beta_1, \beta_2, \alpha, Re, \eta) \end{array} \right.$$

Assumed Crack Size Parameters $D_{LDo} = 0\,in$

$L_c := 10 \cdot in$ $L_c = 10\,in$ crack length

$W_c := 0.1 \cdot in$ crack opening width

$A_{crack}(L_c, W_c) = 1\,in^2$ $\beta_{c1}(L_c, W_c) = 0.368$ $\beta_{c2}(L_c, W_c, D_{LDo}) = 0.228$

$P_{crack}(L_c, W_c) = 20.2\,in$

$D_{H_crack}(L_c, W_c) = 0.198\,in$ effective hydraulic diameter $\alpha_c(L_c, W_c) = 1.091$ $L/D_H$ ratio

$\varepsilon_c := 1 \cdot mil$ primary pipe through crack roughness

$V_c := 10 \cdot \frac{ft}{sec}$ $\rho := 1.3 \cdot \frac{kg}{liter}$ $t_C := 40$ $T_F(t_C) = 104$ $\mu(\rho, t_C) = 1.575\,cP$

$R_e(D_{H_crack}(L_c, W_c), V_c, \rho, \mu(\rho, t_C)) = 1 \times 10^4$ Reynolds number for flow through crack

thick-edged orifice with $\alpha = L/D_{oH} > 0.015$ $\alpha_c(L_c, W_c) = 1.091$ > 0.15 => thick-edged orifice

Lyons 1982, Eqn 4, pg. 158

$K_{crack}(L_c, W_c, V_c, \rho, t_C, \varepsilon_c, D_{LDo}) = 1.809$

Idelchik 1994, Diagram 4-12, pg. 219

$KK_{crack}(L_c, W_c, V_c, \rho, t_C, \varepsilon_c, D_{LDo}) = 1.586$

sharp-edged orifice (Idelchik 1994, pg. 218, $\alpha = L/D_{oH} < 0.015$)

$KKK_{crack}(L_c, W_c, V_c, \rho, t_C, \varepsilon_c, D_{LDo}) = 2.617$

**CH2MHILL Hanford Group, Inc.**

**EVALUATION ANALYSIS**



Client: CH2M Hill Hanford Group, Inc. WO/Job No. _____
Subject: Secondary Encasement Pipe Pressure Due to Primary Pipe Break in Waste Tank Cross-Site Transfer Piping System
Date: 9/12/2001 By: L. J. Julyk
Checked: 9/25/01 By: R. Schlosser
Location: 200 Area - Hanford Site, Richland, Washington
Revised: _____ By: _____

$v := 10 \cdot \frac{ft}{sec}$ $\rho := 1.3 \cdot \frac{kg}{liter}$ $t_C := 60$ $T_F(t_C) = 140$ $\mu(\rho, t_C) = 1.197\,cP$ $\varepsilon := 5 \cdot mil$

| $F_K$ = | Lyons 1982, Eqn 4, pg. 158 | Idelchik 1994, Diagram 4-12, pg. 219 | |
|---|---|---|---|
| 0 | $K_{support_Existing}(v,\rho,t_C,\varepsilon) = 0.086$ | $KK_{support_Existing}(v,\rho,t_C,\varepsilon) = 0.118$ | no leak detection cable |
| | $K_{guide_Existing}(v,\rho,t_C,\varepsilon) = 0.083$ | $KK_{guide_Existing}(v,\rho,t_C,\varepsilon) = 0.113$ | |
| | $K_{anchor_Existing}(v,\rho,t_C,\varepsilon) = 0$ | $KK_{anchor_Existing}(v,\rho,t_C,\varepsilon) = 0$ | |
| 1,2 | $K_{support_W058}(v,\rho,t_C,\varepsilon) = 0.00095$ | $KK_{support_W058}(v,\rho,t_C,\varepsilon) = 0.0015$ | with leak detection cable |
| | $K_{guide_W058}(v,\rho,t_C,\varepsilon) = 2.39$ | $KK_{guide_W058}(v,\rho,t_C,\varepsilon) = 2.68$ | |
| | $K_{anchor_W058}(v,\rho,t_C,\varepsilon) = 17.69$ | $KK_{anchor_W058}(v,\rho,t_C,\varepsilon) = 15.22$ | 3/4-in. thk no radius in slots (1) |
| | $K_{anchor_W058wr}(v,\rho,t_C,\varepsilon) = 11.54$ | $KK_{anchor_W058wr}(v,\rho,t_C,\varepsilon) = 10.15$ | 3/4-in. thk with radius in slots (2) |
| 3 | $K_{support_W314}(v,\rho,t_C,\varepsilon) = 0.086$ | $KK_{support_W314}(v,\rho,t_C,\varepsilon) = 0.118$ | no leak detection cable |
| | $K_{guide_W314}(v,\rho,t_C,\varepsilon) = 0.082$ | $KK_{guide_W314}(v,\rho,t_C,\varepsilon) = 0.111$ | |
| | $K_{anchor_W314}(v,\rho,t_C,\varepsilon) = 10.7$ | $KK_{anchor_W314}(v,\rho,t_C,\varepsilon) = 9.37$ | 1-in. thk with radius in slots |

For simplicity, combine the K-resistance factor of support with every 4th guide to obtain an effective average K-resistance

$$K_{guide}(v,\rho,t_C,\varepsilon,F_K) := \begin{cases} \frac{4}{5} \cdot K_{guide_Existing}(v,\rho,t_C,\varepsilon) + \frac{1}{5} \cdot K_{support_Existing}(v,\rho,t_C,\varepsilon) & \text{if } F_K = 0 \\ \frac{4}{5} \cdot K_{guide_W058}(v,\rho,t_C,\varepsilon) + \frac{1}{5} \cdot K_{support_W058}(v,\rho,t_C,\varepsilon) & \text{if } F_K = 1 \vee F_K = 2 \\ \frac{4}{5} \cdot K_{guide_W314}(v,\rho,t_C,\varepsilon) + \frac{1}{5} \cdot K_{support_W314}(v,\rho,t_C,\varepsilon) & \text{otherwise} \end{cases}$$

$$KK_{guide}(v,\rho,t_C,\varepsilon,F_K) := \begin{cases} \frac{4}{5} \cdot KK_{guide_Existing}(v,\rho,t_C,\varepsilon) + \frac{1}{5} \cdot KK_{support_Existing}(v,\rho,t_C,\varepsilon) & \text{if } F_K = 0 \\ \frac{4}{5} \cdot KK_{guide_W058}(v,\rho,t_C,\varepsilon) + \frac{1}{5} \cdot KK_{support_W058}(v,\rho,t_C,\varepsilon) & \text{if } F_K = 1 \vee F_K = 2 \\ \frac{4}{5} \cdot KK_{guide_W314}(v,\rho,t_C,\varepsilon) + \frac{1}{5} \cdot KK_{support_W314}(v,\rho,t_C,\varepsilon) & \text{otherwise} \end{cases}$$

| | | | |
|---|---|---|---|
| Existing | $F_K := 0$ | $K_{guide}(v,\rho,t_C,\varepsilon,F_K) = 0.083$ | $KK_{guide}(v,\rho,t_C,\varepsilon,F_K) = 0.114$ |
| W058 | $F_K := 1$ | $K_{guide}(v,\rho,t_C,\varepsilon,F_K) = 1.912$ | $KK_{guide}(v,\rho,t_C,\varepsilon,F_K) = 2.144$ |
| | $F_K := 2$ | $K_{guide}(v,\rho,t_C,\varepsilon,F_K) = 1.912$ | $KK_{guide}(v,\rho,t_C,\varepsilon,F_K) = 2.144$ |
| W314 | $F_K := 3$ | $K_{guide}(v,\rho,t_C,\varepsilon,F_K) = 0.083$ | $KK_{guide}(v,\rho,t_C,\varepsilon,F_K) = 0.112$ |

**CH2MHILL Hanford Group, Inc.**

**EVALUATION ANALYSIS**

Calc. No. RPP-LJJ-005
Revision: 0
Page No. 35 of 37

Client: CH2M Hill Hanford Group, Inc. WO/Job No. _____
Subject: Secondary Encasement Pipe Pressure Due to Primary Pipe Break in Waste Tank Cross-Site Transfer Piping System
Date: 9/12/2001 By: L. J. Julyk
Checked: 9/25/01 By: [illegible]
Location: 200 Area - Hanford Site, Richland, Washington
Revised: _____ By: _____

$$K_{anchor}(v,\rho,t_C,\varepsilon,F_K) := \begin{cases} K_{anchor_Existing}(v,\rho,t_C,\varepsilon) & \text{if } F_K = 0 \\ K_{anchor_W058}(v,\rho,t_C,\varepsilon) & \text{if } F_K = 1 \\ K_{anchor_W058wr}(v,\rho,t_C,\varepsilon) & \text{if } F_K = 2 \\ K_{anchor_W314}(v,\rho,t_C,\varepsilon) & \text{otherwise} \end{cases}$$

no radius in slots

with radius in slots

$$KK_{anchor}(v,\rho,t_C,\varepsilon,F_K) := \begin{cases} KK_{anchor_Existing}(v,\rho,t_C,\varepsilon) & \text{if } F_K = 0 \\ KK_{anchor_W058}(v,\rho,t_C,\varepsilon) & \text{if } F_K = 1 \\ KK_{anchor_W058wr}(v,\rho,t_C,\varepsilon) & \text{if } F_K = 2 \\ KK_{anchor_W314}(v,\rho,t_C,\varepsilon) & \text{otherwise} \end{cases}$$

no radius in slots

with radius in slots

| | | | | |
|---|---|---|---|---|
| Existing | $F_K := 0$ | $K_{anchor}(v,\rho,t_C,\varepsilon,F_K) = 0$ | $KK_{anchor}(v,\rho,t_C,\varepsilon,F_K) = 0$ | |
| W058 | $F_K := 1$ | $K_{anchor}(v,\rho,t_C,\varepsilon,F_K) = 17.686$ | $KK_{anchor}(v,\rho,t_C,\varepsilon,F_K) = 15.217$ | 3/4-in. thk no radius in slots |
| | $F_K := 2$ | $K_{anchor}(v,\rho,t_C,\varepsilon,F_K) = 11.537$ | $KK_{anchor}(v,\rho,t_C,\varepsilon,F_K) = 10.147$ | 3/4-in. thk with radius in slots |
| W314 | $F_K := 3$ | $K_{anchor}(v,\rho,t_C,\varepsilon,F_K) = 10.696$ | $KK_{anchor}(v,\rho,t_C,\varepsilon,F_K) = 9.373$ | 1-in. thk with radius in slots |

### 6.5.9 Spacing of Anchors and Guides

| $F_K =$ | 0 | 1,2 | 3 | |
|---|---|---|---|---|
| | $L_{i_Existing} := 9 \cdot ft$ | $L_{i_W058} := 12 \cdot ft$ | $L_{i_W314} := 9 \cdot ft$ | spacing of primary pipe guides |
| | $\lambda_{Existing} := 10000$ | $\lambda_{W058} := 46$ | $\lambda_{W314} := 15$ | spacing parameter for anchors |
| | $D_{LDo_Existing} := 0 \cdot in$ | $D_{LDo_W058} := 0.31 \cdot in$ | $D_{LDo_W314} := 0 \cdot in$ | diameter of leak detector cable (W-058 only) |
| | $F_{RD_Existing} := 0$ | $F_{RD_W058} := 1$ | $F_{RD_W314} := 0$ | rupture disk switch<br>$F_{RD} = 1$ for rupture disk<br>$F_{RD} = 0$ no rupture disk |

$$L_i := \begin{pmatrix} L_{i_Existing} \\ L_{i_W058} \\ L_{i_W058} \\ L_{i_W314} \end{pmatrix} \quad \lambda := \begin{pmatrix} \lambda_{Existing} \\ \lambda_{W058} \\ \lambda_{W058} \\ \lambda_{W314} \end{pmatrix} \quad F_{RD} := \begin{pmatrix} F_{RD_Existing} \\ F_{RD_W058} \\ F_{RD_W058} \\ F_{RD_W314} \end{pmatrix} \quad D_{LDo} := \begin{pmatrix} D_{LDo_Existing} \\ D_{LDo_W058} \\ D_{LDo_W058} \\ D_{LDo_W314} \end{pmatrix}$$

Existing
W058
W314

$$L_j := \overrightarrow{(\lambda \cdot L_i)} \qquad L_j = \begin{pmatrix} 9 \times 10^4 \\ 552 \\ 552 \\ 135 \end{pmatrix} ft$$

Existing
W058 (Type A)
W314

approximate spacing of primary pipe anchors

**CH2MHILL Hanford Group, Inc.**

**EVALUATION ANALYSIS**

Calc. No. RPP-LJJ-005
Revision: 0
Page No. 36 of 37

Client: CH2M Hill Hanford Group, Inc.
Subject: Secondary Encasement Pipe Pressure Due to Primary Pipe Break in Waste Tank Cross-Site Transfer Piping System
Location: 200 Area - Hanford Site, Richland, Washington

WO/Job No. _____
Date: 9/12/2001 By: L. J. Julyk
Checked: 9/25/01 By: [illegible]
Revised: _____ By: _____

Determination of number of upstream and downstream guide supports and anchors relative to break location for encasement section under consideration. Sample results given below are for specified parameters. Actual values are calculated during solution as appropriate.

$L_o := 0 \cdot ft \qquad L_S := 1000 \cdot ft \qquad x_B := 300 \cdot ft + L_o$

$$J(F_K, L_o, x_B) := \begin{cases} n \leftarrow \text{round}\left(\dfrac{x_B - L_o}{\lambda_{F_K} \cdot L_{i_{F_K}}}\right) \\ 0 \text{ if } n \le 0 \\ n \text{ otherwise} \end{cases}$$

number of anchors within secondary encasement section under consideration before break

$F_K := 0 \quad J(F_K, L_o, x_B) = 0$

$F_K := 1 \quad J(F_K, L_o, x_B) = 1$

$F_K := 3 \quad J(F_K, L_o, x_B) = 2$

$$I(F_K, L_o, x_B) := \begin{cases} n \leftarrow \text{round}\left(\dfrac{x_B - L_o}{L_{i_{F_K}}} - J(F_K, L_o, x_B)\right) \\ 0 \text{ if } n \le 0 \\ n \text{ otherwise} \end{cases}$$

number of guide supports within secondary encasement section under consideration before break

$F_K := 0 \quad I(F_K, L_o, x_B) = 33$

$F_K := 1 \quad I(F_K, L_o, x_B) = 24$

$F_K := 3 \quad I(F_K, L_o, x_B) = 31$

$$N(F_K, L_o, L_S, x_B) := \begin{cases} n \leftarrow \text{round}\left[\dfrac{L_S - (x_B - L_o)}{\lambda_{F_K} \cdot L_{i_{F_K}}}\right] \\ 0 \text{ if } n \le 0 \\ n \text{ otherwise} \end{cases}$$

number of anchors within secondary encasement section under consideration after break

$F_K := 0 \quad N(F_K, L_o, L_S, x_B) = 0$

$F_K := 1 \quad N(F_K, L_o, L_S, x_B) = 1$

$F_K := 3 \quad N(F_K, L_o, L_S, x_B) = 5$

$$M(F_K, L_o, L_S, x_B) := \begin{cases} n \leftarrow \text{round}\left[\dfrac{L_S - (x_B - L_o)}{L_{i_{F_K}}} - N(F_K, L_o, L_S, x_B)\right] \\ 0 \text{ if } n \le 0 \\ n \text{ otherwise} \end{cases}$$

number of guide supports within secondary encasement section under consideration after break

$F_K := 0 \quad M(F_K, L_o, L_S, x_B) = 78$

$F_K := 1 \quad M(F_K, L_o, L_S, x_B) = 57$

$F_K := 3 \quad M(F_K, L_o, L_S, x_B) = 73$

### 6.5.10 Equivalent Pipe Length for Drain Pipe and Rupture Disk

$L_D(D_{Di}, F_K) := 3 \cdot ft + 1 \cdot 30 \cdot D_{Di} + 75 \cdot D_{Di} \cdot FRD_{F_K}$

approximate equivalent length of drain pipe including one standard 90° elbows (L/D=30 per CRANE 1988) and rupture disk (L/D=75 per BS&B 2001)

Annulus Flow Area and Hydraulic Diameter

$A_{S6}(F_K) := A_S(D_{S6i}, D_{LDo_{F_K}}) \qquad D_{H_a6}(F_K) := D_{H_annulus}(D_{S6i}, D_{LDo_{F_K}})$

**CH2MHILL Hanford Group, Inc.**

**EVALUATION ANALYSIS**

Calc. No. RPP-LJJ-005
Revision: 0
Page No. 37 of 37

Client: CH2M Hill Hanford Group, Inc.
Subject: Secondary Encasement Pipe Pressure Due to Primary Pipe Break in Waste Tank Cross-Site Transfer Piping System
Location: 200 Area - Hanford Site, Richland, Washington

WO/Job No. _____
Date: 9/12/2001 By: L. J. Julyk
Checked: 9/25/01 By: [illegible]
Revised: _____ By: _____

| | | annulus hydraulic dia. | annulus flow area | annulus drain effective pipe length | |
|---|---|---|---|---|---|
| Existing | $F_K := 0$ | $D_{H_a6}(F_K) = 2.565\,in$ | $A_{S6}(F_K) = 19.269\,in^2$ | $L_D(D_{D1.5i}, F_K) = 7\,ft$ | $L_D(D_{D2i}, F_K) = 8.2\,ft$ |
| W058 | $F_K := 1$ | $D_{H_a6}(F_K) = 2.475\,in$ | $A_{S6}(F_K) = 19.194\,in^2$ | $L_D(D_{D1.5i}, F_K) = 17.1\,ft$ | $L_D(D_{D2i}, F_K) = 21.1\,ft$ |
| | $F_K := 2$ | $D_{H_a6}(F_K) = 2.475\,in$ | $A_{S6}(F_K) = 19.194\,in^2$ | $L_D(D_{D1.5i}, F_K) = 17.1\,ft$ | $L_D(D_{D2i}, F_K) = 21.1\,ft$ |
| W314 | $F_K := 3$ | $D_{H_a6}(F_K) = 2.565\,in$ | $A_{S6}(F_K) = 19.269\,in^2$ | $L_D(D_{D1.5i}, F_K) = 7\,ft$ | $L_D(D_{D2i}, F_K) = 8.2\,ft$ |

### 6.6 Elevation at Break

Elevation at assumed break location $x_B$ relative to transfer pump elevation

$$H_B(L_o, H_o, L_S, H_S, x_B) := \left[\left(\frac{H_S - H_o}{L_S}\right)\cdot(x_B - L_o) + H_o\right]$$

This page intentionally left blank

# APPENDIX B

# RCSTS ENCASEMENT PIPE MAXIMUM PRESSURE ANALYSIS

This page intentionally left blank

# APPENDIX B0

# RCSTS ENCASEMENT PIPE MAXIMUM PRESSURE ANALYSIS

# BLOCKED TRANSFER ROUTE

This page intentionally left blank

**CH2MHILL Hanford Group, Inc.**

**EVALUATION ANALYSIS**

Calc. No. RPP-LJJ-005
Revision: 0
Page No. 1 of 31

Client: CH2M Hill Hanford Group, Inc.
Subject: Secondary Encasement Pipe Pressure Due to Primary Pipe Break in Waste Tank Cross-Site Transfer Piping System
Location: 200 Area - Hanford Site, Richland, Washington

WO/Job No. _____
Date: 9/12/2001 By: L. J. Julyk
Checked: 9/25/01 By: [illegible]
Revised: _____ By: _____

Reference:C:\WINDOWS\Desktop\Cross-Site Encasement Calcs\pipebreak.mcd(R)

**Input Parameter Data**

**RCSTS Elevation and Equivalent Pipe Length Parameters**

RCSTS Elevations

$Z_{SY102} := 668.62 \cdot ft$ elevation at SY102 Transfer Pump Pit

$Z_{SYAin} := 671.2 \cdot ft$ elevation at SY-A-in Valve Pit

$Z_{SYBout} := 670.2 \cdot ft$ elevation at SY-B-out Valve Pit

$Z_{DB1in} := 680.29 \cdot ft$ elevation at Diversion Box 6241-A-in

$Z_{BP} := 684.92 \cdot ft$ elevation at Booster Pump

$Z_{DB1out} := 680.42 \cdot ft$ elevation at Diversion Box 6241-A-out

$Z_{VSin} := 754.25 \cdot ft$ elevation at Vent Station 6241-V-in

$Z_{VSout} := 754.25 \cdot ft$ elevation at Vent Station 6241-V-out

$Z_{244Ain} := 679.5 \cdot ft$ elevation at 244 Lift Station-in

$Z_{244Aout} := 681.36 \cdot ft$ elevation at 244 Lift Station-out

$Z_{AP107} := 675.34 \cdot ft$ elevation at Tank AP107

Equivalent pipe length between points

$L_{SY102_SYAin} := 339 \cdot ft$

$L_{SYAin_SYBout} := 714 \cdot ft$

$L_{SYBout_DB1in} := 4921 \cdot ft$

$L_{DB1in_BP} := 340 \cdot ft$

$L_{BP_DB1out} := 286 \cdot ft$

$L_{DB1out_VSin} := 13631 \cdot ft$

$L_{VSin_VSout} := 131 \cdot ft$

$L_{VSout_244Ain} := 22425 \cdot ft$

$L_{244Ain_244Aout} := 301 \cdot ft$

$L_{244Aout_AP107} := 7927 \cdot ft$

$L_{SY102_DB1out} := L_{SY102_SYAin} + L_{SYAin_SYBout} + L_{SYBout_DB1in} + L_{DB1in_BP} + L_{BP_DB1out}$ $L_{SY102_DB1out} = 6600\,ft$

$L_{SY102_VSout} := L_{SY102_DB1out} + L_{DB1out_VSin} + L_{VSin_VSout}$ $L_{SY102_VSout} = 20362\,ft$

$L_{SYAin_DB1in} := L_{SYAin_SYBout} + L_{SYBout_DB1in}$ $L_{SYAin_DB1in} = 5635\,ft$

$Z_{SY_tank_bottom} := \left(616.5 + \frac{3}{8} \cdot \frac{1}{12} \cdot \frac{8}{12} + \frac{0.5}{12}\right) \cdot ft$ $Z_{SY_full} := Z_{SY_tank_bottom} + 422 \cdot in$ (H-2-37772)

$\Delta H_{pump} := Z_{SY102} - Z_{SY_full}$

$\Delta H_{pump} = 16.891\,ft$

**CH2MHILL Hanford Group, Inc.**

**EVALUATION ANALYSIS**

Calc. No. RPP-LJJ-005
Revision: 0
Page No. 2 of 31

Client: CH2M Hill Hanford Group, Inc.
Subject: Secondary Encasement Pipe Pressure Due to Primary Pipe Break in Waste Tank Cross-Site Transfer Piping System
Location: 200 Area - Hanford Site, Richland, Washington

WO/Job No. _____
Date: 9/12/2001 By: L. J. Julyk
Checked: 9/25/01 By: [illegible]
Revised: _____ By: _____

**RCSTS Cases**

Case 0 break between SY-102 Pump Pit and SY-A Valve Pit (transfer pump)

$L_O := 0 \cdot ft$ $\quad L_O = 0\,ft$

$H_O := 0 \cdot ft$ $\quad H_O = 0\,ft$

$L_S := L_{SY102_SYAin}$ $\quad L_S = 339\,ft$

$H_S := Z_{SYAin} - Z_{SY102}$ $\quad H_S = 2.58\,ft$

Subcase X11 (low and high point drain, $F_{D6} = 1$ and $F_{D9} = 1$)*,
X10 (low point drain, FD6 = 1 and FD9 = 0) 1 1/2-in.drain,
X01 (high point drain, FD6 = 0 and FD9 = 1)*

Case 1 break between SY-A Valve Pit and Diversion Box (transfer pump)

$L_O := L_{SY102_SYAin}$ $\quad L_O = 339\,ft$

$H_O := Z_{SYAin} - Z_{SY102}$ $\quad H_O = 2.58\,ft$

$L_S := L_{SYAin_DB1in}$ $\quad L_S = 5635\,ft$

$H_S := Z_{DB1in} - Z_{SY102}$ $\quad H_S = 11.67\,ft$

Subcase X11 (low and high point drain, $F_{D6} = 1$ and $F_{D9} = 1$)*,
X10 (low point drain, FD6 = 1 and FD9 = 0)*,
X01 (high point drain, FD6 = 0 and FD9 = 1)

Case 2 break between Diversion Box and Vent Station (transfer + booster pump)

$L_O := L_{SY102_DB1out}$ $\quad L_O = 6600\,ft$

$H_O := Z_{DB1out} - Z_{SY102}$ $\quad H_O = 11.8\,ft$

$L_S := L_{DB1out_VSin}$ $\quad L_S = 13631\,ft$

$H_S := Z_{VSin} - Z_{SY102}$ $\quad H_S = 85.63\,ft$

Subcase X11 (low and high point drain, $F_{D6} = 1$ and $F_{D9} = 1$),
X10 (low point drain, FD6 = 1 and FD9 = 0),
X01 (high point drain, FD6 = 0 and FD9 = 1)

Case 3 break between Vent Station and 244A Lift Station (transfer + booster pump)

$L_O := L_{SY102_VSout}$ $\quad L_O = 20362\,ft$

$H_O := Z_{VSout} - Z_{SY102}$ $\quad H_O = 85.63\,ft$

$L_S := L_{VSout_244Ain}$ $\quad L_S = 22425\,ft$

$H_S := Z_{244Ain} - Z_{SY102}$ $\quad H_S = 10.88\,ft$

Subcase X11 (low and high point drain, $F_{D6} = 1$ and $F_{D9} = 1$)*,
X10 (high point drain, FD6 = 1 and FD9 = 0),
X01 (low point drain, FD6 = 0 and FD9 = 1)*

* *would require additional drain/relief valve at other end of line segment*

X = 1 for FD3 = 1 (primary pipe downstream flow open)
0 for FD3 = 0 (primary pipe downstream flow blocked)

$F_K$ selects primary pipe internal support parameters in annulus
= 0 for existing in-Farm piping (no leak detection cable, no anchors)
= 1 for W058 and W314 extension of W058 (with leak detection cable 2-in. thk anchor, no radius in anchor slots)
= 2 for W058 and W314 extension of W058 (leak detection cable 2-in. thk anchor, with radius in anchor slots)
= 3 for new in-Farm W314 piping (1-in. thk anchor, with radius in anchor slots)

$D_{Di}$ *internal pipe diameter of drain*
= 1.5 or 2 inches for existing in-Farm piping (no rupture disks)
= 2 inches for W058 and W314 extension of W058 (with rupture disks)
= 2 inches for new in-Farm W314 piping (no rupture disks)

$F_{D3}$ $F_{D6}$ $F_{D9}$ switch to block (= 0) or open (= 1) flow downstream of break and drain location 6 or 9, respectively

$L_P$ total equivalent length of primary pipe from pump to discharge exit

$L_P := L_{SY102_VSout} + L_{VSout_244Ain} + L_{244Ain_244Aout} + L_{244Aout_AP107}$ $L_P = 51015\,ft$ $L_P = 9.662\,mi$

$H := Z_{AP107} - Z_{SY102}$ change in elevation of primary pipe from pump to point just before vertical increase in elevation at end of primary pipe at discharge to tank (see Figure 1) $H = 7\,ft$

$\Delta Z_D := -1 \cdot ft$ approximate change in elevation at drain

$Z := 0 \cdot ft$ vertical increase in elevation at end of primary pipe at discharge to tank at WTP (N/A)

Supernate Transfer
Case 2 break between Diversion Box and Vent Station

$L_o := L_{SY102_DB1out}$ $L_o = 6600\,ft$ start distance from pump of secondary encasement section under consideration

$H_o := Z_{DB1out} - Z_{SY102}$ $H_o = 11.8\,ft$ change in elevation of primary pipe from pump to point $L_o$ $H_o = 11.8\,ft$

$L_S := L_{DB1out_VSin}$ $L_S = 13631\,ft$ length of secondary encasement section under consideration between drains

$H_S := Z_{VSin} - Z_{SY102}$ $H_S = 85.63\,ft$ change in elevation of primary pipe from pump to point $L_o + L_S$ $H_S = 85.63\,ft$

$x_B := 1000 \cdot ft + L_o$ distance of break in primary pipe from transfer pump

$H_B(L_o, H_o, L_S, H_S, x_B) = 17.22\,ft$ elevation at assumed break location $x_B$ relative to transfer pump elevation

$t_C$ temperature of waste (°C)

$\rho$ bulk density of waste (kg/L)

Pipe roughness

$\varepsilon_P := 2 \cdot mil$ stainless steel primary pipe

$\varepsilon_S := 5 \cdot mil$ carbon steel secondary (encasement) pipe

$\varepsilon_D := 5 \cdot mil$ carbon steel drain pipe

**CH2MHILL Hanford Group, Inc.**

**EVALUATION ANALYSIS**

Calc. No. RPP-LJJ-005
Revision: 0
Page No. 4 of 31

Client: CH2M Hill Hanford Group, Inc.
Subject: Secondary Encasement Pipe Pressure Due to Primary Pipe Break in Waste Tank Cross-Site Transfer Piping System
Location: 200 Area - Hanford Site, Richland, Washington

WO/Job No. _____
Date: 9/12/2001 By: L. J. Julyk
Checked: 9/25/01 By: R. Holloman
Revised: _____ By: _____

Assumed Crack Size Parameters

$D_{LDo} = \begin{pmatrix} 0 \\ 0.31 \\ 0.31 \\ 0 \end{pmatrix} in$ Existing, W058, W058, W314 — diameter of leak detection cable

$\rho := 1.3 \cdot \frac{kg}{liter}$ $t_C := 60$

$T_F(t_C) = 140$

viscosity $\mu(\rho, t_C) = 1.197\,cP$

$L_c := 10 \cdot in$ crack length

$W_c := 0.1 \cdot in$ crack opening width

$A_{crack}(L_c, W_c) = 1\,in^2$ $\beta_{c1}(L_c, W_c) = 0.368$ $\beta_{c2}(L_c, W_c, D_{LDo}) = \begin{pmatrix} 0.22781 \\ 0.22826 \\ 0.22826 \\ 0.22781 \end{pmatrix}$

$P_{crack}(L_c, W_c) = 20.2\,in$

$D_{H_crack}(L_c, W_c) = 0.198\,in$ effective hydraulic diameter $\alpha_c(L_c, W_c) = 1.091$ $L/D_{oH}$ ratio for crack

$\varepsilon_c := 1 \cdot mil$ primary pipe through crack roughness

$V_c := 10 \cdot \frac{ft}{sec}$ $R_e(D_{H_crack}(L_c, W_c), V_c, \rho, \mu(\rho, t_C)) = 2 \times 10^4$ Reynolds number for flow through crack

thick-edged orifice with $\alpha = L/D_{oH} > 0.015$ $\alpha_c(L_c, W_c) = 1.091 > 0.15$ => thick-edged orifice

Lyons 1982, Eqn 4, pg. 158

$K_{crack}(L_c, W_c, V_c, \rho, t_C, \varepsilon_c, D_{LDo}) = \begin{pmatrix} 1.80719 \\ 1.80671 \\ 1.80671 \\ 1.80719 \end{pmatrix}$

Idelchik 1994, Diagram 4-12, pg. 219

$KK_{crack}(L_c, W_c, V_c, \rho, t_C, \varepsilon_c, D_{LDo}) = \begin{pmatrix} 1.58502 \\ 1.58459 \\ 1.58459 \\ 1.58502 \end{pmatrix}$

shap-edged orifice (Idelchik 1994, pg. 218, $\alpha = L/D_{oH} < 0.015$)

$KKK_{crack}(L_c, W_c, V_c, \rho, t_C, \varepsilon_c, D_{LDo}) = \begin{pmatrix} 2.61664 \\ 2.61598 \\ 2.61598 \\ 2.61664 \end{pmatrix}$

Encasement annulus K-resistance factors for guides and anchors modeled as thick-edged (long) orifice for $\alpha = L/D_{oH} > 0.015$

Lyons 1982, Eqn 4, pg. 158

| | | | | |
|---|---|---|---|---|
| Existing | $F_K := 0$ | $K_{guide}(v, \rho, t_C, \varepsilon, F_K) = 0.083$ | $K_{anchor}(v, \rho, t_C, \varepsilon, F_K) = 0$ | |
| W058 | $F_K := 1$ | $K_{guide}(v, \rho, t_C, \varepsilon, F_K) = 1.912$ | $K_{anchor}(v, \rho, t_C, \varepsilon, F_K) = 17.686$ | 3/4-in. thk no radius in slots |
| | $F_K := 2$ | $K_{guide}(v, \rho, t_C, \varepsilon, F_K) = 1.912$ | $K_{anchor}(v, \rho, t_C, \varepsilon, F_K) = 11.537$ | 3/4-in. thk with radius in slots |
| W314 | $F_K := 3$ | $K_{guide}(v, \rho, t_C, \varepsilon, F_K) = 0.083$ | $K_{anchor}(v, \rho, t_C, \varepsilon, F_K) = 10.696$ | 1-in. thk with radius in slots |

$V_z := 0 \cdot ft \cdot sec^{-1}$ $p_z := 0 \cdot psi$ $g = 32.174\,ft\,sec^{-2}$

$\Delta V := 0.1 \cdot ft\,sec^{-1}$

Apply conservation of mass (continuity) and energy (Bernoulli theorem) between nodes (see Figure 1a of Appendix A) and at the pipe break plus the characteristic pump head relation (see Figure 2 of Appendix A) to model the nonlinear system of equations that govern the steady-state flow behavior resulting from a primary pipe break at location $x_B$ relative to pump.

$H'_p(Q) := H_{NTP}(Q) - \Delta H_{pump}$

**SY-101 New Transfer Pump** (RPP-5667 Rev. 0B)
(Canned Motor Westinghouse Pump Model 2A-513-A1)

**Nonlinear governing system of equations**

Given

apply conservation of mass (continuity) and energy (Bernoulli theorem)

$V_0 \ge V_z \quad V_1 \ge V_z \quad V_2 \ge V_z \quad V_3 \ge V_z \quad V_4 \ge V_z \quad V_5 \ge V_z \quad V_6 \ge V_z$

continuity

$$A_{S6}(F_K) \cdot V_2 = F_{D6} \cdot A_f(D_{Di}) \cdot V_3$$
$$A_{S6}(F_K) \cdot V_4 = F_{D9} \cdot A_f(D_{Di}) \cdot V_5$$
$$A_P \cdot V_0 = A_P \cdot V_1 \cdot F_{D3} + A_{crack}(L_c, W_c) \cdot V_6$$
$$A_{crack}(L_c, W_c) \cdot V_6 = A_{S6}(F_K) \cdot (V_2 + V_4)$$

$$H_P = H'_p(A_P \cdot V_0)$$

pump head curve

Bernoulli (between nodes, see Figure 1a of Appendix A)

$$\left[H_P - f\left(R_e(D_{Pi}, V_0, \rho, \mu(\rho, t_C)), \frac{\varepsilon_P}{D_{Pi}}\right) \cdot \frac{x_B}{D_{Pi}} \cdot \frac{(V_0)^2}{2 \cdot g}\right] = \left(\frac{p_0}{\rho \cdot g} + H_B(L_o, H_o, L_S, H_S, x_B)\right) \qquad 1\text{-}2$$

$$\left[\frac{p_0}{\rho \cdot g} + \frac{(V_0)^2}{2 \cdot g}\right] = \left[\frac{p_1}{\rho \cdot g} + \frac{(V_1)^2}{2 \cdot g}\right] \qquad 2\text{-}3$$

$$\left[\frac{p_1}{\rho \cdot g} + \left(1 - f\left(R_e(D_{Pi}, V_1, \rho, \mu(\rho, t_C)), \frac{\varepsilon_P}{D_{Pi}}\right) \cdot \frac{L_P - x_B}{D_{Pi}} - K_E\right) \cdot \frac{(V_1)^2}{2 \cdot g} + H_B(L_o, H_o, L_S, H_S, x_B)\right] = \left[\frac{(V_1)^2}{2 \cdot g} + H + Z\right] \qquad 3\text{-}4$$

$$\left[\frac{p_0}{\rho \cdot g} + \frac{(V_0)^2}{2 \cdot g}\right] = \left[\frac{p_6}{\rho \cdot g} + \frac{(V_6)^2}{2 \cdot g} + K_{crack}\left(L_c, W_c, V_6, \rho, t_C, \varepsilon_c, D_{LDo_{F_K}}\right) \cdot \frac{(V_6)^2}{2 \cdot g}\right] \qquad 2\text{-crack}$$

$$\left[\frac{p_6}{\rho \cdot g} + \frac{(V_6)^2}{2 \cdot g}\right] = \left[\frac{p_2}{\rho \cdot g} + \frac{(V_2)^2}{2 \cdot g}\right] \qquad \text{crack-}5$$

**CH2MHILL Hanford Group, Inc.**

**EVALUATION ANALYSIS**

Calc. No. RPP-LJJ-005
Revision: 0
Page No. 6 of 31

Client: CH2M Hill Hanford Group, Inc.
Subject: Secondary Encasement Pipe Pressure Due to Primary Pipe Break in Waste Tank Cross-Site Transfer Piping System
Location: 200 Area - Hanford Site, Richland, Washington

WO/Job No. _____
Date: 9/12/2001 By: L. J. Julyk
Checked: 9/25/01 By: [illegible]
Revised: _____ By: _____

$$\left[\begin{array}{l}\dfrac{p_2}{\rho\cdot g}+H_B(L_o,H_o,L_S,H_S,x_B)-f\left(R_e\left(D_{H_a6}(F_K),V_2,\rho,\mu(\rho,t_C)\right),\dfrac{\varepsilon_S}{D_{H_a6}(F_K)}\right)\cdot\dfrac{x_B-L_o}{D_{H_a6}(F_K)}\cdot\dfrac{(V_2)^2}{2\cdot g}\ldots\\ +\left[1-\left(\begin{array}{l}I(F_K,L_o,x_B)\cdot K_{guide}(V_2,\rho,t_C,\varepsilon_S,F_K)\ldots\\ +J(F_K,L_o,x_B)\cdot K_{anchor}(V_2,\rho,t_C,\varepsilon_S,F_K)+K_D(D_{Di},D_{LDo_{F_K}})\end{array}\right)\right]\cdot\dfrac{(V_2)^2}{2\cdot g}\end{array}\right]=\left[\begin{array}{l}\dfrac{p_3}{\rho\cdot g}\ldots\\ +\dfrac{(V_3)^2}{2\cdot g}\ldots\\ +H_o\end{array}\right]\quad 5\text{-}6$$

$$\left[\frac{p_3}{\rho\cdot g}+\left(1-f\left(R_e\left(D_{Di},V_3,\rho,\mu(\rho,t_C)\right),\frac{\varepsilon_D}{D_{Di}}\right)\cdot\frac{L_D(D_{Di},F_K)}{D_{Di}}-K_E\right)\cdot\frac{(V_3)^2}{2\cdot g}\right]=\frac{(V_3)^2}{2\cdot g}+\Delta Z_D\quad 6\text{-}7$$

$$\left[\frac{p_6}{\rho\cdot g}+\frac{(V_6)^2}{2\cdot g}\right]=\left[\frac{p_4}{\rho\cdot g}+\frac{(V_4)^2}{2\cdot g}\right]\quad \text{crack-}8$$

$$\left[\begin{array}{l}\dfrac{p_4}{\rho\cdot g}+H_B(L_o,H_o,L_S,H_S,x_B)-f\left(R_e\left(D_{H_a6}(F_K),V_4,\rho,\mu(\rho,t_C)\right),\dfrac{\varepsilon_S}{D_{H_a6}(F_K)}\right)\cdot\dfrac{L_S-(x_B-L_o)}{D_{H_a6}(F_K)}\cdot\dfrac{(V_4)^2}{2\cdot g}\ldots\\ +\left[1-\left(\begin{array}{l}M(F_K,L_o,L_S,x_B)\cdot K_{guide}(V_4,\rho,t_C,\varepsilon_S,F_K)\ldots\\ +N(F_K,L_o,L_S,x_B)\cdot K_{anchor}(V_4,\rho,t_C,\varepsilon_S,F_K)+K_D(D_{Di},D_{LDo_{F_K}})\end{array}\right)\right]\cdot\dfrac{(V_4)^2}{2\cdot g}\end{array}\right]=\left[\begin{array}{l}\dfrac{p_5}{\rho\cdot g}\ldots\\ +\dfrac{(V_5)^2}{2\cdot g}\ldots\\ +H_S\end{array}\right]\quad 8\text{-}9$$

$$\left[\frac{p_5}{\rho\cdot g}+\left(1-f\left(R_e\left(D_{Di},V_5,\rho,\mu(\rho,t_C)\right),\frac{\varepsilon_D}{D_{Di}}\right)\cdot\frac{L_D(D_{Di},F_K)}{D_{Di}}-K_E\right)\cdot\frac{(V_5)^2}{2\cdot g}\right]=\frac{(V_5)^2}{2\cdot g}+\Delta Z_D\quad 9\text{-}10$$

Solution function

$$ff(L_o,H_o,L_S,H_S,x_B,\rho,t_C,\varepsilon_P,\varepsilon_S,\varepsilon_D,D_{Di},F_K,F_{D3},F_{D6},F_{D9},\Delta Z_D,L_P,H,Z,L_c,W_c,\varepsilon_c,H_P,p,V):=\mathrm{Find}(H_P,p,V)$$

$$\begin{array}{ccccccc}(p_2 & p_3 & p_5 & p_6 & p_8 & p_9 & p_c)^T\\ 0 & 1 & 2 & 3 & 4 & 5 & 6\end{array}\qquad\begin{array}{ccccccc}(V_1 & V_3 & V_5 & V_6 & V_8 & V_9 & V_c)^T\\ 0 & 1 & 2 & 3 & 4 & 5 & 6\end{array}$$

**CH2MHILL Hanford Group, Inc.**

**EVALUATION ANALYSIS**

Calc. No. RPP-LJJ-005
Revision: 0
Page No. 7 of 31

Client: CH2M Hill Hanford Group, Inc.
Subject: Secondary Encasement Pipe Pressure Due to Primary Pipe Break in Waste Tank Cross-Site Transfer Piping System
Location: 200 Area - Hanford Site, Richland, Washington

WO/Job No. _____
Date: 9/12/2001 By: L. J. Julyk
Checked: 9/25/01 By: [illegible]
Revised: _____ By: _____

For plotting, following function returns nth solution variable at points defined in vector $x_B$ n = result variable selected

$$PP(L_o, H_o, L_S, H_S, x_B, \rho, t_C, \varepsilon_P, \varepsilon_S, \varepsilon_D, D_{Di}, F_K, F_{D3}, F_{D6}, F_{D9}, \Delta Z_D, L_P, H, Z, n, L_c, W_c, \varepsilon_c, H_P, p, V) :=$$

```
vp ← 0
H'P ← HP
p' ← p
V' ← V
for i ∈ 0..length(xB) − 1
    xBB ← xBi
    X ← ff(Lo, Ho, LS, HS, xI
    H'P ← X0
    p' ← X1
    V' ← X2
    V' ← V' + ΔV/4
    Y ← X1
    vpi ← Yn
vp
```

**CH2MHILL Hanford Group, Inc.**

**EVALUATION ANALYSIS**

Calc. No. RPP-LJJ-005
Revision: 0
Page No. 8 of 31

Client: CH2M Hill Hanford Group, Inc.
Subject: Secondary Encasement Pipe Pressure Due to Primary Pipe Break in Waste Tank Cross-Site Transfer Piping System
Location: 200 Area - Hanford Site, Richland, Washington

WO/Job No. _____
Date: 9/12/2001 By: L. J. Julyk
Checked: 9/25/01 By: R. R. Rohase
Revised: _____ By: _____

**RCSTS Supernate Transfer**

**Case 0 break between SY-102 Pump Pit and SY-A Valve Pit**

$L_o := 0 \cdot ft$ $\quad L_o = 0\,ft$ start distance from pump of secondary encasement section under consideration

$H_o := 0 \cdot ft$ $\quad H_o = 0\,ft$ change in elevation of primary pipe from pump to point $L_o$

$L_S := L_{SY102_SYAin}$ $\quad L_S = 339\,ft$ length of secondary encasement section under consideration between drains

$H_S := Z_{SYAin} - Z_{SY102}$ $\quad H_S = 2.58\,ft$ change in elevation of primary pipe from pump to point $L_o + L_S$

Subcase X11 (low and high point drain, $F_{D6} = 1$ and $F_{D9} = 1$)*,
X10 (low point drain, FD6 = 1 and FD9 = 0) 1 1/2-in.drain,
X01 (high point drain, FD6 = 0 and FD9 = 1)*

$D_{Di} := D_{D1.5i}$ $\quad \rho := 1.3 \cdot \frac{kg}{liter}$ $\quad t_C := 60\,°C$

**Initial guesses (X11)** $Q := 326 \cdot gpm$ $\quad V_1 := \frac{Q}{A_P}$ $\quad V_1 = 14.148\,\frac{ft}{sec}$ flow velocities

Both low and high point drains open $\quad F_K := 0$ $\quad F_{D3} := 0$ $\quad F_{D6} := 1$ $\quad F_{D9} := 1$

$H_{P11} := H'_p(Q)$ pump head $\quad H_{P11} = 239\,ft$

$p_2 := 148 \cdot psi$ primary pipe pressure just up stream of break

$p_3 := 149 \cdot psi$ primary pipe pressure just down stream of break

$p_5 := 20 \cdot psi$ secondary pipe pressure just up stream of break

$p_6 := 12 \cdot psi$ secondary pipe pressure at drain up stream of break

$p_8 := 20 \cdot psi$ secondary pipe pressure just down stream of break

$p_9 := 8 \cdot psi$ secondary pipe pressure at drain down stream of break

$V_5 := \frac{V_1 \cdot F_{D6} + \Delta V}{5.4}$

$V_6 := V_5 \cdot \frac{A_{S6}(F_K)}{A_f(D_{Di})}$ $\quad \frac{A_{S6}(F_K)}{A_P} = 2.607$

$V_8 := \frac{V_1 \cdot F_{D9} + \Delta V}{6.5}$ $\quad \frac{A_{S6}(F_K)}{A_f(D_{Di})} = 9.46$

$V_9 := V_8 \cdot \frac{A_{S6}(F_K)}{A_f(D_{Di})}$

$p_c := 1 \cdot psi$ apply conservation of mass (continuity) at break

$V_3 := V_1 - \frac{A_{S6}(F_K)}{A_P} \cdot (V_5 + V_8)$ $\quad V_3 = 1.56\,\frac{ft}{sec}$

$V_c := \frac{A_{S6}(F_K)}{A_{crack}(L_c, W_c)} \cdot (V_5 + V_8)$ $\quad V_c = 93.1\,\frac{ft}{sec}$

$p_{11} := (p_2\ p_3\ p_5\ p_6\ p_8\ p_9\ p_c)^T$ $\quad V_{11} := (V_1\ V_3\ V_5\ V_6\ V_8\ V_9\ V_c)^T$

**use Existing Piping Guide/Anchor** $\quad F_K = 0$

**CH2MHILL Hanford Group, Inc.**

**EVALUATION ANALYSIS**

Calc. No. RPP-LJJ-005
Revision: 0
Page No. 9 of 31

Client: CH2M Hill Hanford Group, Inc. WO/Job No. .
Subject: Secondary Encasement Pipe Pressure Due to Primary Pipe Break in Waste Tank Cross-Site Transfer Piping System
Date: 9/12/2001 By: L. J. Julyk
Checked: 9/25/01 By:
Location: 200 Area - Hanford Site, Richland, Washington
Revised: By:

**Initial guesses (X10)** $Q := 288 \cdot gpm$ $V_1 := \frac{Q}{A_P}$ $V_1 = 12.499 \frac{ft}{sec}$ flow velocities

Low point drain open

$F_K = 0$ $F_{D3} = 0$ $F_{D6} := 1$ $F_{D9} := 0$

$H_{P10} := H'_p(Q)$ pump head $H_{P10} = 305\,ft$

$p_2 := 160 \cdot psi$ primary pipe pressure just up stream of break

$p_3 := 160 \cdot psi$ primary pipe pressure just down stream of break

$p_5 := 65 \cdot psi$ secondary pipe pressure just up stream of break

$p_6 := 30 \cdot psi$ secondary pipe pressure at drain up stream of break

$p_8 := 65 \cdot psi$ secondary pipe pressure just down stream of break

$p_9 := 46 \cdot psi$ secondary pipe pressure at drain down stream of break

$V_5 := \frac{V_1 \cdot F_{D6} + \Delta V}{3.1}$

$V_6 := V_5 \cdot \frac{A_{S6}(F_K)}{A_f(D_{Di})}$ $\frac{A_{S6}(F_K)}{A_P} = 2.607$

$V_8 := \frac{V_1 \cdot F_{D9} + \Delta V}{50}$ $\frac{A_{S6}(F_K)}{A_f(D_{Di})} = 9.46$

$V_9 := V_8 \cdot \frac{A_{S6}(F_K)}{A_f(D_{Di})}$

$p_c := 12 \cdot psi$

apply conservation of mass (continuity) at break

$V_3 := V_1 - \frac{A_{S6}(F_K)}{A_P} \cdot (V_5 + V_8)$ $V_3 = 1.9 \frac{ft}{sec}$

$V_c := \frac{A_{S6}(F_K)}{A_{crack}(L_c, W_c)} \cdot (V_5 + V_8)$ $V_c = 78.4 \frac{ft}{sec}$

$p_{10} := (p_2\ p_3\ p_5\ p_6\ p_8\ p_9\ p_c)^T$ $V_{10} := (V_1\ V_3\ V_5\ V_6\ V_8\ V_9\ V_c)^T$

**Initial guesses (X01)** $Q := 302 \cdot gpm$ $V_1 := \frac{Q}{A_P}$ $V_1 = 13.106 \frac{ft}{sec}$ low velocities

High point drain open

$F_K = 0$ $F_{D3} = 0$ $F_{D6} := 0$ $F_{D9} := 1$

$H_{P01} := H'_p(Q)$ pump head $H_{P01} = 282\,ft$

$p_2 := 179 \cdot psi$ primary pipe pressure just up stream of break

$p_3 := 179 \cdot psi$ primary pipe pressure just down stream of break

$p_5 := 75 \cdot psi$ secondary pipe pressure just up stream of break

$p_6 := 53 \cdot psi$ secondary pipe pressure at drain up stream of break

$p_8 := 75 \cdot psi$ secondary pipe pressure just down stream of break

$p_9 := 33 \cdot psi$ secondary pipe pressure at drain down stream of break

$V_5 := \frac{V_1 \cdot F_{D6} + \Delta V}{3}$

$V_6 := V_5 \cdot \frac{A_{S6}(F_K)}{A_f(D_{Di})}$ $\frac{A_{S6}(F_K)}{A_P} = 2.607$

$V_8 := \frac{V_1 \cdot F_{D9} + \Delta V}{3}$ $\frac{A_{S6}(F_K)}{A_f(D_{Di})} = 9.46$

$V_9 := V_8 \cdot \frac{A_{S6}(F_K)}{A_f(D_{Di})}$

$p_c := 17 \cdot psi$

apply conservation of mass (continuity) at break

$V_3 := V_1 - \frac{A_{S6}(F_K)}{A_P} \cdot (V_5 + V_8)$ $V_3 = 1.55 \frac{ft}{sec}$

$V_c := \frac{A_{S6}(F_K)}{A_{crack}(L_c, W_c)} \cdot (V_5 + V_8)$ $V_c = 85.5 \frac{ft}{sec}$

$p_{01} := (p_2\ p_3\ p_5\ p_6\ p_8\ p_9\ p_c)^T$ $V_{01} := (V_1\ V_3\ V_5\ V_6\ V_8\ V_9\ V_c)^T$

0 1 2 3 4 5 6 0 1 2 3 4 5 6

**CH2MHILL Hanford Group, Inc.**

**EVALUATION ANALYSIS**

Calc. No. RPP-LJJ-005
Revision: 0
Page No. 10 of 31

Client: CH2M Hill Hanford Group, Inc.
Subject: Secondary Encasement Pipe Pressure Due to Primary Pipe Break in Waste Tank Cross-Site Transfer Piping System
Location: 200 Area - Hanford Site, Richland, Washington

WO/Job No. _____
Date: 9/12/2001 By: L. J. Julyk
Checked: 9/25/01 By: R. L. Rose
Revised: _____ By: _____

**Case 0 (X11)**

**SY-101 New Transfer Pump** (RPP-5667 Rev. 0B)
(Canned Motor Westinghouse Pump Model 2A-513-A1)

Input==========

$L_o = 0\,ft$ $\quad H = 7\,ft$ $\quad \varepsilon_P = 2\,mil$

$\boxed{L_S = 339\,ft}$ $\quad \rho = 1.3\,\frac{kg}{liter}$ $\quad Z = 0\,ft$ $\quad \varepsilon_S = 5\,mil$ $\quad D_{LDo_{F_K}} = 0\,in$ $\quad F_K = 0$

$L_P = 51015\,ft$ $\quad F_{D3} = 0$ $\quad \varepsilon_D = 5\,mil$ $\quad L_c = 10\,in$

$\boxed{x_B := 0 \cdot ft + L_c}$ $\quad t_C = 60\ ^{\circ}C$ $\quad D_{Di} = 1.61\,in$ $\quad \Delta Z_D = -1\,ft$ $\quad L_D(D_{Di}, F_K) = 7.025\,ft$ $\quad W_c = 0.1\,in$

$F_{D6} := 1$ $\quad F_{D9} := 1$ $\quad J(F_K, L_o, x_B) = 0$ $\quad N(F_K, L_o, L_S, x_B) = 0$ $\quad \varepsilon_c = 1\,mil$

$I(F_K, L_o, x_B) = 0$ $\quad M(F_K, L_o, L_S, x_B) = 38$

$$\begin{pmatrix} h_{P11} \\ P_{11} \\ v_{11} \end{pmatrix} := ff(L_o, H_o, L_S, H_S, x_B, \rho, t_C, \varepsilon_P, \varepsilon_S, \varepsilon_D, D_{Di}, F_K, F_{D3}, F_{D6}, F_{D9}, \Delta Z_D, L_P, H, Z, L_c, W_c, \varepsilon_c, H_{P11}, p_{11}, V_{11})$$

$$\begin{pmatrix} P_2 \\ P_3 \\ P_5 \\ P_6 \\ P_8 \\ P_9 \\ P_{crack} \end{pmatrix} := P_{11} \quad \begin{pmatrix} v_1 \\ v_3 \\ v_5 \\ v_6 \\ v_8 \\ v_9 \\ v_{crack} \end{pmatrix} := v_{11} \qquad P_{11} = \begin{pmatrix} 162.72 \\ 164.149 \\ 19.889 \\ 12.254 \\ 19.899 \\ 9.964 \\ -60.084 \end{pmatrix} psi \quad v_{11} = \begin{pmatrix} 12.931 \\ 1.996 \\ 2.603 \\ 24.638 \\ 2.358 \\ 22.317 \\ 95.592 \end{pmatrix} ft\,sec^{-1}$$

Results----------

$h_{P11} = 289\,ft$ $\quad \mu(\rho, t_C) = 1.197\,cP$ $\quad L_{i_{F_K}} = 9\,ft$ $\quad L_{j_{F_K}} = 9 \times 10^4\,ft$

$P_2 = 162.7\,psi$ $\quad v_1 = 12.9\,ft\,sec^{-1}$ $\quad A_P \cdot v_1 = 297.9\,gpm$ $\quad D_{Di} = 1.61\,in$

$P_3 = 164.1\,psi$ $\quad F_{D3} \cdot v_3 = 0\,ft\,sec^{-1}$ $\quad F_{D3} \cdot A_P \cdot v_3 = 0\,gpm$

$P_5 = 19.9\,psi$ $\quad v_5 = 2.6\,ft\,sec^{-1}$ $\quad A_{S6}(F_K) \cdot v_5 = 156.3\,gpm$

$P_6 = 12.3\,psi$ $\quad F_{D6} \cdot v_6 = 24.6\,ft\,sec^{-1}$ $\quad F_{D6} \cdot A_f(D_{Di}) \cdot v_6 = 156.3\,gpm$

$P_8 = 19.9\,psi$ $\quad v_8 = 2.4\,ft\,sec^{-1}$ $\quad A_{S6}(F_K) \cdot v_8 = 141.6\,gpm$

$P_9 = 10\,psi$ $\quad F_{D9} \cdot v_9 = 22.3\,ft\,sec^{-1}$ $\quad F_{D9} \cdot A_f(D_{Di}) \cdot v_9 = 141.6\,gpm$

$P_{crack} = -60.1\,psi$ $\quad v_1 \cdot A_P = F_{D3} \cdot A_P \cdot v_3 + A_{S6}(F_K) \cdot v_5 + A_{S6}(F_K) \cdot v_8 = 297.9\,gpm$

(continuity check at break, OK)

$v_{crack} = 95.6\,ft\,sec^{-1}$

$R_e(D_{H_crack}(L_c, W_c), v_{crack}, \rho, \mu(\rho, t_C)) = 2 \times 10^5$

$P_2 - P_5 = 142.831\,psi$

**CH2MHILL Hanford Group, Inc.**

**EVALUATION ANALYSIS**

Calc. No. RPP-LJJ-005
Revision: 0
Page No. 11 of 31

Client: CH2M Hill Hanford Group, Inc.
Subject: Secondary Encasement Pipe Pressure Due to Primary Pipe Break in Waste Tank Cross-Site Transfer Piping System
Location: 200 Area - Hanford Site, Richland, Washington

WO/Job No. _____
Date: 9/12/2001 By: L. J. Julyk
Checked: 9/25/01 By: [signature]
Revised: _____ By: _____

**Case 0 (X10)**

**SY-101 New Transfer Pump** (RPP-5667 Rev. 0B)
(Canned Motor Westinghouse Pump Model 2A-513-A1)

Input==========

$L_o = 0\,ft$ $\quad H = 7\,ft$ $\quad \varepsilon_P = 2\,mil$

$\boxed{L_S = 339\,ft}$ $\quad \rho = 1.3\,\frac{kg}{liter}$ $\quad Z = 0\,ft$ $\quad \varepsilon_S = 5\,mil$ $\quad D_{LDo_{F_K}} = 0\,in$ $\quad F_K = 0$

$L_P = 51015\,ft$ $\quad F_{D3} = 0$ $\quad \varepsilon_D = 5\,mil$ $\quad L_c = 10\,in$

$\boxed{x_B := 0 \cdot ft + L_o}$ $\quad t_C = 60\ ^{\circ}C$ $\quad D_{Di} = 1.61\,in$ $\quad \Delta Z_D = -1\,ft$ $\quad L_D(D_{Di}, F_K) = 7.025\,ft$ $\quad W_c = 0.1\,in$

$F_{D6} := 1$ $\quad F_{D9} := 0$ $\quad J(F_K, L_o, x_B) = 0$ $\quad N(F_K, L_o, L_S, x_B) = 0$ $\quad \varepsilon_c = 1\,mil$

$I(F_K, L_o, x_B) = 0$ $\quad M(F_K, L_o, L_S, x_B) = 38$

$$\begin{pmatrix} h_{P10} \\ P_{10} \\ v_{10} \end{pmatrix} := ff(L_o, H_o, L_S, H_S, x_B, \rho, t_C, \varepsilon_P, \varepsilon_S, \varepsilon_D, D_{Di}, F_K, F_{D3}, F_{D6}, F_{D9}, \Delta Z_D, L_P, H, Z, L_c, W_c, \varepsilon_c, H_{P10}, p_{10}, V_{10})$$

$$\begin{pmatrix} P_2 \\ P_3 \\ P_5 \\ P_6 \\ P_8 \\ P_9 \\ P_{crack} \end{pmatrix} := P_{10} \quad \begin{pmatrix} v_1 \\ v_3 \\ v_5 \\ v_6 \\ v_8 \\ v_9 \\ v_{crack} \end{pmatrix} := v_{10}$$

Results----------

$h_{P10} = 326\,ft$ $\quad \mu(\rho, t_C) = 1.197\,cP$ $\quad L_{i_{F_K}} = 9\,ft$ $\quad L_{j_{F_K}} = 9 \times 10^4\,ft$

$P_2 = 184\,psi$ $\quad v_1 = 11.9\,ft\,sec^{-1}$ $\quad A_P \cdot v_1 = 274.7\,gpm$ $\quad D_{Di} = 1.61\,in$

$P_3 = 185.2\,psi$ $\quad F_{D3} \cdot v_3 = 0\,ft\,sec^{-1}$ $\quad F_{D3} \cdot A_P \cdot v_3 = 0\,gpm$

$P_5 = 62.4\,psi$ $\quad v_5 = 4.6\,ft\,sec^{-1}$ $\quad A_{S6}(F_K) \cdot v_5 = 274.7\,gpm$

$P_6 = 38.8\,psi$ $\quad F_{D6} \cdot v_6 = 43.3\,ft\,sec^{-1}$ $\quad F_{D6} \cdot A_f(D_{Di}) \cdot v_6 = 274.7\,gpm$

$P_8 = 62.6\,psi$ $\quad v_8 = 0\,ft\,sec^{-1}$ $\quad A_{S6}(F_K) \cdot v_8 = 0\,gpm$

$P_9 = 43\,psi$ $\quad F_{D9} \cdot v_9 = 0\,ft\,sec^{-1}$ $\quad F_{D9} \cdot A_f(D_{Di}) \cdot v_9 = 0\,gpm$

$P_{crack} = -5.5\,psi$ $\quad v_1 \cdot A_P = F_{D3} \cdot A_P \cdot v_3 + A_{S6}(F_K) \cdot v_5 + A_{S6}(F_K) \cdot v_8 = 274.7\,gpm$

(continuity check at break, OK)

$v_{crack} = 88.1\,ft\,sec^{-1}$

$R_e(D_{H_crack}(L_c, W_c), v_{crack}, \rho, \mu(\rho, t_C)) = 1 \times 10^5$

$P_2 - P_5 = 121.577\,psi$

**CH2MHILL Hanford Group, Inc.**

**EVALUATION ANALYSIS**

Calc. No. RPP-LJJ-005
Revision: 0
Page No. 12 of 31

Client: CH2M Hill Hanford Group, Inc.
Subject: Secondary Encasement Pipe Pressure Due to Primary Pipe Break in Waste Tank Cross-Site Transfer Piping System
Location: 200 Area - Hanford Site, Richland, Washington

WO/Job No. _____
Date: 9/12/2001 By: L. J. Julyk
Checked: 9/25/01 By: R. Hellman
Revised: _____ By: _____

**Case 0 (X01)**

Input==========

**SY-101 New Transfer Pump** (RPP-5667 Rev. 0B)
(Canned Motor Westinghouse Pump Model 2A-513-A1)

$L_o = 0\,ft$ $\quad H = 7\,ft$ $\quad \varepsilon_P = 2\,mil$

$L_S = 339\,ft$ $\quad \rho = 1.3\,\frac{kg}{liter}$ $\quad Z = 0\,ft$ $\quad \varepsilon_S = 5\,mil$ $\quad D_{LDo_{F_K}} = 0\,in$ $\quad F_K = 0$

$L_P = 51015\,ft$ $\quad F_{D3} = 0$ $\quad \varepsilon_D = 5\,mil$

$x_B := 0 \cdot ft + L_o$ $\quad t_C = 60\ ^{\circ}C$ $\quad D_{Di} = 1.61\,in$ $\quad \Delta Z_D = -1\,ft$ $\quad L_D(D_{Di}, F_K) = 7.025\,ft$ $\quad L_c = 10\,in$

$W_c = 0.1\,in$

$F_{D6} := 0$ $\quad F_{D9} := 1$ $\quad J(F_K, L_o, x_B) = 0$ $\quad N(F_K, L_o, L_S, x_B) = 0$ $\quad \varepsilon_c = 1\,mil$

$I(F_K, L_o, x_B) = 0$ $\quad M(F_K, L_o, L_S, x_B) = 38$

$$\begin{pmatrix} h_{P01} \\ P_{01} \\ v_{01} \end{pmatrix} := ff(L_o, H_o, L_S, H_S, x_B, \rho, t_C, \varepsilon_P, \varepsilon_S, \varepsilon_D, D_{Di}, F_K, F_{D3}, F_{D6}, F_{D9}, \Delta Z_D, L_P, H, Z, L_c, W_c, \varepsilon_c, H_{P01}, p_{01}, V_{01})$$

$$\begin{pmatrix} P_2 \\ P_3 \\ P_5 \\ P_6 \\ P_8 \\ P_9 \\ P_{crack} \end{pmatrix} := P_{01} \quad \begin{pmatrix} v_1 \\ v_3 \\ v_5 \\ v_6 \\ v_8 \\ v_9 \\ v_{crack} \end{pmatrix} := v_{01}$$

Results----------

$h_{P01} = 333\,ft$ $\quad \mu(\rho, t_C) = 1.197\,cP$ $\quad L_{i_{F_K}} = 9\,ft$ $\quad L_{j_{F_K}} = 9 \times 10^4\,ft$

$P_2 = 187.6\,psi$ $\quad v_1 = 11.7\,ft\,sec^{-1}$ $\quad A_P \cdot v_1 = 270.6\,gpm$ $\quad D_{Di} = 1.61\,in$

$P_3 = 188.8\,psi$ $\quad F_{D3} \cdot v_3 = 0\,ft\,sec^{-1}$ $\quad F_{D3} \cdot A_P \cdot v_3 = 0\,gpm$

$P_5 = 69.9\,psi$ $\quad v_5 = 0\,ft\,sec^{-1}$ $\quad A_{S6}(F_K) \cdot v_5 = 0\,gpm$

$P_6 = 49.1\,psi$ $\quad F_{D6} \cdot v_6 = 0\,ft\,sec^{-1}$ $\quad F_{D6} \cdot A_f(D_{Di}) \cdot v_6 = 0\,gpm$

$P_8 = 69.7\,psi$ $\quad v_8 = 4.5\,ft\,sec^{-1}$ $\quad A_{S6}(F_K) \cdot v_8 = 270.6\,gpm$

$P_9 = 37.7\,psi$ $\quad F_{D9} \cdot v_9 = 42.6\,ft\,sec^{-1}$ $\quad F_{D9} \cdot A_f(D_{Di}) \cdot v_9 = 270.6\,gpm$

$P_{crack} = 3.8\,psi$ $\quad v_1 \cdot A_P = F_{D3} \cdot A_P \cdot v_3 + A_{S6}(F_K) \cdot v_5 + A_{S6}(F_K) \cdot v_8 = 270.6\,gpm$

(continuity check at break, OK)

$v_{crack} = 86.8\,ft\,sec^{-1}$

$R_e(D_{H_crack}(L_c, W_c), v_{crack}, \rho, \mu(\rho, t_C)) = 1 \times 10^5$

$P_2 - P_5 = 117.758\,psi$

**CH2MHILL Hanford Group, Inc.**

**EVALUATION ANALYSIS**

Calc. No. RPP-LJJ-005
Revision: 0
Page No. 13 of 31

Client: CH2M Hill Hanford Group, Inc.
Subject: Secondary Encasement Pipe Pressure Due to Primary Pipe Break in Waste Tank Cross-Site Transfer Piping System
Location: 200 Area - Hanford Site, Richland, Washington

WO/Job No. _____
Date: 9/12/2001 By: L. J. Julyk
Checked: 9/25/01 By: [illegible]
Revised: _____ By: _____

**Figure 1a. Case 0: Maximum Pressure in Cross-Site Encasement Pipe Due to Primary Pipe Break (Between SY-102 Pump Pit and SY-A Valve Pit) within Encasement Section of Length $L_s$ Starting at $L_o$ Relative to Transfer Pump for Supernate Waste Transfer at Temperature of 60 °C.**

$F_K = 0$ | Low point drain | $L_c = 10\,in$

$Z = 0\,ft$ | $t_C = 60\ ^oC$ | $\rho = 1.3\,\frac{kg}{liter}$ | $\mu(\rho, t_C) = 1.197\,cP$ | $D_{LDo_{F_K}} = 0\,in$ | $D_{Di} = 1.61\,in$ | $W_c = 0.1\,in$

$H = 6.72\,ft$ | $L_o = 0\,ft$ | $L_S = 339\,ft$ | $L_P = 51015\,ft$ | $L_{i_{F_K}} = 9\,ft$ | $\varepsilon_P = 2\,mil$ | $L_D(D_{Di}, F_K) = 7\,ft$ | $\varepsilon_c = 1\,mil$

$\Delta Z_D = -1\,ft$ | $H_o = 0\,ft$ | $H_S = 2.58\,ft$ | $F_{D3} = 0$ | $L_{j_{F_K}} = 9 \times 10^4\,ft$ | $\varepsilon_S = 5\,mil$ | $\varepsilon_D = 5\,mil$

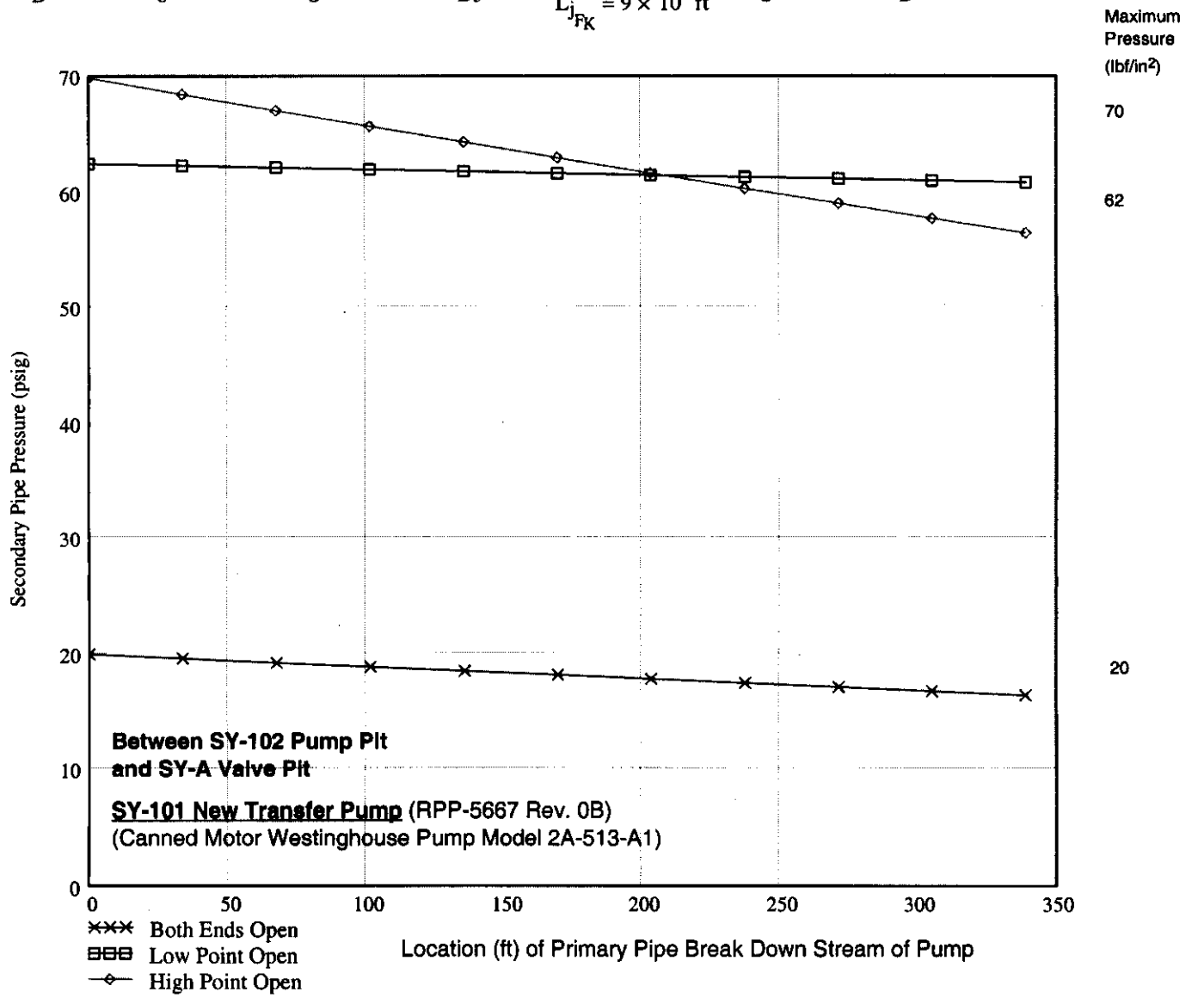

**CH2MHILL Hanford Group, Inc.**

**EVALUATION ANALYSIS**

Calc. No. RPP-LJJ-005
Revision: 0
Page No. 14 of 31

Client: CH2M Hill Hanford Group, Inc.
Subject: Secondary Encasement Pipe Pressure Due to Primary Pipe Break in Waste Tank Cross-Site Transfer Piping System
Location: 200 Area - Hanford Site, Richland, Washington

WO/Job No. _____
Date: 9/12/2001 By: L. J. Julyk
Checked: 9/25/01 By: [illegible]
Revised: _____ By: _____

**Supernate Transfer**

**Case 1 break between SY-A Valve Pit and Diversion Box**

$L_o := L_{SY102_SYAin}$ $L_o = 339\,ft$ start distance from pump of secondary encasement section under consideration

$H_o := Z_{SYAin} - Z_{SY102}$ $H_o = 2.58\,ft$ change in elevation of primary pipe from pump to point $L_o$

$L_S := L_{SYAin_DB1in}$ $L_S = 5635\,ft$ length of secondary encasement section under consideration between drains

$H_S := Z_{DB1in} - Z_{SY102}$ $H_S = 11.67\,ft$ change in elevation of primary pipe from pump to point $L_o + L_S$

Subcase X11 (low and high point drain, $F_{D6} = 1$ and $F_{D9} = 1$)*,
X10 (low point drain, FD6 = 1 and FD9 = 0)*,
X01 (high point drain, FD6 = 0 and FD9 = 1)

$\boxed{D_{Di} := D_{D2i}}$

**Initial guesses (X11)** $Q := 161.5 \cdot gpm$ $V_1 := \frac{Q}{A_P}$ $V_1 = 7.009\,\frac{ft}{sec}$ flow velocities

Both low and high point drains open

$\boxed{F_K := 1}$ $F_{D3} = 0$ $F_{D6} := 1$ $F_{D9} := 1$

$H_{P11} := H'_p(Q)$ pump head $H_{P11} = 469\,ft$

$p_2 := 62 \cdot psi$ primary pipe pressure just up stream of break

$p_3 := 62 \cdot psi$ primary pipe pressure just down stream of break

$p_5 := 39 \cdot psi$ secondary pipe pressure just up stream of break

$p_6 := 5.4 \cdot psi$ secondary pipe pressure at drain up stream of break

$p_8 := 39 \cdot psi$ secondary pipe pressure just down stream of break

$p_9 := 1 \cdot psi$ secondary pipe pressure at drain down stream of break

$V_5 := \frac{V_1 \cdot F_{D6} + \Delta V}{3.2}$

$V_6 := V_5 \cdot \frac{A_{S6}(F_K)}{A_f(D_{Di})}$ $\frac{A_{S6}(F_K)}{A_P} = 2.596$

$V_8 := \frac{V_1 \cdot F_{D9} + \Delta V}{80}$ $\frac{A_{S6}(F_K)}{A_f(D_{Di})} = 5.72$

$V_9 := V_8 \cdot \frac{A_{S6}(F_K)}{A_f(D_{Di})}$

$p_c := 26 \cdot psi$ apply conservation of mass (continuity) at break

$V_3 := V_1 - \frac{A_{S6}(F_K)}{A_P} \cdot (V_5 + V_8)$ $V_3 = 1.01\,\frac{ft}{sec}$

$V_c := \frac{A_{S6}(F_K)}{A_{crack}(L_c, W_c)} \cdot (V_5 + V_8)$ $V_c = 44.3\,\frac{ft}{sec}$

$p_{11} := (p_2\ p_3\ p_5\ p_6\ p_8\ p_9\ p_c)^T$ $V_{11} := (V_1\ V_3\ V_5\ V_6\ V_8\ V_9\ V_c)^T$

**use W-058 guide/anchor** $F_K = 1$

**CH2MHILL Hanford Group, Inc.**

**EVALUATION ANALYSIS**

Calc. No. RPP-LJJ-005
Revision: 0
Page No. 15 of 31

Client: CH2M Hill Hanford Group, Inc.
Subject: Secondary Encasement Pipe Pressure Due to Primary Pipe Break in Waste Tank Cross-Site Transfer Piping System
Location: 200 Area - Hanford Site, Richland, Washington

WO/Job No. _____
Date: 9/12/2001 By: L. J. Julyk
Checked: 9/25/01 By: R. Kellerson
Revised: _____ By: _____

**Initial guesses (X10)** $Q := 100 \cdot gpm$ $V_1 := \frac{Q}{A_P}$ $V_1 = 4.34 \frac{ft}{sec}$ flow velocities

Low point drain open

$F_K = 1$ $F_{D3} = 0$ $F_{D6} := 1$ $F_{D9} := 0$

$H_{P10} := H'_p(Q)$ pump head $H_{P10} = 515\,ft$

$p_2 := 50 \cdot psi$ primary pipe pressure just up stream of break

$p_3 := 50 \cdot psi$ primary pipe pressure just down stream of break

$p_5 := 20 \cdot psi$ secondary pipe pressure just up stream of break

$p_6 := 20 \cdot psi$ secondary pipe pressure at drain up stream of break

$p_8 := 20 \cdot psi$ secondary pipe pressure just down stream of break

$p_9 := 5 \cdot psi$ secondary pipe pressure at drain down stream of break

$V_5 := \frac{V_1 \cdot F_{D6} + \Delta V}{2.9}$

$V_6 := V_5 \cdot \frac{A_{S6}(F_K)}{A_f(D_{Di})}$ $\frac{A_{S6}(F_K)}{A_P} = 2.596$

$V_8 := \frac{V_1 \cdot F_{D9} + \Delta V}{50}$ $\frac{A_{S6}(F_K)}{A_f(D_{Di})} = 5.72$

$V_9 := V_8 \cdot \frac{A_{S6}(F_K)}{A_f(D_{Di})}$

$p_c := 5 \cdot psi$

apply conservation of mass (continuity) at break

$V_3 := V_1 - \frac{A_{S6}(F_K)}{A_P} \cdot (V_5 + V_8)$ $V_3 = 0.36 \frac{ft}{sec}$

$V_c := \frac{A_{S6}(F_K)}{A_{crack}(L_c, W_c)} \cdot (V_5 + V_8)$ $V_c = 29.4 \frac{ft}{sec}$

$p_{10} := (p_2\ p_3\ p_5\ p_6\ p_8\ p_9\ p_c)^T$ $V_{10} := (V_1\ V_3\ V_5\ V_6\ V_8\ V_9\ V_c)^T$

**Initial guesses (X01)** $Q := 227 \cdot gpm$ $V_1 := \frac{Q}{A_P}$ $V_1 = 9.852 \frac{ft}{sec}$ flow velocities

High point drain open

$F_K = 1$ $F_{D3} = 0$ $F_{D6} := 0$ $F_{D9} := 1$

$H_{P01} := H'_p(Q)$ pump head $H_{P01} = 395\,ft$

$p_2 := 204 \cdot psi$ primary pipe pressure just up stream of break

$p_3 := 204 \cdot psi$ primary pipe pressure just down stream of break

$p_5 := 154 \cdot psi$ secondary pipe pressure just up stream of break

$p_6 := 124 \cdot psi$ secondary pipe pressure at drain up stream of break

$p_8 := 154 \cdot psi$ secondary pipe pressure just down stream of break

$p_9 := 9.05 \cdot psi$ secondary pipe pressure at drain down stream of break

$V_5 := \frac{V_1 \cdot F_{D6} + \Delta V}{10}$

$V_6 := V_5 \cdot \frac{A_{S6}(F_K)}{A_f(D_{Di})}$ $\frac{A_{S6}(F_K)}{A_P} = 2.596$

$V_8 := \frac{V_1 \cdot F_{D9} + \Delta V}{3.5}$ $\frac{A_{S6}(F_K)}{A_f(D_{Di})} = 5.72$

$V_9 := V_8 \cdot \frac{A_{S6}(F_K)}{A_f(D_{Di})}$

$p_c := 126 \cdot psi$

apply conservation of mass (continuity) at break

$V_3 := V_1 - \frac{A_{S6}(F_K)}{A_P} \cdot (V_5 + V_8)$ $V_3 = 2.44 \frac{ft}{sec}$

$V_c := \frac{A_{S6}(F_K)}{A_{crack}(L_c, W_c)} \cdot (V_5 + V_8)$ $V_c = 54.8 \frac{ft}{sec}$

$p_{01} := (p_2\ p_3\ p_5\ p_6\ p_8\ p_9\ p_c)^T$ $V_{01} := (V_1\ V_3\ V_5\ V_6\ V_8\ V_9\ V_c)^T$

0 1 2 3 4 5 6 0 1 2 3 4 5 6

**CH2MHILL Hanford Group, Inc.**

**EVALUATION ANALYSIS**

Calc. No. RPP-LJJ-005
Revision: 0
Page No. 16 of 31

Client: CH2M Hill Hanford Group, Inc.
Subject: Secondary Encasement Pipe Pressure Due to Primary Pipe Break in Waste Tank Cross-Site Transfer Piping System
Location: 200 Area - Hanford Site, Richland, Washington

WO/Job No. _____
Date: 9/12/2001 By: L. J. Julyk
Checked: 9/25/01 By: R. P. Schlosser
Revised: _____ By: _____

**Case 1 (X11)**

**SY-101 New Transfer Pump** (RPP-5667 Rev. 0B)
(Canned Motor Westinghouse Pump Model 2A-513-A1)

Input==========

$L_o = 339\,ft$ $\quad H = 7\,ft$ $\quad \varepsilon_P = 2\,mil$

$L_S = 5635\,ft$ $\quad \rho = 1.3\,\frac{kg}{liter}$ $\quad Z = 0\,ft$ $\quad \varepsilon_S = 5\,mil$ $\quad D_{LDo_{F_K}} = 0.31\,in$ $\quad F_K = 1$

$L_P = 51015\,ft$ $\quad F_{D3} = 0$ $\quad \varepsilon_D = 5\,mil$ $\quad L_c = 10\,in$

$x_B := 0 \cdot ft + L_c$ $\quad t_C = 60\,°C$ $\quad D_{Di} = 2.067\,in$ $\quad \Delta Z_D = -1\,ft$ $\quad L_D(D_{Di}, F_K) = 21.086\,ft$ $\quad W_c = 0.1\,in$

$F_{D6} := 1$ $\quad F_{D9} := 1$ $\quad J(F_K, L_o, x_B) = 0$ $\quad N(F_K, L_o, L_S, x_B) = 10$ $\quad \varepsilon_c = 1\,mil$

$I(F_K, L_o, x_B) = 0$ $\quad M(F_K, L_o, L_S, x_B) = 460$

$$\begin{pmatrix} h_{P11} \\ P_{11} \\ v_{11} \end{pmatrix} := ff(L_o, H_o, L_S, H_S, x_B, \rho, t_C, \varepsilon_P, \varepsilon_S, \varepsilon_D, D_{Di}, F_K, F_{D3}, F_{D6}, F_{D9}, \Delta Z_D, L_P, H, Z, L_c, W_c, \varepsilon_c, H_{P11}, p_{11}, V_{11})$$

$$\begin{pmatrix} P_2 \\ P_3 \\ P_5 \\ P_6 \\ P_8 \\ P_9 \\ P_{crack} \end{pmatrix} := P_{11} \quad \begin{pmatrix} v_1 \\ v_3 \\ v_5 \\ v_6 \\ v_8 \\ v_9 \\ v_{crack} \end{pmatrix} := v_{11} \qquad P_{11} = \begin{pmatrix} 146.24 \\ 147.492 \\ 20.975 \\ 15.531 \\ 21.087 \\ 0.546 \\ -49.073 \end{pmatrix} psi \quad v_{11} = \begin{pmatrix} 12.108 \\ 1.898 \\ 3.708 \\ 21.208 \\ 0.956 \\ 5.466 \\ 89.507 \end{pmatrix} ft\,sec^{-1}$$

Results----------

$h_{P11} = 320\,ft$ $\quad \mu(\rho, t_C) = 1.197\,cP$ $\quad L_{i_{F_K}} = 12\,ft$ $\quad L_{j_{F_K}} = 552\,ft$

$P_2 = 146.2\,psi$ $\quad v_1 = 12.1\,ft\,sec^{-1}$ $\quad A_P \cdot v_1 = 279\,gpm$ $\quad D_{Di} = 2.067\,in$

$P_3 = 147.5\,psi$ $\quad F_{D3} \cdot v_3 = 0\,ft\,sec^{-1}$ $\quad F_{D3} \cdot A_P \cdot v_3 = 0\,gpm$

$P_5 = 21\,psi$ $\quad v_5 = 3.7\,ft\,sec^{-1}$ $\quad A_{S6}(F_K) \cdot v_5 = 221.8\,gpm$

$P_6 = 15.5\,psi$ $\quad F_{D6} \cdot v_6 = 21.2\,ft\,sec^{-1}$ $\quad F_{D6} \cdot A_f(D_{Di}) \cdot v_6 = 221.8\,gpm$

$P_8 = 21.1\,psi$ $\quad v_8 = 1\,ft\,sec^{-1}$ $\quad A_{S6}(F_K) \cdot v_8 = 57.2\,gpm$

$P_9 = 0.5\,psi$ $\quad F_{D9} \cdot v_9 = 5.5\,ft\,sec^{-1}$ $\quad F_{D9} \cdot A_f(D_{Di}) \cdot v_9 = 57.2\,gpm$

$P_{crack} = -49.1\,psi$ $\quad v_1 \cdot A_P = F_{D3} \cdot A_P \cdot v_3 + A_{S6}(F_K) \cdot v_5 + A_{S6}(F_K) \cdot v_8 = 279\,gpm$

(continuity check at break, OK)

$v_{crack} = 89.5\,ft\,sec^{-1}$

$R_e(D_{H_crack}(L_c, W_c), v_{crack}, \rho, \mu(\rho, t_C)) = 1 \times 10^5$

$P_2 - P_5 = 125.265\,psi$

**CH2MHILL Hanford Group, Inc.**

**EVALUATION ANALYSIS**

Calc. No. RPP-LJJ-005
Revision: 0
Page No. 17 of 31

Client: CH2M Hill Hanford Group, Inc.
Subject: Secondary Encasement Pipe Pressure Due to Primary Pipe Break in Waste Tank Cross-Site Transfer Piping System
Location: 200 Area - Hanford Site, Richland, Washington

WO/Job No. _____
Date: 9/12/2001 By: L. J. Julyk
Checked: 9/25/01 By: [illegible]
Revised: _____ By: _____

**Case 1 (X10)**

**SY-101 New Transfer Pump** (RPP-5667 Rev. 0B)
(Canned Motor Westinghouse Pump Model 2A-513-A1)

Input==========

$L_o = 339\,ft$ $\quad H = 7\,ft$ $\quad \varepsilon_P = 2\,mil$

$\boxed{L_S = 5635\,ft}$ $\quad \rho = 1.3\,\frac{kg}{liter}$ $\quad Z = 0\,ft$ $\quad \varepsilon_S = 5\,mil$ $\quad D_{LDo_{F_K}} = 0.31\,in$ $\quad F_K = 1$

$L_P = 51015\,ft$ $\quad F_{D3} = 0$ $\quad \varepsilon_D = 5\,mil$ $\quad L_c = 10\,in$

$\boxed{x_B := 0 \cdot ft + L_c}$ $\quad t_C = 60\,^{\circ}C$ $\quad D_{Di} = 2.067\,in$ $\quad \Delta Z_D = -1\,ft$ $\quad L_D(D_{Di}, F_K) = 21.086\,ft$ $\quad W_c = 0.1\,in$

$F_{D6} := 1$ $\quad F_{D9} := 0$ $\quad J(F_K, L_o, x_B) = 0$ $\quad N(F_K, L_o, L_S, x_B) = 10$ $\quad \varepsilon_c = 1\,mil$

$I(F_K, L_o, x_B) = 0$ $\quad M(F_K, L_o, L_S, x_B) = 460$

$$\begin{pmatrix} h_{P10} \\ P_{10} \\ v_{10} \end{pmatrix} := ff(L_o, H_o, L_S, H_S, x_B, \rho, t_C, \varepsilon_P, \varepsilon_S, \varepsilon_D, D_{Di}, F_K, F_{D3}, F_{D6}, F_{D9}, \Delta Z_D, L_P, H, Z, L_c, W_c, \varepsilon_c, H_{P10}, p_{10}, V_{10})$$

$$\begin{pmatrix} P_2 \\ P_3 \\ P_5 \\ P_6 \\ P_8 \\ P_9 \\ P_{crack} \end{pmatrix} := P_{10} \qquad \begin{pmatrix} v_1 \\ v_3 \\ v_5 \\ v_6 \\ v_8 \\ v_9 \\ v_{crack} \end{pmatrix} := v_{10}$$

Results----------

$h_{P10} = 329\,ft$ $\quad \mu(\rho, t_C) = 1.197\,cP$ $\quad L_{i_{F_K}} = 12\,ft$ $\quad L_{j_{F_K}} = 552\,ft$

$P_2 = 152.4\,psi$ $\quad v_1 = 11.9\,ft\,sec^{-1}$ $\quad A_P \cdot v_1 = 273.4\,gpm$ $\quad D_{Di} = 2.067\,in$

$P_3 = 153.6\,psi$ $\quad F_{D3} \cdot v_3 = 0\,ft\,sec^{-1}$ $\quad F_{D3} \cdot A_P \cdot v_3 = 0\,gpm$

$P_5 = 32.1\,psi$ $\quad v_5 = 4.6\,ft\,sec^{-1}$ $\quad A_{S6}(F_K) \cdot v_5 = 273.4\,gpm$

$P_6 = 23.8\,psi$ $\quad F_{D6} \cdot v_6 = 26.1\,ft\,sec^{-1}$ $\quad F_{D6} \cdot A_f(D_{Di}) \cdot v_6 = 273.4\,gpm$

$P_8 = 32.3\,psi$ $\quad v_8 = 0\,ft\,sec^{-1}$ $\quad A_{S6}(F_K) \cdot v_8 = 0\,gpm$

$P_9 = 21.7\,psi$ $\quad F_{D9} \cdot v_9 = 0\,ft\,sec^{-1}$ $\quad F_{D9} \cdot A_f(D_{Di}) \cdot v_9 = 0\,gpm$

$P_{crack} = -35.1\,psi$ $\quad v_1 \cdot A_P = F_{D3} \cdot A_P \cdot v_3 + A_{S6}(F_K) \cdot v_5 + A_{S6}(F_K) \cdot v_8 = 273.4\,gpm$

(continuity check at break, OK)

$v_{crack} = 87.7\,ft\,sec^{-1}$

$R_e(D_{H_crack}(L_c, W_c), v_{crack}, \rho, \mu(\rho, t_C)) = 1 \times 10^5$

$P_2 - P_5 = 120.361\,psi$

**CH2MHILL Hanford Group, Inc.**

**EVALUATION ANALYSIS**

Calc. No. RPP-LJJ-005
Revision: 0
Page No. 18 of 31

Client: CH2M Hill Hanford Group, Inc.
Subject: Secondary Encasement Pipe Pressure Due to Primary Pipe Break in Waste Tank Cross-Site Transfer Piping System
Location: 200 Area - Hanford Site, Richland, Washington

WO/Job No. _____
Date: 9/12/2001 By: L. J. Julyk
Checked: 9/25/01 By: [signature]
Revised: _____ By: _____

**Case 1 (X01)**

Input==========

**SY-101 New Transfer Pump** (RPP-5667 Rev. 0B)
(Canned Motor Westinghouse Pump Model 2A-513-A1)

$L_o = 339\,ft$ $\quad H = 7\,ft$ $\quad \varepsilon_P = 2\,mil$

$\boxed{L_S = 5635\,ft}$ $\quad \rho = 1.3\,\frac{kg}{liter}$ $\quad Z = 0\,ft$ $\quad \varepsilon_S = 5\,mil$ $\quad D_{LDo_{F_K}} = 0.31\,in$ $\quad F_K = 1$

$L_P = 51015\,ft$ $\quad F_{D3} = 0$ $\quad \varepsilon_D = 5\,mil$

$\boxed{x_B := 0 \cdot ft + L_o}$ $\quad t_C = 60\,°C$ $\quad D_{Di} = 2.067\,in$ $\quad \Delta Z_D = -1\,ft$ $\quad L_D(D_{Di}, F_K) = 21.086\,ft$ $\quad L_c = 10\,in$

$W_c = 0.1\,in$

$F_{D6} := 0$ $\quad F_{D9} := 1$ $\quad J(F_K, L_o, x_B) = 0$ $\quad N(F_K, L_o, L_S, x_B) = 10$ $\quad \varepsilon_c = 1\,mil$

$I(F_K, L_o, x_B) = 0$ $\quad M(F_K, L_o, L_S, x_B) = 460$

$$\begin{pmatrix} h_{P01} \\ P_{01} \\ v_{01} \end{pmatrix} := ff(L_o, H_o, L_S, H_S, x_B, \rho, t_C, \varepsilon_P, \varepsilon_S, \varepsilon_D, D_{Di}, F_K, F_{D3}, F_{D6}, F_{D9}, \Delta Z_D, L_P, H, Z, L_c, W_c, \varepsilon_c, H_{P01}, p_{01}, V_{01})$$

$$\begin{pmatrix} P_2 \\ P_3 \\ P_5 \\ P_6 \\ P_8 \\ P_9 \\ P_{crack} \end{pmatrix} := P_{01} \qquad \begin{pmatrix} v_1 \\ v_3 \\ v_5 \\ v_6 \\ v_8 \\ v_9 \\ v_{crack} \end{pmatrix} := v_{01}$$

Results----------

$h_{P01} = 441\,ft$ $\quad \mu(\rho, t_C) = 1.197\,cP$ $\quad L_{i_{F_K}} = 12\,ft$ $\quad L_{j_{F_K}} = 552\,ft$

$P_2 = 231.8\,psi$ $\quad v_1 = 8.2\,ft\,sec^{-1}$ $\quad A_P \cdot v_1 = 188.6\,gpm$ $\quad D_{Di} = 2.067\,in$

$P_3 = 232.3\,psi$ $\quad F_{D3} \cdot v_3 = 0\,ft\,sec^{-1}$ $\quad F_{D3} \cdot A_P \cdot v_3 = 0\,gpm$

$P_5 = 174.6\,psi$ $\quad v_5 = 0\,ft\,sec^{-1}$ $\quad A_{S6}(F_K) \cdot v_5 = 0\,gpm$

$P_6 = 139.8\,psi$ $\quad F_{D6} \cdot v_6 = 0\,ft\,sec^{-1}$ $\quad F_{D6} \cdot A_f(D_{Di}) \cdot v_6 = 0\,gpm$

$P_8 = 174.5\,psi$ $\quad v_8 = 3.2\,ft\,sec^{-1}$ $\quad A_{S6}(F_K) \cdot v_8 = 188.6\,gpm$

$P_9 = 11.1\,psi$ $\quad F_{D9} \cdot v_9 = 18\,ft\,sec^{-1}$ $\quad F_{D9} \cdot A_f(D_{Di}) \cdot v_9 = 188.6\,gpm$

$P_{crack} = 142.5\,psi$ $\quad v_1 \cdot A_P = F_{D3} \cdot A_P \cdot v_3 + A_{S6}(F_K) \cdot v_5 + A_{S6}(F_K) \cdot v_8 = 188.6\,gpm$

(continuity check at break, OK)

$v_{crack} = 60.5\,ft\,sec^{-1}$

$R_e(D_{H_crack}(L_c, W_c), v_{crack}, \rho, \mu(\rho, t_C)) = 1 \times 10^5$

$P_2 - P_5 = 57.234\,psi$

**CH2MHILL Hanford Group, Inc.**

**EVALUATION ANALYSIS**

Calc. No. RPP-LJJ-005
Revision: 0
Page No. 19 of 31

Client: CH2M Hill Hanford Group, Inc.
Subject: Secondary Encasement Pipe Pressure Due to Primary Pipe Break in Waste Tank Cross-Site Transfer Piping System
Location: 200 Area - Hanford Site, Richland, Washington

WO/Job No. _____
Date: 9/12/2001 By: L. J. Julyk
Checked: 9/25/01 By: R. Schlosser
Revised: _____ By: _____

**Figure 1b. Case 1: Maximum Pressure in Cross-Site Encasement Pipe Due to Primary Pipe Break (Between SY-A Valve Pit and Diversion Box) within Encasement Section of Length $L_s$ Starting at $L_o$ Relative to Transfer Pump for Supernate Waste Transfer at Temperature of 60 °C.**

$F_K = 1$ High point rupture disk $L_c = 10\,in$

$Z = 0\,ft$ $t_C = 60\,°C$ $\rho = 1.3\,\frac{kg}{liter}$ $\mu(\rho, t_C) = 1.197\,cP$ $D_{LDo_{F_K}} = 0.31\,in$ $D_{Di} = 2.067\,in$ $W_c = 0.1\,in$

$H = 6.72\,ft$ $L_o = 339\,ft$ $L_S = 5635\,ft$ $L_P = 51015\,ft$ $L_{i_{F_K}} = 12\,ft$ $\varepsilon_P = 2\,mil$ $L_D(D_{Di}, F_K) = 21.1\,ft$ $\varepsilon_c = 1\,mil$

$\Delta Z_D = -1\,ft$ $H_o = 2.58\,ft$ $H_S = 11.67\,ft$ $F_{D3} = 0$ $L_{j_{F_K}} = 552\,ft$ $\varepsilon_S = 5\,mil$ $\varepsilon_D = 5\,mil$

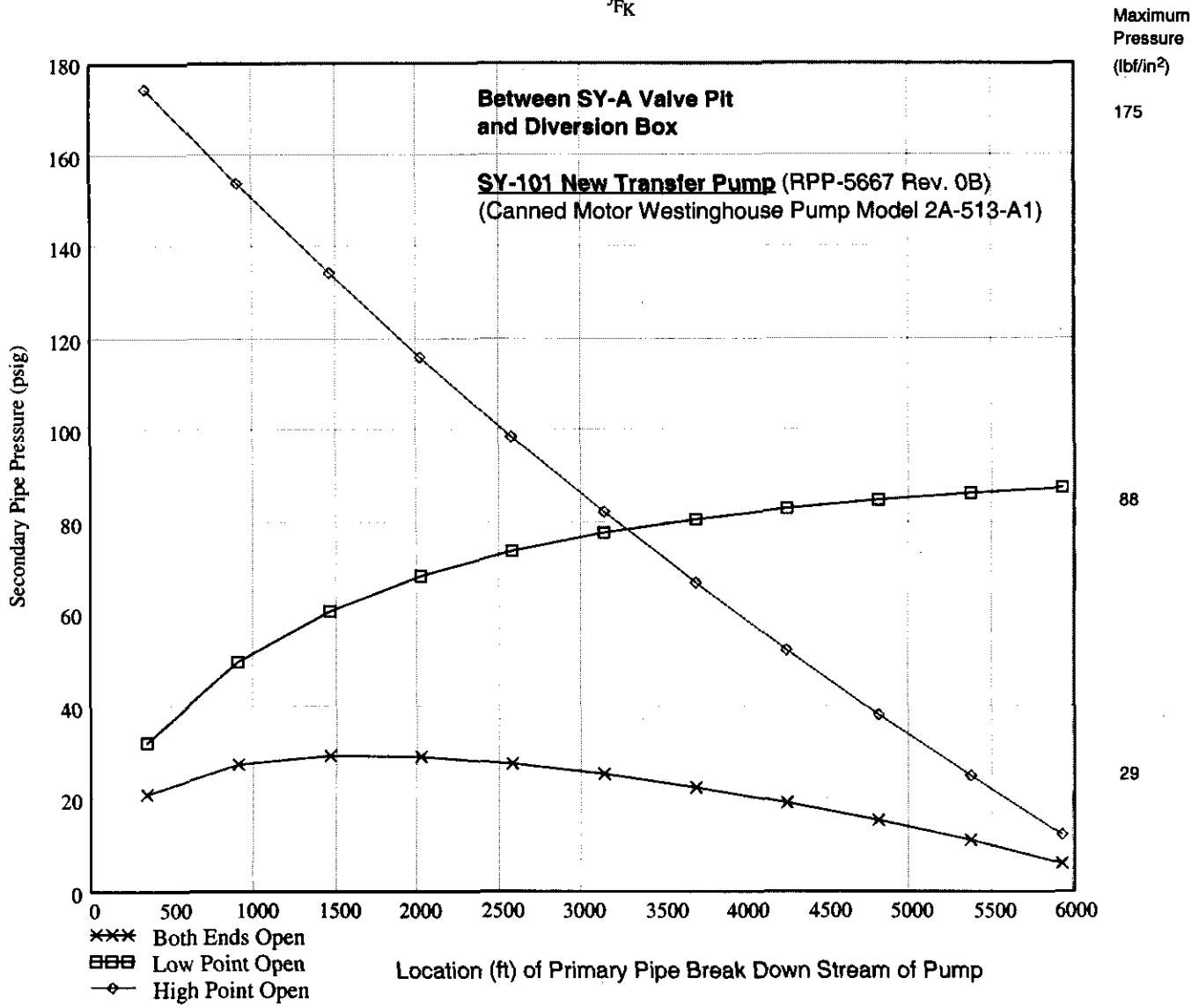

**CH2MHILL Hanford Group, Inc.**

**EVALUATION ANALYSIS**



Client: CH2M Hill Hanford Group, Inc. WO/Job No. _____
Subject: Secondary Encasement Pipe Pressure Due to Primary Pipe Break in Waste Tank Cross-Site Transfer Piping System
Date: 9/12/2001 By: L. J. Julyk
Checked: 9/25/01 By: R. Schlosser
Location: 200 Area - Hanford Site, Richland, Washington
Revised: _____ By: _____

**Supernate Transfer**

**Case 2 break between Diversion Box and Vent Station**

$L_o := L_{SY102_DB1out}$ $L_o = 6600\,ft$ start distance from pump of secondary encasement section under consideration

$H_o := Z_{DB1out} - Z_{SY102}$ $H_o = 11.8\,ft$ change in elevation of primary pipe from pump to point $L_o$

$L_S := L_{DB1out_VSin}$ $L_S = 13631\,ft$ length of secondary encasement section under consideration between drains

$H_S := Z_{VSin} - Z_{SY102}$ $H_S = 85.63\,ft$ change in elevation of primary pipe from pump to point $L_o + L_S$

Subcase X11 (low and high point drain, $F_{D6} = 1$ and $F_{D9} = 1$),
X10 (low point drain, FD6 = 1 and FD9 = 0),
X01 (high point drain, FD6 = 0 and FD9 = 1)

$D_{Di} = 2.067\,in$

**Initial guesses (X11)** $Q := 127 \cdot gpm$ $V_1 := \frac{Q}{A_P}$ $V_1 = 5.512\,\frac{ft}{sec}$ flow velocities

Both low and high point drains open

$F_K = 1$ $F_{D3} = 0$ $F_{D6} := 1$ $F_{D9} := 1$

$H_{P11} := H'_p(Q)$ pump head $H_{P11} = 498\,ft$

$p_2 := 58 \cdot psi$ primary pipe pressure just up stream of break

$p_3 := 58 \cdot psi$ primary pipe pressure just down stream of break

$p_5 := 32 \cdot psi$ secondary pipe pressure just up stream of break

$p_6 := 4 \cdot psi$ secondary pipe pressure at drain up stream of break

$p_8 := 32 \cdot psi$ secondary pipe pressure just down stream of break

$p_9 := 1 \cdot psi$ secondary pipe pressure at drain down stream of break

$V_5 := \frac{V_1 \cdot F_{D6} + \Delta V}{2.8}$

$V_6 := V_5 \cdot \frac{A_{S6}(F_K)}{A_f(D_{Di})}$ $\frac{A_{S6}(F_K)}{A_P} = 2.596$

$V_8 := \frac{V_1 \cdot F_{D9} + \Delta V}{80}$ $\frac{A_{S6}(F_K)}{A_f(D_{Di})} = 5.72$

$V_9 := V_8 \cdot \frac{A_{S6}(F_K)}{A_f(D_{Di})}$

$p_c := 16 \cdot psi$ apply conservation of mass (continuity) at break

$V_3 := V_1 - \frac{A_{S6}(F_K)}{A_P} \cdot (V_5 + V_8)$ $V_3 = 0.13\,\frac{ft}{sec}$

$V_c := \frac{A_{S6}(F_K)}{A_{crack}(L_c, W_c)} \cdot (V_5 + V_8)$ $V_c = 39.8\,\frac{ft}{sec}$

$p_{11} := (p_2\ p_3\ p_5\ p_6\ p_8\ p_9\ p_c)^T$ $V_{11} := (V_1\ V_3\ V_5\ V_6\ V_8\ V_9\ V_c)^T$

**CH2MHILL Hanford Group, Inc.**

**EVALUATION ANALYSIS**

Calc. No. RPP-LJJ-005
Revision: 0
Page No. 21 of 31

Client: CH2M Hill Hanford Group, Inc. WO/Job No. _____
Subject: Secondary Encasement Pipe Pressure Due to Primary Pipe Break in Waste Tank Cross-Site Transfer Piping System
Date: 9/12/2001 By: L. J. Julyk
Checked: 9/25/01 By: R. R. Kellerase
Location: 200 Area - Hanford Site, Richland, Washington
Revised: _____ By: _____

**Initial guesses (X10)** $Q := 161 \cdot gpm$ $V_1 := \frac{Q}{A_P}$ $V_1 = 6.987 \frac{ft}{sec}$ flow velocities

Low point drain open

$F_K = 1$ $F_{D3} = 0$ $F_{D6} := 1$ $F_{D9} := 0$

$H_{P10} := H'_p(Q)$ pump head $H_{P10} = 469\,ft$

$p_2 := 62 \cdot psi$ primary pipe pressure just up stream of break

$p_3 := 62 \cdot psi$ primary pipe pressure just down stream of break

$p_5 := 39 \cdot psi$ secondary pipe pressure just up stream of break

$p_6 := 5 \cdot psi$ secondary pipe pressure at drain up stream of break

$p_8 := 39 \cdot psi$ secondary pipe pressure just down stream of break

$p_9 := 1 \cdot psi$ secondary pipe pressure at drain down stream of break

$V_5 := \frac{V_1 \cdot F_{D6} + \Delta V}{3.07}$

$V_6 := V_5 \cdot \frac{A_{S6}(F_K)}{A_f(D_{Di})}$ $\frac{A_{S6}(F_K)}{A_P} = 2.596$

$V_8 := \frac{V_1 \cdot F_{D9} + \Delta V}{50}$ $\frac{A_{S6}(F_K)}{A_f(D_{Di})} = 5.72$

$V_9 := V_8 \cdot \frac{A_{S6}(F_K)}{A_f(D_{Di})}$

$p_c := 26 \cdot psi$

apply conservation of mass (continuity) at break

$V_3 := V_1 - \frac{A_{S6}(F_K)}{A_P} \cdot (V_5 + V_8)$ $V_3 = 0.99 \frac{ft}{sec}$

$V_c := \frac{A_{S6}(F_K)}{A_{crack}(L_c, W_c)} \cdot (V_5 + V_8)$ $V_c = 44.3 \frac{ft}{sec}$

$p_{10} := (p_2\ p_3\ p_5\ p_6\ p_8\ p_9\ p_c)^T$ $V_{10} := (V_1\ V_3\ V_5\ V_6\ V_8\ V_9\ V_c)^T$

**Initial guesses (X01)** $Q := 110 \cdot gpm$ $V_1 := \frac{Q}{A_P}$ $V_1 = 4.774 \frac{ft}{sec}$ flow velocities

High point drain open

$F_K = 1$ $F_{D3} = 0$ $F_{D6} := 0$ $F_{D9} := 1$

$H_{P01} := H'_p(Q)$ pump head $H_{P01} = 509\,ft$

$p_2 := 125 \cdot psi$ primary pipe pressure just up stream of break

$p_3 := 125 \cdot psi$ primary pipe pressure just down stream of break

$p_5 := 120 \cdot psi$ secondary pipe pressure just up stream of break

$p_6 := 112 \cdot psi$ secondary pipe pressure at drain up stream of break

$p_8 := 120 \cdot psi$ secondary pipe pressure just down stream of break

$p_9 := 1 \cdot psi$ secondary pipe pressure at drain down stream of break

$V_5 := \frac{V_1 \cdot F_{D6} + \Delta V}{3}$

$V_6 := V_5 \cdot \frac{A_{S6}(F_K)}{A_f(D_{Di})}$ $\frac{A_{S6}(F_K)}{A_P} = 2.596$

$V_8 := \frac{V_1 \cdot F_{D9} + \Delta V}{4.5}$ $\frac{A_{S6}(F_K)}{A_f(D_{Di})} = 5.72$

$V_9 := V_8 \cdot \frac{A_{S6}(F_K)}{A_f(D_{Di})}$

$p_c := 118 \cdot psi$

apply conservation of mass (continuity) at break

$V_3 := V_1 - \frac{A_{S6}(F_K)}{A_P} \cdot (V_5 + V_8)$ $V_3 = 1.88 \frac{ft}{sec}$

$V_c := \frac{A_{S6}(F_K)}{A_{crack}(L_c, W_c)} \cdot (V_5 + V_8)$ $V_c = 21.4 \frac{ft}{sec}$

$p_{01} := (p_2\ p_3\ p_5\ p_6\ p_8\ p_9\ p_c)^T$ $V_{01} := (V_1\ V_3\ V_5\ V_6\ V_8\ V_9\ V_c)^T$

0 1 2 3 4 5 6 0 1 2 3 4 5 6

**CH2MHILL Hanford Group, Inc.**

**EVALUATION ANALYSIS**

Calc. No. RPP-LJJ-005
Revision: 0
Page No. 22 of 31

Client: CH2M Hill Hanford Group, Inc.
Subject: Secondary Encasement Pipe Pressure Due to Primary Pipe Break in Waste Tank Cross-Site Transfer Piping System
Location: 200 Area - Hanford Site, Richland, Washington

WO/Job No. _____
Date: 9/12/2001 By: L. J. Julyk
Checked: [illegible] By: [illegible]
Revised: _____ By: _____

**Case 2 (X11)**

**SY-101 New Transfer Pump** (RPP-5667 Rev. 0B)
(Canned Motor Westinghouse Pump Model 2A-513-A1)

Input==========

$L_o = 6600\,ft$ $\quad H = 7\,ft$ $\quad \varepsilon_P = 2\,mil$

$L_S = 13631\,ft$ $\quad \rho = 1.3\,\frac{kg}{liter}$ $\quad Z = 0\,ft$ $\quad \varepsilon_S = 5\,mil$ $\quad D_{LDo_{F_K}} = 0.31\,in$ $\quad F_K = 1$

$L_P = 51015\,ft$ $\quad F_{D3} = 0$ $\quad \varepsilon_D = 5\,mil$ $\quad L_c = 10\,in$

$x_B := 2550 \cdot ft + L_o$ $\quad t_C = 60\ ^\circ C$ $\quad D_{Di} = 2.067\,in$ $\quad \Delta Z_D = -1\,ft$ $\quad L_D(D_{Di}, F_K) = 21.086\,ft$ $\quad W_c = 0.1\,in$

$F_{D6} := 1$ $\quad F_{D9} := 1$ $\quad J(F_K, L_o, x_B) = 5$ $\quad N(F_K, L_o, L_S, x_B) = 20$ $\quad \varepsilon_c = 1\,mil$

$I(F_K, L_o, x_B) = 208$ $\quad M(F_K, L_o, L_S, x_B) = 903$

$$\begin{pmatrix} h_{P11} \\ P_{11} \\ v_{11} \end{pmatrix} := ff(L_o, H_o, L_S, H_S, x_B, \rho, t_C, \varepsilon_P, \varepsilon_S, \varepsilon_D, D_{Di}, F_K, F_{D3}, F_{D6}, F_{D9}, \Delta Z_D, L_P, H, Z, L_c, W_c, \varepsilon_c, H_{P11}, p_{11}, V_{11})$$

$$\begin{pmatrix} P_2 \\ P_3 \\ P_5 \\ P_6 \\ P_8 \\ P_9 \\ P_{crack} \end{pmatrix} := P_{11} \quad \begin{pmatrix} v_1 \\ v_3 \\ v_5 \\ v_6 \\ v_8 \\ v_9 \\ v_{crack} \end{pmatrix} := v_{11} \qquad P_{11} = \begin{pmatrix} 60.714 \\ 60.977 \\ 33.23 \\ 5.041 \\ 33.272 \\ -0.563 \\ 17.892 \end{pmatrix} psi \quad v_{11} = \begin{pmatrix} 5.668 \\ 1.433 \\ 2.177 \\ 12.453 \\ 6.157 \times 10^{-3} \\ 0.035 \\ 41.904 \end{pmatrix} ft\,sec^{-1}$$

Results----------

$h_{P11} = 495\,ft$ $\quad \mu(\rho, t_C) = 1.197\,cP$ $\quad L_{i_{F_K}} = 12\,ft$ $\quad L_{j_{F_K}} = 552\,ft$

$P_2 = 60.7\,psi$ $\quad v_1 = 5.7\,ft\,sec^{-1}$ $\quad A_P \cdot v_1 = 130.6\,gpm$ $\quad D_{Di} = 2.067\,in$

$P_3 = 61\,psi$ $\quad F_{D3} \cdot v_3 = 0\,ft\,sec^{-1}$ $\quad F_{D3} \cdot A_P \cdot v_3 = 0\,gpm$

$P_5 = 33.2\,psi$ $\quad v_5 = 2.2\,ft\,sec^{-1}$ $\quad A_{S6}(F_K) \cdot v_5 = 130.2\,gpm$

$P_6 = 5\,psi$ $\quad F_{D6} \cdot v_6 = 12.5\,ft\,sec^{-1}$ $\quad F_{D6} \cdot A_f(D_{Di}) \cdot v_6 = 130.2\,gpm$

$P_8 = 33.3\,psi$ $\quad v_8 = 6.2 \times 10^{-3}\,ft\,sec^{-1}$ $\quad A_{S6}(F_K) \cdot v_8 = 0.4\,gpm$

$P_9 = -0.6\,psi$ $\quad F_{D9} \cdot v_9 = 0\,ft\,sec^{-1}$ $\quad F_{D9} \cdot A_f(D_{Di}) \cdot v_9 = 0.4\,gpm$

$P_{crack} = 17.9\,psi$ $\quad v_1 \cdot A_P = F_{D3} \cdot A_P \cdot v_3 + A_{S6}(F_K) \cdot v_5 + A_{S6}(F_K) \cdot v_8 = 130.6\,gpm$

(continuity check at break, OK)

$v_{crack} = 41.9\,ft\,sec^{-1}$

$R_e(D_{H_crack}(L_c, W_c), v_{crack}, \rho, \mu(\rho, t_C)) = 7 \times 10^4$

$P_2 - P_5 = 27.484\,psi$

**CH2MHILL Hanford Group, Inc.**

**EVALUATION ANALYSIS**

Calc. No. RPP-LJJ-005
Revision: 0
Page No. 23 of 31

Client: CH2M Hill Hanford Group, Inc.
Subject: Secondary Encasement Pipe Pressure Due to Primary Pipe Break in Waste Tank Cross-Site Transfer Piping System
Location: 200 Area - Hanford Site, Richland, Washington

WO/Job No. _____
Date: 9/12/2001 By: L. J. Julyk
Checked: 9/25/01 By: [illegible]
Revised: _____ By: _____

**Case 2 (X10)**

**SY-101 New Transfer Pump** (RPP-5667 Rev. 0B)
(Canned Motor Westinghouse Pump Model 2A-513-A1)

Input==========

$L_o = 6600\,ft$ $\quad H = 7\,ft$ $\quad \varepsilon_P = 2\,mil$

$\boxed{L_S = 13631\,ft}$ $\quad \rho = 1.3\,\frac{kg}{liter}$ $\quad Z = 0\,ft$ $\quad \varepsilon_S = 5\,mil$ $\quad D_{LDo_{F_K}} = 0.31\,in$ $\quad F_K = 1$

$L_P = 51015\,ft$ $\quad F_{D3} = 0$ $\quad \varepsilon_D = 5\,mil$ $\quad L_c = 10\,in$

$\boxed{x_B := 3000 \cdot ft + L_o}$ $\quad t_C = 60\,°C$ $\quad D_{Di} = 2.067\,in$ $\quad \Delta Z_D = -1\,ft$ $\quad L_D(D_{Di}, F_K) = 21.086\,ft$ $\quad W_c = 0.1\,in$

$F_{D6} := 1$ $\quad F_{D9} := 0$ $\quad J(F_K, L_o, x_B) = 5$ $\quad N(F_K, L_o, L_S, x_B) = 19$ $\quad \varepsilon_c = 1\,mil$

$I(F_K, L_o, x_B) = 245$ $\quad M(F_K, L_o, L_S, x_B) = 867$

$$\begin{pmatrix} h_{P10} \\ P_{10} \\ v_{10} \end{pmatrix} := ff(L_o, H_o, L_S, H_S, x_B, \rho, t_C, \varepsilon_P, \varepsilon_S, \varepsilon_D, D_{Di}, F_K, F_{D3}, F_{D6}, F_{D9}, \Delta Z_D, L_P, H, Z, L_c, W_c, \varepsilon_c, H_{P10}, p_{10}, V_{10})$$

$$\begin{pmatrix} P_2 \\ P_3 \\ P_5 \\ P_6 \\ P_8 \\ P_9 \\ P_{crack} \end{pmatrix} := P_{10} \quad \begin{pmatrix} v_1 \\ v_3 \\ v_5 \\ v_6 \\ v_8 \\ v_9 \\ v_{crack} \end{pmatrix} := v_{10} \qquad P_{10} = \begin{pmatrix} 61.299 \\ 61.547 \\ 35.265 \\ 4.805 \\ 35.305 \\ 2.191 \\ 20.737 \end{pmatrix} psi \quad v_{10} = \begin{pmatrix} 5.52 \\ 1.463 \\ 2.13 \\ 12.185 \\ 0 \\ 8.689 \\ 40.784 \end{pmatrix} ft\,sec^{-1}$$

Results----------

$h_{P10} = 497\,ft$ $\quad \mu(\rho, t_C) = 1.197\,cP$ $\quad L_{i_{F_K}} = 12\,ft$ $\quad L_{j_{F_K}} = 552\,ft$

$P_2 = 61.3\,psi$ $\quad v_1 = 5.5\,ft\,sec^{-1}$ $\quad A_P \cdot v_1 = 127.2\,gpm$ $\quad D_{Di} = 2.067\,in$

$P_3 = 61.5\,psi$ $\quad F_{D3} \cdot v_3 = 0\,ft\,sec^{-1}$ $\quad F_{D3} \cdot A_P \cdot v_3 = 0\,gpm$

$P_5 = 35.3\,psi$ $\quad v_5 = 2.1\,ft\,sec^{-1}$ $\quad A_{S6}(F_K) \cdot v_5 = 127.4\,gpm$

$P_6 = 4.8\,psi$ $\quad F_{D6} \cdot v_6 = 12.2\,ft\,sec^{-1}$ $\quad F_{D6} \cdot A_f(D_{Di}) \cdot v_6 = 127.4\,gpm$

$P_8 = 35.3\,psi$ $\quad v_8 = 0\,ft\,sec^{-1}$ $\quad A_{S6}(F_K) \cdot v_8 = 0\,gpm$

$P_9 = 2.2\,psi$ $\quad F_{D9} \cdot v_9 = 0\,ft\,sec^{-1}$ $\quad F_{D9} \cdot A_f(D_{Di}) \cdot v_9 = 0\,gpm$

$P_{crack} = 20.7\,psi$ $\quad v_1 \cdot A_P = F_{D3} \cdot A_P \cdot v_3 + A_{S6}(F_K) \cdot v_5 + A_{S6}(F_K) \cdot v_8 = 127.4\,gpm$

(continuity check at break, OK)

$v_{crack} = 40.8\,ft\,sec^{-1}$

$R_e(D_{H_crack}(L_c, W_c), v_{crack}, \rho, \mu(\rho, t_C)) = 7 \times 10^4$

$P_2 - P_5 = 26.034\,psi$

**CH2MHILL Hanford Group, Inc.**

**EVALUATION ANALYSIS**

Calc. No. RPP-LJJ-005
Revision: 0
Page No. 24 of 31

Client: CH2M Hill Hanford Group, Inc.
Subject: Secondary Encasement Pipe Pressure Due to Primary Pipe Break in Waste Tank Cross-Site Transfer Piping System
Location: 200 Area - Hanford Site, Richland, Washington

WO/Job No. _____
Date: 9/12/2001 By: L. J. Julyk
Checked: 9/25/01 By: [signature]
Revised: _____ By: _____

**Case 2 (X01)**

Input==========

**SY-101 New Transfer Pump** (RPP-5667 Rev. 0B)
(Canned Motor Westinghouse Pump Model 2A-513-A1)

$L_o = 6600\,ft$ $\quad H = 7\,ft$ $\quad \varepsilon_P = 2\,mil$

$\boxed{L_S = 13631\,ft}$ $\quad \rho = 1.3\,\frac{kg}{liter}$ $\quad Z = 0\,ft$ $\quad \varepsilon_S = 5\,mil$ $\quad D_{LDo_{F_K}} = 0.31\,in$ $\quad F_K = 1$

$L_P = 51015\,ft$ $\quad F_{D3} = 0$ $\quad \varepsilon_D = 5\,mil$

$\boxed{x_B := 0 \cdot ft + L_o}$ $\quad t_C = 60\ ^{\circ}C$ $\quad D_{Di} = 2.067\,in$ $\quad \Delta Z_D = -1\,ft$ $\quad L_D(D_{Di}, F_K) = 21.086\,ft$ $\quad L_c = 10\,in$

$W_c = 0.1\,in$

$F_{D6} := 0$ $\quad F_{D9} := 1$ $\quad J(F_K, L_o, x_B) = 0$ $\quad N(F_K, L_o, L_S, x_B) = 25$ $\quad \varepsilon_c = 1\,mil$

$I(F_K, L_o, x_B) = 0$ $\quad M(F_K, L_o, L_S, x_B) = 1111$

$$\begin{pmatrix} h_{P01} \\ P_{01} \\ v_{01} \end{pmatrix} := ff(L_o, H_o, L_S, H_S, x_B, \rho, t_C, \varepsilon_P, \varepsilon_S, \varepsilon_D, D_{Di}, F_K, F_{D3}, F_{D6}, F_{D9}, \Delta Z_D, L_P, H, Z, L_c, W_c, \varepsilon_c, H_{P01}, p_{01}, V_{01})$$

$$\begin{pmatrix} P_2 \\ P_3 \\ P_5 \\ P_6 \\ P_8 \\ P_9 \\ P_{crack} \end{pmatrix} := P_{01} \quad \begin{pmatrix} v_1 \\ v_3 \\ v_5 \\ v_6 \\ v_8 \\ v_9 \\ v_{crack} \end{pmatrix} := v_{01} \qquad P_{01} = \begin{pmatrix} 183.934 \\ 184.07 \\ 166.007 \\ 132.978 \\ 165.98 \\ 3.137 \\ 155.962 \end{pmatrix} psi \quad v_{01} = \begin{pmatrix} 4.581 \\ 2.337 \\ 0 \\ 61.409 \\ 1.764 \\ 10.092 \\ 33.865 \end{pmatrix} ft\,sec^{-1}$$

Results----------

$h_{P01} = 512\,ft$ $\quad \mu(\rho, t_C) = 1.197\,cP$ $\quad L_{i_{F_K}} = 12\,ft$ $\quad L_{j_{F_K}} = 552\,ft$

$P_2 = 183.9\,psi$ $\quad v_1 = 4.6\,ft\,sec^{-1}$ $\quad A_P \cdot v_1 = 105.6\,gpm$ $\quad D_{Di} = 2.067\,in$

$P_3 = 184.1\,psi$ $\quad F_{D3} \cdot v_3 = 0\,ft\,sec^{-1}$ $\quad F_{D3} \cdot A_P \cdot v_3 = 0\,gpm$

$P_5 = 166\,psi$ $\quad v_5 = 0\,ft\,sec^{-1}$ $\quad A_{S6}(F_K) \cdot v_5 = 0\,gpm$

$P_6 = 133\,psi$ $\quad F_{D6} \cdot v_6 = 0\,ft\,sec^{-1}$ $\quad F_{D6} \cdot A_f(D_{Di}) \cdot v_6 = 0\,gpm$

$P_8 = 166\,psi$ $\quad v_8 = 1.8\,ft\,sec^{-1}$ $\quad A_{S6}(F_K) \cdot v_8 = 105.6\,gpm$

$P_9 = 3.1\,psi$ $\quad F_{D9} \cdot v_9 = 10.1\,ft\,sec^{-1}$ $\quad F_{D9} \cdot A_f(D_{Di}) \cdot v_9 = 105.6\,gpm$

$P_{crack} = 156\,psi$ $\quad v_1 \cdot A_P = F_{D3} \cdot A_P \cdot v_3 + A_{S6}(F_K) \cdot v_5 + A_{S6}(F_K) \cdot v_8 = 105.6\,gpm$

(continuity check at break, OK)

$v_{crack} = 33.9\,ft\,sec^{-1}$

$R_e(D_{H_crack}(L_c, W_c), v_{crack}, \rho, \mu(\rho, t_C)) = 6 \times 10^4$

$P_2 - P_5 = 17.927\,psi$

**CH2MHILL Hanford Group, Inc.**

**EVALUATION ANALYSIS**

Calc. No. RPP-LJJ-005
Revision: 0
Page No. 25 of 31

Client: CH2M Hill Hanford Group, Inc.
Subject: Secondary Encasement Pipe Pressure Due to Primary Pipe Break in Waste Tank Cross-Site Transfer Piping System
Location: 200 Area - Hanford Site, Richland, Washington

WO/Job No. _____
Date: 9/12/2001 By: L. J. Julyk
Checked: 9/25/01 By: R. J. Rose
Revised: _____ By: _____

**Figure 1c. Case 2: Maximum Pressure in Cross-Site Encasement Pipe Due to Primary Pipe Break (Between Diversion Box and Vent Station) within Encasement Section of Length $L_s$ Starting at $L_o$ Relative to Transfer Pump for Supernate Waste Transfer at Temperature of 60 °C.**

$F_K = 1$

$Z = 0\,ft$ $t_C = 60\,°C$ $\rho = 1.3\,\frac{kg}{liter}$ $\mu(\rho, t_C) = 1.197\,cP$

Low and high point rupture disk: $D_{LDo_{F_K}} = 0.31\,in$ $D_{Di} = 2.067\,in$

$L_c = 10\,in$ $W_c = 0.1\,in$ $\varepsilon_c = 1\,mil$

$H = 6.72\,ft$ $L_o = 6600\,ft$ $L_S = 13631\,ft$ $L_P = 51015\,ft$ $L_{i_{F_K}} = 12\,ft$ $\varepsilon_P = 2\,mil$ $L_D(D_{Di}, F_K) = 21.1\,ft$

$\Delta Z_D = -1\,ft$ $H_o = 11.8\,ft$ $H_S = 85.63\,ft$ $F_{D3} = 0$ $L_{j_{F_K}} = 552\,ft$ $\varepsilon_S = 5\,mil$ $\varepsilon_D = 5\,mil$

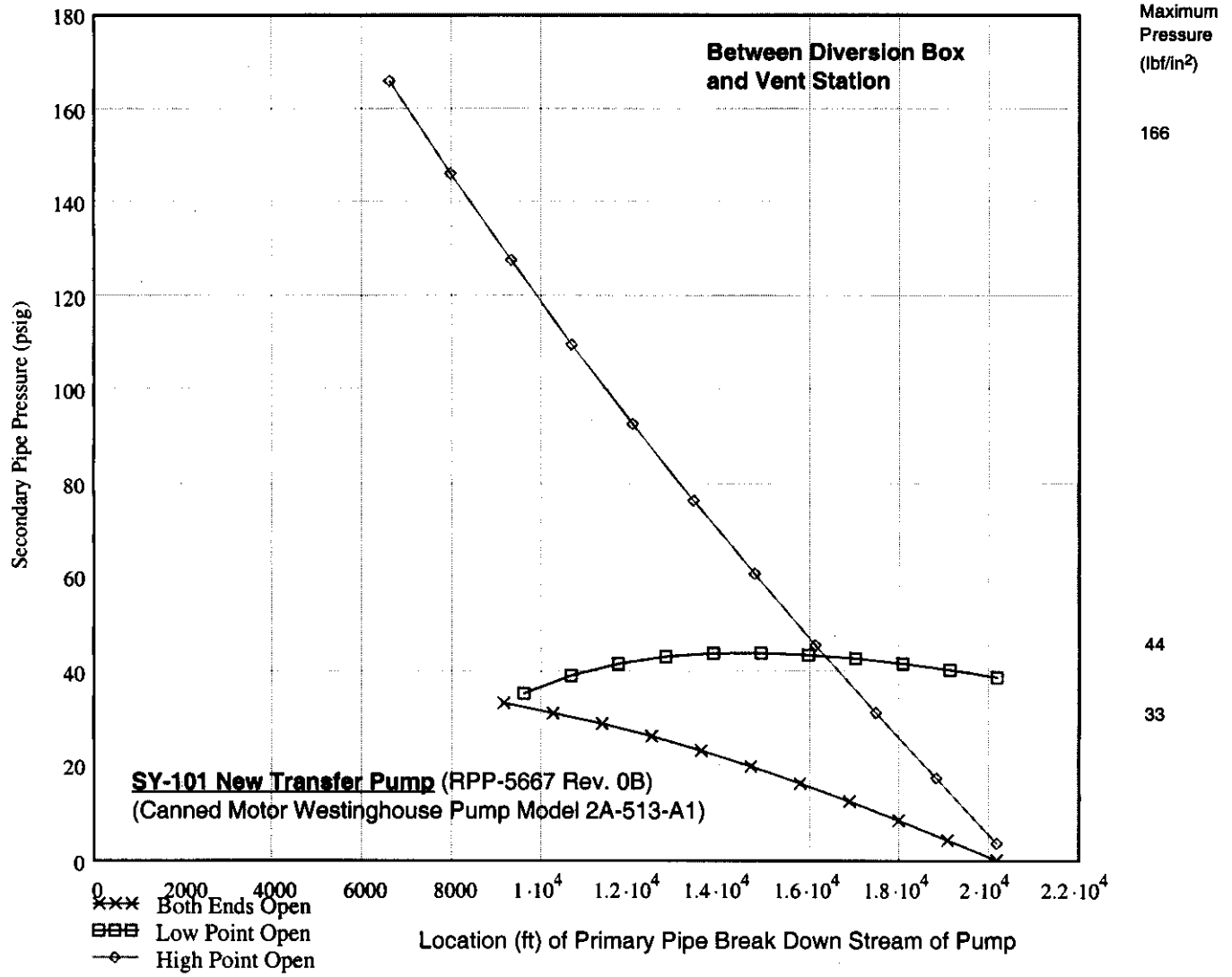

**CH2MHILL Hanford Group, Inc.**

**EVALUATION ANALYSIS**

Calc. No. RPP-LJJ-005
Revision: 0
Page No. 26 of 31

Client: CH2M Hill Hanford Group, Inc.
Subject: Secondary Encasement Pipe Pressure Due to Primary Pipe Break in Waste Tank Cross-Site Transfer Piping System
Location: 200 Area - Hanford Site, Richland, Washington

WO/Job No. _____
Date: 9/12/2001 By: L. J. Julyk
Checked: 9/25/01 By: [illegible]
Revised: _____ By: _____

**Supernate Transfer**

**Case 3 break between Vent Station and 244A Lift Station)**

| | | |
|---|---|---|
| $L_o := L_{SY102_VSout}$ | $L_o = 20362\,ft$ | start distance from pump of secondary encasement section under consideration |
| $H_o := Z_{VSout} - Z_{SY102}$ | $H_o = 85.63\,ft$ | change in elevation of primary pipe from pump to point $L_o$ |
| $L_S := L_{VSout_244Ain}$ | $L_S = 22425\,ft$ | length of secondary encasement section under consideration between drains |
| $H_S := Z_{244Ain} - Z_{SY102}$ | $H_S = 10.88\,ft$ | change in elevation of primary pipe from pump to point $L_o + L_S$ |

Subcase X11 (low and high point drain, $F_{D6} = 1$ and $F_{D9} = 1$)*,
X10 (high point drain, FD6 = 1 and FD9 = 0),
X01 (low point drain, FD6 = 0 and FD9 = 1)*

$D_{Di} = 2.067\,in$

**Initial guesses (X11)** $Q := 138 \cdot gpm$ $\quad V_1 := \frac{Q}{A_P}$ $\quad V_1 = 5.989\,\frac{ft}{sec}$ flow velocities

Both low and high point drains open

$F_K = 1 \quad F_{D3} = 0 \quad F_{D6} := 1 \quad F_{D9} := 1$

$H_{P11} := H'_p(Q)$ pump head $\quad H_{P11} = 489\,ft$

$p_2 := 47 \cdot psi$ primary pipe pressure just up stream of break

$p_3 := 47 \cdot psi$ primary pipe pressure just down stream of break

$p_5 := 29 \cdot psi$ secondary pipe pressure just up stream of break

$p_6 := 1 \cdot psi$ secondary pipe pressure at drain up stream of break

$p_8 := 29 \cdot psi$ secondary pipe pressure just down stream of break

$p_9 := 1 \cdot psi$ secondary pipe pressure at drain down stream of break

$$V_5 := \frac{V_1 \cdot F_{D6} + \Delta V}{3.5}$$

$$V_6 := V_5 \cdot \frac{A_{S6}(F_K)}{A_f(D_{Di})} \qquad \frac{A_{S6}(F_K)}{A_P} = 2.596$$

$$V_8 := \frac{V_1 \cdot F_{D9} + \Delta V}{80} \qquad \frac{A_{S6}(F_K)}{A_f(D_{Di})} = 5.72$$

$$V_9 := V_8 \cdot \frac{A_{S6}(F_K)}{A_f(D_{Di})}$$

$p_c := 19 \cdot psi$ apply conservation of mass (continuity) at break

$$V_3 := V_1 - \frac{A_{S6}(F_K)}{A_P} \cdot (V_5 + V_8) \quad V_3 = 1.27\,\frac{ft}{sec}$$

$$V_c := \frac{A_{S6}(F_K)}{A_{crack}(L_c, W_c)} \cdot (V_5 + V_8) \qquad V_c = 34.9\,\frac{ft}{sec}$$

$$p_{11} := (p_2\ p_3\ p_5\ p_6\ p_8\ p_9\ p_c)^T \qquad V_{11} := (V_1\ V_3\ V_5\ V_6\ V_8\ V_9\ V_c)^T$$

**CH2MHILL Hanford Group, Inc.**

**EVALUATION ANALYSIS**

Calc. No. RPP-LJJ-005
Revision: 0
Page No. 27 of 31

Client: CH2M Hill Hanford Group, Inc.
Subject: Secondary Encasement Pipe Pressure Due to Primary Pipe Break in Waste Tank Cross-Site Transfer Piping System
Location: 200 Area - Hanford Site, Richland, Washington

WO/Job No. _____
Date: 9/12/2001 By: L. J. Julyk
Checked: 9/25/01 By: R. Schlosser
Revised: _____ By: _____

**Initial guesses (X10)** $Q := 78 \cdot gpm$ $V_1 := \frac{Q}{A_P}$ $V_1 = 3.385 \frac{ft}{sec}$ flow velocities

$F_K = 1$ $F_{D3} = 0$ $F_{D6} := 1$ $F_{D9} := 0$

High point drain open

$H_{P10} := H'_p(Q)$ pump head $H_{P10} = 527\,ft$

$p_2 := 45 \cdot psi$ primary pipe pressure just up stream of break

$p_3 := 45 \cdot psi$ primary pipe pressure just down stream of break

$p_5 := 35 \cdot psi$ secondary pipe pressure just up stream of break

$p_6 := 1.5 \cdot psi$ secondary pipe pressure at drain up stream of break

$p_8 := 35 \cdot psi$ secondary pipe pressure just down stream of break

$p_9 := 55 \cdot psi$ secondary pipe pressure at drain down stream of break

$V_5 := \frac{V_1 \cdot F_{D6} + \Delta V}{3}$

$V_6 := V_5 \cdot \frac{A_{S6}(F_K)}{A_f(D_{Di})}$ $\frac{A_{S6}(F_K)}{A_P} = 2.596$

$V_8 := \frac{V_1 \cdot F_{D9} + \Delta V}{3.8}$ $\frac{A_{S6}(F_K)}{A_f(D_{Di})} = 5.72$

$V_9 := V_8 \cdot \frac{A_{S6}(F_K)}{A_f(D_{Di})}$

$p_c := 30 \cdot psi$

apply conservation of mass (continuity) at break

$V_3 := V_1 - \frac{A_{S6}(F_K)}{A_P} \cdot (V_5 + V_8)$ $V_3 = 0.3 \frac{ft}{sec}$

$V_c := \frac{A_{S6}(F_K)}{A_{crack}(L_c, W_c)} \cdot (V_5 + V_8)$ $V_c = 22.8 \frac{ft}{sec}$

$p_{10} := (p_2\ p_3\ p_5\ p_6\ p_8\ p_9\ p_c)^T$ $V_{10} := (V_1\ V_3\ V_5\ V_6\ V_8\ V_9\ V_c)^T$

0 1 2 3 4 5 6 0 1 2 3 4 5 6

**Initial guesses (X01)** $Q := 75 \cdot gpm$ $V_1 := \frac{Q}{A_P}$ $V_1 = 3.255 \frac{ft}{sec}$ flow velocities

$F_K = 1$ $F_{D3} = 0$ $F_{D6} := 0$ $F_{D9} := 1$

High point drain open

$H_{P01} := H'_p(Q)$ pump head $H_{P01} = 528\,ft$

$p_2 := 58 \cdot psi$ primary pipe pressure just up stream of break

$p_3 := 58 \cdot psi$ primary pipe pressure just down stream of break

$p_5 := 50 \cdot psi$ secondary pipe pressure just up stream of break

$p_6 := 32 \cdot psi$ secondary pipe pressure at drain up stream of break

$p_8 := 50 \cdot psi$ secondary pipe pressure just down stream of break

$p_9 := 1 \cdot psi$ secondary pipe pressure at drain down stream of break

$V_5 := \frac{V_1 \cdot F_{D6} + \Delta V}{8}$

$V_6 := V_5 \cdot \frac{A_{S6}(F_K)}{A_f(D_{Di})}$ $\frac{A_{S6}(F_K)}{A_P} = 2.596$

$V_8 := \frac{V_1 \cdot F_{D9} + \Delta V}{3}$ $\frac{A_{S6}(F_K)}{A_f(D_{Di})} = 5.72$

$V_9 := V_8 \cdot \frac{A_{S6}(F_K)}{A_f(D_{Di})}$

$p_c := 44 \cdot psi$

apply conservation of mass (continuity) at break

$V_3 := V_1 - \frac{A_{S6}(F_K)}{A_P} \cdot (V_5 + V_8)$ $V_3 = 0.32 \frac{ft}{sec}$

$V_c := \frac{A_{S6}(F_K)}{A_{crack}(L_c, W_c)} \cdot (V_5 + V_8)$ $V_c = 21.7 \frac{ft}{sec}$

$p_{01} := (p_2\ p_3\ p_5\ p_6\ p_8\ p_9\ p_c)^T$ $V_{01} := (V_1\ V_3\ V_5\ V_6\ V_8\ V_9\ V_c)^T$

0 1 2 3 4 5 6 0 1 2 3 4 5 6

**CH2MHILL Hanford Group, Inc.**

**EVALUATION ANALYSIS**

Calc. No. RPP-LJJ-005
Revision: 0
Page No. 28 of 31

Client: CH2M Hill Hanford Group, Inc.
Subject: Secondary Encasement Pipe Pressure Due to Primary Pipe Break in Waste Tank Cross-Site Transfer Piping System
Location: 200 Area - Hanford Site, Richland, Washington

WO/Job No. _____
Date: 9/12/2001 By: L. J. Julyk
Checked: 9/25/01 By: R. H. Close
Revised: _____ By: _____

**Case 3 (X11)**

**SY-101 New Transfer Pump** (RPP-5667 Rev. 0B)
(Canned Motor Westinghouse Pump Model 2A-513-A1)

Input==========

$L_o = 20362\,ft$ $\quad H = 7\,ft$ $\quad \varepsilon_P = 2\,mil$

$L_S = 22425\,ft$ $\quad \rho = 1.3\,\frac{kg}{liter}$ $\quad Z = 0\,ft$ $\quad \varepsilon_S = 5\,mil$ $\quad D_{LDo_{F_K}} = 0.31\,in$ $\quad F_K = 1$

$L_P = 51015\,ft$ $\quad F_{D3} = 0$ $\quad \varepsilon_D = 5\,mil$ $\quad L_c = 10\,in$

$x_B := L_S - 9300 \cdot ft + L_o$ $\quad D_{Di} = 2.067\,in$ $\quad \Delta Z_D = -1\,ft$ $\quad L_D(D_{Di}, F_K) = 21.086\,ft$ $\quad W_c = 0.1\,in$

$t_C = 60\,^{\circ}C$ $\quad F_{D6} := 1$ $\quad F_{D9} := 1$ $\quad J(F_K, L_o, x_B) = 24$ $\quad N(F_K, L_o, L_S, x_B) = 17$ $\quad \varepsilon_c = 1\,mil$

$I(F_K, L_o, x_B) = 1070$ $\quad M(F_K, L_o, L_S, x_B) = 758$

$$\begin{pmatrix} h_{P11} \\ P_{11} \\ v_{11} \end{pmatrix} := ff(L_o, H_o, L_S, H_S, x_B, \rho, t_C, \varepsilon_P, \varepsilon_S, \varepsilon_D, D_{Di}, F_K, F_{D3}, F_{D6}, F_{D9}, \Delta Z_D, L_P, H, Z, L_c, W_c, \varepsilon_c, H_{P11}, p_{11}, V_{11})$$

$$\begin{pmatrix} P_2 \\ P_3 \\ P_5 \\ P_6 \\ P_8 \\ P_9 \\ P_{crack} \end{pmatrix} := P_{11} \quad \begin{pmatrix} v_1 \\ v_3 \\ v_5 \\ v_6 \\ v_8 \\ v_9 \\ v_{crack} \end{pmatrix} := v_{11} \qquad P_{11} = \begin{pmatrix} 32.535 \\ 32.587 \\ 24.093 \\ -0.564 \\ 24.081 \\ 1.219 \\ 19.366 \end{pmatrix} psi \quad v_{11} = \begin{pmatrix} 3.126 \\ 1.942 \\ -1.092 \times 10^{-4} \\ -3.156 \times 10^{-7} \\ 1.217 \\ 6.963 \\ 23.232 \end{pmatrix} ft\,sec^{-1}$$

Results----------

$h_{P11} = 530\,ft$ $\quad \mu(\rho, t_C) = 1.197\,cP$ $\quad L_{i_{F_K}} = 12\,ft$ $\quad L_{j_{F_K}} = 552\,ft$

$P_2 = 32.5\,psi$ $\quad v_1 = 3.1\,ft\,sec^{-1}$ $\quad A_P \cdot v_1 = 72\,gpm$ $\quad D_{Di} = 2.067\,in$

$P_3 = 32.6\,psi$ $\quad F_{D3} \cdot v_3 = 0\,ft\,sec^{-1}$ $\quad F_{D3} \cdot A_P \cdot v_3 = 0\,gpm$

$P_5 = 24.1\,psi$ $\quad v_5 = -1.1 \times 10^{-4}\,ft\,sec^{-1}$ $\quad A_{S6}(F_K) \cdot v_5 = -6.5 \times 10^{-3}\,gpm$

$P_6 = -0.6\,psi$ $\quad F_{D6} \cdot v_6 = -3.2 \times 10^{-7}\,ft\,sec^{-1}$ $\quad F_{D6} \cdot A_f(D_{Di}) \cdot v_6 = -3.3 \times 10^{-6}\,gpm$

$P_8 = 24.1\,psi$ $\quad v_8 = 1.2\,ft\,sec^{-1}$ $\quad A_{S6}(F_K) \cdot v_8 = 72.8\,gpm$

$P_9 = 1.2\,psi$ $\quad F_{D9} \cdot v_9 = 7\,ft\,sec^{-1}$ $\quad F_{D9} \cdot A_f(D_{Di}) \cdot v_9 = 72.8\,gpm$

$P_{crack} = 19.4\,psi$ $\quad v_1 \cdot A_P = F_{D3} \cdot A_P \cdot v_3 + A_{S6}(F_K) \cdot v_5 + A_{S6}(F_K) \cdot v_8 = 72.8\,gpm$

(continuity check at break, OK)

$v_{crack} = 23.2\,ft\,sec^{-1}$

$R_e(D_{H_crack}(L_c, W_c), v_{crack}, \rho, \mu(\rho, t_C)) = 4 \times 10^4$

$P_2 - P_5 = 8.441\,psi$

**CH2MHILL Hanford Group, Inc.**

**EVALUATION ANALYSIS**

Calc. No. RPP-LJJ-005
Revision: 0
Page No. 29 of 31

Client: CH2M Hill Hanford Group, Inc.
Subject: Secondary Encasement Pipe Pressure Due to Primary Pipe Break in Waste Tank Cross-Site Transfer Piping System
Location: 200 Area - Hanford Site, Richland, Washington

WO/Job No. _____
Date: 9/12/2001 By: L. J. Julyk
Checked: 9/25/01 By: R. R. Salbase
Revised: _____ By: _____

**Case 3 (X10)**

Input==========

**SY-101 New Transfer Pump** (RPP-5667 Rev. 0B)
(Canned Motor Westinghouse Pump Model 2A-513-A1)

$L_o = 20362\,ft$ $\quad H = 7\,ft$ $\quad \varepsilon_P = 2\,mil$

$\boxed{L_S = 22425\,ft}$ $\quad \rho = 1.3\,\frac{kg}{liter}$ $\quad Z = 0\,ft$ $\quad \varepsilon_S = 5\,mil$ $\quad D_{LDo_{F_K}} = 0.31\,in$ $\quad F_K = 1$

$L_P = 51015\,ft$ $\quad F_{D3} = 0$ $\quad \varepsilon_D = 5\,mil$ $\quad L_c = 10\,in$

$\boxed{x_B := L_S - 5800 \cdot ft + L_o}$ $\quad D_{Di} = 2.067\,in$ $\quad \Delta Z_D = -1\,ft$ $\quad L_D(D_{Di}, F_K) = 21.086\,ft$ $\quad W_c = 0.1\,in$

$t_C = 60\,^{\circ}C$ $\quad F_{D6} := 1$ $\quad F_{D9} := 0$ $\quad J(F_K, L_o, x_B) = 30$ $\quad N(F_K, L_o, L_S, x_B) = 11$ $\quad \varepsilon_c = 1\,mil$

$I(F_K, L_o, x_B) = 1.355 \times 10^3$ $\quad L_o, L_S, x_B) = 472$

$$\begin{pmatrix} h_{P10} \\ P_{10} \\ v_{10} \end{pmatrix} := ff(L_o, H_o, L_S, H_S, x_B, \rho, t_C, \varepsilon_P, \varepsilon_S, \varepsilon_D, D_{Di}, F_K, F_{D3}, F_{D6}, F_{D9}, \Delta Z_D, L_P, H, Z, L_c, W_c, \varepsilon_c, H_{P10}, p_{10}, V_{10})$$

$$\begin{pmatrix} P_2 \\ P_3 \\ P_5 \\ P_6 \\ P_8 \\ P_9 \\ P_{crack} \end{pmatrix} := P_{10} \quad \begin{pmatrix} v_1 \\ v_3 \\ v_5 \\ v_6 \\ v_8 \\ v_9 \\ v_{crack} \end{pmatrix} := v_{10} \qquad P_{10} = \begin{pmatrix} 88.481 \\ 88.456 \\ 82.508 \\ 0.69 \\ 82.517 \\ 74.808 \\ 79.177 \end{pmatrix} psi \quad v_{10} = \begin{pmatrix} 2.641 \\ 3.128 \\ 1.017 \\ 5.819 \\ 0 \\ 46.09 \\ 19.527 \end{pmatrix} ft\,sec^{-1}$$

Results----------

$h_{P10} = 534\,ft$ $\quad \mu(\rho, t_C) = 1.197\,cP$ $\quad L_{i_{F_K}} = 12\,ft$ $\quad L_{j_{F_K}} = 552\,ft$

$P_2 = 88.5\,psi$ $\quad v_1 = 2.6\,ft\,sec^{-1}$ $\quad A_P \cdot v_1 = 60.9\,gpm$ $\quad D_{Di} = 2.067\,in$

$P_3 = 88.5\,psi$ $\quad F_{D3} \cdot v_3 = 0\,ft\,sec^{-1}$ $\quad F_{D3} \cdot A_P \cdot v_3 = 0\,gpm$

$P_5 = 82.5\,psi$ $\quad v_5 = 1\,ft\,sec^{-1}$ $\quad A_{S6}(F_K) \cdot v_5 = 60.9\,gpm$

$P_6 = 0.7\,psi$ $\quad F_{D6} \cdot v_6 = 5.8\,ft\,sec^{-1}$ $\quad F_{D6} \cdot A_f(D_{Di}) \cdot v_6 = 60.9\,gpm$

$P_8 = 82.5\,psi$ $\quad v_8 = 0\,ft\,sec^{-1}$ $\quad A_{S6}(F_K) \cdot v_8 = 0\,gpm$

$P_9 = 74.8\,psi$ $\quad F_{D9} \cdot v_9 = 0\,ft\,sec^{-1}$ $\quad F_{D9} \cdot A_f(D_{Di}) \cdot v_9 = 0\,gpm$

$P_{crack} = 79.2\,psi$ $\quad v_1 \cdot A_P = F_{D3} \cdot A_P \cdot v_3 + A_{S6}(F_K) \cdot v_5 + A_{S6}(F_K) \cdot v_8 = 60.9\,gpm$

(continuity check at break, OK)

$v_{crack} = 19.5\,ft\,sec^{-1}$

$R_e(D_{H_crack}(L_c, W_c), v_{crack}, \rho, \mu(\rho, t_C)) = 3 \times 10^4$

$P_2 - P_5 = 5.973\,psi$

**CH2MHILL Hanford Group, Inc.**

**EVALUATION ANALYSIS**

Calc. No. RPP-LJJ-005
Revision: 0
Page No. 30 of 31

Client: CH2M Hill Hanford Group, Inc.
Subject: Secondary Encasement Pipe Pressure Due to Primary Pipe Break in Waste Tank Cross-Site Transfer Piping System
Location: 200 Area - Hanford Site, Richland, Washington

WO/Job No. _____
Date: 9/12/2001 By: L. J. Julyk
Checked: 9/25/01 By: [illegible]
Revised: _____ By: _____

**Case 3 (X01)**

Input==========

**SY-101 New Transfer Pump** (RPP-5667 Rev. 0B)
(Canned Motor Westinghouse Pump Model 2A-513-A1)

$L_o = 20362\,ft$ $\quad H = 7\,ft$ $\quad \varepsilon_P = 2\,mil$

$\boxed{L_S = 22425\,ft}$ $\quad \rho = 1.3\,\frac{kg}{liter}$ $\quad Z = 0\,ft$ $\quad \varepsilon_S = 5\,mil$ $\quad D_{LDo_{F_K}} = 0.31\,in$ $\quad F_K = 1$

$L_P = 51015\,ft$ $\quad F_{D3} = 0$ $\quad \varepsilon_D = 5\,mil$ $\quad L_c = 10\,in$

$\boxed{x_B := L_S - 9500 \cdot ft + L_c}$ $\quad D_{Di} = 2.067\,in$ $\quad \Delta Z_D = -1\,ft$ $\quad L_D(D_{Di}, F_K) = 21.086\,ft$ $\quad W_c = 0.1\,in$

$t_C = 60\,°C$ $\quad F_{D6} := 0$ $\quad F_{D9} := 1$ $\quad J(F_K, L_o, x_B) = 23$ $\quad N(F_K, L_o, L_S, x_B) = 17$ $\quad \varepsilon_c = 1\,mil$

$I(F_K, L_o, x_B) = 1.054 \times 10^3$ $\quad L_o, L_S, x_B) = 775$

$$\begin{pmatrix} h_{P01} \\ P_{01} \\ v_{01} \end{pmatrix} := ff(L_o, H_o, L_S, H_S, x_B, \rho, t_C, \varepsilon_P, \varepsilon_S, \varepsilon_D, D_{Di}, F_K, F_{D3}, F_{D6}, F_{D9}, \Delta Z_D, L_P, H, Z, L_c, W_c, \varepsilon_c, H_{P01}, p_{01}, V_{01})$$

$$\begin{pmatrix} P_2 \\ P_3 \\ P_5 \\ P_6 \\ P_8 \\ P_9 \\ P_{crack} \end{pmatrix} := P_{01} \quad \begin{pmatrix} v_1 \\ v_3 \\ v_5 \\ v_6 \\ v_8 \\ v_9 \\ v_{crack} \end{pmatrix} := v_{01} \qquad P_{01} = \begin{pmatrix} 32.387 \\ 32.44 \\ 23.977 \\ -0.352 \\ 23.964 \\ 1.196 \\ 19.266 \end{pmatrix} psi \quad v_{01} = \begin{pmatrix} 3.135 \\ 1.935 \\ -1.621 \times 10^{-5} \\ 2.327 \\ 1.209 \\ 6.917 \\ 23.19 \end{pmatrix} ft\,sec^{-1}$$

Results----------

$h_{P01} = 529\,ft$ $\quad \mu(\rho, t_C) = 1.197\,cP$ $\quad L_{i_{F_K}} = 12\,ft$ $\quad L_{j_{F_K}} = 552\,ft$

$P_2 = 32.4\,psi$ $\quad v_1 = 3.1\,ft\,sec^{-1}$ $\quad A_P \cdot v_1 = 72.2\,gpm$ $\quad D_{Di} = 2.067\,in$

$P_3 = 32.4\,psi$ $\quad F_{D3} \cdot v_3 = 0\,ft\,sec^{-1}$ $\quad F_{D3} \cdot A_P \cdot v_3 = 0\,gpm$

$P_5 = 24\,psi$ $\quad v_5 = -1.6 \times 10^{-5}\,ft\,sec^{-1}$ $\quad A_{S6}(F_K) \cdot v_5 = -9.7 \times 10^{-4}\,gpm$

$P_6 = -0.4\,psi$ $\quad F_{D6} \cdot v_6 = 0\,ft\,sec^{-1}$ $\quad F_{D6} \cdot A_f(D_{Di}) \cdot v_6 = 0\,gpm$

$P_8 = 24\,psi$ $\quad v_8 = 1.2\,ft\,sec^{-1}$ $\quad A_{S6}(F_K) \cdot v_8 = 72.3\,gpm$

$P_9 = 1.2\,psi$ $\quad F_{D9} \cdot v_9 = 6.9\,ft\,sec^{-1}$ $\quad F_{D9} \cdot A_f(D_{Di}) \cdot v_9 = 72.3\,gpm$

$P_{crack} = 19.3\,psi$ $\quad v_1 \cdot A_P = F_{D3} \cdot A_P \cdot v_3 + A_{S6}(F_K) \cdot v_5 + A_{S6}(F_K) \cdot v_8 = 72.3\,gpm$

(continuity check at break, OK)

$v_{crack} = 23.2\,ft\,sec^{-1}$

$R_e(D_{H_crack}(L_c, W_c), v_{crack}, \rho, \mu(\rho, t_C)) = 4 \times 10^4$

$P_2 - P_5 = 8.41\,psi$

**CH2MHILL Hanford Group, Inc.**

**EVALUATION ANALYSIS**

Calc. No. RPP-LJJ-005
Revision: 0
Page No. 31 of 31

Client: CH2M Hill Hanford Group, Inc.
Subject: Secondary Encasement Pipe Pressure Due to Primary Pipe Break in Waste Tank Cross-Site Transfer Piping System
Location: 200 Area - Hanford Site, Richland, Washington

WO/Job No. _____
Date: 9/12/2001 By: L. J. Julyk
Checked: 9/25/01 By: [illegible]
Revised: _____ By: _____

**Figure 1d. Case 3: Maximum Pressure in Cross-Site Encasement Pipe Due to Primary Pipe Break (Between Vent Station and 244A Lift Station) within Encasement Section of Length $L_s$ Starting at $L_o$ Relative to Transfer Pump for Supernate Waste Transfer at Temperature of 60 °C.**

$F_K = 1$ High point rupture disk $L_c = 10\,in$

$Z = 0\,ft$ $t_C = 60\ ^{\circ}C$ $\rho = 1.3\,\frac{kg}{liter}$ $\mu(\rho, t_C) = 1.197\,cP$ $D_{LDo_{F_K}} = 0.31\,in$ $D_{Di} = 2.067\,in$ $W_c = 0.1\,in$

$H = 6.72\,ft$ $L_o = 20362\,ft$ $L_S = 22425\,ft$ $L_P = 51015\,ft$ $L_{j_{F_K}} = 12\,ft$ $\varepsilon_P = 2\,mil$ $L_D(D_{Di}, F_K) = 21.1\,ft$ $\varepsilon_c = 1\,mil$

$\Delta Z_D = -1\,ft$ $H_o = 85.63\,ft$ $H_S = 10.88\,ft$ $F_{D3} = 0$ $L_{j_{F_K}} = 552\,ft$ $\varepsilon_S = 5\,mil$ $\varepsilon_D = 5\,mil$

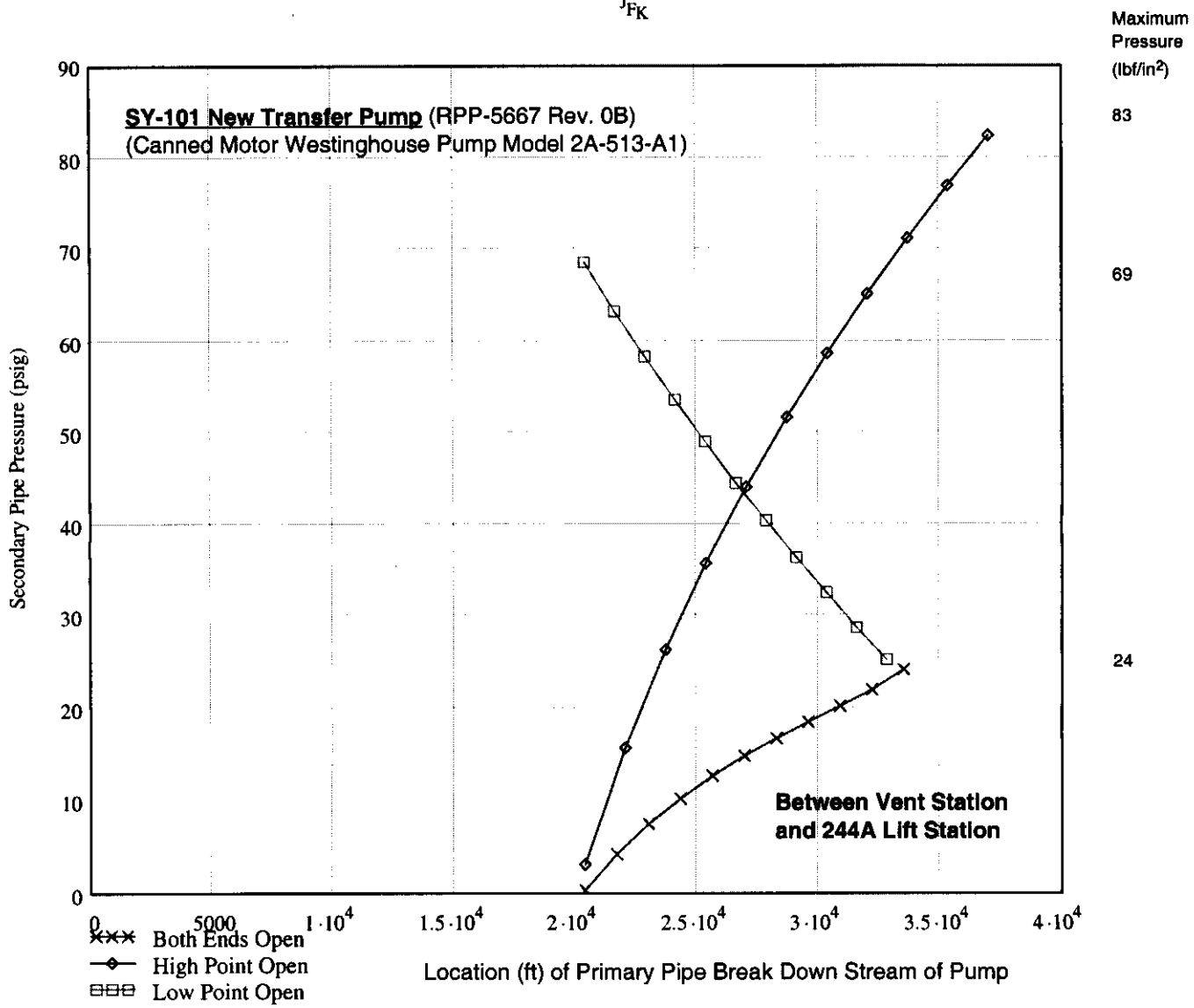

This page intentionally left blank

# APPENDIX B1

# RCSTS ENCASEMENT PIPE MAXIMUM PRESSURE ANALYSIS

# OPEN TRANSFER ROUTE

This page intentionally left blank

**CH2MHILL Hanford Group, Inc.**

**EVALUATION ANALYSIS**

Calc. No. RPP-LJJ-005
Revision: 0
Page No. 1 of 31

Client: CH2M Hill Hanford Group, Inc.
Subject: Secondary Encasement Pipe Pressure Due to Primary Pipe Break in Waste Tank Cross-Site Transfer Piping System
Location: 200 Area - Hanford Site, Richland, Washington

WO/Job No. _____
Date: 9/12/2001 By: L. J. Julyk
Checked: 9/25/01 By: R. McCloose
Revised: _____ By: _____

Reference:C:\WINDOWS\Desktop\FY2001\Waste Transfer System\Encasement Pressure Issue\Cross-Site Encasement Calcs\pipebreak.r

**Input Parameter Data**

**RCSTS Elevation and Equivalent Pipe Length Parameters**

RCSTS Elevations

$Z_{SY102} := 668.62 \cdot ft$ elevation at SY102 Transfer Pump Pit

$Z_{SYAin} := 671.2 \cdot ft$ elevation at SY-A-in Valve Pit

$Z_{SYBout} := 670.2 \cdot ft$ elevation at SY-B-out Valve Pit

$Z_{DB1in} := 680.29 \cdot ft$ elevation at Diversion Box 6241-A-in

$Z_{BP} := 684.92 \cdot ft$ elevation at Booster Pump

$Z_{DB1out} := 680.42 \cdot ft$ elevation at Diversion Box 6241-A-out

$Z_{VSin} := 754.25 \cdot ft$ elevation at Vent Station 6241-V-in

$Z_{VSout} := 754.25 \cdot ft$ elevation at Vent Station 6241-V-out

$Z_{244Ain} := 679.5 \cdot ft$ elevation at 244 Lift Station-in

$Z_{244Aout} := 681.36 \cdot ft$ elevation at 244 Lift Station-out

$Z_{AP107} := 675.34 \cdot ft$ elevation at Tank AP107

Equivalent pipe length between points

$L_{SY102_SYAin} := 339 \cdot ft$

$L_{SYAin_SYBout} := 714 \cdot ft$

$L_{SYBout_DB1in} := 4921 \cdot ft$

$L_{DB1in_BP} := 340 \cdot ft$

$L_{BP_DB1out} := 286 \cdot ft$

$L_{DB1out_VSin} := 13631 \cdot ft$

$L_{VSin_VSout} := 131 \cdot ft$

$L_{VSout_244Ain} := 22425 \cdot ft$

$L_{244Ain_244Aout} := 301 \cdot ft$

$L_{244Aout_AP107} := 7927 \cdot ft$

$L_{SY102_DB1out} := L_{SY102_SYAin} + L_{SYAin_SYBout} + L_{SYBout_DB1in} + L_{DB1in_BP} + L_{BP_DB1out}$ $L_{SY102_DB1out} = 6600\,ft$

$L_{SY102_VSout} := L_{SY102_DB1out} + L_{DB1out_VSin} + L_{VSin_VSout}$ $L_{SY102_VSout} = 20362\,ft$

$L_{SYAin_DB1in} := L_{SYAin_SYBout} + L_{SYBout_DB1in}$ $L_{SYAin_DB1in} = 5635\,ft$

$$Z_{SY_tank_bottom} := \left(616.5 + \frac{3}{8} \cdot \frac{1}{12} + \frac{8}{12} + \frac{0.5}{12}\right) \cdot ft \qquad Z_{SY_full} := Z_{SY_tank_bottom} + 422 \cdot in$$

(H-2-37772)

$\Delta H_{pump} := Z_{SY102} - Z_{SY_full}$

$\Delta H_{pump} = 16.214\,ft$

**CH2MHILL Hanford Group, Inc.**

**EVALUATION ANALYSIS**

Calc. No. RPP-LJJ-005
Revision: 0
Page No. 2 of 31

Client: CH2M Hill Hanford Group, Inc.
Subject: Secondary Encasement Pipe Pressure Due to Primary Pipe Break in Waste Tank Cross-Site Transfer Piping System
Location: 200 Area - Hanford Site, Richland, Washington

WO/Job No. _____
Date: 9/12/2001 By: L. J. Julyk
Checked: 9/25/01 By: [illegible]
Revised: _____ By: _____

**RCSTS Cases**

Case 0 break between SY-102 Pump Pit and SY-A Valve Pit (transfer pump)

$L_o := 0 \cdot ft$ $\quad L_o = 0\,ft$

$H_o := 0 \cdot ft$ $\quad H_o = 0\,ft$

$L_S := L_{SY102_SYAin}$ $\quad L_S = 339\,ft$

$H_S := Z_{SYAin} - Z_{SY102}$ $\quad H_S = 2.58\,ft$

Subcase X11 (low and high point drain, $F_{D6} = 1$ and $F_{D9} = 1$)*,
X10 (low point drain, FD6 = 1 and FD9 = 0) 1 1/2-in.drain,
X01 (high point drain, FD6 = 0 and FD9 = 1)*

Case 1 break between SY-A Valve Pit and Diversion Box (transfer pump)

$L_o := L_{SY102_SYAin}$ $\quad L_o = 339\,ft$

$H_o := Z_{SYAin} - Z_{SY102}$ $\quad H_o = 2.58\,ft$

$L_S := L_{SYAin_DB1in}$ $\quad L_S = 5635\,ft$

$H_S := Z_{DB1in} - Z_{SY102}$ $\quad H_S = 11.67\,ft$

Subcase X11 (low and high point drain, $F_{D6} = 1$ and $F_{D9} = 1$)*,
X10 (low point drain, FD6 = 1 and FD9 = 0)*,
X01 (high point drain, FD6 = 0 and FD9 = 1)

Case 2 break between Diversion Box and Vent Station (transfer + booster pump)

$L_o := L_{SY102_DB1out}$ $\quad L_o = 6600\,ft$

$H_o := Z_{DB1out} - Z_{SY102}$ $\quad H_o = 11.8\,ft$

$L_S := L_{DB1out_VSin}$ $\quad L_S = 13631\,ft$

$H_S := Z_{VSin} - Z_{SY102}$ $\quad H_S = 85.63\,ft$

Subcase X11 (low and high point drain, $F_{D6} = 1$ and $F_{D9} = 1$),
X10 (low point drain, FD6 = 1 and FD9 = 0),
X01 (high point drain, FD6 = 0 and FD9 = 1)

Case 3 break between Vent Station and 244A Lift Station (transfer + booster pump)

$L_o := L_{SY102_VSout}$ $\quad L_o = 20362\,ft$

$H_o := Z_{VSout} - Z_{SY102}$ $\quad H_o = 85.63\,ft$

$L_S := L_{VSout_244Ain}$ $\quad L_S = 22425\,ft$

$H_S := Z_{244Ain} - Z_{SY102}$ $\quad H_S = 10.88\,ft$

Subcase X11 (low and high point drain, $F_{D6} = 1$ and $F_{D9} = 1$)*,
X10 (high point drain, FD6 = 1 and FD9 = 0),
X01 (low point drain, FD6 = 0 and FD9 = 1)*

* would require additional drain/relief valve at other end of line segment

X = 1 for FD3 = 1 (primary pipe downstream flow open)
0 for FD3 = 0 (primary pipe downstream flow blocked)

$F_K$ selects primary pipe internal support parameters in annulus
= 0 for existing in-Farm piping (no leak detection cable, no anchors)
= 1 for W058 and W314 extension of W058 (with leak detection cable 2-in. thk anchor, no radius in anchor slots)
= 2 for W058 and W314 extension of W058 (leak detection cable 2-in. thk anchor, with radius in anchor slots)
= 3 for new in-Farm W314 piping (1-in. thk anchor, with radius in anchor slots)

$D_{Di}$ internal pipe diameter of drain
= 1.5 or 2 inches for existing in-Farm piping (no rupture disks)
= 2 inches for W058 and W314 extension of W058 (with rupture disks)
= 2 inches for new in-Farm W314 piping (no rupture disks)

$F_{D3}$ $F_{D6}$ $F_{D9}$ switch to block (= 0) or open (= 1) flow downstream of break and drain location 6 or 9, respectively

$L_P$ total equivalent length of primary pipe from pump to discharge exit

$L_P := L_{SY102_VSout} + L_{VSout_244Ain} + L_{244Ain_244Aout} + L_{244Aout_AP107}$ $L_P = 51015\,ft$ $L_P = 9.662\,mi$

$H := Z_{AP107} - Z_{SY102}$ change in elevation of primary pipe from pump to point just before vertical increase in elevation at end of primary pipe at discharge to tank (see Figure 1) $H = 7\,ft$

$\Delta Z_D := -1 \cdot ft$ approximate change in elevation at drain

$Z := 0 \cdot ft$ vertical increase in elevation at end of primary pipe at discharge to tank at WTP (N/A)

Supernate Transfer
Case 2 break between Diversion Box and Vent Station

$L_o := L_{SY102_DB1out}$ $L_o = 6600\,ft$ start distance from pump of secondary encasement section under consideration

$H_o := Z_{DB1out} - Z_{SY102}$ $H_o = 11.8\,ft$ change in elevation of primary pipe from pump to point $L_o$ $H_o = 11.8\,ft$

$L_S := L_{DB1out_VSin}$ $L_S = 13631\,ft$ length of secondary encasement section under consideration between drains

$H_S := Z_{VSin} - Z_{SY102}$ $H_S = 85.63\,ft$ change in elevation of primary pipe from pump to point $L_o + L_S$ $H_S = 85.63\,ft$

$x_B := 1000 \cdot ft + L_o$ distance of break in primary pipe from transfer pump

$H_B(L_o, H_o, L_S, H_S, x_B) = 17.22\,ft$ elevation at assumed break location $x_B$ relative to transfer pump elevation

$t_C$ temperature of waste (°C)

$\rho$ bulk density of waste (kg/L)

Pipe roughness

$\varepsilon_P := 2 \cdot mil$ stainless steel primary pipe

$\varepsilon_S := 5 \cdot mil$ carbon steel secondary (encasement) pipe

$\varepsilon_D := 5 \cdot mil$ carbon steel drain pipe

**CH2MHILL Hanford Group, Inc.**

**EVALUATION ANALYSIS**

Calc. No. RPP-LJJ-005
Revision: 0
Page No. 4 of 31

Client: CH2M Hill Hanford Group, Inc.
Subject: Secondary Encasement Pipe Pressure Due to Primary Pipe Break in Waste Tank Cross-Site Transfer Piping System
Location: 200 Area - Hanford Site, Richland, Washington

WO/Job No. _____
Date: 9/12/2001 By: L. J. Julyk
Checked: 9/25/01 By: [illegible]
Revised: _____ By: _____

Assumed Crack Size Parameters

$D_{LDo} = \begin{pmatrix} 0 \\ 0.31 \\ 0.31 \\ 0 \end{pmatrix} in$ Existing, W058, W058, W314 — diameter of leak detection cable

$\rho := 1.3 \cdot \frac{kg}{liter}$ $t_C := 60$

$T_F(t_C) = 140$

viscosity $\mu(\rho, t_C) = 1.197\,cP$

$L_c := 10 \cdot in$ crack length

$W_c := 0.1 \cdot in$ crack opening width

$A_{crack}(L_c, W_c) = 1\,in^2$ $\beta_{c1}(L_c, W_c) = 0.368$ $\beta_{c2}(L_c, W_c, D_{LDo}) = \begin{pmatrix} 0.22781 \\ 0.22826 \\ 0.22826 \\ 0.22781 \end{pmatrix}$

$P_{crack}(L_c, W_c) = 20.2\,in$

$D_{H_crack}(L_c, W_c) = 0.198\,in$ effective hydraulic diameter $\alpha_c(L_c, W_c) = 1.091$ $L/D_{oH}$ ratio for crack

$\varepsilon_c := 1 \cdot mil$ primary pipe through crack roughness

$V_c := 10 \cdot \frac{ft}{sec}$ $R_e(D_{H_crack}(L_c, W_c), V_c, \rho, \mu(\rho, t_C)) = 2 \times 10^4$ Reynolds number for flow through crack

thick-edged orifice with $\alpha = L/D_{oH} > 0.015$ $\alpha_c(L_c, W_c) = 1.091 > 0.15$ => thick-edged orifice

Lyons 1982, Eqn 4, pg. 158

$K_{crack}(L_c, W_c, V_c, \rho, t_C, \varepsilon_c, D_{LDo}) = \begin{pmatrix} 1.80719 \\ 1.80671 \\ 1.80671 \\ 1.80719 \end{pmatrix}$

Idelchik 1994, Diagram 4-12, pg. 219

$KK_{crack}(L_c, W_c, V_c, \rho, t_C, \varepsilon_c, D_{LDo}) = \begin{pmatrix} 1.58502 \\ 1.58459 \\ 1.58459 \\ 1.58502 \end{pmatrix}$

shap-edged orifice (Idelchik 1994, pg. 218, $\alpha = L/D_{oH} < 0.015$)

$KKK_{crack}(L_c, W_c, V_c, \rho, t_C, \varepsilon_c, D_{LDo}) = \begin{pmatrix} 2.61664 \\ 2.61598 \\ 2.61598 \\ 2.61664 \end{pmatrix}$

Encasement annulus K-resistance factors for guides and anchors modeled as thick-edged (long) orifice for $\alpha = L/D_{oH} > 0.015$

Lyons 1982, Eqn 4, pg. 158

| | | | | |
|---|---|---|---|---|
| Existing | $F_K := 0$ | $K_{guide}(v, \rho, t_C, \varepsilon, F_K) = 0.083$ | $K_{anchor}(v, \rho, t_C, \varepsilon, F_K) = 0$ | |
| W058 | $F_K := 1$ | $K_{guide}(v, \rho, t_C, \varepsilon, F_K) = 1.912$ | $K_{anchor}(v, \rho, t_C, \varepsilon, F_K) = 17.686$ | 3/4-in. thk no radius in slots |
| | $F_K := 2$ | $K_{guide}(v, \rho, t_C, \varepsilon, F_K) = 1.912$ | $K_{anchor}(v, \rho, t_C, \varepsilon, F_K) = 11.537$ | 3/4-in. thk with radius in slots |
| W314 | $F_K := 3$ | $K_{guide}(v, \rho, t_C, \varepsilon, F_K) = 0.083$ | $K_{anchor}(v, \rho, t_C, \varepsilon, F_K) = 10.696$ | 1-in. thk with radius in slots |

$V_z := 0 \cdot ft \cdot sec^{-1}$ $p_z := 0 \cdot psi$ $g = 32.174\,ft\,sec^{-2}$

$\Delta V := 0.1 \cdot ft\,sec^{-1}$

**CH2MHILL Hanford Group, Inc.**
**EVALUATION ANALYSIS**

Calc. No. RPP-LJJ-005
Revision: 0
Page No. 5 of 31

Client: CH2M Hill Hanford Group, Inc.
Subject: Secondary Encasement Pipe Pressure Due to Primary Pipe Break in Waste Tank Cross-Site Transfer Piping System
Location: 200 Area - Hanford Site, Richland, Washington

WO/Job No. _____
Date: 9/12/2001 By: L. J. Julyk
Checked: 9/25/01 By: [illegible]
Revised: _____ By: _____

Apply conservation of mass (continuity) and energy (Bernoulli theorem) between nodes (see Figure 1a of Appendix A) and at the pipe break plus the characteristic pump head relation (see Figure 2 of Appendix A) to model the nonlinear system of equations that govern the steady-state flow behavior resulting from a primary pipe break at location $x_B$ relative to pump.

$H'_p(Q) := H_{NTP}(Q) - \Delta H_{pump}$

**SY-101 New Transfer Pump** (RPP-5667 Rev. 0B)
(Canned Motor Westinghouse Pump Model 2A-513-A1)

**Nonlinear governing system of equations**

Given

apply conservation of mass (continuity) and energy (Bernoulli theorem)

$V_0 \ge V_z \quad V_1 \ge V_z \quad V_2 \ge V_z \quad V_3 \ge V_z \quad V_4 \ge V_z \quad V_5 \ge V_z \quad V_6 \ge V_z$

continuity

$$A_{S6}(F_K) \cdot V_2 = F_{D6} \cdot A_f(D_{Di}) \cdot V_3$$
$$A_{S6}(F_K) \cdot V_4 = F_{D9} \cdot A_f(D_{Di}) \cdot V_5$$
$$A_P \cdot V_0 = A_P \cdot V_1 \cdot F_{D3} + A_{crack}(L_c, W_c) \cdot V_6$$
$$A_{crack}(L_c, W_c) \cdot V_6 = A_{S6}(F_K) \cdot (V_2 + V_4)$$

$$H_P = H'_p(A_P \cdot V_0)$$

pump head curve

Bernoulli (between nodes, see Figure 1a of Appendix A)

$$\left[H_P - f\left(R_e(D_{Pi}, V_0, \rho, \mu(\rho, t_C)), \frac{\varepsilon_P}{D_{Pi}}\right) \cdot \frac{x_B}{D_{Pi}} \cdot \frac{(V_0)^2}{2 \cdot g}\right] = \left(\frac{p_0}{\rho \cdot g} + H_B(L_o, H_o, L_S, H_S, x_B)\right) \qquad 1\text{-}2$$

$$\left[\frac{p_0}{\rho \cdot g} + \frac{(V_0)^2}{2 \cdot g}\right] = \left[\frac{p_1}{\rho \cdot g} + \frac{(V_1)^2}{2 \cdot g}\right] \qquad 2\text{-}3$$

$$\left[\frac{p_1}{\rho \cdot g} + \left(1 - f\left(R_e(D_{Pi}, V_1, \rho, \mu(\rho, t_C)), \frac{\varepsilon_P}{D_{Pi}}\right) \cdot \frac{L_P - x_B}{D_{Pi}} - K_E\right) \cdot \frac{(V_1)^2}{2 \cdot g} + H_B(L_o, H_o, L_S, H_S, x_B)\right] = \left[\frac{(V_1)^2}{2 \cdot g} + H + Z\right] \qquad 3\text{-}4$$

$$\left[\frac{p_0}{\rho \cdot g} + \frac{(V_0)^2}{2 \cdot g}\right] = \left[\frac{p_6}{\rho \cdot g} + \frac{(V_6)^2}{2 \cdot g} + K_{crack}\left(L_c, W_c, V_6, \rho, t_C, \varepsilon_c, D_{LDo_{F_K}}\right) \cdot \frac{(V_6)^2}{2 \cdot g}\right] \qquad 2\text{-crack}$$

$$\left[\frac{p_6}{\rho \cdot g} + \frac{(V_6)^2}{2 \cdot g}\right] = \left[\frac{p_2}{\rho \cdot g} + \frac{(V_2)^2}{2 \cdot g}\right] \qquad \text{crack-5}$$

$$\left[\begin{array}{l}\dfrac{p_2}{\rho\cdot g}+H_B(L_o,H_o,L_S,H_S,x_B)-f\left(R_e\left(D_{H_a6}(F_K),V_2,\rho,\mu(\rho,t_C)\right),\dfrac{\varepsilon_S}{D_{H_a6}(F_K)}\right)\cdot\dfrac{x_B-L_o}{D_{H_a6}(F_K)}\cdot\dfrac{(V_2)^2}{2\cdot g}\ldots \\ +\left[1-\left(\begin{array}{l}I(F_K,L_o,x_B)\cdot K_{guide}(V_2,\rho,t_C,\varepsilon_S,F_K)\ldots \\ +J(F_K,L_o,x_B)\cdot K_{anchor}(V_2,\rho,t_C,\varepsilon_S,F_K)+K_D(D_{Di},D_{LDo_{F_K}})\end{array}\right)\right]\cdot\dfrac{(V_2)^2}{2\cdot g}\end{array}\right]=\left[\begin{array}{l}\dfrac{p_3}{\rho\cdot g}\ldots \\ +\dfrac{(V_3)^2}{2\cdot g}\ldots \\ +H_o\end{array}\right] \quad 5\text{-}6$$

$$\left[\frac{p_3}{\rho\cdot g}+\left(1-f\left(R_e\left(D_{Di},V_3,\rho,\mu(\rho,t_C)\right),\frac{\varepsilon_D}{D_{Di}}\right)\cdot\frac{L_D(D_{Di},F_K)}{D_{Di}}-K_E\right)\cdot\frac{(V_3)^2}{2\cdot g}\right]=\frac{(V_3)^2}{2\cdot g}+\Delta Z_D \quad 6\text{-}7$$

$$\left[\frac{p_6}{\rho\cdot g}+\frac{(V_6)^2}{2\cdot g}\right]=\left[\frac{p_4}{\rho\cdot g}+\frac{(V_4)^2}{2\cdot g}\right] \quad \text{crack-8}$$

$$\left[\begin{array}{l}\dfrac{p_4}{\rho\cdot g}+H_B(L_o,H_o,L_S,H_S,x_B)-f\left(R_e\left(D_{H_a6}(F_K),V_4,\rho,\mu(\rho,t_C)\right),\dfrac{\varepsilon_S}{D_{H_a6}(F_K)}\right)\cdot\dfrac{L_S-(x_B-L_o)}{D_{H_a6}(F_K)}\cdot\dfrac{(V_4)^2}{2\cdot g}\ldots \\ +\left[1-\left(\begin{array}{l}M(F_K,L_o,L_S,x_B)\cdot K_{guide}(V_4,\rho,t_C,\varepsilon_S,F_K)\ldots \\ +N(F_K,L_o,L_S,x_B)\cdot K_{anchor}(V_4,\rho,t_C,\varepsilon_S,F_K)+K_D(D_{Di},D_{LDo_{F_K}})\end{array}\right)\right]\cdot\dfrac{(V_4)^2}{2\cdot g}\end{array}\right]=\left[\begin{array}{l}\dfrac{p_5}{\rho\cdot g}\ldots \\ +\dfrac{(V_5)^2}{2\cdot g}\ldots \\ +H_S\end{array}\right] \quad 8\text{-}9$$

$$\left[\frac{p_5}{\rho\cdot g}+\left(1-f\left(R_e\left(D_{Di},V_5,\rho,\mu(\rho,t_C)\right),\frac{\varepsilon_D}{D_{Di}}\right)\cdot\frac{L_D(D_{Di},F_K)}{D_{Di}}-K_E\right)\cdot\frac{(V_5)^2}{2\cdot g}\right]=\frac{(V_5)^2}{2\cdot g}+\Delta Z_D \quad 9\text{-}10$$

Solution function

$$ff(L_o,H_o,L_S,H_S,x_B,\rho,t_C,\varepsilon_P,\varepsilon_S,\varepsilon_D,D_{Di},F_K,F_{D3},F_{D6},F_{D9},\Delta Z_D,L_P,H,Z,L_c,W_c,\varepsilon_c,H_P,p,V):=\mathrm{Find}(H_P,p,V)$$

$$\begin{array}{cccccccc}(p_2 & p_3 & p_5 & p_6 & p_8 & p_9 & p_c)^T & (V_1 \quad V_3 \quad V_5 \quad V_6 \quad V_8 \quad V_9 \quad V_c)^T \\ 0 & 1 & 2 & 3 & 4 & 5 & 6 & 0 \quad 1 \quad 2 \quad 3 \quad 4 \quad 5 \quad 6\end{array}$$

**CH2MHILL Hanford Group, Inc.**

**EVALUATION ANALYSIS**

Calc. No. RPP-LJJ-005
Revision: 0
Page No. 7 of 31

Client: CH2M Hill Hanford Group, Inc.
Subject: Secondary Encasement Pipe Pressure Due to Primary Pipe Break in Waste Tank Cross-Site Transfer Piping System
Location: 200 Area - Hanford Site, Richland, Washington

WO/Job No. _____
Date: 9/12/2001 By: L. J. Julyk
Checked: 9/25/01 By: [illegible]
Revised: _____ By: _____

For plotting, following function returns nth solution variable at points defined in vector $x_B$ n = result variable selected

$$PP(L_o, H_o, L_S, H_S, x_B, \rho, t_C, \varepsilon_P, \varepsilon_S, \varepsilon_D, D_{Di}, F_K, F_{D3}, F_{D6}, F_{D9}, \Delta Z_D, L_P, H, Z, n, L_c, W_c, \varepsilon_c, H_P, p, V) :=$$

```
vp ← 0
H'P ← HP
p' ← p
V' ← V
for i ∈ 0..length(xB) − 1
    xBB ← xBi
    X ← ff(Lo, Ho, LS, HS, xB
    H'P ← X0
    p' ← X1
    V' ← X2
    V' ← V' + ΔV/4
    Y ← X1
    vpi ← Yn
vp
```

**CH2MHILL Hanford Group, Inc.**

**EVALUATION ANALYSIS**

Calc. No. RPP-LJJ-005
Revision: 0
Page No. 8 of 31

Client: CH2M Hill Hanford Group, Inc. WO/Job No. _____
Subject: Secondary Encasement Pipe Pressure Due to Primary Pipe Break in Waste Tank Cross-Site Transfer Piping System
Date: 9/12/2001 By: L. J. Julyk
Checked: 9/25/01 By: [signature]
Location: 200 Area - Hanford Site, Richland, Washington
Revised: _____ By: _____

**RCSTS Supernate Transfer**

**Case 0 break between SY-102 Pump Pit and SY-A Valve Pit**

$L_o := 0 \cdot ft$ $\quad L_o = 0\,ft$ start distance from pump of secondary encasement section under consideration

$H_o := 0 \cdot ft$ $\quad H_o = 0\,ft$ change in elevation of primary pipe from pump to point $L_o$

$L_S := L_{SY102_SYAin}$ $\quad L_S = 339\,ft$ length of secondary encasement section under consideration between drains

$H_S := Z_{SYAin} - Z_{SY102}$ $\quad H_S = 2.58\,ft$ change in elevation of primary pipe from pump to point $L_o + L_S$

Subcase X11 (low and high point drain, $F_{D6} = 1$ and $F_{D9} = 1$)*,
X10 (low point drain, FD6 = 1 and FD9 = 0) 1 1/2-in.drain,
X01 (high point drain, FD6 = 0 and FD9 = 1)*

$D_{Di} := D_{D1.5}$ $\quad \rho := 1.3 \cdot \frac{kg}{liter}$

$t_C := 60$ °C

**Initial guesses (X11)** $Q := 326 \cdot gpm$ $\quad V_1 := \frac{Q}{A_P}$ $\quad V_1 = 14.148 \frac{ft}{sec}$ flow velocities

Both low and high point drains open

$F_K := 0$ $\quad F_{D3} := 1$ $\quad F_{D6} := 1$ $\quad F_{D9} := 1$

$H_{P11} := H'_p(Q)$ pump head $\quad H_{P11} = 240\,ft$

$p_2 := 148 \cdot psi$ primary pipe pressure just up stream of break

$p_3 := 149 \cdot psi$ primary pipe pressure just down stream of break

$p_5 := 20 \cdot psi$ secondary pipe pressure just up stream of break

$p_6 := 12 \cdot psi$ secondary pipe pressure at drain up stream of break

$p_8 := 20 \cdot psi$ secondary pipe pressure just down stream of break

$p_9 := 8 \cdot psi$ secondary pipe pressure at drain down stream of break

$$V_5 := \frac{V_1 \cdot F_{D6} + \Delta V}{5.4}$$

$$V_6 := V_5 \cdot \frac{A_{S6}(F_K)}{A_f(D_{Di})} \qquad \frac{A_{S6}(F_K)}{A_P} = 2.607$$

$$V_8 := \frac{V_1 \cdot F_{D9} + \Delta V}{6.5} \qquad \frac{A_{S6}(F_K)}{A_f(D_{Di})} = 9.46$$

$$V_9 := V_8 \cdot \frac{A_{S6}(F_K)}{A_f(D_{Di})}$$

$p_c := 1 \cdot psi$ apply conservation of mass (continuity) at break

$$V_3 := V_1 - \frac{A_{S6}(F_K)}{A_P} \cdot (V_5 + V_8) \quad V_3 = 1.56 \frac{ft}{sec}$$

$$V_c := \frac{A_{S6}(F_K)}{A_{crack}(L_c, W_c)} \cdot (V_5 + V_8) \qquad V_c = 93.1 \frac{ft}{sec}$$

$$p_{11} := (p_2\ p_3\ p_5\ p_6\ p_8\ p_9\ p_c)^T \qquad V_{11} := (V_1\ V_3\ V_5\ V_6\ V_8\ V_9\ V_c)^T$$

**use Existing Piping Guide/Anchor** $\quad F_K = 0$

**CH2MHILL Hanford Group, Inc.**

**EVALUATION ANALYSIS**

Calc. No. RPP-LJJ-005
Revision: 0
Page No. 9 of 31

Client: CH2M Hill Hanford Group, Inc. WO/Job No. _____
Subject: Secondary Encasement Pipe Pressure Due to Primary Pipe Break in Waste Tank Cross-Site Transfer Piping System
Location: 200 Area - Hanford Site, Richland, Washington

Date: 9/12/2001 By: L. J. Julyk
Checked: 9/25/01 By: [signature]
Revised: _____ By: _____

**Initial guesses (X10)** $Q := 288 \cdot gpm$ $V_1 := \frac{Q}{A_P}$ $V_1 = 12.499 \frac{ft}{sec}$ flow velocities

Low point drain open

$F_K = 0$ $F_{D3} = 1$ $F_{D6} := 1$ $F_{D9} := 0$

$H_{P10} := H'_p(Q)$ pump head $H_{P10} = 306\,ft$

$p_2 := 160 \cdot psi$ primary pipe pressure just up stream of break

$p_3 := 160 \cdot psi$ primary pipe pressure just down stream of break

$p_5 := 65 \cdot psi$ secondary pipe pressure just up stream of break

$p_6 := 30 \cdot psi$ secondary pipe pressure at drain up stream of break

$p_8 := 65 \cdot psi$ secondary pipe pressure just down stream of break

$p_9 := 46 \cdot psi$ secondary pipe pressure at drain down stream of break

$V_5 := \frac{V_1 \cdot F_{D6} + \Delta V}{3.1}$

$V_6 := V_5 \cdot \frac{A_{S6}(F_K)}{A_f(D_{Di})}$ $\frac{A_{S6}(F_K)}{A_P} = 2.607$

$V_8 := \frac{V_1 \cdot F_{D9} + \Delta V}{50}$ $\frac{A_{S6}(F_K)}{A_f(D_{Di})} = 9.46$

$V_9 := V_8 \cdot \frac{A_{S6}(F_K)}{A_f(D_{Di})}$

$p_c := 12 \cdot psi$

apply conservation of mass (continuity) at break

$V_3 := V_1 - \frac{A_{S6}(F_K)}{A_P} \cdot (V_5 + V_8)$ $V_3 = 1.9 \frac{ft}{sec}$

$V_c := \frac{A_{S6}(F_K)}{A_{crack}(L_c, W_c)} \cdot (V_5 + V_8)$ $V_c = 78.4 \frac{ft}{sec}$

$p_{10} := (p_2\ p_3\ p_5\ p_6\ p_8\ p_9\ p_c)^T$ $V_{10} := (V_1\ V_3\ V_5\ V_6\ V_8\ V_9\ V_c)^T$

**Initial guesses (X01)** $Q := 302 \cdot gpm$ $V_1 := \frac{Q}{A_P}$ $V_1 = 13.106 \frac{ft}{sec}$ low velocities

High point drain open

$F_K = 0$ $F_{D3} = 1$ $F_{D6} := 0$ $F_{D9} := 1$

$H_{P01} := H'_p(Q)$ pump head $H_{P01} = 283\,ft$

$p_2 := 179 \cdot psi$ primary pipe pressure just up stream of break

$p_3 := 179 \cdot psi$ primary pipe pressure just down stream of break

$p_5 := 75 \cdot psi$ *secondary pipe pressure just up stream of break*

$p_6 := 53 \cdot psi$ secondary pipe pressure at drain up stream of break

$p_8 := 75 \cdot psi$ secondary pipe pressure just down stream of break

$p_9 := 33 \cdot psi$ *secondary pipe pressure at drain down stream of break*

$V_5 := \frac{V_1 \cdot F_{D6} + \Delta V}{3}$

$V_6 := V_5 \cdot \frac{A_{S6}(F_K)}{A_f(D_{Di})}$ $\frac{A_{S6}(F_K)}{A_P} = 2.607$

$V_8 := \frac{V_1 \cdot F_{D9} + \Delta V}{3}$ $\frac{A_{S6}(F_K)}{A_f(D_{Di})} = 9.46$

$V_9 := V_8 \cdot \frac{A_{S6}(F_K)}{A_f(D_{Di})}$

$p_c := 17 \cdot psi$

apply conservation of mass (continuity) at break

$V_3 := V_1 - \frac{A_{S6}(F_K)}{A_P} \cdot (V_5 + V_8)$ $V_3 = 1.55 \frac{ft}{sec}$

$V_c := \frac{A_{S6}(F_K)}{A_{crack}(L_c, W_c)} \cdot (V_5 + V_8)$ $V_c = 85.5 \frac{ft}{sec}$

$p_{01} := (p_2\ p_3\ p_5\ p_6\ p_8\ p_9\ p_c)^T$ $V_{01} := (V_1\ V_3\ V_5\ V_6\ V_8\ V_9\ V_c)^T$

0 1 2 3 4 5 6 0 1 2 3 4 5 6

**CH2MHILL Hanford Group, Inc.**

**EVALUATION ANALYSIS**

Calc. No. RPP-LJJ-005
Revision: 0
Page No. 10 of 31

Client: CH2M Hill Hanford Group, Inc.
Subject: Secondary Encasement Pipe Pressure Due to Primary Pipe Break in Waste Tank Cross-Site Transfer Piping System
Location: 200 Area - Hanford Site, Richland, Washington

WO/Job No. _____
Date: 9/12/2001 By: L. J. Julyk
Checked: 9/25/01 By: K. L. Schlosser
Revised: _____ By: _____

**Case 0 (X11)**

**SY-101 New Transfer Pump** (RPP-5667 Rev. 0B)
(Canned Motor Westinghouse Pump Model 2A-513-A1)

Input==========

$L_o = 0\,ft$ $\quad H = 7\,ft$ $\quad \varepsilon_P = 2\,mil$

$\boxed{L_S = 339\,ft}$ $\quad \rho = 1.3\,\frac{kg}{liter}$ $\quad Z = 0\,ft$ $\quad \varepsilon_S = 5\,mil$ $\quad D_{LDo_{F_K}} = 0\,in$ $\quad F_K = 0$

$L_P = 51015\,ft$ $\quad F_{D3} = 1$ $\quad \varepsilon_D = 5\,mil$ $\quad L_c = 10\,in$

$\boxed{x_B := 0 \cdot ft + L_o}$ $\quad t_C = 60\ ^{\circ}C$ $\quad D_{Di} = 1.61\,in$ $\quad \Delta Z_D = -1\,ft$ $\quad L_D(D_{Di}, F_K) = 7.025\,ft$ $\quad W_c = 0.1\,in$

$F_{D6} := 1$ $\quad F_{D9} := 1$ $\quad J(F_K, L_o, x_B) = 0$ $\quad N(F_K, L_o, L_S, x_B) = 0$ $\quad \varepsilon_c = 1\,mil$

$I(F_K, L_o, x_B) = 0$ $\quad M(F_K, L_o, L_S, x_B) = 38$

$$\begin{pmatrix} h_{P11} \\ P_{11} \\ v_{11} \end{pmatrix} := ff(L_o, H_o, L_S, H_S, x_B, \rho, t_C, \varepsilon_P, \varepsilon_S, \varepsilon_D, D_{Di}, F_K, F_{D3}, F_{D6}, F_{D9}, \Delta Z_D, L_P, H, Z, L_c, W_c, \varepsilon_c, H_{P11}, p_{11}, V_{11})$$

$$\begin{pmatrix} P_2 \\ P_3 \\ P_5 \\ P_6 \\ P_8 \\ P_9 \\ P_{crack} \end{pmatrix} := P_{11} \quad \begin{pmatrix} v_1 \\ v_3 \\ v_5 \\ v_6 \\ v_8 \\ v_9 \\ v_{crack} \end{pmatrix} := v_{11} \qquad P_{11} = \begin{pmatrix} 141.067 \\ 142.73 \\ 17.324 \\ 10.649 \\ 17.333 \\ 8.538 \\ -52.195 \end{pmatrix} psi \quad v_{11} = \begin{pmatrix} 13.903 \\ 1.847 \\ 2.434 \\ 23.036 \\ 2.191 \\ 20.742 \\ 89.125 \end{pmatrix} ft\,sec^{-1}$$

Results----------

$h_{P11} = 250\,ft$ $\quad \mu(\rho, t_C) = 1.197\,cP$ $\quad L_{i_{F_K}} = 9\,ft$ $\quad L_{j_{F_K}} = 9 \times 10^4\,ft$

$P_2 = 141.1\,psi$ $\quad v_1 = 13.9\,ft\,sec^{-1}$ $\quad A_P \cdot v_1 = 320.3\,gpm$ $\quad D_{Di} = 1.61\,in$

$P_3 = 142.7\,psi$ $\quad F_{D3} \cdot v_3 = 1.8\,ft\,sec^{-1}$ $\quad F_{D3} \cdot A_P \cdot v_3 = 42.6\,gpm$

$P_5 = 17.3\,psi$ $\quad v_5 = 2.4\,ft\,sec^{-1}$ $\quad A_{S6}(F_K) \cdot v_5 = 146.2\,gpm$

$P_6 = 10.6\,psi$ $\quad F_{D6} \cdot v_6 = 23\,ft\,sec^{-1}$ $\quad F_{D6} \cdot A_f(D_{Di}) \cdot v_6 = 146.2\,gpm$

$P_8 = 17.3\,psi$ $\quad v_8 = 2.2\,ft\,sec^{-1}$ $\quad A_{S6}(F_K) \cdot v_8 = 131.6\,gpm$

$P_9 = 8.5\,psi$ $\quad F_{D9} \cdot v_9 = 20.7\,ft\,sec^{-1}$ $\quad F_{D9} \cdot A_f(D_{Di}) \cdot v_9 = 131.6\,gpm$

$P_{crack} = -52.2\,psi$ $\quad v_1 \cdot A_P = F_{D3} \cdot A_P \cdot v_3 + A_{S6}(F_K) \cdot v_5 + A_{S6}(F_K) \cdot v_8 = 320.3\,gpm$

(continuity check at break, OK)

$v_{crack} = 89.1\,ft\,sec^{-1}$

$R_e(D_{H_crack}(L_c, W_c), v_{crack}, \rho, \mu(\rho, t_C)) = 1 \times 10^5$

$P_2 - P_5 = 123.744\,psi$

**CH2MHILL Hanford Group, Inc.**

**EVALUATION ANALYSIS**

Calc. No. RPP-LJJ-005
Revision: 0
Page No. 11 of 31

Client: CH2M Hill Hanford Group, Inc.
Subject: Secondary Encasement Pipe Pressure Due to Primary Pipe Break in Waste Tank Cross-Site Transfer Piping System
Location: 200 Area - Hanford Site, Richland, Washington

WO/Job No. _____
Date: 9/12/2001 By: L. J. Julyk
Checked: 9/25/01 By: [signature]
Revised: _____ By: _____

**Case 0 (X10)**

**SY-101 New Transfer Pump** (RPP-5667 Rev. 0B)
(Canned Motor Westinghouse Pump Model 2A-513-A1)

Input==========

$L_o = 0\,ft$ $\quad H = 7\,ft$ $\quad \varepsilon_P = 2\,mil$

$\boxed{L_S = 339\,ft}$ $\quad \rho = 1.3\,\frac{kg}{liter}$ $\quad Z = 0\,ft$ $\quad \varepsilon_S = 5\,mil$ $\quad D_{LDo_{F_K}} = 0\,in$ $\quad F_K = 0$

$L_P = 51015\,ft$ $\quad F_{D3} = 1$ $\quad \varepsilon_D = 5\,mil$ $\quad L_c = 10\,in$

$\boxed{x_B := 0 \cdot ft + L_c}$ $\quad t_C = 60\,°C$ $\quad D_{Di} = 1.61\,in$ $\quad \Delta Z_D = -1\,ft$ $\quad L_D(D_{Di}, F_K) = 7.025\,ft$ $\quad W_c = 0.1\,in$

$F_{D6} := 1$ $\quad F_{D9} := 0$ $\quad J(F_K, L_o, x_B) = 0$ $\quad N(F_K, L_o, L_S, x_B) = 0$ $\quad \varepsilon_c = 1\,mil$

$I(F_K, L_o, x_B) = 0$ $\quad M(F_K, L_o, L_S, x_B) = 38$

$$\begin{pmatrix} h_{P10} \\ P_{10} \\ v_{10} \end{pmatrix} := ff(L_o, H_o, L_S, H_S, x_B, \rho, t_C, \varepsilon_P, \varepsilon_S, \varepsilon_D, D_{Di}, F_K, F_{D3}, F_{D6}, F_{D9}, \Delta Z_D, L_P, H, Z, L_c, W_c, \varepsilon_c, H_{P10}, p_{10}, V_{10})$$

$$\begin{pmatrix} P_2 \\ P_3 \\ P_5 \\ P_6 \\ P_8 \\ P_9 \\ P_{crack} \end{pmatrix} := P_{10} \qquad \begin{pmatrix} v_1 \\ v_3 \\ v_5 \\ v_6 \\ v_8 \\ v_9 \\ v_{crack} \end{pmatrix} := v_{10}$$

Results----------

$h_{P10} = 283\,ft$ $\quad \mu(\rho, t_C) = 1.197\,cP$ $\quad L_{i_{F_K}} = 9\,ft$ $\quad L_{j_{F_K}} = 9 \times 10^4\,ft$

$P_2 = 159.5\,psi$ $\quad v_1 = 13.1\,ft\,sec^{-1}$ $\quad A_P \cdot v_1 = 301.7\,gpm$ $\quad D_{Di} = 1.61\,in$

$P_3 = 161\,psi$ $\quad F_{D3} \cdot v_3 = 2\,ft\,sec^{-1}$ $\quad F_{D3} \cdot A_P \cdot v_3 = 45.5\,gpm$

$P_5 = 54.2\,psi$ $\quad v_5 = 4.3\,ft\,sec^{-1}$ $\quad A_{S6}(F_K) \cdot v_5 = 256.2\,gpm$

$P_6 = 33.7\,psi$ $\quad F_{D6} \cdot v_6 = 40.4\,ft\,sec^{-1}$ $\quad F_{D6} \cdot A_f(D_{Di}) \cdot v_6 = 256.2\,gpm$

$P_8 = 54.4\,psi$ $\quad v_8 = 0\,ft\,sec^{-1}$ $\quad A_{S6}(F_K) \cdot v_8 = 0\,gpm$

$P_9 = 37.2\,psi$ $\quad F_{D9} \cdot v_9 = 0\,ft\,sec^{-1}$ $\quad F_{D9} \cdot A_f(D_{Di}) \cdot v_9 = 0\,gpm$

$P_{crack} = -4.8\,psi$ $\quad v_1 \cdot A_P = F_{D3} \cdot A_P \cdot v_3 + A_{S6}(F_K) \cdot v_5 + A_{S6}(F_K) \cdot v_8 = 301.7\,gpm$

(continuity check at break, OK)

$v_{crack} = 82.2\,ft\,sec^{-1}$

$R_e(D_{H_crack}(L_c, W_c), v_{crack}, \rho, \mu(\rho, t_C)) = 1 \times 10^5$

$P_2 - P_5 = 105.306\,psi$

**CH2MHILL Hanford Group, Inc.**

**EVALUATION ANALYSIS**

Calc. No. RPP-LJJ-005
Revision: 0
Page No. 12 of 31

Client: CH2M Hill Hanford Group, Inc.
Subject: Secondary Encasement Pipe Pressure Due to Primary Pipe Break in Waste Tank Cross-Site Transfer Piping System
Location: 200 Area - Hanford Site, Richland, Washington

WO/Job No. _____
Date: 9/12/2001 By: L. J. Julyk
Checked: 9/25/01 By: [signature]
Revised: _____ By: _____

**Case 0 (X01)**

*Input*==========

**SY-101 New Transfer Pump** (RPP-5667 Rev. 0B)
(Canned Motor Westinghouse Pump Model 2A-513-A1)

$L_o = 0\,ft$ $\quad H = 7\,ft$ $\quad \varepsilon_P = 2\,mil$

$\boxed{L_S = 339\,ft}$ $\quad \rho = 1.3\,\frac{kg}{liter}$ $\quad Z = 0\,ft$ $\quad \varepsilon_S = 5\,mil$ $\quad D_{LDo_{F_K}} = 0\,in$ $\quad F_K = 0$

$L_P = 51015\,ft$ $\quad F_{D3} = 1$ $\quad \varepsilon_D = 5\,mil$ $\quad L_c = 10\,in$

$\boxed{x_B := 0 \cdot ft + L_o}$ $\quad t_C = 60\ ^{\circ}C$ $\quad D_{Di} = 1.61\,in$ $\quad \Delta Z_D = -1\,ft$ $\quad L_D(D_{Di}, F_K) = 7.025\,ft$ $\quad W_c = 0.1\,in$

$F_{D6} := 0$ $\quad F_{D9} := 1$ $\quad J(F_K, L_o, x_B) = 0$ $\quad N(F_K, L_o, L_S, x_B) = 0$ $\quad \varepsilon_c = 1\,mil$

$I(F_K, L_o, x_B) = 0$ $\quad M(F_K, L_o, L_S, x_B) = 38$

$$\begin{pmatrix} h_{P01} \\ P_{01} \\ v_{01} \end{pmatrix} := ff(L_o, H_o, L_S, H_S, x_B, \rho, t_C, \varepsilon_P, \varepsilon_S, \varepsilon_D, D_{Di}, F_K, F_{D3}, F_{D6}, F_{D9}, \Delta Z_D, L_P, H, Z, L_c, W_c, \varepsilon_c, H_{P01}, p_{01}, V_{01})$$

$$\begin{pmatrix} P_2 \\ P_3 \\ P_5 \\ P_6 \\ P_8 \\ P_9 \\ P_{crack} \end{pmatrix} := P_{01} \qquad \begin{pmatrix} v_1 \\ v_3 \\ v_5 \\ v_6 \\ v_8 \\ v_9 \\ v_{crack} \end{pmatrix} := v_{01}$$

Results----------

$h_{P01} = 289\,ft$ $\quad \mu(\rho, t_C) = 1.197\,cP$ $\quad L_{i_{F_K}} = 9\,ft$ $\quad L_{j_{F_K}} = 9 \times 10^4\,ft$

$P_2 = 162.8\,psi$ $\quad v_1 = 12.9\,ft\,sec^{-1}$ $\quad A_P \cdot v_1 = 298.3\,gpm$ $\quad D_{Di} = 1.61\,in$

$P_3 = 164.2\,psi$ $\quad F_{D3} \cdot v_3 = 2\,ft\,sec^{-1}$ $\quad F_{D3} \cdot A_P \cdot v_3 = 46\,gpm$

$P_5 = 60.9\,psi$ $\quad v_5 = 0\,ft\,sec^{-1}$ $\quad A_{S6}(F_K) \cdot v_5 = 0\,gpm$

$P_6 = 42.8\,psi$ $\quad F_{D6} \cdot v_6 = 0\,ft\,sec^{-1}$ $\quad F_{D6} \cdot A_f(D_{Di}) \cdot v_6 = 0\,gpm$

$P_8 = 60.7\,psi$ $\quad v_8 = 4.2\,ft\,sec^{-1}$ $\quad A_{S6}(F_K) \cdot v_8 = 252.3\,gpm$

$P_9 = 32.7\,psi$ $\quad F_{D9} \cdot v_9 = 39.8\,ft\,sec^{-1}$ $\quad F_{D9} \cdot A_f(D_{Di}) \cdot v_9 = 252.3\,gpm$

$P_{crack} = 3.5\,psi$ $\quad v_1 \cdot A_P = F_{D3} \cdot A_P \cdot v_3 + A_{S6}(F_K) \cdot v_5 + A_{S6}(F_K) \cdot v_8 = 298.3\,gpm$

(continuity check at break, OK)

$v_{crack} = 80.9\,ft\,sec^{-1}$

$R_e(D_{H_crack}(L_c, W_c), v_{crack}, \rho, \mu(\rho, t_C)) = 1 \times 10^5$

$P_2 - P_5 = 101.928\,psi$

**CH2MHILL Hanford Group, Inc.**

**EVALUATION ANALYSIS**

Calc. No. RPP-LJJ-005
Revision: 0
Page No. 13 of 31

Client: CH2M Hill Hanford Group, Inc.
Subject: Secondary Encasement Pipe Pressure Due to Primary Pipe Break in Waste Tank Cross-Site Transfer Piping System
Location: 200 Area - Hanford Site, Richland, Washington

WO/Job No. _____
Date: 9/12/2001 By: L. J. Julyk
Checked: 9/25/01 By: [illegible]
Revised: _____ By: _____

**Figure 1a. Case 0: Maximum Pressure in Cross-Site Encasement Pipe Due to Primary Pipe Break (Between SY-102 Pump Pit and SY-A Valve Pit) within Encasement Section of Length $L_s$ Starting at $L_o$ Relative to Transfer Pump for Supernate Waste Transfer at Temperature of 60 °C.**

$F_K = 0$ Low point drain $L_c = 10\,in$

$Z = 0\,ft$ $t_C = 60\,°C$ $\rho = 1.3\,\frac{kg}{liter}$ $\mu(\rho, t_C) = 1.197\,cP$ $D_{LDo_{F_K}} = 0\,in$ $D_{Di} = 1.61\,in$ $W_c = 0.1\,in$

$H = 6.72\,ft$ $L_o = 0\,ft$ $L_S = 339\,ft$ $L_P = 51015\,ft$ $L_{i_{F_K}} = 9\,ft$ $\varepsilon_P = 2\,mil$ $L_D(D_{Di}, F_K) = 7\,ft$ $\varepsilon_c = 1\,mil$

$\Delta Z_D = -1\,ft$ $H_o = 0\,ft$ $H_S = 2.58\,ft$ $F_{D3} = 1$ $L_{j_{F_K}} = 9 \times 10^4\,ft$ $\varepsilon_S = 5\,mil$ $\varepsilon_D = 5\,mil$

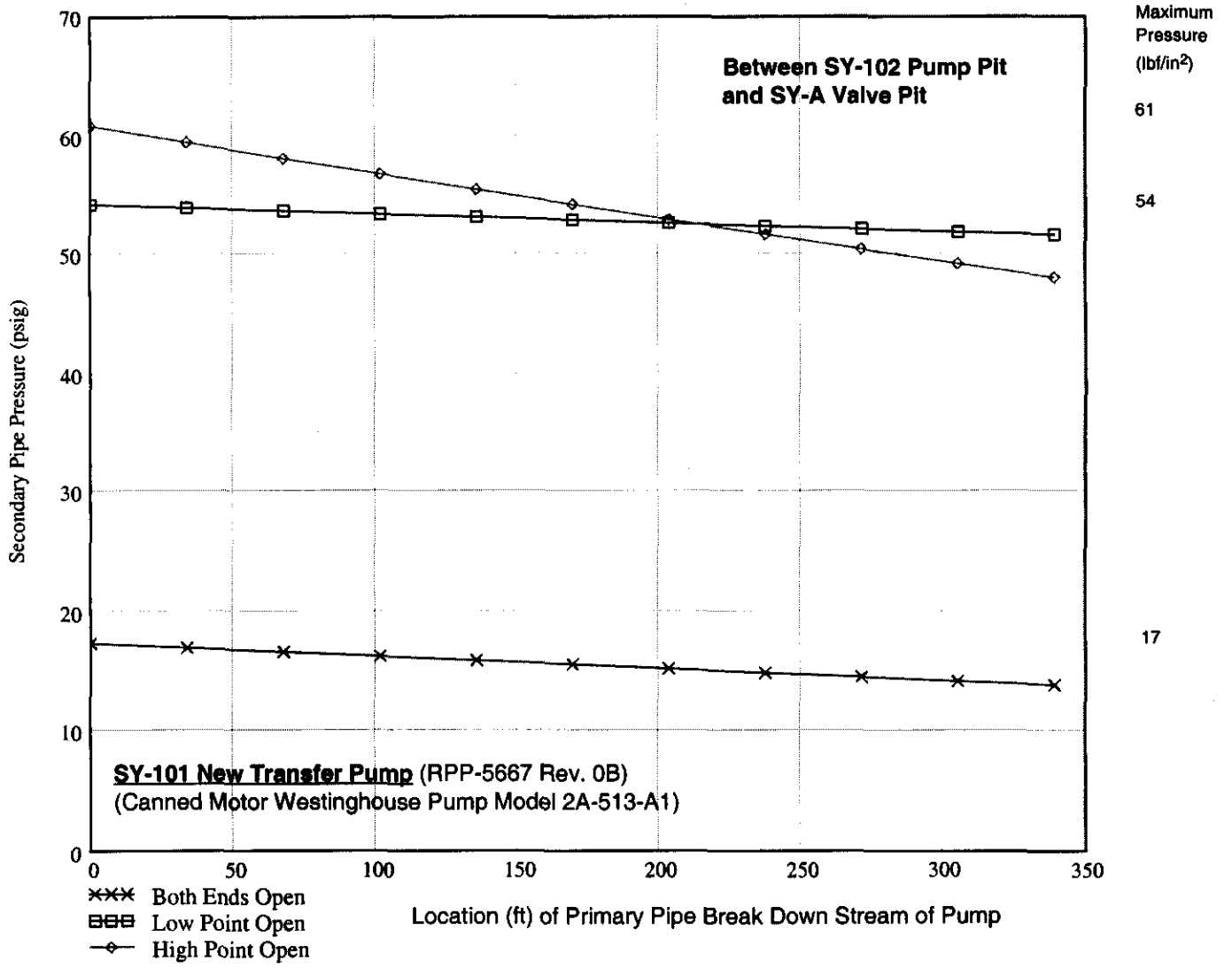

**CH2MHILL Hanford Group, Inc.**

**EVALUATION ANALYSIS**

Calc. No. RPP-LJJ-005
Revision: 0
Page No. 14 of 31

Client: CH2M Hill Hanford Group, Inc.
Subject: Secondary Encasement Pipe Pressure Due to Primary Pipe Break in Waste Tank Cross-Site Transfer Piping System
Location: 200 Area - Hanford Site, Richland, Washington

WO/Job No. _____
Date: 9/12/2001 By: L. J. Julyk
Checked: 9/25/01 By: [illegible]
Revised: _____ By: _____

**Supernate Transfer**

**Case 1 break between SY-A Valve Pit and Diversion Box**

$L_o := L_{SY102_SYAin}$ $L_o = 339\,ft$ start distance from pump of secondary encasement section under consideration

$H_o := Z_{SYAin} - Z_{SY102}$ $H_o = 2.58\,ft$ change in elevation of primary pipe from pump to point $L_o$

$L_S := L_{SYAin_DB1in}$ $L_S = 5635\,ft$ length of secondary encasement section under consideration between drains

$H_S := Z_{DB1in} - Z_{SY102}$ $H_S = 11.67\,ft$ change in elevation of primary pipe from pump to point $L_o + L_S$

Subcase X11 (low and high point drain, $F_{D6} = 1$ and $F_{D9} = 1$)*,
X10 (low point drain, FD6 = 1 and FD9 = 0)*,
X01 (high point drain, FD6 = 0 and FD9 = 1)

$\boxed{D_{Di} := D_{D2i}}$

**Initial guesses (X11)** $Q := 161.5 \cdot gpm$ $V_1 := \frac{Q}{A_P}$ $V_1 = 7.009\,\frac{ft}{sec}$ flow velocities

Both low and high point drains open

$\boxed{F_K := 1}$ $F_{D3} = 1$ $F_{D6} := 1$ $F_{D9} := 1$

$H_{P11} := H'_p(Q)$ pump head $H_{P11} = 469\,ft$

$p_2 := 62 \cdot psi$ primary pipe pressure just up stream of break

$p_3 := 62 \cdot psi$ primary pipe pressure just down stream of break

$p_5 := 39 \cdot psi$ secondary pipe pressure just up stream of break

$p_6 := 5.4 \cdot psi$ secondary pipe pressure at drain up stream of break

$p_8 := 39 \cdot psi$ secondary pipe pressure just down stream of break

$p_9 := 1 \cdot psi$ secondary pipe pressure at drain down stream of break

$V_5 := \frac{V_1 \cdot F_{D6} + \Delta V}{3.2}$

$V_6 := V_5 \cdot \frac{A_{S6}(F_K)}{A_f(D_{Di})}$ $\frac{A_{S6}(F_K)}{A_P} = 2.596$

$V_8 := \frac{V_1 \cdot F_{D9} + \Delta V}{80}$ $\frac{A_{S6}(F_K)}{A_f(D_{Di})} = 5.72$

$V_9 := V_8 \cdot \frac{A_{S6}(F_K)}{A_f(D_{Di})}$

$p_c := 26 \cdot psi$ apply conservation of mass (continuity) at break

$V_3 := V_1 - \frac{A_{S6}(F_K)}{A_P} \cdot (V_5 + V_8)$ $V_3 = 1.01\,\frac{ft}{sec}$

$V_c := \frac{A_{S6}(F_K)}{A_{crack}(L_c, W_c)} \cdot (V_5 + V_8)$ $V_c = 44.3\,\frac{ft}{sec}$

$p_{11} := (p_2\ p_3\ p_5\ p_6\ p_8\ p_9\ p_c)^T$ $V_{11} := (V_1\ V_3\ V_5\ V_6\ V_8\ V_9\ V_c)^T$

**use W-058 guide/anchor** $F_K = 1$

**CH2MHILL Hanford Group, Inc.**

**EVALUATION ANALYSIS**

Calc. No. RPP-LJJ-005
Revision: 0
Page No. 15 of 31

Client: CH2M Hill Hanford Group, Inc. WO/Job No. _____
Subject: Secondary Encasement Pipe Pressure Due to Primary Pipe Break in Waste Tank Cross-Site Transfer Piping System
Date: 9/12/2001 By: L. J. Julyk
Checked: 9/25/01 By: B. J. Schlosser
Location: 200 Area - Hanford Site, Richland, Washington
Revised: _____ By: _____

**Initial guesses (X10)** $Q := 100 \cdot gpm$ $V_1 := \frac{Q}{A_P}$ $V_1 = 4.34 \frac{ft}{sec}$ flow velocities

Low point drain open

$F_K = 1$ $F_{D3} = 1$ $F_{D6} := 1$ $F_{D9} := 0$

$H_{P10} := H'_p(Q)$ pump head $H_{P10} = 516\,ft$

$p_2 := 50 \cdot psi$ primary pipe pressure just up stream of break

$p_3 := 50 \cdot psi$ primary pipe pressure just down stream of break

$p_5 := 20 \cdot psi$ secondary pipe pressure just up stream of break

$p_6 := 20 \cdot psi$ secondary pipe pressure at drain up stream of break

$p_8 := 20 \cdot psi$ secondary pipe pressure just down stream of break

$p_9 := 5 \cdot psi$ secondary pipe pressure at drain down stream of break

$V_5 := \frac{V_1 \cdot F_{D6} + \Delta V}{2.9}$

$V_6 := V_5 \cdot \frac{A_{S6}(F_K)}{A_f(D_{Di})}$ $\frac{A_{S6}(F_K)}{A_P} = 2.596$

$V_8 := \frac{V_1 \cdot F_{D9} + \Delta V}{50}$ $\frac{A_{S6}(F_K)}{A_f(D_{Di})} = 5.72$

$V_9 := V_8 \cdot \frac{A_{S6}(F_K)}{A_f(D_{Di})}$

$p_c := 5 \cdot psi$ apply conservation of mass (continuity) at break

$V_3 := V_1 - \frac{A_{S6}(F_K)}{A_P} \cdot (V_5 + V_8)$ $V_3 = 0.36 \frac{ft}{sec}$

$V_c := \frac{A_{S6}(F_K)}{A_{crack}(L_c, W_c)} \cdot (V_5 + V_8)$ $V_c = 29.4 \frac{ft}{sec}$

$p_{10} := (p_2\ p_3\ p_5\ p_6\ p_8\ p_9\ p_c)^T$ $V_{10} := (V_1\ V_3\ V_5\ V_6\ V_8\ V_9\ V_c)^T$

**Initial guesses (X01)** $Q := 227 \cdot gpm$ $V_1 := \frac{Q}{A_P}$ $V_1 = 9.852 \frac{ft}{sec}$ flow velocities

High point drain open

$F_K = 1$ $F_{D3} = 1$ $F_{D6} := 0$ $F_{D9} := 1$

$H_{P01} := H'_p(Q)$ pump head $H_{P01} = 396\,ft$

$p_2 := 204 \cdot psi$ primary pipe pressure just up stream of break

$p_3 := 204 \cdot psi$ primary pipe pressure just down stream of break

$p_5 := 154 \cdot psi$ secondary pipe pressure just up stream of break

$p_6 := 124 \cdot psi$ secondary pipe pressure at drain up stream of break

$p_8 := 154 \cdot psi$ secondary pipe pressure just down stream of break

$p_9 := 9.05 \cdot psi$ secondary pipe pressure at drain down stream of break

$V_5 := \frac{V_1 \cdot F_{D6} + \Delta V}{10}$

$V_6 := V_5 \cdot \frac{A_{S6}(F_K)}{A_f(D_{Di})}$ $\frac{A_{S6}(F_K)}{A_P} = 2.596$

$V_8 := \frac{V_1 \cdot F_{D9} + \Delta V}{3.5}$ $\frac{A_{S6}(F_K)}{A_f(D_{Di})} = 5.72$

$V_9 := V_8 \cdot \frac{A_{S6}(F_K)}{A_f(D_{Di})}$

$p_c := 126 \cdot psi$ apply conservation of mass (continuity) at break

$V_3 := V_1 - \frac{A_{S6}(F_K)}{A_P} \cdot (V_5 + V_8)$ $V_3 = 2.44 \frac{ft}{sec}$

$V_c := \frac{A_{S6}(F_K)}{A_{crack}(L_c, W_c)} \cdot (V_5 + V_8)$ $V_c = 54.8 \frac{ft}{sec}$

$p_{01} := (p_2\ p_3\ p_5\ p_6\ p_8\ p_9\ p_c)^T$ $V_{01} := (V_1\ V_3\ V_5\ V_6\ V_8\ V_9\ V_c)^T$

0 1 2 3 4 5 6 0 1 2 3 4 5 6

**CH2MHILL Hanford Group, Inc.**

**EVALUATION ANALYSIS**

Calc. No. RPP-LJJ-005
Revision: 0
Page No. 16 of 31

Client: CH2M Hill Hanford Group, Inc.
Subject: Secondary Encasement Pipe Pressure Due to Primary Pipe Break in Waste Tank Cross-Site Transfer Piping System
Location: 200 Area - Hanford Site, Richland, Washington

WO/Job No. _____
Date: 9/12/2001 By: L. J. Julyk
Checked: 9/25/01 By: R. H. Schlosser
Revised: _____ By: _____

**Case 1 (X11)**

**SY-101 New Transfer Pump** (RPP-5667 Rev. 0B)
(Canned Motor Westinghouse Pump Model 2A-513-A1)

Input==========

$L_o = 339\,ft$ $H = 7\,ft$ $\varepsilon_P = 2\,mil$

$L_S = 5635\,ft$ $\rho = 1.3\,\frac{kg}{liter}$ $Z = 0\,ft$ $\varepsilon_S = 5\,mil$ $D_{LDo_{F_K}} = 0.31\,in$ $F_K = 1$

$L_P = 51015\,ft$ $F_{D3} = 1$ $\varepsilon_D = 5\,mil$ $L_c = 10\,in$

$x_B := 0 \cdot ft + L_o$ $t_C = 60\ ^{\circ}C$ $D_{Di} = 2.067\,in$ $\Delta Z_D = -1\,ft$ $L_D(D_{Di}, F_K) = 21.086\,ft$ $W_c = 0.1\,in$

$F_{D6} := 1$ $F_{D9} := 1$ $J(F_K, L_o, x_B) = 0$ $N(F_K, L_o, L_S, x_B) = 10$ $\varepsilon_c = 1\,mil$

$I(F_K, L_o, x_B) = 0$ $M(F_K, L_o, L_S, x_B) = 460$

$$\begin{pmatrix} h_{P11} \\ P_{11} \\ v_{11} \end{pmatrix} := ff(L_o, H_o, L_S, H_S, x_B, \rho, t_C, \varepsilon_P, \varepsilon_S, \varepsilon_D, D_{Di}, F_K, F_{D3}, F_{D6}, F_{D9}, \Delta Z_D, L_P, H, Z, L_c, W_c, \varepsilon_c, H_{P11}, p_{11}, V_{11})$$

$$\begin{pmatrix} P_2 \\ P_3 \\ P_5 \\ P_6 \\ P_8 \\ P_9 \\ P_{crack} \end{pmatrix} := P_{11} \quad \begin{pmatrix} v_1 \\ v_3 \\ v_5 \\ v_6 \\ v_8 \\ v_9 \\ v_{crack} \end{pmatrix} := v_{11} \qquad P_{11} = \begin{pmatrix} 124.694 \\ 126.132 \\ 18.059 \\ 13.356 \\ 18.157 \\ 0.347 \\ -41.773 \end{pmatrix} psi \quad v_{11} = \begin{pmatrix} 12.931 \\ 1.741 \\ 3.446 \\ 19.712 \\ 0.864 \\ 4.94 \\ 82.724 \end{pmatrix} ft\,sec^{-1}$$

Results----------

$h_{P11} = 289\,ft$ $\mu(\rho, t_C) = 1.197\,cP$ $L_{i_{F_K}} = 12\,ft$ $L_{j_{F_K}} = 552\,ft$

$P_2 = 124.7\,psi$ $v_1 = 12.9\,ft\,sec^{-1}$ $A_P \cdot v_1 = 297.9\,gpm$ $D_{Di} = 2.067\,in$

$P_3 = 126.1\,psi$ $F_{D3} \cdot v_3 = 1.7\,ft\,sec^{-1}$ $F_{D3} \cdot A_P \cdot v_3 = 40.1\,gpm$

$P_5 = 18.1\,psi$ $v_5 = 3.4\,ft\,sec^{-1}$ $A_{S6}(F_K) \cdot v_5 = 206.2\,gpm$

$P_6 = 13.4\,psi$ $F_{D6} \cdot v_6 = 19.7\,ft\,sec^{-1}$ $F_{D6} \cdot A_f(D_{Di}) \cdot v_6 = 206.2\,gpm$

$P_8 = 18.2\,psi$ $v_8 = 0.9\,ft\,sec^{-1}$ $A_{S6}(F_K) \cdot v_8 = 51.7\,gpm$

$P_9 = 0.3\,psi$ $F_{D9} \cdot v_9 = 4.9\,ft\,sec^{-1}$ $F_{D9} \cdot A_f(D_{Di}) \cdot v_9 = 51.7\,gpm$

$P_{crack} = -41.8\,psi$ $v_1 \cdot A_P = F_{D3} \cdot A_P \cdot v_3 + A_{S6}(F_K) \cdot v_5 + A_{S6}(F_K) \cdot v_8 = 297.9\,gpm$

(continuity check at break, OK)

$v_{crack} = 82.7\,ft\,sec^{-1}$

$R_e(D_{H_crack}(L_c, W_c), v_{crack}, \rho, \mu(\rho, t_C)) = 1 \times 10^5$

$P_2 - P_5 = 106.635\,psi$

**CH2MHILL Hanford Group, Inc.**

**EVALUATION ANALYSIS**

Calc. No. RPP-LJJ-005
Revision: 0
Page No. 17 of 31

Client: CH2M Hill Hanford Group, Inc.
Subject: Secondary Encasement Pipe Pressure Due to Primary Pipe Break in Waste Tank Cross-Site Transfer Piping System
Location: 200 Area - Hanford Site, Richland, Washington

WO/Job No. _____
Date: 9/12/2001 By: L. J. Julyk
Checked: 9/25/01 By: R. H. Moore
Revised: _____ By: _____

**Case 1 (X10)**

**SY-101 New Transfer Pump** (RPP-5667 Rev. 0B)
(Canned Motor Westinghouse Pump Model 2A-513-A1)

Input==========

$L_o = 339\,ft$ $\quad H = 7\,ft$ $\quad \varepsilon_P = 2\,mil$

$\boxed{L_S = 5635\,ft}$ $\quad \rho = 1.3\,\frac{kg}{liter}$ $\quad Z = 0\,ft$ $\quad \varepsilon_S = 5\,mil$ $\quad D_{LDo_{F_K}} = 0.31\,in$ $\quad F_K = 1$

$L_P = 51015\,ft$ $\quad F_{D3} = 1$ $\quad \varepsilon_D = 5\,mil$ $\quad L_c = 10\,in$

$\boxed{x_B := 0 \cdot ft + L_o}$ $\quad t_C = 60\ ^{\circ}C$ $\quad D_{Di} = 2.067\,in$ $\quad \Delta Z_D = -1\,ft$ $\quad L_D(D_{Di}, F_K) = 21.086\,ft$ $\quad W_c = 0.1\,in$

$F_{D6} := 1$ $\quad F_{D9} := 0$ $\quad J(F_K, L_o, x_B) = 0$ $\quad N(F_K, L_o, L_S, x_B) = 10$ $\quad \varepsilon_c = 1\,mil$

$I(F_K, L_o, x_B) = 0$ $\quad M(F_K, L_o, L_S, x_B) = 460$

$$\begin{pmatrix} h_{P10} \\ P_{10} \\ v_{10} \end{pmatrix} := ff(L_o, H_o, L_S, H_S, x_B, \rho, t_C, \varepsilon_P, \varepsilon_S, \varepsilon_D, D_{Di}, F_K, F_{D3}, F_{D6}, F_{D9}, \Delta Z_D, L_P, H, Z, L_c, W_c, \varepsilon_c, H_{P10}, p_{10}, V_{10})$$

$$\begin{pmatrix} P_2 \\ P_3 \\ P_5 \\ P_6 \\ P_8 \\ P_9 \\ P_{crack} \end{pmatrix} := P_{10} \qquad \begin{pmatrix} v_1 \\ v_3 \\ v_5 \\ v_6 \\ v_8 \\ v_9 \\ v_{crack} \end{pmatrix} := v_{10}$$

Results----------

$h_{P10} = 297\,ft$ $\quad \mu(\rho, t_C) = 1.197\,cP$ $\quad L_{i_{F_K}} = 12\,ft$ $\quad L_{j_{F_K}} = 552\,ft$

$P_2 = 129.8\,psi$ $\quad v_1 = 12.7\,ft\,sec^{-1}$ $\quad A_P \cdot v_1 = 293.7\,gpm$ $\quad D_{Di} = 2.067\,in$

$P_3 = 131.2\,psi$ $\quad F_{D3} \cdot v_3 = 1.8\,ft\,sec^{-1}$ $\quad F_{D3} \cdot A_P \cdot v_3 = 41\,gpm$

$P_5 = 27.3\,psi$ $\quad v_5 = 4.2\,ft\,sec^{-1}$ $\quad A_{S6}(F_K) \cdot v_5 = 252.7\,gpm$

$P_6 = 20.3\,psi$ $\quad F_{D6} \cdot v_6 = 24.2\,ft\,sec^{-1}$ $\quad F_{D6} \cdot A_f(D_{Di}) \cdot v_6 = 252.7\,gpm$

$P_8 = 27.5\,psi$ $\quad v_8 = 0\,ft\,sec^{-1}$ $\quad A_{S6}(F_K) \cdot v_8 = 0\,gpm$

$P_9 = 17.9\,psi$ $\quad F_{D9} \cdot v_9 = 0\,ft\,sec^{-1}$ $\quad F_{D9} \cdot A_f(D_{Di}) \cdot v_9 = 0\,gpm$

$P_{crack} = -30.1\,psi$ $\quad v_1 \cdot A_P = F_{D3} \cdot A_P \cdot v_3 + A_{S6}(F_K) \cdot v_5 + A_{S6}(F_K) \cdot v_8 = 293.7\,gpm$

(continuity check at break, OK)

$v_{crack} = 81.1\,ft\,sec^{-1}$

$R_e(D_{H_crack}(L_c, W_c), v_{crack}, \rho, \mu(\rho, t_C)) = 1 \times 10^5$

$P_2 - P_5 = 102.437\,psi$

**CH2MHILL Hanford Group, Inc.**

**EVALUATION ANALYSIS**

Calc. No. RPP-LJJ-005
Revision: 0
Page No. 18 of 31

Client: CH2M Hill Hanford Group, Inc.
Subject: Secondary Encasement Pipe Pressure Due to Primary Pipe Break in Waste Tank Cross-Site Transfer Piping System
Location: 200 Area - Hanford Site, Richland, Washington

WO/Job No. _____
Date: 9/12/2001 By: L. J. Julyk
Checked: 9/25/01 By: [signature]
Revised: _____ By: _____

**Case 1 (X01)**

Input==========

**SY-101 New Transfer Pump** (RPP-5667 Rev. 0B)
(Canned Motor Westinghouse Pump Model 2A-513-A1)

$L_o = 339\,ft$ $\quad H = 7\,ft$ $\quad \varepsilon_P = 2\,mil$

$\boxed{L_S = 5635\,ft}$ $\quad \rho = 1.3\,\frac{kg}{liter}$ $\quad Z = 0\,ft$ $\quad \varepsilon_S = 5\,mil$ $\quad D_{LDo_{F_K}} = 0.31\,in$ $\quad F_K = 1$

$L_P = 51015\,ft$ $\quad F_{D3} = 1$ $\quad \varepsilon_D = 5\,mil$

$\boxed{x_B := 0 \cdot ft + L_o}$ $\quad t_C = 60\ ^\circ C$ $\quad D_{Di} = 2.067\,in$ $\quad \Delta Z_D = -1\,ft$ $\quad L_D(D_{Di}, F_K) = 21.086\,ft$ $\quad L_c = 10\,in$

$W_c = 0.1\,in$

$F_{D6} := 0$ $\quad F_{D9} := 1$ $\quad J(F_K, L_o, x_B) = 0$ $\quad N(F_K, L_o, L_S, x_B) = 10$ $\quad \varepsilon_c = 1\,mil$

$I(F_K, L_o, x_B) = 0$ $\quad M(F_K, L_o, L_S, x_B) = 460$

$$\begin{pmatrix} h_{P01} \\ P_{01} \\ v_{01} \end{pmatrix} := ff(L_o, H_o, L_S, H_S, x_B, \rho, t_C, \varepsilon_P, \varepsilon_S, \varepsilon_D, D_{Di}, F_K, F_{D3}, F_{D6}, F_{D9}, \Delta Z_D, L_P, H, Z, L_c, W_c, \varepsilon_c, H_{P01}, p_{01}, V_{01})$$

$$\begin{pmatrix} P_2 \\ P_3 \\ P_5 \\ P_6 \\ P_8 \\ P_9 \\ P_{crack} \end{pmatrix} := P_{01} \quad \begin{pmatrix} v_1 \\ v_3 \\ v_5 \\ v_6 \\ v_8 \\ v_9 \\ v_{crack} \end{pmatrix} := v_{01}$$

Results----------

$h_{P01} = 396\,ft$ $\quad \mu(\rho, t_C) = 1.197\,cP$ $\quad L_{i_{F_K}} = 12\,ft$ $\quad L_{j_{F_K}} = 552\,ft$

$P_2 = 200\,psi$ $\quad v_1 = 9.8\,ft\,sec^{-1}$ $\quad A_P \cdot v_1 = 226.7\,gpm$ $\quad D_{Di} = 2.067\,in$

$P_3 = 200.8\,psi$ $\quad F_{D3} \cdot v_3 = 2.2\,ft\,sec^{-1}$ $\quad F_{D3} \cdot A_P \cdot v_3 = 51.8\,gpm$

$P_5 = 151.1\,psi$ $\quad v_5 = 0\,ft\,sec^{-1}$ $\quad A_{S6}(F_K) \cdot v_5 = 0\,gpm$

$P_6 = 121\,psi$ $\quad F_{D6} \cdot v_6 = 0\,ft\,sec^{-1}$ $\quad F_{D6} \cdot A_f(D_{Di}) \cdot v_6 = 0\,gpm$

$P_8 = 151\,psi$ $\quad v_8 = 2.9\,ft\,sec^{-1}$ $\quad A_{S6}(F_K) \cdot v_8 = 174.9\,gpm$

$P_9 = 9.5\,psi$ $\quad F_{D9} \cdot v_9 = 16.7\,ft\,sec^{-1}$ $\quad F_{D9} \cdot A_f(D_{Di}) \cdot v_9 = 174.9\,gpm$

$P_{crack} = 123.5\,psi$ $\quad v_1 \cdot A_P = F_{D3} \cdot A_P \cdot v_3 + A_{S6}(F_K) \cdot v_5 + A_{S6}(F_K) \cdot v_8 = 226.7\,gpm$

(continuity check at break, OK)

$v_{crack} = 56.1\,ft\,sec^{-1}$

$R_e(D_{H_crack}(L_c, W_c), v_{crack}, \rho, \mu(\rho, t_C)) = 9 \times 10^4$

$P_2 - P_5 = 48.869\,psi$

**CH2MHILL Hanford Group, Inc.**

**EVALUATION ANALYSIS**

Calc. No. RPP-LJJ-005
Revision: 0
Page No. 19 of 31

Client: CH2M Hill Hanford Group, Inc.
Subject: Secondary Encasement Pipe Pressure Due to Primary Pipe Break in Waste Tank Cross-Site Transfer Piping System
Location: 200 Area - Hanford Site, Richland, Washington

WO/Job No. _____
Date: 9/12/2001 By: L. J. Julyk
Checked: 9/25/01 By: [illegible]
Revised: _____ By: _____

**Figure 1b. Case 1: Maximum Pressure in Cross-Site Encasement Pipe Due to Primary Pipe Break (Between SY-A Valve Pit and Diversion Box) within Encasement Section of Length $L_s$ Starting at $L_o$ Relative to Transfer Pump for Supernate Waste Transfer at Temperature of 60 °C.**

$F_K = 1$ High point rupture disk $L_c = 10\,in$

$Z = 0\,ft$ $t_C = 60\,°C$ $\rho = 1.3\,\frac{kg}{liter}$ $\mu(\rho, t_C) = 1.197\,cP$ $D_{LDo_{F_K}} = 0.31\,in$ $D_{Di} = 2.067\,in$ $W_c = 0.1\,in$

$H = 6.72\,ft$ $L_o = 339\,ft$ $L_S = 5635\,ft$ $L_P = 51015\,ft$ $L_{i_{F_K}} = 12\,ft$ $\varepsilon_P = 2\,mil$ $L_D(D_{Di}, F_K) = 21.1\,ft$ $\varepsilon_c = 1\,mil$

$\Delta Z_D = -1\,ft$ $H_o = 2.58\,ft$ $H_S = 11.67\,ft$ $F_{D3} = 1$ $L_{j_{F_K}} = 552\,ft$ $\varepsilon_S = 5\,mil$ $\varepsilon_D = 5\,mil$

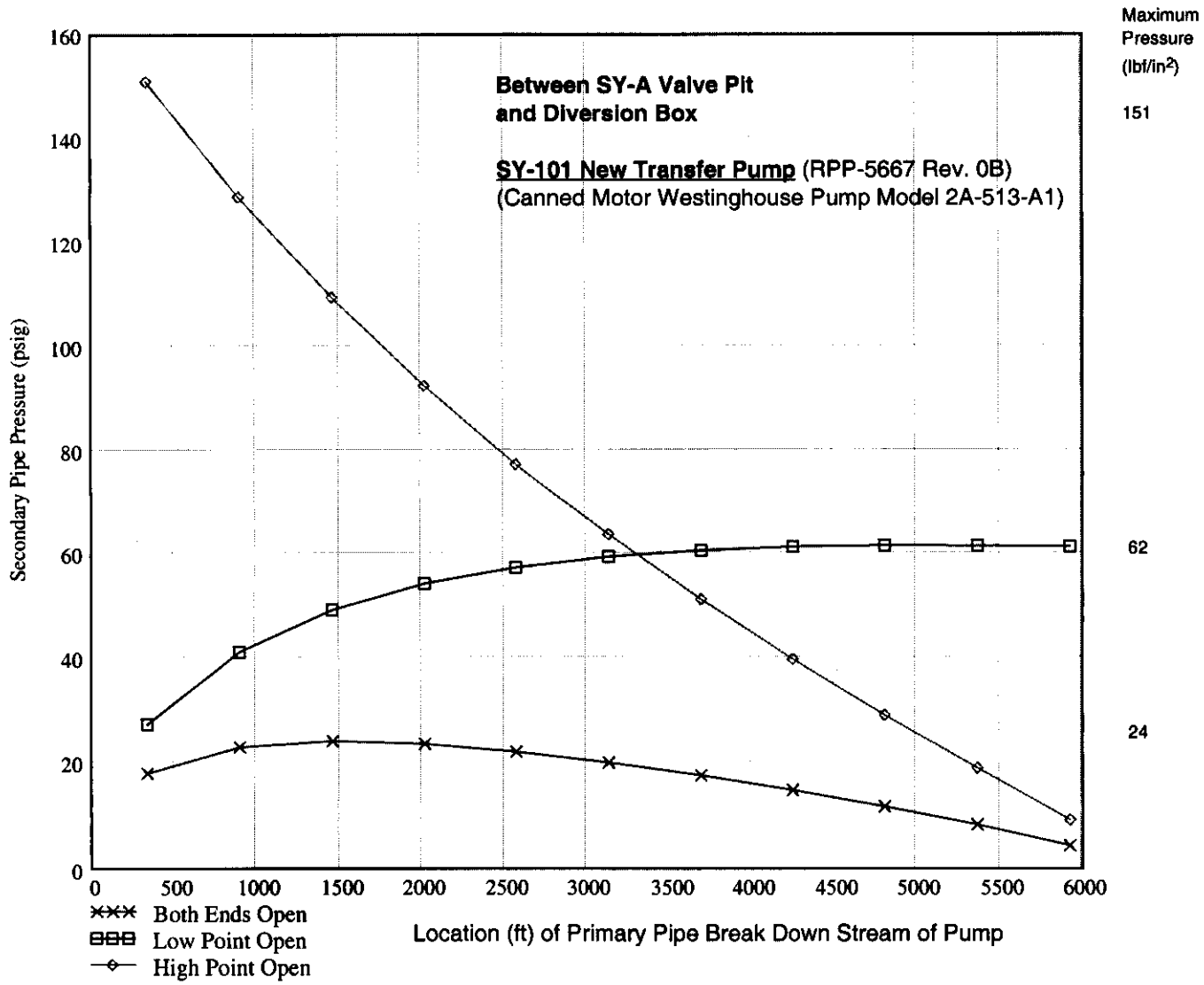

**CH2MHILL Hanford Group, Inc.**

**EVALUATION ANALYSIS**

Calc. No. RPP-LJJ-005
Revision: 0
Page No. 20 of 31

Client: CH2M Hill Hanford Group, Inc.
Subject: Secondary Encasement Pipe Pressure Due to Primary Pipe Break in Waste Tank Cross-Site Transfer Piping System
Location: 200 Area - Hanford Site, Richland, Washington

WO/Job No. _____
Date: 9/12/2001 By: L. J. Julyk
Checked: 9/25/01 By: [illegible]
Revised: _____ By: _____

**Supernate Transfer**

**Case 2 break between Diversion Box and Vent Station**

$L_o := L_{SY102_DB1out}$ $L_o = 6600\,ft$ start distance from pump of secondary encasement section under consideration

$H_o := Z_{DB1out} - Z_{SY102}$ $H_o = 11.8\,ft$ change in elevation of primary pipe from pump to point $L_o$

$L_S := L_{DB1out_VSin}$ $L_S = 13631\,ft$ length of secondary encasement section under consideration between drains

$H_S := Z_{VSin} - Z_{SY102}$ $H_S = 85.63\,ft$ change in elevation of primary pipe from pump to point $L_o + L_S$

Subcase X11 (low and high point drain, $F_{D6} = 1$ and $F_{D9} = 1$),
X10 (low point drain, FD6 = 1 and FD9 = 0),
X01 (high point drain, FD6 = 0 and FD9 = 1)

$D_{Di} = 2.067\,in$

**Initial guesses (X11)** $Q := 110.3 \cdot gpm$ $V_1 := \frac{Q}{A_P}$ $V_1 = 4.787\,\frac{ft}{sec}$ flow velocities

Both low and high point drains open

$F_K = 1$ $F_{D3} = 1$ $F_{D6} := 1$ $F_{D9} := 1$

$H_{P11} := H'_p(Q)$ pump head $H_{P11} = 510\,ft$

$p_2 := 28 \cdot psi$ primary pipe pressure just up stream of break

$p_3 := 28 \cdot psi$ primary pipe pressure just down stream of break

$p_5 := 18 \cdot psi$ secondary pipe pressure just up stream of break

$p_6 := 1 \cdot psi$ secondary pipe pressure at drain up stream of break

$p_8 := 18 \cdot psi$ secondary pipe pressure just down stream of break

$p_9 := 1 \cdot psi$ secondary pipe pressure at drain down stream of break

$V_5 := \frac{V_1 \cdot F_{D6} + \Delta V}{3.8}$

$V_6 := V_5 \cdot \frac{A_{S6}(F_K)}{A_f(D_{Di})}$ $\frac{A_{S6}(F_K)}{A_P} = 2.596$

$V_8 := \frac{V_1 \cdot F_{D9} + \Delta V}{80}$ $\frac{A_{S6}(F_K)}{A_f(D_{Di})} = 5.72$

$V_9 := V_8 \cdot \frac{A_{S6}(F_K)}{A_f(D_{Di})}$

$p_c := 12 \cdot psi$ apply conservation of mass (continuity) at break

$V_3 := V_1 - \frac{A_{S6}(F_K)}{A_P} \cdot (V_5 + V_8)$ $V_3 = 1.29\,\frac{ft}{sec}$

$V_c := \frac{A_{S6}(F_K)}{A_{crack}(L_c, W_c)} \cdot (V_5 + V_8)$ $V_c = 25.9\,\frac{ft}{sec}$

$p_{11} := (p_2\ p_3\ p_5\ p_6\ p_8\ p_9\ p_c)^T$ $V_{11} := (V_1\ V_3\ V_5\ V_6\ V_8\ V_9\ V_c)^T$

**CH2MHILL Hanford Group, Inc.**

**EVALUATION ANALYSIS**

Calc. No. RPP-LJJ-005
Revision: 0
Page No. 21 of 31

Client: CH2M Hill Hanford Group, Inc. WO/Job No. _____
Subject: Secondary Encasement Pipe Pressure Due to Primary Pipe Break in Waste Tank Cross-Site Transfer Piping System
Date: 9/12/2001 By: L. J. Julyk
Checked: 9/25/01 By: R. Schlosser
Revised: _____ By: _____
Location: 200 Area - Hanford Site, Richland, Washington

**Initial guesses (X10)** $Q := 161 \cdot gpm$ $V_1 := \frac{Q}{A_P}$ $V_1 = 6.987 \frac{ft}{sec}$ flow velocities

Low point drain open

$F_K = 1$ $F_{D3} = 1$ $F_{D6} := 1$ $F_{D9} := 0$

$H_{P10} := H'_p(Q)$ pump head $H_{P10} = 470\,ft$

$p_2 := 62 \cdot psi$ *primary pipe pressure just up stream of break*

$p_3 := 62 \cdot psi$ primary pipe pressure just down stream of break

$p_5 := 39 \cdot psi$ secondary pipe pressure just up stream of break

$p_6 := 5 \cdot psi$ secondary pipe pressure at drain up stream of break

$p_8 := 39 \cdot psi$ secondary pipe pressure just down stream of break

$p_9 := 1 \cdot psi$ secondary pipe pressure at drain down stream of break

$V_5 := \frac{V_1 \cdot F_{D6} + \Delta V}{3.07}$

$V_6 := V_5 \cdot \frac{A_{S6}(F_K)}{A_f(D_{Di})}$ $\frac{A_{S6}(F_K)}{A_P} = 2.596$

$V_8 := \frac{V_1 \cdot F_{D9} + \Delta V}{50}$ $\frac{A_{S6}(F_K)}{A_f(D_{Di})} = 5.72$

$V_9 := V_8 \cdot \frac{A_{S6}(F_K)}{A_f(D_{Di})}$

$p_c := 26 \cdot psi$ apply conservation of mass (continuity) at break

$V_3 := V_1 - \frac{A_{S6}(F_K)}{A_P} \cdot (V_5 + V_8)$ $V_3 = 0.99 \frac{ft}{sec}$

$V_c := \frac{A_{S6}(F_K)}{A_{crack}(L_c, W_c)} \cdot (V_5 + V_8)$ $V_c = 44.3 \frac{ft}{sec}$

$p_{10} := (p_2\ p_3\ p_5\ p_6\ p_8\ p_9\ p_c)^T$ $V_{10} := (V_1\ V_3\ V_5\ V_6\ V_8\ V_9\ V_c)^T$

**Initial guesses (X01)** $Q := 110 \cdot gpm$ $V_1 := \frac{Q}{A_P}$ $V_1 = 4.774 \frac{ft}{sec}$ flow velocities

High point drain open

$F_K = 1$ $F_{D3} = 1$ $F_{D6} := 0$ $F_{D9} := 1$

$H_{P01} := H'_p(Q)$ pump head $H_{P01} = 510\,ft$

$p_2 := 125 \cdot psi$ primary pipe pressure just up stream of break

$p_3 := 125 \cdot psi$ primary pipe pressure just down stream of break

$p_5 := 120 \cdot psi$ secondary pipe pressure just up stream of break

$p_6 := 112 \cdot psi$ secondary pipe pressure at drain up stream of break

$p_8 := 120 \cdot psi$ secondary pipe pressure just down stream of break

$p_9 := 1 \cdot psi$ secondary pipe pressure at drain down stream of break

$V_5 := \frac{V_1 \cdot F_{D6} + \Delta V}{3}$

$V_6 := V_5 \cdot \frac{A_{S6}(F_K)}{A_f(D_{Di})}$ $\frac{A_{S6}(F_K)}{A_P} = 2.596$

$V_8 := \frac{V_1 \cdot F_{D9} + \Delta V}{4.5}$ $\frac{A_{S6}(F_K)}{A_f(D_{Di})} = 5.72$

$V_9 := V_8 \cdot \frac{A_{S6}(F_K)}{A_f(D_{Di})}$

$p_c := 118 \cdot psi$ apply conservation of mass (continuity) at break

$V_3 := V_1 - \frac{A_{S6}(F_K)}{A_P} \cdot (V_5 + V_8)$ $V_3 = 1.88 \frac{ft}{sec}$

$V_c := \frac{A_{S6}(F_K)}{A_{crack}(L_c, W_c)} \cdot (V_5 + V_8)$ $V_c = 21.4 \frac{ft}{sec}$

$p_{01} := (p_2\ p_3\ p_5\ p_6\ p_8\ p_9\ p_c)^T$ $V_{01} := (V_1\ V_3\ V_5\ V_6\ V_8\ V_9\ V_c)^T$

0 1 2 3 4 5 6 0 1 2 3 4 5 6

**CH2MHILL Hanford Group, Inc.**

**EVALUATION ANALYSIS**

Calc. No. RPP-LJJ-005
Revision: 0
Page No. 22 of 31

Client: CH2M Hill Hanford Group, Inc.
Subject: Secondary Encasement Pipe Pressure Due to Primary Pipe Break in Waste Tank Cross-Site Transfer Piping System
Location: 200 Area - Hanford Site, Richland, Washington

WO/Job No. _____
Date: 9/12/2001 By: L. J. Julyk
Checked: 9/25/01 By: R. Schlosser
Revised: _____ By: _____

**Case 2 (X11)**

**SY-101 New Transfer Pump** (RPP-5667 Rev. 0B)
(Canned Motor Westinghouse Pump Model 2A-513-A1)

Input==========

$L_o = 6600\,ft$ $\quad H = 7\,ft$ $\quad \varepsilon_P = 2\,mil$

$L_S = 13631\,ft$ $\quad \rho = 1.3\,\frac{kg}{liter}$ $\quad Z = 0\,ft$ $\quad \varepsilon_S = 5\,mil$ $\quad D_{LDo_{F_K}} = 0.31\,in$ $\quad F_K = 1$

$L_P = 51015\,ft$ $\quad F_{D3} = 1$ $\quad \varepsilon_D = 5\,mil$ $\quad L_c = 10\,in$

$x_B := 7300 \cdot ft + L_o$ $\quad t_C = 60\ ^\circ C$ $\quad D_{Di} = 2.067\,in$ $\quad \Delta Z_D = -1\,ft$ $\quad L_D(D_{Di}, F_K) = 21.086\,ft$ $\quad W_c = 0.1\,in$

$F_{D6} := 1$ $\quad F_{D9} := 1$ $\quad J(F_K, L_o, x_B) = 13$ $\quad N(F_K, L_o, L_S, x_B) = 11$ $\quad \varepsilon_c = 1\,mil$

$I(F_K, L_o, x_B) = 595$ $\quad M(F_K, L_o, L_S, x_B) = 517$

$$\begin{pmatrix} h_{P11} \\ P_{11} \\ v_{11} \end{pmatrix} := ff(L_o, H_o, L_S, H_S, x_B, \rho, t_C, \varepsilon_P, \varepsilon_S, \varepsilon_D, D_{Di}, F_K, F_{D3}, F_{D6}, F_{D9}, \Delta Z_D, L_P, H, Z, L_c, W_c, \varepsilon_c, H_{P11}, p_{11}, V_{11})$$

$$\begin{pmatrix} P_2 \\ P_3 \\ P_5 \\ P_6 \\ P_8 \\ P_9 \\ P_{crack} \end{pmatrix} := P_{11} \quad \begin{pmatrix} v_1 \\ v_3 \\ v_5 \\ v_6 \\ v_8 \\ v_9 \\ v_{crack} \end{pmatrix} := v_{11} \qquad P_{11} = \begin{pmatrix} 29.275 \\ 29.464 \\ 18.746 \\ 1.655 \\ 18.762 \\ -0.564 \\ 12.82 \end{pmatrix} psi \quad v_{11} = \begin{pmatrix} 4.835 \\ 1.319 \\ 1.361 \\ 7.784 \\ -5.911 \times 10^{-5} \\ -1.83 \times 10^{-7} \\ 26.047 \end{pmatrix} ft\,sec^{-1}$$

Results----------

$h_{P11} = 509\,ft$ $\quad \mu(\rho, t_C) = 1.197\,cP$ $\quad L_{i_{F_K}} = 12\,ft$ $\quad L_{j_{F_K}} = 552\,ft$

$P_2 = 29.3\,psi$ $\quad v_1 = 4.8\,ft\,sec^{-1}$ $\quad A_P \cdot v_1 = 111.4\,gpm$ $\quad D_{Di} = 2.067\,in$

$P_3 = 29.5\,psi$ $\quad F_{D3} \cdot v_3 = 1.3\,ft\,sec^{-1}$ $\quad F_{D3} \cdot A_P \cdot v_3 = 30.4\,gpm$

$P_5 = 18.7\,psi$ $\quad v_5 = 1.4\,ft\,sec^{-1}$ $\quad A_{S6}(F_K) \cdot v_5 = 81.4\,gpm$

$P_6 = 1.7\,psi$ $\quad F_{D6} \cdot v_6 = 7.8\,ft\,sec^{-1}$ $\quad F_{D6} \cdot A_f(D_{Di}) \cdot v_6 = 81.4\,gpm$

$P_8 = 18.8\,psi$ $\quad v_8 = -5.9 \times 10^{-5}\,ft\,sec^{-1}$ $\quad A_{S6}(F_K) \cdot v_8 = -3.5 \times 10^{-3}\,gpm$

$P_9 = -0.6\,psi$ $\quad F_{D9} \cdot v_9 = -1.8 \times 10^{-7}\,ft\,sec^{-1}$ $\quad F_{D9} \cdot A_f(D_{Di}) \cdot v_9 = -1.9 \times 10^{-6}\,gpm$

$P_{crack} = 12.8\,psi$ $\quad v_1 \cdot A_P = F_{D3} \cdot A_P \cdot v_3 + A_{S6}(F_K) \cdot v_5 + A_{S6}(F_K) \cdot v_8 = 111.8\,gpm$

(continuity check at break, OK)

$v_{crack} = 26\,ft\,sec^{-1}$

$R_e(D_{H_crack}(L_c, W_c), v_{crack}, \rho, \mu(\rho, t_C)) = 4 \times 10^4$

$P_2 - P_5 = 10.529\,psi$

**CH2MHILL Hanford Group, Inc.**

**EVALUATION ANALYSIS**

Calc. No. RPP-LJJ-005
Revision: 0
Page No. 23 of 31

Client: CH2M Hill Hanford Group, Inc.
Subject: Secondary Encasement Pipe Pressure Due to Primary Pipe Break in Waste Tank Cross-Site Transfer Piping System
Location: 200 Area - Hanford Site, Richland, Washington

WO/Job No. _____
Date: 9/12/2001 By: L. J. Julyk
Checked: 9/25/01 By: R. H. Clemmer
Revised: _____ By: _____

**Case 2 (X10)**

**SY-101 New Transfer Pump** (RPP-5667 Rev. 0B)
(Canned Motor Westinghouse Pump Model 2A-513-A1)

Input==========

$L_o = 6600\,ft$ $\quad H = 7\,ft$ $\quad \varepsilon_P = 2\,mil$

$\boxed{L_S = 13631\,ft}$ $\quad \rho = 1.3\,\frac{kg}{liter}$ $\quad Z = 0\,ft$ $\quad \varepsilon_S = 5\,mil$ $\quad D_{LDo_{F_K}} = 0.31\,in$ $\quad F_K = 1$

$L_P = 51015\,ft$ $\quad F_{D3} = 1$ $\quad \varepsilon_D = 5\,mil$ $\quad L_c = 10\,in$

$\boxed{x_B := 7500 \cdot ft + L_o}$ $\quad t_C = 60\,°C$ $\quad D_{Di} = 2.067\,in$ $\quad \Delta Z_D = -1\,ft$ $\quad L_D(D_{Di}, F_K) = 21.086\,ft$ $\quad W_c = 0.1\,in$

$F_{D6} := 1$ $\quad F_{D9} := 0$ $\quad J(F_K, L_o, x_B) = 14$ $\quad N(F_K, L_o, L_S, x_B) = 11$ $\quad \varepsilon_c = 1\,mil$

$I(F_K, L_o, x_B) = 611$ $\quad M(F_K, L_o, L_S, x_B) = 500$

$$\begin{pmatrix} h_{P10} \\ P_{10} \\ v_{10} \end{pmatrix} := ff(L_o, H_o, L_S, H_S, x_B, \rho, t_C, \varepsilon_P, \varepsilon_S, \varepsilon_D, D_{Di}, F_K, F_{D3}, F_{D6}, F_{D9}, \Delta Z_D, L_P, H, Z, L_c, W_c, \varepsilon_c, H_{P10}, p_{10}, V_{10})$$

$$\begin{pmatrix} P_2 \\ P_3 \\ P_5 \\ P_6 \\ P_8 \\ P_9 \\ P_{crack} \end{pmatrix} := P_{10} \quad \begin{pmatrix} v_1 \\ v_3 \\ v_5 \\ v_6 \\ v_8 \\ v_9 \\ v_{crack} \end{pmatrix} := v_{10} \qquad P_{10} = \begin{pmatrix} 28.645 \\ 28.832 \\ 18.354 \\ 1.602 \\ 18.37 \\ -0.385 \\ 12.561 \end{pmatrix} psi \quad v_{10} = \begin{pmatrix} 4.802 \\ 1.323 \\ 1.344 \\ 7.688 \\ 0 \\ 2.131 \\ 25.754 \end{pmatrix} ft\,sec^{-1}$$

Results----------

$h_{P10} = 510\,ft$ $\quad \mu(\rho, t_C) = 1.197\,cP$ $\quad L_{i_{F_K}} = 12\,ft$ $\quad L_{j_{F_K}} = 552\,ft$

$P_2 = 28.6\,psi$ $\quad v_1 = 4.8\,ft\,sec^{-1}$ $\quad A_P \cdot v_1 = 110.6\,gpm$ $\quad D_{Di} = 2.067\,in$

$P_3 = 28.8\,psi$ $\quad F_{D3} \cdot v_3 = 1.3\,ft\,sec^{-1}$ $\quad F_{D3} \cdot A_P \cdot v_3 = 30.5\,gpm$

$P_5 = 18.4\,psi$ $\quad v_5 = 1.3\,ft\,sec^{-1}$ $\quad A_{S6}(F_K) \cdot v_5 = 80.4\,gpm$

$P_6 = 1.6\,psi$ $\quad F_{D6} \cdot v_6 = 7.7\,ft\,sec^{-1}$ $\quad F_{D6} \cdot A_f(D_{Di}) \cdot v_6 = 80.4\,gpm$

$P_8 = 18.4\,psi$ $\quad v_8 = 0\,ft\,sec^{-1}$ $\quad A_{S6}(F_K) \cdot v_8 = 0\,gpm$

$P_9 = -0.4\,psi$ $\quad F_{D9} \cdot v_9 = 0\,ft\,sec^{-1}$ $\quad F_{D9} \cdot A_f(D_{Di}) \cdot v_9 = 0\,gpm$

$P_{crack} = 12.6\,psi$ $\quad v_1 \cdot A_P = F_{D3} \cdot A_P \cdot v_3 + A_{S6}(F_K) \cdot v_5 + A_{S6}(F_K) \cdot v_8 = 110.9\,gpm$

(continuity check at break, OK)

$v_{crack} = 25.8\,ft\,sec^{-1}$

$R_e(D_{H_crack}(L_c, W_c), v_{crack}, \rho, \mu(\rho, t_C)) = 4 \times 10^4$

$P_2 - P_5 = 10.291\,psi$

**CH2MHILL Hanford Group, Inc.**

**EVALUATION ANALYSIS**

Calc. No. RPP-LJJ-005
Revision: 0
Page No. 24 of 31

Client: CH2M Hill Hanford Group, Inc.
Subject: Secondary Encasement Pipe Pressure Due to Primary Pipe Break in Waste Tank Cross-Site Transfer Piping System
Location: 200 Area - Hanford Site, Richland, Washington

WO/Job No.
Date: 9/12/2001 By: L. J. Julyk
Checked: 9/25/01 By: R. Kellogg
Revised: By:

**Case 2 (X01)**

Input==========

**SY-101 New Transfer Pump** (RPP-5667 Rev. 0B)
(Canned Motor Westinghouse Pump Model 2A-513-A1)

$L_o = 6600\,ft$ $\quad H = 7\,ft$ $\quad \varepsilon_P = 2\,mil$

$L_S = 13631\,ft$ $\quad \rho = 1.3\,\frac{kg}{liter}$ $\quad Z = 0\,ft$ $\quad \varepsilon_S = 5\,mil$ $\quad D_{LDo_{F_K}} = 0.31\,in$ $\quad F_K = 1$

$L_P = 51015\,ft$ $\quad F_{D3} = 1$ $\quad \varepsilon_D = 5\,mil$

$x_B := 0 \cdot ft + L_o$ $\quad t_C = 60\ ^\circ C$ $\quad D_{Di} = 2.067\,in$ $\quad \Delta Z_D = -1\,ft$ $\quad L_D(D_{Di}, F_K) = 21.086\,ft$ $\quad L_c = 10\,in$

$W_c = 0.1\,in$

$F_{D6} := 0$ $\quad F_{D9} := 1$ $\quad J(F_K, L_o, x_B) = 0$ $\quad N(F_K, L_o, L_S, x_B) = 25$ $\quad \varepsilon_c = 1\,mil$

$I(F_K, L_o, x_B) = 0$ $\quad M(F_K, L_o, L_S, x_B) = 1111$

$$\begin{pmatrix} h_{P01} \\ P_{01} \\ v_{01} \end{pmatrix} := ff(L_o, H_o, L_S, H_S, x_B, \rho, t_C, \varepsilon_P, \varepsilon_S, \varepsilon_D, D_{Di}, F_K, F_{D3}, F_{D6}, F_{D9}, \Delta Z_D, L_P, H, Z, L_c, W_c, \varepsilon_c, H_{P01}, p_{01}, V_{01})$$

$$\begin{pmatrix} P_2 \\ P_3 \\ P_5 \\ P_6 \\ P_8 \\ P_9 \\ P_{crack} \end{pmatrix} := P_{01} \quad \begin{pmatrix} v_1 \\ v_3 \\ v_5 \\ v_6 \\ v_8 \\ v_9 \\ v_{crack} \end{pmatrix} := v_{01} \qquad P_{01} = \begin{pmatrix} 131.139 \\ 131.378 \\ 120.092 \\ 96.187 \\ 120.075 \\ 1.765 \\ 113.815 \end{pmatrix} psi \quad v_{01} = \begin{pmatrix} 5.575 \\ 1.954 \\ 0 \\ 52.243 \\ 1.395 \\ 7.978 \\ 26.77 \end{pmatrix} ft\,sec^{-1}$$

Results----------

$h_{P01} = 497\,ft$ $\quad \mu(\rho, t_C) = 1.197\,cP$ $\quad L_{i_{F_K}} = 12\,ft$ $\quad L_{j_{F_K}} = 552\,ft$

$P_2 = 131.1\,psi$ $\quad v_1 = 5.6\,ft\,sec^{-1}$ $\quad A_P \cdot v_1 = 128.5\,gpm$ $\quad D_{Di} = 2.067\,in$

$P_3 = 131.4\,psi$ $\quad F_{D3} \cdot v_3 = 2\,ft\,sec^{-1}$ $\quad F_{D3} \cdot A_P \cdot v_3 = 45\,gpm$

$P_5 = 120.1\,psi$ $\quad v_5 = 0\,ft\,sec^{-1}$ $\quad A_{S6}(F_K) \cdot v_5 = 0\,gpm$

$P_6 = 96.2\,psi$ $\quad F_{D6} \cdot v_6 = 0\,ft\,sec^{-1}$ $\quad F_{D6} \cdot A_f(D_{Di}) \cdot v_6 = 0\,gpm$

$P_8 = 120.1\,psi$ $\quad v_8 = 1.4\,ft\,sec^{-1}$ $\quad A_{S6}(F_K) \cdot v_8 = 83.4\,gpm$

$P_9 = 1.8\,psi$ $\quad F_{D9} \cdot v_9 = 8\,ft\,sec^{-1}$ $\quad F_{D9} \cdot A_f(D_{Di}) \cdot v_9 = 83.4\,gpm$

$P_{crack} = 113.8\,psi$ $\quad v_1 \cdot A_P = F_{D3} \cdot A_P \cdot v_3 + A_{S6}(F_K) \cdot v_5 + A_{S6}(F_K) \cdot v_8 = 128.5\,gpm$

(continuity check at break, OK)

$v_{crack} = 26.8\,ft\,sec^{-1}$

$R_e(D_{H_crack}(L_c, W_c), v_{crack}, \rho, \mu(\rho, t_C)) = 4 \times 10^4$

$P_2 - P_5 = 11.048\,psi$

**CH2MHILL Hanford Group, Inc.**

**EVALUATION ANALYSIS**

Calc. No. RPP-LJJ-005
Revision: 0
Page No. 25 of 31

Client: CH2M Hill Hanford Group, Inc.
Subject: Secondary Encasement Pipe Pressure Due to Primary Pipe Break in Waste Tank Cross-Site Transfer Piping System
Location: 200 Area - Hanford Site, Richland, Washington

WO/Job No. _____
Date: 9/12/2001 By: L. J. Julyk
Checked: 9/25/01 By: [illegible]
Revised: _____ By: _____

**Figure 1c. Case 2: Maximum Pressure in Cross-Site Encasement Pipe Due to Primary Pipe Break (Between Diversion Box and Vent Station) within Encasement Section of Length $L_s$ Starting at $L_o$ Relative to Transfer Pump for Supernate Waste Transfer at Temperature of 60 °C.**

$F_K = 1$

$Z = 0\,ft$ $t_C = 60\ °C$ $\rho = 1.3\frac{kg}{liter}$ $\mu(\rho, t_C) = 1.197\,cP$ $D_{LDo_{F_K}} = 0.31\,in$ $D_{Di} = 2.067\,in$ $L_c = 10\,in$

$H = 6.72\,ft$ $L_o = 6600\,ft$ $L_S = 13631\,ft$ $L_P = 51015\,ft$ $L_{i_{F_K}} = 12\,ft$ $\varepsilon_P = 2\,mil$ $L_D(D_{Di}, F_K) = 21.1\,ft$ $W_c = 0.1\,in$

$\Delta Z_D = -1\,ft$ $H_o = 11.8\,ft$ $H_S = 85.63\,ft$ $F_{D3} = 1$ $L_{j_{F_K}} = 552\,ft$ $\varepsilon_S = 5\,mil$ $\varepsilon_D = 5\,mil$ $\varepsilon_c = 1\,mil$

Low and high point rupture disk

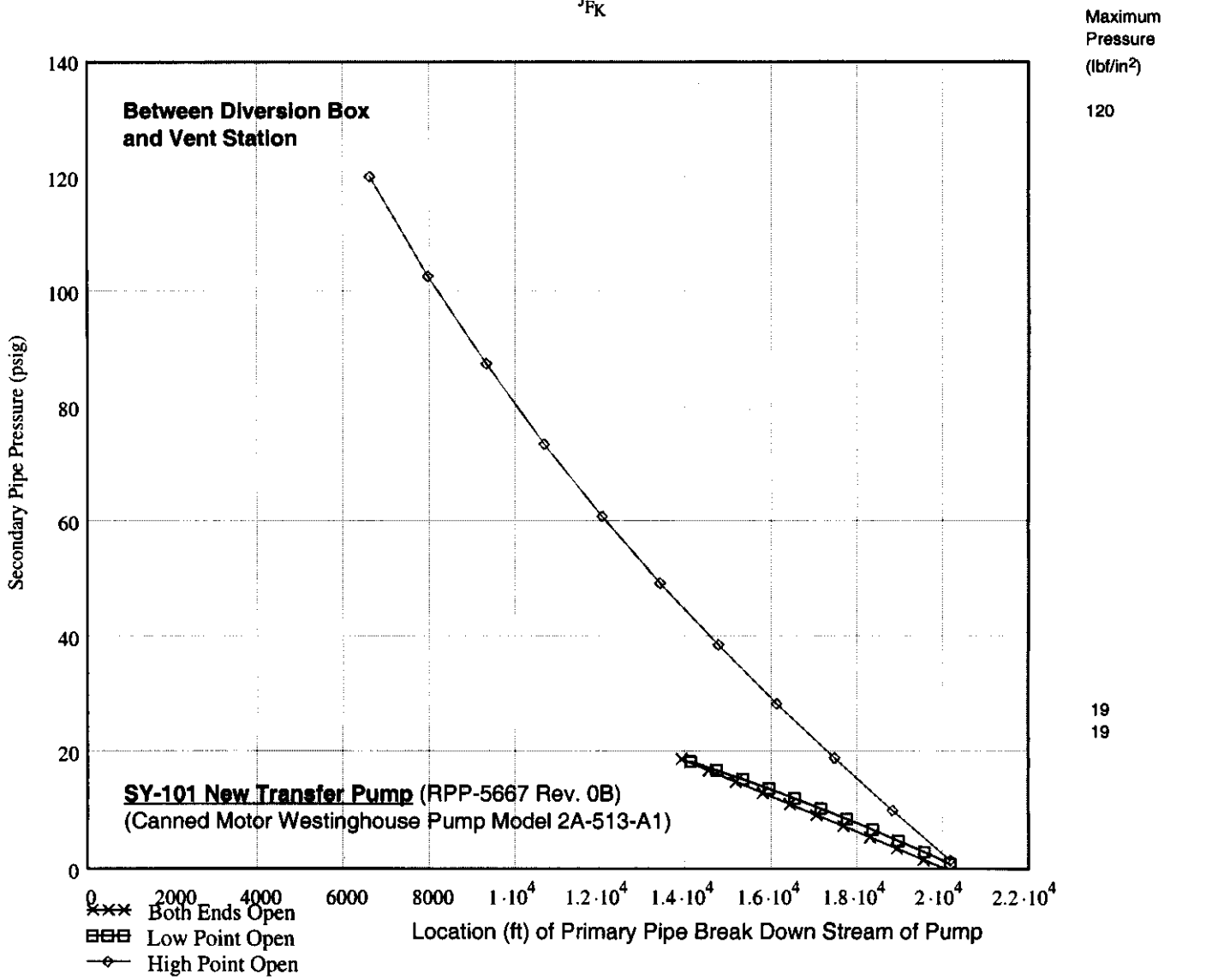

**CH2MHILL Hanford Group, Inc.**

**EVALUATION ANALYSIS**

Calc. No. RPP-LJJ-005
Revision: 0
Page No. 26 of 31

Client: CH2M Hill Hanford Group, Inc.
Subject: Secondary Encasement Pipe Pressure Due to Primary Pipe Break in Waste Tank Cross-Site Transfer Piping System
Location: 200 Area - Hanford Site, Richland, Washington

WO/Job No. _____
Date: 9/12/2001 By: L. J. Julyk
Checked: 9/25/01 By: [illegible]
Revised: _____ By: _____

**Supernate Transfer**

**Case 3 break between Vent Station and 244A Lift Station)**

| | | |
|---|---|---|
| $L_o := L_{SY102_VSout}$ | $L_o = 20362\,ft$ | start distance from pump of secondary encasement section under consideration |
| $H_o := Z_{VSout} - Z_{SY102}$ | $H_o = 85.63\,ft$ | change in elevation of primary pipe from pump to point $L_o$ |
| $L_S := L_{VSout_244Ain}$ | $L_S = 22425\,ft$ | length of secondary encasement section under consideration between drains |
| $H_S := Z_{244Ain} - Z_{SY102}$ | $H_S = 10.88\,ft$ | change in elevation of primary pipe from pump to point $L_o + L_S$ |

Subcase X11 (low and high point drain, $F_{D6} = 1$ and $F_{D9} = 1$)*,
X10 (high point drain, FD6 = 1 and FD9 = 0),
X01 (low point drain, FD6 = 0 and FD9 = 1)*

$D_{Di} = 2.067\,in$

**Initial guesses (X11)** $Q := 88.9 \cdot gpm$ $V_1 := \frac{Q}{A_P}$ $V_1 = 3.858\,\frac{ft}{sec}$ flow velocities

Both low and high point drains open

$F_K = 1$ $F_{D3} = 1$ $F_{D6} := 1$ $F_{D9} := 1$

$H_{P11} := H'_p(Q)$ pump head $H_{P11} = 522\,ft$

$p_2 := 8 \cdot psi$ primary pipe pressure just up stream of break

$p_3 := 8 \cdot psi$ primary pipe pressure just down stream of break

$p_5 := 3 \cdot psi$ secondary pipe pressure just up stream of break

$p_6 := 1 \cdot psi$ secondary pipe pressure at drain up stream of break

$p_8 := 3 \cdot psi$ secondary pipe pressure just down stream of break

$p_9 := 1 \cdot psi$ secondary pipe pressure at drain down stream of break

$V_5 := \frac{V_1 \cdot F_{D6} + \Delta V}{35}$

$V_6 := V_5 \cdot \frac{A_{S6}(F_K)}{A_f(D_{Di})}$ $\frac{A_{S6}(F_K)}{A_P} = 2.596$

$V_8 := \frac{V_1 \cdot F_{D9} + \Delta V}{5}$ $\frac{A_{S6}(F_K)}{A_f(D_{Di})} = 5.72$

$V_9 := V_8 \cdot \frac{A_{S6}(F_K)}{A_f(D_{Di})}$

$p_c := 1 \cdot psi$

apply conservation of mass (continuity) at break

$V_3 := V_1 - \frac{A_{S6}(F_K)}{A_P} \cdot (V_5 + V_8)$ $V_3 = 1.51\,\frac{ft}{sec}$

$V_c := \frac{A_{S6}(F_K)}{A_{crack}(L_c, W_c)} \cdot (V_5 + V_8)$ $V_c = 17.4\,\frac{ft}{sec}$

$p_{11} := (p_2\ p_3\ p_5\ p_6\ p_8\ p_9\ p_c)^T$ $V_{11} := (V_1\ V_3\ V_5\ V_6\ V_8\ V_9\ V_c)^T$

**CH2MHILL Hanford Group, Inc.**

**EVALUATION ANALYSIS**

Calc. No. RPP-LJJ-005
Revision: 0
Page No. 27 of 31

Client: CH2M Hill Hanford Group, Inc. WO/Job No. _____
Subject: Secondary Encasement Pipe Pressure Due to Primary Pipe Break in Waste Tank Cross-Site Transfer Piping System
Date: 9/12/2001 By: L. J. Julyk
Checked: 9/25/01 By: R. Schlosser
Revised: _____ By: _____
Location: 200 Area - Hanford Site, Richland, Washington

**Initial guesses (X10)** $Q := 83.2 \cdot gpm$ $V_1 := \frac{Q}{A_P}$ $V_1 = 3.611 \frac{ft}{sec}$ flow velocities

High point drain open

$F_K = 1$ $F_{D3} = 1$ $F_{D6} := 1$ $F_{D9} := 0$

$H_{P10} := H'_p(Q)$ pump head $H_{P10} = 525\,ft$

$p_2 := 20 \cdot psi$ primary pipe pressure just up stream of break

$p_3 := 20 \cdot psi$ primary pipe pressure just down stream of break

$p_5 := 16 \cdot psi$ secondary pipe pressure just up stream of break

$p_6 := 1 \cdot psi$ secondary pipe pressure at drain up stream of break

$p_8 := 16 \cdot psi$ secondary pipe pressure just down stream of break

$p_9 := 40 \cdot psi$ secondary pipe pressure at drain down stream of break

$V_5 := \frac{V_1 \cdot F_{D6} + \Delta V}{5}$

$V_6 := V_5 \cdot \frac{A_{S6}(F_K)}{A_f(D_{Di})}$ $\frac{A_{S6}(F_K)}{A_P} = 2.596$

$V_8 := \frac{V_1 \cdot F_{D9} + \Delta V}{3.8}$ $\frac{A_{S6}(F_K)}{A_f(D_{Di})} = 5.72$

$V_9 := V_8 \cdot \frac{A_{S6}(F_K)}{A_f(D_{Di})}$

$p_c := 14 \cdot psi$

apply conservation of mass (continuity) at break

$V_3 := V_1 - \frac{A_{S6}(F_K)}{A_P} \cdot (V_5 + V_8)$ $V_3 = 1.62 \frac{ft}{sec}$

$V_c := \frac{A_{S6}(F_K)}{A_{crack}(L_c, W_c)} \cdot (V_5 + V_8)$ $V_c = 14.7 \frac{ft}{sec}$

$$p_{10} := \begin{array}{c} (p_2 \;\; p_3 \;\; p_5 \;\; p_6 \;\; p_8 \;\; p_9 \;\; p_c)^T \\ 0 \;\; 1 \;\; 2 \;\; 3 \;\; 4 \;\; 5 \;\; 6 \end{array} \qquad V_{10} := \begin{array}{c} (V_1 \;\; V_3 \;\; V_5 \;\; V_6 \;\; V_8 \;\; V_9 \;\; V_c)^T \\ 0 \;\; 1 \;\; 2 \;\; 3 \;\; 4 \;\; 5 \;\; 6 \end{array}$$

**Initial guesses (X01)** $Q := 86 \cdot gpm$ $V_1 := \frac{Q}{A_P}$ $V_1 = 3.732 \frac{ft}{sec}$ flow velocities

High point drain open

$F_K = 1$ $F_{D3} = 1$ $F_{D6} := 0$ $F_{D9} := 1$

$H_{P01} := H'_p(Q)$ pump head $H_{P01} = 524\,ft$

$p_2 := 11 \cdot psi$ primary pipe pressure just up stream of break

$p_3 := 11 \cdot psi$ primary pipe pressure just down stream of break

$p_5 := 7 \cdot psi$ secondary pipe pressure just up stream of break

$p_6 := 1 \cdot psi$ secondary pipe pressure at drain up stream of break

$p_8 := 7 \cdot psi$ secondary pipe pressure just down stream of break

$p_9 := 1 \cdot psi$ secondary pipe pressure at drain down stream of break

$V_5 := \frac{V_1 \cdot F_{D6} + \Delta V}{3}$

$V_6 := V_5 \cdot \frac{A_{S6}(F_K)}{A_f(D_{Di})}$ $\frac{A_{S6}(F_K)}{A_P} = 2.596$

$V_8 := \frac{V_1 \cdot F_{D9} + \Delta V}{4.5}$ $\frac{A_{S6}(F_K)}{A_f(D_{Di})} = 5.72$

$V_9 := V_8 \cdot \frac{A_{S6}(F_K)}{A_f(D_{Di})}$

$p_c := 5 \cdot psi$

apply conservation of mass (continuity) at break

$V_3 := V_1 - \frac{A_{S6}(F_K)}{A_P} \cdot (V_5 + V_8)$ $V_3 = 1.43 \frac{ft}{sec}$

$V_c := \frac{A_{S6}(F_K)}{A_{crack}(L_c, W_c)} \cdot (V_5 + V_8)$ $V_c = 17 \frac{ft}{sec}$

$$p_{01} := \begin{array}{c} (p_2 \;\; p_3 \;\; p_5 \;\; p_6 \;\; p_8 \;\; p_9 \;\; p_c)^T \\ 0 \;\; 1 \;\; 2 \;\; 3 \;\; 4 \;\; 5 \;\; 6 \end{array} \qquad V_{01} := \begin{array}{c} (V_1 \;\; V_3 \;\; V_5 \;\; V_6 \;\; V_8 \;\; V_9 \;\; V_c)^T \\ 0 \;\; 1 \;\; 2 \;\; 3 \;\; 4 \;\; 5 \;\; 6 \end{array}$$

**CH2MHILL Hanford Group, Inc.**

**EVALUATION ANALYSIS**

Calc. No. RPP-LJJ-005
Revision: 0
Page No. 28 of 31

Client: CH2M Hill Hanford Group, Inc.
Subject: Secondary Encasement Pipe Pressure Due to Primary Pipe Break in Waste Tank Cross-Site Transfer Piping System
Location: 200 Area - Hanford Site, Richland, Washington

WO/Job No. _____
Date: 9/12/2001 By: L. J. Julyk
Checked: 9/25/01 By: R. Gallegos
Revised: _____ By: _____

**Case 3 (X11)**

**SY-101 New Transfer Pump** (RPP-5667 Rev. 0B)
(Canned Motor Westinghouse Pump Model 2A-513-A1)

Input==========

$L_o = 20362\,ft$ $H = 7\,ft$ $\varepsilon_P = 2\,mil$

$L_S = 22425\,ft$ $\rho = 1.3\,\frac{kg}{liter}$ $Z = 0\,ft$ $\varepsilon_S = 5\,mil$ $D_{LDo_{F_K}} = 0.31\,in$ $F_K = 1$

$L_P = 51015\,ft$ $F_{D3} = 1$ $\varepsilon_D = 5\,mil$ $L_c = 10\,in$

$x_B := L_S - 18400 \cdot ft + L_o$ $D_{Di} = 2.067\,in$ $\Delta Z_D = -1\,ft$ $L_D(D_{Di}, F_K) = 21.086\,ft$ $W_c = 0.1\,in$

$t_C = 60\,°C$ $F_{D6} := 1$ $F_{D9} := 1$ $J(F_K, L_o, x_B) = 7$ $N(F_K, L_o, L_S, x_B) = 33$ $\varepsilon_c = 1\,mil$

$I(F_K, L_o, x_B) = 328$ $M(F_K, L_o, L_S, x_B) = 1500$

$$\begin{pmatrix} h_{P11} \\ P_{11} \\ v_{11} \end{pmatrix} := ff(L_o, H_o, L_S, H_S, x_B, \rho, t_C, \varepsilon_P, \varepsilon_S, \varepsilon_D, D_{Di}, F_K, F_{D3}, F_{D6}, F_{D9}, \Delta Z_D, L_P, H, Z, L_c, W_c, \varepsilon_c, H_{P11}, p_{11}, V_{11})$$

$$\begin{pmatrix} P_2 \\ P_3 \\ P_5 \\ P_6 \\ P_8 \\ P_9 \\ P_{crack} \end{pmatrix} := P_{11} \quad \begin{pmatrix} v_1 \\ v_3 \\ v_5 \\ v_6 \\ v_8 \\ v_9 \\ v_{crack} \end{pmatrix} := v_{11} \qquad P_{11} = \begin{pmatrix} 11.223 \\ 11.325 \\ 6.998 \\ -0.564 \\ 6.991 \\ 0.357 \\ 4.59 \end{pmatrix} psi \quad v_{11} = \begin{pmatrix} 3.711 \\ 1.478 \\ -7.636 \times 10^{-5} \\ -2.33 \times 10^{-7} \\ 0.868 \\ 4.968 \\ 16.582 \end{pmatrix} ft\,sec^{-1}$$

Results----------

$h_{P11} = 524\,ft$ $\mu(\rho, t_C) = 1.197\,cP$ $L_{i_{F_K}} = 12\,ft$ $L_{j_{F_K}} = 552\,ft$

$P_2 = 11.2\,psi$ $v_1 = 3.7\,ft\,sec^{-1}$ $A_P \cdot v_1 = 85.5\,gpm$ $D_{Di} = 2.067\,in$

$P_3 = 11.3\,psi$ $F_{D3} \cdot v_3 = 1.5\,ft\,sec^{-1}$ $F_{D3} \cdot A_P \cdot v_3 = 34.1\,gpm$

$P_5 = 7\,psi$ $v_5 = -7.6 \times 10^{-5}\,ft\,sec^{-1}$ $A_{S6}(F_K) \cdot v_5 = -4.6 \times 10^{-3}\,gpm$

$P_6 = -0.6\,psi$ $F_{D6} \cdot v_6 = -2.3 \times 10^{-7}\,ft\,sec^{-1}$ $A_f(D_{Di}) \cdot v_6 = -2.4 \times 10^{-6}\,gpm$

$P_8 = 7\,psi$ $v_8 = 0.9\,ft\,sec^{-1}$ $A_{S6}(F_K) \cdot v_8 = 52\,gpm$

$P_9 = 0.4\,psi$ $F_{D9} \cdot v_9 = 5\,ft\,sec^{-1}$ $F_{D9} \cdot A_f(D_{Di}) \cdot v_9 = 52\,gpm$

$P_{crack} = 4.6\,psi$ $v_1 \cdot A_P = F_{D3} \cdot A_P \cdot v_3 + A_{S6}(F_K) \cdot v_5 + A_{S6}(F_K) \cdot v_8 = 86\,gpm$

(continuity check at break, OK)

$v_{crack} = 16.6\,ft\,sec^{-1}$

$R_e(D_{H_crack}(L_c, W_c), v_{crack}, \rho, \mu(\rho, t_C)) = 3 \times 10^4$

$P_2 - P_5 = 4.225\,psi$

**CH2MHILL Hanford Group, Inc.**

**EVALUATION ANALYSIS**

Calc. No. RPP-LJJ-005
Revision: 0
Page No. 29 of 31

Client: CH2M Hill Hanford Group, Inc.
Subject: Secondary Encasement Pipe Pressure Due to Primary Pipe Break in Waste Tank Cross-Site Transfer Piping System
Location: 200 Area - Hanford Site, Richland, Washington

WO/Job No. _____
Date: 9/12/2001 By: L. J. Julyk
Checked: 9/25/01 By: R. Gallegos
Revised: _____ By: _____

**Case 3 (X10)**

Input==========

**SY-101 New Transfer Pump** (RPP-5667 Rev. 0B)
(Canned Motor Westinghouse Pump Model 2A-513-A1)

$L_o = 20362\,ft$ $H = 7\,ft$ $\varepsilon_P = 2\,mil$

$L_S = 22425\,ft$ $\rho = 1.3\,\frac{kg}{liter}$ $Z = 0\,ft$ $\varepsilon_S = 5\,mil$ $D_{LDo_{F_K}} = 0.31\,in$ $F_K = 1$

$L_P = 51015\,ft$ $F_{D3} = 1$ $\varepsilon_D = 5\,mil$ $L_c = 10\,in$

$x_B := L_S - 10000 \cdot ft + L_o$ $D_{Di} = 2.067\,in$ $\Delta Z_D = -1\,ft$ $L_D(D_{Di}, F_K) = 21.086\,ft$ $W_c = 0.1\,in$

$t_C = 60\,°C$ $F_{D6} := 1$ $F_{D9} := 0$ $J(F_K, L_o, x_B) = 23$ $N(F_K, L_o, L_S, x_B) = 18$ $\varepsilon_c = 1\,mil$

$I(F_K, L_o, x_B) = 1.012 \times 10^3$ $L_o, L_S, x_B) = 815$

$$\begin{pmatrix} h_{P10} \\ P_{10} \\ v_{10} \end{pmatrix} := ff(L_o, H_o, L_S, H_S, x_B, \rho, t_C, \varepsilon_P, \varepsilon_S, \varepsilon_D, D_{Di}, F_K, F_{D3}, F_{D6}, F_{D9}, \Delta Z_D, L_P, H, Z, L_c, W_c, \varepsilon_c, H_{P10}, p_{10}, V_{10})$$

$$\begin{pmatrix} P_2 \\ P_3 \\ P_5 \\ P_6 \\ P_8 \\ P_9 \\ P_{crack} \end{pmatrix} := P_{10} \quad \begin{pmatrix} v_1 \\ v_3 \\ v_5 \\ v_6 \\ v_8 \\ v_9 \\ v_{crack} \end{pmatrix} := v_{10} \qquad P_{10} = \begin{pmatrix} 32.874 \\ 32.928 \\ 31.675 \\ -0.285 \\ 31.677 \\ 40.383 \\ 30.967 \end{pmatrix} psi \quad v_{10} = \begin{pmatrix} 3.152 \\ 1.934 \\ 0.469 \\ 2.684 \\ 0 \\ 33.926 \\ 9.007 \end{pmatrix} ft\,sec^{-1}$$

Results----------

$h_{P10} = 530\,ft$ $\mu(\rho, t_C) = 1.197\,cP$ $L_{i_{F_K}} = 12\,ft$ $L_{j_{F_K}} = 552\,ft$

$P_2 = 32.9\,psi$ $v_1 = 3.2\,ft\,sec^{-1}$ $A_P \cdot v_1 = 72.6\,gpm$ $D_{Di} = 2.067\,in$

$P_3 = 32.9\,psi$ $F_{D3} \cdot v_3 = 1.9\,ft\,sec^{-1}$ $F_{D3} \cdot A_P \cdot v_3 = 44.6\,gpm$

$P_5 = 31.7\,psi$ $v_5 = 0.5\,ft\,sec^{-1}$ $A_{S6}(F_K) \cdot v_5 = 28.1\,gpm$

$P_6 = -0.3\,psi$ $F_{D6} \cdot v_6 = 2.7\,ft\,sec^{-1}$ $F_{D6} \cdot A_f(D_{Di}) \cdot v_6 = 28.1\,gpm$

$P_8 = 31.7\,psi$ $v_8 = 0\,ft\,sec^{-1}$ $A_{S6}(F_K) \cdot v_8 = 0\,gpm$

$P_9 = 40.4\,psi$ $F_{D9} \cdot v_9 = 0\,ft\,sec^{-1}$ $F_{D9} \cdot A_f(D_{Di}) \cdot v_9 = 0\,gpm$

$P_{crack} = 31\,psi$ $v_1 \cdot A_P = F_{D3} \cdot A_P \cdot v_3 + A_{S6}(F_K) \cdot v_5 + A_{S6}(F_K) \cdot v_8 = 72.6\,gpm$

(continuity check at break, OK)

$v_{crack} = 9\,ft\,sec^{-1}$

$R_e(D_{H_crack}(L_c, W_c), v_{crack}, \rho, \mu(\rho, t_C)) = 1 \times 10^4$

$P_2 - P_5 = 1.199\,psi$

**CH2MHILL Hanford Group, Inc.**

**EVALUATION ANALYSIS**

Calc. No. RPP-LJJ-005
Revision: 0
Page No. 30 of 31

Client: CH2M Hill Hanford Group, Inc.
Subject: Secondary Encasement Pipe Pressure Due to Primary Pipe Break in Waste Tank Cross-Site Transfer Piping System
Location: 200 Area - Hanford Site, Richland, Washington

WO/Job No. _____
Date: 9/12/2001 By: L. J. Julyk
Checked: 9/25/01 By: [signature]
Revised: _____ By: _____

**Case 3 (X01)**

Input==========

**SY-101 New Transfer Pump** (RPP-5667 Rev. 0B)
(Canned Motor Westinghouse Pump Model 2A-513-A1)

$L_o = 20362\,ft$ $\quad H = 7\,ft$ $\quad \varepsilon_P = 2\,mil$

$\boxed{L_S = 22425\,ft}$ $\quad \rho = 1.3\,\frac{kg}{liter}$ $\quad Z = 0\,ft$ $\quad \varepsilon_S = 5\,mil$ $\quad D_{LDo_{F_K}} = 0.31\,in$ $\quad F_K = 1$

$L_P = 51015\,ft$ $\quad F_{D3} = 1$ $\quad \varepsilon_D = 5\,mil$ $\quad L_c = 10\,in$

$\boxed{x_B := L_S - 22425 \cdot ft + L_c}$ $\quad D_{Di} = 2.067\,in$ $\quad \Delta Z_D = -1\,ft$ $\quad L_D(D_{Di}, F_K) = 21.086\,ft$ $\quad W_c = 0.1\,in$

$t_C = 60\ ^{\circ}C$ $\quad F_{D6} := 0$ $\quad F_{D9} := 1$ $\quad J(F_K, L_o, x_B) = 0$ $\quad N(F_K, L_o, L_S, x_B) = 41$ $\quad \varepsilon_c = 1\,mil$

$I(F_K, L_o, x_B) = 0$ $\quad M(F_K, L_o, L_S, x_B) = 1828$

$$\begin{pmatrix} h_{P01} \\ P_{01} \\ v_{01} \end{pmatrix} := ff(L_o, H_o, L_S, H_S, x_B, \rho, t_C, \varepsilon_P, \varepsilon_S, \varepsilon_D, D_{Di}, F_K, F_{D3}, F_{D6}, F_{D9}, \Delta Z_D, L_P, H, Z, L_c, W_c, \varepsilon_c, H_{P01}, p_{01}, V_{01})$$

$$\begin{pmatrix} P_2 \\ P_3 \\ P_5 \\ P_6 \\ P_8 \\ P_9 \\ P_{crack} \end{pmatrix} := P_{01} \quad \begin{pmatrix} v_1 \\ v_3 \\ v_5 \\ v_6 \\ v_8 \\ v_9 \\ v_{crack} \end{pmatrix} := v_{01} \qquad P_{01} = \begin{pmatrix} 17.974 \\ 18.088 \\ 13.289 \\ 10.572 \\ 13.282 \\ 0.444 \\ 10.618 \end{pmatrix} psi \quad v_{01} = \begin{pmatrix} 3.94 \\ 1.578 \\ 0 \\ 17.614 \\ 0.91 \\ 5.204 \\ 17.464 \end{pmatrix} ft\,sec^{-1}$$

Results----------

$h_{P01} = 521\,ft$ $\quad \mu(\rho, t_C) = 1.197\,cP$ $\quad L_{i_{F_K}} = 12\,ft$ $\quad L_{j_{F_K}} = 552\,ft$

$P_2 = 18\,psi$ $\quad v_1 = 3.9\,ft\,sec^{-1}$ $\quad A_P \cdot v_1 = 90.8\,gpm$ $\quad D_{Di} = 2.067\,in$

$P_3 = 18.1\,psi$ $\quad F_{D3} \cdot v_3 = 1.6\,ft\,sec^{-1}$ $\quad F_{D3} \cdot A_P \cdot v_3 = 36.4\,gpm$

$P_5 = 13.3\,psi$ $\quad v_5 = 0\,ft\,sec^{-1}$ $\quad A_{S6}(F_K) \cdot v_5 = 0\,gpm$

$P_6 = 10.6\,psi$ $\quad F_{D6} \cdot v_6 = 0\,ft\,sec^{-1}$ $\quad F_{D6} \cdot A_f(D_{Di}) \cdot v_6 = 0\,gpm$

$P_8 = 13.3\,psi$ $\quad v_8 = 0.9\,ft\,sec^{-1}$ $\quad A_{S6}(F_K) \cdot v_8 = 54.4\,gpm$

$P_9 = 0.4\,psi$ $\quad F_{D9} \cdot v_9 = 5.2\,ft\,sec^{-1}$ $\quad F_{D9} \cdot A_f(D_{Di}) \cdot v_9 = 54.4\,gpm$

$P_{crack} = 10.6\,psi$ $\quad v_1 \cdot A_P = F_{D3} \cdot A_P \cdot v_3 + A_{S6}(F_K) \cdot v_5 + A_{S6}(F_K) \cdot v_8 = 90.8\,gpm$

(continuity check at break, OK)

$v_{crack} = 17.5\,ft\,sec^{-1}$

$R_e(D_{H_crack}(L_c, W_c), v_{crack}, \rho, \mu(\rho, t_C)) = 3 \times 10^4$

$P_2 - P_5 = 4.685\,psi$

**CH2MHILL Hanford Group, Inc.**

**EVALUATION ANALYSIS**

Calc. No. RPP-LJJ-005
Revision: 0
Page No. 31 of 31

Client: CH2M Hill Hanford Group, Inc.
Subject: Secondary Encasement Pipe Pressure Due to Primary Pipe Break in Waste Tank Cross-Site Transfer Piping System
Location: 200 Area - Hanford Site, Richland, Washington

WO/Job No. _____
Date: 9/12/2001 By: L. J. Julyk
Checked: 9/25/01 By: R. L. Blanchard
Revised: _____ By: _____

**Figure 1d. Case 3: Maximum Pressure in Cross-Site Encasement Pipe Due to Primary Pipe Break (Between Vent Station and 244A Lift Station) within Encasement Section of Length $L_s$ Starting at $L_o$ Relative to Transfer Pump for Supernate Waste Transfer at Temperature of 60 °C.**

$F_K = 1$ High point rupture disk $L_c = 10\,in$

$Z = 0\,ft$ $t_C = 60\ ^{\circ}C$ $\rho = 1.3\,\frac{kg}{liter}$ $\mu(\rho, t_C) = 1.197\,cP$ $D_{LDo_{F_K}} = 0.31\,in$ $D_{Di} = 2.067\,in$ $W_c = 0.1\,in$

$H = 6.72\,ft$ $L_o = 20362\,ft$ $L_S = 22425\,ft$ $L_P = 51015\,ft$ $L_{i_{F_K}} = 12\,ft$ $\varepsilon_P = 2\,mil$ $L_D(D_{Di}, F_K) = 21.1\,ft$ $\varepsilon_c = 1\,mil$

$\Delta Z_D = -1\,ft$ $H_o = 85.63\,ft$ $H_S = 10.88\,ft$ $F_{D3} = 1$ $L_{j_{F_K}} = 552\,ft$ $\varepsilon_S = 5\,mil$ $\varepsilon_D = 5\,mil$

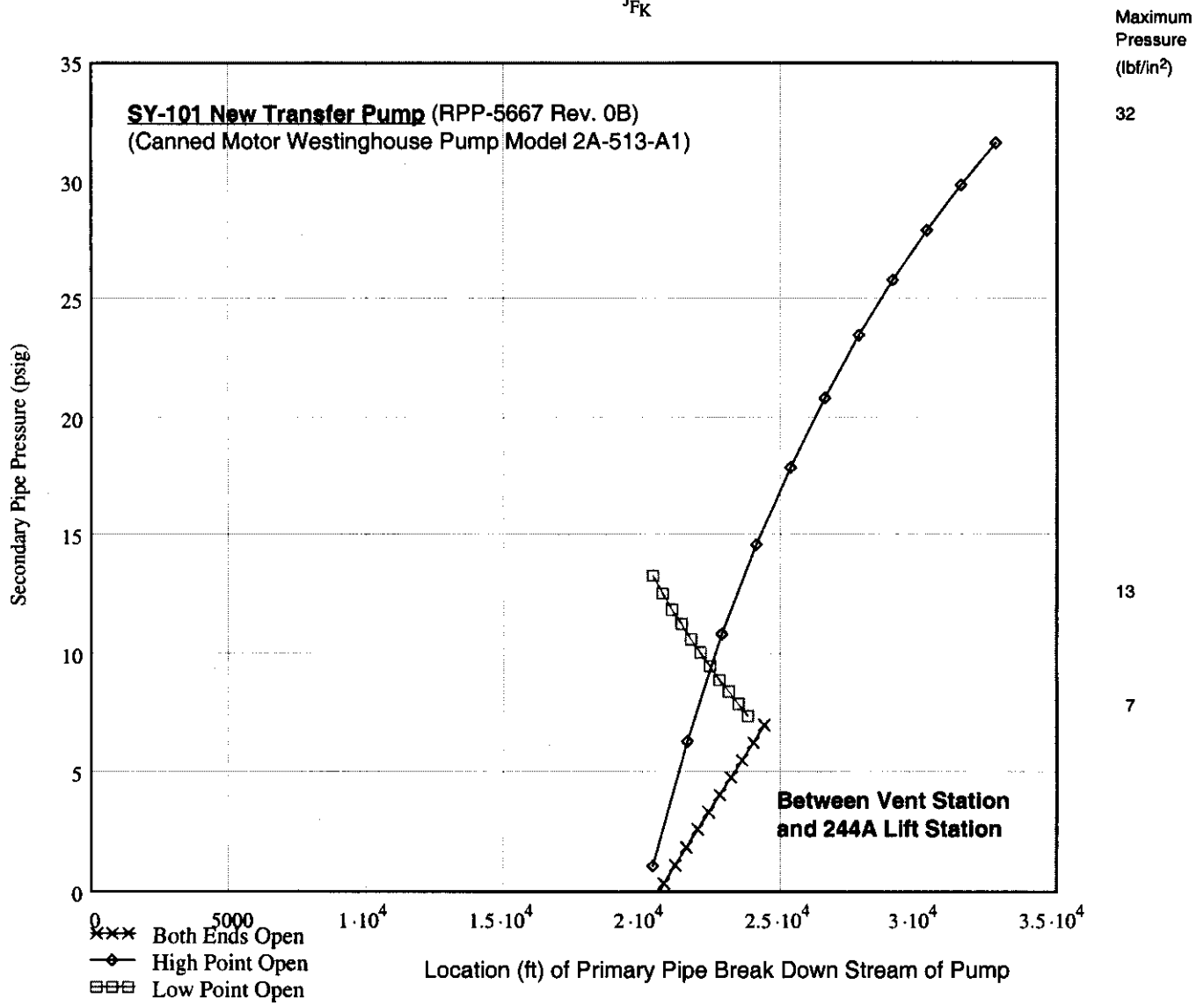

This page intentionally left blank

# APPENDIX C

# INFRASTRUCTURE ENCASEMENT PIPE MAXIMUM PRESSURE ANALYSIS

This page intentionally left blank

# APPENDIX C0

# INFRASTRUCTURE ENCASEMENT PIPE MAXIMUM PRESSURE ANALYSIS

# BLOCKED TRANSFER ROUTE

This page intentionally left blank

**CH2MHILL Hanford Group, Inc.**

**EVALUATION ANALYSIS**

Calc. No. RPP-LJJ-005
Revision: 0
Page No. 1 of 22

Client: CH2M Hill Hanford Group, Inc.
Subject: Secondary Encasement Pipe Pressure Due to Primary Pipe Break in Waste Tank Cross-Site Transfer Piping System
Location: 200 Area - Hanford Site, Richland, Washington

WO/Job No. _____
Date: 9/12/2001 By: L. J. Julyk
Checked: 9/25/01 By: R. Schlosser
Revised: _____ By: _____

Reference:C:\WINDOWS\Desktop\FY2001\Waste Transfer System\Encasement Pressure Issue\Cross-Site Encasement Calcs\pipebreak.r

**Input Parameter Data**

**AW105 to WTP Elevation and Equivalent Pipe Length Parameters**

Elevations

$Z_{AW105.05A} := 684.5 \cdot ft$ elevation at AW105 05A Transfer Pump Pit

$Z_{AWA} := 685.35 \cdot ft$ elevation at AWA

$Z_{AW102.02A} := 684.5 \cdot ft$ elevation at AW102 02A

$Z_{APpit} := 676.61 \cdot ft$ elevation at AP pit

$Z_{APApit} := 674 \cdot ft$ elevation at AP-A pit (new)

$Z_{WTPinterface} := 662.4 \cdot ft$ elevation at WTP interface

$Z_{WTP} := 707.44 \cdot ft$ elevation at WTP in-plant

Equivalent pipe length between points

$L_{AW105.05A_AWA} := (108 + 240) \cdot ft$

$L_{AWA_AW102.02A} := (205 + 124) \cdot ft$

$L_{AW102.02A_APpit} := (205 + 761) \cdot ft$

$L_{APpit_APApit} := (205 + 450) \cdot ft$

$L_{APApit_WTPinterface} := (205 + 3518 - 1000) \cdot ft$

$L_{WTPinterface_WTP} := (884) \cdot ft$

$L_{W105.05A_AW102.02A} := L_{AW105.05A_AWA} + L_{AWA_AW102.02A}$ $\quad L_{W105.05A_AW102.02A} = 677\,ft$

$L_{W105.05A_APpit} := L_{W105.05A_AW102.02A} + L_{AW102.02A_APpit}$ $\quad L_{W105.05A_APpit} = 1643\,ft$

$L_{W105.05A_APApit} := L_{W105.05A_APpit} + L_{APpit_APApit}$ $\quad L_{W105.05A_APApit} = 2298\,ft$

$L_{W105.05A_WTPinterface} := L_{W105.05A_APApit} + L_{APApit_WTPinterface}$ $\quad L_{W105.05A_WTPinterface} = 5021\,ft$

$L_P := L_{W105.05A_WTPinterface} + L_{WTPinterface_WTP}$ $\quad L_P = 5905\,ft$

$$Z_{AW_tank_bottom} := \left(631.5 + \frac{3}{8} \cdot \frac{1}{12} + \frac{8}{12} + \frac{0.5}{12}\right) \cdot ft \qquad Z_{AW_full} := Z_{AW_tank_bottom} + 422 \cdot in \qquad \text{(H-2-70394)}$$

$\Delta H_{pump} := Z_{AW105.05A} - Z_{AW_full}$

$\Delta H_{pump} = 17.094\,ft$

**CH2MHILL Hanford Group, Inc.**

**EVALUATION ANALYSIS**

Calc. No. RPP-LJJ-005
Revision: 0
Page No. 2 of 22

Client: CH2M Hill Hanford Group, Inc.
Subject: Secondary Encasement Pipe Pressure Due to Primary Pipe Break in Waste Tank Cross-Site Transfer Piping System
Location: 200 Area - Hanford Site, Richland, Washington

WO/Job No. _____
Date: 9/12/2001 By: L. J. Julyk
Checked: 9/25/01 By: R. Sellers
Revised: _____ By: _____

**AW105 to WTP Cases**

**assume all drains 1-1/2-in. to bound other transfer routes**

Case 0 break between AW105 05A and AWA

$L_O := 0 \cdot ft$ $\quad L_O = 0\,ft$

$H_O := 0 \cdot ft$ $\quad H_O = 0\,ft$

$L_S := L_{AW105.05A_AWA}$ $\quad L_S = 348\,ft$

$H_S := Z_{AWA} - Z_{AW105.05A}$ $\quad H_S = 0.85\,ft$

Subcase X11 (low and high point drain, $F_{D6} = 1$ and $F_{D9} = 1$)*,
X10 (low point drain, FD6 = 1 and FD9 = 0),
X01 (high point drain, FD6 = 0 and FD9 = 1)*
2-in.drain low point drain

Case 1 break between AWA and AW102 02A

$L_O := L_{AW105.05A_AWA}$ $\quad L_O = 348\,ft$

$H_O := Z_{AWA} - Z_{AW105.05A}$ $\quad H_O = 0.85\,ft$

$L_S := L_{AWA_AW102.02A}$ $\quad L_S = 329\,ft$

$H_S := Z_{AW102.02A} - Z_{AW105.05A}$ $\quad H_S = 0\,ft$

Subcase X11 (low and high point drain, $F_{D6} = 1$ and $F_{D9} = 1$)*,
X10 (high point drain, FD6 = 1 and FD9 = 0)*,
X01 (low point drain, FD6 = 0 and FD9 = 1)
1 1/2-in.drain low point drain

Case 2 break between AW102 02A and AP pit

$L_O := L_{W105.05A_AW102.02A}$ $\quad L_O = 677\,ft$

$H_O := Z_{AW102.02A} - Z_{AW105.05A}$ $\quad H_O = 0\,ft$

$L_S := L_{AW102.02A_APpit}$ $\quad L_S = 966\,ft$

$H_S := Z_{APpit} - Z_{AW105.05A}$ $\quad H_S = -7.89\,ft$

Subcase X11 (low and high point drain, $F_{D6} = 1$ and $F_{D9} = 1$)*,
X10 (high point drain, FD6 = 1 and FD9 = 0)*,
X01 (low point drain, FD6 = 0 and FD9 = 1)
2-in.drain low point drain

Case 3 break between AP pit and AP A pit

$L_O := L_{W105.05A_APpit}$ $\quad L_O = 1643\,ft$

$H_O := Z_{APpit} - Z_{AW105.05A}$ $\quad H_O = -7.89\,ft$

$L_S := L_{APpit_APApit}$ $\quad L_S = 655\,ft$

$H_S := Z_{APApit} - Z_{AW105.05A}$ $\quad H_S = -10.5\,ft$

Subcase X11 (low and high point drain, $F_{D6} = 1$ and $F_{D9} = 1$)*,
X10 (high point drain, FD6 = 1 and FD9 = 0)*,
X01 (low point drain, FD6 = 0 and FD9 = 1)
2-in.drain low point drain

Case 4 break between AP A pit and WTP interface

$L_O := L_{W105.05A_APApit}$ $\quad L_O = 2298\,ft$

$H_O := Z_{APApit} - Z_{AW105.05A}$ $\quad H_O = -10.5\,ft$

$L_S := L_{APApit_WTPinterface}$ $\quad L_S = 2723\,ft$

$H_S := Z_{WTPinterface} - Z_{AW105.05A}$ $\quad H_S = -22.1\,ft$

Subcase X11 (low and high point drain, $F_{D6} = 1$ and $F_{D9} = 1$)*,
X10 (high point drain, FD6 = 1 and FD9 = 0)*,
X01 (low point drain, FD6 = 0 and FD9 = 1)
2-in.drain low point drain

* would require additional drain/relief valve at other end of line segment

X = 1 for FD3 = 1 (primary pipe downstream flow open)
0 for FD3 = 0 (primary pipe downstream flow blocked)

Client: CH2M Hill Hanford Group, Inc. WO/Job No. _____
Subject: Secondary Encasement Pipe Pressure Due to Primary Pipe Break in Waste Tank Cross-Site Transfer Piping System Date: 9/12/2001 By: L. J. Julyk
Checked: 9/25/01 By: R. Schlosser
Location: 200 Area - Hanford Site, Richland, Washington Revised: _____ By: _____

$F_K$ selects primary pipe internal support parameters in annulus
= 0 for existing in-Farm piping (no leak detection cable, no anchors)
= 1 for W058 and W314 extension of W058 (with leak detection cable 2-in. thk anchor, no radius in anchor slots)
= 2 for W058 and W314 extension of W058 (leak detection cable 2-in. thk anchor, with radius in anchor slots)
= 3 for new in-Farm W314 piping (1-in. thk anchor, with radius in anchor slots)

$D_{Di}$ internal pipe diameter of drain
= 1.5 or 2 inches for existing in-Farm piping (no rupture disks)
= 2 inches for W058 and W314 extension of W058 (with rupture disks)
= 2 inches for new in-Farm W314 piping (no rupture disks)

$F_{D3}$ $F_{D6}$ $F_{D9}$ switch to block (= 0) or open (= 1) flow downstream of break and drain location 6 or 9, respectively

$L_P$ total equivalent length of primary pipe from pump to discharge exit

$L_P = 5905\,ft$ $L_P = 1.118\,mi$

$H := Z_{WTPinterface} - Z_{AW105.05A}$ change in elevation of primary pipe from pump to point just before vertical increase in elevation at end of primary pipe at discharge to tank (see Figure 1) $H = -22\,ft$

$\Delta Z_D := -1 \cdot ft$ approximate change in elevation at drain

$Z := H + 45 \cdot ft$ vertical increase in elevation at end of primary pipe at discharge to tank at WTP $Z = 23\,ft$

Supernate Transfer
Case 4 break between AP A pit and WTP interface

$L_o := L_{W105.05A_APApit}$ $L_o = 2298\,ft$ start distance from pump of secondary encasement section under consideration

$H_o := Z_{APApit} - Z_{AW105.05A}$ $H_o = -10.5\,ft$ change in elevation of primary pipe from pump to point $L_o$ $H_o = -10.5\,ft$

$L_S := L_{APApit_WTPinterface}$ $L_S = 2723\,ft$ length of secondary encasement section under consideration between drains

$H_S := Z_{WTPinterface} - Z_{AW105.05A}$ $H_S = -22.1\,ft$ change in elevation of primary pipe from pump to point $L_o + L_S$ $H_S = -22.1\,ft$

$x_B := 1000 \cdot ft + L_o$ distance of break in primary pipe from transfer pump

$H_B(L_o, H_o, L_S, H_S, x_B) = -14.76\,ft$ elevation at assumed break location $x_B$ relative to transfer pump elevation

$t_C$ temperature of waste (°C)

$\rho$ bulk density of waste (kg/L)

Pipe roughness

$\varepsilon_P := 2 \cdot mil$ stainless steel primary pipe

$\varepsilon_S := 5 \cdot mil$ carbon steel secondary (encasement) pipe

$\varepsilon_D := 5 \cdot mil$ carbon steel drain pipe

**CH2MHILL Hanford Group, Inc.**

**EVALUATION ANALYSIS**

Calc. No. RPP-LJJ-005
Revision: 0
Page No. 4 of 22

Client: CH2M Hill Hanford Group, Inc.
Subject: Secondary Encasement Pipe Pressure Due to Primary Pipe Break in Waste Tank Cross-Site Transfer Piping System
Location: 200 Area - Hanford Site, Richland, Washington

WO/Job No. _____
Date: 9/12/2001 By: L. J. Julyk
Checked: 9/25/01 By: R. J. Schlosser
Revised: _____ By: _____

Assumed Crack Size Parameters

$D_{LDo} = \begin{pmatrix} 0 \\ 0.31 \\ 0.31 \\ 0 \end{pmatrix}$ in — Existing, W058, W058, W314 — diameter of leak detection cable

$\rho := 1.3 \cdot \frac{kg}{liter}$ $t_C := 60$

$T_F(t_C) = 140$

viscosity $\mu(\rho, t_C) = 1.197\,cP$

$L_c := 10 \cdot in$ crack length

$W_c := 0.1 \cdot in$ crack opening width

$A_{crack}(L_c, W_c) = 1\,in^2$ $\beta_{c1}(L_c, W_c) = 0.368$ $\beta_{c2}(L_c, W_c, D_{LDo}) = \begin{pmatrix} 0.22781 \\ 0.22826 \\ 0.22826 \\ 0.22781 \end{pmatrix}$

$P_{crack}(L_c, W_c) = 20.2\,in$

$D_{H_crack}(L_c, W_c) = 0.198\,in$ effective hydraulic diameter $\alpha_c(L_c, W_c) = 1.091$ $L/D_{oH}$ ratio for crack

$\varepsilon_c := 1 \cdot mil$ primary pipe through crack roughness

$V_c := 10 \cdot \frac{ft}{sec}$ $R_e(D_{H_crack}(L_c, W_c), V_c, \rho, \mu(\rho, t_C)) = 2 \times 10^4$ Reynolds number for flow through crack

thick-edged orifice with $\alpha = L/D_{oH} > 0.015$ $\alpha_c(L_c, W_c) = 1.091 > 0.15$ => thick-edged orifice

Lyons 1982, Eqn 4, pg. 158

$K_{crack}(L_c, W_c, V_c, \rho, t_C, \varepsilon_c, D_{LDo}) = \begin{pmatrix} 1.80719 \\ 1.80671 \\ 1.80671 \\ 1.80719 \end{pmatrix}$

Idelchik 1994, Diagram 4-12, pg. 219

$KK_{crack}(L_c, W_c, V_c, \rho, t_C, \varepsilon_c, D_{LDo}) = \begin{pmatrix} 1.58502 \\ 1.58459 \\ 1.58459 \\ 1.58502 \end{pmatrix}$

shap-edged orifice (Idelchik 1994, pg. 218, $\alpha = L/D_{oH} < 0.015$)

$KKK_{crack}(L_c, W_c, V_c, \rho, t_C, \varepsilon_c, D_{LDo}) = \begin{pmatrix} 2.61664 \\ 2.61598 \\ 2.61598 \\ 2.61664 \end{pmatrix}$

Encasement annulus K-resistance factors for guides and anchors modeled as thick-edged (long) orifice for $\alpha = L/D_{oH} > 0.015$

Lyons 1982, Eqn 4, pg. 158

| | | | | |
|---|---|---|---|---|
| Existing | $F_K := 0$ | $K_{guide}(v, \rho, t_C, \varepsilon, F_K) = 0.083$ | $K_{anchor}(v, \rho, t_C, \varepsilon, F_K) = 0$ | |
| W058 | $F_K := 1$ | $K_{guide}(v, \rho, t_C, \varepsilon, F_K) = 1.912$ | $K_{anchor}(v, \rho, t_C, \varepsilon, F_K) = 17.686$ | 3/4-in. thk no radius in slots |
| | $F_K := 2$ | $K_{guide}(v, \rho, t_C, \varepsilon, F_K) = 1.912$ | $K_{anchor}(v, \rho, t_C, \varepsilon, F_K) = 11.537$ | 3/4-in. thk with radius in slots |
| W314 | $F_K := 3$ | $K_{guide}(v, \rho, t_C, \varepsilon, F_K) = 0.083$ | $K_{anchor}(v, \rho, t_C, \varepsilon, F_K) = 10.696$ | 1-in. thk with radius in slots |

$V_z := 0 \cdot ft \cdot sec^{-1}$ $p_z := 0 \cdot psi$ $g = 32.174\,ft\,sec^{-2}$

$\Delta V := 0.1 \cdot ft\,sec^{-1}$

Apply conservation of mass (continuity) and energy (Bernoulli theorem) between nodes (see Figure 1a of Appendix A) and at the pipe break plus the characteristic pump head relation (see Figure 2 of Appendix A) to model the nonlinear system of equations that govern the steady-state flow behavior resulting from a primary pipe break at location $x_B$ relative to pump.

$H'_p(Q) := H_{NTP}(Q) - \Delta H_{pump}$

**SY-101 New Transfer Pump** (RPP-5667 Rev. 0B)
(Canned Motor Westinghouse Pump Model 2A-513-A1)

**Nonlinear governing system of equations**

Given

apply conservation of mass (continuity) and energy (Bernoulli theorem)

$V_0 \ge V_z \quad V_1 \ge V_z \quad V_2 \ge V_z \quad V_3 \ge V_z \quad V_4 \ge V_z \quad V_5 \ge V_z \quad V_6 \ge V_z$

continuity

$$A_{S6}(F_K) \cdot V_2 = F_{D6} \cdot A_f(D_{Di}) \cdot V_3$$
$$A_{S6}(F_K) \cdot V_4 = F_{D9} \cdot A_f(D_{Di}) \cdot V_5$$
$$A_P \cdot V_0 = A_P \cdot V_1 \cdot F_{D3} + A_{crack}(L_c, W_c) \cdot V_6$$
$$A_{crack}(L_c, W_c) \cdot V_6 = A_{S6}(F_K) \cdot (V_2 + V_4)$$

$$H_P = H'_p(A_P \cdot V_0)$$

pump head curve

Bernoulli (between nodes, see Figure 1a of Appendix A)

$$\left[H_P - f\left(R_e(D_{Pi}, V_0, \rho, \mu(\rho, t_C)), \frac{\varepsilon_P}{D_{Pi}}\right) \cdot \frac{x_B}{D_{Pi}} \cdot \frac{(V_0)^2}{2 \cdot g}\right] = \left(\frac{p_0}{\rho \cdot g} + H_B(L_o, H_o, L_S, H_S, x_B)\right) \qquad 1\text{-}2$$

$$\left[\frac{p_0}{\rho \cdot g} + \frac{(V_0)^2}{2 \cdot g}\right] = \left[\frac{p_1}{\rho \cdot g} + \frac{(V_1)^2}{2 \cdot g}\right] \qquad 2\text{-}3$$

$$\left[\frac{p_1}{\rho \cdot g} + \left(1 - f\left(R_e(D_{Pi}, V_1, \rho, \mu(\rho, t_C)), \frac{\varepsilon_P}{D_{Pi}}\right) \cdot \frac{L_P - x_B}{D_{Pi}} - K_E\right) \cdot \frac{(V_1)^2}{2 \cdot g} + H_B(L_o, H_o, L_S, H_S, x_B)\right] = \left[\frac{(V_1)^2}{2 \cdot g} + H + Z\right] \qquad 3\text{-}4$$

$$\left[\frac{p_0}{\rho \cdot g} + \frac{(V_0)^2}{2 \cdot g}\right] = \left[\frac{p_6}{\rho \cdot g} + \frac{(V_6)^2}{2 \cdot g} + K_{crack}\left(L_c, W_c, V_6, \rho, t_C, \varepsilon_c, D_{LDo_{F_K}}\right) \cdot \frac{(V_6)^2}{2 \cdot g}\right] \qquad 2\text{-crack}$$

$$\left[\frac{p_6}{\rho \cdot g} + \frac{(V_6)^2}{2 \cdot g}\right] = \left[\frac{p_2}{\rho \cdot g} + \frac{(V_2)^2}{2 \cdot g}\right] \qquad \text{crack-5}$$

**CH2MHILL Hanford Group, Inc.**

**EVALUATION ANALYSIS**

Calc. No. RPP-LJJ-005
Revision: 0
Page No. 6 of 22

Client: CH2M Hill Hanford Group, Inc.
Subject: Secondary Encasement Pipe Pressure Due to Primary Pipe Break in Waste Tank Cross-Site Transfer Piping System
Location: 200 Area - Hanford Site, Richland, Washington

WO/Job No. _____
Date: 9/12/2001 By: L. J. Julyk
Checked: 9/25/01 By: [illegible]
Revised: _____ By: _____

$$\left[\frac{p_2}{\rho\cdot g}+H_B(L_o,H_o,L_S,H_S,x_B)-f\left(R_e\left(D_{H_a6}(F_K),V_2,\rho,\mu(\rho,t_C)\right),\frac{\varepsilon_S}{D_{H_a6}(F_K)}\right)\cdot\frac{x_B-L_o}{D_{H_a6}(F_K)}\cdot\frac{(V_2)^2}{2\cdot g}\ldots+\left[1-\left(\begin{array}{l}I(F_K,L_o,x_B)\cdot K_{guide}(V_2,\rho,t_C,\varepsilon_S,F_K)\ldots\\+J(F_K,L_o,x_B)\cdot K_{anchor}(V_2,\rho,t_C,\varepsilon_S,F_K)+K_D(D_{Di},D_{LDo_{F_K}})\end{array}\right)\right]\cdot\frac{(V_2)^2}{2\cdot g}\right]=\left[\frac{p_3}{\rho\cdot g}\ldots+\frac{(V_3)^2}{2\cdot g}\ldots+H_o\right] \quad \text{5-6}$$

$$\left[\frac{p_3}{\rho\cdot g}+\left(1-f\left(R_e\left(D_{Di},V_3,\rho,\mu(\rho,t_C)\right),\frac{\varepsilon_D}{D_{Di}}\right)\cdot\frac{L_D(D_{Di},F_K)}{D_{Di}}-K_E\right)\cdot\frac{(V_3)^2}{2\cdot g}\right]=\frac{(V_3)^2}{2\cdot g}+\Delta Z_D \quad \text{6-7}$$

$$\left[\frac{p_6}{\rho\cdot g}+\frac{(V_6)^2}{2\cdot g}\right]=\left[\frac{p_4}{\rho\cdot g}+\frac{(V_4)^2}{2\cdot g}\right] \quad \text{crack-8}$$

$$\left[\frac{p_4}{\rho\cdot g}+H_B(L_o,H_o,L_S,H_S,x_B)-f\left(R_e\left(D_{H_a6}(F_K),V_4,\rho,\mu(\rho,t_C)\right),\frac{\varepsilon_S}{D_{H_a6}(F_K)}\right)\cdot\frac{L_S-(x_B-L_o)}{D_{H_a6}(F_K)}\cdot\frac{(V_4)^2}{2\cdot g}\ldots+\left[1-\left(\begin{array}{l}M(F_K,L_o,L_S,x_B)\cdot K_{guide}(V_4,\rho,t_C,\varepsilon_S,F_K)\ldots\\+N(F_K,L_o,L_S,x_B)\cdot K_{anchor}(V_4,\rho,t_C,\varepsilon_S,F_K)+K_D(D_{Di},D_{LDo_{F_K}})\end{array}\right)\right]\cdot\frac{(V_4)^2}{2\cdot g}\right]=\left[\frac{p_5}{\rho\cdot g}\ldots+\frac{(V_5)^2}{2\cdot g}\ldots+H_S\right] \quad \text{8-9}$$

$$\left[\frac{p_5}{\rho\cdot g}+\left(1-f\left(R_e\left(D_{Di},V_5,\rho,\mu(\rho,t_C)\right),\frac{\varepsilon_D}{D_{Di}}\right)\cdot\frac{L_D(D_{Di},F_K)}{D_{Di}}-K_E\right)\cdot\frac{(V_5)^2}{2\cdot g}\right]=\frac{(V_5)^2}{2\cdot g}+\Delta Z_D \quad \text{9-10}$$

Solution function

$$ff(L_o,H_o,L_S,H_S,x_B,\rho,t_C,\varepsilon_P,\varepsilon_S,\varepsilon_D,D_{Di},F_K,F_{D3},F_{D6},F_{D9},\Delta Z_D,L_P,H,Z,L_c,W_c,\varepsilon_c,H_P,p,V):=\mathrm{Find}(H_P,p,V)$$

$$\begin{array}{ccccccc}(p_2 & p_3 & p_5 & p_6 & p_8 & p_9 & p_c)^T\\ 0 & 1 & 2 & 3 & 4 & 5 & 6\end{array}\qquad\begin{array}{ccccccc}(V_1 & V_3 & V_5 & V_6 & V_8 & V_9 & V_c)^T\\ 0 & 1 & 2 & 3 & 4 & 5 & 6\end{array}$$

**CH2MHILL Hanford Group, Inc.**

**EVALUATION ANALYSIS**

Calc. No. RPP-LJJ-005
Revision: 0
Page No. 7 of 22

Client: CH2M Hill Hanford Group, Inc.
Subject: Secondary Encasement Pipe Pressure Due to Primary Pipe Break in Waste Tank Cross-Site Transfer Piping System
Location: 200 Area - Hanford Site, Richland, Washington

WO/Job No. _____
Date: 9/12/2001 By: L. J. Julyk
Checked: 9/25/01 By: [illegible]
Revised: _____ By: _____

For plotting, following function returns nth solution variable at points defined in vector $x_B$ n = result variable selected

$$PP(L_o, H_o, L_S, H_S, x_B, \rho, t_C, \varepsilon_P, \varepsilon_S, \varepsilon_D, D_{Di}, F_K, F_{D3}, F_{D6}, F_{D9}, \Delta Z_D, L_P, H, Z, n, L_c, W_c, \varepsilon_c, H_P, p, V) :=$$

```
vp ← 0
H'P ← HP
p' ← p
V' ← V
for i ∈ 0..length(xB) − 1
    xBB ← xBi
    X ← ff(Lo, Ho, LS, HS, xI
    H'P ← X0
    p' ← X1
    V' ← X2
    V' ← V' + ΔV/4
    Y ← X1
    vpi ← Yn
vp
```

**CH2MHILL Hanford Group, Inc.**

**EVALUATION ANALYSIS**

Calc. No. RPP-LJJ-005
Revision: 0
Page No. 8 of 22

Client: CH2M Hill Hanford Group, Inc. WO/Job No. _____
Subject: Secondary Encasement Pipe Pressure Due to Primary Pipe Break in Waste Tank Cross-Site Transfer Piping System
Date: 9/12/2001 By: L. J. Julyk
Checked: 9/25-/01 By: R. Schlone
Location: 200 Area - Hanford Site, Richland, Washington
Revised: _____ By: _____

**AW105-WTP Supernate Transfer**

**Case 0 break between AW105 05A and AWA**

$L_o := 0 \cdot ft$ $\quad L_o = 0\,ft$ start distance from pump of secondary encasement section under consideration

$H_o := 0 \cdot ft$ $\quad H_o = 0\,ft$ change in elevation of primary pipe from pump to point $L_o$

$L_S := L_{AW105.05A_AWA}$ $\quad L_S = 348\,ft$ length of secondary encasement section under consideration between drains

$H_S := Z_{AWA} - Z_{AW105.05A}$ $\quad H_S = 0.85\,ft$ change in elevation of primary pipe from pump to point $L_o + L_S$

Subcase X11 (low and high point drain, $F_{D6} = 1$ and $F_{D9} = 1$)*,
X10 (low point drain, FD6 = 1 and FD9 = 0),
X01 (high point drain, FD6 = 0 and FD9 = 1)*

$D_{Di} := D_{D1.5}$ $\quad \rho := 1.3 \cdot \frac{kg}{liter}$

$t_C := 60$ °C

**Initial guesses (X10)** $Q := 326 \cdot gpm$ $\quad V_1 := \frac{Q}{A_P}$ $\quad V_1 = 14.148 \frac{ft}{sec}$ flow velocities

Low point drain open

$F_K := 0$ $\quad F_{D3} := 0$ $\quad F_{D6} := 1$ $\quad F_{D9} := 0$

$H_{P10} := H'_p(Q)$ pump head $\quad H_{P10} = 239\,ft$

$p_2 := 148 \cdot psi$ primary pipe pressure just up stream of break

$p_3 := 149 \cdot psi$ primary pipe pressure just down stream of break

$p_5 := 20 \cdot psi$ secondary pipe pressure just up stream of break

$p_6 := 12 \cdot psi$ secondary pipe pressure at drain up stream of break

$p_8 := 20 \cdot psi$ secondary pipe pressure just down stream of break

$p_9 := 8 \cdot psi$ secondary pipe pressure at drain down stream of break

$V_5 := \frac{V_1 \cdot F_{D6} + \Delta V}{3.1}$

$V_6 := V_5 \cdot \frac{A_{S6}(F_K)}{A_f(D_{Di})}$ $\quad \frac{A_{S6}(F_K)}{A_P} = 2.607$

$V_8 := \frac{V_1 \cdot F_{D9} + \Delta V}{50}$ $\quad \frac{A_{S6}(F_K)}{A_f(D_{Di})} = 9.46$

$V_9 := V_8 \cdot \frac{A_{S6}(F_K)}{A_f(D_{Di})}$

$p_c := 1 \cdot psi$ apply conservation of mass (continuity) at break

$V_3 := V_1 - \frac{A_{S6}(F_K)}{A_P} \cdot (V_5 + V_8)$ $\quad V_3 = 2.16 \frac{ft}{sec}$

$V_c := \frac{A_{S6}(F_K)}{A_{crack}(L_c, W_c)} \cdot (V_5 + V_8)$ $\quad V_c = 88.6 \frac{ft}{sec}$

$p_{10} := (p_2\ p_3\ p_5\ p_6\ p_8\ p_9\ p_c)^T$ $\quad V_{10} := (V_1\ V_3\ V_5\ V_6\ V_8\ V_9\ V_c)^T$

**use Existing Piping Guide/Anchor** $\quad F_K = 0$

**CH2MHILL Hanford Group, Inc.**

**EVALUATION ANALYSIS**

Calc. No. RPP-LJJ-005
Revision: 0
Page No. 9 of 22

Client: CH2M Hill Hanford Group, Inc.
Subject: Secondary Encasement Pipe Pressure Due to Primary Pipe Break in Waste Tank Cross-Site Transfer Piping System
Location: 200 Area - Hanford Site, Richland, Washington

WO/Job No. _____
Date: 9/12/2001 By: L. J. Julyk
Checked: 9/25/01 By: R. Schlosse
Revised: _____ By: _____

**Case 0 (X10)**

**SY-101 New Transfer Pump** (RPP-5667 Rev. 0B)
(Canned Motor Westinghouse Pump Model 2A-513-A1)

Input==========

$L_o = 0\,ft$ $\quad H = -22\,ft$ $\quad \varepsilon_P = 2\,mil$

$L_S = 348\,ft$ $\quad \rho = 1.3\,\frac{kg}{liter}$ $\quad Z = 22.9\,ft$ $\quad \varepsilon_S = 5\,mil$ $\quad D_{LDo_{F_K}} = 0\,in$ $\quad F_K = 0$

$L_P = 5905\,ft$ $\quad F_{D3} = 0$ $\quad \varepsilon_D = 5\,mil$ $\quad L_c = 10\,in$

$x_B := 347 \cdot ft + L_o$ $\quad t_C = 60\ ^{\circ}C$ $\quad D_{Di} = 1.61\,in$ $\quad \Delta Z_D = -1\,ft$ $\quad L_D(D_{Di}, F_K) = 7.025\,ft$ $\quad W_c = 0.1\,in$

$F_{D6} := 1$ $\quad F_{D9} := 0$ $\quad J(F_K, L_o, x_B) = 0$ $\quad N(F_K, L_o, L_S, x_B) = 0$ $\quad \varepsilon_c = 1\,mil$

$I(F_K, L_o, x_B) = 39$ $\quad M(F_K, L_o, L_S, x_B) = 0$

$$\begin{pmatrix} h_{P10} \\ P_{10} \\ v_{10} \end{pmatrix} := ff(L_o, H_o, L_S, H_S, x_B, \rho, t_C, \varepsilon_P, \varepsilon_S, \varepsilon_D, D_{Di}, F_K, F_{D3}, F_{D6}, F_{D9}, \Delta Z_D, L_P, H, Z, L_c, W_c, \varepsilon_c, H_{P10}, p_{10}, V_{10})$$

$$\begin{pmatrix} P_2 \\ P_3 \\ P_5 \\ P_6 \\ P_8 \\ P_9 \\ P_{crack} \end{pmatrix} := P_{10} \qquad \begin{pmatrix} v_1 \\ v_3 \\ v_5 \\ v_6 \\ v_8 \\ v_9 \\ v_{crack} \end{pmatrix} := v_{10}$$

Results----------

$h_{P10} = 352\,ft$ $\quad \mu(\rho, t_C) = 1.197\,cP$ $\quad L_{i_{F_K}} = 9\,ft$ $\quad L_{j_{F_K}} = 9 \times 10^4\,ft$

$P_2 = 169\,psi$ $\quad v_1 = 11.2\,ft\,sec^{-1}$ $\quad A_P \cdot v_1 = 258.1\,gpm$ $\quad D_{Di} = 1.61\,in$

$P_3 = 169.7\,psi$ $\quad F_{D3} \cdot v_3 = 0\,ft\,sec^{-1}$ $\quad F_{D3} \cdot A_P \cdot v_3 = 0\,gpm$

$P_5 = 61.7\,psi$ $\quad v_5 = 4.3\,ft\,sec^{-1}$ $\quad A_{S6}(F_K) \cdot v_5 = 258.1\,gpm$

$P_6 = 34.2\,psi$ $\quad F_{D6} \cdot v_6 = 40.7\,ft\,sec^{-1}$ $\quad F_{D6} \cdot A_f(D_{Di}) \cdot v_6 = 258.1\,gpm$

$P_8 = 61.9\,psi$ $\quad v_8 = 0\,ft\,sec^{-1}$ $\quad A_{S6}(F_K) \cdot v_8 = 0\,gpm$

$P_9 = 43.5\,psi$ $\quad F_{D9} \cdot v_9 = 0\,ft\,sec^{-1}$ $\quad F_{D9} \cdot A_f(D_{Di}) \cdot v_9 = 0\,gpm$

$P_{crack} = 1.8\,psi$ $\quad v_1 \cdot A_P = F_{D3} \cdot A_P \cdot v_3 + A_{S6}(F_K) \cdot v_5 + A_{S6}(F_K) \cdot v_8 = 258.1\,gpm$

(continuity check at break, OK)

$v_{crack} = 82.8\,ft\,sec^{-1}$

$R_e(D_{H_crack}(L_c, W_c), v_{crack}, \rho, \mu(\rho, t_C)) = 1 \times 10^5$

$P_2 - P_5 = 107.292\,psi$

**CH2MHILL Hanford Group, Inc.**

**EVALUATION ANALYSIS**

Calc. No. RPP-LJJ-005
Revision: 0
Page No. 10 of 22

Client: CH2M Hill Hanford Group, Inc.
Subject: Secondary Encasement Pipe Pressure Due to Primary Pipe Break in Waste Tank Cross-Site Transfer Piping System
Location: 200 Area - Hanford Site, Richland, Washington

WO/Job No. _____
Date: 9/12/2001 By: L. J. Julyk
Checked: 9/25/01 By: R. Gilbert
Revised: _____ By: _____

**Figure 1a. Case 0: Maximum Pressure in AW105-WTP Encasement Pipe Due to Primary Pipe Break (Between AW105 05A and AWA) within Encasement Section of Length $L_s$ Starting at $L_o$ Relative to Transfer Pump for Supernate Waste Transfer at Temperature of 60 °C.**

$F_K = 0$

$Z = 22.9\,ft$ $t_C = 60\,°C$ $\rho = 1.3\,\frac{kg}{liter}$ $\mu(\rho, t_C) = 1.197\,cP$ $D_{LDo_{F_K}} = 0\,in$ Low point drain $D_{Di} = 1.61\,in$ $L_c = 10\,in$ $W_c = 0.1\,in$ $\varepsilon_c = 1\,mil$

$H = -22.1\,ft$ $L_o = 0\,ft$ $L_S = 348\,ft$ $L_P = 5905\,ft$ $L_{i_{F_K}} = 9\,ft$ $\varepsilon_P = 2\,mil$ $L_D(D_{Di}, F_K) = 7\,ft$

$\Delta Z_D = -1\,ft$ $H_o = 0\,ft$ $H_S = 0.85\,ft$ $F_{D3} = 0$ $L_{j_{F_K}} = 9 \times 10^4\,ft$ $\varepsilon_S = 5\,mil$ $\varepsilon_D = 5\,mil$

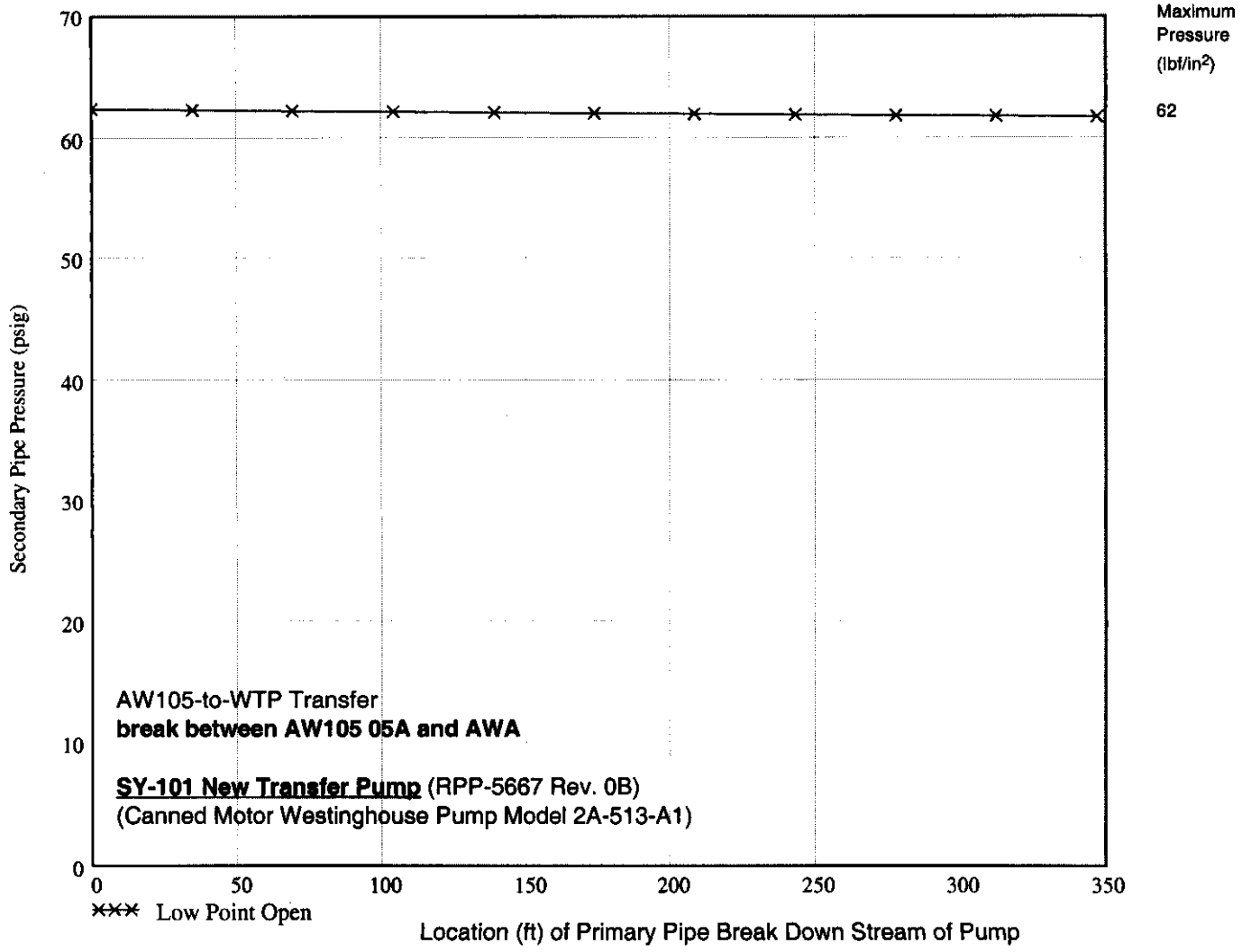

**CH2MHILL Hanford Group, Inc.**

**EVALUATION ANALYSIS**

Calc. No. RPP-LJJ-005
Revision: 0
Page No. 11 of 22

Client: CH2M Hill Hanford Group, Inc.
Subject: Secondary Encasement Pipe Pressure Due to Primary Pipe Break in Waste Tank Cross-Site Transfer Piping System
Location: 200 Area - Hanford Site, Richland, Washington

WO/Job No. _____
Date: 9/12/2001 By: L. J. Julyk
Checked: 9/25/01 By: [illegible]
Revised: _____ By: _____

**Supernate Transfer**
**Case 1 break between AWA and AW102 02A**

$L_o := L_{AW105.05A_AWA}$ $L_o = 348\,ft$ start distance from pump of secondary encasement section under consideration

$H_o := Z_{AWA} - Z_{AW105.05A}$ $H_o = 0.85\,ft$ change in elevation of primary pipe from pump to point $L_o$

$L_S := L_{AWA_AW102.02A}$ $L_S = 329\,ft$ length of secondary encasement section under consideration between drains

$H_S := Z_{AW102.02A} - Z_{AW105.05A}$ $H_S = 0\,ft$ change in elevation of primary pipe from pump to point $L_o + L_S$

Subcase X11 (low and high point drain, $F_{D6} = 1$ and $F_{D9} = 1$)*,
X10 (high point drain, FD6 = 1 and FD9 = 0)*,
X01 (low point drain, FD6 = 0 and FD9 = 1)

**use Existing guide/anchor**

$D_{Di} = 1.61\,in$

**Initial guesses (X01)** $Q := 270 \cdot gpm$ $V_1 := \frac{Q}{A_P}$ $V_1 = 11.718\,\frac{ft}{sec}$ low velocities

$F_K = 0$ $F_{D3} = 0$ $F_{D6} := 0$ $F_{D9} := 1$

Low point drain open

$H_{P01} := H'_p(Q)$ pump head $H_{P01} = 334\,ft$

$p_2 := 185 \cdot psi$ primary pipe pressure just up stream of break

$p_3 := 185 \cdot psi$ primary pipe pressure just down stream of break

$p_5 := 67 \cdot psi$ secondary pipe pressure just up stream of break

$p_6 := 47 \cdot psi$ secondary pipe pressure at drain up stream of break

$p_8 := 67 \cdot psi$ secondary pipe pressure just down stream of break

$p_9 := 37 \cdot psi$ secondary pipe pressure at drain down stream of break

$V_5 := \frac{V_1 \cdot F_{D6} + \Delta V}{50}$

$V_6 := V_5 \cdot \frac{A_{S6}(F_K)}{A_f(D_{Di})}$ $\frac{A_{S6}(F_K)}{A_P} = 2.607$

$V_8 := \frac{V_1 \cdot F_{D9} + \Delta V}{2.7}$ $\frac{A_{S6}(F_K)}{A_f(D_{Di})} = 9.46$

$V_9 := V_8 \cdot \frac{A_{S6}(F_K)}{A_f(D_{Di})}$

$p_c := 1.7 \cdot psi$

apply conservation of mass (continuity) at break

$V_3 := V_1 - \frac{A_{S6}(F_K)}{A_P} \cdot (V_5 + V_8)$ $V_3 = 0.3\,\frac{ft}{sec}$

$V_c := \frac{A_{S6}(F_K)}{A_{crack}(L_c, W_c)} \cdot (V_5 + V_8)$ $V_c = 84.4\,\frac{ft}{sec}$

$p_{01} := (p_2\ p_3\ p_5\ p_6\ p_8\ p_9\ p_c)^T$
0 1 2 3 4 5 6

$V_{01} := (V_1\ V_3\ V_5\ V_6\ V_8\ V_9\ V_c)^T$
0 1 2 3 4 5 6

**CH2MHILL Hanford Group, Inc.**

**EVALUATION ANALYSIS**

Calc. No. RPP-LJJ-005
Revision: 0
Page No. 12 of 22

Client: CH2M Hill Hanford Group, Inc.
Subject: Secondary Encasement Pipe Pressure Due to Primary Pipe Break in Waste Tank Cross-Site Transfer Piping System
Location: 200 Area - Hanford Site, Richland, Washington

WO/Job No. _____
Date: 9/12/2001 By: L. J. Julyk
Checked: 9/25/01 By: [illegible]
Revised: _____ By: _____

**Case 1 (X01)**

Input==========

**SY-101 New Transfer Pump** (RPP-5667 Rev. 0B)
(Canned Motor Westinghouse Pump Model 2A-513-A1)

$L_o = 348\,ft$ $\quad H = -22\,ft$ $\quad \varepsilon_P = 2\,mil$

$L_S = 329\,ft$ $\quad \rho = 1.3\,\frac{kg}{liter}$ $\quad Z = 22.9\,ft$ $\quad \varepsilon_S = 5\,mil$ $\quad D_{LDo_{F_K}} = 0\,in$ $\quad F_K = 0$

$L_P = 5905\,ft$ $\quad F_{D3} = 0$ $\quad \varepsilon_D = 5\,mil$

$x_B := 0 \cdot ft + L_o$ $\quad t_C = 60\ ^{\circ}C$ $\quad D_{Di} = 1.61\,in$ $\quad \Delta Z_D = -1\,ft$ $\quad L_D(D_{Di}, F_K) = 7.025\,ft$

$L_c = 10\,in$
$W_c = 0.1\,in$
$\varepsilon_c = 1\,mil$

$F_{D6} := 0$ $\quad F_{D9} := 1$ $\quad J(F_K, L_o, x_B) = 0$ $\quad N(F_K, L_o, L_S, x_B) = 0$

$I(F_K, L_o, x_B) = 0$ $\quad M(F_K, L_o, L_S, x_B) = 37$

$$\begin{pmatrix} h_{P01} \\ P_{01} \\ v_{01} \end{pmatrix} := ff(L_o, H_o, L_S, H_S, x_B, \rho, t_C, \varepsilon_P, \varepsilon_S, \varepsilon_D, D_{Di}, F_K, F_{D3}, F_{D6}, F_{D9}, \Delta Z_D, L_P, H, Z, L_c, W_c, \varepsilon_c, H_{P01}, p_{01}, V_{01})$$

$$\begin{pmatrix} P_2 \\ P_3 \\ P_5 \\ P_6 \\ P_8 \\ P_9 \\ P_{crack} \end{pmatrix} := P_{01} \qquad \begin{pmatrix} v_1 \\ v_3 \\ v_5 \\ v_6 \\ v_8 \\ v_9 \\ v_{crack} \end{pmatrix} := v_{01}$$

Results----------

$h_{P01} = 351\,ft$ $\quad \mu(\rho, t_C) = 1.197\,cP$ $\quad L_{i_{F_K}} = 9\,ft$ $\quad L_{j_{F_K}} = 9 \times 10^4\,ft$

$P_2 = 168.8\,psi$ $\quad v_1 = 11.2\,ft\,sec^{-1}$ $\quad A_P \cdot v_1 = 258.2\,gpm$ $\quad D_{Di} = 1.61\,in$

$P_3 = 169.5\,psi$ $\quad F_{D3} \cdot v_3 = 0\,ft\,sec^{-1}$ $\quad F_{D3} \cdot A_P \cdot v_3 = 0\,gpm$

$P_5 = 61.6\,psi$ $\quad v_5 = 0\,ft\,sec^{-1}$ $\quad A_{S6}(F_K) \cdot v_5 = 0\,gpm$

$P_6 = 43.3\,psi$ $\quad F_{D6} \cdot v_6 = 0\,ft\,sec^{-1}$ $\quad F_{D6} \cdot A_f(D_{Di}) \cdot v_6 = 0\,gpm$

$P_8 = 61.4\,psi$ $\quad v_8 = 4.3\,ft\,sec^{-1}$ $\quad A_{S6}(F_K) \cdot v_8 = 258.2\,gpm$

$P_9 = 34.3\,psi$ $\quad F_{D9} \cdot v_9 = 40.7\,ft\,sec^{-1}$ $\quad F_{D9} \cdot A_f(D_{Di}) \cdot v_9 = 258.2\,gpm$

$P_{crack} = 1.5\,psi$ $\quad v_1 \cdot A_P = F_{D3} \cdot A_P \cdot v_3 + A_{S6}(F_K) \cdot v_5 + A_{S6}(F_K) \cdot v_8 = 258.2\,gpm$

(continuity check at break, OK)

$v_{crack} = 82.8\,ft\,sec^{-1}$

$R_e(D_{H_crack}(L_c, W_c), v_{crack}, \rho, \mu(\rho, t_C)) = 1 \times 10^5$

$P_2 - P_5 = 107.231\,psi$

**CH2MHILL Hanford Group, Inc.**

**EVALUATION ANALYSIS**

Calc. No. RPP-LJJ-005
Revision: 0
Page No. 13 of 22

Client: CH2M Hill Hanford Group, Inc.
Subject: Secondary Encasement Pipe Pressure Due to Primary Pipe Break in Waste Tank Cross-Site Transfer Piping System
Location: 200 Area - Hanford Site, Richland, Washington

WO/Job No. _____
Date: 9/12/2001 By: L. J. Julyk
Checked: 9/25/01 By: [signature]
Revised: _____ By: _____

**Figure 1b. Case 1: Maximum Pressure in AW105-WTP Encasement Pipe Due to Primary Pipe Break (Between AWA and AW102 02A) within Encasement Section of Length $L_s$ Starting at $L_o$ Relative to Transfer Pump for Supernate Waste Transfer at Temperature of 60 °C.**

$F_K = 0$ Low point drain $L_c = 10\,in$

$Z = 22.9\,ft$ $t_C = 60\,°C$ $\rho = 1.3\,\frac{kg}{liter}$ $\mu(\rho, t_C) = 1.197\,cP$ $D_{LDo_{F_K}} = 0\,in$ $D_{Di} = 1.61\,in$ $W_c = 0.1\,in$

$H = -22.1\,ft$ $L_o = 348\,ft$ $L_S = 329\,ft$ $L_P = 5905\,ft$ $L_{i_{F_K}} = 9\,ft$ $\varepsilon_P = 2\,mil$ $L_D(D_{Di}, F_K) = 7\,ft$ $\varepsilon_c = 1\,mil$

$\Delta Z_D = -1\,ft$ $H_o = 0.85\,ft$ $H_S = 0\,ft$ $F_{D3} = 0$ $L_{j_{F_K}} = 9 \times 10^4\,ft$ $\varepsilon_S = 5\,mil$ $\varepsilon_D = 5\,mil$

Maximum Pressure (lbf/in²)

62

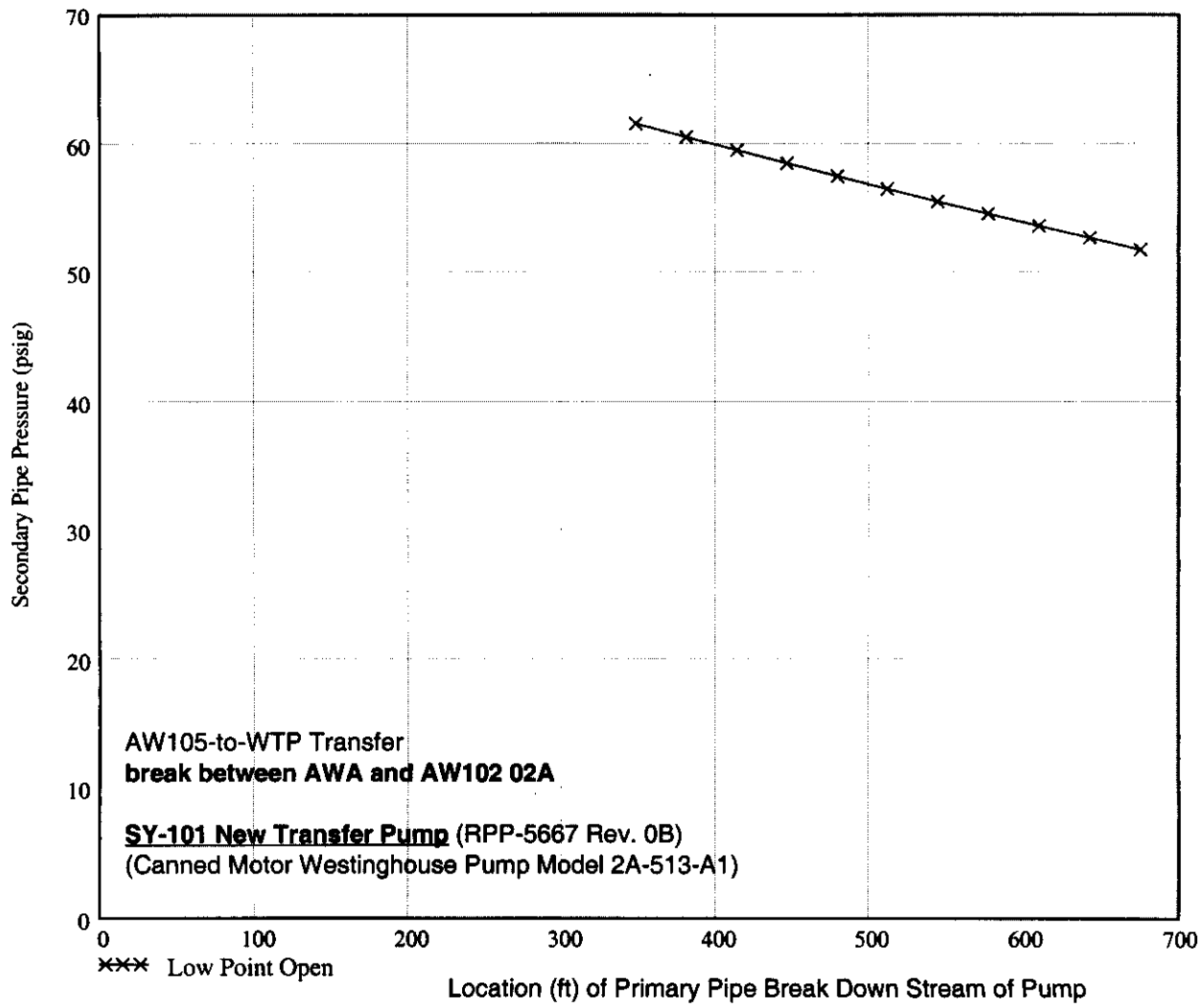

**CH2MHILL Hanford Group, Inc.**

**EVALUATION ANALYSIS**

Calc. No. RPP-LJJ-005
Revision: 0
Page No. 14 of 22

Client: CH2M Hill Hanford Group, Inc. WO/Job No. _____.
Subject: Secondary Encasement Pipe Pressure Due to Primary Pipe Break in Waste Tank Cross-Site Transfer Piping System
Date: 9/12/2001 By: L. J. Julyk
Checked: 9/25/01 By: [illegible]
Revised: _____ By: _____
Location: 200 Area - Hanford Site, Richland, Washington

**Supernate Transfer**

**Case 2 break between AW102 02A and AP pit**

$L_o := L_{W105.05A_AW102.02A}$ $L_o = 677\,ft$ *start distance from pump of secondary encasement section under consideration*

$H_o := Z_{AW102.02A} - Z_{AW105.05A}$ $H_o = 0\,ft$ change in elevation of primary pipe from pump to point $L_o$

$L_S := L_{AW102.02A_APpit}$ $L_S = 966\,ft$ length of secondary encasement section under consideration between drains

$H_S := Z_{APpit} - Z_{AW105.05A}$ $H_S = -7.89\,ft$ hange in elevation of primary pipe from pump to point $L_o + L_S$

**use Existing guide/anchor**

Subcase X11 (low and high point drain, $F_{D6} = 1$ and $F_{D9} = 1$)*,
X10 (high point drain, FD6 = 1 and FD9 = 0)*,
X01 (low point drain, FD6 = 0 and FD9 = 1)

$D_{Di} = 1.61\,in$

**Initial guesses (X01)** $Q := 307 \cdot gpm$ $V_1 := \frac{Q}{A_P}$ $V_1 = 13.323\,\frac{ft}{sec}$ low velocities

$F_K = 0$ $F_{D3} = 0$ $F_{D6} := 0$ $F_{D9} := 1$

Low point drain open

$H_{P01} := H'_p(Q)$ *pump head* $H_{P01} = 273\,ft$

$p_2 := 94 \cdot psi$ primary pipe pressure just up stream of break

$p_3 := 94 \cdot psi$ primary pipe pressure just down stream of break

$p_5 := 36 \cdot psi$ secondary pipe pressure just up stream of break

$p_6 := 25 \cdot psi$ secondary pipe pressure at drain up stream of break

$p_8 := 36 \cdot psi$ secondary pipe pressure just down stream of break

$p_9 := 18 \cdot psi$ secondary pipe pressure at drain down stream of break

$V_5 := \frac{V_1 \cdot F_{D6} + \Delta V}{3}$

$V_6 := V_5 \cdot \frac{A_{S6}(F_K)}{A_f(D_{Di})}$ $\frac{A_{S6}(F_K)}{A_P} = 2.607$

$V_8 := \frac{V_1 \cdot F_{D9} + \Delta V}{4.2}$ $\frac{A_{S6}(F_K)}{A_f(D_{Di})} = 9.46$

$V_9 := V_8 \cdot \frac{A_{S6}(F_K)}{A_f(D_{Di})}$

$p_c := 3.8 \cdot psi$ apply conservation of mass (continuity) at break

$V_3 := V_1 - \frac{A_{S6}(F_K)}{A_P} \cdot (V_5 + V_8)$ $V_3 = 4.91\,\frac{ft}{sec}$

$V_c := \frac{A_{S6}(F_K)}{A_{crack}(L_c, W_c)} \cdot (V_5 + V_8)$ $V_c = 62.2\,\frac{ft}{sec}$

$p_{01} := (p_2\ p_3\ p_5\ p_6\ p_8\ p_9\ p_c)^T$
0 1 2 3 4 5 6

$V_{01} := (V_1\ V_3\ V_5\ V_6\ V_8\ V_9\ V_c)^T$
0 1 2 3 4 5 6

**CH2MHILL Hanford Group, Inc.**

**EVALUATION ANALYSIS**

Calc. No. RPP-LJJ-005
Revision: 0
Page No. 15 of 22

Client: CH2M Hill Hanford Group, Inc.
Subject: Secondary Encasement Pipe Pressure Due to Primary Pipe Break in Waste Tank Cross-Site Transfer Piping System
Location: 200 Area - Hanford Site, Richland, Washington

WO/Job No. _____
Date: 9/12/2001 By: L. J. Julyk
Checked: 9/25/01 By: R. R. Malone
Revised: _____ By: _____

**Case 2 (X01)**

Input==========

**SY-101 New Transfer Pump** (RPP-5667 Rev. 0B)
(Canned Motor Westinghouse Pump Model 2A-513-A1)

$L_o = 677\,ft$ $\quad H = -22\,ft$ $\quad \varepsilon_P = 2\,mil$

$L_S = 966\,ft$ $\quad \rho = 1.3\,\frac{kg}{liter}$ $\quad Z = 22.9\,ft$ $\quad \varepsilon_S = 5\,mil$ $\quad D_{LDo_{F_K}} = 0\,in$ $\quad F_K = 0$

$L_P = 5905\,ft$ $\quad F_{D3} = 0$ $\quad \varepsilon_D = 5\,mil$

$x_B := 965 \cdot ft + L_o$ $\quad t_C = 60\ ^{\circ}C$ $\quad D_{Di} = 1.61\,in$ $\quad \Delta Z_D = -1\,ft$ $\quad L_D(D_{Di}, F_K) = 7.025\,ft$

$L_c = 10\,in$
$W_c = 0.1\,in$
$\varepsilon_c = 1\,mil$

$F_{D6} := 0$ $\quad F_{D9} := 1$ $\quad J(F_K, L_o, x_B) = 0$ $\quad N(F_K, L_o, L_S, x_B) = 0$

$I(F_K, L_o, x_B) = 107$ $\quad M(F_K, L_o, L_S, x_B) = 0$

$$\begin{pmatrix} h_{P01} \\ P_{01} \\ v_{01} \end{pmatrix} := ff(L_o, H_o, L_S, H_S, x_B, \rho, t_C, \varepsilon_P, \varepsilon_S, \varepsilon_D, D_{Di}, F_K, F_{D3}, F_{D6}, F_{D9}, \Delta Z_D, L_P, H, Z, L_c, W_c, \varepsilon_c, H_{P01}, p_{01}, V_{01})$$

$$\begin{pmatrix} P_2 \\ P_3 \\ P_5 \\ P_6 \\ P_8 \\ P_9 \\ P_{crack} \end{pmatrix} := P_{01} \quad \begin{pmatrix} v_1 \\ v_3 \\ v_5 \\ v_6 \\ v_8 \\ v_9 \\ v_{crack} \end{pmatrix} := v_{01}$$

Results----------

$h_{P01} = 397\,ft$ $\quad \mu(\rho, t_C) = 1.197\,cP$ $\quad L_{i_{F_K}} = 9\,ft$ $\quad L_{j_{F_K}} = 9 \times 10^4\,ft$

$P_2 = 123.8\,psi$ $\quad v_1 = 9.8\,ft\,sec^{-1}$ $\quad A_P \cdot v_1 = 225.5\,gpm$ $\quad D_{Di} = 1.61\,in$

$P_3 = 124.3\,psi$ $\quad F_{D3} \cdot v_3 = 0\,ft\,sec^{-1}$ $\quad F_{D3} \cdot A_P \cdot v_3 = 0\,gpm$

$P_5 = 42\,psi$ $\quad v_5 = 0\,ft\,sec^{-1}$ $\quad A_{S6}(F_K) \cdot v_5 = 0\,gpm$

$P_6 = 26.4\,psi$ $\quad F_{D6} \cdot v_6 = 0\,ft\,sec^{-1}$ $\quad F_{D6} \cdot A_f(D_{Di}) \cdot v_6 = 0\,gpm$

$P_8 = 41.9\,psi$ $\quad v_8 = 3.8\,ft\,sec^{-1}$ $\quad A_{S6}(F_K) \cdot v_8 = 225.5\,gpm$

$P_9 = 26\,psi$ $\quad F_{D9} \cdot v_9 = 35.5\,ft\,sec^{-1}$ $\quad F_{D9} \cdot A_f(D_{Di}) \cdot v_9 = 225.5\,gpm$

$P_{crack} = -3.8\,psi$ $\quad v_1 \cdot A_P = F_{D3} \cdot A_P \cdot v_3 + A_{S6}(F_K) \cdot v_5 + A_{S6}(F_K) \cdot v_8 = 225.5\,gpm$

(continuity check at break, OK)

$v_{crack} = 72.3\,ft\,sec^{-1}$

$R_e(D_{H_crack}(L_c, W_c), v_{crack}, \rho, \mu(\rho, t_C)) = 1 \times 10^5$

$P_2 - P_5 = 81.764\,psi$

**CH2MHILL Hanford Group, Inc.**

**EVALUATION ANALYSIS**

Calc. No. RPP-LJJ-005
Revision: 0
Page No. 16 of 22

Client: CH2M Hill Hanford Group, Inc.
Subject: Secondary Encasement Pipe Pressure Due to Primary Pipe Break in Waste Tank Cross-Site Transfer Piping System
Location: 200 Area - Hanford Site, Richland, Washington

WO/Job No. _____
Date: 9/12/2001 By: L. J. Julyk
Checked: 9/25/01 By: [illegible]
Revised: _____ By: _____

**Figure 1c. Case 2: Maximum Pressure in AW105-WTP Encasement Pipe Due to Primary Pipe Break (Between AW102 02A and AP Pit) within Encasement Section of Length $L_s$ Starting at $L_o$ Relative to Transfer Pump for Supernate Waste Transfer at Temperature of 60 °C.**

$F_K = 0$ | Low point drain | $L_c = 10\,in$

$Z = 22.9\,ft$ | $t_C = 60\,°C$ | $\rho = 1.3\,\frac{kg}{liter}$ | $\mu(\rho, t_C) = 1.197\,cP$ | $D_{LDo_{F_K}} = 0\,in$ | $D_{Di} = 1.61\,in$ | $W_c = 0.1\,in$

$H = -22.1\,ft$ | $L_o = 677\,ft$ | $L_S = 966\,ft$ | $L_P = 5905\,ft$ | $L_{i_{F_K}} = 9\,ft$ | $\varepsilon_P = 2\,mil$ | $L_D(D_{Di}, F_K) = 7\,ft$ | $\varepsilon_c = 1\,mil$

$\Delta Z_D = -1\,ft$ | $H_o = 0\,ft$ | $H_S = -7.89\,ft$ | $F_{D3} = 0$ | $L_{j_{F_K}} = 9 \times 10^4\,ft$ | $\varepsilon_S = 5\,mil$ | $\varepsilon_D = 5\,mil$

Maximum Pressure (lbf/in²)

63

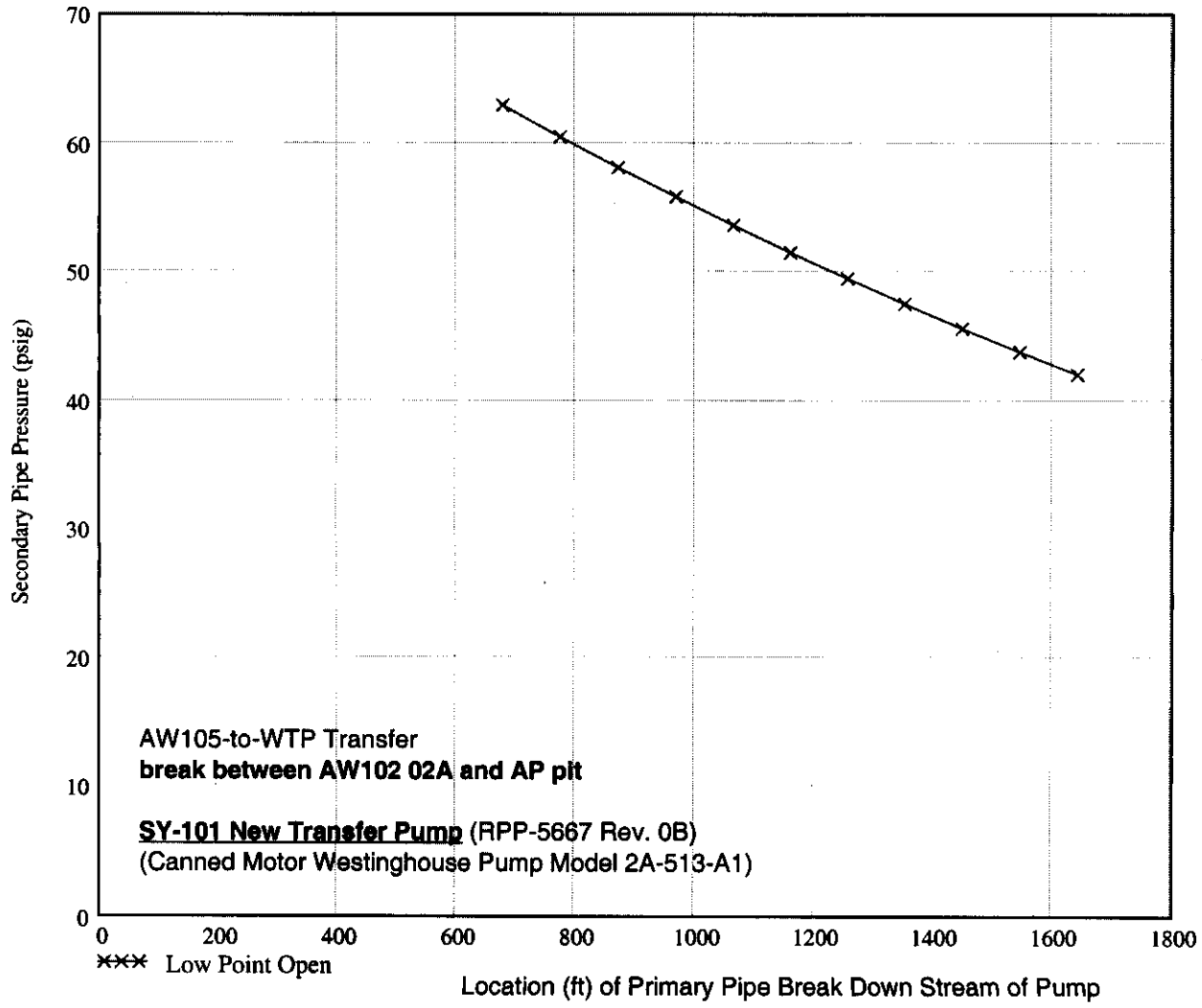

**CH2MHILL Hanford Group, Inc.**

**EVALUATION ANALYSIS**

Calc. No. RPP-LJJ-005
Revision: 0
Page No. 17 of 22

Client: CH2M Hill Hanford Group, Inc.
Subject: Secondary Encasement Pipe Pressure Due to Primary Pipe Break in Waste Tank Cross-Site Transfer Piping System
Location: 200 Area - Hanford Site, Richland, Washington

WO/Job No. _____
Date: 9/12/2001 By: L. J. Julyk
Checked: 9/25/01 By: [illegible]
Revised: _____ By: _____

**Supernate Transfer**

**Case 3 break between AP pit and AP A pit**

$L_o := L_{W105.05A_APpit}$ $L_o = 1643\,ft$ start distance from pump of secondary encasement section under consideration

$H_o := Z_{APpit} - Z_{AW105.05A}$ $H_o = -7.89\,ft$ change in elevation of primary pipe from pump to point $L_o$

$L_S := L_{APpit_APApit}$ $L_S = 655\,ft$ length of secondary encasement section under consideration between drains

$H_S := Z_{APApit} - Z_{AW105.05A}$ $H_S = -10.5\,ft$ change in elevation of primary pipe from pump to point $L_o + L_S$

**use W314 guide/anchor**

Subcase X11 (low and high point drain, $F_{D6} = 1$ and $F_{D9} = 1$)*,
X10 (high point drain, FD6 = 1 and FD9 = 0)*,
X01 (low point drain, FD6 = 0 and FD9 = 1)

$D_{Di} = 1.61\,in$

**Initial guesses (X01)** $Q := 271 \cdot gpm$ $V_1 := \frac{Q}{A_P}$ $V_1 = 11.761\,\frac{ft}{sec}$ low velocities

$\boxed{F_K := 3}$ $F_{D3} = 0$ $F_{D6} := 0$ $F_{D9} := 1$

High point drain open

$H_{P01} := H'_p(Q)$ pump head $H_{P01} = 332\,ft$

$p_2 := 71 \cdot psi$ primary pipe pressure just up stream of break

$p_3 := 72 \cdot psi$ primary pipe pressure just down stream of break

$p_5 := 30 \cdot psi$ secondary pipe pressure just up stream of break

$p_6 := 21 \cdot psi$ secondary pipe pressure at drain up stream of break

$p_8 := 30 \cdot psi$ secondary pipe pressure just down stream of break

$p_9 := 13 \cdot psi$ secondary pipe pressure at drain down stream of break

$V_5 := \frac{V_1 \cdot F_{D6} + \Delta V}{3.7}$

$V_6 := V_5 \cdot \frac{A_{S6}(F_K)}{A_f(D_{Di})}$ $\frac{A_{S6}(F_K)}{A_P} = 2.607$

$V_8 := \frac{V_1 \cdot F_{D9} + \Delta V}{4.4}$ $\frac{A_{S6}(F_K)}{A_f(D_{Di})} = 9.46$

$V_9 := V_8 \cdot \frac{A_{S6}(F_K)}{A_f(D_{Di})}$

$p_c := 6 \cdot psi$ apply conservation of mass (continuity) at break

$V_3 := V_1 - \frac{A_{S6}(F_K)}{A_P} \cdot (V_5 + V_8)$ $V_3 = 4.66\,\frac{ft}{sec}$

$V_c := \frac{A_{S6}(F_K)}{A_{crack}(L_c, W_c)} \cdot (V_5 + V_8)$ $V_c = 52.5\,\frac{ft}{sec}$

$p_{01} := (p_2\ p_3\ p_5\ p_6\ p_8\ p_9\ p_c)^T$
0 1 2 3 4 5 6

$V_{01} := (V_1\ V_3\ V_5\ V_6\ V_8\ V_9\ V_c)^T$
0 1 2 3 4 5 6

**CH2MHILL Hanford Group, Inc.**

**EVALUATION ANALYSIS**

Calc. No. RPP-LJJ-005
Revision: 0
Page No. 18 of 22

Client: CH2M Hill Hanford Group, Inc.
Subject: Secondary Encasement Pipe Pressure Due to Primary Pipe Break in Waste Tank Cross-Site Transfer Piping System
Location: 200 Area - Hanford Site, Richland, Washington

WO/Job No. _____
Date: 9/12/2001 By: L. J. Julyk
Checked: 9/25/01 By: R. Nelson
Revised: _____ By: _____

**Case 3 (X01)**

Input==========

**SY-101 New Transfer Pump** (RPP-5667 Rev. 0B)
(Canned Motor Westinghouse Pump Model 2A-513-A1)

$L_o = 1643\,ft$ $\quad H = -22\,ft$ $\quad \varepsilon_P = 2\,mil$

$L_S = 655\,ft$ $\quad \rho = 1.3\,\frac{kg}{liter}$ $\quad Z = 22.9\,ft$ $\quad \varepsilon_S = 5\,mil$ $\quad D_{LDo_{F_K}} = 0\,in$ $\quad F_K = 3$

$L_P = 5905\,ft$ $\quad F_{D3} = 0$ $\quad \varepsilon_D = 5\,mil$ $\quad L_c = 10\,in$

$x_B := 0 \cdot ft + L_o$ $\quad t_C = 60\ ^{\circ}C$ $\quad D_{Di} = 1.61\,in$ $\quad \Delta Z_D = -1\,ft$ $\quad L_D(D_{Di}, F_K) = 7.025\,ft$ $\quad W_c = 0.1\,in$

$F_{D6} := 0$ $\quad F_{D9} := 1$ $\quad J(F_K, L_o, x_B) = 0$ $\quad N(F_K, L_o, L_S, x_B) = 5$ $\quad \varepsilon_c = 1\,mil$

$I(F_K, L_o, x_B) = 0$ $\quad M(F_K, L_o, L_S, x_B) = 68$

$$\begin{pmatrix} h_{P01} \\ P_{01} \\ v_{01} \end{pmatrix} := ff(L_o, H_o, L_S, H_S, x_B, \rho, t_C, \varepsilon_P, \varepsilon_S, \varepsilon_D, D_{Di}, F_K, F_{D3}, F_{D6}, F_{D9}, \Delta Z_D, L_P, H, Z, L_c, W_c, \varepsilon_c, H_{P01}, p_{01}, V_{01})$$

$$\begin{pmatrix} P_2 \\ P_3 \\ P_5 \\ P_6 \\ P_8 \\ P_9 \\ P_{crack} \end{pmatrix} := P_{01} \quad \begin{pmatrix} v_1 \\ v_3 \\ v_5 \\ v_6 \\ v_8 \\ v_9 \\ v_{crack} \end{pmatrix} := v_{01} \qquad P_{01} = \begin{pmatrix} 132.529 \\ 132.944 \\ 54.692 \\ 38.44 \\ 54.575 \\ 24.736 \\ 11.066 \end{pmatrix} psi \quad v_{01} = \begin{pmatrix} 9.547 \\ 6.621 \\ 0 \\ 43.077 \\ 3.663 \\ 34.667 \\ 70.577 \end{pmatrix} ft\,sec^{-1}$$

Results----------

$h_{P01} = 404\,ft$ $\quad \mu(\rho, t_C) = 1.197\,cP$ $\quad L_{i_{F_K}} = 9\,ft$ $\quad L_{j_{F_K}} = 135\,ft$

$P_2 = 132.5\,psi$ $\quad v_1 = 9.5\,ft\,sec^{-1}$ $\quad A_P \cdot v_1 = 220\,gpm$ $\quad D_{Di} = 1.61\,in$

$P_3 = 132.9\,psi$ $\quad F_{D3} \cdot v_3 = 0\,ft\,sec^{-1}$ $\quad F_{D3} \cdot A_P \cdot v_3 = 0\,gpm$

$P_5 = 54.7\,psi$ $\quad v_5 = 0\,ft\,sec^{-1}$ $\quad A_{S6}(F_K) \cdot v_5 = 0\,gpm$

$P_6 = 38.4\,psi$ $\quad F_{D6} \cdot v_6 = 0\,ft\,sec^{-1}$ $\quad F_{D6} \cdot A_f(D_{Di}) \cdot v_6 = 0\,gpm$

$P_8 = 54.6\,psi$ $\quad v_8 = 3.7\,ft\,sec^{-1}$ $\quad A_{S6}(F_K) \cdot v_8 = 220\,gpm$

$P_9 = 24.7\,psi$ $\quad F_{D9} \cdot v_9 = 34.7\,ft\,sec^{-1}$ $\quad F_{D9} \cdot A_f(D_{Di}) \cdot v_9 = 220\,gpm$

$P_{crack} = 11.1\,psi$ $\quad v_1 \cdot A_P = F_{D3} \cdot A_P \cdot v_3 + A_{S6}(F_K) \cdot v_5 + A_{S6}(F_K) \cdot v_8 = 220\,gpm$

(continuity check at break, OK)

$v_{crack} = 70.6\,ft\,sec^{-1}$

$R_e(D_{H_crack}(L_c, W_c), v_{crack}, \rho, \mu(\rho, t_C)) = 1 \times 10^5$

$P_2 - P_5 = 77.837\,psi$

**CH2MHILL Hanford Group, Inc.**

**EVALUATION ANALYSIS**

Calc. No. RPP-LJJ-005
Revision: 0
Page No. 19 of 22

Client: CH2M Hill Hanford Group, Inc.
Subject: Secondary Encasement Pipe Pressure Due to Primary Pipe Break in Waste Tank Cross-Site Transfer Piping System
Location: 200 Area - Hanford Site, Richland, Washington

WO/Job No. _____
Date: 9/12/2001 By: L. J. Julyk
Checked: 9/25/01 By: [illegible]
Revised: _____ By: _____

**Figure 1d. Case 3: Maximum Pressure in AW105-WTP Encasement Pipe Due to Primary Pipe Break (Between AP pit and AP A Pit) within Encasement Section of Length $L_s$ Starting at $L_o$ Relative to Transfer Pump for Supernate Waste Transfer at Temperature of 60 °C.**

$F_K = 3$ Low point drain $L_c = 10\,in$

$Z = 22.9\,ft$ $t_C = 60\,°C$ $\rho = 1.3\,\frac{kg}{liter}$ $\mu(\rho, t_C) = 1.197\,cP$ $D_{LDo_{F_K}} = 0\,in$ $D_{Di} = 1.61\,in$ $W_c = 0.1\,in$

$H = -22.1\,ft$ $L_o = 1643\,ft$ $L_S = 655\,ft$ $L_P = 5905\,ft$ $L_{i_{F_K}} = 9\,ft$ $\varepsilon_P = 2\,mil$ $L_D(D_{Di}, F_K) = 7\,ft$ $\varepsilon_c = 1\,mil$

$\Delta Z_D = -1\,ft$ $H_o = -7.89\,ft$ $H_S = -10.5\,ft$ $F_{D3} = 0$ $L_{j_{F_K}} = 135\,ft$ $\varepsilon_S = 5\,mil$ $\varepsilon_D = 5\,mil$

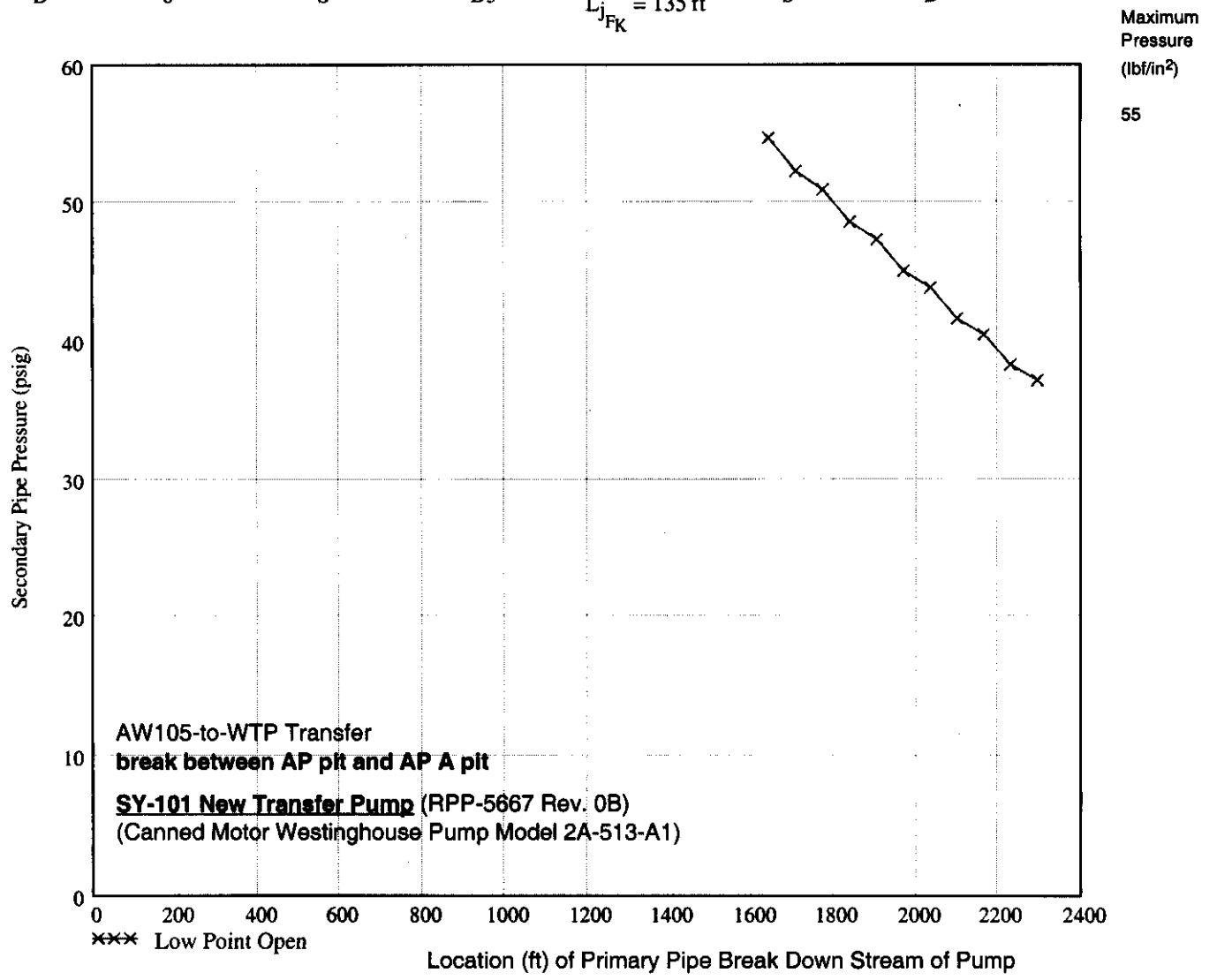

**CH2MHILL Hanford Group, Inc.**

**EVALUATION ANALYSIS**

Calc. No. RPP-LJJ-005
Revision: 0
Page No. 20 of 22

Client: CH2M Hill Hanford Group, Inc.
Subject: Secondary Encasement Pipe Pressure Due to Primary Pipe Break in Waste Tank Cross-Site Transfer Piping System
Location: 200 Area - Hanford Site, Richland, Washington

WO/Job No. _____
Date: 9/12/2001 By: L. J. Julyk
Checked: 9/25/01 By: R. J. Sollorne
Revised: _____ By: _____

**Supernate Transfer**

**Case 4 break between AP A pit and WTP interface**

| | | |
|---|---|---|
| $L_o := L_{W105.05A_APApit}$ | $L_o = 2298\,ft$ | start distance from pump of secondary encasement section under considerat |
| $H_o := Z_{APApit} - Z_{AW105.05A}$ | $H_o = -10.5\,ft$ | change in elevation of primary pipe from pump to point $L_o$ |
| $L_S := L_{APApit_WTPinterface}$ | $L_S = 2723\,ft$ | length of secondary encasement section under consideration between drains |
| $H_S := Z_{WTPinterface} - Z_{AW105.05A}$ | $H_S = -22.1\,ft$ | change in elevation of primary pipe from pump to point $L_o + L_S$ |

**use W314 guide/anchor**

Subcase X11 (low and high point drain, $F_{D6} = 1$ and $F_{D9} = 1$)*,
X10 (high point drain, FD6 = 1 and FD9 = 0)*,
X01 (low point drain, FD6 = 0 and FD9 = 1)

$D_{Di} = 1.61\,in$

**Initial guesses (X01)** $Q := 249.4 \cdot gpm$ $V_1 := \frac{Q}{A_P}$ $V_1 = 10.824\,\frac{ft}{sec}$ low velocities

$F_K = 3$ $F_{D3} = 0$ $F_{D6} := 0$ $F_{D9} := 1$

Low point drain open

$H_{P01} := H'_p(Q)$ pump head $H_{P01} = 364\,ft$

$p_2 := 67 \cdot psi$ primary pipe pressure just up stream of break

$p_3 := 67 \cdot psi$ primary pipe pressure just down stream of break

$p_5 := 37 \cdot psi$ secondary pipe pressure just up stream of break

$p_6 := 26 \cdot psi$ secondary pipe pressure at drain up stream of break

$p_8 := 37 \cdot psi$ secondary pipe pressure just down stream of break

$p_9 := 9 \cdot psi$ secondary pipe pressure at drain down stream of break

$V_5 := \frac{V_1 \cdot F_{D6} + \Delta V}{50}$

$V_6 := V_5 \cdot \frac{A_{S6}(F_K)}{A_f(D_{Di})}$ $\frac{A_{S6}(F_K)}{A_P} = 2.607$

$V_8 := \frac{V_1 \cdot F_{D9} + \Delta V}{4.8}$ $\frac{A_{S6}(F_K)}{A_f(D_{Di})} = 9.46$

$V_9 := V_8 \cdot \frac{A_{S6}(F_K)}{A_f(D_{Di})}$

$p_c := 20 \cdot psi$ apply conservation of mass (continuity) at break

$V_3 := V_1 - \frac{A_{S6}(F_K)}{A_P} \cdot (V_5 + V_8)$ $V_3 = 4.89\,\frac{ft}{sec}$

$V_c := \frac{A_{S6}(F_K)}{A_{crack}(L_c, W_c)} \cdot (V_5 + V_8)$ $V_c = 43.9\,\frac{ft}{sec}$

$p_{01} := (p_2\ p_3\ p_5\ p_6\ p_8\ p_9\ p_c)^T$
0 1 2 3 4 5 6

$V_{01} := (V_1\ V_3\ V_5\ V_6\ V_8\ V_9\ V_c)^T$
0 1 2 3 4 5 6

**CH2MHILL Hanford Group, Inc.**

**EVALUATION ANALYSIS**

Calc. No. RPP-LJJ-005
Revision: 0
Page No. 21 of 22

Client: CH2M Hill Hanford Group, Inc.
Subject: Secondary Encasement Pipe Pressure Due to Primary Pipe Break in Waste Tank Cross-Site Transfer Piping System
Location: 200 Area - Hanford Site, Richland, Washington

WO/Job No. _____
Date: 9/12/2001 By: L. J. Julyk
Checked: 9/25/01 By: R. Sellone
Revised: _____ By: _____

**Case 4 (X01)**

Input==========

**SY-101 New Transfer Pump** (RPP-5667 Rev. 0B)
(Canned Motor Westinghouse Pump Model 2A-513-A1)

$L_o = 2298\,ft$ $\quad H = -22\,ft$ $\quad \varepsilon_P = 2\,mil$

$\boxed{L_S = 2723\,ft}$ $\quad \rho = 1.3\,\frac{kg}{liter}$ $\quad Z = 22.9\,ft$ $\quad \varepsilon_S = 5\,mil$ $\quad D_{LDo_{F_K}} = 0\,in$ $\quad F_K = 3$

$L_P = 5905\,ft$ $\quad F_{D3} = 0$ $\quad \varepsilon_D = 5\,mil$

$\boxed{x_B := 0 \cdot ft + L_o}$ $\quad t_C = 60\,°C$ $\quad D_{Di} = 1.61\,in$ $\quad \Delta Z_D = -1\,ft$ $\quad L_D(D_{Di}, F_K) = 7.025\,ft$ $\quad L_c = 10\,in$ $\quad W_c = 0.1\,in$ $\quad \varepsilon_c = 1\,mil$

$F_{D6} := 0$ $\quad F_{D9} := 1$ $\quad J(F_K, L_o, x_B) = 0$ $\quad N(F_K, L_o, L_S, x_B) = 20$

$I(F_K, L_o, x_B) = 0$ $\quad M(F_K, L_o, L_S, x_B) = 283$

$$\begin{pmatrix} h_{P01} \\ P_{01} \\ v_{01} \end{pmatrix} := ff(L_o, H_o, L_S, H_S, x_B, \rho, t_C, \varepsilon_P, \varepsilon_S, \varepsilon_D, D_{Di}, F_K, F_{D3}, F_{D6}, F_{D9}, \Delta Z_D, L_P, H, Z, L_c, W_c, \varepsilon_c, H_{P01}, p_{01}, V_{01})$$

$$\begin{pmatrix} P_2 \\ P_3 \\ P_5 \\ P_6 \\ P_8 \\ P_9 \\ P_{crack} \end{pmatrix} := P_{01} \quad \begin{pmatrix} v_1 \\ v_3 \\ v_5 \\ v_6 \\ v_8 \\ v_9 \\ v_{crack} \end{pmatrix} := v_{01} \qquad P_{01} = \begin{pmatrix} 139.147 \\ 139.303 \\ 77.647 \\ 54.627 \\ 77.554 \\ 19.444 \\ 43.18 \end{pmatrix} psi \quad v_{01} = \begin{pmatrix} 8.486 \\ 7.363 \\ 0 \\ 51.268 \\ 3.256 \\ 30.814 \\ 62.732 \end{pmatrix} ft\,sec^{-1}$$

Results----------

$h_{P01} = 433\,ft$ $\quad \mu(\rho, t_C) = 1.197\,cP$ $\quad L_{i_{F_K}} = 9\,ft$ $\quad L_{j_{F_K}} = 135\,ft$

$P_2 = 139.1\,psi$ $\quad v_1 = 8.5\,ft\,sec^{-1}$ $\quad A_P \cdot v_1 = 195.5\,gpm$ $\quad D_{Di} = 1.61\,in$

$P_3 = 139.3\,psi$ $\quad F_{D3} \cdot v_3 = 0\,ft\,sec^{-1}$ $\quad F_{D3} \cdot A_P \cdot v_3 = 0\,gpm$

$P_5 = 77.6\,psi$ $\quad v_5 = 0\,ft\,sec^{-1}$ $\quad A_{S6}(F_K) \cdot v_5 = 0\,gpm$

$P_6 = 54.6\,psi$ $\quad F_{D6} \cdot v_6 = 0\,ft\,sec^{-1}$ $\quad F_{D6} \cdot A_f(D_{Di}) \cdot v_6 = 0\,gpm$

$P_8 = 77.6\,psi$ $\quad v_8 = 3.3\,ft\,sec^{-1}$ $\quad A_{S6}(F_K) \cdot v_8 = 195.5\,gpm$

$P_9 = 19.4\,psi$ $\quad F_{D9} \cdot v_9 = 30.8\,ft\,sec^{-1}$ $\quad F_{D9} \cdot A_f(D_{Di}) \cdot v_9 = 195.5\,gpm$

$P_{crack} = 43.2\,psi$ $\quad v_1 \cdot A_P = F_{D3} \cdot A_P \cdot v_3 + A_{S6}(F_K) \cdot v_5 + A_{S6}(F_K) \cdot v_8 = 195.5\,gpm$

(continuity check at break, OK)

$v_{crack} = 62.7\,ft\,sec^{-1}$

$R_e(D_{H_crack}(L_c, W_c), v_{crack}, \rho, \mu(\rho, t_C)) = 1 \times 10^5$

$P_2 - P_5 = 61.5\,psi$

**CH2MHILL Hanford Group, Inc.**

**EVALUATION ANALYSIS**

Calc. No. RPP-LJJ-005
Revision: 0
Page No. 22 of 22

Client: CH2M Hill Hanford Group, Inc.
Subject: Secondary Encasement Pipe Pressure Due to Primary Pipe Break in Waste Tank Cross-Site Transfer Piping System
Location: 200 Area - Hanford Site, Richland, Washington

WO/Job No. _____
Date: 9/12/2001 By: L. J. Julyk
Checked: 9/25/01 By: [illegible]
Revised: _____ By: _____

**Figure 1e. Case 4: Maximum Pressure in AW105-WTP Encasement Pipe Due to Primary Pipe Break (Between AP A pit and WTP Interface) within Encasement Section of Length $L_s$ Starting at $L_o$ Relative to Transfer Pump for Supernate Waste Transfer at Temperature of 60 °C.**

$F_K = 3$

$Z = 22.9\,ft$ $t_C = 60\ ^{\circ}C$ $\rho = 1.3\,\frac{kg}{liter}$ $\mu(\rho, t_C) = 1.197\,cP$

Low point drain: $D_{LDo_{F_K}} = 0\,in$ $D_{Di} = 1.61\,in$

$H = -22.1\,ft$ $L_o = 2298\,ft$ $L_S = 2723\,ft$ $L_P = 5905\,ft$ $L_{i_{F_K}} = 9\,ft$ $\varepsilon_P = 2\,mil$ $L_D(D_{Di}, F_K) = 7\,ft$

$\Delta Z_D = -1\,ft$ $H_o = -10.5\,ft$ $H_S = -22.1\,ft$ $F_{D3} = 0$ $L_{j_{F_K}} = 135\,ft$ $\varepsilon_S = 5\,mil$ $\varepsilon_D = 5\,mil$

$L_c = 10\,in$
$W_c = 0.1\,in$
$\varepsilon_c = 1\,mil$

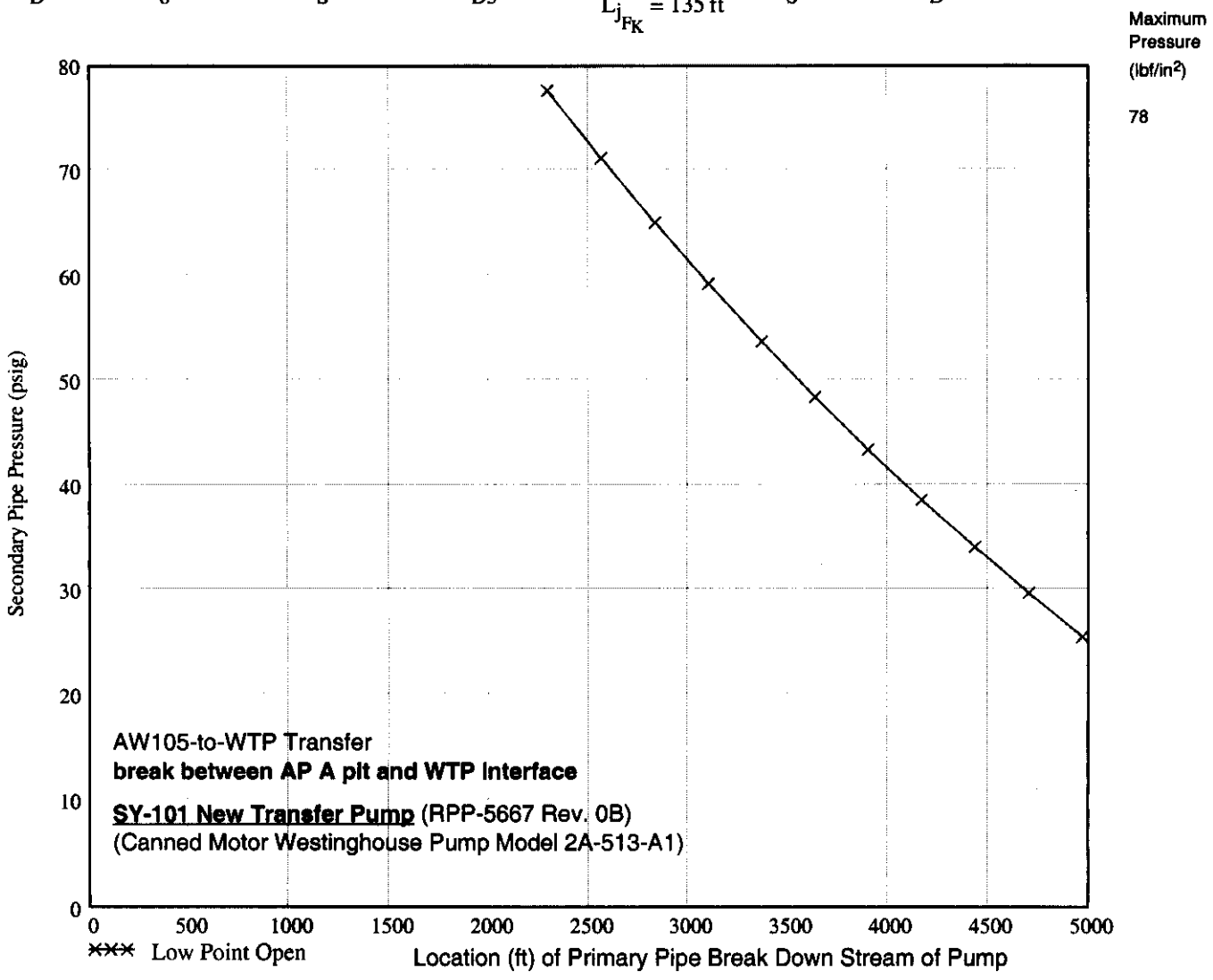

# APPENDIX C1

# INFRASTRUCTURE ENCASEMENT PIPE MAXIMUM PRESSURE ANALYSIS

# OPEN TRANSFER ROUTE

This page intentionally left blank

**CH2MHILL Hanford Group, Inc.**

**EVALUATION ANALYSIS**

Calc. No. RPP-LJJ-005
Revision: 0
Page No. 1 of 22

Client: CH2M Hill Hanford Group, Inc.
Subject: Secondary Encasement Pipe Pressure Due to Primary Pipe Break in Waste Tank Cross-Site Transfer Piping System
Location: 200 Area - Hanford Site, Richland, Washington

WO/Job No. _____
Date: 9/12/2001 By: L. J. Julyk
Checked: 9/25/01 By: [signature]
Revised: _____ By: _____

Reference:C:\WINDOWS\Desktop\FY2001\Waste Transfer System\Encasement Pressure Issue\Cross-Site Encasement Calcs\pipebreak.r

**Input Parameter Data**

**AW105 to WTP Elevation and Equivalent Pipe Length Parameters**

Elevations

$Z_{AW105.05A} := 684.5 \cdot ft$ elevation at AW105 05A Transfer Pump Pit

$Z_{AWA} := 685.35 \cdot ft$ elevation at AWA

$Z_{AW102.02A} := 684.5 \cdot ft$ elevation at AW102 02A

$Z_{APpit} := 676.61 \cdot ft$ elevation at AP pit

$Z_{APApit} := 674 \cdot ft$ elevation at AP-A pit (new)

$Z_{WTPinterface} := 662.4 \cdot ft$ elevation at WTP interface

$Z_{WTP} := 707.44 \cdot ft$ elevation at WTP in-plant

Equivalent pipe length between points

$L_{AW105.05A_AWA} := (108 + 240) \cdot ft$

$L_{AWA_AW102.02A} := (205 + 124) \cdot ft$

$L_{AW102.02A_APpit} := (205 + 761) \cdot ft$

$L_{APpit_APApit} := (205 + 450) \cdot ft$

$L_{APApit_WTPinterface} := (205 + 3518 - 1000) \cdot ft$

$L_{WTPinterface_WTP} := (884) \cdot ft$

$L_{W105.05A_AW102.02A} := L_{AW105.05A_AWA} + L_{AWA_AW102.02A}$ $\quad L_{W105.05A_AW102.02A} = 677\,ft$

$L_{W105.05A_APpit} := L_{W105.05A_AW102.02A} + L_{AW102.02A_APpit}$ $\quad L_{W105.05A_APpit} = 1643\,ft$

$L_{W105.05A_APApit} := L_{W105.05A_APpit} + L_{APpit_APApit}$ $\quad L_{W105.05A_APApit} = 2298\,ft$

$L_{W105.05A_WTPinterface} := L_{W105.05A_APApit} + L_{APApit_WTPinterface}$ $\quad L_{W105.05A_WTPinterface} = 5021\,ft$

$L_P := L_{W105.05A_WTPinterface} + L_{WTPinterface_WTP}$ $\quad L_P = 5905\,ft$

$$Z_{AW_tank_bottom} := \left(631.5 + \frac{3}{8} \cdot \frac{1}{12} + \frac{8}{12} + \frac{0.5}{12}\right) \cdot ft \qquad Z_{AW_full} := Z_{AW_tank_bottom} + 422 \cdot in$$

(H-2-70394)

$\Delta H_{pump} := Z_{AW105.05A} - Z_{AW_full}$

$\Delta H_{pump} = 17.094\,ft$

**CH2MHILL Hanford Group, Inc.**

**EVALUATION ANALYSIS**

Calc. No. RPP-LJJ-005
Revision: 0
Page No. 2 of 22

Client: CH2M Hill Hanford Group, Inc.
Subject: Secondary Encasement Pipe Pressure Due to Primary Pipe Break in Waste Tank Cross-Site Transfer Piping System
Location: 200 Area - Hanford Site, Richland, Washington

WO/Job No. _____
Date: 9/12/2001 By: L. J. Julyk
Checked: 9/25/01 By: [illegible]
Revised: _____ By: _____

**AW105 to WTP Cases**

**assume all drains 1-1/2-in. to bound other transfer routes**

Case 0 break between AW105 05A and AWA

$L_o := 0 \cdot ft$ $\quad L_o = 0\,ft$

$H_o := 0 \cdot ft$ $\quad H_o = 0\,ft$

$L_S := L_{AW105.05A_AWA}$ $\quad L_S = 348\,ft$

$H_S := Z_{AWA} - Z_{AW105.05A}$ $\quad H_S = 0.85\,ft$

Subcase X11 (low and high point drain, $F_{D6} = 1$ and $F_{D9} = 1$)*,
X10 (low point drain, FD6 = 1 and FD9 = 0),
X01 (high point drain, FD6 = 0 and FD9 = 1)*
2-in.drain low point drain

Case 1 break between AWA and AW102 02A

$L_o := L_{AW105.05A_AWA}$ $\quad L_o = 348\,ft$

$H_o := Z_{AWA} - Z_{AW105.05A}$ $\quad H_o = 0.85\,ft$

$L_S := L_{AWA_AW102.02A}$ $\quad L_S = 329\,ft$

$H_S := Z_{AW102.02A} - Z_{AW105.05A}$ $\quad H_S = 0\,ft$

Subcase X11 (low and high point drain, $F_{D6} = 1$ and $F_{D9} = 1$)*,
X10 (high point drain, FD6 = 1 and FD9 = 0)*,
X01 (low point drain, FD6 = 0 and FD9 = 1)
1 1/2-in.drain low point drain

Case 2 break between AW102 02A and AP pit

$L_o := L_{W105.05A_AW102.02A}$ $\quad L_o = 677\,ft$

$H_o := Z_{AW102.02A} - Z_{AW105.05A}$ $\quad H_o = 0\,ft$

$L_S := L_{AW102.02A_APpit}$ $\quad L_S = 966\,ft$

$H_S := Z_{APpit} - Z_{AW105.05A}$ $\quad H_S = -7.89\,ft$

Subcase X11 (low and high point drain, $F_{D6} = 1$ and $F_{D9} = 1$)*,
X10 (high point drain, FD6 = 1 and FD9 = 0)*,
X01 (low point drain, FD6 = 0 and FD9 = 1)
2-in.drain low point drain

Case 3 break between AP pit and AP A pit

$L_o := L_{W105.05A_APpit}$ $\quad L_o = 1643\,ft$

$H_o := Z_{APpit} - Z_{AW105.05A}$ $\quad H_o = -7.89\,ft$

$L_S := L_{APpit_APApit}$ $\quad L_S = 655\,ft$

$H_S := Z_{APApit} - Z_{AW105.05A}$ $\quad H_S = -10.5\,ft$

Subcase X11 (low and high point drain, $F_{D6} = 1$ and $F_{D9} = 1$)*,
X10 (high point drain, FD6 = 1 and FD9 = 0)*,
X01 (low point drain, FD6 = 0 and FD9 = 1)
2-in.drain low point drain

Case 4 break between AP A pit and WTP interface

$L_o := L_{W105.05A_APApit}$ $\quad L_o = 2298\,ft$

$H_o := Z_{APApit} - Z_{AW105.05A}$ $\quad H_o = -10.5\,ft$

$L_S := L_{APApit_WTPinterface}$ $\quad L_S = 2723\,ft$

$H_S := Z_{WTPinterface} - Z_{AW105.05A}$ $\quad H_S = -22.1\,ft$

Subcase X11 (low and high point drain, $F_{D6} = 1$ and $F_{D9} = 1$)*,
X10 (high point drain, FD6 = 1 and FD9 = 0)*,
X01 (low point drain, FD6 = 0 and FD9 = 1)
2-in.drain low point drain

* would require additional drain/relief valve at other end of line segment

X = 1 for FD3 = 1 (primary pipe downstream flow open)
0 for FD3 = 0 (primary pipe downstream flow blocked)

Client: CH2M Hill Hanford Group, Inc. WO/Job No. _____
Subject: Secondary Encasement Pipe Pressure Due to Primary Pipe Break in Waste Tank Cross-Site Transfer Piping System
Date: 9/12/2001 By: L. J. Julyk
Checked: 9/25/01 By: R. R. Moore
Location: 200 Area - Hanford Site, Richland, Washington
Revised: _____ By: _____

$F_K$ selects primary pipe internal support parameters in annulus
= 0 for existing in-Farm piping (no leak detection cable, no anchors)
= 1 for W058 and W314 extension of W058 (with leak detection cable 2-in. thk anchor, no radius in anchor slots)
= 2 for W058 and W314 extension of W058 (leak detection cable 2-in. thk anchor, with radius in anchor slots)
= 3 for new in-Farm W314 piping (1-in. thk anchor, with radius in anchor slots)

$D_{Di}$ internal pipe diameter of drain
= 1.5 or 2 inches for existing in-Farm piping (no rupture disks)
= 2 inches for W058 and W314 extension of W058 (with rupture disks)
= 2 inches for new in-Farm W314 piping (no rupture disks)

$F_{D3}$ $F_{D6}$ $F_{D9}$ switch to block (= 0) or open (= 1) flow downstream of break and drain location 6 or 9, respectively

$L_P$ total equivalent length of primary pipe from pump to discharge exit

$L_P = 5905\,ft$ $L_P = 1.118\,mi$

$H := Z_{WTPinterface} - Z_{AW105.05A}$ change in elevation of primary pipe from pump to point just before vertical increase in elevation at end of primary pipe at discharge to tank (see Figure 1) $H = -22\,ft$

$\Delta Z_D := -1 \cdot ft$ approximate change in elevation at drain

$Z := H + 45 \cdot ft$ vertical increase in elevation at end of primary pipe at discharge to tank at WTP $Z = 23\,ft$

Supernate Transfer
Case 4 break between AP A pit and WTP interface

$L_o := L_{W105.05A_APApit}$ $L_o = 2298\,ft$ start distance from pump of secondary encasement section under consideration

$H_o := Z_{APApit} - Z_{AW105.05A}$ $H_o = -10.5\,ft$ change in elevation of primary pipe from pump to point $L_o$ $H_o = -10.5\,ft$

$L_S := L_{APApit_WTPinterface}$ $L_S = 2723\,ft$ length of secondary encasement section under consideration between drains

$H_S := Z_{WTPinterface} - Z_{AW105.05A}$ $H_S = -22.1\,ft$ change in elevation of primary pipe from pump to point $L_o + L_S$ $H_S = -22.1\,ft$

$x_B := 1000 \cdot ft + L_o$ distance of break in primary pipe from transfer pump

$H_B(L_o, H_o, L_S, H_S, x_B) = -14.76\,ft$ elevation at assumed break location $x_B$ relative to transfer pump elevation

$t_C$ temperature of waste (°C)

$\rho$ bulk density of waste (kg/L)

Pipe roughness

$\varepsilon_P := 2 \cdot mil$ stainless steel primary pipe

$\varepsilon_S := 5 \cdot mil$ carbon steel secondary (encasement) pipe

$\varepsilon_D := 5 \cdot mil$ carbon steel drain pipe

**CH2MHILL Hanford Group, Inc.**

**EVALUATION ANALYSIS**

Calc. No. RPP-LJJ-005
Revision: 0
Page No. 4 of 22

Client: CH2M Hill Hanford Group, Inc.
Subject: Secondary Encasement Pipe Pressure Due to Primary Pipe Break in Waste Tank Cross-Site Transfer Piping System
Location: 200 Area - Hanford Site, Richland, Washington

WO/Job No. _____
Date: 9/12/2001 By: L. J. Julyk
Checked: 9/25/01 By: [illegible]
Revised: _____ By: _____

Assumed Crack Size Parameters

$D_{LDo} = \begin{pmatrix} 0 \\ 0.31 \\ 0.31 \\ 0 \end{pmatrix}$ in — Existing; W058; W314 — diameter of leak detection cable

$\rho := 1.3 \cdot \frac{kg}{liter}$ $t_C := 60$

$T_F(t_C) = 140$

viscosity $\mu(\rho, t_C) = 1.197\,cP$

$L_c := 10 \cdot in$ crack length

$W_c := 0.1 \cdot in$ crack opening width

$A_{crack}(L_c, W_c) = 1\,in^2$ $\beta_{c1}(L_c, W_c) = 0.368$ $\beta_{c2}(L_c, W_c, D_{LDo}) = \begin{pmatrix} 0.22781 \\ 0.22826 \\ 0.22826 \\ 0.22781 \end{pmatrix}$

$P_{crack}(L_c, W_c) = 20.2\,in$

$D_{H_crack}(L_c, W_c) = 0.198\,in$ effective hydraulic diameter $\alpha_c(L_c, W_c) = 1.091$ $L/D_{oH}$ ratio for crack

$\varepsilon_c := 1 \cdot mil$ primary pipe through crack roughness

$V_c := 10 \cdot \frac{ft}{sec}$ $R_e(D_{H_crack}(L_c, W_c), V_c, \rho, \mu(\rho, t_C)) = 2 \times 10^4$ Reynolds number for flow through crack

thick-edged orifice with $\alpha = L/D_{oH} > 0.015$ $\alpha_c(L_c, W_c) = 1.091$ > 0.15 => thick-edged orifice

Lyons 1982, Eqn 4, pg. 158

$K_{crack}(L_c, W_c, V_c, \rho, t_C, \varepsilon_c, D_{LDo}) = \begin{pmatrix} 1.80719 \\ 1.80671 \\ 1.80671 \\ 1.80719 \end{pmatrix}$

Idelchik 1994, Diagram 4-12, pg. 219

$KK_{crack}(L_c, W_c, V_c, \rho, t_C, \varepsilon_c, D_{LDo}) = \begin{pmatrix} 1.58502 \\ 1.58459 \\ 1.58459 \\ 1.58502 \end{pmatrix}$

shap-edged orifice (Idelchik 1994, pg. 218, $\alpha = L/D_{oH} < 0.015$)

$KKK_{crack}(L_c, W_c, V_c, \rho, t_C, \varepsilon_c, D_{LDo}) = \begin{pmatrix} 2.61664 \\ 2.61598 \\ 2.61598 \\ 2.61664 \end{pmatrix}$

Encasement annulus K-resistance factors for guides and anchors modeled as thick-edged (long) orifice for $\alpha = L/D_{oH} > 0.015$

Lyons 1982, Eqn 4, pg. 158

| | | | | |
|---|---|---|---|---|
| Existing | $F_K := 0$ | $K_{guide}(v, \rho, t_C, \varepsilon, F_K) = 0.083$ | $K_{anchor}(v, \rho, t_C, \varepsilon, F_K) = 0$ | |
| W058 | $F_K := 1$ | $K_{guide}(v, \rho, t_C, \varepsilon, F_K) = 1.912$ | $K_{anchor}(v, \rho, t_C, \varepsilon, F_K) = 17.686$ | 3/4-in. thk no radius in slots |
| | $F_K := 2$ | $K_{guide}(v, \rho, t_C, \varepsilon, F_K) = 1.912$ | $K_{anchor}(v, \rho, t_C, \varepsilon, F_K) = 11.537$ | 3/4-in. thk with radius in slots |
| W314 | $F_K := 3$ | $K_{guide}(v, \rho, t_C, \varepsilon, F_K) = 0.083$ | $K_{anchor}(v, \rho, t_C, \varepsilon, F_K) = 10.696$ | 1-in. thk with radius in slots |

$V_z := 0 \cdot ft \cdot sec^{-1}$ $p_z := 0 \cdot psi$ $g = 32.174\,ft\,sec^{-2}$

$\Delta V := 0.1 \cdot ft\,sec^{-1}$

Apply conservation of mass (continuity) and energy (Bernoulli theorem) between nodes (see Figure 1a of Appendix A) and at the pipe break plus the characteristic pump head relation (see Figure 2 of Appendix A) to model the nonlinear system of equations that govern the steady-state flow behavior resulting from a primary pipe break at location $x_B$ relative to pump.

$H'_p(Q) := H_{NTP}(Q) - \Delta H_{pump}$

**SY-101 New Transfer Pump** (RPP-5667 Rev. 0B)
(Canned Motor Westinghouse Pump Model 2A-513-A1)

**Nonlinear governing system of equations**

Given — apply conservation of mass (continuity) and energy (Bernoulli theorem)

$V_0 \ge V_z \quad V_1 \ge V_z \quad V_2 \ge V_z \quad V_3 \ge V_z \quad V_4 \ge V_z \quad V_5 \ge V_z \quad V_6 \ge V_z$

continuity

$$A_{S6}(F_K) \cdot V_2 = F_{D6} \cdot A_f(D_{Di}) \cdot V_3$$
$$A_{S6}(F_K) \cdot V_4 = F_{D9} \cdot A_f(D_{Di}) \cdot V_5$$
$$A_P \cdot V_0 = A_P \cdot V_1 \cdot F_{D3} + A_{crack}(L_c, W_c) \cdot V_6$$
$$A_{crack}(L_c, W_c) \cdot V_6 = A_{S6}(F_K) \cdot (V_2 + V_4)$$

$H_P = H'_p(A_P \cdot V_0)$ — pump head curve

Bernoulli (between nodes, see Figure 1a of Appendix A)

$$\left[H_P - f\left(R_e(D_{Pi}, V_0, \rho, \mu(\rho, t_C)), \frac{\varepsilon_P}{D_{Pi}}\right) \cdot \frac{x_B}{D_{Pi}} \cdot \frac{(V_0)^2}{2 \cdot g}\right] = \left(\frac{p_0}{\rho \cdot g} + H_B(L_o, H_o, L_S, H_S, x_B)\right) \qquad \text{1-2}$$

$$\left[\frac{p_0}{\rho \cdot g} + \frac{(V_0)^2}{2 \cdot g}\right] = \left[\frac{p_1}{\rho \cdot g} + \frac{(V_1)^2}{2 \cdot g}\right] \qquad \text{2-3}$$

$$\left[\frac{p_1}{\rho \cdot g} + \left(1 - f\left(R_e(D_{Pi}, V_1, \rho, \mu(\rho, t_C)), \frac{\varepsilon_P}{D_{Pi}}\right) \cdot \frac{L_P - x_B}{D_{Pi}} - K_E\right) \cdot \frac{(V_1)^2}{2 \cdot g} + H_B(L_o, H_o, L_S, H_S, x_B)\right] = \left[\frac{(V_1)^2}{2 \cdot g} + H + Z\right] \qquad \text{3-4}$$

$$\left[\frac{p_0}{\rho \cdot g} + \frac{(V_0)^2}{2 \cdot g}\right] = \left[\frac{p_6}{\rho \cdot g} + \frac{(V_6)^2}{2 \cdot g} + K_{crack}\left(L_c, W_c, V_6, \rho, t_C, \varepsilon_c, D_{LDo_{F_K}}\right) \cdot \frac{(V_6)^2}{2 \cdot g}\right] \qquad \text{2-crack}$$

$$\left[\frac{p_6}{\rho \cdot g} + \frac{(V_6)^2}{2 \cdot g}\right] = \left[\frac{p_2}{\rho \cdot g} + \frac{(V_2)^2}{2 \cdot g}\right] \qquad \text{crack-5}$$

**CH2MHILL Hanford Group, Inc.**

**EVALUATION ANALYSIS**

Calc. No. RPP-LJJ-005
Revision: 0
Page No. 6 of 22

Client: CH2M Hill Hanford Group, Inc.
Subject: Secondary Encasement Pipe Pressure Due to Primary Pipe Break in Waste Tank Cross-Site Transfer Piping System
Location: 200 Area - Hanford Site, Richland, Washington

WO/Job No. _____
Date: 9/12/2001 By: L. J. Julyk
Checked: 9/25/01 By: [illegible]
Revised: _____ By: _____

$$\left[\begin{array}{l}\dfrac{p_2}{\rho\cdot g}+H_B(L_o,H_o,L_S,H_S,x_B)-f\left(R_e\left(D_{H_a6}(F_K),V_2,\rho,\mu(\rho,t_C)\right),\dfrac{\varepsilon_S}{D_{H_a6}(F_K)}\right)\cdot\dfrac{x_B-L_o}{D_{H_a6}(F_K)}\cdot\dfrac{(V_2)^2}{2\cdot g}\ldots \\ +\left[1-\left(\begin{array}{l}I(F_K,L_o,x_B)\cdot K_{guide}(V_2,\rho,t_C,\varepsilon_S,F_K)\ldots \\ +J(F_K,L_o,x_B)\cdot K_{anchor}(V_2,\rho,t_C,\varepsilon_S,F_K)+K_D\left(D_{Di},D_{LDo_{F_K}}\right)\end{array}\right)\right]\cdot\dfrac{(V_2)^2}{2\cdot g}\end{array}\right]=\left[\begin{array}{l}\dfrac{p_3}{\rho\cdot g}\ldots \\ +\dfrac{(V_3)^2}{2\cdot g}\ldots \\ +H_o\end{array}\right] \quad \text{5-6}$$

$$\left[\frac{p_3}{\rho\cdot g}+\left(1-f\left(R_e\left(D_{Di},V_3,\rho,\mu(\rho,t_C)\right),\frac{\varepsilon_D}{D_{Di}}\right)\cdot\frac{L_D(D_{Di},F_K)}{D_{Di}}-K_E\right)\cdot\frac{(V_3)^2}{2\cdot g}\right]=\frac{(V_3)^2}{2\cdot g}+\Delta Z_D \quad \text{6-7}$$

$$\left[\frac{p_6}{\rho\cdot g}+\frac{(V_6)^2}{2\cdot g}\right]=\left[\frac{p_4}{\rho\cdot g}+\frac{(V_4)^2}{2\cdot g}\right] \quad \text{crack-8}$$

$$\left[\begin{array}{l}\dfrac{p_4}{\rho\cdot g}+H_B(L_o,H_o,L_S,H_S,x_B)-f\left(R_e\left(D_{H_a6}(F_K),V_4,\rho,\mu(\rho,t_C)\right),\dfrac{\varepsilon_S}{D_{H_a6}(F_K)}\right)\cdot\dfrac{L_S-(x_B-L_o)}{D_{H_a6}(F_K)}\cdot\dfrac{(V_4)^2}{2\cdot g}\ldots \\ +\left[1-\left(\begin{array}{l}M(F_K,L_o,L_S,x_B)\cdot K_{guide}(V_4,\rho,t_C,\varepsilon_S,F_K)\ldots \\ +N(F_K,L_o,L_S,x_B)\cdot K_{anchor}(V_4,\rho,t_C,\varepsilon_S,F_K)+K_D\left(D_{Di},D_{LDo_{F_K}}\right)\end{array}\right)\right]\cdot\dfrac{(V_4)^2}{2\cdot g}\end{array}\right]=\left[\begin{array}{l}\dfrac{p_5}{\rho\cdot g}\ldots \\ +\dfrac{(V_5)^2}{2\cdot g}\ldots \\ +H_S\end{array}\right] \quad \text{8-9}$$

$$\left[\frac{p_5}{\rho\cdot g}+\left(1-f\left(R_e\left(D_{Di},V_5,\rho,\mu(\rho,t_C)\right),\frac{\varepsilon_D}{D_{Di}}\right)\cdot\frac{L_D(D_{Di},F_K)}{D_{Di}}-K_E\right)\cdot\frac{(V_5)^2}{2\cdot g}\right]=\frac{(V_5)^2}{2\cdot g}+\Delta Z_D \quad \text{9-10}$$

Solution function

$$ff(L_o,H_o,L_S,H_S,x_B,\rho,t_C,\varepsilon_P,\varepsilon_S,\varepsilon_D,D_{Di},F_K,F_{D3},F_{D6},F_{D9},\Delta Z_D,L_P,H,Z,L_c,W_c,\varepsilon_c,H_P,p,V):=\mathrm{Find}(H_P,p,V)$$

$$\begin{array}{ccccccc}(p_2 & p_3 & p_5 & p_6 & p_8 & p_9 & p_c)^T \\ 0 & 1 & 2 & 3 & 4 & 5 & 6\end{array} \qquad \begin{array}{ccccccc}(V_1 & V_3 & V_5 & V_6 & V_8 & V_9 & V_c)^T \\ 0 & 1 & 2 & 3 & 4 & 5 & 6\end{array}$$

**CH2MHILL Hanford Group, Inc.**

**EVALUATION ANALYSIS**

Calc. No. RPP-LJJ-005
Revision: 0
Page No. 7 of 22

Client: CH2M Hill Hanford Group, Inc.
Subject: Secondary Encasement Pipe Pressure Due to Primary Pipe Break in Waste Tank Cross-Site Transfer Piping System
Location: 200 Area - Hanford Site, Richland, Washington

WO/Job No. _____
Date: 9/12/2001 By: L. J. Julyk
Checked: 9/25/01 By: [illegible]
Revised: _____ By: _____

For plotting, following function returns nth solution variable at points defined in vector $x_B$ n = result variable selected

$$PP(L_o, H_o, L_S, H_S, x_B, \rho, t_C, \varepsilon_P, \varepsilon_S, \varepsilon_D, D_{Di}, F_K, F_{D3}, F_{D6}, F_{D9}, \Delta Z_D, L_P, H, Z, n, L_c, W_c, \varepsilon_c, H_P, p, V) :=$$

```
vp ← 0
H'P ← HP
p' ← p
V' ← V
for i ∈ 0..length(xB) − 1
    xBB ← xBi
    X ← ff(Lo, Ho, LS, HS, xI
    H'P ← X0
    p' ← X1
    V' ← X2
    V' ← V' + ΔV/4
    Y ← XI
    vpi ← Yn
vp
```

**CH2MHILL Hanford Group, Inc.**

**EVALUATION ANALYSIS**

Calc. No. RPP-LJJ-005
Revision: 0
Page No. 8 of 22

Client: CH2M Hill Hanford Group, Inc.
Subject: Secondary Encasement Pipe Pressure Due to Primary Pipe Break in Waste Tank Cross-Site Transfer Piping System
Location: 200 Area - Hanford Site, Richland, Washington

WO/Job No. _____
Date: 9/12/2001 By: L. J. Julyk
Checked: 9/25/01 By: [signature]
Revised: _____ By: _____

**AW105-WTP Supernate Transfer**

**Case 0 break between AW105 05A and AWA**

$L_o := 0 \cdot ft$ $\quad L_o = 0\,ft$ start distance from pump of secondary encasement section under consideration

$H_o := 0 \cdot ft$ $\quad H_o = 0\,ft$ change in elevation of primary pipe from pump to point $L_o$

$L_S := L_{AW105.05A_AWA}$ $\quad L_S = 348\,ft$ length of secondary encasement section under consideration between drains

$H_S := Z_{AWA} - Z_{AW105.05A}$ $\quad H_S = 0.85\,ft$ change in elevation of primary pipe from pump to point $L_o + L_S$

Subcase X11 (low and high point drain, $F_{D6} = 1$ and $F_{D9} = 1$)*,
X10 (low point drain, FD6 = 1 and FD9 = 0),
X01 (high point drain, FD6 = 0 and FD9 = 1)*

$D_{Di} := D_{D1.5}$ $\quad \rho := 1.3 \cdot \frac{kg}{liter}$ $\quad t_C := 60\ °C$

**Initial guesses (X10)** $Q := 326 \cdot gpm$ $\quad V_1 := \frac{Q}{A_P}$ $\quad V_1 = 14.148\,\frac{ft}{sec}$ flow velocities

Low point drain open

$F_K := 0$ $\quad F_{D3} := 1$ $\quad F_{D6} := 1$ $\quad F_{D9} := 0$

$H_{P10} := H'_p(Q)$ pump head $\quad H_{P10} = 239\,ft$

$p_2 := 148 \cdot psi$ primary pipe pressure just up stream of break

$p_3 := 149 \cdot psi$ primary pipe pressure just down stream of break

$p_5 := 20 \cdot psi$ secondary pipe pressure just up stream of break

$p_6 := 12 \cdot psi$ secondary pipe pressure at drain up stream of break

$p_8 := 20 \cdot psi$ secondary pipe pressure just down stream of break

$p_9 := 8 \cdot psi$ secondary pipe pressure at drain down stream of break

$V_5 := \frac{V_1 \cdot F_{D6} + \Delta V}{3.1}$

$V_6 := V_5 \cdot \frac{A_{S6}(F_K)}{A_f(D_{Di})}$ $\quad \frac{A_{S6}(F_K)}{A_P} = 2.607$

$V_8 := \frac{V_1 \cdot F_{D9} + \Delta V}{50}$ $\quad \frac{A_{S6}(F_K)}{A_f(D_{Di})} = 9.46$

$V_9 := V_8 \cdot \frac{A_{S6}(F_K)}{A_f(D_{Di})}$

$p_c := 1 \cdot psi$ apply conservation of mass (continuity) at break

$V_3 := V_1 - \frac{A_{S6}(F_K)}{A_P} \cdot (V_5 + V_8)$ $\quad V_3 = 2.16\,\frac{ft}{sec}$

$V_c := \frac{A_{S6}(F_K)}{A_{crack}(L_c, W_c)} \cdot (V_5 + V_8)$ $\quad V_c = 88.6\,\frac{ft}{sec}$

$p_{10} := (p_2\ p_3\ p_5\ p_6\ p_8\ p_9\ p_c)^T$ $\quad V_{10} := (V_1\ V_3\ V_5\ V_6\ V_8\ V_9\ V_c)^T$

**use Existing Piping Guide/Anchor** $\quad F_K = 0$

**CH2MHILL Hanford Group, Inc.**

**EVALUATION ANALYSIS**

Calc. No. RPP-LJJ-005
Revision: 0
Page No. 9 of 22

Client: CH2M Hill Hanford Group, Inc.
Subject: Secondary Encasement Pipe Pressure Due to Primary Pipe Break in Waste Tank Cross-Site Transfer Piping System
Location: 200 Area - Hanford Site, Richland, Washington

WO/Job No. _____
Date: 9/12/2001 By: L. J. Julyk
Checked: 9/25/01 By: R. F. Schlosser
Revised: _____ By: _____

**Case 0 (X10)**

**SY-101 New Transfer Pump** (RPP-5667 Rev. 0B)
(Canned Motor Westinghouse Pump Model 2A-513-A1)

Input==========

$L_o = 0\,ft$ $\quad H = -22\,ft$ $\quad \varepsilon_P = 2\,mil$

$\boxed{L_S = 348\,ft}$ $\quad \rho = 1.3\,\frac{kg}{liter}$ $\quad Z = 22.9\,ft$ $\quad \varepsilon_S = 5\,mil$ $\quad D_{LDo_{F_K}} = 0\,in$ $\quad F_K = 0$

$L_P = 5905\,ft$ $\quad F_{D3} = 1$ $\quad \varepsilon_D = 5\,mil$

$\boxed{x_B := 347 \cdot ft + L_o}$ $\quad t_C = 60\ ^{\circ}C$ $\quad D_{Di} = 1.61\,in$ $\quad \Delta Z_D = -1\,ft$ $\quad L_D(D_{Di}, F_K) = 7.025\,ft$ $\quad L_c = 10\,in$

$W_c = 0.1\,in$

$F_{D6} := 1$ $\quad F_{D9} := 0$ $\quad J(F_K, L_o, x_B) = 0$ $\quad N(F_K, L_o, L_S, x_B) = 0$ $\quad \varepsilon_c = 1\,mil$

$I(F_K, L_o, x_B) = 39$ $\quad M(F_K, L_o, L_S, x_B) = 0$

$$\begin{pmatrix} h_{P10} \\ P_{10} \\ v_{10} \end{pmatrix} := ff(L_o, H_o, L_S, H_S, x_B, \rho, t_C, \varepsilon_P, \varepsilon_S, \varepsilon_D, D_{Di}, F_K, F_{D3}, F_{D6}, F_{D9}, \Delta Z_D, L_P, H, Z, L_c, W_c, \varepsilon_c, H_{P10}, p_{10}, V_{10})$$

$$\begin{pmatrix} P_2 \\ P_3 \\ P_5 \\ P_6 \\ P_8 \\ P_9 \\ P_{crack} \end{pmatrix} := P_{10} \quad \begin{pmatrix} v_1 \\ v_3 \\ v_5 \\ v_6 \\ v_8 \\ v_9 \\ v_{crack} \end{pmatrix} := v_{10}$$

Results----------

$h_{P10} = 254\,ft$ $\quad \mu(\rho, t_C) = 1.197\,cP$ $\quad L_{i_{F_K}} = 9\,ft$ $\quad L_{j_{F_K}} = 9 \times 10^4\,ft$

$P_2 = 100.1\,psi$ $\quad v_1 = 13.8\,ft\,sec^{-1}$ $\quad A_P \cdot v_1 = 317.5\,gpm$ $\quad D_{Di} = 1.61\,in$

$P_3 = 101.6\,psi$ $\quad F_{D3} \cdot v_3 = 5.1\,ft\,sec^{-1}$ $\quad F_{D3} \cdot A_P \cdot v_3 = 117.6\,gpm$

$P_5 = 36.7\,psi$ $\quad v_5 = 3.3\,ft\,sec^{-1}$ $\quad A_{S6}(F_K) \cdot v_5 = 199.9\,gpm$

$P_6 = 20.3\,psi$ $\quad F_{D6} \cdot v_6 = 31.5\,ft\,sec^{-1}$ $\quad F_{D6} \cdot A_f(D_{Di}) \cdot v_6 = 199.9\,gpm$

$P_8 = 36.8\,psi$ $\quad v_8 = 0\,ft\,sec^{-1}$ $\quad A_{S6}(F_K) \cdot v_8 = 0\,gpm$

$P_9 = 25.9\,psi$ $\quad F_{D9} \cdot v_9 = 0\,ft\,sec^{-1}$ $\quad F_{D9} \cdot A_f(D_{Di}) \cdot v_9 = 0\,gpm$

$P_{crack} = 0.8\,psi$ $\quad v_1 \cdot A_P = F_{D3} \cdot A_P \cdot v_3 + A_{S6}(F_K) \cdot v_5 + A_{S6}(F_K) \cdot v_8 = 317.5\,gpm$

(continuity check at break, OK)

$v_{crack} = 64.1\,ft\,sec^{-1}$

$R_e(D_{H_crack}(L_c, W_c), v_{crack}, \rho, \mu(\rho, t_C)) = 1 \times 10^5$

$P_2 - P_5 = 63.387\,psi$

**CH2MHILL Hanford Group, Inc.**

**EVALUATION ANALYSIS**

Calc. No. RPP-LJJ-005
Revision: 0
Page No. 10 of 22

Client: CH2M Hill Hanford Group, Inc.
Subject: Secondary Encasement Pipe Pressure Due to Primary Pipe Break in Waste Tank Cross-Site Transfer Piping System
Location: 200 Area - Hanford Site, Richland, Washington

WO/Job No. _____
Date: 9/12/2001 By: L. J. Julyk
Checked: 9/25/01 By: [signature]
Revised: _____ By: _____

**Figure 1a. Case 0: Maximum Pressure in AW105-WTP Encasement Pipe Due to Primary Pipe Break (Between AW105 05A and AWA) within Encasement Section of Length $L_s$ Starting at $L_o$ Relative to Transfer Pump for Supernate Waste Transfer at Temperature of 60 °C.**

$F_K = 0$ Low point drain $L_c = 10\,in$

$Z = 22.9\,ft$ $t_C = 60\,°C$ $\rho = 1.3\,\frac{kg}{liter}$ $\mu(\rho, t_C) = 1.197\,cP$ $D_{LDo_{F_K}} = 0\,in$ $D_{Di} = 1.61\,in$ $W_c = 0.1\,in$

$H = -22.1\,ft$ $L_o = 0\,ft$ $L_S = 348\,ft$ $L_P = 5905\,ft$ $L_{i_{F_K}} = 9\,ft$ $\varepsilon_P = 2\,mil$ $L_D(D_{Di}, F_K) = 7\,ft$ $\varepsilon_c = 1\,mil$

$\Delta Z_D = -1\,ft$ $H_o = 0\,ft$ $H_S = 0.85\,ft$ $F_{D3} = 1$ $L_{j_{F_K}} = 9 \times 10^4\,ft$ $\varepsilon_S = 5\,mil$ $\varepsilon_D = 5\,mil$

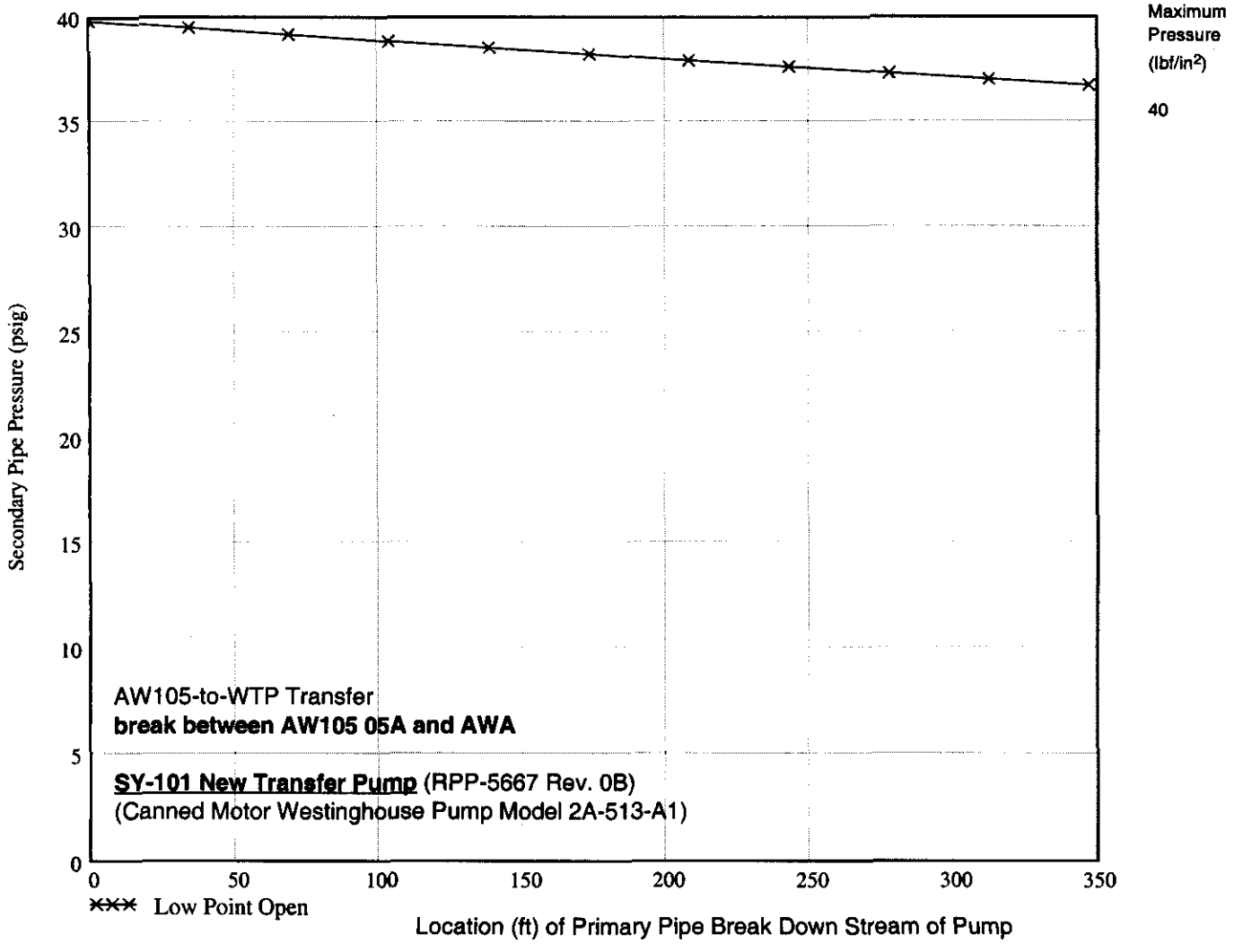

**CH2MHILL Hanford Group, Inc.**

**EVALUATION ANALYSIS**

Calc. No. RPP-LJJ-005
Revision: 0
Page No. 11 of 22

Client: CH2M Hill Hanford Group, Inc.
Subject: Secondary Encasement Pipe Pressure Due to Primary Pipe Break in Waste Tank Cross-Site Transfer Piping System
Location: 200 Area - Hanford Site, Richland, Washington

WO/Job No. _____
Date: 9/12/2001 By: L. J. Julyk
Checked: 9/25/01 By: [signature]
Revised: _____ By: _____

**Supernate Transfer**
**Case 1 break between AWA and AW102 02A**

$L_o := L_{AW105.05A_AWA}$ $L_o = 348\,ft$ start distance from pump of secondary encasement section under consideration

$H_o := Z_{AWA} - Z_{AW105.05A}$ $H_o = 0.85\,ft$ change in elevation of primary pipe from pump to point $L_o$

$L_S := L_{AWA_AW102.02A}$ $L_S = 329\,ft$ length of secondary encasement section under consideration between drains

$H_S := Z_{AW102.02A} - Z_{AW105.05A}$ $H_S = 0\,ft$ change in elevation of primary pipe from pump to point $L_o + L_S$

Subcase X11 (low and high point drain, $F_{D6} = 1$ and $F_{D9} = 1$)*,
X10 (high point drain, FD6 = 1 and FD9 = 0)*,
X01 (low point drain, FD6 = 0 and FD9 = 1)

**use Existing guide/anchor**

$D_{Di} = 1.61\,in$

**Initial guesses (X01)** $Q := 270 \cdot gpm$ $V_1 := \frac{Q}{A_P}$ $V_1 = 11.718\,\frac{ft}{sec}$ low velocities

$F_K = 0$ $F_{D3} = 1$ $F_{D6} := 0$ $F_{D9} := 1$

Low point drain open

$H_{P01} := H'_p(Q)$ pump head $H_{P01} = 334\,ft$

$p_2 := 185 \cdot psi$ primary pipe pressure just up stream of break

$p_3 := 185 \cdot psi$ primary pipe pressure just down stream of break

$p_5 := 67 \cdot psi$ secondary pipe pressure just up stream of break

$p_6 := 47 \cdot psi$ secondary pipe pressure at drain up stream of break

$p_8 := 67 \cdot psi$ secondary pipe pressure just down stream of break

$p_9 := 37 \cdot psi$ secondary pipe pressure at drain down stream of break

$V_5 := \frac{V_1 \cdot F_{D6} + \Delta V}{50}$

$V_6 := V_5 \cdot \frac{A_{S6}(F_K)}{A_f(D_{Di})}$ $\frac{A_{S6}(F_K)}{A_P} = 2.607$

$V_8 := \frac{V_1 \cdot F_{D9} + \Delta V}{2.7}$ $\frac{A_{S6}(F_K)}{A_f(D_{Di})} = 9.46$

$V_9 := V_8 \cdot \frac{A_{S6}(F_K)}{A_f(D_{Di})}$

$p_c := 1.7 \cdot psi$

apply conservation of mass (continuity) at break

$V_3 := V_1 - \frac{A_{S6}(F_K)}{A_P} \cdot (V_5 + V_8)$ $V_3 = 0.3\,\frac{ft}{sec}$

$V_c := \frac{A_{S6}(F_K)}{A_{crack}(L_c, W_c)} \cdot (V_5 + V_8)$ $V_c = 84.4\,\frac{ft}{sec}$

$p_{01} := (p_2\ p_3\ p_5\ p_6\ p_8\ p_9\ p_c)^T$
0 1 2 3 4 5 6

$V_{01} := (V_1\ V_3\ V_5\ V_6\ V_8\ V_9\ V_c)^T$
0 1 2 3 4 5 6

**CH2MHILL Hanford Group, Inc.**

**EVALUATION ANALYSIS**

Calc. No. RPP-LJJ-005
Revision: 0
Page No. 12 of 22

Client: CH2M Hill Hanford Group, Inc.
Subject: Secondary Encasement Pipe Pressure Due to Primary Pipe Break in Waste Tank Cross-Site Transfer Piping System
Location: 200 Area - Hanford Site, Richland, Washington

WO/Job No. _____
Date: 9/12/2001 By: L. J. Julyk
Checked: 9/25/01 By: R. McClone
Revised: _____ By: _____

**Case 1 (X01)**

Input==========

**SY-101 New Transfer Pump** (RPP-5667 Rev. 0B)
(Canned Motor Westinghouse Pump Model 2A-513-A1)

$L_o = 348\,ft$ $\quad H = -22\,ft$ $\quad \varepsilon_P = 2\,mil$

$L_S = 329\,ft$ $\quad \rho = 1.3\,\frac{kg}{liter}$ $\quad Z = 22.9\,ft$ $\quad \varepsilon_S = 5\,mil$ $\quad D_{LDo_{F_K}} = 0\,in$ $\quad F_K = 0$

$L_P = 5905\,ft$ $\quad F_{D3} = 1$ $\quad \varepsilon_D = 5\,mil$

$x_B := 0 \cdot ft + L_o$ $\quad t_C = 60\,°C$ $\quad D_{Di} = 1.61\,in$ $\quad \Delta Z_D = -1\,ft$ $\quad L_D(D_{Di}, F_K) = 7.025\,ft$ $\quad L_c = 10\,in$ $\quad W_c = 0.1\,in$ $\quad \varepsilon_c = 1\,mil$

$F_{D6} := 0$ $\quad F_{D9} := 1$ $\quad J(F_K, L_o, x_B) = 0$ $\quad N(F_K, L_o, L_S, x_B) = 0$

$I(F_K, L_o, x_B) = 0$ $\quad M(F_K, L_o, L_S, x_B) = 37$

$$\begin{pmatrix} h_{P01} \\ P_{01} \\ v_{01} \end{pmatrix} := ff(L_o, H_o, L_S, H_S, x_B, \rho, t_C, \varepsilon_P, \varepsilon_S, \varepsilon_D, D_{Di}, F_K, F_{D3}, F_{D6}, F_{D9}, \Delta Z_D, L_P, H, Z, L_c, W_c, \varepsilon_c, H_{P01}, p_{01}, V_{01})$$

$$\begin{pmatrix} P_2 \\ P_3 \\ P_5 \\ P_6 \\ P_8 \\ P_9 \\ P_{crack} \end{pmatrix} := P_{01} \qquad \begin{pmatrix} v_1 \\ v_3 \\ v_5 \\ v_6 \\ v_8 \\ v_9 \\ v_{crack} \end{pmatrix} := v_{01}$$

Results----------

$h_{P01} = 254\,ft$ $\quad \mu(\rho, t_C) = 1.197\,cP$ $\quad L_{i_{F_K}} = 9\,ft$ $\quad L_{j_{F_K}} = 9 \times 10^4\,ft$

$P_2 = 100\,psi$ $\quad v_1 = 13.8\,ft\,sec^{-1}$ $\quad A_P \cdot v_1 = 317.5\,gpm$ $\quad D_{Di} = 1.61\,in$

$P_3 = 101.4\,psi$ $\quad F_{D3} \cdot v_3 = 5.1\,ft\,sec^{-1}$ $\quad F_{D3} \cdot A_P \cdot v_3 = 117.5\,gpm$

$P_5 = 36.6\,psi$ $\quad v_5 = 0\,ft\,sec^{-1}$ $\quad A_{S6}(F_K) \cdot v_5 = 0\,gpm$

$P_6 = 25.7\,psi$ $\quad F_{D6} \cdot v_6 = 0\,ft\,sec^{-1}$ $\quad F_{D6} \cdot A_f(D_{Di}) \cdot v_6 = 0\,gpm$

$P_8 = 36.6\,psi$ $\quad v_8 = 3.3\,ft\,sec^{-1}$ $\quad A_{S6}(F_K) \cdot v_8 = 200\,gpm$

$P_9 = 20.4\,psi$ $\quad F_{D9} \cdot v_9 = 31.5\,ft\,sec^{-1}$ $\quad F_{D9} \cdot A_f(D_{Di}) \cdot v_9 = 200\,gpm$

$P_{crack} = 0.6\,psi$ $\quad v_1 \cdot A_P = F_{D3} \cdot A_P \cdot v_3 + A_{S6}(F_K) \cdot v_5 + A_{S6}(F_K) \cdot v_8 = 317.5\,gpm$

(continuity check at break, OK)

$v_{crack} = 64.2\,ft\,sec^{-1}$

$R_e(D_{H_crack}(L_c, W_c), v_{crack}, \rho, \mu(\rho, t_C)) = 1 \times 10^5$

$P_2 - P_5 = 63.347\,psi$

**CH2MHILL Hanford Group, Inc.**

**EVALUATION ANALYSIS**

Calc. No. RPP-LJJ-005
Revision: 0
Page No. 13 of 22

Client: CH2M Hill Hanford Group, Inc.
Subject: Secondary Encasement Pipe Pressure Due to Primary Pipe Break in Waste Tank Cross-Site Transfer Piping System
Location: 200 Area - Hanford Site, Richland, Washington

WO/Job No. _____
Date: 9/12/2001 By: L. J. Julyk
Checked: 9/25/01 By: [signature]
Revised: _____ By: _____

**Figure 1b. Case 1: Maximum Pressure in AW105-WTP Encasement Pipe Due to Primary Pipe Break (Between AWA and AW102 02A) within Encasement Section of Length $L_s$ Starting at $L_o$ Relative to Transfer Pump for Supernate Waste Transfer at Temperature of 60 °C.**

$F_K = 0$ $L_c = 10\,in$

Low point drain

$Z = 22.9\,ft$ $t_C = 60\ ^oC$ $\rho = 1.3\,\frac{kg}{liter}$ $\mu(\rho, t_C) = 1.197\,cP$ $D_{LDo_{F_K}} = 0\,in$ $D_{Di} = 1.61\,in$ $W_c = 0.1\,in$

$H = -22.1\,ft$ $L_o = 348\,ft$ $L_S = 329\,ft$ $L_P = 5905\,ft$ $L_{i_{F_K}} = 9\,ft$ $\varepsilon_P = 2\,mil$ $L_D(D_{Di}, F_K) = 7\,ft$ $\varepsilon_c = 1\,mil$

$\Delta Z_D = -1\,ft$ $H_o = 0.85\,ft$ $H_S = 0\,ft$ $F_{D3} = 1$ $L_{j_{F_K}} = 9 \times 10^4\,ft$ $\varepsilon_S = 5\,mil$ $\varepsilon_D = 5\,mil$

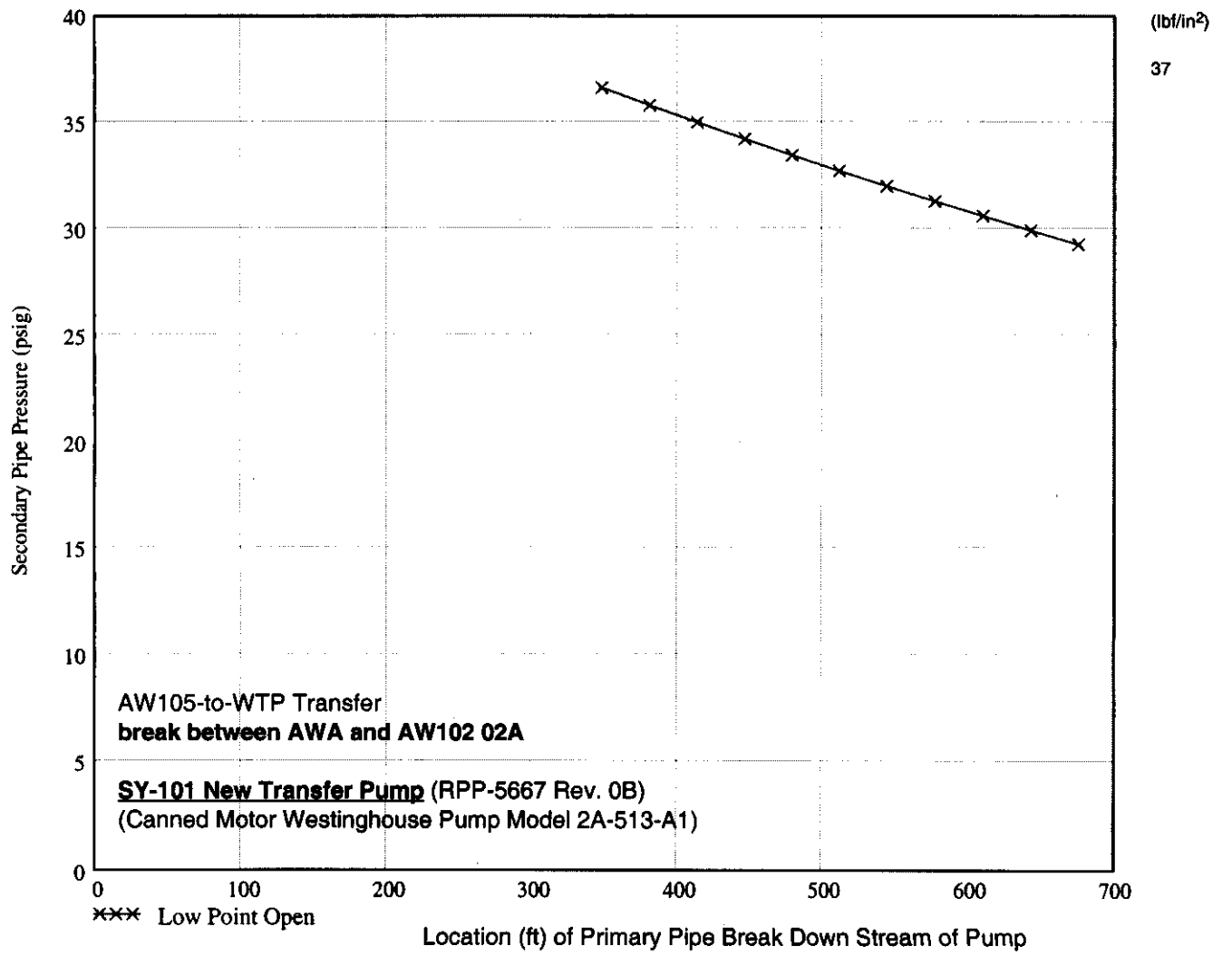

**CH2MHILL Hanford Group, Inc.**

**EVALUATION ANALYSIS**

Calc. No. RPP-LJJ-005
Revision: 0
Page No. 14 of 22

Client: CH2M Hill Hanford Group, Inc.
Subject: Secondary Encasement Pipe Pressure Due to Primary Pipe Break in Waste Tank Cross-Site Transfer Piping System
Location: 200 Area - Hanford Site, Richland, Washington

WO/Job No. _____
Date: 9/12/2001 By: L. J. Julyk
Checked: 9/25/01 By: [illegible]
Revised: _____ By: _____

**Supernate Transfer**

**Case 2 break between AW102 02A and AP pit**

$L_o := L_{W105.05A_AW102.02A}$ $L_o = 677\,ft$ start distance from pump of secondary encasement section under consideration

$H_o := Z_{AW102.02A} - Z_{AW105.05A}$ $H_o = 0\,ft$ change in elevation of primary pipe from pump to point $L_o$

$L_S := L_{AW102.02A_APpit}$ $L_S = 966\,ft$ length of secondary encasement section under consideration between drains

$H_S := Z_{APpit} - Z_{AW105.05A}$ $H_S = -7.89\,ft$ hange in elevation of primary pipe from pump to point $L_o + L_S$

**use Existing guide/anchor**

Subcase X11 (low and high point drain, $F_{D6} = 1$ and $F_{D9} = 1$)*,
X10 (high point drain, FD6 = 1 and FD9 = 0)*,
X01 (low point drain, FD6 = 0 and FD9 = 1)

$D_{Di} = 1.61\,in$

**Initial guesses (X01)** $Q := 307 \cdot gpm$ $V_1 := \frac{Q}{A_P}$ $V_1 = 13.323\,\frac{ft}{sec}$ low velocities

$F_K = 0$ $F_{D3} = 1$ $F_{D6} := 0$ $F_{D9} := 1$

Low point drain open

$H_{P01} := H'_p(Q)$ pump head $H_{P01} = 273\,ft$

$p_2 := 94 \cdot psi$ primary pipe pressure just up stream of break

$p_3 := 94 \cdot psi$ primary pipe pressure just down stream of break

$p_5 := 36 \cdot psi$ secondary pipe pressure just up stream of break

$p_6 := 25 \cdot psi$ secondary pipe pressure at drain up stream of break

$p_8 := 36 \cdot psi$ secondary pipe pressure just down stream of break

$p_9 := 18 \cdot psi$ secondary pipe pressure at drain down stream of break

$V_5 := \frac{V_1 \cdot F_{D6} + \Delta V}{3}$

$V_6 := V_5 \cdot \frac{A_{S6}(F_K)}{A_f(D_{Di})}$ $\frac{A_{S6}(F_K)}{A_P} = 2.607$

$V_8 := \frac{V_1 \cdot F_{D9} + \Delta V}{4.2}$ $\frac{A_{S6}(F_K)}{A_f(D_{Di})} = 9.46$

$V_9 := V_8 \cdot \frac{A_{S6}(F_K)}{A_f(D_{Di})}$

$p_c := 3.8 \cdot psi$

apply conservation of mass (continuity) at break

$V_3 := V_1 - \frac{A_{S6}(F_K)}{A_P} \cdot (V_5 + V_8)$ $V_3 = 4.91\,\frac{ft}{sec}$

$V_c := \frac{A_{S6}(F_K)}{A_{crack}(L_c, W_c)} \cdot (V_5 + V_8)$ $V_c = 62.2\,\frac{ft}{sec}$

$p_{01} := (p_2\ p_3\ p_5\ p_6\ p_8\ p_9\ p_c)^T$
0 1 2 3 4 5 6

$V_{01} := (V_1\ V_3\ V_5\ V_6\ V_8\ V_9\ V_c)^T$
0 1 2 3 4 5 6

**CH2MHILL Hanford Group, Inc.**

**EVALUATION ANALYSIS**

Calc. No. RPP-LJJ-005
Revision: 0
Page No. 15 of 22

Client: CH2M Hill Hanford Group, Inc.
Subject: Secondary Encasement Pipe Pressure Due to Primary Pipe Break in Waste Tank Cross-Site Transfer Piping System
Location: 200 Area - Hanford Site, Richland, Washington

WO/Job No. _____
Date: 9/12/2001 By: L. J. Julyk
Checked: 9/25/01 By: R. H. Clark
Revised: _____ By: _____

**Case 2 (X01)**

Input==========

**SY-101 New Transfer Pump** (RPP-5667 Rev. 0B)
(Canned Motor Westinghouse Pump Model 2A-513-A1)

$L_o = 677\,ft$ $\quad H = -22\,ft$ $\quad \varepsilon_P = 2\,mil$

$\boxed{L_S = 966\,ft}$ $\quad \rho = 1.3\,\frac{kg}{liter}$ $\quad Z = 22.9\,ft$ $\quad \varepsilon_S = 5\,mil$ $\quad D_{LDo_{F_K}} = 0\,in$ $\quad F_K = 0$

$L_P = 5905\,ft$ $\quad F_{D3} = 1$ $\quad \varepsilon_D = 5\,mil$ $\quad L_c = 10\,in$

$\boxed{x_B := 965 \cdot ft + L_o}$ $\quad t_C = 60\ ^\circ C$ $\quad D_{Di} = 1.61\,in$ $\quad \Delta Z_D = -1\,ft$ $\quad L_D(D_{Di}, F_K) = 7.025\,ft$ $\quad W_c = 0.1\,in$

$F_{D6} := 0$ $\quad F_{D9} := 1$ $\quad J(F_K, L_o, x_B) = 0$ $\quad N(F_K, L_o, L_S, x_B) = 0$ $\quad \varepsilon_c = 1\,mil$

$I(F_K, L_o, x_B) = 107$ $\quad M(F_K, L_o, L_S, x_B) = 0$

$$\begin{pmatrix} h_{P01} \\ P_{01} \\ v_{01} \end{pmatrix} := ff(L_o, H_o, L_S, H_S, x_B, \rho, t_C, \varepsilon_P, \varepsilon_S, \varepsilon_D, D_{Di}, F_K, F_{D3}, F_{D6}, F_{D9}, \Delta Z_D, L_P, H, Z, L_c, W_c, \varepsilon_c, H_{P01}, p_{01}, V_{01})$$

$$\begin{pmatrix} P_2 \\ P_3 \\ P_5 \\ P_6 \\ P_8 \\ P_9 \\ P_{crack} \end{pmatrix} := P_{01} \qquad \begin{pmatrix} v_1 \\ v_3 \\ v_5 \\ v_6 \\ v_8 \\ v_9 \\ v_{crack} \end{pmatrix} := v_{01}$$

Results----------

$h_{P01} = 347\,ft$ $\quad \mu(\rho, t_C) = 1.197\,cP$ $\quad L_{i_{F_K}} = 9\,ft$ $\quad L_{j_{F_K}} = 9 \times 10^4\,ft$

$P_2 = 61.8\,psi$ $\quad v_1 = 11.3\,ft\,sec^{-1}$ $\quad A_P \cdot v_1 = 261\,gpm$ $\quad D_{Di} = 1.61\,in$

$P_3 = 62.7\,psi$ $\quad F_{D3} \cdot v_3 = 4.4\,ft\,sec^{-1}$ $\quad F_{D3} \cdot A_P \cdot v_3 = 100.5\,gpm$

$P_5 = 21.1\,psi$ $\quad v_5 = 0\,ft\,sec^{-1}$ $\quad A_{S6}(F_K) \cdot v_5 = 0\,gpm$

$P_6 = 11.6\,psi$ $\quad F_{D6} \cdot v_6 = 0\,ft\,sec^{-1}$ $\quad F_{D6} \cdot A_f(D_{Di}) \cdot v_6 = 0\,gpm$

$P_8 = 21\,psi$ $\quad v_8 = 2.7\,ft\,sec^{-1}$ $\quad A_{S6}(F_K) \cdot v_8 = 160.5\,gpm$

$P_9 = 12.9\,psi$ $\quad F_{D9} \cdot v_9 = 25.3\,ft\,sec^{-1}$ $\quad F_{D9} \cdot A_f(D_{Di}) \cdot v_9 = 160.5\,gpm$

$P_{crack} = -2.2\,psi$ $\quad v_1 \cdot A_P = F_{D3} \cdot A_P \cdot v_3 + A_{S6}(F_K) \cdot v_5 + A_{S6}(F_K) \cdot v_8 = 261\,gpm$

(continuity check at break, OK)

$v_{crack} = 51.5\,ft\,sec^{-1}$

$R_e(D_{H_crack}(L_c, W_c), v_{crack}, \rho, \mu(\rho, t_C)) = 9 \times 10^4$

$P_2 - P_5 = 40.739\,psi$

**CH2MHILL Hanford Group, Inc.**

**EVALUATION ANALYSIS**

Calc. No. RPP-LJJ-005
Revision: 0
Page No. 16 of 22

Client: CH2M Hill Hanford Group, Inc.
Subject: Secondary Encasement Pipe Pressure Due to Primary Pipe Break in Waste Tank Cross-Site Transfer Piping System
Location: 200 Area - Hanford Site, Richland, Washington

WO/Job No. _____
Date: 9/12/2001 By: L. J. Julyk
Checked: 9/25/01 By: R. J. Schlosser
Revised: _____ By: _____

**Figure 1c. Case 2: Maximum Pressure in AW105-WTP Encasement Pipe Due to Primary Pipe Break (Between AW102 02A and AP Pit) within Encasement Section of Length $L_s$ Starting at $L_o$ Relative to Transfer Pump for Supernate Waste Transfer at Temperature of 60 °C.**

$F_K = 0$ | Low point drain | $L_c = 10\,in$

$Z = 22.9\,ft$ | $t_C = 60\,°C$ | $\rho = 1.3\,\frac{kg}{liter}$ | $\mu(\rho, t_C) = 1.197\,cP$ | $D_{LDo_{F_K}} = 0\,in$ | $D_{Di} = 1.61\,in$ | $W_c = 0.1\,in$

$H = -22.1\,ft$ | $L_o = 677\,ft$ | $L_S = 966\,ft$ | $L_P = 5905\,ft$ | $L_{i_{F_K}} = 9\,ft$ | $\varepsilon_P = 2\,mil$ | $L_D(D_{Di}, F_K) = 7\,ft$ | $\varepsilon_c = 1\,mil$

$\Delta Z_D = -1\,ft$ | $H_o = 0\,ft$ | $H_S = -7.89\,ft$ | $F_{D3} = 1$ | $L_{j_{F_K}} = 9 \times 10^4\,ft$ | $\varepsilon_S = 5\,mil$ | $\varepsilon_D = 5\,mil$

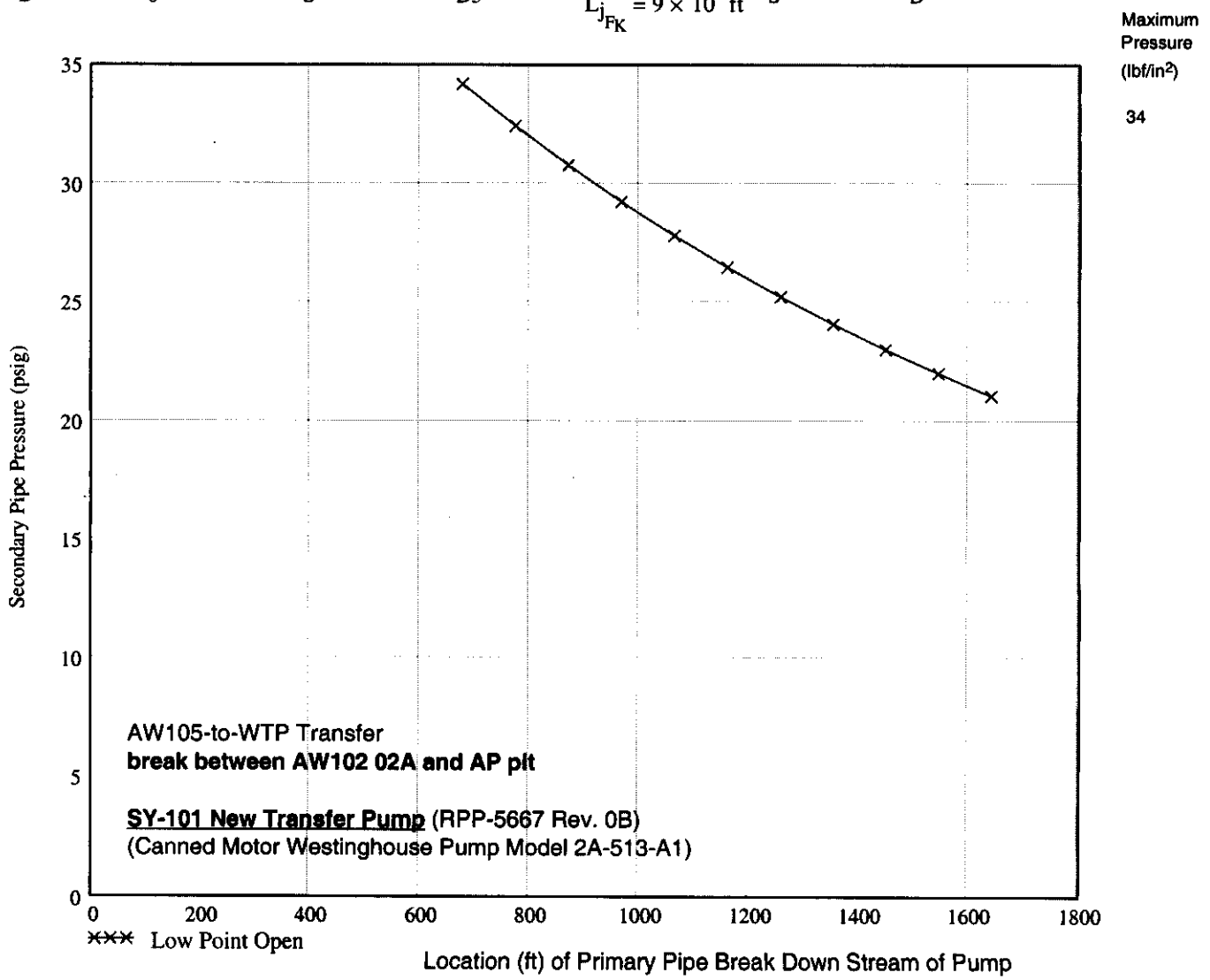

**CH2MHILL Hanford Group, Inc.**

**EVALUATION ANALYSIS**



Client: CH2M Hill Hanford Group, Inc.
Subject: Secondary Encasement Pipe Pressure Due to Primary Pipe Break in Waste Tank Cross-Site Transfer Piping System
Location: 200 Area - Hanford Site, Richland, Washington

WO/Job No. _____
Date: 9/12/2001 By: L. J. Julyk
Checked: 9/25/01 By: RJS Clouse
Revised: _____ By: _____

**Supernate Transfer**

**Case 3 break between AP pit and AP A pit**

$L_o := L_{W105.05A_APpit}$ $L_o = 1643\,ft$ start distance from pump of secondary encasement section under consideration

$H_o := Z_{APpit} - Z_{AW105.05A}$ $H_o = -7.89\,ft$ change in elevation of primary pipe from pump to point $L_o$

$L_S := L_{APpit_APApit}$ $L_S = 655\,ft$ length of secondary encasement section under consideration between drains

$H_S := Z_{APApit} - Z_{AW105.05A}$ $H_S = -10.5\,ft$ change in elevation of primary pipe from pump to point $L_o + L_S$

**use W314 guide/anchor**

Subcase X11 (low and high point drain, $F_{D6} = 1$ and $F_{D9} = 1$)*,
X10 (high point drain, FD6 = 1 and FD9 = 0)*,
X01 (low point drain, FD6 = 0 and FD9 = 1)

$D_{Di} = 1.61\,in$

**Initial guesses (X01)** $Q := 271 \cdot gpm$ $V_1 := \frac{Q}{A_P}$ $V_1 = 11.761\,\frac{ft}{sec}$ low velocities

High point drain open

$\boxed{F_K := 3}$ $F_{D3} = 1$ $F_{D6} := 0$ $F_{D9} := 1$

$H_{P01} := H'_p(Q)$ pump head $H_{P01} = 332\,ft$

$p_2 := 71 \cdot psi$ primary pipe pressure just up stream of break

$p_3 := 72 \cdot psi$ primary pipe pressure just down stream of break

$p_5 := 30 \cdot psi$ secondary pipe pressure just up stream of break

$p_6 := 21 \cdot psi$ secondary pipe pressure at drain up stream of break

$p_8 := 30 \cdot psi$ secondary pipe pressure just down stream of break

$p_9 := 13 \cdot psi$ secondary pipe pressure at drain down stream of break

$V_5 := \frac{V_1 \cdot F_{D6} + \Delta V}{3.7}$

$V_6 := V_5 \cdot \frac{A_{S6}(F_K)}{A_f(D_{Di})}$ $\frac{A_{S6}(F_K)}{A_P} = 2.607$

$V_8 := \frac{V_1 \cdot F_{D9} + \Delta V}{4.4}$ $\frac{A_{S6}(F_K)}{A_f(D_{Di})} = 9.46$

$V_9 := V_8 \cdot \frac{A_{S6}(F_K)}{A_f(D_{Di})}$

$p_c := 6 \cdot psi$ apply conservation of mass (continuity) at break

$V_3 := V_1 - \frac{A_{S6}(F_K)}{A_P} \cdot (V_5 + V_8)$ $V_3 = 4.66\,\frac{ft}{sec}$

$V_c := \frac{A_{S6}(F_K)}{A_{crack}(L_c, W_c)} \cdot (V_5 + V_8)$ $V_c = 52.5\,\frac{ft}{sec}$

$p_{01} := (p_2\ p_3\ p_5\ p_6\ p_8\ p_9\ p_c)^T$
0 1 2 3 4 5 6

$V_{01} := (V_1\ V_3\ V_5\ V_6\ V_8\ V_9\ V_c)^T$
0 1 2 3 4 5 6

**CH2MHILL Hanford Group, Inc.**

**EVALUATION ANALYSIS**

Calc. No. RPP-LJJ-005
Revision: 0
Page No. 18 of 22

Client: CH2M Hill Hanford Group, Inc.
Subject: Secondary Encasement Pipe Pressure Due to Primary Pipe Break in Waste Tank Cross-Site Transfer Piping System
Location: 200 Area - Hanford Site, Richland, Washington

WO/Job No. _____
Date: 9/12/2001 By: L. J. Julyk
Checked: 9/25/01 By: R. Hallowell
Revised: _____ By: _____

**Case 3 (X01)**

Input==========

**SY-101 New Transfer Pump** (RPP-5667 Rev. 0B)
(Canned Motor Westinghouse Pump Model 2A-513-A1)

$L_o = 1643\,ft$ $\quad H = -22\,ft$ $\quad \varepsilon_P = 2\,mil$

$\boxed{L_S = 655\,ft}$ $\quad \rho = 1.3\,\frac{kg}{liter}$ $\quad Z = 22.9\,ft$ $\quad \varepsilon_S = 5\,mil$ $\quad D_{LDo_{F_K}} = 0\,in$ $\quad F_K = 3$

$L_P = 5905\,ft$ $\quad F_{D3} = 1$ $\quad \varepsilon_D = 5\,mil$ $\quad L_c = 10\,in$

$\boxed{x_B := 0 \cdot ft + L_o}$ $\quad t_C = 60\ ^{\circ}C$ $\quad D_{Di} = 1.61\,in$ $\quad \Delta Z_D = -1\,ft$ $\quad L_D(D_{Di}, F_K) = 7.025\,ft$ $\quad W_c = 0.1\,in$

$F_{D6} := 0$ $\quad F_{D9} := 1$ $\quad J(F_K, L_o, x_B) = 0$ $\quad N(F_K, L_o, L_S, x_B) = 5$ $\quad \varepsilon_c = 1\,mil$

$I(F_K, L_o, x_B) = 0$ $\quad M(F_K, L_o, L_S, x_B) = 68$

$$\begin{pmatrix} h_{P01} \\ P_{01} \\ v_{01} \end{pmatrix} := ff(L_o, H_o, L_S, H_S, x_B, \rho, t_C, \varepsilon_P, \varepsilon_S, \varepsilon_D, D_{Di}, F_K, F_{D3}, F_{D6}, F_{D9}, \Delta Z_D, L_P, H, Z, L_c, W_c, \varepsilon_c, H_{P01}, p_{01}, V_{01})$$

$$\begin{pmatrix} P_2 \\ P_3 \\ P_5 \\ P_6 \\ P_8 \\ P_9 \\ P_{crack} \end{pmatrix} := P_{01} \quad \begin{pmatrix} v_1 \\ v_3 \\ v_5 \\ v_6 \\ v_8 \\ v_9 \\ v_{crack} \end{pmatrix} := v_{01} \qquad P_{01} = \begin{pmatrix} 64.987 \\ 65.919 \\ 26.619 \\ 18.639 \\ 26.56 \\ 12.173 \\ 4.723 \end{pmatrix} psi \quad v_{01} = \begin{pmatrix} 11.249 \\ 4.486 \\ 0 \\ 30.185 \\ 2.595 \\ 24.56 \\ 50 \end{pmatrix} ft\,sec^{-1}$$

Results----------

$h_{P01} = 350\,ft$ $\quad \mu(\rho, t_C) = 1.197\,cP$ $\quad L_{i_{F_K}} = 9\,ft$ $\quad L_{j_{F_K}} = 135\,ft$

$P_2 = 65\,psi$ $\quad v_1 = 11.2\,ft\,sec^{-1}$ $\quad A_P \cdot v_1 = 259.2\,gpm$ $\quad D_{Di} = 1.61\,in$

$P_3 = 65.9\,psi$ $\quad F_{D3} \cdot v_3 = 4.5\,ft\,sec^{-1}$ $\quad F_{D3} \cdot A_P \cdot v_3 = 103.4\,gpm$

$P_5 = 26.6\,psi$ $\quad v_5 = 0\,ft\,sec^{-1}$ $\quad A_{S6}(F_K) \cdot v_5 = 0\,gpm$

$P_6 = 18.6\,psi$ $\quad F_{D6} \cdot v_6 = 0\,ft\,sec^{-1}$ $\quad F_{D6} \cdot A_f(D_{Di}) \cdot v_6 = 0\,gpm$

$P_8 = 26.6\,psi$ $\quad v_8 = 2.6\,ft\,sec^{-1}$ $\quad A_{S6}(F_K) \cdot v_8 = 155.8\,gpm$

$P_9 = 12.2\,psi$ $\quad F_{D9} \cdot v_9 = 24.6\,ft\,sec^{-1}$ $\quad F_{D9} \cdot A_f(D_{Di}) \cdot v_9 = 155.8\,gpm$

$P_{crack} = 4.7\,psi$ $\quad v_1 \cdot A_P = F_{D3} \cdot A_P \cdot v_3 + A_{S6}(F_K) \cdot v_5 + A_{S6}(F_K) \cdot v_8 = 259.2\,gpm$

(continuity check at break, OK)

$v_{crack} = 50\,ft\,sec^{-1}$

$R_e(D_{H_crack}(L_c, W_c), v_{crack}, \rho, \mu(\rho, t_C)) = 8 \times 10^4$

$P_2 - P_5 = 38.367\,psi$

**CH2MHILL Hanford Group, Inc.**

**EVALUATION ANALYSIS**

Calc. No. RPP-LJJ-005
Revision: 0
Page No. 19 of 22

Client: CH2M Hill Hanford Group, Inc.
Subject: Secondary Encasement Pipe Pressure Due to Primary Pipe Break in Waste Tank Cross-Site Transfer Piping System
Location: 200 Area - Hanford Site, Richland, Washington

WO/Job No. _____
Date: 9/12/2001 By: L. J. Julyk
Checked: 9/25/01 By: R H Schlosser
Revised: _____ By: _____

**Figure 1d. Case 3: Maximum Pressure in AW105-WTP Encasement Pipe Due to Primary Pipe Break (Between AP pit and AP A Pit) within Encasement Section of Length $L_s$ Starting at $L_o$ Relative to Transfer Pump for Supernate Waste Transfer at Temperature of 60 °C.**

$F_K = 3$

$Z = 22.9\,ft$ $t_C = 60\ ^{o}C$ $\rho = 1.3\,\frac{kg}{liter}$ $\mu(\rho, t_C) = 1.197\,cP$ $D_{LDo_{F_K}} = 0\,in$ Low point drain $D_{Di} = 1.61\,in$ $L_c = 10\,in$ $W_c = 0.1\,in$

$H = -22.1\,ft$ $L_o = 1643\,ft$ $L_S = 655\,ft$ $L_P = 5905\,ft$ $L_{i_{F_K}} = 9\,ft$ $\varepsilon_P = 2\,mil$ $L_D(D_{Di}, F_K) = 7\,ft$ $\varepsilon_c = 1\,mil$

$\Delta Z_D = -1\,ft$ $H_o = -7.89\,ft$ $H_S = -10.5\,ft$ $F_{D3} = 1$ $L_{j_{F_K}} = 135\,ft$ $\varepsilon_S = 5\,mil$ $\varepsilon_D = 5\,mil$

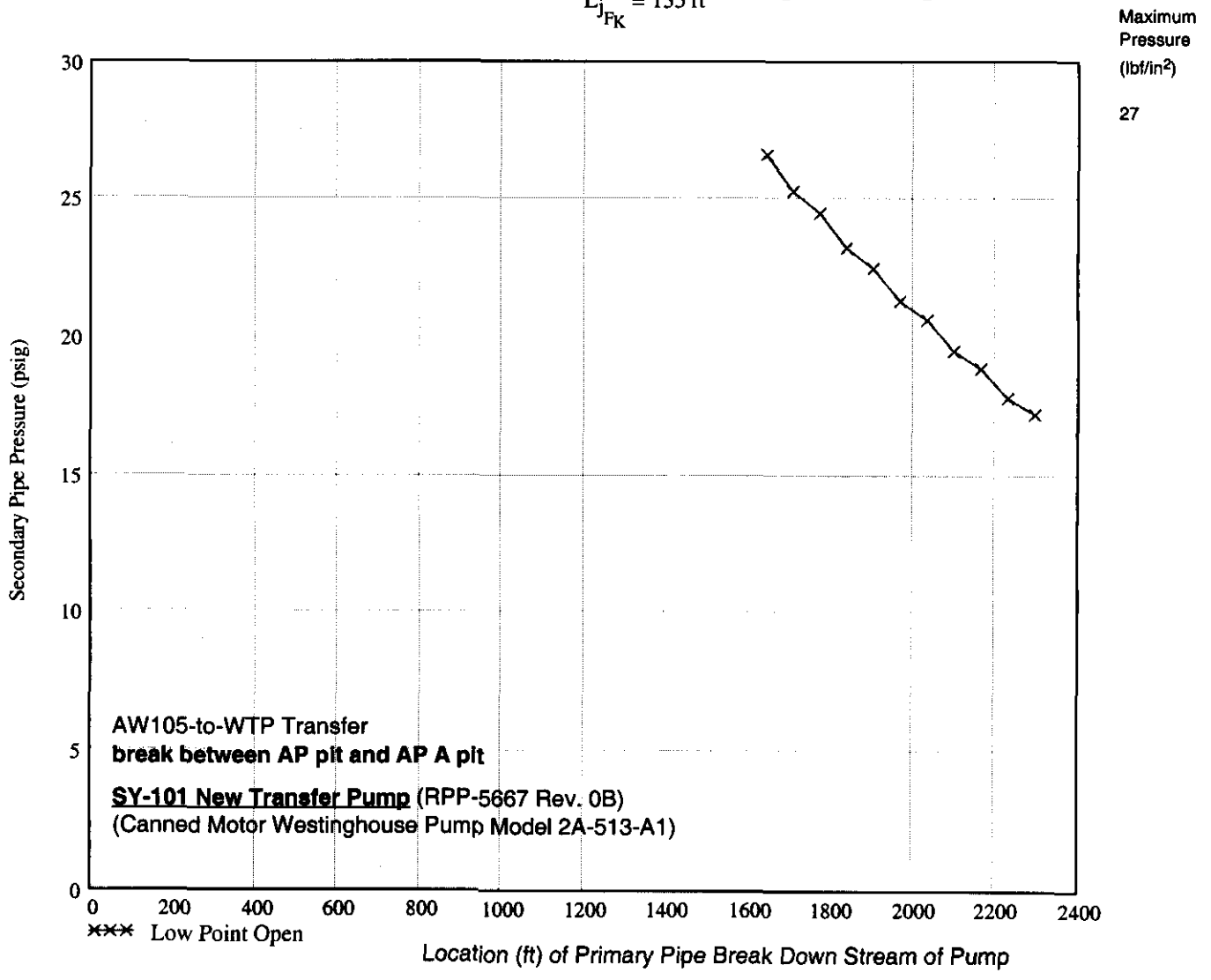

**CH2MHILL Hanford Group, Inc.**

**EVALUATION ANALYSIS**

Calc. No. RPP-LJJ-005
Revision: 0
Page No. 20 of 22

Client: CH2M Hill Hanford Group, Inc.
Subject: Secondary Encasement Pipe Pressure Due to Primary Pipe Break in Waste Tank Cross-Site Transfer Piping System
Location: 200 Area - Hanford Site, Richland, Washington

WO/Job No. _____
Date: 9/12/2001 By: L. J. Julyk
Checked: 9/25/01 By: [illegible]
Revised: _____ By: _____

**Supernate Transfer**

**Case 4 break between AP A pit and WTP interface**

| | | |
|---|---|---|
| $L_o := L_{W105.05A_APApit}$ | $L_o = 2298\,ft$ | start distance from pump of secondary encasement section under considerat |
| $H_o := Z_{APApit} - Z_{AW105.05A}$ | $H_o = -10.5\,ft$ | change in elevation of primary pipe from pump to point $L_o$ |
| $L_S := L_{APApit_WTPinterface}$ | $L_S = 2723\,ft$ | length of secondary encasement section under consideration between drains |
| $H_S := Z_{WTPinterface} - Z_{AW105.05A}$ | $H_S = -22.1\,ft$ | change in elevation of primary pipe from pump to point $L_o + L_S$ |

**use W314 guide/anchor**

Subcase X11 (low and high point drain, $F_{D6} = 1$ and $F_{D9} = 1$)*,
X10 (high point drain, FD6 = 1 and FD9 = 0)*,
X01 (low point drain, FD6 = 0 and FD9 = 1)

$D_{Di} = 1.61\,in$

**Initial guesses (X01)** $Q := 249.4 \cdot gpm$ $V_1 := \frac{Q}{A_P}$ $V_1 = 10.824\,\frac{ft}{sec}$ low velocities

$F_K = 3$ $F_{D3} = 1$ $F_{D6} := 0$ $F_{D9} := 1$

Low point drain open

$H_{P01} := H'_p(Q)$ pump head $H_{P01} = 364\,ft$

$p_2 := 67 \cdot psi$ primary pipe pressure just up stream of break

$p_3 := 67 \cdot psi$ primary pipe pressure just down stream of break

$p_5 := 37 \cdot psi$ secondary pipe pressure just up stream of break

$p_6 := 26 \cdot psi$ secondary pipe pressure at drain up stream of break

$p_8 := 37 \cdot psi$ secondary pipe pressure just down stream of break

$p_9 := 9 \cdot psi$ secondary pipe pressure at drain down stream of break

$$V_5 := \frac{V_1 \cdot F_{D6} + \Delta V}{50}$$

$$V_6 := V_5 \cdot \frac{A_{S6}(F_K)}{A_f(D_{Di})} \qquad \frac{A_{S6}(F_K)}{A_P} = 2.607$$

$$V_8 := \frac{V_1 \cdot F_{D9} + \Delta V}{4.8} \qquad \frac{A_{S6}(F_K)}{A_f(D_{Di})} = 9.46$$

$$V_9 := V_8 \cdot \frac{A_{S6}(F_K)}{A_f(D_{Di})}$$

$p_c := 20 \cdot psi$

apply conservation of mass (continuity) at break

$$V_3 := V_1 - \frac{A_{S6}(F_K)}{A_P} \cdot (V_5 + V_8) \qquad V_3 = 4.89\,\frac{ft}{sec}$$

$$V_c := \frac{A_{S6}(F_K)}{A_{crack}(L_c, W_c)} \cdot (V_5 + V_8) \qquad V_c = 43.9\,\frac{ft}{sec}$$

$$p_{01} := \begin{array}{c} (p_2 \;\; p_3 \;\; p_5 \;\; p_6 \;\; p_8 \;\; p_9 \;\; p_c)^T \\ 0 \;\; 1 \;\; 2 \;\; 3 \;\; 4 \;\; 5 \;\; 6 \end{array} \qquad V_{01} := \begin{array}{c} (V_1 \;\; V_3 \;\; V_5 \;\; V_6 \;\; V_8 \;\; V_9 \;\; V_c)^T \\ 0 \;\; 1 \;\; 2 \;\; 3 \;\; 4 \;\; 5 \;\; 6 \end{array}$$

**CH2MHILL Hanford Group, Inc.**

**EVALUATION ANALYSIS**

Calc. No. RPP-LJJ-005
Revision: 0
Page No. 21 of 22

Client: CH2M Hill Hanford Group, Inc.
Subject: Secondary Encasement Pipe Pressure Due to Primary Pipe Break in Waste Tank Cross-Site Transfer Piping System
Location: 200 Area - Hanford Site, Richland, Washington

WO/Job No. _____
Date: 9/12/2001 By: L. J. Julyk
Checked: 9/25/01 By: R. Allosse
Revised: _____ By: _____

**Case 4 (X01)**

Input==========

**SY-101 New Transfer Pump** (RPP-5667 Rev. 0B)
(Canned Motor Westinghouse Pump Model 2A-513-A1)

$L_o = 2298\,ft$ $\quad H = -22\,ft$ $\quad \varepsilon_P = 2\,mil$

$L_S = 2723\,ft$ $\quad \rho = 1.3\,\frac{kg}{liter}$ $\quad Z = 22.9\,ft$ $\quad \varepsilon_S = 5\,mil$ $\quad D_{LDo_{F_K}} = 0\,in$ $\quad F_K = 3$

$L_P = 5905\,ft$ $\quad F_{D3} = 1$ $\quad \varepsilon_D = 5\,mil$

$x_B := 0 \cdot ft + L_o$ $\quad t_C = 60\ ^\circ C$ $\quad D_{Di} = 1.61\,in$ $\quad \Delta Z_D = -1\,ft$ $\quad L_D(D_{Di}, F_K) = 7.025\,ft$ $\quad L_c = 10\,in$ $\quad W_c = 0.1\,in$ $\quad \varepsilon_c = 1\,mil$

$F_{D6} := 0$ $\quad F_{D9} := 1$ $\quad J(F_K, L_o, x_B) = 0$ $\quad N(F_K, L_o, L_S, x_B) = 20$

$I(F_K, L_o, x_B) = 0$ $\quad M(F_K, L_o, L_S, x_B) = 283$

$$\begin{pmatrix} h_{P01} \\ P_{01} \\ v_{01} \end{pmatrix} := ff(L_o, H_o, L_S, H_S, x_B, \rho, t_C, \varepsilon_P, \varepsilon_S, \varepsilon_D, D_{Di}, F_K, F_{D3}, F_{D6}, F_{D9}, \Delta Z_D, L_P, H, Z, L_c, W_c, \varepsilon_c, H_{P01}, p_{01}, V_{01})$$

$$\begin{pmatrix} P_2 \\ P_3 \\ P_5 \\ P_6 \\ P_8 \\ P_9 \\ P_{crack} \end{pmatrix} := P_{01} \quad \begin{pmatrix} v_1 \\ v_3 \\ v_5 \\ v_6 \\ v_8 \\ v_9 \\ v_{crack} \end{pmatrix} := v_{01} \qquad P_{01} = \begin{pmatrix} 59.362 \\ 60.108 \\ 32.024 \\ 22.452 \\ 31.981 \\ 8.573 \\ 16.346 \end{pmatrix} psi \quad v_{01} = \begin{pmatrix} 10.303 \\ 4.58 \\ 0 \\ 33.059 \\ 2.196 \\ 20.782 \\ 42.308 \end{pmatrix} ft\,sec^{-1}$$

Results----------

$h_{P01} = 381\,ft$ $\quad \mu(\rho, t_C) = 1.197\,cP$ $\quad L_{i_{F_K}} = 9\,ft$ $\quad L_{j_{F_K}} = 135\,ft$

$P_2 = 59.4\,psi$ $\quad v_1 = 10.3\,ft\,sec^{-1}$ $\quad A_P \cdot v_1 = 237.4\,gpm$ $\quad D_{Di} = 1.61\,in$

$P_3 = 60.1\,psi$ $\quad F_{D3} \cdot v_3 = 4.6\,ft\,sec^{-1}$ $\quad F_{D3} \cdot A_P \cdot v_3 = 105.5\,gpm$

$P_5 = 32\,psi$ $\quad v_5 = 0\,ft\,sec^{-1}$ $\quad A_{S6}(F_K) \cdot v_5 = 0\,gpm$

$P_6 = 22.5\,psi$ $\quad F_{D6} \cdot v_6 = 0\,ft\,sec^{-1}$ $\quad F_{D6} \cdot A_f(D_{Di}) \cdot v_6 = 0\,gpm$

$P_8 = 32\,psi$ $\quad v_8 = 2.2\,ft\,sec^{-1}$ $\quad A_{S6}(F_K) \cdot v_8 = 131.9\,gpm$

$P_9 = 8.6\,psi$ $\quad F_{D9} \cdot v_9 = 20.8\,ft\,sec^{-1}$ $\quad F_{D9} \cdot A_f(D_{Di}) \cdot v_9 = 131.9\,gpm$

$P_{crack} = 16.3\,psi$ $\quad v_1 \cdot A_P = F_{D3} \cdot A_P \cdot v_3 + A_{S6}(F_K) \cdot v_5 + A_{S6}(F_K) \cdot v_8 = 237.4\,gpm$

(continuity check at break, OK)

$v_{crack} = 42.3\,ft\,sec^{-1}$

$R_e(D_{H_crack}(L_c, W_c), v_{crack}, \rho, \mu(\rho, t_C)) = 7 \times 10^4$

$P_2 - P_5 = 27.339\,psi$

**CH2MHILL Hanford Group, Inc.**

**EVALUATION ANALYSIS**

Calc. No. RPP-LJJ-005
Revision: 0
Page No. 22 of 22

Client: CH2M Hill Hanford Group, Inc.
Subject: Secondary Encasement Pipe Pressure Due to Primary Pipe Break in Waste Tank Cross-Site Transfer Piping System
Location: 200 Area - Hanford Site, Richland, Washington

WO/Job No. _____
Date: 9/12/2001 By: L. J. Julyk
Checked: 9/25/01 By: [signature]
Revised: _____ By: _____

**Figure 1e. Case 4: Maximum Pressure in AW105-WTP Encasement Pipe Due to Primary Pipe Break (Between AP A pit and WTP Interface) within Encasement Section of Length $L_s$ Starting at $L_o$ Relative to Transfer Pump for Supernate Waste Transfer at Temperature of 60 °C.**

$F_K = 3$ | Low point drain | $L_c = 10\,in$

$Z = 22.9\,ft$ | $t_C = 60\ ^{\circ}C$ | $\rho = 1.3\,\frac{kg}{liter}$ | $\mu(\rho, t_C) = 1.197\,cP$ | $D_{LDo_{F_K}} = 0\,in$ | $D_{Di} = 1.61\,in$ | $W_c = 0.1\,in$

$H = -22.1\,ft$ | $L_o = 2298\,ft$ | $L_S = 2723\,ft$ | $L_P = 5905\,ft$ | $L_{i_{F_K}} = 9\,ft$ | $\varepsilon_P = 2\,mil$ | $L_D(D_{Di}, F_K) = 7\,ft$ | $\varepsilon_c = 1\,mil$

$\Delta Z_D = -1\,ft$ | $H_o = -10.5\,ft$ | $H_S = -22.1\,ft$ | $F_{D3} = 1$ | $L_{j_{F_K}} = 135\,ft$ | $\varepsilon_S = 5\,mil$ | $\varepsilon_D = 5\,mil$

Maximum Pressure (lbf/in²)

32

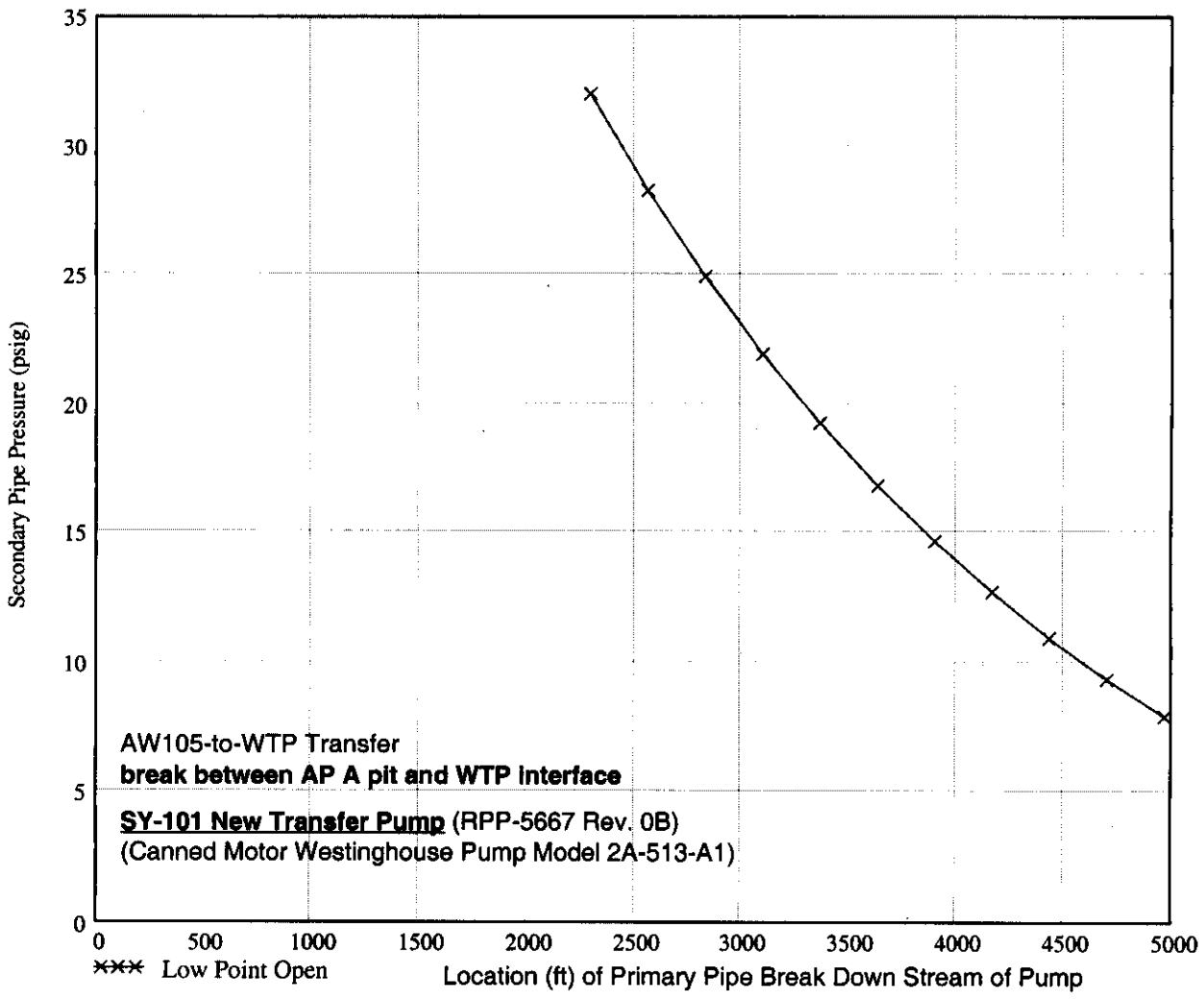

# APPENDIX D

# INDEPENDENT VERIFICATION OF ANALYSIS MODEL

---

*Results of calculations contained herein were produced in AFT Fathom (version 3). AFT is a registered trademark of Applied Flow Technology in Woodland Park, Colorado.*

This page intentionally left blank

# COMMENTARY

*The independent analysis given herein showed excellent agreement with preliminary results of the Mathcad model provided for independent review, thus verifying the Mathcad model. However, in the final calculations given in RPP-8778, there were some changes to the input parameters. The major changes are:*

- *Changes to loss factors for the W-058 guides and anchors (RCSTS piping). Table 1 compares the preliminary loss factors for the guides and anchors with the final values used RPP-8778.*

*Table 1. Comparison of W-058 Loss Factors Used in Preliminary and final calculations*

| *Item* | *Preliminary* | *Final* |
|---|---|---|
| *Guide* | *2.73* | *1.9* |
| *Anchor* | *10.85* | *17.7* |

- *Changes to pump curve. The preliminary calculation used a performance curve scaled up to a maximum delivery head of 650 feet from the performance curve for the new transfer pump installed in Tank 241-SY-101. This scaling was done to evaluate impacts of potentially higher head pumps that might be used for future transfers. In the final calculation, the motor unit head curve for the new transfer pump (canned motor Westinghouse pump model 2A-513-A1) is utilized.*

- *Change to reference elevation. The preliminary calculation used the pump pit nozzle as a reference zero elevation. For the final calculation, the reference elevation is lowered to the waste level in a full tank (using SY tank farm elevations). This reduces the available pump delivery head by 16.9 feet.*

- *Addition of loss factor for open rupture disk. The preliminary calculation does not include the loss factor for failed rupture disks. In the final calculation, drains from the RCSTS annulus are modeled to include the loss factor for the rupture disks.*

*The net effect of these differences was to reduce the predicted maximum pressure in the encasement pipe for the postulated primary pipe break by approximately 12 percent.*

This page intentionally left blank

# CORRESPONDENCE DISTRIBUTION COVERSHEET

| Author | Addressee | Correspondence No. |
|---|---|---|
| F. J. Heard, FH<br>376-6562 | L. J. Julyk, CHG | FH-010433<br>CONTRACT NO. DE-AC06-96RL13200<br>August 20, 2001 |

Subject: INDEPENDENT ANALYSIS FOR MAXIMUM SECONDARY ENCASEMENT PRESSURE FOR CROSS-SITE WASTE TRANSFER LINE

## DISTRIBUTION

| Approval | Date | Name | Location | w/att |
|---|---|---|---|---|
| | | Correspondence Control | A3-01 | X |
| | | Fluor Hanford | | |
| | | R. D. Bromm | H8-60 | X |
| | | B. A. Crea | X4-01 | X |
| | | M. J. Schliebe | L6-34 | X |
| | | FJH LB/File | | X |
| | | CH2M HILL Hanford Group, Inc. | | |
| | | A. H. Friberg | R3-83 | X |
| | | R. L. Schlosser | R3-83 | X |
| | | Numatec Hanford Corporation | | |
| | | T. J. Conrads | R3-83 | X |
| | | C. E. Graves | R3-83 | X |

A-6001-538S (02/98)

Fluor Hanford
P.O. Box 1000
Richland, Washington 99352

**FLUOR**

August 20, 2001

FH-010433
CONTRACT NO. DE-AC06-96RL13200

Mr. Larry J. Julyk, Principal Engineer
Design Engineering
CH2M HILL Hanford Group, Inc.
Post Office Box 1500
Richland, Washington 99352-1505

Dear Mr. Julyk:

INDEPENDENT ANALYSIS FOR MAXIMUM SECONDARY ENCASEMENT PRESSURE FOR CROSS-SITE WASTE TRANSFER LINE

Reference: Julyk, L. J., "Secondary Encasement Pipe Pressure Due to Primary Break in Waste Tank Cross-Site Waste Transfer Piping System," Calculation Number RPP-LJJ-005, dated May 11, 2001.

The purpose of this letter is to transmit the results of a series of independent analyses that were performed for the cross-site waste transfer line. The goal of these analyses was to determine the maximum secondary encasement pressure should a primary pipe break occur between the SY-A valve pit and the 6412-A diversion box during waste transfer operations. The results of these analyses are specific for the cross-site waste transfer line between tanks SY-102 and AP-107.

A significant emphasis was placed on reviewing the analysis techniques and equations that were used in the reference calculation RPP-LJJ-005 to calculate the loss coefficients for various support and anchor components, as well as the pipe break. An independent pipe break network flow model was developed to confirm the maximum secondary encasement pressure with and without primary flow for various combinations of secondary drains.

The attached results indicate a maximum secondary encasement pressure of approximately 200 psig. A comparison of the results from the reference (RPP-LJJ-005) with the subject analyses show very good agreement considering the complexity of the analyses, the assumed crack geometry, and lengths of the cross-site transfer line. This indicates that the results documented within RPP-LJJ-005, are consistent with the documented pipe break flow model and are representative of expected conditions should a pipe break occur.

If there are any questions, please call me at 376-6562.

Sincerely,

F. J. Heard, Engineer II
Engineering Analysis

**CONCURRENCE**

M. J. Schliebe, Manager
Engineering Laboratory

8/20/01
Date

rw

Attachment

# INDEPENDENT ANALYSIS FOR MAXIMUM SECONDARY ENCASEMENT PRESSURE FOR CROSS-SITE WASTE TRANSFER LINE

## 1.0 INTRODUCTION AND PURPOSE

An independent review was performed of the Double-Shell Tank (DST) encasement pressure drop analysis (RPP-LJJ-005). The independent review consisted of line-by-line check the calculated results and comparison against text book values and the development of a pipe break network flow model.

The purpose of this letter report is to document the results of the independent pipe break network flow analyses. The goal of the independent analyses is to provide an alternate mechanism to determine the maximum secondary encasement pressure should a pipe break occur within the primary transfer line between the SY-A transfer pit and diversion box 6241-A during waste transfer operations. The results of these analyses are specific for the cross-site waste transfer line between tanks SY-102 and AP-107.

## 2.0 SCOPE OF REVIEW

A significant emphasis was placed on reviewing the analysis techniques and equations, as documented within the reference calculation (RPP-LJJ-005), that were used to calculate the loss coefficients for the various support and anchor components, as well as the pipe break. Fundamental references were used to confirm the calculated friction factors and component loss coefficients. An independent pipe break network flow model was developed to confirm the maximum secondary encasement pressure with and without primary flow and for various combinations of secondary drains. Two cases from the subject pressure drop analysis were simulated. The results are presented in Section 5.0.

## 3.0 CODE DESCRIPTION - FATHOM

FATHOM is an incompressible steady-state one-dimensional Newtonian fluid network flow analysis program. FATHOM was obtained from Applied Flow Technology, Woodlawn Park, Colorado. FATHOM has been validated and verified for use for quality affecting analyses at Hanford (Heard 2000).

FATHOM employs two fundamental constructs: pipes (P) and junctions (J). Pipes are conduits for steady state, incompressible, one-dimensional fluid flow. The mass flow rate through the entire length of the pipe is always constant. Junctions are connector points for pipes at which flow balances are made. Each pipe must be connected to two junctions. Currently there are twenty junction types.

FATHOM can be used to model a variety of engineering systems including:

- Open and closed (recirculating) systems
- Network systems that branch or loop, with no limit on the number of loops
- Pressure and/or gravity feed systems
- Pumped systems, including multiple pumps in parallel and/or in series

- Pumps with variable speed, controlled discharge pressure, and viscosity corrections
- Systems with pressure and/or flow control valves
- Systems with valves closed or pumps turned off
- Systems with heat exchangers
- Systems heat transfer from external surfaces

With FATHOM, users can create a graphical representation of the piping network using a drag-and-drop interface from a palette of pipe system components. Multiple units of measurement are available for input and output, which helps minimize conversion errors.

FATHOM works almost exclusively with the concept of a loss factor, also known as a K factor or resistance. Loss factors are area dependent. FATHOM provides hundreds of standard loss models based on well known references such as; Crane (1988), Idelchik (1994), and Miller (1990), but also allows the user to enter there own loss data. Variable or dynamic loss models that depend on flow, area ratios, and/or flow splits (such as tees and wyes), and the angle of the connecting pipes are also supported. FATHOM also provides automatic calculation of friction factors using the Colebrook-White correlation. Loss factors can be applied in two ways: point losses associated with junctions, or distributed losses associated with a pipe. Distributed losses are assumed distributed evenly along the pipe length, much like friction losses.

FATHOM also provides an extensive database of thermo-physical properties for numerous fluids and gases. Fluid density and dynamic viscosity must be specified for all analyses. Fluid vapor pressure is an optional specification. These properties can be entered by hand or can be obtained from the material database. FATHOM allows the fluid properties to be entered in whatever units you find most convenient.

FATHOM uses a Newton-Raphson method to solve the fundamental equations of pipe flow that govern conservation of mass (continuity), momentum, and energy. Solutions are obtained by iterative matrix methods that have been optimized for speed and convergence.

## 4.0 MODEL DEVELOPMENT AND ASSUMPTIONS

A pipe break network flow model was developed using FATHOM. The network flow model used design data from RPP-LJJ-005 to model the cross-site waste transfer line. Figure 4-1 presents a line diagram of the pipe break network flow model.

The cross-site waste transfer line consists of pipe-within-a-pipe: an inner (primary) waste transfer line encased by a larger outer (secondary) pipe. The annular area between the primary and secondary pipes is nominally dry and free from waste. The pipe break network flow model treated the annular piping arrangement as two separate parallel pipes connected by a sharp-edged orifice (J5) that could be positioned anywhere along the cross site transfer line. The orifice was assumed to have a flow area of 1 square inch and was assumed to approximate a break in the primary pipe.

# INDEPENDENT ANALYSIS FOR MAXIMUM SECONDARY ENCASEMENT PRESSURE FOR CROSS-SITE WASTE TRANSFER LINE

The orifice loss factor based on the upstream flow area was calculated by the following equation (Idelchik 1994, page 218) for turbulent Reynolds Numbers:

$$K = \left(\frac{Aup}{Aorifice}\right)^2 \left[0.707\left(1-\frac{Aorfice}{Aup}\right)^{0.375} + \left(1-\frac{Aorfice}{Adown}\right)\right]^2 \quad \text{(EQU 4-1)}$$

The primary pipe extends from the SY-102 transfer pump pit to tank AP-107 with a total length of 51015 feet. The section containing the location of the postulated pipe break extends from the SY-A valve pit (339 feet) to the 6241-A diversion box (5974 feet). The primary pipe was assumed to be 3-inch Schedule 40 stainless steel (3.5-inches OD, 3.068-inches ID) with an absolute roughness of 0.002 inches. The secondary encasement pipe was assumed to be 6-inch Schedule 40 carbon steel (6.625-inches OD, 6.028-inches ID) with an absolute roughness of 0.005 inches. The secondary encasement pipe was treated as an annular pipe with the appropriate flow area and wetted perimeter.

The secondary encasement pipe is assumed to have two drain lines (2-inch Schedule 40, 2.375-inches OD, 2.067-inches ID) located at the SY-A valve pit and at the 6241-A diversion box. Each of the drain lines was assumed to have an equivalent length of 8.2 feet with an outlet expansion loss coefficient of 1.0 and an assumed absolute roughness of 0.005 inches.

The annulus between the primary waste pipe and the secondary encasement pipe contains numerous pipe supports, pipe anchors, and a leak detection cable. The pipe supports and anchors were assumed uniformly spaced along the length of the waste transfer line. The leak detection cable (0.75-inches OD) was assumed to run the entire length of the waste transfer line. It was determined that 10 anchors and 460 supports are located within the line break section between the SY-A valve pit and the 6241-A diversion box. The loss factors due to the anchors (K=10.85) and supports (K=2.73) were approximated from the corresponding losses of long-hole orifice plates (Idelchik 1994, page 219) and are based on the secondary encasement pipe annular flow area. This allowed the upstream and downstream loss factors for the secondary encasement pipe to be summed as a series resistance and distributed depending on the location of the pipe break.

The pipe break flow model also includes specifications for a new transfer pump (NTP) (canned motor Westinghouse pump model 2A-513-A1) that determines the pressure (head) that is added to the system. The pump head (feet of water) versus volumetric flow (gal/min) characteristics for the NTP were obtained from page 6 of RPP-LJJ-005 and are presented in Table 4-1.

**Table 4-1 New Transfer Pump Head vs. Flow**

| Number | Pump Head (ΔH) (ft) | Flow (Q) (GPM) |
|---|---|---|
| 1 | 650.0 | 0 |
| 2 | 650.0 | 40 |
| 3 | 624.5 | 80 |
| 4 | 599.0 | 120 |
| 5 | 554.4 | 160 |
| 6 | 535.3 | 180 |
| 7 | 471.6 | 220 |

The following paragraphs refer to Figure 4-1. Junction 1 is an infinite flow reservoir for Junction 2 the new transfer pump. Junctions representing pumps must have a mass source. Junction 13 is a zero loss branch and marks the beginning of the pipe break section. Junction 3 is a zero loss branch that provides an inlet leg to Junction 5 the pipe break orifice. Junction 14 is the 6412-A diversion box and marks the end of the postulated pipe break section. Junction 4 is the primary waste transfer line outlet discharge at tank AP-107. The primary pipe is assumed to discharge to an assigned pressure of 14.35 psia (Hanford average) with an outlet expansion loss coefficient of 1.0.

Junction 6 corresponds to a zero loss branch that diverts flow both downstream and upstream within the secondary encasement annular flow area. Junctions 7 and 10 represent tee fittings for the downstream and upstream drain lines, respectively. Junctions 8 and 11 represent the remainder of the secondary encasement pipe as dead ends. Junction 9 and 12 represent the discharge point of the two drain lines. Each drain line is assumed to discharge to an atmospheric pressure of 14.35 psia (Hanford average) with an outlet expansion loss coefficient of 1.0.

Pipes P2 and P6 represent the primary waste transfer line and the secondary encasement line downstream of the assumed break location. Pipes P3 and P9 represent primary waste transfer line and the secondary encasement line upstream of the assumed break location. As previously discussed the downstream and upstream loss factors for the secondary encasement pipe distributed depending on the location of the pipe break.

A user option allows junctions and pipes to be closed to flow. This allowed a series of simulations to be performed with and without flow through the primary pipe upstream of the assumed break location and various combinations of open or closed drain lines within the secondary encasement section.

Case 1 from RPP-LJJ-005 was chosen as a representative calculation with (FD3=1) and without (FD3=0) flow through the primary pipe. (The term FD3 was used in the reference analysis as a flow multiplier for flow through the primary pipe downstream from the location of the pipe break.) The pipe length (5635 feet) between the SY-A valve pit and the 6412-A diversion box was divided into ten intervals with eleven points. Each was point represented a pipe break location. Three analyses were performed at each point: 1) both drains open, 2) downstream drain open (upstream closed), and 3) upstream drain open (downstream closed).

## 5.0 RESULTS

Tables 5-1 and 5-2 summarize the results of the network flow analyses for a series of simulated primary pipe breaks and locations. Table 5-1 presents the maximum secondary encasement pressure versus break location with primary flow. Table 5-2 presents the maximum secondary encasement pressure versus break location without primary flow. Tables 5-1 and 5-2 also summarize the location and elevation of the assumed break, as well as the secondary pressure loss factors associated with the downstream and upstream annular pipe anchors and supports.

From Table 5-1 the maximum secondary encasement pressure with primary flow was determined to be approximately 170 psig. This value was obtained for the case with the upstream drain open

(downstream closed) and a primary pipe break location just one foot upstream of the SY-A valve pit. These conditions maximized both the flow resistance to the open drain and the secondary encasement pressure. This can be compared with the results from RPP-LJJ-005, which indicate a maximum secondary encasement pressure of approximately 177 psig.

From Table 5-2 the maximum secondary encasement pressure without primary flow was determined to be approximately 200 psig. This value was obtained for the case with the upstream drain open (downstream closed) and a primary pipe break location just one foot upstream of the SY-A valve pit. These conditions maximized both the flow resistance to the open drain and the secondary encasement pressure. This can be compared with the results from RPP-LJJ-005, which indicate a maximum secondary encasement pressure of approximately 209 psig.

**TABLE 5-1. MAXIMUM SECONDARY ENCASEMENT PRESSURE VS. LOCATION OF BREAK WITH PRIMARY FLOW**

| No. | Location of Break (ft) | Elevation Of Break (ft) | Secondary Loss Factor | | Maximum Secondary Encasement Pressure (psig) | | |
|---|---|---|---|---|---|---|---|
| | | | Downstream | Upstream | Both Drains Open | Downstream Drain Open* | Upstream Drain Open** |
| 1 | 340.0 | 671.2 | 0.2 | 1362.1 | 13.5 | 18.7 | 169.7 |
| 2 | 902.5 | 672.1 | 136.2 | 1226.1 | 22.5 | 39.2 | 147.3 |
| 3 | 1466.0 | 673.0 | 272.5 | 1089.8 | 25.8 | 52.1 | 127.1 |
| 4 | 2029.5 | 673.9 | 408.7 | 953.6 | 26.3 | 60.7 | 108.9 |
| 5 | 2593.0 | 674.8 | 544.9 | 817.4 | 25.3 | 66.5 | 92.2 |
| 6 | 3156.6 | 675.7 | 681.2 | 681.2 | 23.3 | 70.5 | 76.8 |
| 7 | 3720.0 | 676.7 | 817.4 | 544.9 | 20.7 | 73.3 | 62.5 |
| 8 | 4283.5 | 677.6 | 953.6 | 408.7 | 17.4 | 75.2 | 49.0 |
| 9 | 4847.0 | 678.5 | 1089.8 | 272.5 | 13.6 | 76.4 | 36.1 |
| 10 | 5410.5 | 679.4 | 1226.1 | 136.2 | 9.1 | 77.2 | 23.8 |
| 11 | 5973.0 | 680.3 | 1362.1 | 0.2 | 3.5 | 77.5 | 11.8 |

*** Junction J12 closed, Junction J9 open**
**** Junction J9 closed, Junction J12 open**

**TABLE 5-2. MAXIMUM SECONDARY ENCASEMENT PRESSURE VS. LOCATION OF BREAK WITHOUT PRIMARY FLOW**

| No. | Location of Break (ft) | Elevation Of Break (ft) | Secondary Loss Factor | | Maximum Secondary Encasement Pressure (psig) | | |
|---|---|---|---|---|---|---|---|
| | | | Downstream | Upstream | Both Drains Open | Downstream Drain Open* | Upstream Drain Open** |
| 1 | 340.0 | 671.2 | 0.2 | 1362.1 | 15.9 | 22.5 | 200.0 |
| 2 | 902.5 | 672.1 | 136.2 | 1226.1 | 27.4 | 48.2 | 178.9 |
| 3 | 1466.0 | 673.0 | 272.5 | 1089.8 | 31.9 | 65.5 | 158.3 |
| 4 | 2029.5 | 673.9 | 408.7 | 953.6 | 33.1 | 77.8 | 138.4 |
| 5 | 2593.0 | 674.8 | 544.9 | 817.4 | 32.3 | 87.0 | 119.1 |
| 6 | 3156.6 | 675.7 | 681.2 | 681.2 | 30.2 | 94.0 | 100.3 |
| 7 | 3720.0 | 676.7 | 817.4 | 544.9 | 27.1 | 99.5 | 82.0 |
| 8 | 4283.5 | 677.6 | 953.6 | 408.7 | 23.1 | 104.3 | 64.3 |
| 9 | 4847.0 | 678.5 | 1089.8 | 272.5 | 18.3 | 107.4 | 47.1 |
| 10 | 5410.5 | 679.4 | 1226.1 | 136.2 | 12.4 | 110.3 | 30.4 |
| 11 | 5973.0 | 680.3 | 1362.1 | 0.2 | 5.0 | 112.7 | 14.2 |

*** Junction J12 closed, Junction J9 open**
**** Junction J9 closed, Junction J12 open**

Figures 5-1 and 5-2 present a comparison of the results obtained from RPP-LJJ-005 and the subject analyses. The break locations assumed for RPP-LJJ-005 differ slightly from the subject analyses. However, very good agreement was noted. The maximum difference occurred for the first primary break location nearest to the SY-A valve pit. Very close agreement was noted over the entire range of break locations for the cases with both drains open and the just the downstream drain open.

## 6.0 CONCLUSIONS

The results from Tables 5-1 and 5-2 indicate that the maximum secondary encasement pressure is approximately 209 psig. A comparison of the results from RPP-LJJ-005 and the subject analyses, as shown in Figures 5-1 and 5-2, show very good agreement considering the complexity of the analyses, the assumed crack geometry, and lengths of the cross-site transfer line. This indicates that the analysis techniques documented within RPP-LJJ-005 are consistent with the pipe break flow model and are representative of expected conditions should a pipe break occur. Small differences in the calculated friction factors, the number of support components, and the calculated loss coefficients will have an affect on the maximum encasement pressure.

## 7.0 REFERENCES

Calculation number RPP-LJJ-005, Revision 0, L. J. Julyk, dated May 11, 2001.

"Flow of Fluids Through Valves, Fittings, and Pipe", Technical Paper Number 410, Crane Company, Chicago, Illinois, 1991.

Heard, F. J., "FATHOM (Version 3) – "Commercial Software Validation and Configuration Control," SNF-5332, Revision 0, Fluor Hanford, Inc., released January 20, 2000.

Idelchik, I. E., "Handbook of Hydraulic Resistance", Third Edition, CRC Press, Ann Arbor, Michigan, 1994.

Miller, D. S., "Internal Flow Systems", Second Edition, Published by BHRA (Information Services), Cranfield, UK, 1990.

**Figure 4-1. Line Diagram For Pipe Break Network Flow Model**

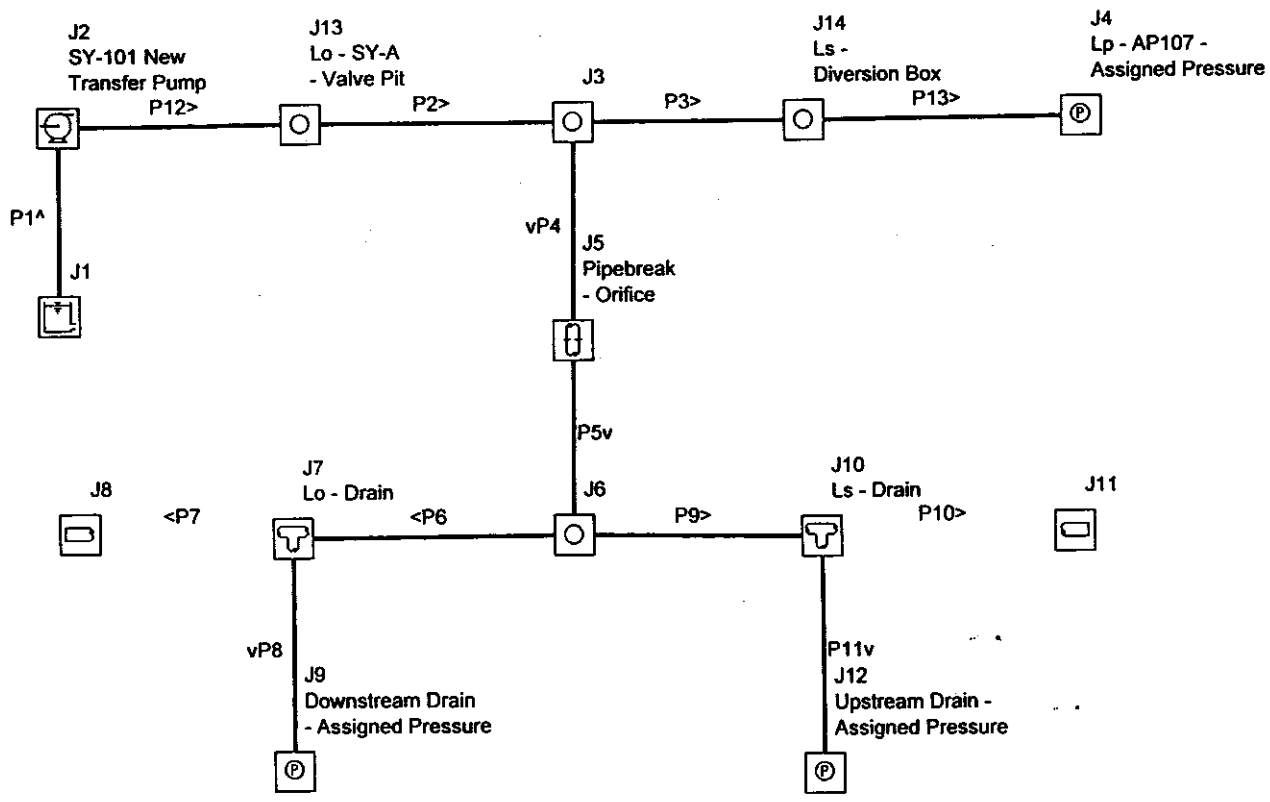

**Figure 5-1. Maximum Secondary Encasement Pressure Vs. Location of Break With Primary Flow For Various Combinations of Drains**

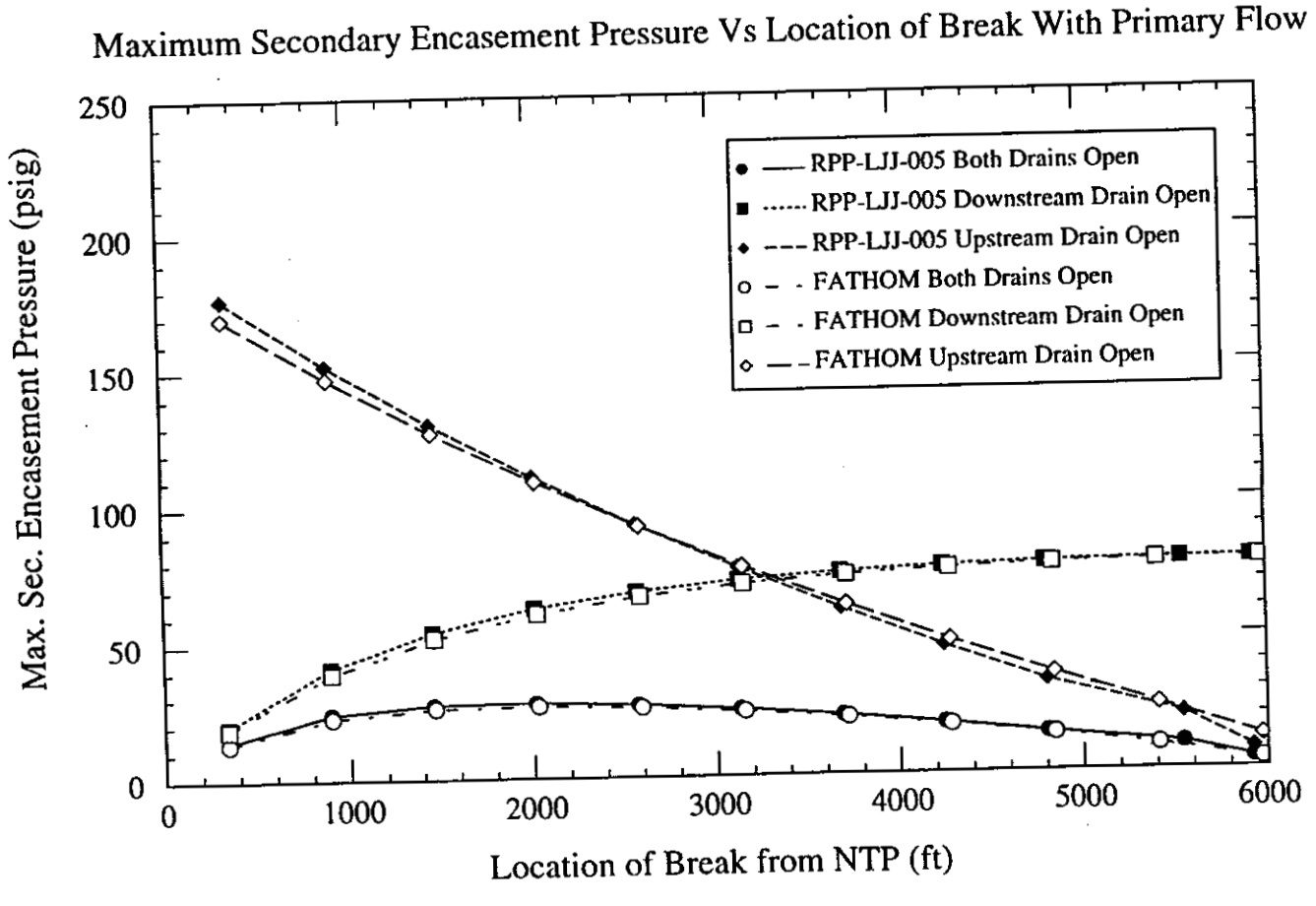




TempleGraph 2.8, Origin: h1737d46@cea6.rl.gov - Wed Aug 15 08:50:18 2001 (data file was compare1a2)

**Figure 5-2. Maximum Secondary Encasement Pressure Vs. Location of Break Without Primary Flow For Various Combinations of Drains**

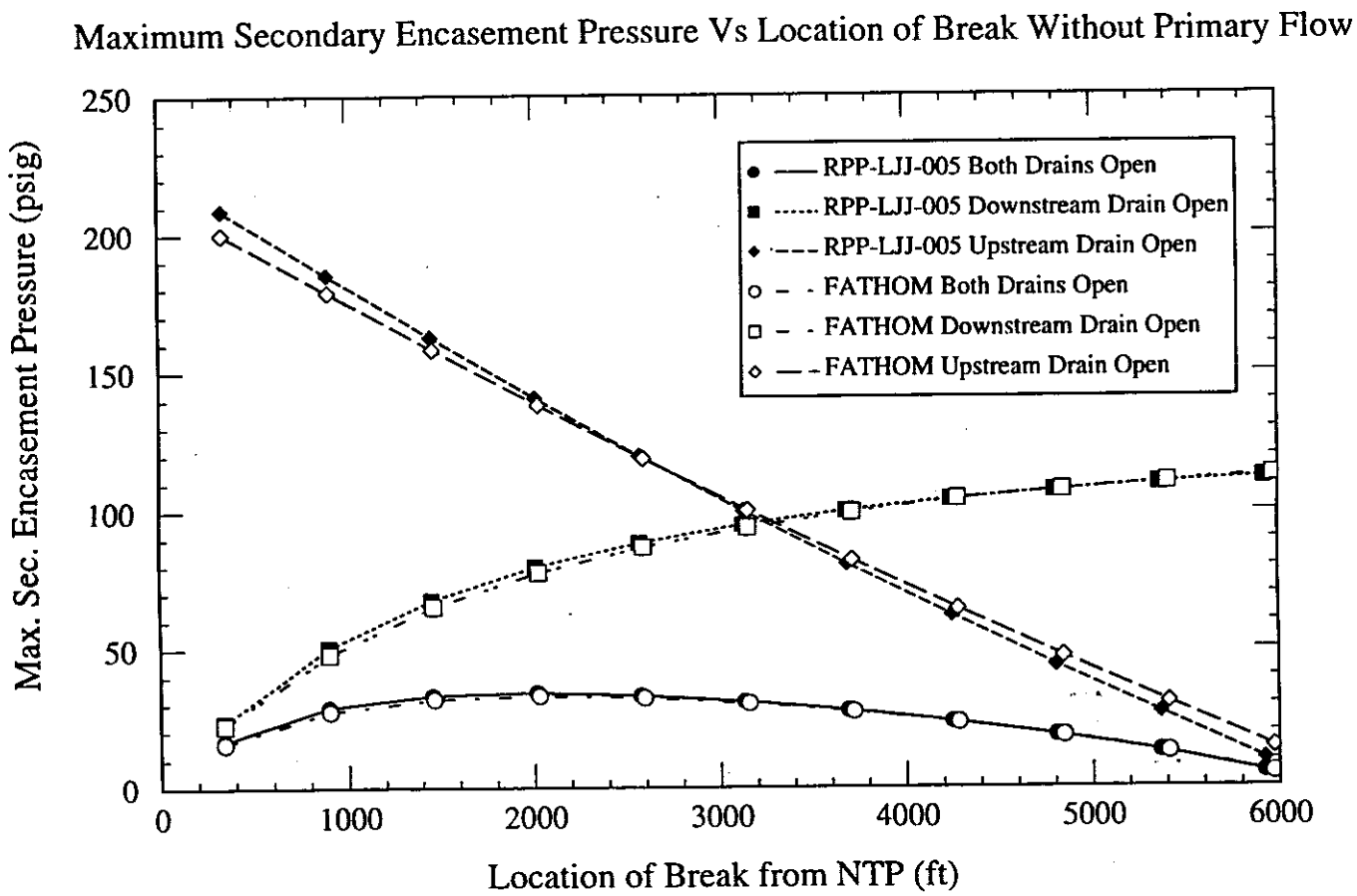




TempleGraph 2.8, Origin: h1737446@cea6.rl.gov - Wed Aug 15 08:55:41 2001 (data file was case1b.dat)