This document was too large to scan as a single document. It has been divided into smaller sections.

Section 1 OF 2

Document Information			
Document #	RPP-7526	Revision	2
Title	PRELIMINARY ENGINEERING REPORT FOR THE S12 SALTCAKE WASTE RETRIEVAL TECHNOLOGY DEMONSTRATION PROJECT		
Date	12/13/2001		
Originator	HANSON CE	Originator Co.	COGEMA
Recipient		Recipient Co.	
References	EDT-665994		
Keywords			
Projects			
Other Information			

S

ENGINEERING CHANGE NOTICE

Page 1 of 2

1. ECN 665994

Proj. ECN

2. ECN Category (mark one)	3. Originator's Name, Organization, MSIN, and Telephone No.	4. USQ Required?	5. Date
Supplemental ☐ Direct Revision ☒ Change ECN ☐ Temporary ☐ Standby ☐ Supersedure ☐ Cancel/Void ☐	N. S. Cannon, Single-Shell Tank Projects, R4-01, 376-0562	☐ Yes ☒ No	December 12, 2001
	6. Project Title/No./Work Order No. S-112 Saltcake Waste Retrieval Technology Demonstration Project	7. Bldg./Sys./Fac. No. 241-S-112	8. Approval Designator Q
	9. Document Numbers Changed by this ECN (includes sheet no. and rev.) RPP-7526, Rev. 1	10. Related ECN No(s). NA	11. Related PO No. NA

12a. Modification Work	12b. Work Package No.	12c. Modification Work Completed	12d. Restored to Original Condition (Temp. or Standby ECNs only)
☐ Yes (fill out Blk. 12b) ☒ No (NA Blks. 12b, 12c, 12d)	NA	NA Design Authority/Cog. Engineer Signature & Date	NA Design Authority/Cog. Engineer Signature & Date

13a. Description of Change — 13b. Design Baseline Document? ☐ Yes ☒ No

Complete revision of previous document RPP-7526, Rev. 1, "Preliminary Engineering Report for the 241-S-112 Retrieval System" with a new revision RPP-7526, Rev. 2. The title of the revised document is changed to "Preliminary Engineering Report for the S-112 Saltcake Waste Retrieval Technology Demonstration Project."

14a. Justification (mark one)	14b. Justification Details
Criteria Change ☒ Design Improvement ☐ Environmental ☐ Facility Deactivation ☐ As-Found ☐ Facilitate Const. ☐ Const. Error/Omission ☐ Design Error/Omission ☐	Revision to accommodate changes in the baseline and cost estimate. No USQ screening is required for this change, per HNF-IP-0842, Vol. IV, Sec. 5.4, Rev. 13f. ~~categorical exclusion TF-96-0690, Rev. 2.~~ 12/12/01

15. Distribution (include name, MSIN, and no. of copies)

See attached distribution sheet.

RELEASE STAMP

DEC 13 2001

DATE: HANFORD RELEASE

STA: 4 ID: 21

ENGINEERING CHANGE NOTICE

1. ECN (use no. from pg. 1): 665994

16. Design Verification Required	17. Cost Impact				18. Schedule Impact (days)	
	ENGINEERING		CONSTRUCTION			
☐ Yes	Additional ☐	$ n/a	Additional ☐	$ n/a	Improvement ☐	n/a
☒ No	Savings ☐	$ n/a	Savings ☐	$ n/a	Delay ☐	n/a

19. Change Impact Review: Indicate the related documents (other than the engineering documents identified on Side 1) that will be affected by the change described in Block 13. Enter the affected document number in Block 20.

SDD/DD	☐	Seismic/Stress Analysis	☐	Tank Calibration Manual	☐
Functional Design Criteria	☐	Stress/Design Report	☐	Health Physics Procedure	☐
Operating Specification	☐	Interface Control Drawing	☐	Spares Multiple Unit Listing	☐
Criticality Specification	☐	Calibration Procedure	☐	Test Procedures/Specification	☐
Conceptual Design Report	☐	Installation Procedure	☒	Component Index	☐
Equipment Spec.	☐	Maintenance Procedure	☐	ASME Coded Item	☐
Const. Spec.	☐	Engineering Procedure	☐	Human Factor Consideration	☐
Procurement Spec.	☒	Operating Instruction	☒	Computer Software	☐
Vendor Information	☐	Operating Procedure	☐	Electric Circuit Schedule	☐
OM Manual	☐	Operational Safety Requirement	☐	ICRS Procedure	☐
FSAR/SAR	☐	IEFD Drawing	☐	Process Control Manual/Plan	☐
Safety Equipment List	☐	Cell Arrangement Drawing	☐	Process Flow Chart	☐
Radiation Work Permit	☐	Essential Material Specification	☐	Purchase Requisition	☐
Environmental Impact Statement	☐	Fac. Proc. Samp. Schedule	☒	Tickler File	☐
Environmental Report	☒	Inspection Plan	☐	None	☒
Environmental Permit	☐	Inventory Adjustment Request	☒		☐

20. Other Affected Documents: (NOTE: Documents listed below will not be revised by this ECN.) Signatures below indicate that the signing organization has been notified of other affected documents listed below.

Document Number/Revision	Document Number/Revision	Document Number/Revision
n/a	n/a	n/a

21. Approvals

	Signature	Date		Signature	Date
Design Authority	W.F. Zuroff	12/12/01	Design Agent		
Cog. Eng.	J.N. Doeler	12/12/01	PE		
Cog. Mgr.	M.J. Sutey	12/13/01	QA		
QA	J.F. Bores	12/12/01	Safety		
Safety	N/A		Design		
Environ.	N/A		Environ.		
Other			Other		
	C.E. Hanson	12/12/01			
	R.E. Bauer	12/13/01			

DEPARTMENT OF ENERGY

Signature or a Control Number that tracks the Approval Signature

ADDITIONAL

RECORD OF REVISION

(1) Document Number: RPP-7526

(2) Title: Preliminary Engineering Report for the 241-S-112 Retrieval System

Change Control Record

(3) Revision	(4) Description of Change - Replace, Add, and Delete Pages	Authorized for Release	
		(5) Cog. Engr.	(6) Cog. Mgr. Date
1	(7) Revised per ECN 668492	JN Doeler	WJ Thompson
2 RS	Revised per ECN 665994 ECN-668493 12-13-01	JN Doeler 12/13/01	MJ Sutey 12/13/01

A-7320-005 (10/97)

DISTRIBUTION SHEET

To	From	Page 1 of 1
Distribution	SST Projects	Date 12/12/01
Project Title/Work Order		EDT No.
S-112 Saltcake Waste Retrieval Technology Demonstration Project		ECN No. 665994

Name	MSIN	Text With All Attach.	Text Only	Attach./ Appendix Only	EDT/ECN Only
B.B. BARTON	R2-11	X			
R.E. BAUER	R4-01	X			
J.R. BIGGS	R4-08	X			
J.F. BORES	R2-87	X			
B.E. BRENDEL	S7-90	X			
J.W. CAMMAN	R2-39	X			
R.M. BOGER	S7-12	X			
J.N. DOELER	T4-07	X			
S.C. DENISON	S7-90	X			
S.C. ESTEY	R2-11	X			
C.E. HANSON	R4-09	X			
J.P. HARRIS III	R1-49	X			
W.J. KENNEDY	T4-07	X			
T.E. RAINEY	R4-01	X			
R.W. ROOT	T6-29	X			
R.D. SMITH	R1-49	X			
M.J. SUTEY	T4-07	X			
S.L. SWANEY	S7-24	X			
W.T. THOMPSON	S7-90	X			
R.W. WILSON	S7-90	X			
D.T. VLADIMIROFF	S7-20	X			
A.C. YOUNGBLOOD	S7-20	X			
W.F. ZUROFF	S7-24	X			
OFFICE OF RIVER PROTECTION					
E.J. CRUZ	H6-60	X			
R.W. LOBER	H6-60	X			

PRELIMINARY ENGINEERING REPORT FOR THE S-112 SALTCAKE WASTE RETRIEVAL TECHNOLOGY DEMONSTRATION PROJECT

C.E. Hanson
COGEMA ENGINEERING CORPORATION
Richland, WA 99352
U.S. Department of Energy Contract DE-AC27-99RL14047

EDT/ECN: 665994 UC: 701
Cost Center: 92501 Charge Code: 114105
B&R Code: Total Pages: 381

Key Words: S-112 Saltcake Waste Retrieval, Dissolution, Preliminary Engineering Report, Technology Demonstration

Abstract: This report provides a programmatic planning basis for the S-112 full-scale demonstration of in-tank dissolution and retrieval of waste. The retrieval method is defined, as is the infrastructure and process equipment. The project, as currently scoped, is predominately based on SSCs utilized in the Interim Stabilization Project. The current project cost and schedule is also included.

TRADEMARK DISCLAIMER. Reference herein to any specific commercial product, process, or service by trade name, trademark, manufacturer, or otherwise, does not necessarily constitute or imply its endorsement, recommendation, or favoring by the United States Government or any agency thereof or its contractors or subcontractors.

Printed in the United States of America. To obtain copies of this document, contact: Document Control Services, P.O. Box 950, Mailstop H6-08, Richland WA 99352, Phone (509) 372-2420; Fax (509) 376-4989.

DEC 13 2001
DATE:
STA: 4
HANFORD RELEASE
ID: 21

12-13-01

Release Approval Date Release Stamp

Approved For Public Release

PRELIMINARY ENGINEERING REPORT FOR THE S-112 SALTCAKE WASTE RETRIEVAL TECHNOLOGY DEMONSTRATION PROJECT

RPP-7526, Revision 2

Prepared for: CH2MHill Hanford Group, Inc.
Richland, WA 99352

Revision 2
Prepared by: COGEMA Engineering Corporation
P.O. Box 840
Richland, WA 99352-0840

Revision 0, 1
Prepared by: DMJM Holmes & Narver
3250 Port of Benton
Richland, WA 99352

EXECUTIVE SUMMARY

This Preliminary Engineering Report provides a programmatic planning basis for the proposed full-scale demonstration testing of in-tank dissolution and subsequent recovery of saltcake waste from Hanford's Single-Shell Tank 241-S-112. The results of this demonstration will provide valuable data to support the development of production-level dissolution retrieval systems that can be deployed to recover the contents from other saltcake single-shell tanks. The Hanford Federal Facility Agreement and Consent Order, a.k.a. the Tri-Party Agreement, establishes milestones for life-cycle activities required to complete a full-scale saltcake waste retrieval technology demonstration in 241-S-112. The technical, cost and schedule information presented in this report are specific to 241-S-112; however, much of the information could also be directly applied to other saltcake single-shell tanks.

The retrieval method selected for the 241-S-112 demonstration introduces water into the tank in a controlled manner using dispersion nozzles to promote dissolution of the soluble waste salts. The resulting waste solution can then be readily pumped from the single-shell tank to a more reliable double-shell tank. Studies have identified this approach as a viable technique to effectively recover soluble waste types. Dissolution retrieval has the potential to cost effectively recover a significant portion of the current Hanford single-shell tank waste inventory, thereby reducing the risk of further contamination of the Hanford soil column, groundwater, and Columbia River.

The infrastructure, process equipment, and manpower required to deploy and operate the retrieval system is relatively modest when compared to other baseline SST retrieval methods (e.g., sluicing). The system is predominantly based on the systems, structures, and components utilized by the Interim Stabilization Project. A temporary water distribution system will be provided to allow the addition of solvent (water) into 241-S-112. The pre-conceptual design configuration utilizes three symmetrically oriented sprinkler assemblies, installed through existing risers in the tank dome, to initiate and maintain the waste dissolution process. Equipment designs currently used to support saltwell pumping will be used, with minor modifications, to provide liquid retrieval systems for the dissolved waste solution and to pump it to a double-shell tank receiver in

the 241-SY Farm. Controls and interlocks will be provided to ensure proper coordination between the water distribution system and liquid retrieval system, as well as with other interfacing systems. The transfer pipeline system supporting the technology demonstration will utilize existing buried, encased transfer lines and pit jumpers, as well as temporary hose-in-hose transfer lines, to transport the pumped waste solution from 241-S-112 to the 241-SY Farm.

The rough-order-of-magnitude estimate of the Total Project Cost for this project, including activities beginning with initial project definition through hot operations and subsequent deactivation of the dissolution retrieval system, is approximately $32.5 million. The preliminary project schedule developed for this effort indicates that the saltcake dissolution retrieval systems can be deployed, tested, and operated to support the M-45-03C completion milestone of September 30, 2005. Tank S-112 is scheduled for saltwell pumping by the Interim Stabilization Project in November 2002 to meet the Tri-Party Agreement.

PRELIMINARY ENGINEERING REPORT FOR THE S-112 SALTCAKE WASTE RETRIEVAL TECHNOLOGY DEMONSTRATION PROJECT

Table of Contents

1.0 INTRODUCTION 1-1
- 1.1 Mission 1-1
- 1.2 Purpose 1-2
- 1.3 Scope 1-2
- 1.4 Background 1-3
  - 1.4.1 Existing 241-S-112 Configuration and Conditions 1-3
  - 1.4.2 Existing 241-SY Farm Tank Configuration and Conditions 1-6
  - 1.4.3 Existing Waste Transfer Piping System 1-7
  - 1.4.4 Master Pump Shutdown System 1-10
  - 1.4.5 Monitoring and Control System 1-10
- 1.5 Project Interfaces 1-10

2.0 PROCESS & OPERATIONAL DESCRIPTION 2-1
- 2.1 Process Overview 2-1
  - 2.1.1 Current Saltwell Pumping Process Overview 2-1
  - 2.1.2 WRS Process Differences 2-4
- 2.2 WRS Description and Operating Approach 2-6
  - 2.2.1 Saltwell Pumping Components and Functions 2-8
  - 2.2.2 Water Distribution System Components and Functions 2-8
  - 2.2.3 Ancillary Components and Functions 2-8
  - 2.2.4 Waste Transfer System 2-9
  - 2.2.5 DST System 2-10
- 2.3 Leak Detection, Monitoring and Mitigation Strategy 2-10
  - 2.3.1 Leak Detection 2-11
  - 2.3.2 Leak Monitoring Design Concepts 2-19
  - 2.3.3 Leak Mitigation Design Concepts 2-19
- 2.4 Authorization Basis Assessment 2-20
- 2.5 Permitting 2-21

3.0 DEVELOPMENT AND EVALUATION 3-1
- 3.1 Retrieval Operations 3-1
  - 3.1.1 Intermittent Water Additions 3-1
  - 3.1.2 Continuous Water Addition 3-2
  - 3.1.3 Solution Recirculation 3-2
- 3.2 Water Distribution Configuration 3-3
  - 3.2.1 Single Sprinkler Option 3-3
  - 3.2.2 Dual Sprinkler Option 3-5
  - 3.2.3 Three Sprinkler Option 3-6
  - 3.2.4 Four Sprinkler Option 3-7
  - 3.2.5 Preferred Sprinkler Arrangement 3-8
- 3.3 WASTE CHARACTERIZATION INSTRUMENTATION 3-10
  - 3.3.1 Density and Solids Monitor 3-10
  - 3.3.2 Chemical Process Monitor 3-10
  - 3.3.3 Radionuclide Monitor 3-11

3.3.4 Topographical Mapping System 3-12
3.4 Equipment Placement Rationale 3-12
3.4.1 Saltwell Pump and Dip Tube Location 3-13
3.4.2 Ventilation Port 3-14
3.4.3 CCTV Camera 3-14
3.4.4 Ventilation Exhaust 3-14
3.4.5 Combustible Gas Monitor 3-14
3.4.6 Condensate Return 3-15
3.4.7 Temperature Probe 3-15
3.4.8 Dip Tubes 3-15
3.4.9 Level Gauge(s) 3-15
3.5 Tank Ventilation 3-16
3.6 Transfer Piping 3-16
3.6.1 S-Farm Transfer Piping System 3-16
3.6.2 SY-Farm and Inter-Farm Piping 3-19
4.0 ASSUMPTIONS AND UNCERTAINTIES 4-1
4.1 Assumptions 4-1
4.2 Uncertainties 4-2
4.2.1 241-SY Farm Staging Tank Space Availability 4-2
4.2.2 Effects of Water Distribution System on Existing Hardware ... 4-2
4.2.3 Use of existing Saltwell Pumping Equipment 4-3
4.2.4 Interim Stabilization Schedule Conflict 4-3
4.2.5 Project W-314 Schedule Conflict 4-3
4.2.6 Tank S-102 Initial Tank Retrieval Schedule Conflict 4-3
4.2.7 Use of Existing Transfer Lines 4-4
4.2.8 SY Farm Upgrades Schedule Conflict 4-4
4.2.9 Ventilation 4-4
4.2.10 Retrieval Transfer Rate 4-5
4.2.11 Dissolution Water Distribution 4-5
4.2.12 Preferential Dissolution 4-6
4.2.13 Retrieval Effectiveness 4-6
4.2.14 Power Availability 4-7
4.2.15 Estimating the 241-S-112 Liquid Inventory / Leak Detection .. 4-7
4.2.16 Tank S-112 Waste Volume and Condition 4-7
4.2.17 Safety Classification of Structures, Systems and Components 4-8
4.2.18 Regulatory Issues 4-8
4.2.19 Leak Detection Performance Criteria 4-8
4.2.20 Closure 4-8
5.0 COST & SCHEDULE 5-1
5.1 Work Breakdown Structure 5-1
5.2 Planning Basis and Assumptions 5-1
5.3 Cost Estimate 5-1
5.3.1 Cost Estimate Basis 5-1
5.3.2 Estimate Purpose 5-1
5.3.3 Estimate Organization 5-1
5.3.4 Escalation 5-2

5.3.5 Contingency 5-2
5.3.6 Rounding 5-2
5.4 Schedule 5-2
6.0 REFERENCES 6-1

LIST OF TABLES

Table 1-1 Long Lived Mobile Radionuclides 1-4
Table 1-2 Existing 241-S-112 Riser Utilization 1-4
Table 2-1 Equipment List for Dynamic Inventory Balance Leak Test 2-14
Table 2-2 Equipment List for Static Volumetric Precision Leak Test 2-16
TABLE 3-1 RISER UTILIZATION 3-13
Table 5-1 TPA Milestones 5-3

LIST OF FIGURES

Figure 1-1: 241-S-112 Riser Layout 1-5
Figure 1-2: SY Farm Piping 1-8
Figure 1-3: S Farm Piping 1-9
Figure 2-1: Simplified Saltwell Pumping Schematic 2-1
Figure 2-2: Dynamic Leak Detection Instrumentation 2-15
Figure 2-3: Static Leak Detection Instrumentation 2-17
Figure 3-1: Single Sprinkler Option 3-4
Figure 3-2: Dual Sprinkler Option 3-5
Figure 3-3: Three Sprinkler Option 3-6
Figure 3-4: Four Sprinkler Option 3-7
Figure 3-5: Preferred Sprinkler Option 3-9
Figure 3-6: Hose-in-Hose Cross Section 3-18
Figure 3-7: Hose-in-Hose Pit Entry Cross Section 3-19

LIST OF APPENDICES

Appendix A	Cost Estimate, Schedule, and Work Breakdown Structure
Appendix B	Construction Specification
Appendix C	Calculations
Appendix D	Master Equipment List
Appendix E	Compliance Matrix
Appendix F	deleted
Appendix G	deleted
Appendix H	Sketches
Appendix I	Ecology Interpretation of M-43 TPA Milestone

ACRONYM LIST/TERMS AND DEFINITIONS

AB	Authorization Basis
ALARA	As Low As Reasonably Achievable
BATEA	Best Available Technology Economically Available
BBI	Best Basis Inventory
CAM	Continuous Air Monitor
CCTV	Closed Circuit Television
cfm	cubic feet per minute
CGM	Combustible Gas Monitor
COC	Constituents of Concern
DCRT	Double Contained Receiver Tank
DOE	Department of Energy
DST	Double Shell Tank
F	Fahrenheit
FSAR	Final Safety Analysis Report
FY	Fiscal Year
gpm	gallons per minute
HTWOS	Hanford Tank Waste Operations Schedules
ILL	Interstitial Liquid Level
kVA	kilo-volt-amps
LDMM	Leak Detection, Monitoring, and Mitigation
LLCE	Long-Length Contaminated Equipment
LOW	Liquid Observation Well
LVDG	Low Volume Density Gradient
mgal	million-gallons
MPS	Master Pump Shutdown
OGT	Over-Ground Transfer Line
PIC	Pumping Instrumentation and Control
PLC	Programmable Logic Controller
PNNL	Pacific Northwest National Laboratory
psi	pounds per square inch
RPP	River Protection Project
RRC	Retrieval Release Criterion
SHMS	Standard Hydrogen Monitoring System
SMP	Sludge Measurement Port
SpG	Specific Gravity
SPL	System Performance Limits
SSC	Systems, Structures, and Components
SST	Single Shell Tank
TLDR	Target Leak Detection Rate
TMACS	Tank Monitoring and Control System
TPA	Tri-Party Agreement
WAC	Washington Administrative Code
WBS	Work Breakdown Structure
WFD	Waste Feed Delivery
WRS	Waste Retrieval System

1.0 INTRODUCTION

1.1 MISSION

The River Protection Program (RPP) mission, as defined in HNF-SD-WM-MAR-008, *Tank Waste Remediation System Mission Analysis Report*, includes the retrieval, immobilization, storage, and disposal of Hanford Site tank waste. In order to immobilize the waste for subsequent storage and eventual disposal, both single-shell tank (SST) and double-shell tank (DST) wastes must be retrieved for processing. Because of concerns related to the liquid integrity of the older SSTs, waste from the SSTs will be retrieved and staged temporarily in the newer and more reliable DSTs. The current baseline reference technology for the retrieval of SST waste is "past practice sluicing." This technique has been used successfully at the Hanford Site to retrieve SST waste, and it is considered one of the primary tools available to support the programmatic objective of retrieving SST waste. However, sluicing is an expensive process, utilizing large volumes of water and a production that relies solely upon this technology establishes a prohibitive cost baseline for achieving the SST Retrieval Program objectives.

The SST Retrieval Program has initiated activities to identify and demonstrate, under actual field conditions, alternative retrieval technologies exhibiting the potential to support the RPP Waste Feed Delivery (WFD) requirements while reducing the overall cost for tank cleanup and closure activities. One of these initiatives focuses on retrieval of SST saltcake wastes. Dissolution based retrieval involves the addition of a solvent (water) to the contents of a saltcake tank to dissolve the soluble salts. The resulting waste solution can then be readily pumped from the SST and transferred to the DST system. This approach has the potential to recover a significant portion of the current Hanford Site SST waste inventory and Constituents of Concern (COC). The long-lived mobile radionuclides present in the Hanford Site SSTs pose a significant risk to the environment and, in particular, the groundwater and Columbia River. Recovery of these COCs would reduce the risk of further contamination of the Hanford Site soil column and groundwater, at a fraction of the cost that would be incurred using the baseline reference technology (i.e., sluicing).

A number of different saltcake dissolution retrieval methods have been considered in support of production-level retrieval of Hanford's SSTs (RPP-6821). One of the process methods selected by the SST Retrieval Program for further evaluation is the Low Volume Density Gradient (LVDG) method. The LVDG process introduces water into a SST containing saltcake waste at a controlled rate using a "sprinkler" type device that distributes water over the surface of the saltcake, thus promoting dissolution of the soluble waste constituents (HNF-3554). The resulting solution can then be pumped from the SST to a more reliable DST. The SST Retrieval Program has identified the LVDG method as the "benchmark" saltcake retrieval technology in its out-year planning. The program planning includes deployment of a temporary system to conduct full-scale demonstration testing of in-tank dissolution and subsequent recovery of saltcake waste from one of Hanford's SSTs using the LVDG method. The results of this demonstration will provide valuable data to support the development of production-level saltcake

retrieval systems that can be deployed to recover waste from other SSTs. Tank selection activities conducted in FY 2000 have identified SST 241-S-112, located in the 200 West Area's S Tank Farm, as a suitable candidate for staging the saltcake dissolution retrieval demonstration.

1.2 PURPOSE

Renegotiation of the Tri-Party Agreement (TPA) M-45 series of milestones has slated 241-S-112 for a full-scale saltcake waste retrieval technology demonstration. Inclusion of 241-S-112 in the TPA milestones established the basis and need to proceed with the development of the 241-S-112 Retrieval Demonstration Project. The generation of this engineering report is intended to present a preliminary retrieval system design and operating concept and identify the activities and issues requiring resolution during latter design phases. The retrieval system development includes provisions to satisfy the following:

- RPP mission
- SST program mission
- WFD Functions and Requirements (F&Rs)
- Dissolution demonstration test objectives, and 241-S-112 F&Rs

Cost and schedule estimates are developed and included for the preliminary design concept to support the M-45 retrieval milestone activities and dates. These include additional development and validation activities required to reduce programmatic and technical uncertainty. Interfaces with other systems and projects have been identified and management methods proposed.

1.3 SCOPE

The Saltcake Retrieval Demonstration Project will provide temporary structures, systems and components (SSCs) as necessary to demonstrate dissolution retrieval of the saltcake waste from 241-S-112, and to transfer the dissolved waste to a receiver tank in the 241-SY Farm, in accordance with the applicable project requirements. The pre-conceptual planning presented in this report is based upon implementation of the LVDG dissolution retrieval methodology as discussed in Section 2.2 of this report. The main scope elements required to deploy and demonstrate the LVDG process include the following general systems:

- Tank S-112 Waste Retrieval System
- Water Distribution System
- S-Farm Waste Transfer System
- SY-Farm Waste Transfer System
- Inter-farm Transfer System

- DST Receiver Tank in the 241-SY Farm
- Instrumentation, Monitoring and Control System (including leak detection, monitoring, and mitigation)
- Other Utilities

The requirements basis and technical justification for the Saltcake Dissolution Retrieval Demonstration Project is provided in Tank S-112 Waste Retrieval Demonstration Level 2 Specification (RPP-7598). This document identifies the key system functions and associated technical requirements for the demonstration project. Furthermore, the preliminary retrieval system design shall function to satisfy the *Test Objectives for the Saltcake Dissolution Retrieval Demonstration* (RPP-7010) established by the SST retrieval program.

1.4 BACKGROUND

This section describes the initial (existing) conditions of 241-S-112, 241-SY Farm tanks, and the adjoining transfer lines. Numerous activities are either planned or ongoing in both the 241-S and 241-SY Tank Farms. As such, the precise configuration(s) is anticipated to change throughout the project lifecycle.

1.4.1 Existing 241-S-112 Configuration and Conditions

S Tank Farm was constructed between 1950 and 1951 and is located in the 200 West Area. Tank S-112 is the third tank in a cascade series of three tanks including 241-S-110 and 241-S-111.

Tank S-112 is constructed with a painted grout layer asphalt (waterproof) membrane and outer reinforced concrete shell to maintain the structural integrity of the steel liner by protecting it from soil loads. The reinforced concrete shell is cylindrical with a domed roof. The interior of the tank contains the steel liner that is constructed of mild steel. The steel liner extends up the tank wall to a height of approximately 25 feet providing a nominal operating capacity of 750,000 gallons.

Tank S-112 was removed from service in 1976 and declared inactive the same year. It is assumed sound and currently contains an estimated 523,000 total gallons of waste. An estimated 81,000 gallons of pumpable liquid remain (Best Basis Inventory [BBI]). The tank has been partially interim isolated, but awaits interim stabilization, scheduled for mid-FY 2002. Limited characterization data exists for this tank, with recent grab and core sampling completed in July 2001. Analytical sample results will be available in FY 2002. The long-lived mobile radionuclide constituents defined in the SST Retrieval Tank Sequencing Report (RPP-7087) are contained in Table 1-1. The breakdown by constituents are as reported in the BBI.

Table 1-1 Long Lived Mobile Radionuclides

Radionuclide	Curies
^{14}C	**6.68E+01**
^{79}Se	6.97E+00
^{99}Tc	4.76E+02
^{129}I	9.17E-01
^{238}U	1.08E+00*
TOTAL	5.52E+02

*8.12E-01 Curies of ^{238}U reported in RPP-7087

A single pit, 241-S-12A Pump Pit, located above the centerline of the tank provides a sub-surface, shielded, installation location for jumpers (temporary piping connections), pumps, and other equipment necessary to establish process piping/routing capabilities. The existing pit is constructed of reinforced concrete. The walls and floor are located below grade, and the pit is provided with a removable concrete cover located slightly above grade (663 feet above sea level).

Table 1-2, summarizes the current status of the risers in 241-S-112, and Figure 1-1 shows a plan view of the riser arrangement:

Table 1-2 Existing 241-S-112 Riser Utilization

Riser	Size	Utilization and Comments
1	4"	Connector Nozzle
2	4"	Blind Flange [BM CEO-36907, CEO-41066]
3	4"	Level Gage [ECN-620751]
4	4"	Temperature Probe
5	12"	Saltwell Screen and Pump (abandoned)
6	12"	B-222 Observation Port
7	12"	Blind Flange [ECN-706501]
8	12"	B-436 Liquid Observation Well
11	4"	SMP
13	42"	Saltwell Screen
14	4"	SHMS, Breather Filter [CEO-41066, ECN-W369-11]
16	4"	SMP [BM CEO-36907]
Condenser	12"	Not Used
MH	42"	Construction Man Holes

Figure 1-1: 241-S-112 Riser Layout

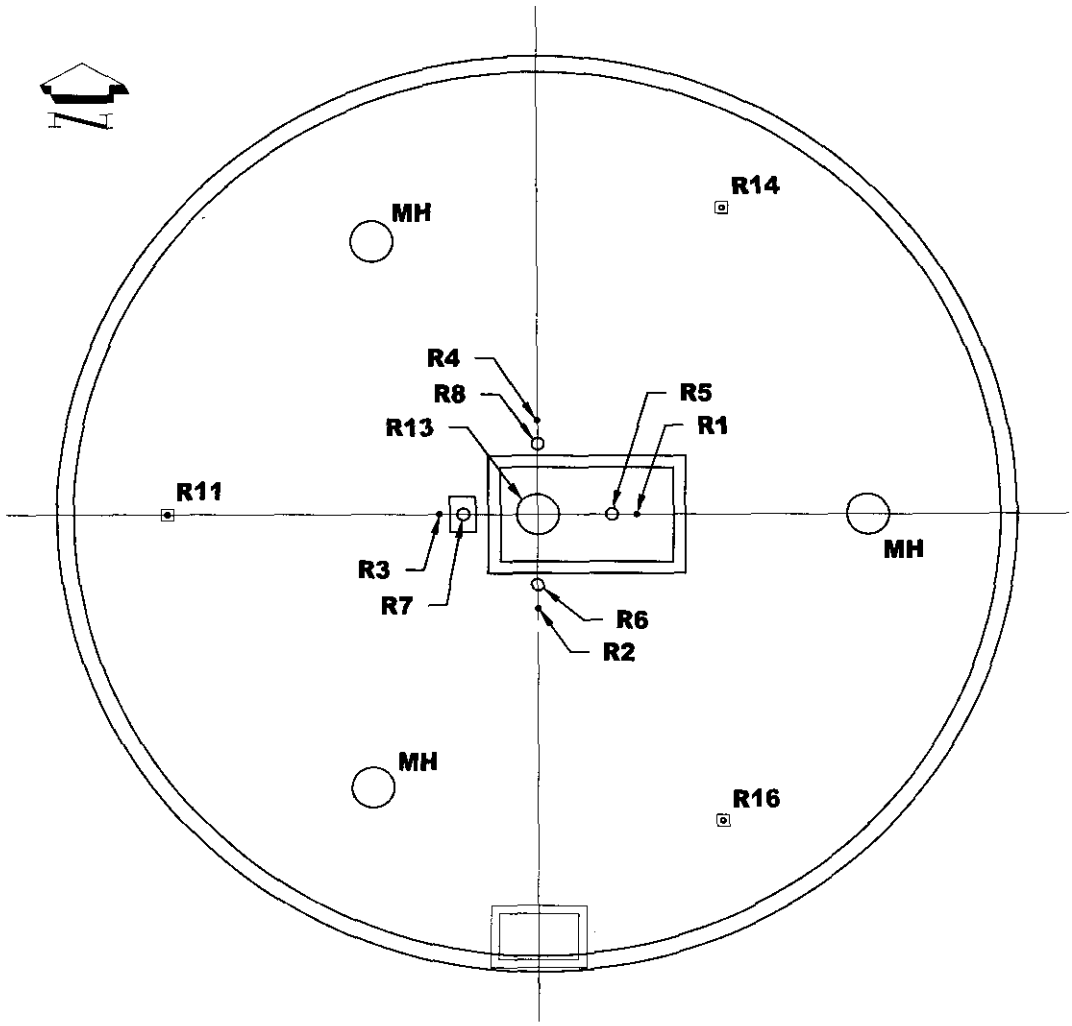

1.4.1.1 Pump Pit 241-S-12A

The 241-S-112 Waste Retrieval System (WRS) will interface with the existing S-12A Pump Pit shown in H-2-46197 (see also H-2-46418, Rev. 4, and H-2-73191, Rev. 5). Risers 1, 5, and 13 are in the 241-S-12A Pump Pit. Riser 5 has an old saltwell screen and pump, installed in July 1978, and Riser 13 contains the new saltwell screen, installed in October 2000. A new saltwell pump will be installed in Riser 13 near the time Interim Stabilization saltwell pumping is scheduled to begin (April 2002).

1.4.1.2 Electrical System

The power for 241-S Farm is primarily supplied from three 50 kilo-volt-amps (kVA) pole-mounted transformers (C68486P, C68487P, and C68488P). These three transformers supply power for several other loads, as well. Tank Farm Utilities has initiated a survey to determine the capacity factors for these transformers in accordance with the National Electric Code. It is anticipated that this survey will demonstrate adequate power is available for the options considered in this report. Calculation 4412-70-ECAL-001 in Appendix C also supports the conclusion that these transformers are adequate for project needs.

1.4.1.3 Water System

Upgrades to provide a 241-S and 241-SX Farm raw water source were completed by the Interim Stabilization project in FY 2000. A temporary 1-½-inch water line runs above grade from 241-SY Farm due South over 241-S-101, 104, 107, and 110 before continuing on to 241-SX Farm (ECN 660754). A capped tee is located over 241-S-110 due East of the 241-S-12A Pump Pit that is unused and available.

1.4.1.4 Ventilation System

Tank S-112 is passively ventilated by means of a breather filter installed at Riser R14. Riser 14 is also connected to a SHMS cabinet that has been placed in isolation.

1.4.2 Existing 241-SY Farm Tank Configuration and Conditions

There are three DSTs located in the 200 West Area's SY Tank Farm; one or more of these tanks will be used to stage waste from S-112 for later cross-site transfers of liquid wastes from the 200 West Area to the 200 East Area. The 241-SY Farm tanks have active ventilation systems.

These tanks were constructed with a carbon steel primary liner (heat-treated and stress-relieved), a carbon steel secondary liner (not heat-treated), and a reinforced concrete shell. The tanks have flat bottoms. An insulating concrete layer separates the bottoms of the primary and secondary liners. There is a grid of drain slots in both the insulating concrete layer and the concrete foundation beneath the secondary liner.

The 241-SY Farm tanks have about 25 risers, ranging in diameter from 4 inches to 42 inches that penetrate the dome of the primary tank and over 30 risers providing access to the annulus between the primary and secondary liners. See drawing H-14-010531, Rev.5, Sheet 2, using tank 241-SY-102 as an example.

Upgrades and modification to the DST system are not considered within the scope of the dissolution demonstration, or the preliminary engineering, beyond the definition of interfaces. This PER assumes that an operable waste transfer system will be in place to accommodate the retrieval demonstration.

1.4.3 Existing Waste Transfer Piping System

The existing piping route between 241-S-112 and 241-SY Farm is not functionally contiguous. There is an existing 2-inch encased line between the 241-SY-02A pump pit and the 241-SY-A Valve Pit (SL-177), and an existing 3-inch encased line between the 241-SY-A Valve Pit and the 241-S-A Valve Pit (SN-275) as shown in Figure 1-2. Waste had been transferred by the Interim Stabilization project between the 241-S-B and 241-S-D Valve Pits using an above grade one-inch hose-in-pipe shielded with concrete shield blocks. This route was recently abandoned due to design life concerns and integration with newly implemented hose-in-hose transfer lines. A new temporary, 2-inch hose-in-hose was installed connecting the 241-S-A and 241-S-C (see Figure 1-3) Valve Pits. The Interim Stabilization project has established the precedence of no longer utilizing any of the original existing buried carbon steel piping in either 241-S or 241-SX Farm due to the degraded condition of transfer lines. The discovery of the SN-219 failure during routine surveillances on January 6, 2000, and the observance of a small surface pool led to the decision to utilize hose-in-hose over-ground transfer lines (OGT) for the remaining saltwell waste transfers in the 241-S and 241-SX Farms A transfer line failure document was generated on the failure of transfer line SN-219 from 241-S-103 to the 241-S-A Valve Pit (RPP-5825), this document provides additional information with regards to the abandonment of direct buried transfer lines within 241-S and 241-SX Farms for Interim Stabilization waste transfers.

The Interim Stabilization Project will utilize over-ground transfer lines exclusively for the remaining S and SX Farm tanks to be saltwell pumped. In the case of 241-S-112, the current design plan is to install a 2-inch in 4-inch hose from the 241-S-12A Pump Pit to the 241-S-C Valve Pit. A flexible jumper will connect the 241-S-112 hose termination to a routing manifold (H-14-104117) to direct flow into the existing 241-S-C to 241-S-A OGT. On the other end, a flex jumper in the 241-S-A Valve Pit connects the 241-S-A to 241-S-C OGT to a manifold (H-14-104150) and another separate flex connects the manifold to the existing encased SN-275 transfer line via nozzle L-20 (see Figure 1-3).

1.4.4 Master Pump Shutdown System

The existing Master Pump Shutdown (MPS) system located in the 241-SY Farm will interface with the 241-S-112 WRS. This interface will consist of a data link or hardwire interlocks between the Programmable Logic Controller (PLC) and the existing MPS inputs located in the 241-SY Farm. The data exchanged between these systems will consist of those signals necessary to monitor and shut down the WRS operations in the event of a detected off-normal event.

1.4.5 Monitoring and Control System

A Pumping Instrumentation and Control (PIC) skid located on 241-S-112 will monitor the waste dissolution retrieval operations. Signals for pressure, flow, specific gravity, and temperature will be routed to the instrument enclosure located on the PIC skid. The PIC skid PLC will monitor the process variables and provide a local readout for operations personnel. These inputs will be used by an additional PLC, as well, to

Figure 1-2: SY Farm Piping

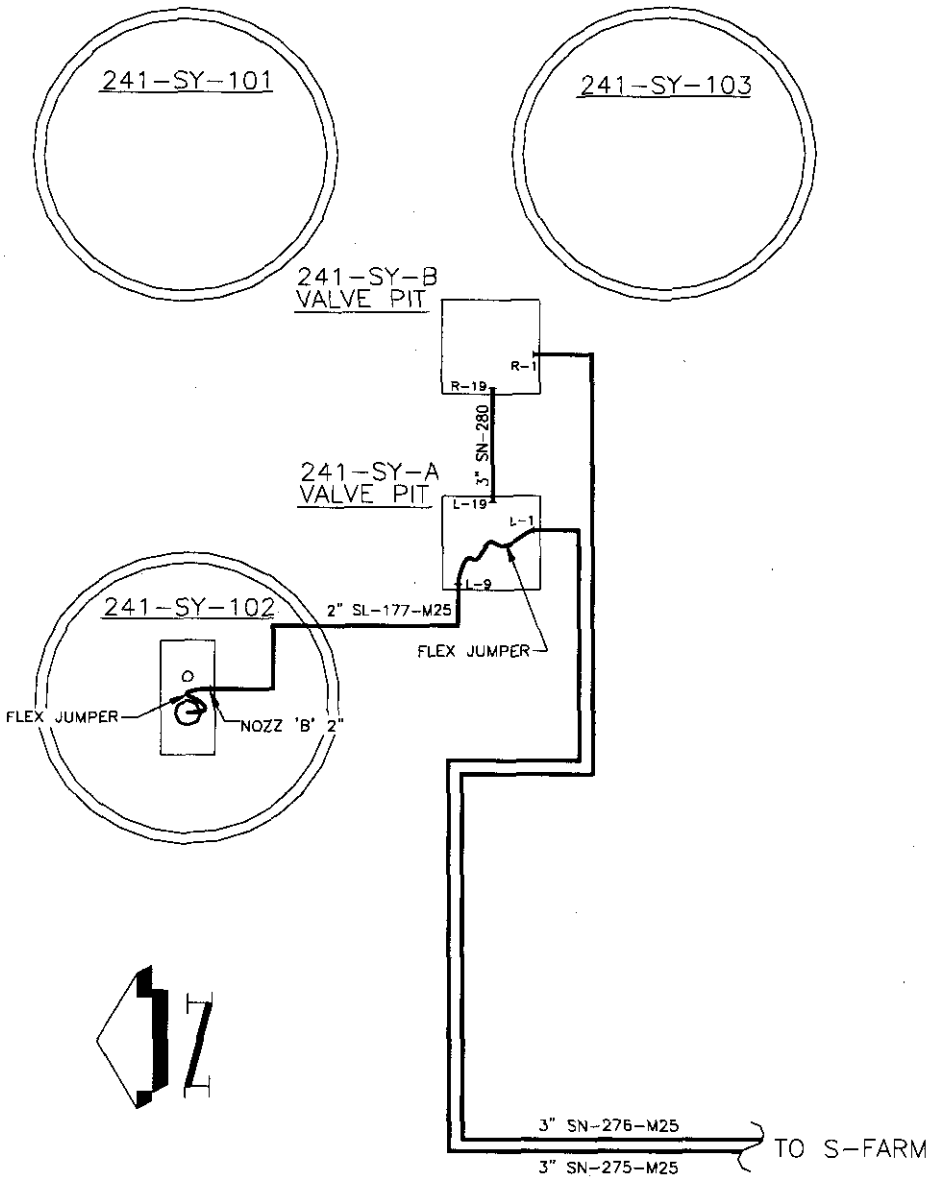

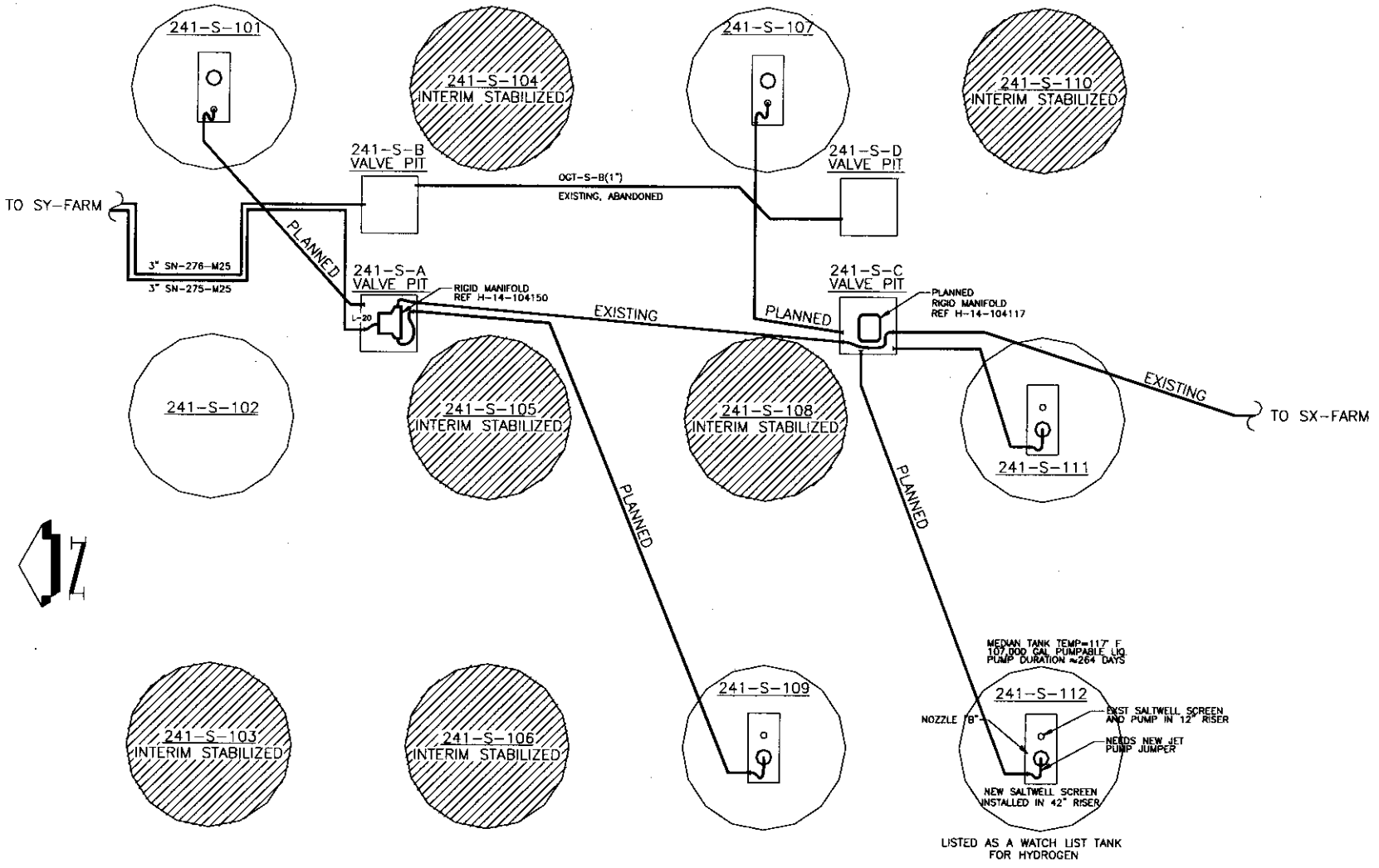

Figure 1-3: S Farm Piping

perform the volumetric inventory balancing calculations and determination of the presence of a leak.

The closed circuit television (CCTV) camera located in 241-S-112 will be monitored and controlled remotely from the 242-S Evaporator Facility.

1.5 PROJECT INTERFACES

There are five projects conducting activities in 241-S and/or 241-SY Farm, which may be in the vicinity of the saltcake dissolution retrieval demonstration. Depending upon the execution schedules for these activities there are likely to be interferences. These projects include:

- Project W-521, Waste Feed Delivery Systems, is scheduled to be performing construction activities in the 241-SY Farm near the start of 241-S-112 retrieval operations. Jumpers and manifolds are planned for installation in the 241-SY-02A Pump Pit and the 241-SY-A Valve Pit.
- Project W-211, Initial Waste Retrieval Systems, is scheduled to be upgrading 241-SY-102 to install mixer pumps and a new transfer pump. These activities are planned well after the demonstration completion, however a change in the W-211 project schedule could result in concurrent activities in 241-SY Farm.
- Project W-314, Tank Farm Restorations and Safe Operations, will be performing construction activities to bypass the 244-S Double Contained Receiver Vessel (DCRT) in FY 2002.
- Project W-314 will be upgrading the 241-SY-A Valve Pit in FY 2004 to add a pit liner.
- Project W-525, DST Resource conservation and Recovery Act Compliance Upgrades, will be upgrading select transfer lines terminating in the 241-SY-A Valve Pit and the 241-SY-02A Pump Pit. The upgrades will extend the encasements into the pit to provide for the required continuous encasement.
- Interim Stabilization is scheduled to be pumping from numerous 241-S and 241-SX Farm tanks concurrent to the 241-S-112 retrieval demonstration construction and operation activities.
- The potential conflicts and resulting project impacts from these projects are discussed further in Section 4.2, Uncertainties.

This page intentionally left blank.

2.0 PROCESS & OPERATIONAL DESCRIPTION

This section provides an overview of the WRS planned to support the Saltcake Dissolution Retrieval Demonstration. This approach utilizes existing equipment and procedures developed and utilized by the Interim Stabilization Project for saltwell pumping operations to the greatest extent practical. Additional SSCs and processes will be integrated with the saltwell pumping system for retrieval of saltcake waste. A description of the current saltwell pumping process is included in Section 2.1.1. The WRS description with associated sub-systems is provided in Section 2.2. An overview of the recommended leak detection, monitoring, and mitigation (LDMM) strategy used with the WRS method is provided in Section 2.3.

2.1 PROCESS OVERVIEW

2.1.1 Current Saltwell Pumping Process Overview

The 241-S-112 dissolution retrieval process will utilize existing saltwell pumping SSCs and procedures to the extent practical. Figure 2-1 represents a simplified schematic of the saltwell pumping process. Pressure, temperature, dip tubes (SpG) and flow elements, which monitor and control the process, are not shown for clarity.

Figure 2-1: Simplified Saltwell Pumping Schematic

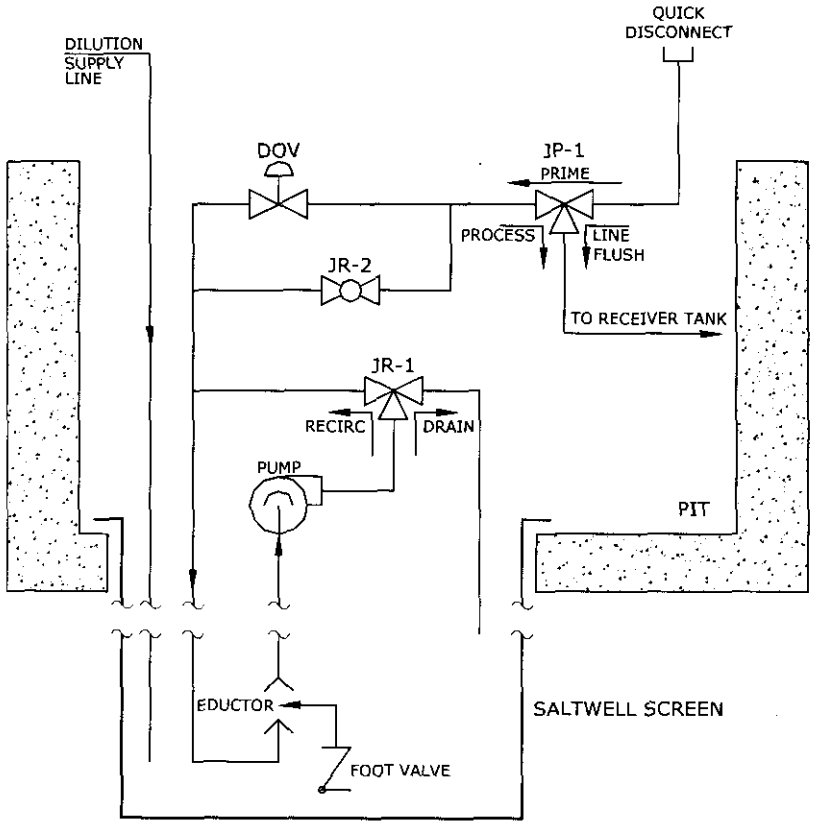

The four primary operational modes for saltwell pumping are: system flush, prime, pump startup (process), and line flush.

2.1.1.1 System Flush

Interim Stabilization has observed increased success in starting the pump when a system flush is performed prior to pumping initiation. The saltwell pump is flushed by introducing water to the pump legs and allowing it to drain out the foot valve.

The following steps are executed to perform a system flush:

- The water source is connected to the quick disconnect.
- Valve JP-1 is placed in the "PRIME" position.
- Valve JR-2 is opened.
- Valve JR-1 is placed in the "RECIRC" position.
- The foot valve is manually opened.

This configuration is maintained until the desired water volume has flushed through the system. After the flush, the foot valve is allowed to close. The water addition volume is measured by a flow meter on the water truck. After the system has been flushed, the pump is primed.

2.1.1.2 Prime

The water tank on the PIC skid can be used to prime the pump, temporary water supply line, or a water truck connected to the system flush quick disconnect can provide the water supply. The water tank on the PIC skid cannot support the volume required to perform a typical system flush, which is performed immediately prior to pump priming. Since the water truck, or water supply line used to perform the system flush, is still coupled to the system flush quick disconnect, the system can be primed by either source. The following steps are executed to perform a system prime:

- The water source is connected to the quick disconnect.
- Valve JP-1 is placed in the "PRIME" position.
- Valve JR-2 is opened.
- Valve JR-1 is placed in the "DRAIN" position to bleed air out of the loop.
- A nominal volume, sufficient to fill the pump legs, is introduced.
- Valve JR-1 is placed in the "RECIRC" position.
- Valve JR-2 is closed.
- Valve JP-1 is placed in the "PROCESS" position.

The water addition volume is measured by a flow meter. After the system is primed, the pump is ready to be started.

2.1.1.3 Pump Start-up

With the system already primed, all of the valves are lined up as required to start the pump. Following startup of the saltwell system the pumping system may be operated in two different modes, "MANUAL" or "AUTOMATIC." The preferred method is to run the pump in the automatic mode. Information on waste specific gravity and depth are used to maintain the desired liquid waste column height in the screen. This is accomplished by modulating the diaphragm operated valve further open or shut to compensate for variability in interstitial liquid flow through the saltwell screen. Automatic operation is typically performed after the saltwell screen has been initially pumped dry a couple times at higher transfer flow rates. After readily available supernatant or interstitial liquid is removed the remaining inflow to the saltwell screen is limited by the mobility of the liquid through the saltcake matrix and into the screen. Automatic operation is used to minimize the volume of liquid within the screen and maximize the height differential between pumping system inlet and the level of the interstitial liquid.

The manual mode of operation bypasses the more restrictive diaphragm operated valve and routes waste directly through a ball valve (JR-2). Manual operation is used to obtain higher transfer flow rates when the saltwell screen is readily filling with pumpable liquid.

Two saltwell pump systems are currently in use by the Interim Stabilization project. Most of the systems use a 1½-horsepower Chempump™ and a Goulds® eductor. The stock of Goulds® eductors has been depleted and cannot be replenished, as this eductor has not been made in over two decades. This configuration produces typical maximum flow rates from four (4) to six (6) gpm depending upon available head. The other pump system uses a 4-horsepower Sundyne™ pump and a Myers® eductor. This configuration produces typical maximum flow rates from eight (8) to ten (10) gpm depending upon the available head from tank inventory. The Sundyne™ pumping configuration has only been used recently and there has not been sufficient use to establish a reliability history. It is anticipated however, that this configuration will improve upon the nominal operating availability of the Chempump™ and Goulds® pumping system by resolving previous pumping failure mechanisms (RPP-6883).

Leak detection in the tank is performed entirely by mass-balance calculations by the Interim Stabilization project. A flow meter on the saltwell pumping system measures outgoing waste flow. The water into the tank is also measured by flow meters either on the PIC skid, dilution skid, or water truck. The DST waste volume received is determined by measuring liquid level in the receiving tank.

2.1.1.4 Line Flushing

To prevent transfer line plugging, line flushes are typically performed weekly, or whenever the system is secured. A normal line flush consists of running one and a half to two line volumes through the transfer route. Flushes are directed from the recovery SST to the receiving DST. The water is typically heated to a maximum of 160° F and

pressurized up to 120 psi. The increased temperature, pressure, and flow rates are intended to dissolve and motivate any trapped solids out of the transfer line.

The following steps are executed to perform a line flush:

- The saltwell system pump is turned off.
- Valve JR-2 is closed, Valve JP-1 in positioned to "PRIME", Valve JR-1 is positioned to "DRAIN."
- With Valve JP-1 in the "PRIME" position, the hot water source is connected to the quick disconnect.
- Valve JP-1 is placed in the "LINE FLUSH" position.
- One and a half to two transfer line volumes are pumped through the lines.
- Valve JP-1 is returned to the "PRIME" position.
- Water source is disconnected.

Transfer line plugging has resulted numerous times throughout SST stabilization history. Most of the obstructions were the result of waste crystallization and solids deposition in system low points. The low waste transfer velocity and insufficient heat trace have been found as the primary contributors to transfer line plugging. Generally, transfer line obstructions occur in portions of the transfer route that are un-insulated, un-heat traced, at a corner such as a PUREX head, or low points such as in a flex jumper. Transfer line obstructions can normally be removed with bi-directional system flushing. The water addition volume introduced during transfer line unplugging is measured by a flow meter and accounted for on the material balance data sheets.

2.1.2 WRS Process Differences

The 241-S-112 WRS will be deployed in a fashion to utilize the existing saltwell pumping design and equipment to the greatest extent possible. This will reduce the time, cost, and validation required to deploy and operate the system. However, to accommodate the addition of solvent to the tank and additional LDMM requirements (RPP-7825) some new systems and modification to the current saltwell systems will be required. These differences are described below.

2.1.2.1 Pumping Instrumentation and Control (PIC) Skid

The current design of the PIC skid will require minor modifications to the existing PLC, which include additional inputs such as leak detection and other farm specific required inputs for safe shutdown (i.e., low transfer pressure, high temperature, flammable gas). An additional PLC, or inputs to the existing PLC, will also be required on the PIC skid to control and monitor the water addition, chemical injection (if required), and perform volumetric balancing calculations for leak determination.

2.1.2.2 Dilution Skid

The current dilution skid in 241-S Farm, which is tied to the temporary raw water supply, will be utilized without modification.

2.1.2.3 Pump and Jumper

The current saltwell pump and jumper designs will be utilized in the 241-S-12A Pump Pit without modification. The Sundyne™ pump and a Myers® eductor have been selected for deployment, due to the higher pumping capacity and resulting reduction in the retrieval operations duration as the result of increased system reliability and operability. This increase in system reliability is attributed to Sundyne pump and saltwell system design to correct failure mechanisms discovered with the previously used pump. The Sundyne saltwell pumping system requires additional support equipment to adequately satisfy the pump operation and application. Additional support equipment includes an Injection Skid, used to provide bearing supply and cooling water, Filter Skid to filter bearing supply water to 20 microns and a backflow preventer assembly and mounting box to prevent process fluid from being routed above grade.

2.1.2.4 Water Distribution System

A water addition system utilizing in-tank water distribution devices will be the primary difference to the saltwell pumping system. The water distribution assemblies installed in the tank will be connected directly to the temporary (an backflow prevented) raw water supply line.

The water distribution assemblies will each have an independent throttle valve downstream of two master shutoff valves. One of the master valves will be manually operated to provide a water source and either a manual bypass valve or an automatic valve will be used to control water entry into the tank. Either a motor or air operated or solenoid fail-shut valve connected to the PLC on the PIC skid can be utilized as the automatic water introduction valve. The manual bypass valve will be opened to supply water to the waste surface in the event water addition is required prior to pumping system startup. This bypass valve would require a level of administrative control to prevent inadvertent operation. Once the waste is sufficiently saturated, the saltwell pump will be primed and started. This will open the automatic valve, and an operator will shut the manual valve. In the event the saltwell pump is shut down for any reason, the automatic valve will shut, stopping the water addition to the tank. The sprinkler system will also have flow measurement equipment to monitor the influx volume into the tank. Indication will be provided to allow the operator to suspend the water supply to the sprinkler mechanisms in the event that the rate of accumulation of solvent in the tank exceeds the extraction rate.

The water distribution devices will be designed to promote global and/or localized dissolution of saltcake material as the dissolution process develops.

2.1.2.5 Chemical Injection Skid and Sampling Station

A chemical injection skid installed upstream of the water addition system will be used to buffer the solvent, if required. This is to accommodate for the depletion of corrosion inhibitors in the tank throughout the recovery process, or to aid in the dissolution of varying salts. A sample station will allow for monitoring of the removed solutions chemistry, if required. The collected sample data will be used to adjust the introduction of buffers or corrosion inhibitors to the water introduction system via the Chemical Injection Skid. This data will also be used to analyze the system performance for future retrieval consideration.

2.1.2.6 Ventilation

It has been assumed that passive ventilation will be adequate for the retrieval demonstration. The generation of aerosols by the water distribution system and possible gas releases during the retrieval will be evaluated in subsequent project phases. If warranted by these evaluations, an active portable ventilation system will be incorporated into the project design and cost estimates.

2.2 WRS DESCRIPTION AND OPERATING APPROACH

The 241-S-112 WRS method consists of two separate primary systems, a water distribution system and a solution removal system. Water will be introduced to the tank through three water distribution mechanisms; one each installed in Risers 11, 14, and 16.

The Interim Stabilization Project will install a saltwell pump and jumper, leak detector, and over ground piping transition in the 241-S-12A Pump Pit.

Three water distribution assemblies installed in Risers 11, 14, and 16 will be operated independently or simultaneously at an average combined flow rate equal to the maximum solution removal rate of the saltwell pump. Once equilibrium is reached, the rate of solvent introduction (8 to 10 gpm) will approximately equal the rate of solution removal (8 to 10 gpm). The designed water introduction rate is based on the highest anticipated retrieval rate of the new saltwell pump assembly design, which utilizes a Sundyne™ pump and Myers® eductor (See Section 2.1.1 and 3.1). New dip-tubes installed in the existing saltwell screen (Riser 13) will monitor the dissolution process by measuring the specific gravity (SpG) of the solution in the well. The dip-tubes will also be used to measure the accumulation depth of solution in the screen.

The water added to the tank through the dissolution distribution system may be heated to prevent cooling of the waste by the solvent. Cooling of the waste may slow the dissolution process and increase volume of secondary waste produced by the retrieval. With DST space at a premium it is desirable to minimize the waste generation and need (and expenditure) for evaporator runs at the end of retrieval. Heated solvent (above the temperature of the waste) may also increase the solution saturation and waste recovery efficiency. Depending upon the design of the water introduction system there may be a propensity for aerosol generation with water heated above the waste temperature. The removed solution should be maintained at the temperature it is removed, or increased, in

transit to the DST to prevent salt form coming out of solution. The issue of solvent introduction parameters (temperature, pH) will require further examination and consideration during the conceptual engineering phase of the project. At this time, the preliminary engineering development and associated cost estimate assumes that the water supply may require heating.

Conventional, continuous saltwell pumping will maintain a minimum volumetric inventory in the well. The liquid inventory will be minimized at all times during the retrieval by maintaining the lowest liquid level possible. A liquid level will be required to be maintained above the outlet of the two lower dip tubes to monitor the dissolution process (tank volume level and specific gravity). Once the waste becomes saturated, the rate of solvent addition will be balanced to approximately equal the rate of solution removal. As the water permeates through the waste it will dissolve and/or erode the saltcake and flow into the saltwell. Buffers or corrosion inhibitors may be fed into the water distribution stream as required during operations to ensure the recovered solution is within the transfer specification. Waste grab samples from the saltwell screen will be analyzed periodically to provide data for buffer or corrosion inhibitor feed adjustments. Transfer line flushing will occur as needed and at the end of each operating period.

It is anticipated that the WRS will operate at 24 hours a day and 7 days a week only interrupted for line flushing, static leak testing and equipment failures. Static leak testing in 241-S-112 will be performed weekly subsequent to line flushing. Dynamic leak detection will be performed continuously during retrieval operations using flow meters, interstitial liquid measurement, and level gage(s). The operations will continue in this manner until all saltcake waste has been retrieved from 241-S-112, or retrieval efficiency degrades to the point of cost prohibition (a.k.a. limits of technology).

Interruptions in operations may occur to perform cross-site waste transfers from the recipient vessel in the SY Farmto the East area DST. These interruptions are in addition to the weekly suspension of operations to perform line flushes and static leak tests. Each transfer shutdown period is approximated to require 30 days to complete all activities. It has been assumed that the staging tank will initially be emptied to the greatest extent feasible, and not require a pre-retrieval waste transfer. It is estimated that 1.8 Mgal of dissolved waste will be transferred through the receiving tank in order to complete the S-112 demonstration, as described in Appendix C. The retrieval efficiency for this waste stream is expected to be improved as compared to nominal operating efficiencies of previous saltwell pumping operations by using the Sundyne pumping system and an aggressive operation strategy that quickly returns the system to service following unplanned shutdowns. In this configuration, assuming a 10 gpm pumping rate with 70 percent efficency, the retrieval campaign is anticipated to take approximately 6 months . The current estimated retrieval duration may be reduced if alternative pumping technologies and retrieval methods are identified and evaluated.

The existing design of the saltwell pumping system is to exclude particles greater than 1/20 of an inch, maximum size of opening in saltwell screen material, removal of solids with a size larger than this dimension can not be performed by the saltwell system. The

saltwell pumping system was designed to remove supernatant and interstitial liquid that enters the saltwell screen, an ideal application for the LVDG retrieval demonstration. As the result of the saltwell pumping systems inability to transport solids a secondary pumping system or technology may be deployed in conjunction with the saltwell pumping system to achieve necessary waste volume removal and potentially improve upon the projected duration of the retrieval campaign by accelerating the retrieval transfer rate.

A fully saturated sodium solution is assumed as being 10 molar. Dip tubes installed in the saltwell will measure specific gravity, which in turn will be used to estimate the solution saturation. The recovered solution dilution ratio will be based on that typically used by Interim Stabilization for saltwell pumping. Saturated solutions are diluted one to one with water. Recovered solutions with a saturation of 5 molar or less will not be diluted for transfer to the DST system. Dilution will increase from zero up to a maximum of one to one (1:1) for saturations ranging from 5 to 10 molar, respectively. Dissolution is targeted to generate at least a 5 molar sodium solution to keep the DST waste volume within the range described.

2.2.1 Saltwell Pumping Components and Functions

Liquid waste will be removed from 241-S-112 via a saltwell eductor pump and a piping system connected to receiver 241-SY Farm staging tank. The preliminary design concept for the waste removal portion of the system is functionally identical to existing Interim Stabilization waste retrieval systems. The WRS therefore offers the same degree of reliability and maintainability as the current Interim Stabilization system.

2.2.2 Water Distribution System Components and Functions

Water will be added to 241-S-112 utilizing the temporary water supply installed by the Interim Stabilization Project (see Section 1.4.1). Above ground piping and pipe supports will be required to extend the service the approximate 200 feet from 241-S-110 to the solvent distribution system at 241-S-112. Intermediate pipe supports, heat trace and other requirements listed in ECN 660754 will apply to this extension. Self-regulating heat tracing will minimize maintenance needs and a flow control loop will be installed to measure and control water addition. Pre-installation maintenance of the existing infrastructure used by the Project (i.e., replace valve packing, equipment calibration) should minimize field maintenance over the relatively short utilization time (i.e., approximately 9 months). While none of this equipment is required for saltwell pumping, it is relatively simple to maintain and therefore represents only a moderate incremental maintenance burden compared to current Interim Stabilization activities.

The water added through the dissolution distribution system may be heated to help maintain ambient tank temperature, as dissolution is expected to be endothermic; also, warmer water should accelerate dissolution.

2.2.3 Ancillary Components and Functions

The data acquisition system for the WRS will consist of: dip tubes to monitor tank waste level and SpG; flow measuring equipment, interstitial liquid measurement equipment;

and a CCTV camera for observation of in-tank events. Psychrometric monitoring equipment to measure ambient conditions, exhauster flow rates, outlet conditions, and other parameters may be required if the uncompensated performance of the LDMM systems is not sufficient. Uncompensated performance means that the readings have not been corrected for error factors. Error factors may hide a leak or may lead to the incorrect determination that the tank contents have leaked. With the exception of the CCTV, psychrometric monitoring equipment and other possible LDMM equipment, and modifications described in Section 2.1.2, all of the data acquisition equipment is currently used for Interim Stabilization.

The retrieval system will be monitored and controlled from a PIC skid located near the 241-S-12A Pump Pit. This skid is essentially the same skid used for saltwell pumping activities with minor modifications as discussed in Section 2.1.2. The skid includes a PLC, an air compressor (that connects to the weight factor instrumentation in the tank), an 80-gallon water tank (for instrument purge and priming the pump), and controls for the pump. In addition to monitoring and controlling the retrieval process, the PIC skid also will send signals to the 242-S Evaporator Facility so that the process can be monitored remotely from outside the 241-S Tank Farm.

Tank corrosion inhibitors will be added from a chemical injection skid upstream of the three sprinkler lines and downstream of the connection to the central Pump Pit, if required. Chemical injections will be made in accordance with a Process Control Strategy for 241-S-112 Retrieval to be developed during the conceptual design phase of the project. Determination of batch-feed adjustments will be performed after analyzing data from computer modeling and/or grab sampling. A valve will be installed to isolate the chemical injection supply from the Water Distribution System.

Because the corrosion inhibitors will deplete at varying rates over the extent of the retrieval campaign, adjustments to the chemical injection rate will be required periodically. A sample station will be located in the 241-S-12A Pump Pit, if required. Samples taken at the station will be used to determine the pH and salt concentration of the waste stream leaving 241-S-112. This information can then be used to adjust the rate corrosion inhibitors are added to the tank by the Chemical Injection System.

2.2.4 Waste Transfer System

The waste transfer lines will consist of existing temporary hose-in-hose transfer lines as well as existing encased pipe with flexible jumpers in the Valve Pits. Leak detectors located in the 241-S-C and 241-S-A Valve Pits and 241-S-12A Pump Pit will be monitored at the PIC skid. The 241-SY-A and 241-SY-02A Pits will be monitored from the 242-S Evaporator Facility and Instrument Building 241-SY-271. The 242-S Evaporator, the 241-SY-271 Instrument Building and the tank monitor and control system (TMACS) will connect to the PIC skid so that the WRS will shutdown upon detection of a leak in either farm.

2.2.5 DST System

Waste from the S-112 Saltcake Waste Retrieval Technology Demonstration Project will be sent to the DST storage system. The initial staging location for this waste is the 241-SY-Farm, which has an active ventilation system, leak detection system, and continuous air monitor (CAM) alarm system. In addition to these systems, dome pressure, waste and dome temperature, combustible gas concentration, and liquid level will be monitored for WRS operations at 241-S-112. Off normal conditions of these signals will initiate a shutdown of the retrieval operation, including pumping system and water addition system. The PIC skid PLC will be provided with a data link for transfer of operational data from the 241-SY Farm interfaces as shown on Drawing 4412-0470-IDWG-101 (Appendix H).

One or more cross-site transfers may be required to support the retrieval from 241-S-112. Approximately 1.8 Mgal of solution will be produced over the campaign. The infrastructure will have to be in place to support the transfer and receipt of this waste into the East area DST System. This will require integration and coordination between the demonstration retrieval project and the DST System and Projects.

2.3 LEAK DETECTION, MONITORING AND MITIGATION STRATEGY

The LDMM Strategy for the 241-S-112 Saltcake Waste Retrieval Demonstration is under development parallel to the preliminary engineering effort. The 241-S-112 Functions and Requirements (a.k.a. S-112 TPA F&R) document is required for submittal to the Washington State Department of Ecology (Ecology) by December 30, 2001 in accordance with TPA milestone M-45-03-T03. The S-112 TPA F&R, once approved by the stakeholders, will establish the strategy for LDMM and operations.

One of the Tank S-112 retrieval demonstration goals is to establish performance characteristics and limits of an integrated retrieval and LDMM system designed to minimize leakage during retrieval, if it occurs, and to detect leakage within a risk-based performance envelope. An integrated LDMM and retrieval strategy will therefore be employed to manage the risk posed by potential waste leakage during Tank S-112 retrieval using the best available leak detection, leak monitoring, and leak mitigation technologies economically achievable. The preliminary strategy developed for the retrieval and LDMM demonstration is based on a risk-based retrieval release protection strategy and the Retrieval Performance Evaluation (RPE) process, as well as technology and programmatic considerations. The RPE methodology is used to assess the long-term risk from tank residuals (i.e., past leaks, leak losses, and residual tank waste) following retrieval to establish system performance requirements that are protective of human health and the environment. When integrated with the retrieval technology, the risk-based approach establishes the minimum leak detection limit as a function of potential retrieval leak loss volume and residual waste remaining in the tank following completion of retrieval activities. The minimum acceptable leak detection limit is used to develop the target leak detection rate for the LDMM system, direct the LDMM methods selection and operations strategies, and develop release response actions for use during retrieval

operations. This retrieval release protection strategy allows for a tank-specific LDMM strategy to be developed for each SST based on its process history and posed risk.

Upon completion of the Tank S-112 retrieval activities, this demonstration is expected to provide a basis (along with other SST retrieval projects and demonstration lessons learned) for deploying retrieval and LDMM technologies in the remaining SSTs.

The primary method for LDMM proposed for the Tank S-112 Retrieval Demonstration utilizes both tank internal and external systems. The internal tank system includes provisions for both static and dynamic volumetric inventory balancing by conventional methods. External leak detection will be performed by routine surveillance using the existing drywell casings and a radiation monitor. In the event a leak occurs and goes undetected by the primary internal method, the secondary external method should detect the leak, by measuring the increased radioactivity in the soil column. External leak detection systems, other than drywell monitoring, are unproven in the scale and application required for this retrieval. Further evaluation and testing of alternative external systems is required prior to implementation (besides the baseline method of drywell monitoring) (RPP-8476).

The preliminary LDMM system for the 241-S-112 saltcake dissolution retrieval demonstration consist of a combination of the following:

- Leak detection: In-tank volumetric system and external method
- Leak monitoring: In-tank volumetric system and external method
- Leak mitigation: Minimization of tank liquid inventory and retrieval campaign duration

2.3.1 Leak Detection

Detecting a leak from a waste tank requires application of suitable technologies, methods, and systems. Work documented over much of the past decade shows that there are many possible methods to detect leaks in underground storage tanks. However, there are a limited number of methods that can be readily implemented. In 1998, a review of previous LDMM investigations and new information regarding technologies applicable to SST retrieval was performed which recommended the use of in-tank volumetric methods. In-tank volumetric methods recommended were similar to the EPA approved methods used on underground petroleum tanks. In 1999, an update of the SST retrieval LDMM strategy repeated these recommendations based on tanks with a free liquid surface.

A review of recent waste retrieval projects indicates that internal monitoring of liquid inventories is the most commonly used technology applicable to the retrieval of S-112 (RPP-7825). The only currently available leak detection technologies with proven performance histories in application at Hanford tanks (or similar applications) are volume inventory balancing techniques (internal) and drywell radiation monitoring (external). The approved EPA methods for leak detection, where a free liquid surface exists, are "dynamic" and "static". Dynamic leak detection is monitoring of liquid and waste inventories while waste is actively being retrieved. Static leak detection is performed

when operations are temporarily suspended. These techniques are further discussed below.

2.3.1.1 In Tank Leak Detection

Volumetric inventory balance techniques require that a system be established such that all of the inputs and outputs are known. For 241-S-112 this will require volumetric measurement of the inflow, outflow, and change in inventory. Primarily, only liquids will flow into or out of the tank. The volume in the tank however, consists of solids, liquids, and even a gaseous void fraction. Estimates of the volume of solids and gases present in the tank at any given time will have a high degree of uncertainty. The liquid volume in the tank however, can be measured and estimated with a relatively high degree of confidence. The liquid will flow to form a level, measurable surface, and conform to the shape of the tank. Because the geometry of the tank is known, a volume can be calculated by obtaining a single level measurement on a free liquid surface. For this reason, only the liquid volume will be measured as part of the volumetric inventory balance for 241-S-112. This approach is consistent with the leak mitigation strategy, as insoluble solids and gases will not "leak" into the soil.

Four primary error sources associated with volumetric leak detection have been identified for the 241-S-112 retrieval. These error sources are associated with the following measurements:

- Volumetric inflow
- Volumetric outflow
- Level measurement (and volumetric conversion)
- Volumetric changes resulting from chemical reaction or dissolution

Additional error is introduced from changes in barometric pressure and temperature, which can be minimized by measurement and compensation. These sources are not, however, significant contributors to the total measurement error. These external error sources will require identification and design compensation measure, which will be defined in a latter project phase.

Volumetric inflow and outflow are easily measured directly using flow meters with known and measurement accuracy. The liquid volume measurement (by level) can be more difficult to accurately obtain. In the absence of a free liquid surface, the interstitial liquid level (ILL) will not be uniform throughout the entire tank. Saltwell pumping of the SSTs by Interim Stabilization has demonstrated that fluid flow through the waste matrix is very slow. Often months are required for the ILL measured in the saltwell casing and LOW to become relatively equal (the discrepancy is primarily contributed to capillary action in the waste matrix. Numerous measurements are then required to obtain an accurate liquid profile. The more liquid level measurement locations, the greater the accuracy in the volume estimate. Filling the tank to a level where a free liquid surface is present will eliminate this problem, however is contrary to the leak mitigation strategy of liquid inventory reduction.

The main criterion for successful implementation of a volumetric methodology for leak detection in 241-S-112 is the presence of a measurable liquid level in the tank before, during, and after operation. Methods for measuring, and interpreting, interstitial liquid level need to be refined and final design concepts selected prior to definitive design of the LDMM system. Additionally, testing with actual waste samples is required to determine the effects of dissolution on solvent/solution volume and the correlation between saturation and specific gravity. Dynamic and static volumetric inventory balance leak detection techniques are described in the following sections.

Second to the volumetric inventory estimate error, is the error introduced by dissolution. Chemical reactions are not anticipated during the retrieval and are considered an error source. Dissolution, however, will occur continuously over the entire campaign. The successful completion of the retrieval project relies on the fact that the waste is comprised primarily of soluble constituents. As the waste dissolves the solvent (water), becomes saturated with the solute (waste salt). The result is an increase in liquid volume. For the initial portions of the waste retrieval campaign the solution will be predominantly saturated with sodium constituents. As the retrieval progresses and the sodium are depleted, the less soluble constituents will be dissolved. The result is a continuously changing dissolution ratio. For example, one gallon of water added at the onset of operations may produce 1.4 gallons of solution, while a gallon toward the end will only produce 1.2 gallons (this example is provided for illustrative purposes only). The accuracy of the compensation for dissolution will then become dependent upon how well the dissolution process is understood before retrieval, monitored during retrieval, and the initial constituent inventory estimates (chemical and porosity).

Test should be performed on actual waste sample to develop a model for the anticipated dissolution process. Correlations should then be made to directly measurable characteristics (e.g. specific gravity, speed of sound, opacity, etc.) to allow for real time compensation in the volumetric calculation. Analytical laboratory results that take days or months to acquire after samples are obtained, will not allow for continuous leak detection. It would be far from optimal to implement a system, which would detect a leak a month or longer after it occurs. Sampling will however allow for verification and/or adjustment of the dissolution model through the process.

Based upon the available data, a strategy and method(s) for in-tank leak detection have been developed. The preliminary LDMM strategy for 241-S-112 consists of in-tank dynamic testing (during retrieval operations) and static testing (operations suspended), and ex-tank drywell monitoring.

2.3.1.1.1 Dynamic Leak Detection

Dynamic leak detection will be performed while retrieval operations are ongoing. The volume of water added, waste removed, liquid level, and specific gravity will be measured continuously. An algorithm, or formula, will be used to take the inputs and determine if an inventory discrepancy greater than the instrument error exists. A discrepancy in the 241-S-112 liquid inventory greater than the error associated with the

measurements will be used as an indication of a leak. Samples may be taken throughout the retrieval campaign to adjust the dissolution model and maximize the accuracy of the compensation for dissolution. An illustration of the dynamic leak detection system is given in Figure 2-2.

A free liquid surface is assumed to not be available during retrieval operations for measurement. A liquid profile will be produced using the only two level measurement locations available: the dip tubes in the saltwell casing and the LOW. These measurements along with the waste porosity estimates and dissolution model will be used to calculate the liquid (solvent and solution) inventory.

Table 2-1 provides a list of measurements that are required, the proposed method of obtaining the measurement, and the intended purpose.

Table 2-1 Equipment List for Dynamic Inventory Balance Leak Test

Preliminary Engineering Equipment List for Static and Dynamic Volumetric Inventory Balance Leak Detection		
Monitoring Function	**Equipment/ Instrumentation**	**Purpose**
Free Liquid Surface Level Inside *retrieval* tank	Dip tubes (pressure transducer) Level gage	Indirect measurement of free liquid surface in the pump well. Input into algorithm for modeling ILL profile.
Specific Gravity	Dip tubes (pressure transducer)	Indirect measurement of liquid specific gravity pump well. Input into algorithm for compensation of dissolution.
Interstitial Liquid Level Inside *retrieval* tank	Gamma Probe and LOW	Indirect measurement of interstitial liquid level in the retrieval tank. Input into algorithm for modeling ILL profile.
Free Liquid Surface Level Inside *receiver* tank	Level Gauge	Direct measurement of free liquid surface in receiver tank. Secondary verification of outflow from retrieval tank.
Volumetric/mass flow into *retrieval* tank	Flow Meter	Direct measurement of volumetric or mass flow of dissolution water into the retrieval tank. Primary input into the leak detection algorithm.
Volumetric/mass flow out-of *retrieval* tank	Flow Meter	Direct measurement of volumetric or mass flow of waste out of the retrieval tank. Primary input into the leak detection algorithm.
Volumetric/mass flow into *receiver* tank	Flow Meter	Direct measurement of volumetric or mass flow of waste into the receiver tank. Redundant check on volumetric/mass flow of waste out of *retrieval* tank.
Additional Error Compensation	Pressure, Temperature, etc	Tertiary measurements acquired at TBD locations for the purposes of improving detection accuracy.
Chemical Analysis of recovered solution	Batch Sample and Laboratory Analysis	Verification and/or adjustment of dissolution model

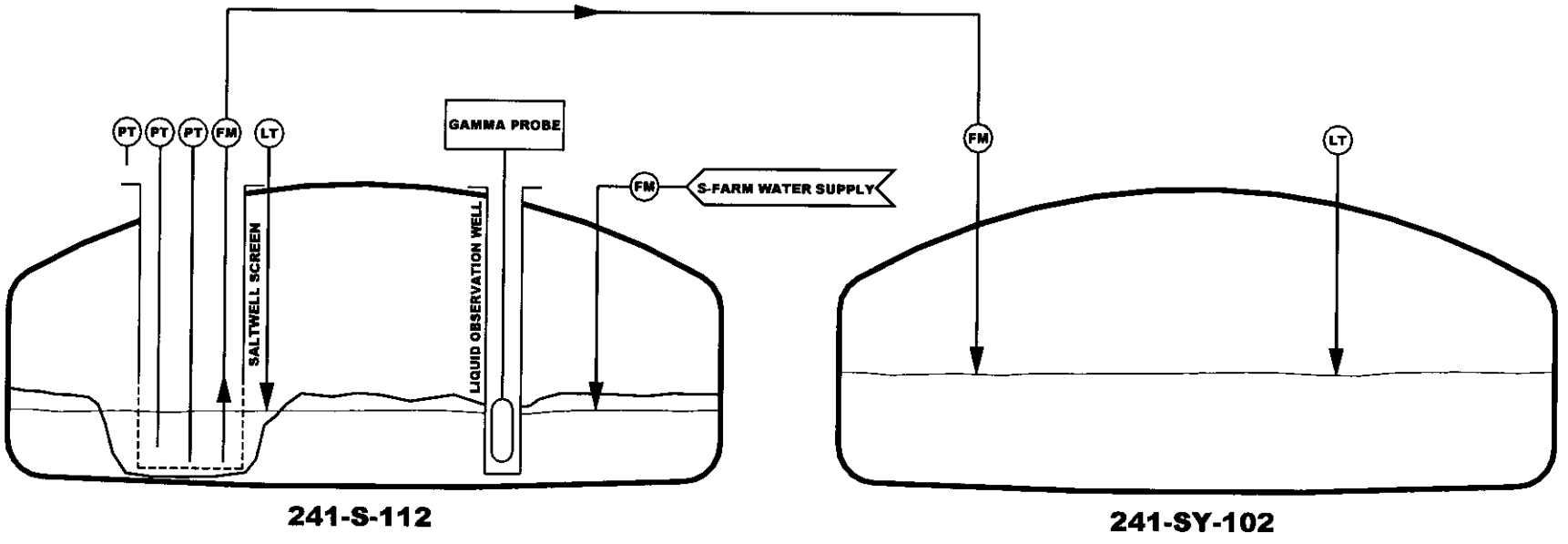

Figure 2-2: Dynamic Leak Detection Instrumentation

2.3.1.1.2 Static Leak Detection

Static leak detection is largely the same as dynamic leak detection with the absence of an inflow or outflow from the tank. This allows the tank to be treated as a closed loop system. Volumetric precision methods (static leak tests) measure changes in the liquid surface and convert these level changes to volume changes using the known geometry of the tank and waste porosity estimates. Compared to dynamic leak detection, there is a high degree of precision by the elimination of several variables. The precision of the static test is a function of the following:

- Equilibrium of the tank (amount of ongoing dissolution or flowing liquids),
- Accuracy of the liquid level measurement, and
- Estimated waste porosity.

In general, the longer the duration of the static test the greater the accuracy. The longer the duration allowed for the tank to reach equilibrium, the more accurate the static test. The accuracy will continue to increase with the duration of the test as long as the influences of error associated with the input measurements are relatively small contributors. For longer test durations, the uncertainty associated with the input variables establishes a maximum accuracy threshold, which cannot be extending the test duration.

An accurate leak detection system is desirable for the reduction of risk. Unfortunately, the longer the test duration (to reach equilibrium and perform the test) and greater the frequency of tests, the longer liquid is present in the tank. The leak mitigation strategy is to minimize both the liquid volume inventory and duration that liquid is present. A compromise between the two will have to be reached, based on the performance expectations of the system developed.

Table 2-2 Equipment List for Static Volumetric Precision Leak Test

Preliminary Engineering Equipment List for Static Volumetric Precision Leak Test		
Monitoring Function	**Equipment/ Instrumentation**	**Purpose**
Free Liquid Surface Level Inside *retrieval* tank	Diptubes (pressure transducer) Level gage	Indirect measurement of free liquid surface in the pump well. Input into algorithm for modeling ILL profile.
Interstitial Liquid Level Inside *retrieval* tank	Gamma Probe and LOW	Indirect measurement of interstitial liquid level in the retrieval tank. Input into algorithm for modeling ILL profile.
Additional Error Compensation	Pressure, Temperature, etc	Tertiary measurements acquired at TBD locations for the purposes of improving detection accuracy.

Figure 2-3: Static Leak Detection Instrumentation

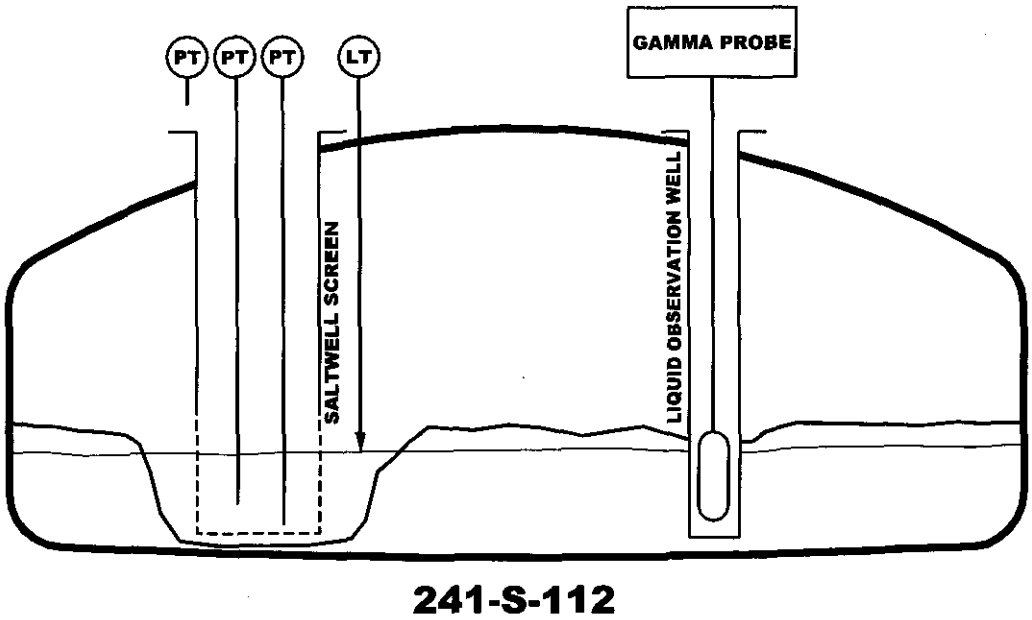

Based on LVDG retrieval rates and anticipated operational scenarios, a duration of 168 hours of continuous retrieval operation between static leak test frequency was selected to maximize operational continuity while providing acceptable operational checks of tank integrity. This duration corresponds to the standard time between line flushes now used by the Interim Stabilization project and incorporated into the preliminary 241-S-112 retrieval operation strategy. An eight-hour static test will be performed during the shutdown period to perform the weekly flushes. This selected duration is based on the desire to mitigate tank leakage by reducing the retrieval duration. Additional retrieval duration time associated with static leak testing provides more time for an undetected leak to contaminate the soil column.

Leak tests may also be performed during any unanticipated outages. The duration of these tests will be dependent upon the length the tank remains in equilibrium.

2.3.1.2 Ex-Tank Methods

Existing drywell casings and radiation monitors will be used for ex-tank leak detection. However, a variety of ex-tank methods with potential utility at Hanford have been identified and evaluated (RPP-6797). A series of Partitioning Interwell Tracer Tests (PITT) have been performed and the results are under analysis. Based on the analysis

results, the developmental ex-tank technology that best meets the performance requirements will be incorporated into the baseline technology.

2.3.2 Leak Monitoring Design Concepts

Leak monitoring is the quantification of a liquid waste release volume from an SST after detection of a leak, during or after waste retrieval operations (only past leaks are excluded). A leak volume estimate must be accurately predicted to quantify the environmental impact resulting from a leak. The requirement for leak monitoring is as follows:

> **Estimate the total volume of a release, if one occurs, and the accuracy of this estimate.**

The accuracy of the estimated leak is necessary to establish the probability that the Target Leak Detection Rate (TLDR), or the retrieval release criterion (RRC) has, or has not, been exceeded.

The same technologies and methods used to address the leak detection function can also be used to address the leak volume quantification requirements for the leak monitoring function. The same internal volumetric method recommended for leak detection can also provide calculations of leak rate as part of the tests. The flow rate and estimate of when the leak initiated can be used to estimate the volume of a release.

If a release were to occur, the volume could be estimated from the results of the volumetric tests conducted before, during, and after retrieval operations. Estimating the volume of a release produced by retrieval operations requires that the integrity of the tank be known immediately before retrieval operations begin. The most accurate estimates can be made if the test conducted immediately before the retrieval operations begin indicates that the tank is non-leaking.

2.3.3 Leak Mitigation Design Concepts

The primary goal of the LDMM system is to employ a technology that can prevent or mitigate the potential for a leak to result during waste retrieval operations and/or can minimize the impact of a leak. The following requirement identifies an administrative control for implementation of a plan to minimize the risk to the environment and to minimize any potential human health effects. The requirement is as follows:

> **A tank-specific leak response and mitigation plan shall be developed that minimizes the leak risk potential and reduces the environmental impact of a leak, if one occurs during waste retrieval operations.**

Leak mitigation is the primary means of minimizing environmental impact caused by releases during retrieval of SST waste. By designing retrieval systems with leak mitigation features, such as reducing the amount of free (drainable) liquids and minimizing retrieval operations duration, potential leak volumes can be minimized.

Minimization of liquids in 241-S-112 during retrieval operations is an important consideration in minimizing environmental damage, should a leak occur. To minimize liquids within 241-S-112 during retrieval operations, the rate of liquid addition will be controlled to approximately match the rate of liquid removal. In the LVDG dissolution retrieval method, the removal of saturated liquid via the saltwell pump will be limited by the flow rate of liquids through the waste to the saltwell screen. Historically, maximum flow rates of approximately 4 to 6 gpm have been recorded during saltwell pumping operations. The new saltwell pumping system is anticipated to increase this outflow to approximately 8 to 10 gpm. This flow rate is established from initial testing performed in shop demonstrations and preliminary results of units installed in 241-AX-101, 241-BY-105 and 241-BY-106. The flow rate of water introduced into the tank via the Water Distribution System spray nozzles will be adjusted to match the flow rate of waste discharged from the tank via the saltwell pump. Because the distribution pattern of the water on the surface of the waste is dependent on flow rate through the sprinkler nozzles, adjustment of the water introduction rate may be time-averaged (i.e., operated part-time at design flow rates and secured part-time to achieve desired average flow rate).

In addition to reducing the liquid inventory, retrieval operations will be accelerated to the greatest extent possible to minimize the duration liquid is present. Measures to accelerate the retrieval include:

- Utilizing the larger capacity saltwell pumping system.
- Operating 24 hours a day, 7 days a week.
- Minimizing the static test duration and frequency.

The alternative of not retrieving the S-112 waste will result in its eventual and certain release, when the tank ultimately fails. If the tank is not retrieved, the risk is proportional to the curies trapped in the residual waste (523,000 gallons). The assured eventual release of all 523,000 gallons if the tank is not retrieved carries a much higher risk than the potential loss that might occur during retrieval. The risk of not retrieving is estimated to be about 1,000 times greater than if the waste is retrieved and a leak does occur during retrieval, based on historical Hanford tank leak data. Therefore, any waste retrieval will reduce the long-term risk to human health and the environment.

2.4 AUTHORIZATION BASIS ASSESSMENT

The scope of work identified in this Preliminary Engineering Report for demonstration of saltcake dissolution retrieval is based to a large extent upon activities that have been previously analyzed and documented (saltwell pumping) in the Tank Waste Remediation System Final Safety Analysis Report (a.k.a. FSAR, HNF-SD-WM-SAR-067). An assessment of the project's proposed configuration and operating strategy against the approved Authorization Basis (AB) provided in the FSAR should be performed during the early conceptual design phase to verify that these activities are within the operating limits bounded by the FSAR. The planning presented in this report includes performance of an AB assessment and preliminary hazard analysis during the conceptual design phase of the project, followed by development of additional documentation to support

incorporation of the dissolution retrieval systems into the FSAR during the detailed design phase. It is expected that only minor descriptive changes will be required and that this information can be included as part of the annual AB update performed by Tank Farms personnel.

2.5 PERMITTING

An Environmental Approvals and Permitting Plan prepared for the Saltcake Dissolution Retrieval Project (RPP-7596) describes the environmental actions, required permits, and other agency approvals affecting the project. This document, which addresses deployment of the dissolution retrieval system in 241-S-112, presents a strategy and plan for meeting environmental requirements during construction and installation of systems, structures, and components for waste retrieval. The Environmental Plan includes a summary of required permits and approvals, planning assumptions, cost estimates, and schedule information for implementing the selected environmental permitting strategies. The information provided in this document has been used as the basis for cost and schedule information presented in this Preliminary Engineering Report.

This page intentionally left blank.

3.0 DEVELOPMENT AND EVALUATION

This section describes development options for solvent introduction into the tank, general broadcast spray nozzle placement and spray patterns, and instrumentation for waste stream characterization. Also discussed are equipment placement, tank ventilation, and transfer piping consideration.

It is noted that the waste steam instrumentation discussed in this section is developmental, and is not required for safety or operation control purposes. However, this equipment is expected to significantly improve the characterization of the waste transfer stream, and can be used to improve saturation levels and evaluation of the achievement of transfer goals. Demonstration of the effectiveness of this new instrumentation will greatly benefit saltcake retrieval operations in other tanks.

3.1 RETRIEVAL OPERATIONS

Two primary modes of operation were considered for the introduction of solvent to the tank: intermittent and continuous. For both methods of addition, it is assumed that the saltwell pumping extraction of solution will be continuous. An additional operational mode was considered that could be implemented with both continuous and intermittent solvent addition: solvent/solution recirculation. One objective of the 241-S-112 Saltcake Retrieval Demonstration is to minimize the volume of DST space consumed by identifying methods of maximizing the saltcake dissolution rate through effective utilization of the solvent distribution and minimizing retrieval duration by incorporating effective waste transfers.

3.1.1 Intermittent Water Additions

The operating approach for intermittent solvent addition would be to increase the rate of addition and decrease the duration of addition proportionally to balance with the removal over a given period of time. For example, the introduction rate could be tripled for an eight-hour period such that the average introduction rate over a twenty four-hour period is equal to the rate of solution removal.

The primary advantage to this alternative is that less automation may be required for this alternative; an operator could manual turn the system on and off during the same shift. This alternative will also allow for solvent introduction at higher flow rates than the saltwell pump is capable of recovering (8 to 10 gpm). This may be required in order to increase the water distribution range to cover the entire waste surface area. The primary disadvantage for this alternative include:

- Increased liquid inventory and potential leak volume
- Increased likelihood of waste channeling, short circuiting, and decreased retrieval efficiency
- Process control difficulties from varying solution saturations.

Part of the leak mitigation strategy is to minimize the liquid inventory in the tank at all times. In this way the potential leak volume is minimized. If a leak is detected during retrieval, the duration that waste is leaking is a function of the liquid inventory and duration to remove the liquid inventory. In the intermittent water addition alternative, the rate of addition would be greater than the rate of removal (during the addition period) and an inventory of solvent would accumulate in the tank.

The saltwell pumping system removes liquid from the salt matrix at the same rate that the liquid is relinquished. Intermittent liquid additions will add water at a rate greater than the removal rate. It may be difficult to control the duration of additions as to not exceed waste saturation. In the event the waste is completely saturated and water is still added, short-circuiting will occur. This will result in either channeling and/or over-surface flow. Neither scenario is desirable and will result in unsaturated or not fully saturated solution from reaching the saltwell pump. This will decrease retrieval efficiency, result in varying dilution ratios and/or increased waste volume generation, and complicate the chemical adjustment requirements, if required.

The potential shortcomings of this alternative could be reduced to some extent by monitoring the specific gravity of the solution in the well (via dip tubes) and suspending water additions to the tank when the solution density begins to decrease.

3.1.2 Continuous Water Addition

The operating approach for continuous solvent addition would be to match the rate of solvent addition to the rate of solution removal. A steady state would be achieved where the inventory of liquid within the tank is minimized at all times. This requires that the water introduction system be automated such that the flow rates in and out of the tank be balanced at all times. The advantages to this method are the elimination of the potential problems that could result from intermittent additions (see Section 3.1.1).

This alternative is selected for the retrieval of 241-S-112 primarily due to the concerns over DST space limitations. Steady-state retrieval operations will allow for accurately diluting the recovered waste stream. Varying solution saturation levels would likely result in over dilution in the event of tank over saturation. This in turn would result in an increased waste volume being sent into the DST system.

The precise means of operating a continuous addition system is not completely resolved. The proposed design utilizes three solvent addition points (a.k.a. sprinklers), which could operate simultaneously or singularly. In the event sufficient coverage cannot be obtained by utilizing a 2 1/2 to 3 gallon per minute flow, the flow could be increased to 8 to 10 gallons per minute. One sprinkler would operate for a set duration, be turned off, the next sprinkler turned on and the process repeated.

3.1.3 Solution Recirculation

Considerable uncertainty exists surrounding the ability to manage the removal of only saturated solutions from the tank. Initially, it is anticipated that the solvent added will quickly saturate and only saturated solutions will collect in the saltwell screen. As waste

volume gets low and the more soluble waste constituents have already been recovered, it is likely that the collecting solution will be less than fully saturated. There are two potential means of managing this likelihood: stopping and allowing more time for dissolution and solvent recirculation. There is little doubt that the added agitation of recirculating the solution will speed the dissolution process.

The complexity (and associated costs) of adding a method of solution recirculation must be weighed against the time (and subsequent costs) gained by utilizing the system verses not using such a system. At this time, a solution recirculating system is not recommended. However, the retrieval schedule narrowly fits within the operating window outlined in the TPA milestones. Solution recirculation may be one means of accelerating the waste recovery schedule and should be thoroughly evaluated in the conceptual design phase of the project.

3.2 WATER DISTRIBUTION CONFIGURATION

The risers available on 241-S-112 were examined to identify potential installation locations for a water distribution system. Combinations of one, two, three, and four "sprinkler arrays" were considered to effectively cover the waste surface with solvent. There are numerous obstructions suspended from the tank dome. The most significant obstructions are the saltwell screens in Risers 5 and 13. Other obstructions include the liquid observation well in Riser 8 and temperature probe in Riser 4. The "shadowing" effect from this equipment varies for the various sprinkler array options.

3.2.1 Single Sprinkler Option

The single sprinkler approach is to install a sprinkler centrally in Riser 13 (see Figure 3-1). The large shadow created is the result of the saltwell screen in Riser 5. The sprinkler nozzle range would have to be near 40 feet radially to effectively cover the entire waste surface. This approach offers numerous disadvantages, which eliminated this option from further consideration. The primary disadvantages include:

- Requires removal and disposal of the saltwell screen from Riser 13 (Long Length Contaminated Equipment [LLCE])
- Large shadowed area created by saltwell screen in Riser 5
- Minimal control over application of solvent

Figure 3-1: Single Sprinkler Option

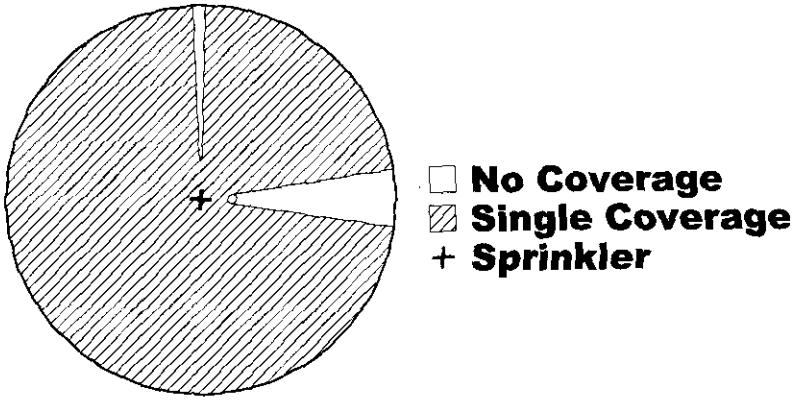

3.2.2 Dual Sprinkler Option

The dual sprinkler approach is to install sprinklers in diametrically opposed risers. As can be seen from Figure 3-2, this option is only marginally better than the single sprinkler option, only eliminating the shadowing effects caused by the saltwell screen. Sprinkler installation risers would be a significant concern with this option. The only available risers are centrally located and many are occupied with LLCE. For these reasons the dual sprinkler option is not considered a viable alternative.

Figure 3-2: Dual Sprinkler Option

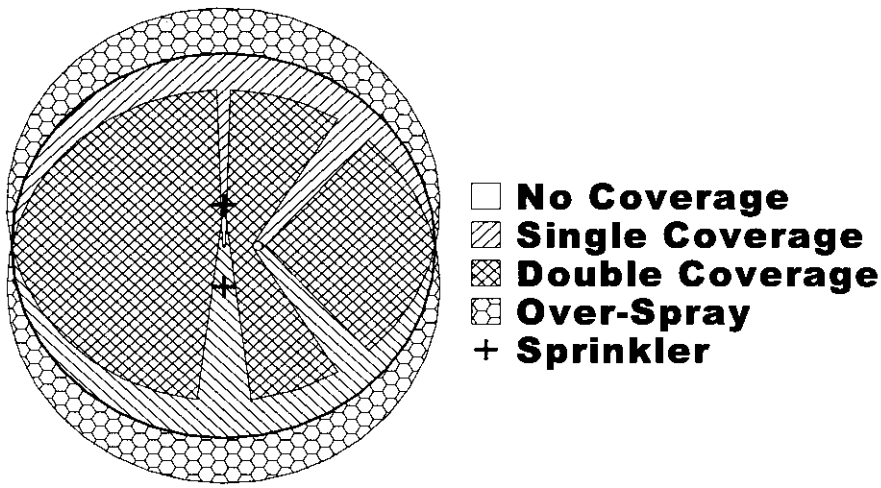

3.2.3 Three Sprinkler Option

The three-sprinkler approach is to install sprinklers in risers equidistant from the center of the tank and 120° apart. Risers 11, 14, and 16 are the only available risers suitable for this installation option. As can be seen from Figure 3-3, a significant volume of solvent (approximately 40%) will be projected against the tank wall. This may or may not be of significant concern but sprinkler design issues such as this will be addressed in conceptual and definitive design. This configuration will likely clean the tank walls and saltwell screens near the center of the tank. Additionally with three sprinklers, there is some added control over the dissolution process. If a particular section of the tank is being removed more quickly, the sprinkler supply of solvent to the area could be throttled or turned off until the other areas catch up.

This option will require the removal and relocation of two pieces of equipment. The breather filter and SHMS on Riser 14 will require removal and relocation, or replacement and disposal. For the purposes of the estimate the SHMS cabinet will be relocated and the breather filter replaced.

Figure 3-3: Three Sprinkler Option

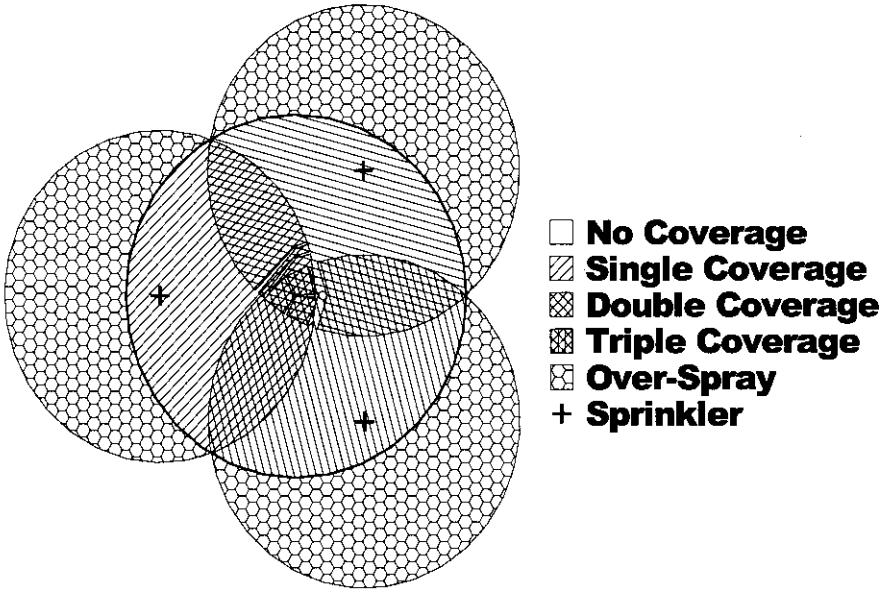

3.2.4 Four Sprinkler Option

The four-sprinkler approach is to install sprinklers in risers equidistance from the center of the tank and 90° apart. Risers 1, 2, 3, and 4 or Risers 5, 6, 7, and 8 are the only available risers suitable for this installation option. Riser 3 contains a level gauge, Riser 4 contains a temperature probe, Riser 5 a saltwell screen, and Riser 8 contains a LOW. A LLCE removal will therefore be required for installation in either configuration. One LLCE removal is required for the first option and two for the second. For this reason, Risers 1, 2, 3, and 4 were chosen for this alternative arrangement. As can be seen from Figure 3-4, there is significant overlap in the sprinkler coverage due to the near central location of the four risers. This is far from an ideal configuration. A stabilized tank results in a concave waste surface with the waste at the center of the tank several feet lower than near the periphery. The near center location of the installation risers also eliminates most of the ability to control the dissolution process. Shutting off two of the sprinklers will still provide nearly even coverage. Additionally, this option eliminates many of the available risers, leaving a riser shortage. If this option were chosen, it is likely that additional equipment removals would be required to accommodate the necessary in tank equipment. Installation of an additional riser is considered to be cost prohibitive.

Figure 3-4: Four Sprinkler Option

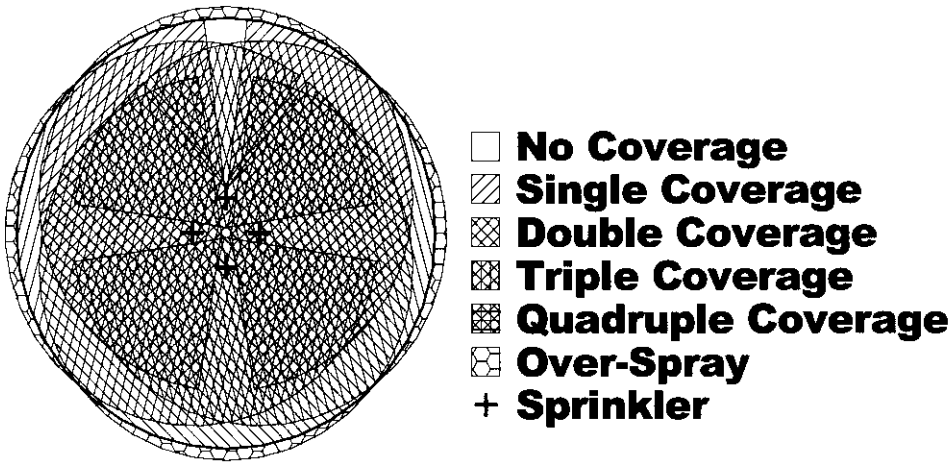

3.2.5 Preferred Sprinkler Arrangement

The preferred option is to install three sprinklers in the tank. Utilization of three sprinklers is preferred over four sprinklers due to the shortage of available risers as discussed in Section 3.4. Utilization of three sprinklers instead of one or two is preferred due to the improved distribution of solvent associated with three sprinklers. This alternative will wash the tank walls and distribute most of the solvent a significant distance from the saltwell pump. This should increase recovery efficiency and shorten the retrieval operation duration. Numerous sprinkler designs will have to be evaluated during conceptual design to determine the best-suited method/technology to distribute the solvent. One option shown in Figure 3-5 is to install sprinklers with elliptical spray patterns to minimize solvent distribution overlap and overlap.

Figure 3-5: Preferred Sprinkler Option

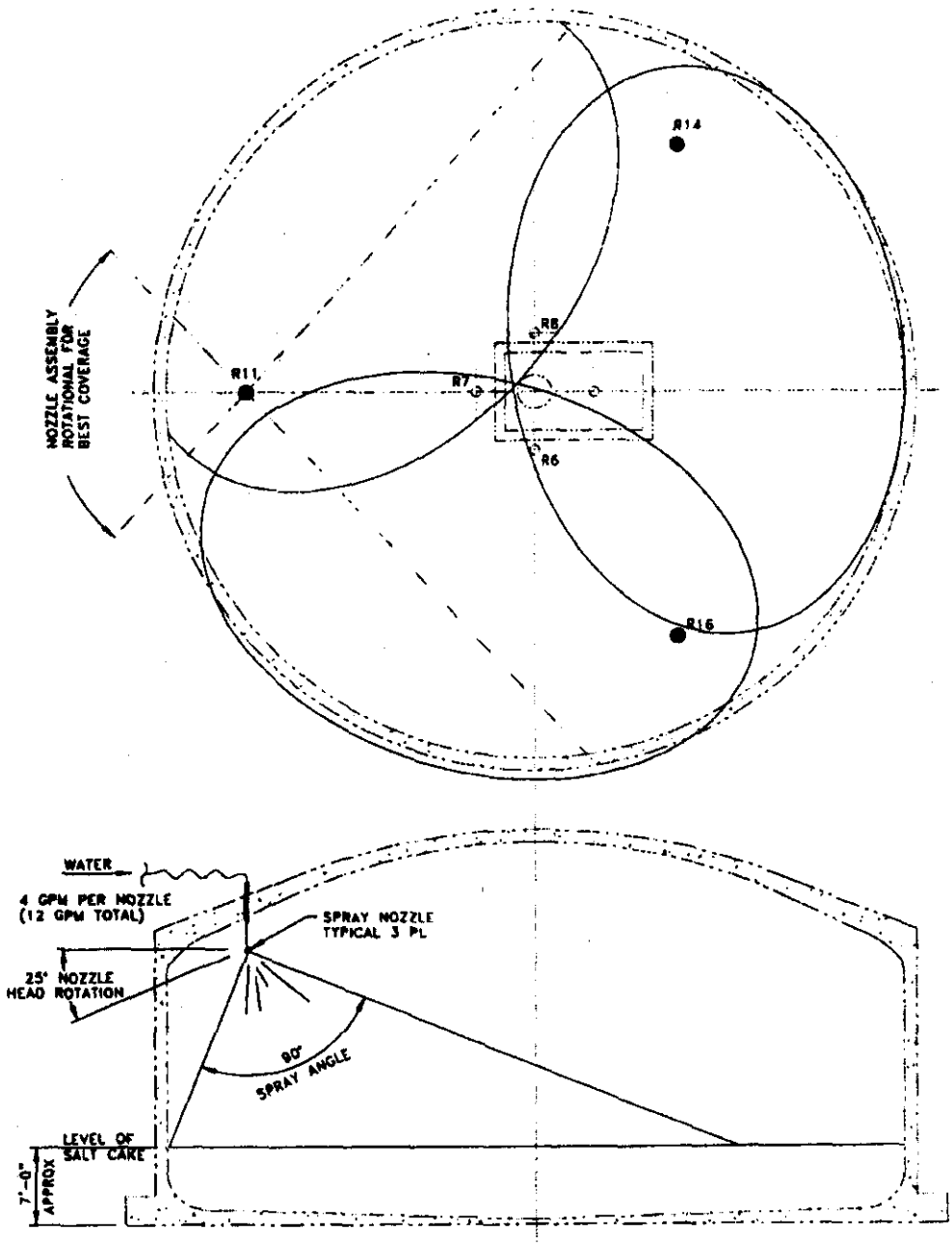

3.3 WASTE CHARACTERIZATION INSTRUMENTATION

Four instrument systems in various stages of development will be included in the S-112 Saltcake Retrieval Demonstration Project to characterize the waste transfer stream and to measure the amount of residual waste left in the tank. These instruments include a density and solids monitor, a chemical process monitor, a radionuclide monitor, and a 2nd generation Topographical Mapping System (TMS) system. These instrumentation systems are not required for operations, but are expected to provide data that will be useful in adjusting the waste stream dilution level and assessing the achievement of project goals. A function and description of each instrument system is given in the following.

3.3.1 Density and Solids Monitor

In-line brine density is a primary process monitoring parameter. It will be used as an indicator of brine saturation, as part of the in-tank leak detection monitoring calculations (with volumetric flowrate as part of the mass balance), and to compliment grab-sampling and chemical monitoring. Once brine chemistry is established via grab samples and/or chemical process monitoring, brine density can be used directly by process engineers and operators to evaluate the effectiveness of dissolution activities and to avoid line-plugging conditions.

Brine density (specific gravity) measurements from dip tubes in the saltwell screen do not properly account for the addition of dilution water – dilution water added near the pump inlet is neither completely included nor completely excluded from the measurement. Furthermore, the dip tubes do not work when the liquid level drops below about 11.8 inches (30 cm), so this information will not be available for the later stages of retrieval when this condition occurs. To avoid these problems, an in-line densimeter, which measures the brine density after it leaves the pump recirculation loop will be utilized. Since dilution water addition is currently set to achieve a specified brine density in the transfer line, an in-line brine densimeter will allow direct verification of this setpoint and reduce excessive dilution and volume of waste transferred to the DSTs.

The in-line brine densimeter will also provide information on the solids-loading in the transfer line – an important parameter for tracking the retrieval of insoluble wastes and understanding line-plugging. The transfer of suspended solids is an important measurement for both process understanding and an accurate mass balance. At the very low flow rates anticipated with the saltwell pump, the transfer line is subject to plugging if the solids loading is too high and the particle size is too large to stay in suspension. The densimeter will provide a warning of these adverse conditions so dilution flows can be increased or the transfer line flushed to prevent plugging.

3.3.2 Chemical Process Monitor

Success of the S-112 retrieval demonstration will be judged in part by the amount of brine sent to the DST system and the time required to retrieve the waste. To minimize the amount of brine produced for a given volume of waste dissolved and the time required to pump the liquid to the DST system, it is important that the brine produced be

nearly saturated with waste salts. While the brine may be saturated during the early stages of the retrieval, lower dissolution rates and unsaturated brine can be expected during the later stages. The dissolution process itself consequently needs to be monitored and adjusted as conditions change to ensure that the brine is nearly saturated all the time. Optimal dissolution rates translate directly to minimal DST space required, minimal retrieval time, and reduced overall costs.

The dissolution process chemistry can be monitored by collecting frequent grab samples, but these require costly laboratory analyses and results would typically not be available in time to make process control decisions. Alternatively, a chemical process monitor will be used to monitor the concentrations of several key constituents in the brine and provide near real-time results. This will provide crucial chemical information for controlling and understanding the retrieval. Though grab samples will still be required, the use of a chemical process monitor will reduce the number required, and significantly reduce cost and worker exposure. Data from the chemical monitor will be combined with in-line brine density measurements to determine the brine's degree of saturation.

The chemical process monitor is also expected to provide valuable insight into the dissolution process in S-112. The rates at which various salts are removed from the tank can be used to improve future retrievals, via adjustments of dissolution water temperature, pH, chemical additions, or the retrieval strategy itself. Such information could be useful in the application of alternative waste treatments, such as the selection of an optimal waste fraction for the sodium nitrate clean salt process.

In addition, monitoring data on concentrations of the primary brine species will also be useful in estimating the concentrations of minor, but important, species. If, for example, the grab sample concentrations of pertechnetate and one or more of the monitored species were well correlated, the brine concentration of pertechnetate between grab samples could be inferred from the monitoring data, and thus a better accounting of Tc^{99} would be obtained.

3.3.3 Radionuclide Monitor

There are two information needs that can be satisfied by radionuclide monitoring; the quantification of total and individual radionuclides transferred (for satisfying the TPA milestone and for inventory tracking) and the understanding of radionuclide distribution in the retrieved liquors for optimization of the retrieval/disposal process.

One of the major criteria for success of the S-112 dissolution process is the removal of 550 Ci of long-lived mobile radionuclides (^{14}C, ^{79}Se, ^{99}Tc, ^{129}I, ^{234}U, ^{235}U, and ^{238}U) reducing the long-term risk posed by the tank residuum. The most defensible way to show the criterion is met is to quantify the radionuclides as they are retrieved using an inline radionuclide monitoring system. The transferred quantities would be compared to an ending in-tank radionuclide measurement of the residuals.

The S-112 saltcake dissolution process is expected to preferentially leach the more soluble salts and mobile radionuclides from the waste early during retrieval. The

immobile radionuclides will remain in the tank until they are either sluiced or dissolved using a more aggressive solvent system. To the extent that the retrieval process effects a separation of radionuclides and salts based on solubility, it provides a potential means to obtain relatively low-activity and high-activity salt waste fractions. Monitoring the transfer of radionuclides from S-112 will allow evaluation of alternative treatment systems that offer the potential to reduce the amount of waste that goes to the vitrification plant. These alternative treatment systems may result in large cost savings in balance of mission applications.

It is expected that these needs will be met by a spectral gamma system, similar to that used on tank AZ-101 thermocouple removal, deployed on the transfer line in a region where the line is running full.

3.3.4 Topographical Mapping System

The Topographical Mapping System (TMS) was developed in 1993 with Tank Focus Area support by a team from Oak Ridge national Laboratory, Pacific Northwest National Laboratory, and Mechanical Technology Incorporated. It was specifically designed to support characterization and retrieval operations in the Hanford Site tanks, and currently a 1st generation unit is set up for use in 241-U-107.

The TMS uses reflected laser light to map the reflecting surface with a typical accuracy of 0.25 inches at 45 feet, which approaches the maximum range. Estimates of waste volume changes determined by subtracting one scan from another are typically accurate to better than 7 percent. The TMS cannot map surface areas that are shadowed from the laser.

A 2nd generation TMS will be developed for the S-112 Demonstration Project and used to monitor changes in tank volume during the waste transfer process, and to estimate the residual volume at the completion of tank retrieval.

3.4 EQUIPMENT PLACEMENT RATIONALE

Following the placement of the spray nozzles in Risers 11, 14, and 16, the remainder of the risers required for equipment installations are selected. These remaining pieces of equipment are:

- Saltwell screen and pump
- Dip tubes
- Level Gauge(s)
- Thermocouple tree
- CCTV Camera
- Combustible/flammable gas monitor
- Passive Ventilation Breather Filter/Vent Port

Riser selection and placement of each piece of equipment was established based upon the following criteria (listed in order of importance):

- LLCE removal minimization,
- Equipment performance optimization and shielding,
- Infrastructure and utility modification minimization, and
- Tank S-112, S-Farm, and drywell access optimization.

A preliminary recommended riser utilization schedule is included in Table 3-1.

Table 3-1 Riser Utilization

Riser	Size	Utilization and Comments
1	4"	Not Used
2	4"	SHMS
3	4"	Level Gage
4	4"	Temperature Probe
5	12"	Not Used – Potential TMS
6	12"	Camera
7	12"	Vent Port
8	12"	Liquid Observation Well
11	4"	Spray Nozzle
13	42"	Saltwell Screen and Pump
14	4"	Spray Nozzle
16	4"	Spray Nozzle (and Condensate Return, if needed)
MH	42"	Not Used

3.4.1 Saltwell Pump and Dip Tube Location

Tank S-112 has a dish-shaped bottom making it critical to locate the saltwell pump at or near the tank center to maximize the recovery volume and minimize the liquid inventory during retrieval. In addition, the pump should be located in a pit to reduce worker radiation exposure and for other associated ALARA reasons. Two risers, which are adequately sized (i.e., 12 inches or larger) to meet these requirements, are Risers 5 and 13.

Both Riser 5 and Riser 13 contain saltwell screens. Riser 5 contains an old saltwell pump and dip tubes, installed in July 1978, legacy of the last pumping campaign. Riser 13 contains a newly installed screen, installed in October 2000, to accommodate a new saltwell pumping system to be installed in the second quarter of FY 2002. Interim Stabilization has had no success in restarting old pumps after extended down time and replacement is always executed. Riser 13 is the preferred riser to contain the pump to support the Saltcake Dissolution Retrieval Demonstration due to its central location, location within a pit, and size. Utilization of this riser will require removal of the existing pump and jumper, pump legs, dip tubes, and lancing of the saltwell screen. The pump

legs and dip tubes could be cut up and disposed of in a standard burial box along with the other removed components.

An early project demonstration start date could make use of the saltwell pumping equipment installed by the Interim Stabilization Project in 2002. This would save significant dollars by eliminating otherwise redundant engineering and fabrication efforts. Additionally, and most significantly, a LLCE removal and disposal would be eliminated. Substantial potential savings could be incurred by coordinating the retrieval with the upcoming stabilization campaign.

3.4.2 Ventilation Port

The ventilation port should be as large as possible, and practical, so as not to impede air inflow to the tank, even when ventilation is passive, as is the current baseline. If active ventilation becomes required, an adequate inlet port becomes essential when the waste volume gets low and the minimum tank vacuum is restricted to prevent exceeding established negative pressure limit. Risers 5, 6, 7, and 8 are 12-inch risers and Riser 13 is a forty-two (42) inch riser; Riser 7 is recommended for the ventilation port. The remainder of the risers on the tank are 4-inches. An additional tank access is available through the condenser hatchway in the condenser pit. Risers 5 and 13 are in the 241-S-12A Pump Pit and are occupied with saltwell screens. Riser 8 contains a liquid observation well. Riser 7 had been designated as the ventilation riser previously, and will serve this purpose again for the dissolution WRS.

3.4.3 CCTV Camera

The CCTV camera used to observe the WRS operations requires a 10-inch or larger riser to accommodate installation into the tank. Following the logic for the placement of the other components, the only available riser is Riser 6.

3.4.4 Ventilation Exhaust

A ventilation exhaust port is not required for the baseline passive ventilation system. However, if active ventilation should become required, following a similar rationale for the ventilation inlet filter placement, the only suitable location for the exhaust stream is the riser in the condenser pit. The other available risers are not adequately sized or sufficiently distant from the ventilation inlet. If it is determined that active ventilation is required the existing cover plate will be replaced with a steel cover with 12-inch flange. The cover plate will seal to the condenser pit with a compressible gasket. A flexible duct will connect span the gap between the pit and the exhauster.

3.4.5 Combustible Gas Monitor

A combustible gas monitor/flammable gas monitor (CGM) may need to be installed in the tank dome. Location of this piece of equipment is less critical than the other pieces of equipment. Ideally it is located away from the ventilation inlet and outlet. Airflow near these locations may skew the actual combustible gas concentration by dilution with ambient air. Riser 6 has sufficient room to contain both the CCTV camera and a CGM. Location in this riser will eliminate the need for an additional riser entry. If collocation

with the camera is deemed impractical, the dome space CGM could be placed in Riser 1 or 2. Location in Riser 2 would however, place the CGM between the ventilation inlet and outlet, possibly resulting in inaccurate flammable gas concentration readings. Interim Stabilization previously placed a CGM directly below the Pump Pit cover plate on other installations where a CGM was required, if a CGM is required to support 241-S-112 waste retrieval, this may be the selected location.

A Standard Hydrogen Monitoring System (SHMS) will be used as the combustible gas monitor. The isolated SHMS cabinet near Riser 14 will be relocated to serve this purpose.

3.4.6 Condensate Return

In the event an exhauster is incorporated into the final design a condensate return from the exhauster to the tank would be required. The condensate return line from the exhauster does not have any special requirements. It is desirable, however, from a mass balance perspective to return the condensate to the tank. The condensate return may be through any available riser or combined with other equipment into a common riser.

3.4.7 Temperature Probe

The existing thermocouple tree in Riser 4 is functioning and will continue to be used for the WRS. The temperature measurements will be used primarily for the internal tank volumetric balancing and leak detection.

3.4.8 Dip Tubes

Dip tubes will be installed in the saltwell screen in Riser 13 adjacent to the saltwell pump legs. The dip tubes will function to obtain specific gravity measurements as well as liquid waste depth measurements. This will eliminate the need for a second dedicated level measurement device. Installation of the dip tubes in the same well as the saltwell pump has been the convention of the Interim Stabilization project. In the case of 241-S-112, there are two adjacent wells that could support installation of the dip tubes.

Installation of the dip tubes in the saltwell screen in Riser 5, would produce more accurate measurements by distancing the tube/pipe outlet(s) from the disturbances created by the waste re-circulating eductor, but may require removal of the abandoned saltwell pumping system from Riser 5 to gain access. This would also, however, raise concerns that the level in the Riser 5 well is not the same as in the Riser 13 well. If the level differences were significantly, the pump in Riser 13 could lose prime. For this reason, Riser 13 is preliminarily selected to contain the dip tubes.

3.4.9 Level Gauge(s)

An ENRAF™ level gauge is currently installed in Riser 3. The design of the ENRAF (plumb-bob) will not allow for operation concurrent with the water distribution system. The water impacting the wire and plummet may cause it to swing and potentially break the relatively fragile instrument and produce varying level feedback. One solution is to relocate the existing ENRAF be relocated to Riser 5 in the central Pump Pit. This would

require the removal of the abandoned saltwell pump and jumper from Riser 5 and incorporation of a removable ENRAF design to support potential Pump Pit cover plate removal for potential equipment repairs. This would locate the plummet the greatest distance from the distribution sprinklers and internal to the old saltwell screen. If it is determined that real-time surface level measurements are not required, then the ENRAF should be left in position in Riser 3. If a central location for the ENRAF is not desired then an alternative riser will have to be selected.

The dip tubes and weight factor transmitter currently incorporated in the saltwell pumping system will be used to provide liquid level data at the pump inlet in Riser 13.

A Liquid Observation Well (LOW) is installed in Riser 8. A neutron probe will be used in the LOW to obtain the Interstitial Liquid Level (ILL) measurements to be used by the leak detection system.

3.5 TANK VENTILATION

Tank S-112 is passively ventilated through a breather filter installed on Riser 14. The introduction of water through distribution devices is anticipated to generate aerosol with the potential of saturating the passive HEPA filter. Additionally, the tank is postulated to contain entrained gases. Disruption of the salt matrix is anticipated to release toxic and flammable gases. Until the water retrieval system design is developed in sufficient detail to estimate the aerosol generation and gas release, the ventilation requirements cannot be fully ascertained.

There are numerous options that should be considered in subsequent phases of the project for ventilating the tank and preventing saturation of the breather filter. One option is to continue passively ventilating 241-S-112. The primary advantage to this option is not having the increased expenditure and maintenance associated with an exhauster. A heater placed between the riser and filter could be used to protect the filter medium from saturation. In the case of the 241-U-107 Poof of Concept, the breather filter was heat traced and insulated (RPP-8382). Another option is to make use of the portable exhauster, POR-004, installed between 241-S-103 and 241-S-106. This exhauster would require, at a minimum, modification for the addition of a demister on the inlet and relocation to 241-S-112. At this point in the project, passive ventilation is assumed to be adequate, and is the baseline configuration.

3.6 TRANSFER PIPING

3.6.1 S-Farm Transfer Piping System

The existing underground transfer pipelines in the 241-S Farm complex have incurred numerous failures due to external corrosion between the pipeline and heat trace conduit (RPP-5825). Recent initiation of saltwell pumping efforts in S Farm brought the transfer line integrity concerns to the forefront. In spite of initial hydro-testing and annual testing of the 241-S Farm lines, the transfer line from 241-S-103 to 241-S-A Valve Pit, 3-inch supernatant line SN-219, resulted in a line failure and surface contamination pool. As a result of this failure and in conjunction with high failure rates of the other lines, an

administrative decision was reached by the Interim Stabilization program to no longer use any of the un-encased 241-S and 241-SX Farm transfer lines.

New temporary hose-in-hose transfer line, installed slightly below grade is being utilized by the Interim Stabilization Project to transfer the remaining pumpable liquids from the 241-S Complex, with the exception being 241-S-102, which has an encased pipe line connected to the 241-S-A Valve Pit.

A temporary hose has already been installed connecting the 241-S-A and 241-S-C Valve Pits. A line will be installed from the 241-S-C Valve Pit to the 241-S-12A Pump Pit prior to saltwell pumping scheduled for the second quarter of FY 2002. The service life of this temporary hose has been reduced from 7 (HNF-6711) to 3 years (HNF-6711 Rev. 1). The three year service life is currently being reviewed with hopes of extending the service life of the hose-in-hose installations up to 5 years. If the 3 year service life reduction is imposed, then the line connecting the existing hose-in-hose transfer line between 241-S-A and 241-S-C Valve Pits will exceed its service life prior to the completion of saltwell pumping in 241-S and 241-SX Farms, unless the accelerated saltwell pumping schedule is not maintained. The existing hose-in-hose transfer line between 241-S-C and 241-S-A Valve Pits was installed in April 2000 and first used to transfer waste in 6 June 2000. The existing three-year service life starts on the date of initial waste transfer; replacement of this hose section may be necessary to support 241-S-112 retrieval, if an alternative service life is not established. The current schedule for retrieval of 241-S-112 may extend beyond the life of the hose assembly yet to be installed between the 241-S-12A and 241-S-C pits. Coordination of the saltwell pumping and waste retrieval Project should be considered to eliminate this potentially redundant expenditure. For preliminary engineering purposes, it has been assumed that a compliant transfer route will be available from the 241-S-C Valve Pit to the 241-SY-02A Pump Pit. Annual hydro pressure testing, as well as an initial integrity (proof-of-flow) and pressure test will be required.

Interim Stabilization activities are scheduled to continue in 241-S Farm through February 2003. Activities are also planned for FY 2002 by Project W-314 to bypass the 244-S DCRT to support 222-S lab transfers to 241-SY Farm. The renegotiated TPA M-45 Milestones identify a second waste retrieval in 241-S Farm for 241-S-102. Operation of the 241-S-112 retrieval system is scheduled to overlap with the 241-S-102 construction activities. Project integration with all of these potentially interfering activities is warranted as the 241-S-112 retrieval project demonstration schedule is further developed.

Figure 3-6 and Figure 3-7 show details of the hose-in-hose transfer line cross-section and transition into a pit, respectively.

Figure 3-6: Hose-in-Hose Cross Section

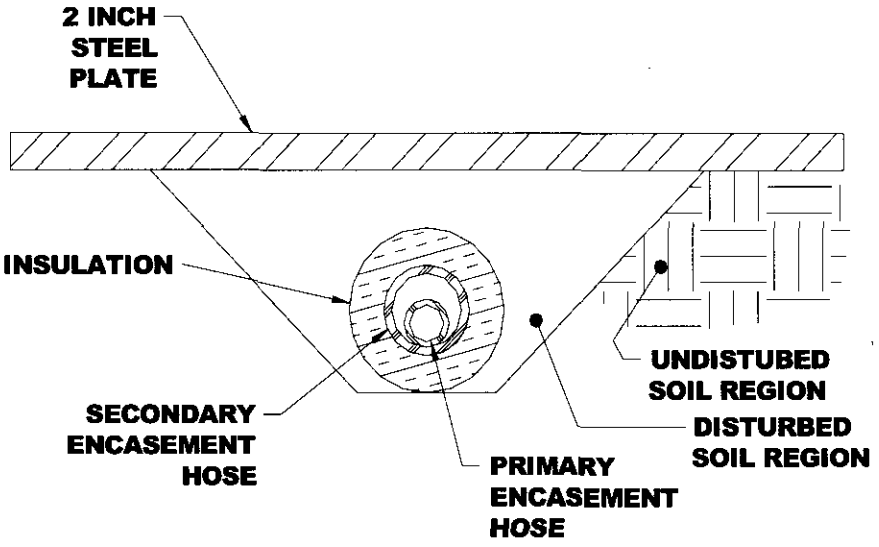

Figure 3-7: Hose-in-Hose Pit Entry Cross Section

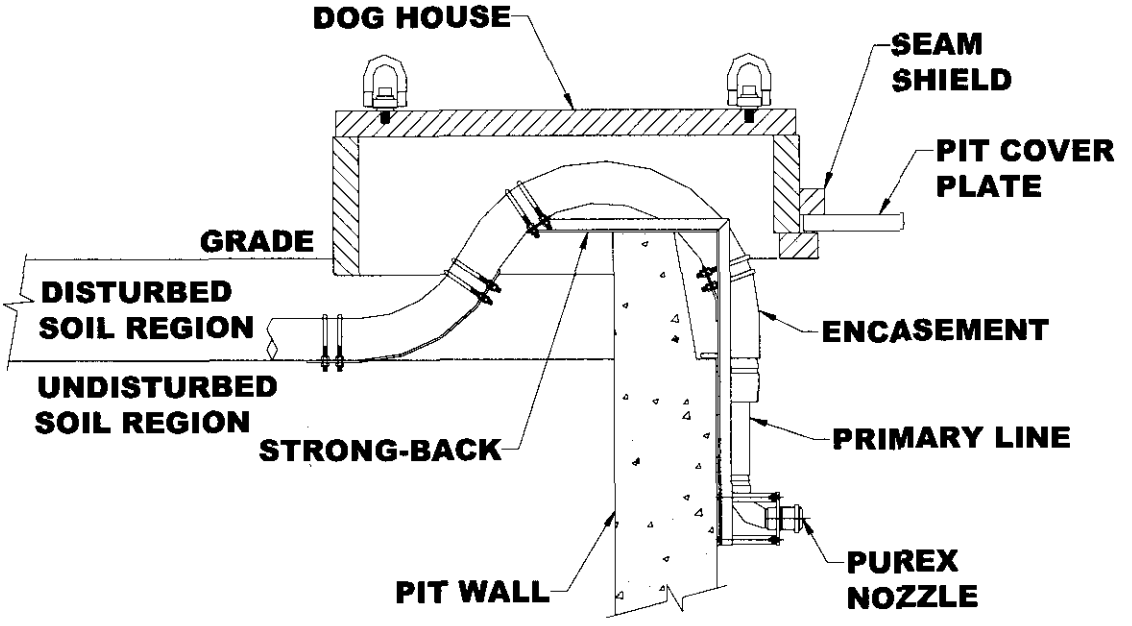

3.6.2 SY-Farm and Inter-Farm Piping

Two transfer lines installed during the 241-SY Farm construction connect the 241-SY-A and B Valve Pits to the 241-S-A & B Valve Pits. There is an existing 3-inch encased line (SN-275) between the 241-SY-A Valve Pit and the 241-S-A Valve Pit, and an existing 2-inch encased line (SL-177) between the 241-SY-02A Pump Pit and the 241-SY-A Valve Pit. Utilization of this route will capitalize on the existing lines installed by the Interim Stabilization Project and is preferred for this reason for the 241-S-112 retrieval demonstration.

The 241-SY Farm infrastructure is well maintained and operable. Waste is currently being received from Interim Stabilization saltwell pumping in 241-U Farm, 241-S Farm, and 241-SX Farm. Additionally, waste is routed through the 244-S DCRT from the 222-S Labs. All of the waste is currently directed into a 241-SY Farm staging tank for cross-site transfer. Retrieved waste from all of the 200 West Tank Farms will be directed to the 200 East DSTs for eventual treatment, immobilization and disposal.

The SY Farm transfer lines (SL-177 and SN-275) are suitable to support the retrieval of 241-S-112, however, these lines will no longer be compliant as of June 30, 2005, as the result of the existing encasements not extending into the pit structures. The TPA (December 1998) M-43 series of milestones requires that all waste transfer lines be fully

compliant by that time. This will require modification or replacement of all of the 241-SY Farm transfer lines. See Appendix I for the Department of Ecology's interpretation of the M-43 milestone series. These upgrades are included within the scope of Project W-211.

Several projects are anticipated to have activities within 241-SY Farm and 241-S Farm that could impact the configuration and availability of the transfer system. In particular, Projects W-521, W-525, and W-314 are scheduled to complete upgrades in the 241-SY-A Valve Pit. Project W-525 will also be completing activities in the 241-SY-02A Pump Pit. Project W-525 activities are not currently planned to be performed in the 241-S-A Valve Pit. Integrating the needs of the SST retrieval projects with the DST system and Tank Farm Upgrades is paramount for timely and cost effective utilization of the common architectures. Acceleration of the retrieval to coincide with the Interim Stabilization pumping schedule would eliminate most of the potential project conflicts. This issue is further discussed in Section 4.2.

This page intentionally left blank.

4.0 ASSUMPTIONS AND UNCERTAINTIES

4.1 ASSUMPTIONS

This section describes the assumptions that were made to enable development of the proposed LVDG demonstration. Each assumption is described, and the description is followed by a discussion of the sensitivity of the analysis if the assumption is invalid. Uncertainties associated with the proposed project are identified and described thereafter.

Assumption No. 1 – The SST selected for the saltcake dissolution retrieval demonstration, 241-S-112, is sound (i.e., non-leaking).
Sensitivity – A determination has been made that 241-S-112 is a sound tank (HNF-EP-0182-146). If this condition changes, then the engineering basis of the saltcake dissolution and retrieval method developed in this document is undermined and the cost and schedule estimates would be invalidated. The tank used for demonstration of saltcake dissolution retrieval using the process described herein must be sound.

Assumption No. 2 – The "benchmark" saltcake dissolution retrieval process described in this report is based, to the greatest extent practical, on a system configuration and operating process similar to that used for current Interim Stabilization salt well pumping operations.
Sensitivity – The pre-conceptual cost estimate and schedule are based largely upon the relevant salt well pumping data. Any changes to the assumed configuration or process will impact the estimated cost and schedule for the demonstration project. Development and engineering activities have taken credit of work already done within the Interim Stabilization Project.

Assumption No. 3 – The volume of waste transferred out of S-112 to meet program goals is assumed to be 1.8 Mgal (see Appendix C). This assumption is dependent upon dissolution ratios achieved during the removal process.
Sensitivity – The total volume of waste to be received by the DST system is dependant upon the dilution ratio required to achieve saltcake dissolution. Testing with actual waste to gain a further understanding of the dissolution retrieval process is needed during the conceptual design stage to verify the DST storage space requirements for the demonstration. Additionally, the overall retrieval duration and associated costs will be impacted by any changes to the resultant pumping volume.

Assumption No. 4 – Cross-site transfers from the recipient vessel will be made to accommodate the recovered volume. The receiver tank will initially be emptied to the greatest extent possible using existing equipment.
Sensitivity – The estimated DST space requirements for the recovery of 241-S-112 far exceeds the space available in any single Hanford DST. Complete recovery of the demonstration tank will require additional DST space beyond that available in any one 241-SY Farm staging tank. The baseline estimate and schedule assumes one or more cross-site transfers will occur during the retrieval process.

4.2 UNCERTAINTIES

4.2.1 241-SY Farm Staging Tank Space Availability

In retrieving 241-S-112 waste, approximately 1.8 Mgals of waste (see Appendix C) will be introduced into the DST system. Numerous potential issues arise, including space availability in 241-SY Farm receiving tanks, compatibility of the S-112 waste. Planning for the receipt of the waste into the DST system will have to be completed in the conceptual stage of design based on Hanford Tank Waste Operations Schedules (HTWOS) modeling.

The estimated 1.8 Mgal waste volume is a based on the current BBI and estimates for the required dilution. Tank S-112 has not been characterized by sampling and the estimates within the BBI are likely to change. Core sampling of the tank has recently been completed, however, the analytical results are not currently available to support this activity. The exact dilution requirements (if any) have yet to be determined. Using the Interim Stabilization generic operating approach of diluting one to one (1:1), based on CHG Process Engineering guidance was used as the baseline.

The space available in any of the 241-SY Farm staging tanks will not support the complete retrieval of S-112, even if the receiving tank is completely empty prior to pumping initiation. If 241-SY-102 is used to stage S-112 waste, its pre-transfer inventory cannot be reduced to below approximately 200-inches (approximately 500,000 gallons) due to limitations of its transfer pump. If tank 241-SY-101 is used to stage waste, its pre-transfer inventory can be reduced to approximately 250,000 gallons. It is less likely that tank 241-SY-103 will be used to stage the S-112 transfer waste, as gas retention issues would need to be treated prior to its use. It is clear that cross-site transfers from the staging tank(s) will be required to achieve S-112 Project goals, but performance of cross-site operations are not within the project scope.

4.2.2 Effects of Water Distribution System on Existing Hardware

The effects of the addition of the water distribution system on existing tank equipment requires consideration. The projection of water at ambient (ex-tank) temperature against the thermocouple tree will undoubtedly yield erroneous dome space temperatures. Waste channeling around the thermocouple tree may also yield erroneous tank waste temperatures. Additionally, the ENRAF, as a function of its design, cannot be operated in an environment where it could be impinged by the water from the distribution system. One potential solution is to install the ENRAF in the unused saltwell screen in Riser 5, following removal of the abandoned saltwell pump. This configuration will, however, provide redundant measurements, albeit more accurately, as the dip tubes installed in the same riser. Location of the ENRAF and effects on the thermocouple tree will have to be resolved during conceptual design.

4.2.3 Use of existing Saltwell Pumping Equipment

The design of the WRS is based on the design of current SST Interim Stabilization equipment. The current Interim Stabilization baseline schedule shows completion of the 241-S and 241-SX Farm complex prior to the initiation of the 241-S-112 dissolution

retrieval demonstration effort. Substantial project savings are possible if select Interim Stabilization equipment could be reused. A closer evaluation of hardware availability (and reliability) should be performed during subsequent stages of design. The estimate provided conservatively assumes the procurement of all new equipment.

The greatest efficiencies can be realized if the 241-S-112 Waste Retrieval Demonstration are integrated with the Interim Stabilization of the tank. Stabilization does not however, have the flexibility to extend the stabilization completion date for 241-S-112 beyond FY 2003. The Consent Decree dictates that all of the tanks be stabilized by that 2003. Project integration would require an acceleration of the retrieval activities and negotiation with the Interim Stabilization Project.

4.2.4 Interim Stabilization Schedule Conflict

The current Interim Stabilization baseline schedule forecasts completion of the 241-S and 241-SX Farm activities prior to the initiation of the 241-S-112 saltcake dissolution retrieval demonstration. Thus, there is no coordination problem between these activities at this time. However, in the event the Interim Stabilization activities are delayed, or the demonstration schedule is accelerated, the saltcake dissolution retrieval demonstration and interim stabilization project will have to coordinate engineering, construction and operations activities.

4.2.5 Project W-314 Schedule Conflict

Concerns over the design life of the 244-S DCRT have spurred the initiation of activities to bypass this interim staging vessel. The W-314 project will be conducting construction activities early in the dissolution retrieval demonstration project lifecycle. Thus, there is no coordination problem between these activities at this time. However, in the event the W-314 activities are delayed, or the demonstration schedule is accelerated, the saltcake dissolution retrieval demonstration and W-314 Project will have to coordinate engineering, construction and operations activities (see also Section 1.5).

4.2.6 Tank S-102 Initial Tank Retrieval Schedule Conflict

The renegotiated TPA M-45 milestones, M45-00-01A, establishes the schedule for both the 241-S-112 retrieval demonstration and 241-S-102 initial tank retrieval. The retrieval of 241-S-102 is scheduled for completion late FY 2006. Construction activities for this effort will overlap with the operation of the 241-S-112 WRS. If 241-SY-102 is used as a staging tank for the S-112 Project, it is likely that these two systems will require use of the same infrastructure and utility sources. Engineering activities for these projects should be closely coordinated to eliminate redundant efforts, overtaxing of the utilities, and resource integration.

4.2.7 Use of Existing Transfer Lines

The proposed routing for the transfer of 241-S-112 waste to 241-SY-A Valve Pit includes two existing encased transfer lines, 3-inch SN-275 and 2-inch SL-177. Both of these existing lines are considered to be non-compliant with applicable Washington Administrative Code (WAC) regulations concerning secondary containment of systems

containing hazardous waste (i.e., encasement piping does not penetrate pit walls, resulting in a potential leak path to the environment). Current Tri-Party Agreement requirements allow the non-compliant transfer lines to be operated until June 30, 2005, at which time all operational transfer systems are required to fully comply with the WAC regulations. The current schedule for completing the saltcake waste transfers shows completion of this activity after the expiration date for operation of non-compliant transfer systems (September 30, 2005).

The design life of the current hose-in-hose assemblies has been reduced from the initial 7 to 3 years (RPP-6711 Rev. 1). The full impacts of this determination have yet to be assessed. The OGT connecting the 241-S-A and 241-S-C Valve Pits was installed in the summer of 2000. The saltwell pumping of 241-S and 241-SX Farms are anticipated to extend beyond the 3-year installation and service anniversary. Efforts are underway to increase the design life from 3-years to 5-years. The outcome and final determination will have an impact on the preliminary cost and schedule provided in this report. The current assumption is that a compliant transfer route will exist from the 241-S-C Valve Pit to the 241-SY-02A Pump Pit.

4.2.8 SY Farm Upgrades Schedule Conflict

As discussed previously in Section 1.4.2 and 4.2.7, the 241-SY Farm transfer lines are noncompliant for waste transfers. The upgrade of these lines is planned around the time of the 241-S-112 demonstration project (by Project W-525). The current demonstration schedule leaves inadequate time to upgrade the lines after the demonstration. Additionally, Project W-314 is scheduled to decontaminate the 241-SY-A Valve Pit and add a liner to it. The current saltwell pumping transfer route is directed through this pit, Coordination of the construction activities are likely to impact the operations schedule. Upgrades are also planned by Projects W-211 and W-521, which will impact the routing and configuration of the jumpers in the 241-SY-A Valve Pit (see also Sections 4.2.4, 4.2.5, and 4.2.6).

4.2.9 Ventilation

A review of the preliminary design indicates that the amount of entrained moisture should be minimal. The nozzles direct spray downward and away from the point where the ventilation system withdraws air from the tank. If the POR-004 exhauster is utilized, the flow rate of air leaving the tank will be approximately 500 cfm; large droplets will likely fall out of suspension before the air reaches the ventilation system. Furthermore, it is anticipated the water distribution devices will be installed well below the elevation at which the ventilation system withdraws air. All of these factors reduce the likelihood that large amounts of entrained moisture will reach the ventilation system. Without appreciable amounts of entrained moisture, an exhauster will not be required for this demonstration, and passive ventilation will be the baseline system. It is possible however, that the 25% lower flammability limit for hydrogen could be reached, at which time an exhauster would be required.

If an exhauster is determined in the later project phase to be required then the re-use potential for the existing POR-004 exhauster should be made. While this existing system

should prove adequate for the retrieval campaign, the system lacks a de-entrainer or demister. This device is necessary if large amounts of entrained moisture (liquid droplets) are drawn into the system's filtration units.

A saltcake dissolution "proof-of-concept" is planned in 241-U-107. This test should be used to provide additional information regarding the aerosol generation issue, and an exhauster may be added to the S-112 Project baseline at a later date, if required.

4.2.10 Retrieval Transfer Rate

The current estimated retrieval duration of 6 months may be reduced if alternative pumping technologies and retrieval methods are identified and evaluated. The saltwell pumping system was designed to remove supernatant and interstitial liquid that enters the saltwell screen at relatively low rates, an ideal application for the LVDG retrieval demonstration. As the result of the saltwell pumping systems inability to transport solids and achieve high transfer flow rates a secondary pumping system or technology may be deployed in conjunction with the saltwell pumping system to achieve necessary waste volume removal and potentially improve upon the projected duration of the retrieval campaign by accelerating the retrieval transfer rate.

4.2.11 Dissolution Water Distribution

Even distribution of the dissolution water on the top of the waste is anticipated to be desirable in order to evenly saturate the salt with solvent and mitigate waste channeling. Even distribution of the dissolution water will be achieved by proper placement of the sprinklers within the tank. The risers available on 241-S-112 limit the possible installation locations for the water distribution system. Risers 11, 14, and 16 are selected to optimize the spacing over the tank surface. The ability to "evenly" distribute the water over the entire waste surface will have to be further analyzed during subsequent design phase. Furthermore, the assumption that the water should be evenly distributed should be validated prior to detailed design.

Additionally, a determination must be made on the operations of the solvent distribution system. To cover the required area, and not exceed the saltwell pump removal rate, it is unlikely that a 2 ½ to 3 gpm flow rate per sprinkler will be sufficient. This may require that only one, or two water distribution devices, operating at 8 to 10 gpm, be operable at a time. Data collected from the proof-of-concept testing performed in 241-U-107 should be used to mitigate this uncertainty.

4.2.12 Preferential Dissolution

As with any dissolution retrieval method, preferential dissolution is likely to occur to some extent. The corrosion inhibitors are likely to be retrieved first due to the high solubility of the nitrate and sodium hydroxide. This could potentially result in non-compliant waste pH. Further analysis and/or sampling will be required to estimate the affects, if any, that may be caused.

This issue may be further mitigated by the performance of laboratory testing to determine the dissolution behavior of the 241-S-112 waste. Testing of this nature can also resolve uncertainties about the dissolution ratio and specific volume of a saturated solution.

Preferential dissolution may also reduce the retrieval efficiency, as the waste volume gets low as is discussed in Section 4.2.13.

It is possible that sufficient volume of waste is recovered during the 241-U-107 proof-of-concept testing to observe this phenomenon. Preoperational sampling should be compared with post-demonstration sampling to determine the effects (if any) of preferential dissolution. The comparison of inline solution samples during the onset with those obtained near the conclusion of the demo may also be used to resolve or learn about these effects.

4.2.13 Retrieval Effectiveness

For the development of the WRS, 100% of the saltcake is assumed soluble; this is unlikely to be the case. The true effectiveness of this method to recover waste will not be determined until the completion of the Saltcake Dissolution Retrieval Demonstration effort. The anticipated reduction in retrieval efficiency, however, can be mitigated by solution recirculation as discussed previously in Section 3.1.3 and heating the dissolution water to accelerate dissolution. At this time, the preliminary engineering development and associated cost estimate assumes that the water supply will require heating to prevent inadvertent cooling of the tank waste due to dissolution's expected endothermic reaction; the warmer water will also help accelerate dissolution.

Waste "channeling" is likely to result in short circuiting where solvent flows easily and quickly to the transfer pump. Dissolution of the 241-S-112 salt waste will require some dwell time, that, as of now is indeterminate. The preliminary retrieval modeling performed for the development of this report does not take these effects into account. Additionally, as waste levels in 241-S-112 recede to near the level of the transfer pump, it is possible that the waste liquid pumped from the tank may not be saturated with dissolved salts. There may also be short-circuiting caused by relatively quick "overland" travel of the water to the pump. This effect may cause retrieval effectiveness to decline when the waste volume gets low. Again, there is no accurate method of estimating this effect until actual demonstration data are collected.

It is unlikely that sufficient waste will be recovered during the 241-U-107 proof-of-concept tests to witness this phenomenon. Nonetheless, visual observance of effects such as waste channeling and/or short-circuiting should be closely monitored and recorded.

4.2.14 Power Availability

The power for 241-S Farm is primarily supplied from three 50 kVA pole-mounted transformers (C68486P, C68487P, and C68488P). These three transformers supply power for several other loads, as well. Tank Farm Utilities has initiated a survey to determine the capacity factors for these transformers in accordance with the National Electric Code. It is anticipated that this survey will demonstrate adequate power is

available for the options considered in this report. Calculation 4412-470-ECAL-001 in Appendix C) also supports the conclusion that these transformers are adequate for project needs.

4.2.15 Estimating the 241-S-112 Liquid Inventory / Leak Detection

The accuracy and performance of the volumetric mass balancing method of leak detection is a function of the accuracy of the liquid inventory estimates. It has been assumed that an accurate liquid inventory estimate can be obtained by measuring the liquid level at only two points. Inaccuracies associated with the ILL model and the waste porosity estimate may exceed the system accuracy requirements. This uncertainty will require some performance evaluation testing to bound the scope of the issue. Without the 241-S-112 RPE complete the accuracy and performance requirements of the volumetric balancing (leak detection) are indeterminate. The possibility exists that current technology will not measure the required leak size with the required accuracy.

4.2.16 Tank S-112 Waste Volume and Condition

Interim Stabilization will be performing saltwell pumping of this tank in FY 2002. The configuration of the equipment on the tank has yet to be determined. Decommissioning, decontamination, and disposal activities are likely to be required to make use of the limited space and riser availability. These additional activities will not be well defined until the later stages of the project.

The values used for the development of the retrieval volumes and durations are based on the current waste volumes reported in the BBI. These values should be conservative considering that the Interim Stabilization Project will be removing significant quantities of liquid prior to the retrieval demonstration operations.

4.2.17 Safety Classification of Structures, Systems and Components

The pre-conceptual cost estimate and schedule for the saltcake dissolution retrieval demonstration are based on the preliminary engineering information presented in this report. This engineering basis includes utilization of equipment currently covered by an existing AB to support SST saltwell pumping activities. Any changes to the current AB, such as change to the safety classification of a significant component or system utilized to support the dissolution retrieval effort, could impact the estimated cost and schedule for this project. The AB will be assessed for impacts from the proposed demonstration project during the conceptual design phase. A detailed analysis of SSC safety classifications will also be performed to support detailed project planning.

4.2.18 Regulatory Issues

The addition of water to any of the SSTs should be carefully planned and minimized as a best management practice. The State of Washington Dangerous Waste Regulations (Washington Administrative Code 173-303) do not preclude the addition of water for the purpose of retrieving tank waste in support of tank cleanout and closure; however, prudent use of water will minimize the potential for contaminants to be carried into the environment in the event tank integrity is not maintained. The Washington State

Department of Ecology (Ecology) should be appraised at an early stage of project development of any plans to use water for the dissolution retrieval demonstration, along with the intended steps to minimize the liquid volume and optimize waste removal. Ecology staff personnel do not have to specifically approve the addition of water for waste retrieval, but they will approve the overall methodology for cleanup and eventual closure of the tank. Tank S-112 is neither known nor suspected to have leaked in the past, so Ecology should not object to the addition of dissolution water in support of the dissolution technology demonstration and expeditious cleanup and closure.

4.2.19 Leak Detection Performance Criteria

The leak detection performance requirements are established in the 241-S-112 TPA F&R (RPP-7825), which includes the Retrieval Performance Evaluation (RPE) for S-112. The requirements identified in the final TPA F&R will be approved by the TPA stakeholders. The requirements laid forth in the TPA F&R in conjunction with the output of the RPE will be used to develop and finalize the integrated retrieval strategy, which accounts for the minimization of environmental risk. It is anticipated this will be accomplished primarily through mitigation of the potential likelihood of a leak occurring during retrieval. This will include the acceleration of retrieval operations, reduction of liquid inventory in the tank, and measures to prevent actions that may cause a leak

4.2.20 Closure

The 241-S-112 BBI estimates the tank to contain 6,000 gallons of sludge. This waste is not anticipated to be soluble and as such, is expected to remain following completion of the demonstration. Additional insoluble salts are likely to remain, as well. Tri-Party Agreement milestone M45-03C states the goal of the demonstration should be 99% recovery of the tank volume. At this time it is not likely that this "goal" can be achieved even assuming 100% retrieval efficiencies are observed for strictly the dissolvable saltcake waste inventory. Closure, however, while not included within the scope of this demonstration should be a consideration during the project development. The existing design of the saltwell pumping system is to exclude pumping solids. As the result of the saltwell pumping systems inability to transport solids a secondary pumping system or technology may be deployed in conjunction with the saltwell pumping system to achieve necessary waste volume removal.

This page intentionally left blank.

5.0 COST & SCHEDULE

5.1 WORK BREAKDOWN STRUCTURE

A preliminary Work Breakdown Structure (WBS) and cost estimate for 241-S-112 saltcake dissolution retrieval demonstration is provided in Appendix A. The WBS provides a deliverable-oriented grouping of scope elements that organizes and defines the total scope of the demonstration project. Work not identified in this WBS is considered outside the scope of the project.

5.2 PLANNING BASIS AND ASSUMPTIONS

The WBS and cost estimate has been developed for the scope of work defined in this Preliminary Engineering Report for the 241-S-112 dissolution retrieval demonstration project. The discussion below presents the approach used to develop the cost estimate. The project WBS identifies the project elements that require resources, thus the WBS is the primary input to the cost estimate.

5.3 COST ESTIMATE

The pre-conceptual cost estimate developed to support planning of the 241-S-112 dissolution retrieval demonstration is presented in Appendix A of this report. The total project cost for this project is estimated to be $32.5 million, including escalation.

5.3.1 Cost Estimate Basis

A description of the technical scope of work is found in the Section 2.0 of the engineering report. This cost estimate has been prepared primarily using:

- Similar work from SST Interim Stabilization Project (i.e., saltwell pumping),
- Vendor estimates, and
- Historical factors and percentages from previous projects at Hanford.

5.3.2 Estimate Purpose

The estimate is a pre-conceptual cost estimate developed from design information contained in the Preliminary Engineering Report for 241-S-112 dissolution retrieval demonstration and other relevant project documentation. This estimate is intended to identify the cost of resources required to complete the project activities and establish the planning basis for the out-year costs associated with the demonstration of saltcake dissolution retrieval in 241-S-112.

5.3.3 Estimate Organization

This cost estimate is organized in accordance with the 241-S-112 saltcake dissolution retrieval demonstration project WBS.

5.3.4 Escalation

Information regarding escalation was obtained from the following sources:

- U.S. Department of Energy Office of Environmental Management, "Accelerating Cleanup: Paths to Closure," Attachment D. Project Baseline Summary Format and Instructions, dated April 1998.
- U.S. Department of Commerce, "Energy Price Indices and Discount Factors for Life-Cycle Cost Analysis," NISTIR 85-3273-14r, dated April 1999.

The Department of Energy source quoted an annual escalation rate of 2.7% and the Department of Commerce source quoted annual escalation rates of between 2.7% and 3.1%. Based on this information, an annual escalation rate of 3.0% was used for this cost estimate.

5.3.5 Contingency

Contingency was evaluated and calculated based on consideration of the following definition provided by the Department of Energy (DOE). "Contingency" covers costs that may result from incomplete design, unforeseen and unpredictable conditions, or uncertainties within the defined project scope. The amount of contingency will depend on the status of design, procurement, construction, and the complexity and uncertainties of the component parts of the project. Contingency levels have been established based upon study-level engineering evaluations of relatively well understood technologies and processes. A contingency analysis is provided as a part of the cost estimate in Appendix A of this report.

5.3.6 Rounding

The project cost summary report is summarized and adjusted/rounded as follows. The escalated total costs, contingency total costs, and the total dollar costs are adjusted/ rounded to the nearest $10,000. The total project cost is adjusted/rounded to the nearest $100,000.

5.4 SCHEDULE

Tank S-112 dissolution retrieval demonstration schedule requirements are specified in the Multi-Year Work Plan and summarized on the mission summary diagram. Pre-conceptual planning efforts for each of these activities indicates that these schedule requirements are easily achievable. As design activities progress, schedule difficulties may arise, but none are evident at this time. The schedule is organized in accordance with the WBS for the 241-S-112 saltcake dissolution retrieval demonstration project and identifies the summary-level activities required to produce the deliverables identified within the Preliminary Engineering Report. The pre-conceptual project schedule for the 241-S-112 saltcake dissolution retrieval demonstration project is included in Appendix A of this report. This schedule was developed to support the TPA milestones associated with the 241-S-112 Saltcake Dissolution Retrieval Demonstration listed in Table 5-1.

Table 5-1 TPA Milestones

Milestone	Activity	Completion Date
M-45-03C	Complete full scale saltcake waste retrieval technology demonstration at single-shell tank S-112	9/30/2005
M-45-03-T03	Complete S-112 saltcake waste retrieval technology demonstration functions and requirements document	12/30/2001
M-45-03D	Complete S-112 saltcake waste retrieval technology demonstration design	5/31/2003
M-45-03E	Complete S-112 saltcake waste retrieval technology demonstration construction	9/30/2004

This page intentionally left blank.

6.0 REFERENCES

HNF-EP-0182-146, *Waste Tank Summary Report for Month Ending May 31, 2000*, Hanlon, B.M., CH2MHill Hanford Group, Richland, Washington, 2000.

HNF-SD-WM-MAR-008, *Tank Waste Remediation System Mission Analysis Report*, Revision 3, Lockheed Martin Hanford Corporation, Richland, Washington, 1998.

HNF-SD-WM-SAR-067, *Tank Waste Remediation System Final Safety Analysis Report*, Revision 1L, Lockheed Martin Hanford Corporation, Richland, Washington, 1998.

HNF-3018, *Single-Shell Tank Sluicing History and Failure Frequency.* Rev. 0. Vista Research, Inc. for Lockheed Martin Hanford Corporation, Richland, Washington, 1998.

HNF-3554, *Investigation of Low Volume Density Gradient (LVDG) for Waste Recovery in Hanford's Single-Shell Tanks*, Hertzel, J.S., Numatec Hanford Corporation, Richland, Washington, 1998.

PNNL 1999. *Partitioning Tracers for Leak Detection During Waste Retrieval Operations*. Condensed version of EMSP proposal, Gauglitz, Phillip A., et al. al., Pacific Northwest National Laboratory, Richland, Washington, April 1999.

RPP-5825, *Technical Evaluation of 3"SN-219 Failure and S/SX Tank Farms Saltwell Piping,* Revision 0, CH2M Hill Hanford Group, Richland, Washington, 2000.

RPP-6711, *Evaluation of Hose-in-Hose Transfer Line Service for Hanford's Interim Stabilization Program*, Revision 0, CH2MHill Hanford Group, Richland, Washington, 2000.

RPP-6711, *Evaluation of Hose-in-Hose Transfer Line Service for Hanford's Interim Stabilization Program*, Revision 1, CH2MHill Hanford Group, Richland, Washington, 2001.

RPP-6797 (Draft), *Leak Detection, Monitoring, and Mitigation Design Concepts Evaluation Report for Saltcake Dissolution Based Retrieval Technologies*, CH2MHill Hanford Group, Richland, Washington

RPP-6821, *Technology Evaluation Report for Saltcake Dissolution Retrieval Demonstration,* Revision 0, CH2M Hill Hanford Group, Richland, Washington, 2000.

RPP-6883, *Evaluation of Failed Crane Chempumps Used During Saltwell Pumping,* Revision 0, CH2M Hill Hanford Group, Richland, Washington, 2000.

RPP-7010, *Test Objectives for the Saltcake Dissolution Retrieval Demonstration*, Revision 0, CH2MHill Hanford Group, Richland, Washington, 2000.

RPP-7087, *Single-Shell Tank Retrieval Sequence: Fiscal Year 2000 Update,* Revision 0, CH2M Hill Hanford Group, Richland, Washington, 2000.

RPP-7596 (Draft), *241-S-112 Tank Waste Retrieval System Environmental Permit and Approval Plan,* CH2M Hill Hanford Group, Richland, Washington.

RPP-7598, *Functions and Requirements for Tank 241-S-112 Waste Retrieval System,* Rev. 0, CH2M Hill Hanford Group, Richland, Washington.

RPP-7825, *Single-Shell Tank S-112 Full-Scale Saltcake Waste Retrieval Technology Demonstration Functions and Requirements,*Rev. 0, CH2M Hill Hanford Group, Richland, Washington, 2001.

RPP-8476, *Ex-tank Leak Detection and Leak Monitoring Technologies for Test Specification for FY 2001 Demonstration,* CH2M Hill Hanford Group, Richland, Washington.

RPP-8725, *Letter Report for the S-112 Waste Retrieval Technology Demonstration Validation of Alternative Technologies,* Revision 0, CH2M Hill Hanford Group, Richland, Washington, 2001.

U.S. DOC, 1999, *Energy Price Indices and Discount Factors for Life-Cycle Cost Analysis*, U.S. Department of Commerce, NISTIR 85-3273-14r, dated April 1999.

U.S. DOE, 1998, *Accelerating Cleanup: Paths to Closure, Attachment D. Project Baseline Summary Format and Instructions*, U.S. Department of Energy Office of Environmental Management, dated April 1998.

Appendix A
Cost Estimate, Schedule, and Work Breakdown Structure

This page intentionally left blank.

Figure A-1
Project S-112 Saltcake Waste Retrieval Technology Demonstration Project
Work Breakdown Structure

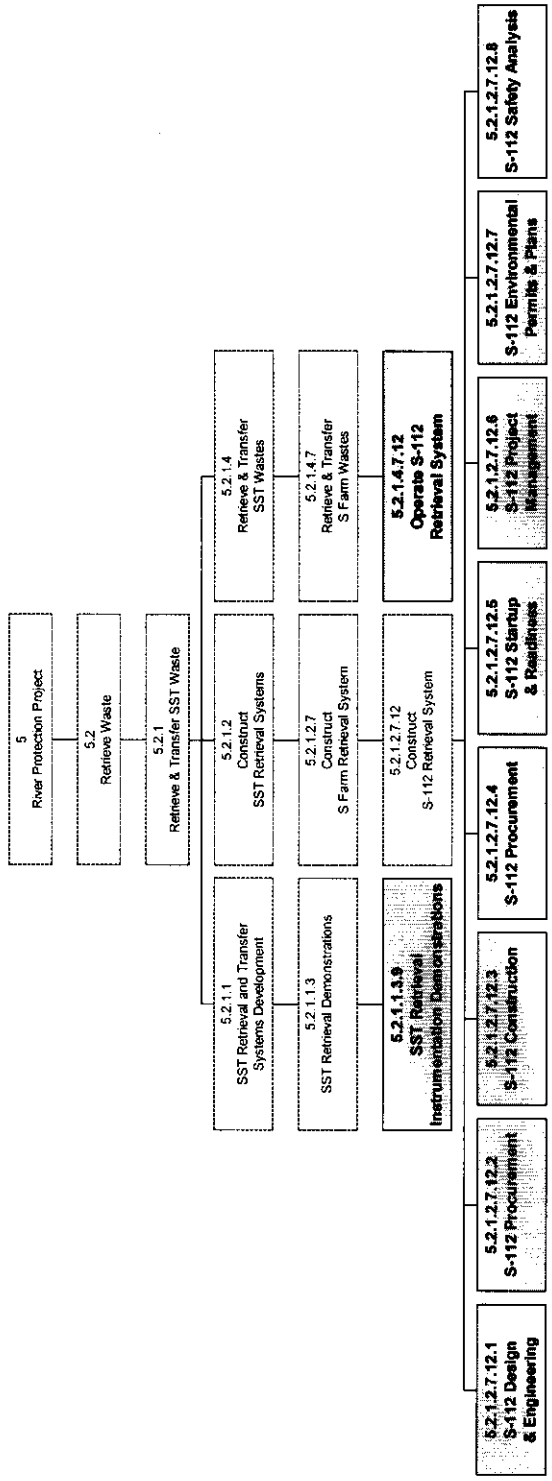

S -112 SALTCAKE WASTE RETRIEVAL TECHNOLOGY DEMONSTRATION PROJECT
ESTIMATE SUMMARY REPORT

WBS NUMBER	WBS TITLE	ESTIMATE
5.02.01.01.03.09	S-112 Retrieval Instrumentation Demonstration	$4,388,897
5.02.01.02.07.12.01	S-112 Design and Engineering	$6,115,206 *
5.02.01.02.07.12.02	S-112 Procurement	$3,828,797
5.02.01.02.07.12.03	S-112 Construction	$4,076,037
5.02.01.02.07.12.04	S-112 Testing	$2,194,210
5.02.01.02.07.12.05	S-112 Startup and Readiness	$682,709
5.02.01.02.07.12.06	S-112 Project Management	$1,471,928 *
5.02.01.02.07.12.07	S-112 Environmental Permits and Plans	$109,623
5.02.01.02.07.12.08	S-112 Safety Analysis	$183,186
5.02.01.02.07.12.09	Develop S-112 F&R Document	$482,352 *
5.02.01.04.07.12	Operate S-112 Retrieval System	$4,837,771
	SUBTOTAL S-112	$28,370,716
5.02.01.02.07.12.06	Contingency @ 10% of ETC	$2,687,940
	SUBTOTAL S-112 w/contingency	$31,058,656
	Escalation @ 4.94%** of ETC	$1,461,041
	TOTAL S-112 ESTIMATE	**$32,519,697**

* includes FY01 actual costs of $ 1082.8K; $379.8K; and $287K respectively for a total of $1,491.3K
** based on 2.1% escalation compounded annually

Approval Signatures:

CHG Estimator	12/12/01
CHG Estimating Manager	12/12/01
CHG S-112 Project Manager	12/12/01

Activity Information - Detail

5.02.01.01.0 Retrieval Instrumentation Demonstration

Summary

Activity ID	Activity Title	Cost
03.09.01	Develop, Install, and Operate a TMS System	$998,673.12
03.09.02	Develop, Install, and Operate a Densimeter in S-112	$534,273.12
03.09.03	Develop, Install, and Operate a RAMAN Speciation System	$498,673.12
03.09.04	Develop, Install, and Operate a Radionuclide Monitoring System	$758,673.12
03.09.05	Perform In Process Tank Grab Samples	$667,605.48
03.09.06	PNNL Perform Saltcake Runoff Experiments	$180,000.00
03.09.07	Provide Support for Testing and Operation of Instrumentation	$750,998.88

Summary for 'TBR' = 5.02.01.01.03.09 (7 detail records)

Sum *$4,388,896.84*

Cost Estimating Input Sheet

Task Title:	Develop, Install, and Operate a TMS System	Revision Number:	a
Schedule ID:	03.09.01	WBS Number:	5.02.01.01.03.09
Activity Owner:	SST Retrieval	PBS Number:	
Prepared By:	JR Biggs/AREngelman		

1.0 Scope Description

The scope of this task is for PNNL to develop the 2nd Generation TMS System, Install the system in tank S-112 and Operation of the System during Saltcake Dissolution activities.

The sub-tasks include:
1) TMS System development
2) Preparation for installation in the tank (Including Work Planning)
3) System Installation (Tank Intrusive entry)
4) Demobilization of equipment
5) Work Package Closeout
6) TMS System Operation

Operations activities are estimated at 4 hours per week for a 25 week duration. PNNL support may be required on a higher frequency to download and evaluate data.

2.0 Assumptions, Exclusions, and Qualifications

A - Current standard practices for rad con and industrial heatlth & safety remains unchanged
A - All work will be accomplished by personnel who are familiar with Tank Farm systems and equipment.
A - A COG Engineer dedicated to the installation will be provided.
A - Pit entries will be required.
A - Major events such as: radiation release, exhauster shut down or ammonia gas release are not anticipated.

3.0 Basis of Estimate

Estimates are based on historical experience for similar past tank farm work in the interim stabilization program. Where applicable Lessons Learned and actual costs from the installation of other field equipment have been incorporated into estimates and planning. Where applicable Lessons Learned from the installation of the transfer system in Tank AW-104 have been incorporated in to estimates and planning.

4.0 Estimate Strategy and Method

Preliminary/Analogy

5.0 Legal Drivers/Reference Documents

Tri-Party Agreement Milestone M-45-03C, "Complete Full Scale Saltcake Waste Retrieval Technology Demonstration at S-112"
DOE Order 413.3, Program and Project Management for the Acquisition of Capital Assets,

RPP-7526, Preliminary Engineering Report for the 241-S-112 Retrieval System

RPP-8791, PRELIMINARY PROJECT EXECUTION PLAN FOR TANK 241-S-112 SALTCAKE WASTE RETRIEVAL TECHNOLOGY DEMONSTRATION

RPP-7825, Single-Shell Tank S-112 Full Scale Saltcake Waste Retrieval technology Demonstration Functions and Requirements

Retrieval Instrumentation Demonstration

Cost Estimating Input Sheet

Task Title:	Develop, Install, and Operate a TMS System	Revision Number:	a
Schedule Code:	03.09.01	WBS Number:	5.02.01.01.03.09
Activity Name:	SST Retrieval	PBS Number:	
Prepared By:	JR Biggs/AREngelman		

P3 Activity	Sub Task	P3 Res Code	ResourceType	Fiscal Year	SubtaskDescription	Org Code	Seq Num	COA	Note Ref	Budget Qty	Qty Type	Total Qty
TT28305DA	1	3DL	RPP/CH2M Other Hanford Contractors	2002	PNNL Develop 2nd generation TMS System	7T300		B000	4	800.00	$K	800,000.00
TT28305DA	2A	3PL	RPP/CH2M PHMC Support to RPP	2003	Work Package and EWP Equipment Removal	7T300		D000	2,3	6.50	$K	6,500.00
TT28305DA	2A	LC02B	RPP/CH2M - Electricians	2003	Work Package and EWP Equipment Removal	7T300		D000		8.00	HRS	336.48
TT28305DA	2A	LC08B	RPP/CH2M - Plumbers & Pipefitters	2003	Work Package and EWP Equipment Removal	7T300		D000		8.00	HRS	316.16
TT28305DA	2A	LE01E	RPP/CH2M - Chemical Engineers	2003	Work Package and EWP Equipment Removal	7T300		D000		8.00	HRS	453.44
TT28305DA	2A	LE05E	RPP/CH2M - Environmental Engineers	2003	Work Package and EWP Equipment Removal	7T300		D000		8.00	HRS	390.56
TT28305DA	2A	LE11E	RPP/CH2M - Quality Control Engrs	2003	Work Package and EWP Equipment Removal	7T300		D000		8.00	HRS	408.96
TT28305DA	2A	LE12E	RPP/CH2M - Safety Engineers	2003	Work Package and EWP Equipment Removal	7T300		D000		8.00	HRS	391.60
TT28305DA	2A	LG03B	RPP/CH2M - Office Clks(Specialized)	2003	Work Package and EWP Equipment Removal	7T300		D000		12.00	HRS	400.08
TT28305DA	2A	LM01E	RPP/CH2M - First Line Supervisors	2003	Work Package and EWP Equipment Removal	7T300		D000		8.00	HRS	376.56
TT28305DA	2A	LM02E	RPP/CH2M - Managers & Executives	2003	Work Package and EWP Equipment Removal	7T300		D000		8.00	HRS	551.92
TT28305DA	2A	LP07E	RPP/CH2M - Planner/Sched/Estimators	2003	Work Package and EWP Equipment Removal	7T300		D000		40.00	HRS	1,736.00
TT28305DA	2A	LP08E	RPP/CH2M - Health Physicists	2003	Work Package and EWP Equipment Removal	7T300		D000		8.00	HRS	399.92
TT28305DA	2A	LR05B	RPP/CH2M - Nuclear Waste Process Ops	2003	Work Package and EWP Equipment Removal	7T300		D000		8.00	HRS	337.28
TT28305DA	2A	LT05B	RPP/CH2M - Health Physics Techs	2003	Work Package and EWP Equipment Removal	7T300		D000		8.00	HRS	317.68
TT28305DA	2B	3PL	RPP/CH2M PHMC Support to RPP	2003	Equipment Staging	7T300		D000	2,3	6.50	$K	6,500.00
TT28305DA	2B	LC02B	RPP/CH2M - Electricians	2003	Equipment Staging (2 ea)	7T300		D000	2	38.00	HRS	1,598.28
TT28305DA	2B	LC08B	RPP/CH2M - Plumbers & Pipefitters	2003	Equipment Staging (2 ea)	7T300		D000	2	38.00	HRS	1,501.76
TT28305DA	2B	LE01E	RPP/CH2M - Chemical Engineers	2003	Equipment Staging (1 ea)	7T300		D000	2	19.00	HRS	1,076.92
TT28305DA	2B	LM01E	RPP/CH2M - First Line Supervisors	2003	Equipment Staging PIC (1 ea)	7T300		D000	2	19.00	HRS	894.33
TT28305DA	2B	LR05B	RPP/CH2M - Nuclear Waste Process Ops	2003	Equipment Staging (4 ea)	7T300		D000	2	77.00	HRS	3,246.32
TT28305DA	2B	LT05B	RPP/CH2M - Health Physics Techs	2003	Equipment Staging (2 ea)	7T300		D000	2	38.00	HRS	1,508.98
TT28305DA	2B	LT06B	RPP/CH2M - In Health/Safety Tech	2003	Equipment Staging (1 ea)	7T300		D000	2	10.00	HRS	398.50
TT28305DA	3	10L	RPP/CH2M Material & Equipment	2003	Consumables	7T300		D000	1	10.00	$K	10,000.00
TT28305DA	3	3PL	RPP/CH2M PHMC Support to RPP	2003	Equipment Installation	7T300		D000	2,3	6.50	$K	6,500.00
TT28305DA	3	LC02B	RPP/CH2M - Electricians	2003	Equipment Installation (2 ea)	7T300		D000	2	38.00	HRS	1,598.28

Retrieval Instrumentation Demonstration

Cost Estimating Input Sheet

Task Title	Develop, Install, and Operate a TMS System	Revision Number	a
Sched Activity	03.09.01	WBS Number	5.02.01.01.03.09
Activity Desc	SST Retrieval	PBS Task No.	
Prepared By	JR Biggs/AREngelman		

P3 Activity	Sub Task	P3 Res Code	ResourceType	Fiscal Year	SubtaskDescription	Org Code	Seq Num	COA	Note Ref	Budget Qty	Qty Type	Total Qty
TT28305DA	3	LC08B	RPP/CH2M - Plumbers & Pipefitters	2003	Equipment Installation (2 ea)	7T300		D000	2	38.00	HRS	1,501.76
TT28305DA	3	LE01E	RPP/CH2M - Chemical Engineers	2003	Equipment Installation (1 ea)	7T300		D000	2	19.00	HRS	1,076.92
TT28305DA	3	LM01E	RPP/CH2M - First Line Supervisors	2003	Equipment Insallation PIC (2 ea)	7T300		D000	2	38.00	HRS	1,788.66
TT28305DA	3	LR05B	RPP/CH2M - Nuclear Waste Process Ops	2003	Equipment Installation (6 ea)	7T300		D000	2	115.00	HRS	4,848.40
TT28305DA	3	LT05B	RPP/CH2M - Health Physics Techs	2003	Equipment Installation (4 ea)	7T300		D000	2	77.00	HRS	3,057.67
TT28305DA	3	LT06B	RPP/CH2M - In Health/Safety Tech	2003	Equipment Installation (1 ea)	7T300		D000	2	10.00	HRS	398.50
TT28305DA	4	3PL	RPP/CH2M PHMC Support to RPP	2003	Equipment Demobilization	7T300		D000	2,3	6.50	$K	6,500.00
TT28305DA	4	LC02B	RPP/CH2M - Electricians	2003	Equipment Demobilization	7T300		D000	2	10.00	HRS	420.60
TT28305DA	4	LC08B	RPP/CH2M - Plumbers & Pipefitters	2003	Equipment Demobilization	7T300		D000	2	10.00	HRS	395.20
TT28305DA	4	LM01E	RPP/CH2M - First Line Supervisors	2003	Equipment Demobilization	7T300		D000	2	19.00	HRS	894.33
TT28305DA	4	LR05B	RPP/CH2M - Nuclear Waste Process Ops	2003	Equipment Demobilization	7T300		D000	2	38.00	HRS	1,602.08
TT28305DA	4	LT05B	RPP/CH2M - Health Physics Techs	2003	Equipment Demobilization	7T300		D000	2	19.00	HRS	754.49
TT28305DA	5	LE05E	RPP/CH2M - Environmental Engineers	2003	Work Package Closeout	7T300		D000	2	10.00	HRS	488.20
TT28305DA	5	LE11E	RPP/CH2M - Quality Control Engrs	2003	Work Package Closeout	7T300		D000	2	10.00	HRS	511.20
TT28305DA	5	LE12E	RPP/CH2M - Safety Engineers	2003	Work Package Closeout	7T300		D000	2	10.00	HRS	489.50
TT28305DA	5	LG03B	RPP/CH2M - Office Clks(Specialized)	2003	Work Package Closeout	7T300		D000	2	10.00	HRS	333.40
TT28305DA	5	LM01E	RPP/CH2M - First Line Supervisors	2003	Work Package Closeout	7T300		D000	2	10.00	HRS	470.70
TT28305DA	5	LM02E	RPP/CH2M - Managers & Executives	2003	Work Package Closeout	7T300		D000	2	10.00	HRS	689.90
TT28305DA	5	LP07E	RPP/CH2M - Planner/Sched/Estimators	2003	Work Package Closeout	7T300		D000	2	19.00	HRS	824.60
TT28305DA	5	LP08E	RPP/CH2M - Health Physicists	2003	Work Package Closeout	7T300		D000	2	10.00	HRS	499.90
TT28305DA	5	LR05B	RPP/CH2M - Nuclear Waste Process Ops	2003	Work Package Closeout	7T300		D000	2	10.00	HRS	421.60
TT28305DA	5	LT05B	RPP/CH2M - Health Physics Techs	2003	Work Package Closeout	7T300		D000	2	10.00	HRS	397.10
TT28305DA	6	3DL	RPP/CH2M Other Hanford Contractors	2005	PNNL Support Operation of TMS System	7T300		B000		100.00	$K	100,000.00
TT28305DA	6	LE01E	RPP/CH2M - Chemical Engineers	2005	Equipment Operation (1 ea)	7T300		EA00	2	120.00	HRS	6,801.60
TT28305DA	6	LM01E	RPP/CH2M - First Line Supervisors	2005	Equipment Operation (1 ea)	7T300		EA00	2	120.00	HRS	5,648.40
TT28305DA	6	LR05B	RPP/CH2M - Nuclear Waste Process Ops	2005	Equipment Operation (2 ea)	7T300		EA00	2	240.00	HRS	10,118.40

Cost Estimating Input Sheet

Task Title	Develop, Install, and Operate a TMS System	Revision Number	a
Sheet Number	03.09.01	WBS Number	5.02.01.01.03.09
Activity Name	SST Retrieval	PBS Number	
Prepared By	JR Biggs/AREngelman		

Notes

1. Consumables such as the pump containment sleeve, plastic sheeting, tape, containments, disposal containers, and waste bags are included in this figure.

2. All labor hours have been increased by 20% to account for unexpected occurances such as weather and resource availability, based on Interim Stabilization experience. Hours include pre and post job activity including pre-job briefings and dress/undress as applicable.

3. The crane crew consists of the following personnel and equipment:
Rates are based on the FY01 published site indirect pool rates
1 - Management PIC (Person in Charge) ($130/hr)
1 - Teamster - Heavy Load Truck Driver ($81/hr)
1 - Operator - Crane Operator ($81/hr)
4 - Ironworker/Riggers - Rig pump for lifting, flag crane operator, etc ($324/hr)
1 - 33T Crane/truck/trailer - ($500/day or $55.56/hr.)
Therefore:
The total Crane and Rigging Crew Hourly Rate = $672/hr rounded
Daily rate = 8 hrs X $672 = $5,376

4. PNNL Develpment costs consist of $250K for System Materials, $250K for Spares, and approx. 3200 MH @ $110/HR= $350K for a total of $800K.

Cost Estimating Input Sheet

Task Title	Develop, Install, and Operate a Densimeter in S-112	Revision Number	a
Code	03.09.02	WBS Number	5.02.01.01.03.09
Activity	SST Retrieval	FBS Number	
Prepared by	JR Biggs/AREngelman		

1.0 Task Description

The scope of this task is to develop the 2nd Generation Densimeter System, Install the system in tank S-112 and Operation of the System during Saltcake Dissolution activities.

The sub-tasks include:
1) Densimeter II System development
2) Preparation for installation in the tank (Including Work Planning)
3) System Installation (Tank Intrusive entry)
4) Demobilization of equipment
5) Work Package Closeout
6) Densimeter System Operation/Support

Operations activities are limited to support of PNNL for calibration. This support is estimated at one shift on alternate weeks for the 25 week duration. PNNL support may be required on a higher frequency to download and evaluate data.

2.0 Estimating Assumptions and Exclusions

A - Current standard practices for rad con and industrial heatlth & safety remains unchanged
A - All work will be accomplished by personnel who are familiar with Tank Farm systems and equipment.
A - A COG Engineer dedicated to the installation will be provided.
A - Pit entries will be required.
A - Major events such as: radiation release, exhauster shut down or ammonia gas release are not anticipated.

3.0 Basis of Estimate

Estimates are based on historical experience for similar past tank farm work in the interim stabilization program. Where applicable Lessons Learned and actual costs from the installation of other field equipment have been incorporated into estimates and planning. Where applicable Lessons Learned from the installation of the transfer system in Tank AW-104 have been incorporated in to estimates and planning.

4.0 Estimate Status and Method

Preliminary/Analogy

5.0 Legal Drivers/Reference Documents

Tri-Party Agreement Milestone M-45-03C, "Complete Full Scale Saltcake Waste Retrieval Technology Demonstration at S-112"
DOE Order 413.3, Program and Project Management for the Acquisition of Capital Assets,

RPP-7526, Preliminary Engineering Report for the 241-S-112 Retrieval System

RPP-8791, PRELIMINARY PROJECT EXECUTION PLAN FOR TANK 241-S-112 SALTCAKE WASTE RETRIEVAL TECHNOLOGY DEMONSTRATION

RPP-7825, Single-Shell Tank S-112 Full Scale Saltcake Waste Retrieval technology Demonstration Functions and Requirements

Retrieval Instrumentation Demonstration

Cost Estimating Input Sheet

Task Title	Develop, Install, and Operate a Densimeter in S-112	Revision Number	a
Start Date	03.09.02	WBS Number	5.02.01.01.03.09
Activity Code	SST Retrieval	BCS	
Prepared By	JR Biggs/AREngelman		

P3 Activity	Sub Task	P3 Res Code	ResourceType	Fiscal Year	SubtaskDescription	Org Code	Seq Num	COA	Note Ref	Budget Qty	Qty Type	Total Qty
TT28305DB	1	3DL	RPP/CH2M Other Hanford Contractors	2002	PNNL Development of New Densimeter	7T300		B000	4	387.00	$K	387,000.00
TT28305DB	2A	3PL	RPP/CH2M PHMC Support to RPP	2003	Work Package and EWP Equipment Removal	7T300		D000	2,3	6.50	$K	6,500.00
TT28305DB	2A	LC02B	RPP/CH2M - Electricians	2003	Work Package and EWP Equipment Removal	7T300		D000		8.00	HRS	336.48
TT28305DB	2A	LC08B	RPP/CH2M - Plumbers & Pipefitters	2003	Work Package and EWP Equipment Removal	7T300		D000		8.00	HRS	316.16
TT28305DB	2A	LE01E	RPP/CH2M - Chemical Engineers	2003	Work Package and EWP Equipment Removal	7T300		D000		8.00	HRS	453.44
TT28305DB	2A	LE05E	RPP/CH2M - Environmental Engineers	2003	Work Package and EWP Equipment Removal	7T300		D000		8.00	HRS	390.56
TT28305DB	2A	LE11E	RPP/CH2M - Quality Control Engrs	2003	Work Package and EWP Equipment Removal	7T300		D000		8.00	HRS	408.96
TT28305DB	2A	LE12E	RPP/CH2M - Safety Engineers	2003	Work Package and EWP Equipment Removal	7T300		D000		8.00	HRS	391.60
TT28305DB	2A	LG03B	RPP/CH2M - Office Clks(Specialized)	2003	Work Package and EWP Equipment Removal	7T300		D000		12.00	HRS	400.08
TT28305DB	2A	LM01E	RPP/CH2M - First Line Supervisors	2003	Work Package and EWP Equipment Removal	7T300		D000		8.00	HRS	376.56
TT28305DB	2A	LM02E	RPP/CH2M - Managers & Executives	2003	Work Package and EWP Equipment Removal	7T300		D000		8.00	HRS	551.92
TT28305DB	2A	LP07E	RPP/CH2M - Planner/Sched/Estimators	2003	Work Package and EWP Equipment Removal	7T300		D000		40.00	HRS	1,736.00
TT28305DB	2A	LP08E	RPP/CH2M - Health Physicists	2003	Work Package and EWP Equipment Removal	7T300		D000		8.00	HRS	399.92
TT28305DB	2A	LR05B	RPP/CH2M - Nuclear Waste Process Ops	2003	Work Package and EWP Equipment Removal	7T300		D000		8.00	HRS	337.28
TT28305DB	2A	LT05B	RPP/CH2M - Health Physics Techs	2003	Work Package and EWP Equipment Removal	7T300		D000		8.00	HRS	317.68
TT28305DB	2B	3PL	RPP/CH2M PHMC Support to RPP	2003	Equipment Staging	7T300		D000	2,3	6.50	$K	6,500.00
TT28305DB	2B	LC02B	RPP/CH2M - Electricians	2003	Equipment Staging (2 ea)	7T300		D000	2	38.00	HRS	1,598.28
TT28305DB	2B	LC08B	RPP/CH2M - Plumbers & Pipefitters	2003	Equipment Staging (2 ea)	7T300		D000	2	38.00	HRS	1,501.76
TT28305DB	2B	LE01E	RPP/CH2M - Chemical Engineers	2003	Equipment Staging (1 ea)	7T300		D000	2	19.00	HRS	1,076.92
TT28305DB	2B	LM01E	RPP/CH2M - First Line Supervisors	2003	Equipment Staging PIC (1 ea)	7T300		D000	2	19.00	HRS	894.33
TT28305DB	2B	LR05B	RPP/CH2M - Nuclear Waste Process Ops	2003	Equipment Staging (4 ea)	7T300		D000	2	77.00	HRS	3,246.32
TT28305DB	2B	LT05B	RPP/CH2M - Health Physics Techs	2003	Equipment Staging (2 ea)	7T300		D000	2	38.00	HRS	1,508.98
TT28305DB	2B	LT06B	RPP/CH2M - In Health/Safety Tech	2003	Equipment Staging (1 ea)	7T300		D000	2	10.00	HRS	398.50
TT28305DB	3	10L	RPP/CH2M Material & Equipment	2003	Consumables	7T300		D000	1	10.00	$K	10,000.00
TT28305DB	3	3PL	RPP/CH2M PHMC Support to RPP	2003	Equipment Installation	7T300		D000	3	5.10	$K	5,100.00
TT28305DB	3	LC02B	RPP/CH2M - Electricians	2003	Equipment Installation (2 ea)	7T300		D000	2	38.00	HRS	1,598.28

Retrieval Instrumentation Demonstration

Cost Estimating Input Sheet

Task Title	Develop, Install, and Operate a Densimeter in S-112	Revision Number	a
Sub-Task Number	03.09.02	WBS Number	5.02.01.01.03.09
Activity Name	SST Retrieval	[redacted]	
Prepared By	JR Biggs/AREngelman		

P3 Activity	Sub Task	P3 Res Code	ResourceType	Fiscal Year	SubtaskDescription	Org Code	Seq Num	COA	Note Ref	Budget Qty	Qty Type	Total Qty
TT28305DB	3	LC08B	RPP/CH2M - Plumbers & Pipefitters	2003	Equipment Installation (2 ea)	7T300		D000	2	38.00	HRS	1,501.76
TT28305DB	3	LE01E	RPP/CH2M - Chemical Engineers	2003	Equipment Installation (1 ea)	7T300		D000	2	19.00	HRS	1,076.92
TT28305DB	3	LM01E	RPP/CH2M - First Line Supervisors	2003	Equipment Insallation PIC (2 ea)	7T300		D000	2	38.00	HRS	1,788.66
TT28305DB	3	LR05B	RPP/CH2M - Nuclear Waste Process Ops	2003	Equipment Installation (6 ea)	7T300		D000	2	115.00	HRS	4,848.40
TT28305DB	3	LT05B	RPP/CH2M - Health Physics Techs	2003	Equipment Installation (4 ea)	7T300		D000	2	77.00	HRS	3,057.67
TT28305DB	3	LT06B	RPP/CH2M - In Health/Safety Tech	2003	Equipment Installation (1 ea)	7T300		D000	2	10.00	HRS	398.50
TT28305DB	4	3PL	RPP/CH2M PHMC Support to RPP	2003	Equipment Demobilization	7T300		D000	2,3	6.50	$K	6,500.00
TT28305DB	4	LC02B	RPP/CH2M - Electricians	2003	Equipment Demobilization	7T300		D000	2	10.00	HRS	420.60
TT28305DB	4	LC08B	RPP/CH2M - Plumbers & Pipefitters	2003	Equipment Demobilization	7T300		D000	2	10.00	HRS	395.20
TT28305DB	4	LM01E	RPP/CH2M - First Line Supervisors	2003	Equipment Demobilization	7T300		D000	2	19.00	HRS	894.33
TT28305DB	4	LR05B	RPP/CH2M - Nuclear Waste Process Ops	2003	Equipment Demobilization	7T300		D000	2	38.00	HRS	1,602.08
TT28305DB	4	LT05B	RPP/CH2M - Health Physics Techs	2003	Equipment Demobilization	7T300		D000	2	19.00	HRS	754.49
TT28305DB	5	LE05E	RPP/CH2M - Environmental Engineers	2003	Work Package Closeout	7T300		D000	2	10.00	HRS	488.20
TT28305DB	5	LE11E	RPP/CH2M - Quality Control Engrs	2003	Work Package Closeout	7T300		D000	2	10.00	HRS	511.20
TT28305DB	5	LE12E	RPP/CH2M - Safety Engineers	2003	Work Package Closeout	7T300		D000	2	10.00	HRS	489.50
TT28305DB	5	LG03B	RPP/CH2M - Office Clks(Specialized)	2003	Work Package Closeout	7T300		D000	2	10.00	HRS	333.40
TT28305DB	5	LM01E	RPP/CH2M - First Line Supervisors	2003	Work Package Closeout	7T300		D000	2	10.00	HRS	470.70
TT28305DB	5	LM02E	RPP/CH2M - Managers & Executives	2003	Work Package Closeout	7T300		D000	2	10.00	HRS	689.90
TT28305DB	5	LP07E	RPP/CH2M - Planner/Sched/Estimators	2003	Work Package Closeout	7T300		D000	2	19.00	HRS	824.60
TT28305DB	5	LP08E	RPP/CH2M - Health Physicists	2003	Work Package Closeout	7T300		D000	2	10.00	HRS	499.90
TT28305DB	5	LR05B	RPP/CH2M - Nuclear Waste Process Ops	2003	Work Package Closeout	7T300		D000	2	10.00	HRS	421.60
TT28305DB	5	LT05B	RPP/CH2M - Health Physics Techs	2003	Work Package Closeout	7T300		D000	2	10.00	HRS	397.10
TT28305DB	6	3DL	RPP/CH2M Other Hanford Contractors	2005	PNNL Support Operation of Densimeter System	7T300		B000		50.00	$K	50,000.00
TT28305DB	6	LE01E	RPP/CH2M - Chemical Engineers	2005	Equipment Operation (1 ea)	7T300		EA00	2	120.00	HRS	6,801.60
TT28305DB	6	LM01E	RPP/CH2M - First Line Supervisors	2005	Equipment Operation (1 ea)	7T300		EA00	2	120.00	HRS	5,648.40
TT28305DB	6	LR05B	RPP/CH2M - Nuclear Waste Process Ops	2005	Equipment Operation (2 ea)	7T300		EA00	2	240.00	HRS	10,118.40

Cost Estimating Input Sheet

Task Title	Develop, Install, and Operate a Densimeter in S-112	Revision Number	a
Subject Area	03.09.02	WBS Number	5.02.01.01.03.09
Sampling Method	SST Retrieval	PBS Number	
Prepared By	JR Biggs/AREngelman		

Notes

1. Consumables such as the pump containment sleeve, plastic sheeting, tape, containments, disposal containers, and waste bags are included in this figure.

2. All labor hours have been increased by 20% to account for unexpected occurances such as weather and resource availability, based on Interim Stabilization experience. Hours include pre and post job activity including pre-job briefings and dress/undress as applicable.

3. The crane crew consists of the following personnel and equipment:
Rates are based on the FY01 published site indirect pool rates
   1 - Management PIC (Person in Charge) ($130/hr)
   1 - Teamster - Heavy Load Truck Driver ($81/hr)
   1 - Operator - Crane Operator ($81/hr)
   4 - Ironworker/Riggers - Rig pump for lifting, flag crane operator, etc ($324/hr)
   1 - 33T Crane/truck/trailer - ($500/day or $55.56/hr.)
   Therefore:
   The total Crane and Rigging Crew Hourly Rate = $672/hr rounded
   Daily rate = 8 hrs X $672 = $5,376

4. PNNL Develpment costs consist of $100K for System Materials, $50K for Spares, and approx. 2100 MH @ $110/HR= $350K for a total of $387K.

Cost Estimating Input Sheet

Task Title	Develop, Install, and Operate a RAMAN Speciation System	Revision Number	a
Sub-Project	03.09.03	WBS Number	5.02.01.01.03.09
Project Owner	SST Retrieval	PBS Number	
Preparer Name	JR Biggs/AREngelman		

1.0 Scope Description

The scope of this task is to complete development and supply to Operations a RAMAN Speciation System (PNNL), Install the system in tank S-112 and Operation of the System during Saltcake Dissolution activities. This system will provide chemical speciation of the transfered waste for optimization of Process Operations.

The sub-tasks include:
1) RAMAN System development
2) Preparation for installation in the tank (Including Work Planning)
3) System Installation (Tank Intrusive entry)
4) Demobilization of equipment
5) Work Package Closeout
6) RAMAN System Operation

Operations activities are limited to support of PNNL for calibration. This support is estimated at one shift on alternate weeks for the 25 week duration. PNNL support will be required on a higher frequency to obtain/evaluate data and recommend changes to the retrieval process.

2.0 Estimating Assumptions and Exclusions

A - Current standard practices for rad con and industrial heatlth & safety remains unchanged
A - All work will be accomplished by personnel who are familiar with Tank Farm systems and equipment.
A - A COG Engineer dedicated to the installation will be provided.
A - Pit entries will be required.
A - Major events such as: radiation release, exhauster shut down or ammonia gas release are not anticipated.

3.0 Cost Estimate Basis

Estimates are based on historical experience for similar past tank farm work in the interim stabilization program. Where applicable Lessons Learned and actual costs from the installation of other field equipment have been incorporated into estimates and planning. Where applicable Lessons Learned from the installation of the transfer system in Tank AW-104 have been incorporated in to estimates and planning.

4.0 Estimate Step and Method

Preliminary/Analogy

5.0 Legal Driver/Reference Documents

Tri-Party Agreement Milestone M-45-03C, "Complete Full Scale Saltcake Waste Retrieval Technology Demonstration at S-112"
DOE Order 413.3, Program and Project Management for the Acquisition of Capital Assets,

RPP-7526, Preliminary Engineering Report for the 241-S-112 Retrieval System

RPP-8791, PRELIMINARY PROJECT EXECUTION PLAN FOR TANK 241-S-112 SALTCAKE WASTE RETRIEVAL TECHNOLOGY DEMONSTRATION

RPP-7825, Single-Shell Tank S-112 Full Scale Saltcake Waste Retrieval technology Demonstration Functions and Requirements

Cost Estimating Input Sheet

Task Title:	Develop, Install, and Operate a RAMAN Speciation System	Revision Number:	a
Subject Area:	03.09.03	WBS Number:	5.02.01.01.03.09
Project Name:	SST Retrieval	Prepared By:	
Prepared By:	JR Biggs/AREngelman		

P3 Activity	Sub Task	P3 Res Code	ResourceType	Fiscal Year	SubtaskDescription	Org Code	Seq Num	COA	Note Ref	Budget Qty	Qty Type	Total Qty
TT28305DC	1	3DL	RPP/CH2M Other Hanford Contractors	2002	PNNL Develop RAMAN Speciation System	7T300		B000	4	340.00	$K	340,000.00
TT28305DC	2A	3PL	RPP/CH2M PHMC Support to RPP	2003	Work Package and EWP Equipment Removal	7T300		D000	2,3	6.50	$K	6,500.00
TT28305DC	2A	LC02B	RPP/CH2M - Electricians	2003	Work Package and EWP Equipment Removal	7T300		D000		8.00	HRS	336.48
TT28305DC	2A	LC08B	RPP/CH2M - Plumbers & Pipefitters	2003	Work Package and EWP Equipment Removal	7T300		D000		8.00	HRS	316.16
TT28305DC	2A	LE01E	RPP/CH2M - Chemical Engineers	2003	Work Package and EWP Equipment Removal	7T300		D000		8.00	HRS	453.44
TT28305DC	2A	LE05E	RPP/CH2M - Environmental Engineers	2003	Work Package and EWP Equipment Removal	7T300		D000		8.00	HRS	390.56
TT28305DC	2A	LE11E	RPP/CH2M - Quality Control Engrs	2003	Work Package and EWP Equipment Removal	7T300		D000		8.00	HRS	408.96
TT28305DC	2A	LE12E	RPP/CH2M - Safety Engineers	2003	Work Package and EWP Equipment Removal	7T300		D000		8.00	HRS	391.60
TT28305DC	2A	LG03B	RPP/CH2M - Office Clks(Specialized)	2003	Work Package and EWP Equipment Removal	7T300		D000		12.00	HRS	400.08
TT28305DC	2A	LM01E	RPP/CH2M - First Line Supervisors	2003	Work Package and EWP Equipment Removal	7T300		D000		8.00	HRS	376.56
TT28305DC	2A	LM02E	RPP/CH2M - Managers & Executives	2003	Work Package and EWP Equipment Removal	7T300		D000		8.00	HRS	551.92
TT28305DC	2A	LP07E	RPP/CH2M - Planner/Sched/Estimators	2003	Work Package and EWP Equipment Removal	7T300		D000		40.00	HRS	1,736.00
TT28305DC	2A	LP08E	RPP/CH2M - Health Physicists	2003	Work Package and EWP Equipment Removal	7T300		D000		8.00	HRS	399.92
TT28305DC	2A	LR05B	RPP/CH2M - Nuclear Waste Process Ops	2003	Work Package and EWP Equipment Removal	7T300		D000		8.00	HRS	337.28
TT28305DC	2A	LT05B	RPP/CH2M - Health Physics Techs	2003	Work Package and EWP Equipment Removal	7T300		D000		8.00	HRS	317.68
TT28305DC	2B	3PL	RPP/CH2M PHMC Support to RPP	2003	Equipment Staging	7T300		D000	2,3	6.50	$K	6,500.00
TT28305DC	2B	LC02B	RPP/CH2M - Electricians	2003	Equipment Staging (2 ea)	7T300		D000	2	38.00	HRS	1,598.28
TT28305DC	2B	LC08B	RPP/CH2M - Plumbers & Pipefitters	2003	Equipment Staging (2 ea)	7T300		D000	2	38.00	HRS	1,501.76
TT28305DC	2B	LE01E	RPP/CH2M - Chemical Engineers	2003	Equipment Staging (1 ea)	7T300		D000	2	19.00	HRS	1,076.92
TT28305DC	2B	LM01E	RPP/CH2M - First Line Supervisors	2003	Equipment Staging PIC (1 ea)	7T300		D000	2	19.00	HRS	894.33
TT28305DC	2B	LR05B	RPP/CH2M - Nuclear Waste Process Ops	2003	Equipment Staging (4 ea)	7T300		D000	2	77.00	HRS	3,246.32
TT28305DC	2B	LT05B	RPP/CH2M - Health Physics Techs	2003	Equipment Staging (2 ea)	7T300		D000	2	38.00	HRS	1,508.98
TT28305DC	2B	LT06B	RPP/CH2M - In Health/Safety Tech	2003	Equipment Staging (1 ea)	7T300		D000	2	10.00	HRS	398.50
TT28305DC	3	10L	RPP/CH2M Material & Equipment	2003	Consumables	7T300		D000	1	10.00	$K	10,000.00
TT28305DC	3	3PL	RPP/CH2M PHMC Support to RPP	2003	Equipment Installation	7T300		D000	2,3	6.50	$K	6,500.00
TT28305DC	3	LC02B	RPP/CH2M - Electricians	2003	Equipment Installation (2 ea)	7T300		D000	2	38.00	HRS	1,598.28

Retrieval Instrumentation Demonstration

Cost Estimating Input Sheet

Task Title	Develop, Install, and Operate a RAMAN Speciation System	Revision Number	a
Sched Code	03.09.03	WBS Number	5.02.01.01.03.09
Activity Code	SST Retrieval	PBS Number	
Prepared By	JR Biggs/AREngelman		

P3 Activity	Sub Task	P3 Res Code	ResourceType	Fiscal Year	SubtaskDescription	Org Code	Seq Num	COA	Note Ref	Budget Qty	Qty Type	Total Qty
TT28305DC	3	LC08B	RPP/CH2M - Plumbers & Pipefitters	2003	Equipment Installation (2 ea)	7T300		D000	2	38.00	HRS	1,501.76
TT28305DC	3	LE01E	RPP/CH2M - Chemical Engineers	2003	Equipment Installation (1 ea)	7T300		D000	2	19.00	HRS	1,076.92
TT28305DC	3	LM01E	RPP/CH2M - First Line Supervisors	2003	Equipment Insallation PIC (2 ea)	7T300		D000	2	38.00	HRS	1,788.66
TT28305DC	3	LR05B	RPP/CH2M - Nuclear Waste Process Ops	2003	Equipment Installation (6 ea)	7T300		D000	2	115.00	HRS	4,848.40
TT28305DC	3	LT05B	RPP/CH2M - Health Physics Techs	2003	Equipment Installation (4 ea)	7T300		D000	2	77.00	HRS	3,057.67
TT28305DC	3	LT06B	RPP/CH2M - In Health/Safety Tech	2003	Equipment Installation (1 ea)	7T300		D000	2	10.00	HRS	398.50
TT28305DC	4	3PL	RPP/CH2M PHMC Support to RPP	2003	Equipment Demobilization	7T300		D000	2,3	6.50	$K	6,500.00
TT28305DC	4	LC02B	RPP/CH2M - Electricians	2003	Equipment Demobilization	7T300		D000	2	10.00	HRS	420.60
TT28305DC	4	LC08B	RPP/CH2M - Plumbers & Pipefitters	2003	Equipment Demobilization	7T300		D000	2	10.00	HRS	395.20
TT28305DC	4	LM01E	RPP/CH2M - First Line Supervisors	2003	Equipment Demobilization	7T300		D000	2	19.00	HRS	894.33
TT28305DC	4	LR05B	RPP/CH2M - Nuclear Waste Process Ops	2003	Equipment Demobilization	7T300		D000	2	38.00	HRS	1,602.08
TT28305DC	4	LT05B	RPP/CH2M - Health Physics Techs	2003	Equipment Demobilization	7T300		D000	2	19.00	HRS	754.49
TT28305DC	5	LE05E	RPP/CH2M - Environmental Engineers	2003	Work Package Closeout	7T300		D000	2	10.00	HRS	488.20
TT28305DC	5	LE11E	RPP/CH2M - Quality Control Engrs	2003	Work Package Closeout	7T300		D000	2	10.00	HRS	511.20
TT28305DC	5	LE12E	RPP/CH2M - Safety Engineers	2003	Work Package Closeout	7T300		D000	2	10.00	HRS	489.50
TT28305DC	5	LG03B	RPP/CH2M - Office Clks(Specialized)	2003	Work Package Closeout	7T300		D000	2	10.00	HRS	333.40
TT28305DC	5	LM01E	RPP/CH2M - First Line Supervisors	2003	Work Package Closeout	7T300		D000	2	10.00	HRS	470.70
TT28305DC	5	LM02E	RPP/CH2M - Managers & Executives	2003	Work Package Closeout	7T300		D000	2	10.00	HRS	689.90
TT28305DC	5	LP07E	RPP/CH2M - Planner/Sched/Estimators	2003	Work Package Closeout	7T300		D000	2	19.00	HRS	824.60
TT28305DC	5	LP08E	RPP/CH2M - Health Physicists	2003	Work Package Closeout	7T300		D000	2	10.00	HRS	499.90
TT28305DC	5	LR05B	RPP/CH2M - Nuclear Waste Process Ops	2003	Work Package Closeout	7T300		D000	2	10.00	HRS	421.60
TT28305DC	5	LT05B	RPP/CH2M - Health Physics Techs	2003	Work Package Closeout	7T300		D000	2	10.00	HRS	397.10
TT28305DC	6	3DL	RPP/CH2M Other Hanford Contractors	2005	PNNL Support Oper. and Data Interpretation	7T300		B000		60.00	$K	60,000.00
TT28305DC	6	LE01E	RPP/CH2M - Chemical Engineers	2005	Equipment Operation (1 ea)	7T300		EA00	2	120.00	HRS	6,801.60
TT28305DC	6	LM01E	RPP/CH2M - First Line Supervisors	2005	Equipment Operation (1 ea)	7T300		EA00	2	120.00	HRS	5,648.40
TT28305DC	6	LR05B	RPP/CH2M - Nuclear Waste Process Ops	2005	Equipment Operation (2 ea)	7T300		EA00	2	240.00	HRS	10,118.40

Cost Estimating Input Sheet

Task Title:	Develop, Install, and Operate a RAMAN Speciation System		Revision Number:	a
Sched. Activity:	03.09.03	WBS Number:	5.02.01.01.03.09	
Activity Owner:	SST Retrieval	PBS Number:		
Prepared By:	JR Biggs/AREngelman			

7.0 Notes:

1. Consumables such as the pump containment sleeve, plastic sheeting, tape, containments, disposal containers, and waste bags are included in this figure.

2. All labor hours have been increased by 20% to account for unexpected occurances such as weather and resource availability, based on Interim Stabilization experience. Hours include pre and post job activity including pre-job briefings and dress/undress as applicable.

3. The crane crew consists of the following personnel and equipment:
Rates are based on the FY01 published site indirect pool rates
   1 - Management PIC (Person in Charge) ($130/hr)
   1 - Teamster - Heavy Load Truck Driver ($81/hr)
   1 - Operator - Crane Operator ($81/hr)
   4 - Ironworker/Riggers - Rig pump for lifting, flag crane operator, etc ($324/hr)
   1 - 33T Crane/truck/trailer - ($500/day or $55.56/hr.)
   Therefore:
   The total Crane and Rigging Crew Hourly Rate = $672/hr rounded
   Daily rate = 8 hrs X $672 = $5,376

4. PNNL Develpment costs consist of $75K for System Materials, $50K for Spares, and approx. 1950 MH @ $110/HR= $215K for a total of $340K.

5.02.01.01.03.09

Retrieval Instrumentation Demonstration

Cost Estimating Input Sheet

Task Title	Develop, Install, and Operate a Radionuclide Monitoring System	Revision Number	a
Scope Code	03.09.04	WBS Number	5.02.01.01.03.09
Activity Owner	SST Retrieval	PBS Number	
Prepared By	JR Biggs/AREngelman		

1.0 Scope Description

The scope of this task is for PNNL provide a radionuclide monitoring system, Install the system in tank S-112 and Operation of the System during Saltcake Dissolution activities.

The sub-tasks include:
1) Radionuclide Monitor System development
2) Preparation for installation in the tank (Including Work Planning)
3) System Installation (Tank Intrusive entry)
4) Demobilization of equipment
5) Work Package Closeout
6) Radionuclide Monitoring System Operation

Operations activities are limited to support of PNNL for calibration. This support is estimated at two shifts a month for the 25 week duration. PNNL support will be required on a higher frequency to obtain/evaluate data and recommend changes to the retrieval process.

2.0 Estimating Assumptions and Exclusions

A - Current standard practices for rad con and industrial heatlth & safety remains unchanged
A - All work will be accomplished by personnel who are familiar with Tank Farm systems and equipment.
A - A COG Engineer dedicated to the installation will be provided.
A - Pit entries will be required.
A - Major events such as: radiation release, exhauster shut down or ammonia gas release are not anticipated.

3.0 Basis of Estimate

Estimates are based on historical experience for similar past tank farm work in the interim stabilization program. Where applicable Lessons Learned and actual costs from the installation of other field equipment have been incorporated into estimates and planning. Where applicable Lessons Learned from the installation of the transfer system in Tank AW-104 have been incorporated in to estimates and planning.

4.0 Estimate Stage and Method

Preliminary/Analogy

5.0 Legal Drivers/Reference Documents

Tri-Party Agreement Milestone M-45-03C, "Complete Full Scale Saltcake Waste Retrieval Technology Demonstration at S-112"
DOE Order 413.3, Program and Project Management for the Acquisition of Capital Assets,

RPP-7526, Preliminary Engineering Report for the 241-S-112 Retrieval System

RPP-8791, PRELIMINARY PROJECT EXECUTION PLAN FOR TANK 241-S-112 SALTCAKE WASTE RETRIEVAL TECHNOLOGY DEMONSTRATION

RPP-7825, Single-Shell Tank S-112 Full Scale Saltcake Waste Retrieval technology Demonstration Functions and Requirements

Retrieval Instrumentation Demonstration

Cost Estimating Input Sheet

Task Title	Develop, Install, and Operate a Radionuclide Monitoring System	Revision Number	a
Subtask Number	03.09.04	WBS Number	5.02.01.01.03.09
Activity Owner	SST Retrieval	PBS Number	
Preparer	JR Biggs/AREngelman		

P3 Activity	Sub Task	P3 Res Code	ResourceType	Fiscal Year	SubtaskDescription	Org Code	Seq Num	COA	Note Ref	Budget Qty	Qty Type	Total Qty
TT28305DD	1	3DL	RPP/CH2M Other Hanford Contractors	2002	PNNL Develop Radionuclide Monitoring System	7T300		B000	4	480.00	$K	480,000.00
TT28305DD	2A	3PL	RPP/CH2M PHMC Support to RPP	2003	Work Package and EWP Equipment Removal	7T300		D000	2,3	6.50	$K	6,500.00
TT28305DD	2A	LC02B	RPP/CH2M - Electricians	2003	Work Package and EWP Equipment Removal	7T300		D000		8.00	HRS	336.48
TT28305DD	2A	LC08B	RPP/CH2M - Plumbers & Pipefitters	2003	Work Package and EWP Equipment Removal	7T300		D000		8.00	HRS	316.16
TT28305DD	2A	LE01E	RPP/CH2M - Chemical Engineers	2003	Work Package and EWP Equipment Removal	7T300		D000		8.00	HRS	453.44
TT28305DD	2A	LE05E	RPP/CH2M - Environmental Engineers	2003	Work Package and EWP Equipment Removal	7T300		D000		8.00	HRS	390.56
TT28305DD	2A	LE11E	RPP/CH2M - Quality Control Engrs	2003	Work Package and EWP Equipment Removal	7T300		D000		8.00	HRS	408.96
TT28305DD	2A	LE12E	RPP/CH2M - Safety Engineers	2003	Work Package and EWP Equipment Removal	7T300		D000		8.00	HRS	391.60
TT28305DD	2A	LG03B	RPP/CH2M - Office Clks(Specialized)	2003	Work Package and EWP Equipment Removal	7T300		D000		12.00	HRS	400.08
TT28305DD	2A	LM01E	RPP/CH2M - First Line Supervisors	2003	Work Package and EWP Equipment Removal	7T300		D000		8.00	HRS	376.56
TT28305DD	2A	LM02E	RPP/CH2M - Managers & Executives	2003	Work Package and EWP Equipment Removal	7T300		D000		8.00	HRS	551.92
TT28305DD	2A	LP07E	RPP/CH2M - Planner/Sched/Estimators	2003	Work Package and EWP Equipment Removal	7T300		D000		40.00	HRS	1,736.00
TT28305DD	2A	LP08E	RPP/CH2M - Health Physicists	2003	Work Package and EWP Equipment Removal	7T300		D000		8.00	HRS	399.92
TT28305DD	2A	LR05B	RPP/CH2M - Nuclear Waste Process Ops	2003	Work Package and EWP Equipment Removal	7T300		D000		8.00	HRS	337.28
TT28305DD	2A	LT05B	RPP/CH2M - Health Physics Techs	2003	Work Package and EWP Equipment Removal	7T300		D000		8.00	HRS	317.68
TT28305DD	2B	3PL	RPP/CH2M PHMC Support to RPP	2003	Equipment Staging	7T300		D000	2,3	6.50	$K	6,500.00
TT28305DD	2B	LC02B	RPP/CH2M - Electricians	2003	Equipment Staging (2 ea)	7T300		D000	2	38.00	HRS	1,598.28
TT28305DD	2B	LC08B	RPP/CH2M - Plumbers & Pipefitters	2003	Equipment Staging (2 ea)	7T300		D000	2	38.00	HRS	1,501.76
TT28305DD	2B	LE01E	RPP/CH2M - Chemical Engineers	2003	Equipment Staging (1 ea)	7T300		D000	2	19.00	HRS	1,076.92
TT28305DD	2B	LM01E	RPP/CH2M - First Line Supervisors	2003	Equipment Staging PIC (1 ea)	7T300		D000	2	19.00	HRS	894.33
TT28305DD	2B	LR05B	RPP/CH2M - Nuclear Waste Process Ops	2003	Equipment Staging (4 ea)	7T300		D000	2	77.00	HRS	3,246.32
TT28305DD	2B	LT05B	RPP/CH2M - Health Physics Techs	2003	Equipment Staging (2 ea)	7T300		D000	2	38.00	HRS	1,508.98
TT28305DD	2B	LT06B	RPP/CH2M - In Health/Safety Tech	2003	Equipment Staging (1 ea)	7T300		D000	2	10.00	HRS	398.50
TT28305DD	3	10L	RPP/CH2M Material & Equipment	2003	Consumables	7T300		D000	1	10.00	$K	10,000.00
TT28305DD	3	3PL	RPP/CH2M PHMC Support to RPP	2003	Equipment Installation	7T300		D000	2,3	6.50	$K	6,500.00
TT28305DD	3	LC02B	RPP/CH2M - Electricians	2003	Equipment Installation (2 ea)	7T300		D000	2	38.00	HRS	1,598.28

Cost Estimating Input Sheet

Task Title	Develop, Install, and Operate a Radionuclide Monitoring System	Revision Number	a
Sched Act ID	03.09.04	WBS Number	5.02.01.01.03.09
Activity Name	SST Retrieval	CPS	
Prepared By	JR Biggs/AREngelman		

P3 Activity	Sub Task	P3 Res Code	ResourceType	Fiscal Year	SubtaskDescription	Org Code	Seq Num	COA	Note Ref	Budget Qty	Qty Type	Total Qty
TT28305DD	3	LC08B	RPP/CH2M - Plumbers & Pipefitters	2003	Equipment Installation (2 ea)	7T300		D000	2	38.00	HRS	1,501.76
TT28305DD	3	LE01E	RPP/CH2M - Chemical Engineers	2003	Equipment Installation (1 ea)	7T300		D000	2	19.00	HRS	1,076.92
TT28305DD	3	LM01E	RPP/CH2M - First Line Supervisors	2003	Equipment Insallation PIC (2 ea)	7T300		D000	2	38.00	HRS	1,788.66
TT28305DD	3	LR05B	RPP/CH2M - Nuclear Waste Process Ops	2003	Equipment Installation (6 ea)	7T300		D000	2	115.00	HRS	4,848.40
TT28305DD	3	LT05B	RPP/CH2M - Health Physics Techs	2003	Equipment Installation (4 ea)	7T300		D000	2	77.00	HRS	3,057.67
TT28305DD	3	LT06B	RPP/CH2M - In Health/Safety Tech	2003	Equipment Installation (1 ea)	7T300		D000	2	10.00	HRS	398.50
TT28305DD	4	3PL	RPP/CH2M PHMC Support to RPP	2003	Equipment Demobilization	7T300		D000	2,3	6.50	$K	6,500.00
TT28305DD	4	LC02B	RPP/CH2M - Electricians	2003	Equipment Demobilization	7T300		D000	2	10.00	HRS	420.60
TT28305DD	4	LC08B	RPP/CH2M - Plumbers & Pipefitters	2003	Equipment Demobilization	7T300		D000	2	10.00	HRS	395.20
TT28305DD	4	LM01E	RPP/CH2M - First Line Supervisors	2003	Equipment Demobilization	7T300		D000	2	19.00	HRS	894.33
TT28305DD	4	LR05B	RPP/CH2M - Nuclear Waste Process Ops	2003	Equipment Demobilization	7T300		D000	2	38.00	HRS	1,602.08
TT28305DD	4	LT05B	RPP/CH2M - Health Physics Techs	2003	Equipment Demobilization	7T300		D000	2	19.00	HRS	754.49
TT28305DD	5	LE05E	RPP/CH2M - Environmental Engineers	2003	Work Package Closeout	7T300		D000	2	10.00	HRS	488.20
TT28305DD	5	LE11E	RPP/CH2M - Quality Control Engrs	2003	Work Package Closeout	7T300		D000	2	10.00	HRS	511.20
TT28305DD	5	LE12E	RPP/CH2M - Safety Engineers	2003	Work Package Closeout	7T300		D000	2	10.00	HRS	489.50
TT28305DD	5	LG03B	RPP/CH2M - Office Clks(Specialized)	2003	Work Package Closeout	7T300		D000	2	10.00	HRS	333.40
TT28305DD	5	LM01E	RPP/CH2M - First Line Supervisors	2003	Work Package Closeout	7T300		D000	2	10.00	HRS	470.70
TT28305DD	5	LM02E	RPP/CH2M - Managers & Executives	2003	Work Package Closeout	7T300		D000	2	10.00	HRS	689.90
TT28305DD	5	LP07E	RPP/CH2M - Planner/Sched/Estimators	2003	Work Package Closeout	7T300		D000	2	19.00	HRS	824.60
TT28305DD	5	LP08E	RPP/CH2M - Health Physicists	2003	Work Package Closeout	7T300		D000	2	10.00	HRS	499.90
TT28305DD	5	LR05B	RPP/CH2M - Nuclear Waste Process Ops	2003	Work Package Closeout	7T300		D000	2	10.00	HRS	421.60
TT28305DD	5	LT05B	RPP/CH2M - Health Physics Techs	2003	Work Package Closeout	7T300		D000	2	10.00	HRS	397.10
TT28305DD	6	3DL	RPP/CH2M Other Hanford Contractors	2005	PNNL Support Oper. and Data Interpretation	7T300		B000		180.00	$K	180,000.00
TT28305DD	6	LE01E	RPP/CH2M - Chemical Engineers	2005	Equipment Operation (1 ea)	7T300		EA00	2	120.00	HRS	6,801.60
TT28305DD	6	LM01E	RPP/CH2M - First Line Supervisors	2005	Equipment Operation (1 ea)	7T300		EA00	2	120.00	HRS	5,648.40
TT28305DD	6	LR05B	RPP/CH2M - Nuclear Waste Process Ops	2005	Equipment Operation (2 ea)	7T300		EA00	2	240.00	HRS	10,118.40

Cost Estimating Input Sheet

Task Title:	Develop, Install, and Operate a Radionuclide Monitoring System	Revision Number:	a
Subject Area:	03.09.04	WBS Number:	5.02.01.01.03.09
Activity Contact:	SST Retrieval	PBS Number:	
Prepared By:	JR Biggs/AREngelman		

Notes:

1. Consumables such as the pump containment sleeve, plastic sheeting, tape, containments, disposal containers, and waste bags are included in this figure.

2. All labor hours have been increased by 20% to account for unexpected occurances such as weather and resource availability, based on Interim Stabilization experience. Hours include pre and post job activity including pre-job briefings and dress/undress as applicable.

3. The crane crew consists of the following personnel and equipment:
Rates are based on the FY01 published site indirect pool rates
   1 - Management PIC (Person in Charge) ($130/hr)
   1 - Teamster - Heavy Load Truck Driver ($81/hr)
   1 - Operator - Crane Operator ($81/hr)
   4 - Ironworker/Riggers - Rig pump for lifting, flag crane operator, etc ($324/hr)
   1 - 33T Crane/truck/trailer - ($500/day or $55.56/hr.)
   Therefore:
   The total Crane and Rigging Crew Hourly Rate = $672/hr rounded
   Daily rate = 8 hrs X $672 = $5,376

4. PNNL Develpment costs consist of $200K for System Materials, $75K for Spares, and approx. 1860 MH @ $110/HR= $205K for a total of $630K.

Cost Estimating Input Sheet

Task Title	Perform In Process Tank Grab Samples	Revision Number	a
Cost Account	03.09.05	WBS Number	5.02.01.01.03.09
Activity Owner	SST Retrieval	PBS Number	
Prepared By	JR Biggs/AREngelman		

1.0 Scope Description

The scope of this task is to perform and analyse two grab samples from Tank S-112 during retrieval activities. This scope will be performed by Characterization Projects and sent to the 222-S Laboratory for analysis.

The sub-tasks include:
1) Perform Grab Samples (2)
2) Perform Sample Analysis and Issue Report

2.0 Estimating Assumptions and Exclusions

A - Current standard practices for rad con and industrial heatlth & safety remains unchanged
A - All work will be accomplished by personnel who are familiar with Tank Farm systems and equipment.
A - A COG Engineer dedicated to the installation will be provided.
A - Pit entries will be required.
A - Major events such as: radiation release, exhauster shut down or ammonia gas release are not anticipated.

3.0 Basis of Estimate

Sample planning and operations estimates- based on current estimates from the Characterization organization
Sampling analysis and reporting estimates- based on estimates from 222S/WSCF Laboratories Client Services and engineering judgement

4.0 Estimate Stage and Method

Preliminary/Analogy

5.0 Legal Driver and Reference Documents

Tri-Party Agreement Milestone M-45-03C, "Complete Full Scale Saltcake Waste Retrieval Technology Demonstration at S-112"
DOE Order 413.3, Program and Project Management for the Acquisition of Capital Assets,

RPP-7526, Preliminary Engineering Report for the 241-S-112 Retrieval System

RPP-8791, PRELIMINARY PROJECT EXECUTION PLAN FOR TANK 241-S-112 SALTCAKE WASTE RETRIEVAL TECHNOLOGY DEMONSTRATION

RPP-7825, Single-Shell Tank S-112 Full Scale Saltcake Waste Retrieval technology Demonstration Functions and Requirements

Cost Estimating Input Sheet

Task Title	Perform In Process Tank Grab Samples	Revision Number	a
Subject Code	03.09.05	WBS Number	5.02.01.01.03.09
Activity Code	SST Retrieval	CAS Number	
Prepared By	JR Biggs/AREngelman		

P3 Activity	Sub Task	P3 Res Code	ResourceType	Fiscal Year	SubtaskDescription	Org Code	Seq Num	COA	Note Ref	Budget Qty	Qty Type	Total Qty
TT28305CA6	A1	10L	RPP/CH2M Material & Equipment	2005	TSAP/Planning/Materials (1 liter)	7T300		EA00		0.20	$K	200.00
TT28305CA6	A1	1PL	RPP/CH2M P Card Purchases	2005	TSAP/Planning/Materials (1 liter)	7T300		EA00		3.00	$K	3,000.00
TT28305CA6	A1	21L	RPP/CH2M PO Contracts	2005	TSAP/Planning/Materials (1 liter)	7T300		EA00		0.20	$K	200.00
TT28305CA6	A1	3DL	RPP/CH2M Other Hanford Contractors	2005	TSAP/Planning/Materials (1 liter)	7T300		EA00		6.00	$K	6,000.00
TT28305CA6	A1	3PL	RPP/CH2M PHMC Support to RPP	2005	TSAP/Planning/Materials (1 liter)	7T300		EA00		4.00	$K	4,000.00
TT28305CA6	A1	93L	RPP/CH2M WMNW	2005	TSAP/Planning/Materials (1 liter)	7T300		EA00		1.00	$K	1,000.00
TT28305CA6	A1	LC01B	RPP/CH2M - Carpenters	2005	TSAP/Planning/Materials (1 liter)	7T300		EA00		2.00	HRS	77.52
TT28305CA6	A1	LC02B	RPP/CH2M - Electricians	2005	TSAP/Planning/Materials (1 liter)	7T300		EA00		30.00	HRS	1,261.80
TT28305CA6	A1	LC06B	RPP/CH2M - Millwrights	2005	TSAP/Planning/Materials (1 liter)	7T300		EA00		8.00	HRS	316.16
TT28305CA6	A1	LC07B	RPP/CH2M - Painters	2005	TSAP/Planning/Materials (1 liter)	7T300		EA00		5.00	HRS	195.80
TT28305CA6	A1	LC08B	RPP/CH2M - Plumbers & Pipefitters	2005	TSAP/Planning/Materials (1 liter)	7T300		EA00		23.00	HRS	908.96
TT28305CA6	A1	LC12B	RPP/CH2M - Other Crafts	2005	TSAP/Planning/Materials (1 liter)	7T300		EA00		1.00	HRS	39.52
TT28305CA6	A1	LE01E	RPP/CH2M - Chemical Engineers	2005	TSAP/Planning/Materials (1 liter)	7T300		EA00		180.00	HRS	10,202.40
TT28305CA6	A1	LE07E	RPP/CH2M - Mechanical Engineers	2005	TSAP/Planning/Materials (1 liter)	7T300		EA00		50.00	HRS	2,595.00
TT28305CA6	A1	LE10E	RPP/CH2M - Plant Engineers	2005	TSAP/Planning/Materials (1 liter)	7T300		EA00		32.00	HRS	1,337.60
TT28305CA6	A1	LE11E	RPP/CH2M - Quality Control Engrs	2005	TSAP/Planning/Materials (1 liter)	7T300		EA00		2.00	HRS	102.24
TT28305CA6	A1	LE12E	RPP/CH2M - Safety Engineers	2005	TSAP/Planning/Materials (1 liter)	7T300		EA00		30.00	HRS	1,468.50
TT28305CA6	A1	LE13E	RPP/CH2M - Other Engineers	2005	TSAP/Planning/Materials (1 liter)	7T300		EA00		3.00	HRS	186.27
TT28305CA6	A1	LG01E	RPP/CH2M - Administrative Assistants	2005	TSAP/Planning/Materials (1 liter)	7T300		EA00		3.00	HRS	92.49
TT28305CA6	A1	LG03B	RPP/CH2M - Office Clks(Specialized)	2005	TSAP/Planning/Materials (1 liter)	7T300		EA00		52.00	HRS	1,733.68
TT28305CA6	A1	LP07E	RPP/CH2M - Planner/Sched/Estimators	2005	TSAP/Planning/Materials (1 liter)	7T300		EA00		100.00	HRS	4,340.00
TT28305CA6	A1	LP08E	RPP/CH2M - Health Physicists	2005	TSAP/Planning/Materials (1 liter)	7T300		EA00		80.00	HRS	3,999.20
TT28305CA6	A1	LP15E	RPP/CH2M - Trainers & Instructors	2005	TSAP/Planning/Materials (1 liter)	7T300		EA00		10.00	HRS	419.60
TT28305CA6	A1	LP16E	RPP/CH2M - Technical Writers/Editors	2005	TSAP/Planning/Materials (1 liter)	7T300		EA00		8.00	HRS	337.12
TT28305CA6	A1	LP17E	RPP/CH2M - Other Professionals	2005	TSAP/Planning/Materials (1 liter)	7T300		EA00		1.00	HRS	33.40
TT28305CA6	A1	LR05B	RPP/CH2M - Nuclear Waste Process Ops	2005	Acqiure Grab sample (assume 1 liter)	7T300		EA00		1,600.00	HRS	67,456.00

Cost Estimating Input Sheet

Task Title	Perform In Process Tank Grab Samples	Revision Number	a
Schedule Number	03.09.05	WBS Number	5.02.01.01.03.09
Activity Description	SST Retrieval	PBS Number	
Prepared By	JR Biggs/AREngelman		

P3 Activity	Sub Task	P3 Res Code	ResourceType	Fiscal Year	SubtaskDescription	Org Code	Seq Num	COA	Note Ref	Budget Qty	Qty Type	Total Qty
TT28305CA6	A1	LS01E	RPP/CH2M - Chemists	2005	TSAP/Planning/Materials (1 liter)	7T300		EA00		10.00	HRS	545.40
TT28305CA6	A1	LS02E	RPP/CH2M - Environmental Scientists	2005	TSAP/Planning/Materials (1 liter)	7T300		EA00		1.00	HRS	49.59
TT28305CA6	A1	LS03E	RPP/CH2M - Geolog/Geophysic/Hydro	2005	TSAP/Planning/Materials (1 liter)	7T300		EA00		14.00	HRS	845.88
TT28305CA6	A2	4VL	RPP/CH2M Fleet	2005	Acquire Grab Sample (1 liter)	7T300		EA00		3.00	$K	3,000.00
TT28305CA6	A2	LL07B	RPP/CH2M - Light Vehicle Drivers	2005	Acquire Grab Sample (1 liter)	7T300		EA00		1.00	HRS	32.06
TT28305CA6	A2	LM01E	RPP/CH2M - First Line Supervisors	2005	Acquire Grab Sample (1 liter)	7T300		EA00		210.00	HRS	9,884.70
TT28305CA6	A2	LM02E	RPP/CH2M - Managers & Executives	2005	Acquire Grab Sample (1 liter)	7T300		EA00		110.00	HRS	7,588.90
TT28305CA6	A2	LP09E	RPP/CH2M - In Hygienists	2005	Acquire Grab Sample (1 liter)	7T300		EA00		20.00	HRS	932.60
TT28305CA6	A2	LR05B	RPP/CH2M - Nuclear Waste Process Ops	2005	Acquire Grab Sample (1 liter)	7T300		EA00		570.00	HRS	24,031.20
TT28305CA6	A2	LT05B	RPP/CH2M - Health Physics Techs	2005	Acquire Grab Sample (1 liter)	7T300		EA00		175.00	HRS	6,949.25
TT28305CA6	A2	LT06B	RPP/CH2M - In Health/Safety Tech	2005	Acquire Grab Sample (1 liter)	7T300		EA00		50.00	HRS	1,992.50
TT28305CA6	A2	LT07B	RPP/CH2M - Instrument & Control Techs	2005	Acquire Grab Sample (1 liter)	7T300		EA00		2.00	HRS	84.34
TT28305CA6	A2	LT11B	RPP/CH2M - Other Technicians	2005	Acquire Grab Sample (1 liter)	7T300		EA00		5.00	HRS	165.80
TT28305CA6	A3	3PL	RPP/CH2M PHMC Support to RPP	2005	Sample Analysis and Data Reporting	7T300		EA00		500.00	$K	500,000.00

Cost Estimating Input Sheet

Task Title:	Perform In Process Tank Grab Samples	Revision Number:	a
Sched Act Id:	03.09.05	WBS Number:	5.02.01.01.03.09
Activity Owner:	SST Retrieval	PBS Number:	
Prepared By:	JR Biggs/AREngelman		

7.0 Notes:

Retrieval Instrumentation Demonstration

Cost Estimating Input Sheet

Task Title:	PNNL Perform Saltcake Runoff Experiments	Revision Number:	a
Sched Act Id:	03.09.06	WBS Number:	5.02.01.01.03.09
Activity Owner:	SST Retrieval	PBS Number:	
Prepared By:	JR Biggs/AREngelman		

1.0 Scope Description:

The scope of this task is for PNNL to perform testing of water runoff properties on simulated Saltcake Waste. A report documenting the findings and recommended process controls will be provided by PNNL and the end of testing.

2.0 Estimating Assumptions and Exclusions:

3.0 Basis of Estimate:

A significant amount of work similar to this work scope is accomplished each year by PNNL. The institutional memory of the work process and requirements forms the basis for this estimate.

4.0 Estimate Stage and Method:

Preliminary/Analogy

5.0 Legal Drivers/Reference Documents:

Tri-Party Agreement Milestone M-45-03C, "Complete Full Scale Saltcake Waste Retrieval Technology Demonstration at S-112"
DOE Order 413.3, Program and Project Management for the Acquisition of Capital Assets,

RPP-7526, Preliminary Engineering Report for the 241-S-112 Retrieval System

RPP-8791, PRELIMINARY PROJECT EXECUTION PLAN FOR TANK 241-S-112 SALTCAKE WASTE RETRIEVAL TECHNOLOGY DEMONSTRATION

RPP-7825, Single-Shell Tank S-112 Full Scale Saltcake Waste Retrieval technology Demonstration Functions and Requirements

Cost Estimating Input Sheet

Task Title:	PNNL Perform Saltcake Runoff Experiments	Revision Number:	a
Sched Act Id:	03.09.06	WBS Number:	5.02.01.01.03.09
Activity Owner:	SST Retrieval	PBS Number:	
Prepared By:	JR Biggs/AREngelman		

P3 Activity	Sub Task	P3 Res Code	ResourceType	Fiscal Year	SubtaskDescription	Org Code	Seq Num	COA	Note Ref	Budget Qty	Qty Type	Total Qty
TT28305DF	1	3DL	RPP/CH2M Other Hanford Contractors	2003	Perform Saltcake Runoff Experiments	7T300		B000	1	180.00	$K	180,000.00

Cost Estimating Input Sheet

Task Title:	PNNL Perform Saltcake Runoff Experiments	Revision Number:	a
Sched Act Id:	03.09.06	WBS Number:	5.02.01.01.03.09
Activity Owner:	SST Retrieval	PBS Number:	
Prepared By:	JR Biggs/AREngelman		

7.0 Notes:

1. Flatbed Runoff Experiments: Plan and perform experiments to understand dissolution and erosion during runoff. !364MH@110/HR= $150K

Cost Estimating Input Sheet

Task Title:	Provide Support for Testing and Operation of Instrumentation	Revision Number:	a
Sched Act Id:	03.09.07	WBS Number:	5.02.01.01.03.09
Activity Owner:	SST Retrieval	PBS Number:	
Prepared By:	JR Biggs/AREngelman		

1.0 Scope Description:

The scope of this task is to provide for coldtesting and support for the RAMAN, TMS, Radionuclide Monitor, and Densimeter Systems. The support consists of resources from Operations, Engineering, Process Engineering, and Maintenance organizations. These resources will be needed to complete coldtesting, operations, and maintenance of the Instrumentation Systems.

The sub-tasks include:
1) Support Cold Testing of Instrumentation Systems
2) Support for Operations
3) Maintenance support for Instrumentation Systems

Cold Testing is estimated to be 5 day duration for each system resulting in a 20 day total duration. Support during operation and maintenance requirements are based on a 180 day (25 week) duration. Operations support is estimated to require 2 shifts/week. Due to the lack of experience with these newly developed systems a conservative maintenance frequency of 2 Shifts/month has been used.

2.0 Estimating Assumptions and Exclusions:

A - Current standard practices for rad con and industrial heatlth & safety remains unchanged
A - All work will be accomplished by personnel who are familiar with Tank Farm systems and equipment.
A - No maintenance activities will require pit entry

3.0 Basis of Estimate:

A significant amount of work similar to this work scope is accomplished each year in the RPP organization. The institutional memory of the work process and requirements forms the basis for this estimate. Where applicable Lessons Learned from other installation activities have been incorporated in to estimates and planning.

4.0 Estimate Stage and Method:

Preliminary/Analogy

5.0 Legal Drivers/Reference Documents:

Tri-Party Agreement Milestone M-45-03C, "Complete Full Scale Saltcake Waste Retrieval Technology Demonstration at S-112"
DOE Order 413.3, Program and Project Management for the Acquisition of Capital Assets,

RPP-7526, Preliminary Engineering Report for the 241-S-112 Retrieval System

RPP-8791, PRELIMINARY PROJECT EXECUTION PLAN FOR TANK 241-S-112 SALTCAKE WASTE RETRIEVAL TECHNOLOGY DEMONSTRATION

RPP-7825, Single-Shell Tank S-112 Full Scale Saltcake Waste Retrieval technology Demonstration Functions and Requirements

Cost Estimating Input Sheet

Task Title:	Provide Support for Testing and Operation of Instrumentation	Revision Number:	a
Sched Act Id:	03.09.07	WBS Number:	5.02.01.01.03.09
Activity Owner:	SST Retrieval	PBS Number:	
Prepared By:	JR Biggs/AREngelman		

P3 Activity	Sub Task	P3 Res Code	ResourceType	Fiscal Year	SubtaskDescription	Org Code	Seq Num	COA	Note Ref	Budget Qty	Qty Type	Total Qty
TT28305DG	1	3DL	RPP/CH2M Other Hanford Contractors	2004	PNNL Testing Support (4ea@$110/hr)	7T300		DM00		70.40	$K	70,400.00
TT28305DG	1	3PL	RPP/CH2M PHMC Support to RPP	2004	ColdTesting Instrumentation (15 days)	7T300		DM00	2,3	97.20	$K	97,200.00
TT28305DG	1	98L	RPP/CH2M Cogema	2004	Project Operations Support (2ea)@$90/hr	7T300		DM00		28.80	$K	28,800.00
TT28305DG	1	98L	RPP/CH2M Cogema	2004	Project Engineering Support (2ea)@$90/hr	7T300		DM00		28.80	$K	28,800.00
TT28305DG	1	LC02B	RPP/CH2M - Electricians	2004	ColdTesting Instrumentation (2ea)	7T300		DM00		384.00	HRS	16,151.04
TT28305DG	1	LC08B	RPP/CH2M - Plumbers & Pipefitters	2004	Cold Testing Instrumentation (2ea)	7T300		DM00		384.00	HRS	15,175.68
TT28305DG	1	LE01E	RPP/CH2M - Chemical Engineers	2004	CHG Eng Support for ColdTesting (4ea)	7T300		DM00		576.00	HRS	32,647.68
TT28305DG	1	LE01E	RPP/CH2M - Chemical Engineers	2004	Process Eng Support for ColdTesting (31a)	7T300		DM00		192.00	HRS	10,882.56
TT28305DG	1	LE11E	RPP/CH2M - Quality Control Engrs	2004	ColdTesting Instrumentation	7T300		DM00		192.00	HRS	9,815.04
TT28305DG	1	LE12E	RPP/CH2M - Safety Engineers	2004	ColdTesting Instrumentation	7T300		DM00		192.00	HRS	9,398.40
TT28305DG	1	LM01E	RPP/CH2M - First Line Supervisors	2004	FWS for ColdTesting Instrumentation (2ea)	7T300		DM00		384.00	HRS	18,074.88
TT28305DG	1	LM02E	RPP/CH2M - Managers & Executives	2004	Project Manager Oversight for Testing	7T300		DM00		192.00	HRS	13,246.08
TT28305DG	1	LM02E	RPP/CH2M - Managers & Executives	2004	Test Director for ColdTesting Instrumentation	7T300		DM00		192.00	HRS	13,246.08
TT28305DG	1	LR05B	RPP/CH2M - Nuclear Waste Process Ops	2004	ColdTesting Instrumentation (4ea)	7T300		DM00		864.00	HRS	36,426.24
TT28305DG	1	LT05B	RPP/CH2M - Health Physics Techs	2004	ColdTesting Instrumentation (2ea)	7T300		DM00		384.00	HRS	15,248.64
TT28305DG	1	LT07B	RPP/CH2M - Instrument & Control Techs	2004	ColdTesting Instrumentation (4ea)	7T300		DM00		768.00	HRS	32,386.56
TT28305DG	2	LE01E	RPP/CH2M - Chemical Engineers	2005	Process Eng Support for Operation (1.5 for 25 wks)	7T300		EA00		1,500.00	HRS	85,020.00
TT28305DG	2	LE01E	RPP/CH2M - Chemical Engineers	2005	System Eng Support for Operation	7T300		EA00		400.00	HRS	22,672.00
TT28305DG	2	LM01E	RPP/CH2M - First Line Supervisors	2005	OE Support for Operations	7T300		EA00		400.00	HRS	18,828.00
TT28305DG	2	LR05B	RPP/CH2M - Nuclear Waste Process Ops	2005	Support Operation of Instrumentation (3ea)	7T300		EA00		1,200.00	HRS	50,592.00
TT28305DG	2	LT05B	RPP/CH2M - Health Physics Techs	2002	Support Operation of Instrumentation (2ea)	7T300		EA00		800.00	HRS	31,768.00
TT28305DG	2	LT07B	RPP/CH2M - Instrument & Control Techs	2005	Support Operation of Instrumentation (3ea)	7T300		EA00		1,200.00	HRS	50,604.00
TT28305DG	3	LE01E	RPP/CH2M - Chemical Engineers	2005	System Eng Support for Maintenance	7T300		EA00		100.00	HRS	5,668.00
TT28305DG	3	LM01E	RPP/CH2M - First Line Supervisors	2005	OE Support for Maintenance	7T300		EA00		100.00	HRS	4,707.00
TT28305DG	3	LR05B	RPP/CH2M - Nuclear Waste Process Ops	2005	Support Maintenance of Instrumentation (3ea)	7T300		EA00		300.00	HRS	12,648.00
TT28305DG	3	LT05B	RPP/CH2M - Health Physics Techs	2005	Support Maintenance of Instrumentation (2ea)	7T300		EA00		200.00	HRS	7,942.00

Retrieval Instrumentation Demonstration

Cost Estimating Input Sheet

Task Title:	Provide Support for Testing and Operation of Instrumentation	Revision Number:	a
Sched Act Id:	03.09.07	WBS Number:	5.02.01.01.03.09
Activity Owner:	SST Retrieval	PBS Number:	
Prepared By:	JR Biggs/AREngelman		

P3 Activity	Sub Task	P3 Res Code	ResourceType	Fiscal Year	SubtaskDescription	Org Code	Seq Num	COA	Note Ref	Budget Qty	Qty Type	Total Qty
TT28305DG	3	LT07B	RPP/CH2M - Instrument & Control Techs	2005	Support Maintenance of Instrumentation (3ea)	7T300		EA00		300.00	HRS	12,651.00

Cost Estimating Input Sheet

Task Title:	Provide Support for Testing and Operation of Instrumentation	Revision Number:	a
Sched Act Id:	03.09.07	WBS Number:	5.02.01.01.03.09
Activity Owner:	SST Retrieval	PBS Number:	
Prepared By:	JR Biggs/AREngelman		

7.0 Notes:

1. All labor hours have been increased by 20% to account for unexpected occurances such as weather and resource availability, based on Interim Stabilization experience. Hours include pre and post job activity including pre-job briefings and dress/undress as applicable.

2. The crane crew consists of the following personnel and equipment:
Rates are based on the FY01 published site indirect pool rates
   1 - Management PIC (Person in Charge) ($130/hr)
   1 - Teamster - Heavy Load Truck Driver ($81/hr)
   1 - Operator - Crane Operator ($81/hr)
   4 - Ironworker/Riggers - Rig pump for lifting, flag crane operator, etc ($324/hr)
   1 - 33T Crane/truck/trailer - ($500/day or $55.56/hr.)
   Therefore:
   The total Crane and Rigging Crew Hourly Rate = $672/hr rounded
   Daily rate = 8 hrs X $672 = $5,376

Activity Information - Detail

5.02.01.02.0 S-112 Design and Engineering

Summary

Activity ID	Activity Title	Cost
12.01.01	FY 2001 Actual Cost - Project definition/Preconceptual	$824,500.00
12.01.02	Preconceptual Engineering	$142,871.55
12.01.03	Conceptual Design	$421,107.40
12.01.04	Preliminary Design	$1,323,609.75
12.01.05	Final Design	$1,133,733.05
12.01.06	Engineering Support	$2,143,276.16
12.01.07	Quality Assurance	$126,108.55

Summary for 'TBR' = 5.02.01.02.07.12.01 (7 detail records)

Sum *$6,115,206.46*

Cost Estimating Input Sheet

Task Title:	FY 2001 Actual Cost - Project definition/Preconceptual	Revision Number:	b
Sched Act Id:	12.01.01	WBS Number:	5.02.01.02.07.12.01
Activity Owner:	SST Retrieval	PBS Number:	
Prepared By:	CE Hanson/AREngelman		

1.0 Scope Description:

This is a place holder for prior FY 2001 actual costs. FY 2001 detailed scope completions (by 9/30/2001) can be found on the detailed project schedule.

2.0 Estimating Assumptions and Exclusions:

E - These costs exclude the TPA F&R. These costs are included in activity 12.09.01

3.0 Basis of Estimate:

N/A - These are actual costs

4.0 Estimate Stage and Method:

N/A - These are actual costs

5.0 Legal Drivers/Reference Documents:

Tri-Party Agreement Milestone M-45-03C, "Complete Full Scale Saltcake Waste Retrieval Technology Demonstration at S-112"
DOE Order 413.3, Program and Project Management for the Acquisition of Capital Assets,

RPP-7526, Preliminary Engineering Report for the 241-S-112 Retrieval System

RPP-8791, PRELIMINARY PROJECT EXECUTION PLAN FOR TANK 241-S-112 SALTCAKE WASTE RETRIEVAL TECHNOLOGY DEMONSTRATION

RPP-7825, Single-Shell Tank S-112 Full Scale Saltcake Waste Retrieval technology Demonstration Functions and Requirements

S-112 Design and Engineering

Cost Estimating Input Sheet

Task Title:	FY 2001 Actual Cost - Project definition/Preconceptual	Revision Number:	b
Sched Act Id:	12.01.01	WBS Number:	5.02.01.02.07.12.01
Activity Owner:	SST Retrieval	PBS Number:	
Prepared By:	CE Hanson/AREngelman		

P3 Activity	Sub Task	P3 Res Code	ResourceType	Fiscal Year	SubtaskDescription	Org Code	Seq Num	COA	Note Ref	Budget Qty	Qty Type	Total Qty
TT28305B6	A	2BL	RPP/CH2M Undistributed Budget	2001	FY 2001 Actual cost - all resources					824.50	$K	824,500.00

Cost Estimating Input Sheet

Task Title:	FY 2001 Actual Cost - Project definition/Preconceptual	Revision Number:	b
Sched Act Id:	12.01.01	WBS Number:	5.02.01.02.07.12.01
Activity Owner:	SST Retrieval	PBS Number:	
Prepared By:	CE Hanson/AREngelman		

7.0 Notes:

Cost Estimating Input Sheet

Task Title:	Preconceptual Engineering	Revision Number:	b
Sched Act Id:	12.01.02	WBS Number:	5.02.01.02.07.12.01
Activity Owner:	SST Retrieval	PBS Number:	
Prepared By:	CE Hanson/AREngelman		

1.0 Scope Description:

This activity includes preconceptual design planning and development and the following specific tasks:

A. S-112 Assessment
B. Identify pump technology
C. Prepare AGA
D.. Prepare, negotiate Procurement Spec. for Conceptual Design and award contract

2.0 Estimating Assumptions and Exclusions:

A- Subcontractor rates based on expectation of using a combination of principle and senior engineer

E-LDMM Functions & Requirements are excluded from this estimate
E-Senior management review and approval manhours are excluded from this estimate. They are carried in their respective management budgets elsewhere.
E- Process engineering support is excluded from this activity. It is included in activity 12.01.06.
E- QA reviews are excluded from this activity. They are included in activity 12.01.07.
E- Safety reviews are excluded from this activity. They are included in 12.08.02
E- Environmental reviews are excluded from this activity. They are included in activtity 12.07.01.

3.0 Basis of Estimate:

The basis of this estimate is the following activities and resource quanitfication based on experienced engineering judgement using tank farm experience and the estimate prepared in RPP7526, "Preliminary Engineering Report for the 241-S-112 Retrieval System" (PER). This work is to be performed by CHG engineering as well as through subcontractor support. Specific resource assumptions are included in the resource detail information. Hours include all efforts including preparation, review, approval, and issuing cycles. For ECNs, hours include issuing the ECN; incorporating all comments; preparation of USQ screens; and releasing the ECN.

A S-112/Assessment
A1. Mechanical Field Walkdowns - 5 hours per each resource for 25 drawing walkdowns
A2. Electrical Field Walkdowns - 5 hours per each resource for 13 drawing walkdowns.
B. Identify backup pump technology - 320 hr.
C. Prepare AGA - 160 hr.
D. Prepare, negotiate, and finalize procurement spec. for Conceptual Design and award contract- 360 hrs.

4.0 Estimate Stage and Method:

Preliminary/Analogy

5.0 Legal Drivers/Reference Documents:

Tri-Party Agreement Milestone M-45-03C, "Complete Full Scale Saltcake Waste Retrieval Technology Demonstration at S-112"
DOE Order 413.3, Program and Project Management for the Acquisition of Capital Assets,

RPP-7526, Preliminary Engineering Report for the 241-S-112 Retrieval System

RPP-8791, PRELIMINARY PROJECT EXECUTION PLAN FOR TANK 241-S-112 SALTCAKE WASTE RETRIEVAL TECHNOLOGY DEMONSTRATION

RPP-7825, Single-Shell Tank S-112 Full Scale Saltcake Waste Retrieval technology Demonstration Functions and Requirements

Cost Estimating Input Sheet

Task Title:	Preconceptual Engineering	Revision Number:	b
Sched Act Id:	12.01.02	WBS Number:	5.02.01.02.07.12.01
Activity Owner:	SST Retrieval	PBS Number:	
Prepared By:	CE Hanson/AREngelman		

P3 Activity	Sub Task	P3 Res Code	ResourceType	Fiscal Year	SubtaskDescription	Org Code	Seq Num	COA	Note Ref	Budget Qty	Qty Type	Total Qty
TT28305B6	A1	98L	RPP/CH2M Cogema	2002	Mech. Field Wlkdwns- 25 sheet @ 5 hours/ea(2engr) -250hr @ $90/hr.	7P300		BA22		22.50	$K	22,500.00
TT28305B6	A1	LC08B	RPP/CH2M - Plumbers & Pipefitters	2002	Mechanical Field Walkdowns- 25 sheet @ 5 hours/each	7P300		BA22		125.00	HRS	4,940.00
TT28305B6	A1	LC12B	RPP/CH2M - Other Crafts	2002	Mechanical Field Walkdowns- 25 sheet @ 5 hours/each	7P300		BA22		125.00	HRS	4,940.00
TT28305B6	A1	LP09E	RPP/CH2M - In Hygienists	2002	Mechanical Field Walkdowns- 25 sheet @ 5 hours/each	7P300		BA22		125.00	HRS	5,828.75
TT28305B6	A1	LR05B	RPP/CH2M - Nuclear Waste Process Ops	2002	Mechanical Field Walkdowns- 25 sheet @ 5 hours/each	7P300		BA22		125.00	HRS	5,270.00
TT28305B6	A1	LT05B	RPP/CH2M - Health Physics Techs	2002	Mechanical Field Walkdowns- 25 sheet @ 5 hours/each	7P300		BA22		125.00	HRS	4,963.75
TT28305B6	A2	98L	RPP/CH2M Cogema	2002	Elec Field Wlkdwns- 13 sheet @ 5 hours/ea(2 engr) -130hr @ $90/hr	7P300		BA22		11.70	$K	11,700.00
TT28305B6	A2	LC02B	RPP/CH2M - Electricians	2002	Electrical Field Walkdowns- 13 sheet @ 5 hours/each	7P300		BA22		65.00	HRS	2,733.90
TT28305B6	A2	LP09E	RPP/CH2M - In Hygienists	2002	Electrical Field Walkdowns-13 sheet @ 5 hours/each	7P300		BA22		65.00	HRS	3,030.95
TT28305B6	A2	LR05B	RPP/CH2M - Nuclear Waste Process Ops	2002	Electrical Field Walkdowns- 13 sheet @ 5 hours/each	7P300		BA22		65.00	HRS	2,740.40
TT28305B6	A2	LT05B	RPP/CH2M - Health Physics Techs	2002	Electrical Field Walkdowns- 13 sheet @ 5 hours/each	7P300		BA22		65.00	HRS	2,581.15
TT28305B6	A2	LT07B	RPP/CH2M - Instrument & Control Techs	2002	Electrical Field Walkdowns- 13 sheet @ 5 hours/each	7P300		BA22		65.00	HRS	2,741.05
TT28305B6	B	21L	RPP/CH2M PO Contracts	2002	Identify pump technology -320 total hr. - 40 hr CEES @ $90/hr	7P300		BA22		3.60	$K	3,600.00
TT28305B6	B	98L	RPP/CH2M Cogema	2002	Identify pump technology -320 total hr. - 120 hr CEES @ $90/hr	7P300		BA22		10.80	$K	10,800.00
TT28305B6	B	LE13E	RPP/CH2M - Other Engineers	2002	Identify pump technology -320 total hr. - 160 hr.	7P300		BA22		160.00	HRS	9,934.40
TT28305B6	C	98L	RPP/CH2M Cogema	2002	Prepare AGA -160 hr. @ $90/hr.	7P300		BA22		14.40	$K	14,400.00
TT28305B6	D	98L	RPP/CH2M Cogema	2002	Procurement Spec. 280 hr. @$90/hr	7P300		BA22		25.20	$K	25,200.00
TT28305B6	D	LE13E	RPP/CH2M - Other Engineers	2002	Procurement Spec. -80hr	7P300		BA22		80.00	HRS	4,967.20

Cost Estimating Input Sheet

Task Title:	Preconceptual Engineering	Revision Number:	b
Sched Act Id:	12.01.02	WBS Number:	5.02.01.02.07.12.01
Activity Owner:	SST Retrieval	PBS Number:	
Prepared By:	CE Hanson/AREngelman		

7.0 Notes:

Cost Estimating Input Sheet

Task Title:	Conceptual Design	Revision Number:	b
Sched Act Id:	12.01.03	WBS Number:	5.02.01.02.07.12.01
Activity Owner:	SST Retrieval	PBS Number:	
Prepared By:	CE Hanson/AREngelman		

1.0 Scope Description:

This activity includes conceptual planning, design, and engineering and the following specific tasks and will result in the deliverbles needed to satisfy Critical Decision-1 criteria per DOE Order 413.3

A. Draft Ventilation Analysis
B. Release Engineering Studies
C. Prepare, review, and release Level 2 Spec Rev 1
D. Prepare Conceptual Design Spec/Drawings
E. Prepare and release SDD
F. Draft Reliability, Maintenance, Availability Analysis
G. Prepare & Release Tank Specific Utility Analysis
H Prepare & Release Riser Analysis
I. Issue Final Project Execution Plan (PEP)
J. Perform Conceptual Design Review
K. Incorporate comments and release CDR
L. Prepare CD1 Package for approval
M. Update Test Objectives
N. Develop LDMM design concept

2.0 Estimating Assumptions and Exclusions:

A- HND will prepare existing drawing updates and new drawing preparation and will perform checking.
Existing equipment and installation drawings will be prepared as project drawings in the H-14 format by HND.
Drawings will be processed internally by CHG.
A - A revised cost estimate will be included in the Conceptual Design Report (CDR). Additional estimating resources will be available by the project team via the Project Management task.
A- Subcontractor rates based on expectation of using a combination of principle and senior engineer

E-Senior management review and approval manhours are excluded from this estimate. They are carried in their respective management budgets elsewhere.
E- Process engineering support is excluded from this activity. It is included in activity 12.01.06.
E- QA reviews are excluded from this activity. They are included in activity 12.01.07.
E- Safety reviews are excluded from this activity. They are included in 12.08.02
E- Environmental reviews are excluded from this activity. They are included in activtity 12.07.01.

3.0 Basis of Estimate:

The basis of this estimate is the following activities and resource quanitfication based on experienced engineering judgement using tank farm experience and the estimate prepared in RPP7526, Rev 1., "Preliminary Engineering Report for the 241-S-112 Retrieval System" (PER). This work is to be performed by CHG engineering as well as through subcontractor support. Specific resource assumptions are included in the resource detail information. Hours includes all efforts including preparation, review, approval, and issuing cycles. For ECNs, hours include issuing the ECN; incorporating all comments; preparation of USQ screens; and releasing the ECN.

A. Draft Ventilation Analysis - 180 hr.
B. Release Engineering Studies - 120 hr.
C. Prepare, review , and release Level 2 Spec Rev 1 - 220 hr.
D. Prepare Conceptual Design Spec/Drawings - 140 hr.
E. Prepare and release SDD - 140 hr.
F. Draft Reliability, Maintenance, Availability Analysis - 110 hr.
G. Prepare & Release Tank Specific Utility Analysis - 110 hr.
H. Prepare & Release Riser Analysis - 140 hr.
I. Issue Final Project Execution Plan (PEP) - 230 hr.
J. Perform Conceptual Design Review - 160 hr.
K. Incorporate comments and release CDR - 80 hr.
L. Prepare CD1 Package for approval - 60 hr.
M. Update Test Objectives - 50 hr.
N. Develop LDMM design concept - HND $70K

4.0 Estimate Stage and Method:

Preliminary/Analogy

Cost Estimating Input Sheet

Task Title:	Conceptual Design	Revision Number:	b
Sched Act Id:	12.01.03	WBS Number:	5.02.01.02.07.12.01
Activity Owner:	SST Retrieval	PBS Number:	
Prepared By:	CE Hanson/AREngelman		

5.0 Legal Drivers/Reference Documents:

Tri-Party Agreement Milestone M-45-03C, "Complete Full Scale Saltcake Waste Retrieval Technology Demonstration at S-112"
DOE Order 413.3, Program and Project Management for the Acquisition of Capital Assets,

RPP-7526, Preliminary Engineering Report for the 241-S-112 Retrieval System

RPP-8791, PRELIMINARY PROJECT EXECUTION PLAN FOR TANK 241-S-112 SALTCAKE WASTE RETRIEVAL TECHNOLOGY DEMONSTRATION

RPP-7825, Single-Shell Tank S-112 Full Scale Saltcake Waste Retrieval technology Demonstration Functions and Requirements

S-112 Design and Engineering

Cost Estimating Input Sheet

Task Title:	Conceptual Design	Revision Number:	b
Sched Act Id:	12.01.03	WBS Number:	5.02.01.02.07.12.01
Activity Owner:	SST Retrieval	PBS Number:	
Prepared By:	CE Hanson/AREngelman		

P3 Activity	Sub Task	P3 Res Code	ResourceType	Fiscal Year	SubtaskDescription	Org Code	Seq Num	COA	Note Ref	Budget Qty	Qty Type	Total Qty
TT28305B7	A	21L	RPP/CH2M PO Contracts	2002	Draft Ventilation Analysis - 180 total hr. - 80 hr. CEES @ $90/hr.	7P300		BA22		7.20	$K	7,200.00
TT28305B7	A	98L	RPP/CH2M Cogema	2002	Draft Ventilation Analysis - 180 total hr. - 40 hr. @ $90/hr.	7P300		BA22		3.60	$K	3,600.00
TT28305B7	A	LE13E	RPP/CH2M - Other Engineers	2002	Draft Ventilation Analysis - 180 total hr. - 60 hr.	7P300		BA22		60.00	HRS	3,725.40
TT28305B7	B	21L	RPP/CH2M PO Contracts	2002	Release Engineering Studies - 120 total hr. - 20 hr. CEES @ $90/hr	7P300		BA22		1.80	$K	1,800.00
TT28305B7	B	98L	RPP/CH2M Cogema	2002	Release Engineering Studies - 120 total hr. - 60 hr. @ $90/hr	7P300		BA22		5.40	$K	5,400.00
TT28305B7	B	LE13E	RPP/CH2M - Other Engineers	2002	Release Engineering Studies - 120 total hr. - 40 hr.	7P300		BA22		40.00	HRS	2,483.60
TT28305B7	C	21L	RPP/CH2M PO Contracts	2002	Prepare/release Level 2 Spec Rev 1 - 220 total hr. - 40 hr. CEES @ $90/hr.	7P300		BA22		3.60	$K	3,600.00
TT28305B7	C	98L	RPP/CH2M Cogema	2002	Prepare/release Level 2 Spec Rev 1 - 220 total hr. - 60 hr. @ $90/hr.	7P300		BA22		5.40	$K	5,400.00
TT28305B7	C	LE13E	RPP/CH2M - Other Engineers	2002	Prepare/ release Level 2 Spec Rev 1 - 220 total hr - 120hr.	7P300		BA22		120.00	HRS	7,450.80
TT28305B7	D	21L	RPP/CH2M PO Contracts	2002	Prepare CD Spec/Drawings - 140total hr.-40 hr CEES @ $90/hr.	7P300		BA22		3.60	$K	3,600.00
TT28305B7	D	21L	RPP/CH2M PO Contracts	2002	Prepare CD Spec/Drawings -HND	7P300		BA22		206.00	$K	206,000.00
TT28305B7	D	98L	RPP/CH2M Cogema	2002	Prepare CD Spec/Drawings - 140total hr.-60 hr @ $90/hr.	7P300		BA22		5.40	$K	5,400.00
TT28305B7	D	LE13E	RPP/CH2M - Other Engineers	2002	Prepare Conceptual Design Spec/Drawings - 140total hr.-- 40 hr.	7P300		BA22		40.00	HRS	2,483.60
TT28305B7	E	21L	RPP/CH2M PO Contracts	2002	Prepare and release SDD - 140 total hr. -20 hr CEES @ $90/hr.	7P300		BA22		1.80	$K	1,800.00
TT28305B7	E	98L	RPP/CH2M Cogema	2002	Prepare and release SDD - 140 total hr. -100 hr @ $90/hr.	7P300		BA22		9.00	$K	9,000.00
TT28305B7	E	LE13E	RPP/CH2M - Other Engineers	2002	Prepare and release SDD - 140 total hr. 20 hr.	7P300		BA22		20.00	HRS	1,241.80
TT28305B7	F	21L	RPP/CH2M PO Contracts	2002	Draft RMAA- 110 total hr. -10 hr CEES @ $90/hr.	7P300		BA22		0.90	$K	900.00
TT28305B7	F	98L	RPP/CH2M Cogema	2002	Draft RMAA - 110 total hr. -80 hr @ $90/hr.	7P300		BA22		7.20	$K	7,200.00
TT28305B7	F	LE13E	RPP/CH2M - Other Engineers	2002	Draft RMAA - 110 total hr. -20 hr.	7P300		BA22		20.00	HRS	1,241.80
TT28305B7	G	21L	RPP/CH2M PO Contracts	2002	Prepare/Release TSUA - 110 total hr. - 10 hr CEES @ $90/hr.	7P300		BA22		0.90	$K	900.00
TT28305B7	G	98L	RPP/CH2M Cogema	2002	Prepare/Release TSUA - 110 total hr. - 80hr. @ $90/hr	7P300		BA22		7.20	$K	7,200.00
TT28305B7	G	LE13E	RPP/CH2M - Other Engineers	2002	Prepare/Release TSUA -110 total hr. 20hr	7P300		BA22		20.00	HRS	1,241.80
TT28305B7	H	21L	RPP/CH2M PO Contracts	2002	Prepare & Release Riser Analysis - 140 total hr. - 40 hr CEES @ $90/hr.	7P300		BA22		3.60	$K	3,600.00
TT28305B7	H	98L	RPP/CH2M Cogema	2002	Prepare & Release Riser Analysis - 140 total hr. - 40 hr @ $90/hr.	7P300		BA22		3.60	$K	3,600.00
TT28305B7	H	LE13E	RPP/CH2M - Other Engineers	2002	Prepare & Release Riser Analysis - 140 total hr. -60 hr	7P300		BA22		60.00	HRS	3,725.40
TT28305B7	I	21L	RPP/CH2M PO Contracts	2002	Issue Final Project Execution Plan (PEP) - 230 total hr. -40 hr CEES @	7P300		BA22		3.60	$K	3,600.00

Cost Estimating Input Sheet

Task Title:	Conceptual Design	Revision Number:	b
Sched Act Id:	12.01.03	WBS Number:	5.02.01.02.07.12.01
Activity Owner:	SST Retrieval	PBS Number:	
Prepared By:	CE Hanson/AREngelman		

P3 Activity	Sub Task	P3 Res Code	ResourceType	Fiscal Year	SubtaskDescription	Org Code	Seq Num	COA	Note Ref	Budget Qty	Qty Type	Total Qty
TT28305B7	I	98L	RPP/CH2M Cogema	2002	Issue Final Project Execution Plan (PEP) - 230 total hr. -150 hr COGEMA	7P300		BA22		13.50	$K	13,500.00
TT28305B7	I	LE13E	RPP/CH2M - Other Engineers	2002	Issue Final Project Execution Plan (PEP) - 230 total hr. -40 hr.	7P300		BA22		40.00	HRS	2,483.60
TT28305B7	J	21L	RPP/CH2M PO Contracts	2002	Perform Conceptual Design Review - 160 total hr. -40 hr CEES @ $90/hr.	7P300		BA22		3.60	$K	3,600.00
TT28305B7	J	98L	RPP/CH2M Cogema	2002	Perform Conceptual Design Review - 160 total hr. -40 hr @ $90/hr.	7P300		BA22		3.60	$K	3,600.00
TT28305B7	J	LE13E	RPP/CH2M - Other Engineers	2002	Perform Conceptual Design Review - 160 total hr. -80 hr.	7P300		BA22		80.00	HRS	4,967.20
TT28305B7	J	LM03E	RPP/CH2M - Project & Program Mgrs	2002	Perform Conceptual Design Review-op/radcon mgmt	7P300		BA22		60.00	HRS	4,137.00
TT28305B7	K	21L	RPP/CH2M PO Contracts	2002	Incorporate comments and release CDR -80 total hr. -20 hr. CEES @	7P300		BA22		1.80	$K	1,800.00
TT28305B7	K	98L	RPP/CH2M Cogema	2002	Incorporate comments and release CDR - 80 total hr. -40 hr. @ $90/hr	7P300		BA22		3.60	$K	3,600.00
TT28305B7	K	LE13E	RPP/CH2M - Other Engineers	2002	Incorporate comments and release CDR - 80 total hr. -20 hr.	7P300		BA22		20.00	HRS	1,241.80
TT28305B7	L	21L	RPP/CH2M PO Contracts	2002	Prepare CD1 Package for approval - 60 total hr. -20 hr CEES @ $90/hr	7P300		BA22		1.80	$K	1,800.00
TT28305B7	L	98L	RPP/CH2M Cogema	2002	Prepare CD1 Package for approval - 60 total hr. -20 hr @ $90/hr	7P300		BA22		1.80	$K	1,800.00
TT28305B7	L	LE13E	RPP/CH2M - Other Engineers	2002	Prepare CD1 Package for approval - 60 total hr. -20 hr.	7P300		BA22		20.00	HRS	1,241.80
TT28305B7	M	21L	RPP/CH2M PO Contracts	2002	Update Test Objectives - 50 total hr. - 10 hr. CEES @ $90/hr	7P300		BA22		0.90	$K	900.00
TT28305B7	M	98L	RPP/CH2M Cogema	2002	Update Test Objectives - 50 total hr. - 20 hr. @ $90/hr	7P300		BA22		1.80	$K	1,800.00
TT28305B7	M	LE13E	RPP/CH2M - Other Engineers	2002	Update Test Objectives - 50 total hr. - 20 hr.	7P300		BA22		20.00	HRS	1,241.80
TT28305B7	N	21L	RPP/CH2M PO Contracts	2002	Develop LDMM design concepts -HND	7P300		BA22		70.00	$K	70,000.00

Cost Estimating Input Sheet

Task Title:	Conceptual Design	Revision Number:	b
Sched Act Id:	12.01.03	WBS Number:	5.02.01.02.07.12.01
Activity Owner:	SST Retrieval	PBS Number:	
Prepared By:	CE Hanson/AREngelman		

7.0 Notes:

Cost Estimating Input Sheet

Task Title:	Preliminary Design	Revision Number:	b
Sched Act Id:	12.01.04	WBS Number:	5.02.01.02.07.12.01
Activity Owner:	SST Retrieval	PBS Number:	
Prepared By:	CE Hanson/AREngelman		

1.0 Scope Description:

This activity includes preliminary design and engineering and the following specific tasks and will result in the deliverables needed to satisfy Critical Decision - 2 criteria per DOE Order 413.3

A. Design Ventilation system
B.Prepare Process Optimization (pumping) Analysis
C. Water Distribution System
D. Pump Design
E..Prepare & Release Final Ventilation Analysis
F. Design utilities electircal & instrumentation systems
G. Design Monitoring & Control systems
H. Evaluate Retrieval Scenarios
I. ID Lead procurements & prepare specs.
J. Prepare & release draft hydraulic analysis
K. Prepare Test & Evaluation Plan
L. Prepare preliminary ICDs
M. Complete final Reliability, Maintenance, Availability Analysis
N Prepare Draft Component Stress Analysis
O. Final selection of Ex-Tank LDMM Technology
P. S Farm Transfer System Design
Q. Retrieval System Design
R. Prepare/review/release final Level 2 Specs.
S. Prepare/Release Final Recirculation Cost Benefit Analysis
T. Perform Plant Forces Work Review
U.Prepare & Release Corrosion Analysis
V. Conduct Preliminary design Review
W.Prepare detailed cost/schedule baseline
X. A/E cost estimate preparation
Y. Issue/Release preliminary design
Z. Prepare, negotiate Procurement Spec. for Final Design and award contract
Z1.Prepare CD2 package for approval

2.0 Estimating Assumptions and Exclusions:

A- HND will prepare existing drawing update and new drawing preparation and will perform checking. Existing equipment and installation drawings will be prepared as project drawings in the H-14 format by HND. Drawings will be processed internally by CHG.
A- Subcontractor rates based on expectation of using a combination of principle and senior engineer

E-Senior management review and approval manhours are excluded from this estimate. They are carried in their respective management budgets elsewhere.
E- Process engineering support is excluded from this activity. It is included in activity 12.01.06.
E- QA reviews are excluded from this activity. They are included in activity 12.01.07.
E- Safety reviews are excluded from this activity. They are included in 12.08.02
E- Environmental reviews are excluded from this activity. They are included in activtity 12.07.01.
E- ECN preparation is included in 12.01.06

3.0 Basis of Estimate:

The basis of this estimate is the following activities and resource quanitfication based on experienced engineering judgement using tank farm experience and the estimate prepared in RPP7526, Rev 1, "Preliminary Engineering Report for the 241-S-112 Retrieval System" (PER). This work is to be performed by CHG engineering as well as through subcontractor support. Specific resource assumptions are included in the resource detail information. Hours includes all efforts including preparation, review, approval, and issuing cycles. For For ECNs, hours include issuing the ECN; incorporating all comments; preparation of USQ screens; and releasing the ECN.
It is assumed that 40% design will be complete during this design phase:

A. Design Ventilation system -PER
B.Prepare Process Optimization (pumping) Analysis - 360 hr.
C. Water Distribution System -PER
D. Pump Design - HND $50K based on similar work
E..Prepare & Release Final Ventilation Analysis - 280 hr.
F. Design utilities electircal & instrumentation systems -PER
G. Design Monitoring & Control systems - PER
H. Evaluate Retrieval Scenarios - 340 hr.
I. ID Lead procurements & prepare specs. - 280 hr.
J. Prepare & release draft hydraulic analysis - 400 hr.
K. Prepare Test & Evaluation Plan - 420 hr.

Cost Estimating Input Sheet

Task Title:	Preliminary Design	Revision Number:	b
Sched Act Id:	12.01.04	WBS Number:	5.02.01.02.07.12.01
Activity Owner:	SST Retrieval	PBS Number:	
Prepared By:	CE Hanson/AREngelman		

L. Prepare preliminary ICDs - 200 hr.
M. Complete final Reliability, Maintenance, Availability Analysis - 120 hr.
N Prepare Draft Component Stress Analysis - 60hr.
O. Final selection of Ex-Tank LDMM Technology - 500 hr. and HND support $300K
P. S Farm Transfer System Design -PER
Q. Retrieval System Design -PER
R. Prepare/review/release final Level 2 Specs. - 320 hr.
S. Prepare/Release Final Recirculation Cost Benefit Analysis - 400 hr.
T. Perform Plant Forces Work Review - 180 hr.
U.Prepare & Release Corrosion Analysis - 280 hr.
V. Conduct Preliminary design Review - 440 hr. and HND $30K
W.Prepare detailed cost/schedule baseline - 220 hr.
X. A/E cost estimate preparation - PER
Y. Issue/Release preliminary design - 100 hr. and HND $50K
Z. Prepare, negotiate Procurement Spec. for Final Design and award contract -100 hr.
Z1.Prepare CD2 package for approval - 60 hr.

4.0 Estimate Stage and Method:

Preliminary/Analogy

5.0 Legal Drivers/Reference Documents:

Tri-Party Agreement Milestone M-45-03C, "Complete Full Scale Saltcake Waste Retrieval Technology Demonstration at S-112"
DOE Order 413.3, Program and Project Management for the Acquisition of Capital Assets,

RPP-7526, Preliminary Engineering Report for the 241-S-112 Retrieval System

RPP-8791, PRELIMINARY PROJECT EXECUTION PLAN FOR TANK 241-S-112 SALTCAKE WASTE RETRIEVAL TECHNOLOGY DEMONSTRATION

RPP-7825, Single-Shell Tank S-112 Full Scale Saltcake Waste Retrieval technology Demonstration Functions and Requirements

Cost Estimating Input Sheet

Task Title:	Preliminary Design	Revision Number:	b
Sched Act Id:	12.01.04	WBS Number:	5.02.01.02.07.12.01
Activity Owner:	SST Retrieval	PBS Number:	
Prepared By:	CE Hanson/AREngelman		

P3 Activity	Sub Task	P3 Res Code	ResourceType	Fiscal Year	SubtaskDescription	Org Code	Seq Num	COA	Note Ref	Budget Qty	Qty Type	Total Qty
TT28305BD	A	21L	RPP/CH2M PO Contracts	2002	Ventilation System Design - HND	7P300		BA31	1	15.00	$K	15,000.00
TT28305BD	A	LE13E	RPP/CH2M - Other Engineers	2002	Ventilation System Design - ECN review/approve	7P300		BA31		40.00	HRS	2,483.60
TT28305BD	A	LM03E	RPP/CH2M - Project & Program Mgrs	2002	Ventilation System Design - ECN review/approve (Ops/RadCon Mgr)	7P300		BA31		16.00	HRS	1,103.20
TT28305BD	B	98L	RPP/CH2M Cogema	2002	Process Optimization Analysis - 360 total hr -200 hr Cogema @ $90/hr.	7P300		BA31		18.00	$K	18,000.00
TT28305BD	B	LE13E	RPP/CH2M - Other Engineers	2002	Process Optimization Analysis - 360 total hr -160hr	7P300		BA31		160.00	HRS	9,934.40
TT28305BD	C	21L	RPP/CH2M PO Contracts	2002	Water Distribution System -HND	7P300		BA31	1	118.00	$K	118,000.00
TT28305BD	C	21L	RPP/CH2M PO Contracts	2002	Water Distribution System - 360total hr.-160 hr CEES @ $90/hr	7P300		BA31		14.40	$K	14,400.00
TT28305BD	C	98L	RPP/CH2M Cogema	2002	Water Distribution System - 360total hr.-160 hr @ $90/hr	7P300		BA31		14.40	$K	14,400.00
TT28305BD	C	LE13E	RPP/CH2M - Other Engineers	2002	Water Distribution System - 360total hr.-40 hr	7P300		BA31		40.00	HRS	2,483.60
TT28305BD	C	LE13E	RPP/CH2M - Other Engineers	2002	Water Distribution System -ECN review/approve	7P300		BA31		20.00	HRS	1,241.80
TT28305BD	C	LM03E	RPP/CH2M - Project & Program Mgrs	2002	Water Distribution System -ECN review/approve(Ops/RadCon Mgr)	7P300		BA31		4.00	HRS	275.80
TT28305BD	D	21L	RPP/CH2M PO Contracts	2002	Pump design -HND	7P300		BA31		50.00	$K	50,000.00
TT28305BD	D	LE13E	RPP/CH2M - Other Engineers	2002	Pump design ECN review/approve	7P300		BA31		80.00	HRS	4,967.20
TT28305BD	D	LM03E	RPP/CH2M - Project & Program Mgrs	2002	Pump design ECN review/approve - (Ops/RadCon Mgr)	7P300		BA31		40.00	HRS	2,758.00
TT28305BD	E	21L	RPP/CH2M PO Contracts	2002	Final Ventilation Analysis - 280 hr. total -80hr CEES @ $90/hr.	7P300		BA31		7.20	$K	7,200.00
TT28305BD	E	98L	RPP/CH2M Cogema	2002	Final Ventilation Analysis - 280 hr. total -160hr @ $90/hr.	7P300		BA31		14.40	$K	14,400.00
TT28305BD	E	LE13E	RPP/CH2M - Other Engineers	2002	Final Ventilation Analysis - 280 hr. total - 40hr	7P300		BA31		40.00	HRS	2,483.60
TT28305BD	F	21L	RPP/CH2M PO Contracts	2002	Utilities Design - HND	7P300		BA31	1	55.00	$K	55,000.00
TT28305BD	F	LE13E	RPP/CH2M - Other Engineers	2002	Utilities Design - ECN review/approve	7P300		BA31		40.00	HRS	2,483.60
TT28305BD	F	LM03E	RPP/CH2M - Project & Program Mgrs	2002	Utilities Design - ECN review/approve - (Ops/RadCon Mgr)	7P300		BA31		8.00	HRS	551.60
TT28305BD	G	21L	RPP/CH2M PO Contracts	2002	Monitoring I&C System -HND	7P300		BA31	1	85.00	$K	85,000.00
TT28305BD	H	21L	RPP/CH2M PO Contracts	2002	Evaluate Retrieval Scenarios - 340 total hr. - 100 hr. CEES @ $90/hr.	7P300		BA31		9.00	$K	9,000.00
TT28305BD	H	98L	RPP/CH2M Cogema	2002	Evaluate Retrieval Scenarios - 340 total hr. - 200 hr. @ $90/hr.	7P300		BA31		18.00	$K	18,000.00
TT28305BD	H	LE13E	RPP/CH2M - Other Engineers	2002	Evaluate Retrieval Scenarios - 340 total hr. - 40 hr.	7P300		BA31		40.00	HRS	2,483.60
TT28305BD	I	21L	RPP/CH2M PO Contracts	2002	LL procurement specs. - 280 total hr. - 40 hr CEES @ $90/hr.	7P300		BA31		3.60	$K	3,600.00
TT28305BD	I	98L	RPP/CH2M Cogema	2002	LL procurement specs - 280 total hr. - 200 hr @ $90/hr.	7P300		BA31		18.00	$K	18,000.00

Cost Estimating Input Sheet

Task Title:	Preliminary Design	Revision Number:	b
Sched Act Id:	12.01.04	WBS Number:	5.02.01.02.07.12.01
Activity Owner:	SST Retrieval	PBS Number:	
Prepared By:	CE Hanson/AREngelman		

P3 Activity	Sub Task	P3 Res Code	ResourceType	Fiscal Year	SubtaskDescription	Org Code	Seq Num	COA	Note Ref	Budget Qty	Qty Type	Total Qty
TT28305BD	I	LE13E	RPP/CH2M - Other Engineers	2002	LL procurement specs. -280 total hr. - 40	7P300		BA31		40.00	HRS	2,483.60
TT28305BD	J	21L	RPP/CH2M PO Contracts	2002	Hydraulic analysis - 400 total hr. - 40 Hr. CEES @ $90/hr	7P300		BA31		3.60	$K	3,600.00
TT28305BD	J	98L	RPP/CH2M Cogema	2002	Hydraulic analysis - 400 total hr. - 300 Hr. @ $90/hr	7P300		BA31		27.00	$K	27,000.00
TT28305BD	J	LE13E	RPP/CH2M - Other Engineers	2002	Hydraulic analysis - 400 total hr. - 60	7P300		BA31		60.00	HRS	3,725.40
TT28305BD	K	21L	RPP/CH2M PO Contracts	2002	Test & Evaluation Plan - 420 total hr. - 60 hr CEES @ $90/hr	7P300		BA31		5.40	$K	5,400.00
TT28305BD	K	98L	RPP/CH2M Cogema	2002	Test & Evaluation Plan - 420 total hr. - 300 hr @ $90/hr	7P300		BA31		27.00	$K	27,000.00
TT28305BD	K	LE13E	RPP/CH2M - Other Engineers	2002	Test & Evaluation Plan - 420 total hr. - 60 hr.	7P300		BA31		60.00	HRS	3,725.40
TT28305BD	L	98L	RPP/CH2M Cogema	2002	Prepare preliminary ICDs - 200 hr. @ $90/hr.	7P300		BA31		18.00	$K	18,000.00
TT28305BD	M	98L	RPP/CH2M Cogema	2002	Complete final RMAA - 120 total hr. - 100 hr @ $90/hr	7P300		BA31		9.00	$K	9,000.00
TT28305BD	M	LE13E	RPP/CH2M - Other Engineers	2002	Complete final RMAA - 120 total hr. - - 20 hr.	7P300		BA31		20.00	HRS	1,241.80
TT28305BD	N	98L	RPP/CH2M Cogema	2002	Prepare Draft Component Stress Analysis - 60 hr @ $90/hr	7P300		BA31		5.40	$K	5,400.00
TT28305BD	O	21L	RPP/CH2M PO Contracts	2002	Final selection of Ex-Tank LDMM Technology - 500 total hr. -200 hr	7P300		BA31		18.00	$K	18,000.00
TT28305BD	O	21L	RPP/CH2M PO Contracts	2002	Final selection of Ex-Tank LDMM Technology - HND	7P300		BA31		300.00	$K	300,000.00
TT28305BD	O	98L	RPP/CH2M Cogema	2002	Final selection of Ex-Tank LDMM Technology - 500 total hr. -200 hr @	7P300		BA31		18.00	$K	18,000.00
TT28305BD	O	LE13E	RPP/CH2M - Other Engineers	2002	Final selection of Ex-Tank LDMM Technology - 500 total hr. --100hr	7P300		BA31		100.00	HRS	6,209.00
TT28305BD	P	21L	RPP/CH2M PO Contracts	2002	S Farm Transfer System Design -HND	7P300		BA31	1	35.00	$K	35,000.00
TT28305BD	P	LE13E	RPP/CH2M - Other Engineers	2002	S Farm Transfer System Design - ECN review/approve	7P300		BA31		100.00	HRS	6,209.00
TT28305BD	P	LM03E	RPP/CH2M - Project & Program Mgrs	2002	S Farm Transfer System Design - ECN review/approve (Ops/RadCon Mgr)	7P300		BA31		30.00	HRS	2,068.50
TT28305BD	Q	21L	RPP/CH2M PO Contracts	2002	Retrieval System Design -HND	7P300		BA31	1	52.00	$K	52,000.00
TT28305BD	Q	LE13E	RPP/CH2M - Other Engineers	2002	Retrieval System Design -ECN review/approve	7P300		BA31		60.00	HRS	3,725.40
TT28305BD	Q	LM03E	RPP/CH2M - Project & Program Mgrs	2002	Retrieval System Design -ECN review/approve (Ops/RadCon Mgr)	7P300		BA31		15.00	HRS	1,034.25
TT28305BD	R	21L	RPP/CH2M PO Contracts	2002	Final Level 2 Specs. - 320 total hr. -40 hr CEES @ $ 90/hr	7P300		BA31		3.60	$K	3,600.00
TT28305BD	R	98L	RPP/CH2M Cogema	2002	Final Level 2 Specs. - 320 total hr. - 200 hr @ $ 90/hr	7P300		BA31		18.00	$K	18,000.00
TT28305BD	R	LE13E	RPP/CH2M - Other Engineers	2002	Final Level 2 Specs. - 320 total hr. -80 hr.	7P300		BA31		80.00	HRS	4,967.20
TT28305BD	S	21L	RPP/CH2M PO Contracts	2004	Final Recirculation Cost Benefit Analysis - 400 total hr. - 160 hr CEES	7P300		BA31		14.40	$K	14,400.00
TT28305BD	S	98L	RPP/CH2M Cogema	2002	Final Recirculation Cost Benefit Analysis - 400 total hr. - 200 hr @	7P300		BA31		18.00	$K	18,000.00

Cost Estimating Input Sheet

Task Title:	Preliminary Design	Revision Number:	b
Sched Act Id:	12.01.04	WBS Number:	5.02.01.02.07.12.01
Activity Owner:	SST Retrieval	PBS Number:	
Prepared By:	CE Hanson/AREngelman		

P3 Activity	Sub Task	P3 Res Code	ResourceType	Fiscal Year	SubtaskDescription	Org Code	Seq Num	COA	Note Ref	Budget Qty	Qty Type	Total Qty
TT28305BD	S	LE13E	RPP/CH2M - Other Engineers	2004	Final Recirculation Cost Benefit Analysis - 400 total hr. - 40 hr.	7P300		BA31		40.00	HRS	2,483.60
TT28305BD	T	98L	RPP/CH2M Cogema	2002	Plant Forces Work Review - 180 total hr. - 160 hr @ $90/hr.	7P300		BA31		14.40	$K	14,400.00
TT28305BD	T	LE13E	RPP/CH2M - Other Engineers	2002	Plant Forces Work Review - 180 total hr. - 20 hr.	7P300		BA31		20.00	HRS	1,241.80
TT28305BD	U	21L	RPP/CH2M PO Contracts	2004	Corrosion Analysis - 280 total hr. - 80 hr CEES @ $90/hr.	7P300		BA31		7.20	$K	7,200.00
TT28305BD	U	LE13E	RPP/CH2M - Other Engineers	2004	Corrosion Analysis - 280 total hr. - 200 hr	7P300		BA31		200.00	HRS	12,418.00
TT28305BD	V	21L	RPP/CH2M PO Contracts	2002	Preliminary design Review - 440 total hr. - 100 hr CEES @ $90/hr.	7P300		BA31		9.00	$K	9,000.00
TT28305BD	V	21L	RPP/CH2M PO Contracts	2002	Preliminary Design Review -HND	7P300		BA31		30.00	$K	30,000.00
TT28305BD	V	98L	RPP/CH2M Cogema	2002	Preliminary design Review - 440 total hr. - 200 hr @ $90/hr.	7P300		BA31		18.00	$K	18,000.00
TT28305BD	V	LE13E	RPP/CH2M - Other Engineers	2002	Preliminary design Review - 440 total hr. - 120 hr	7P300		BA31		120.00	HRS	7,450.80
TT28305BD	V	LM03E	RPP/CH2M - Project & Program Mgrs	2002	Preliminary Design Review -Ops & RadCon Mgr.	7P300		BA31		40.00	HRS	2,758.00
TT28305BD	W	21L	RPP/CH2M PO Contracts	2002	Detailed cost/schedule baseline - 220 total hr. - 80 hr. CEES @ $90/hr.	7P300		BA31		7.20	$K	7,200.00
TT28305BD	W	98L	RPP/CH2M Cogema	2002	Detailed cost/schedule baseline - 220 total hr. - 80 hr. @ $90/hr.	7P300		BA31		7.20	$K	7,200.00
TT28305BD	W	LE13E	RPP/CH2M - Other Engineers	2002	Detailed cost/schedule baseline - 220 total hr. - 60 hr.	7P300		BA31		60.00	HRS	3,725.40
TT28305BD	X	21L	RPP/CH2M PO Contracts	2002	Cost Estimates & Schedule - HND	7P300		BA31	1	50.00	$K	50,000.00
TT28305BD	Y	21L	RPP/CH2M PO Contracts	2002	Issue preliminary design - HND	7P300		BA31		50.00	$K	50,000.00
TT28305BD	Y	98L	RPP/CH2M Cogema	2002	Release preliminary design - 100 total hr. - 80 hr @ $90/hr	7P300		BA31		7.20	$K	7,200.00
TT28305BD	Y	LE13E	RPP/CH2M - Other Engineers	2002	Release preliminary design - 100 total hr. - 20 hr.	7P300		BA31		20.00	HRS	1,241.80
TT28305BD	Z	LE13E	RPP/CH2M - Other Engineers	2002	Procurement Spec. for Final Design and award contract - 100 hr	7P300		BA31		100.00	HRS	6,209.00
TT28305BD	Z1	21L	RPP/CH2M PO Contracts	2002	Prepare CD2 package for approval - 60 total hr. - 20 hr. CEES @ $90/hr.	7P300		BA31		1.80	$K	1,800.00
TT28305BD	Z1	98L	RPP/CH2M Cogema	2002	Prepare CD2package for approval - 60 total hr. - 20 hr. @ $90/hr.	7P300		BA31		1.80	$K	1,800.00
TT28305BD	Z1	LE13E	RPP/CH2M - Other Engineers	2002	Prepare CD2package for approval - 60 total hr. - 20 hr.	7P300		BA31		20.00	HRS	1,241.80

Cost Estimating Input Sheet

Task Title:	Preliminary Design	Revision Number:	b
Sched Act Id:	12.01.04	WBS Number:	5.02.01.02.07.12.01
Activity Owner:	SST Retrieval	PBS Number:	
Prepared By:	CE Hanson/AREngelman		

7.0 Notes:

1. A/E contractor is HND. Basis for the estimate is contained in RPP 7526, Rev 1 "Preliminary Engineering Report for the 241-S-112 Retrieval System" (PER).

Cost Estimating Input Sheet

Task Title:	Final Design	Revision Number:	b
Sched Act Id:	12.01.05	WBS Number:	5.02.01.02.07.12.01
Activity Owner:	SST Retrieval	PBS Number:	
Prepared By:	CE Hanson/AREngelman		

1.0 Scope Description:

This activity includes final design and engineering and the following specific tasks and will result in the deliverables needed to satisfy Critical Decision - 3 criteria per DOE Order 413.3

A. Design Ventilation system
B. Design Water Distribution system
C. Pump design
D. Design utilities electrical & instrumentation systems
E. Design Monitoring & Control systems
F. A/E final design report
G. Design LDMM
H. Perform Final Design Review
I. Prepare, negotiate Procurement Spec. for Final Design and award contract
J. Prepare & Release Final Process Control Plan
K. Prepare & Release Final Hydraulic Analysis
L. Prepare & Release Dome Load Analysis
M. Release Final Design
N. Prepare CD3 Package for Approval
O. Incorporate Redlines into Drawings & Release
P. Prepare/release requirements doc
Q. S Farm Transfer System Design
R. Retrieval Design
S. Prepare & Release final Component Stress Analysis

2.0 Estimating Assumptions and Exclusions:

A- HND will prepare existing drawing update and new drawing preparation and will perform checking. Existing equipment and installation drawings will be prepared as project drawings in the H-14 format by HND. Drawings will be processed internally by CHG.
A- CD-2 approval has been granted by ORP. Inherent in this assumption is the fact that ORP has also approved the F&R document.
A- Subcontractor rates based on expectation of using a combination of principle and senior engineer

E-Senior management review and approval manhours are excluded from this estimate. They are carried in their respective management budgets elsewhere.
E- Process engineering support is excluded from this activity. It is included in activity 12.01.06.
E- QA reviews are excluded from this activity. They are included in activity 12.01.07.
E- Safety reviews are excluded from this activity. They are included in 12.08.02
E- Environmental reviews are excluded from this activity. They are included in activtity 12.07.01.
E- ECN preparation is included in 12.01.06

3.0 Basis of Estimate:

The basis of this estimate is the following activities and resource quanitfication based on experienced engineering judgement using tank farm experience and the estimate prepared in RPP7526, "Preliminary Engineering Report for the 241-S-112 Retrieval System" (PER). The CHG engineering work is to be performed by CHG engineering as well as through subcontractor support. Specific resource assumptions are included in the resource detail information. Hours includes all efforts including preparation, review, approval, and issuing cycles. For ECNs, hours include issuing the ECN; incorporating all comments; preparation of USQ screens; and releasing the ECN. It is assumed that the remaining 60% design will be complete during this design phase.

A. Design Ventilation system -PER
B. Design Water Distribution -PER
C. Pump design - HND $100K - based on similar work
D. Design utilities electircal & instrumentation systems - PER
E. Design Monitoring & Control systems - PER
F. A/E final design report - PER
G. Design LDMM - HND
The LDMM estimate is a ROM based on expert engineering judgement. LDMM technologies are being developed. The assumption for this estimate is that an in tank and extank LDMM will be required. The in tank scope/estimate is based on C-104. The ex tank is considerably more uncertain. The PITT (partitioning interwell tracer test) technology was selected as the basis for this estimate because it appears promising. The technology includes drilling 2-4 wells directly around the tank; injecting a trace gas on one side; and analyzing changes in the gas emitted on the other side to determine ground moisture content.

H. Perform Final Design Review - 480 hr.
I. Prepare, negotiate Procurement Spec. for Final Design and award contract - 120 hr.
J. Prepare & Release Final Process Control Plan -80 hr.
K. Prepare & Release Final Hydraulic Analysis - 140 hr.
L. Prepare & Release Dome Load Analysis - 120 hr

Cost Estimating Input Sheet

Task Title:	Final Design	Revision Number:	b
Sched Act Id:	12.01.05	WBS Number:	5.02.01.02.07.12.01
Activity Owner:	SST Retrieval	PBS Number:	
Prepared By:	CE Hanson/AREngelman		

M. Release Final Design - 320 hr.
N. Prepare CD3 Package for Approval -140 hr.
O. Incorporate Redlines into Drawings & Release - 300 hr.
P. Prepare/release requirements doc - 200 hr.
Q. S Farm Transfer System Design -PER
R. Retrieval Design -PER
S. Prepare & Release final Component Stress Analysis -100 hr.

4.0 Estimate Stage and Method:

Preliminary/Analogy

5.0 Legal Drivers/Reference Documents:

Tri-Party Agreement Milestone M-45-03C, "Complete Full Scale Saltcake Waste Retrieval Technology Demonstration at S-112"
DOE Order 413.3, Program and Project Management for the Acquisition of Capital Assets,

RPP-7526, Preliminary Engineering Report for the 241-S-112 Retrieval System

RPP-8791, PRELIMINARY PROJECT EXECUTION PLAN FOR TANK 241-S-112 SALTCAKE WASTE RETRIEVAL TECHNOLOGY DEMONSTRATION

RPP-7825, Single-Shell Tank S-112 Full Scale Saltcake Waste Retrieval technology Demonstration Functions and Requirements

Task Title:	Final Design	Revision Number:	b
Sched Act Id:	12.01.05	WBS Number:	5.02.01.02.07.12.01
Activity Owner:	SST Retrieval	PBS Number:	
Prepared By:	CE Hanson/AREngelman		

P3 Activity	Sub Task	P3 Res Code	ResourceType	Fiscal Year	SubtaskDescription	Org Code	Seq Num	COA	Note Ref	Budget Qty	Qty Type	Total Qty
TT28305BE	A	21L	RPP/CH2M PO Contracts	2003	Ventilation System Design - HND	7P300		BA32	1	9.00	$K	9,000.00
TT28305BE	A	LE13E	RPP/CH2M - Other Engineers	2003	Ventilation System Design - ECN Review/approve	7P300		BA32		60.00	HRS	3,725.40
TT28305BE	A	LM03E	RPP/CH2M - Project & Program Mgrs	2003	Ventilation System Design - ECN (Ops/RadCon Mgr)	7P300		BA32		12.00	HRS	827.40
TT28305BE	B	21L	RPP/CH2M PO Contracts	2003	Water Distribution System -300total hr.-100 hr CEES @ $90/hr	7P300		BA32		9.00	$K	9,000.00
TT28305BE	B	21L	RPP/CH2M PO Contracts	2003	Water Distribution System -HND	7P300		BA32	1	175.00	$K	175,000.00
TT28305BE	B	98L	RPP/CH2M Cogema	2003	Water Distribution System - 300 total hr.-160 hr @ $90/hr	7P300		BA32		14.40	$K	14,400.00
TT28305BE	B	LE13E	RPP/CH2M - Other Engineers	2003	Water Distribution System -ECN Review/approve	7P300		BA32		30.00	HRS	1,862.70
TT28305BE	B	LE13E	RPP/CH2M - Other Engineers	2003	Water Distribution System - 300 total hr.-40 hr	7P300		BA32		40.00	HRS	2,483.60
TT28305BE	B	LM03E	RPP/CH2M - Project & Program Mgrs	2003	Water Distribution System -ECN Review/approve(Ops/RadCon Mgr)	7P300		BA32		6.00	HRS	413.70
TT28305BE	C	21L	RPP/CH2M PO Contracts	2003	Pump design -HND	7P300		BA32		50.00	$K	50,000.00
TT28305BE	C	LE13E	RPP/CH2M - Other Engineers	2002	Pump design ECN Review/approve	7P300		BA32		80.00	HRS	4,967.20
TT28305BE	C	LM03E	RPP/CH2M - Project & Program Mgrs	2002	Pump design ECN Review/approve - (Ops/RadCon Mgr)	7P300		BA32		40.00	HRS	2,758.00
TT28305BE	D	21L	RPP/CH2M PO Contracts	2003	Utilities Design - total 140 hr.- 40 hr. CEES @ $90/hr	7P300		BA32		7.20	$K	7,200.00
TT28305BE	D	21L	RPP/CH2M PO Contracts	2003	Utilities Design - HND	7P300		BA32	1	80.00	$K	80,000.00
TT28305BE	D	98L	RPP/CH2M Cogema	2003	Utilities Design - total 140 hr.- 80 hr. @ $90/hr	7P300		BA32		7.20	$K	7,200.00
TT28305BE	D	LE13E	RPP/CH2M - Other Engineers	2003	Utilities Design - total 140 hr.- 20 hr	7P300		BA32		20.00	HRS	1,241.80
TT28305BE	D	LM03E	RPP/CH2M - Project & Program Mgrs	2003	Utilities Design - ECN Review/approve (Ops/RadCon Mgr)	7P300		BA32		8.00	HRS	551.60
TT28305BE	E	21L	RPP/CH2M PO Contracts	2003	Monitoring I&C System -HND	7P300		BA32	1	130.00	$K	130,000.00
TT28305BE	F	21L	RPP/CH2M PO Contracts	2003	Final Design Report & Other Design Media -HND	7P300		BA32	1	112.00	$K	112,000.00
TT28305BE	G	21L	RPP/CH2M PO Contracts	2003	LDMM System Design - HND	7P300		BA32		200.00	$K	200,000.00
TT28305BE	H	21L	RPP/CH2M PO Contracts	2003	Final design Review - 480 total hr. - 80 hr CEES @ $90/hr.	7P300		BA32		7.20	$K	7,200.00
TT28305BE	H	98L	RPP/CH2M Cogema	2003	Final design Review - 480 total hr. - 250 hr @ $90/hr.	7P300		BA32		22.50	$K	22,500.00
TT28305BE	H	LE13E	RPP/CH2M - Other Engineers	2003	Final design Review - 480 total hr. - 150 hr	7P300		BA32		150.00	HRS	9,313.50
TT28305BE	H	LM03E	RPP/CH2M - Project & Program Mgrs	2003	Final Design Review -Ops & RadCon Mgr.	7P300		BA32		60.00	HRS	4,137.00
TT28305BE	I	LE13E	RPP/CH2M - Other Engineers	2003	Procurement Spec. for Final Design and award contract -120 hr.	7P300		BA32		120.00	HRS	7,450.80
TT28305BE	J	21L	RPP/CH2M PO Contracts	2003	Final Process Control Plan -80 hr. CEES @ $90/hr	7P300		BA32		7.20	$K	7,200.00

Cost Estimating Input Sheet

Task Title:	Final Design
Sched Act Id:	12.01.05
Activity Owner:	SST Retrieval
Prepared By:	CE Hanson/AREngelman
Revision Number:	b
WBS Number:	5.02.01.02.07.12.01
PBS Number:	

P3 Activity	Sub Task	P3 Res Code	ResourceType	Fiscal Year	SubtaskDescription	Org Code	Seq Num	COA	Note Ref	Budget Qty	Qty Type	Total Qty
TT28305BE	K	21L	RPP/CH2M PO Contracts	2003	Final Hydraulic Analysis - 140total hr. - 20 hr CEES @ $90/hr	7P300		BA32		1.80	$K	1,800.00
TT28305BE	K	98L	RPP/CH2M Cogema	2003	Final Hydraulic Analysis - 140total hr. - 100 hr @ $90/hr	7P300		BA32		9.00	$K	9,000.00
TT28305BE	K	LE13E	RPP/CH2M - Other Engineers	2003	Final Hydraulic Analysis - 140total hr. - 20 hr	7P300		BA32		20.00	HRS	1,241.80
TT28305BE	L	98L	RPP/CH2M Cogema	2003	Dome Load Analysis - 120 total hr - 40 hr @ $90/hr	7P300		BA32		3.60	$K	3,600.00
TT28305BE	L	LE13E	RPP/CH2M - Other Engineers	2003	Dome Load Analysis - 120 total hr - 80 hr	7P300		BA32		80.00	HRS	4,967.20
TT28305BE	M	21L	RPP/CH2M PO Contracts	2003	Release Final Design - 320 total hr.- 80 hr CEES @ $90/hr	7P300		BA32		7.20	$K	7,200.00
TT28305BE	M	98L	RPP/CH2M Cogema	2003	Release Final Design - 320 total hr.- 160 hr @ $90/hr	7P300		BA32		14.40	$K	14,400.00
TT28305BE	M	LE13E	RPP/CH2M - Other Engineers	2003	Release Final Design - 320 total hr.- 80 hr	7P300		BA32		80.00	HRS	4,967.20
TT28305BE	N	21L	RPP/CH2M PO Contracts	2003	CD3 Package for Approval -140 total hr. - 60 hr CEES @ $90/hr	7P300		BA32		5.40	$K	5,400.00
TT28305BE	N	98L	RPP/CH2M Cogema	2003	CD3 Package for Approval -140total hr. - 40 hr @ $90/hr	7P300		BA32		3.60	$K	3,600.00
TT28305BE	N	LE13E	RPP/CH2M - Other Engineers	2003	CD3 Package for Approval -140total hr. - 40 hr	7P300		BA32		40.00	HRS	2,483.60
TT28305BE	O	21L	RPP/CH2M PO Contracts	2003	Incorporate Redline into Drawings & Release - 300 total hr.- 40 hr CEES @	7P300		BA32		3.60	$K	3,600.00
TT28305BE	O	98L	RPP/CH2M Cogema	2003	Incorporate Redline into Drawings & Release - 300 total hr.- 200 hr @	7P300		BA32		18.00	$K	18,000.00
TT28305BE	O	LE13E	RPP/CH2M - Other Engineers	2003	Incorporate Redline into Drawings & Release - 300 total hr.- 60 hr	7P300		BA32		60.00	HRS	3,725.40
TT28305BE	P	21L	RPP/CH2M PO Contracts	2003	Prepare/release requirements doc - 200 total hr. - 40 hr CEES @ $90/hr	7P300		BA32		3.60	$K	3,600.00
TT28305BE	P	98L	RPP/CH2M Cogema	2003	Prepare/release requirements doc - 200 total hr. - 120 hr @ $90/hr	7P300		BA32		10.80	$K	10,800.00
TT28305BE	P	LE13E	RPP/CH2M - Other Engineers	2003	Prepare/release requirements doc - 200 total hr. - 40 hr.	7P300		BA32		40.00	HRS	2,483.60
TT28305BE	Q	21L	RPP/CH2M PO Contracts	2003	S Farm Transfer System Design -HND	7P300		BA32	1	52.00	$K	52,000.00
TT28305BE	Q	LE13E	RPP/CH2M - Other Engineers	2003	S Farm Transfer System Design -ECN Review/approve	7P300		BA32		150.00	HRS	9,313.50
TT28305BE	Q	LM01E	RPP/CH2M - First Line Supervisors	2003	S Farm Transfer System Design - Review/approve(Ops/RadCon Mgr)	7P300		BA32		30.00	HRS	1,412.10
TT28305BE	R	21L	RPP/CH2M PO Contracts	2003	Retrieval System Design -HND	7P300		BA32	1	78.00	$K	78,000.00
TT28305BE	R	LE13E	RPP/CH2M - Other Engineers	2003	Retrieval System Design -ECN Review/approve	7P300		BA32		90.00	HRS	5,588.10
TT28305BE	R	LM03E	RPP/CH2M - Project & Program Mgrs	2003	Retrieval System Design -ECN Review/approve(Ops/RadCon Mgr)	7P300		BA32		15.00	HRS	1,034.25
TT28305BE	S	21L	RPP/CH2M PO Contracts	2003	Final Component Stress Analysis - 100total hr. -20 hr CEES @ $90/hr	7P300		BA32		9.00	$K	9,000.00
TT28305BE	S	98L	RPP/CH2M Cogema	2003	Final Component Stress Analysis - 240total hr. -40 @ $90/hr	7P300		BA32		3.60	$K	3,600.00
TT28305BE	S	LE13E	RPP/CH2M - Other Engineers	2003	Final Component Stress Analysis - 100total hr. -40 hr	7P300		BA32		40.00	HRS	2,483.60

Cost Estimating Input Sheet

Task Title:	Final Design	Revision Number:	b
Sched Act Id:	12.01.05	WBS Number:	5.02.01.02.07.12.01
Activity Owner:	SST Retrieval	PBS Number:	
Prepared By:	CE Hanson/AREngelman		

7.0 Notes:

1. A/E contractor is HND. Basis for the estimate is contained in RPP 7526, Rev 1 "Preliminary Engineering Report for the 241-S-112 Retrieval System" (PER).

Cost Estimating Input Sheet

Task Title:	Engineering Support	Revision Number:	b
Sched Act Id:	12.01.06	WBS Number:	5.02.01.02.07.12.01
Activity Owner:	SST Retrieval	PBS Number:	
Prepared By:	CE Hanson/AREngelman		

1.0 Scope Description:

This activity includes the following:

A.Engineering and design support
B.Process engineering support
C.PNNL engineering support

2.0 Estimating Assumptions and Exclusions:

A- The complexity of the design of the S-112 dilution/transfer system is similar to that of th SY-101 Level Rise Remediation System.
A- The technical support required to operate and monitor the S-112 dilution/transfer system is similar to that required for the SY-101 Level Rise Remediation System.

3.0 Basis of Estimate:

A - Engineering support - This engineering support will prepare any change in ECNs required and help resolve issues as they arise; provide project documentation support; provide operations design integration, and provide process control and PNNL interface and support

B. Process Engineering support: 1.5 FTE for 24 mos.
Support for concept development, flow sheeting, initial PFD support and development, control strategy preparation, limit of technology definition, Process Control Plan preparation, justification for active ventilation, review and approval of A/E work products (including PFD updates, P&IDs, SDDs, instrumentation selection, equipment selection documents, emissions estimates, etc.)

C. PNNL engineering support:

C1-.TCC Meetings: Hold technical consensus meetings to make recommendations on process design, control, monitoring, safety, interpreting data and other issues - .4 FTE each FY 02 thru FY05

C2 -.Process Control Plan Support: develop dissolution rate & volume values; incorporate TCC recommendations; gas release estimates - .4 FTE (FY02)

C3.- Issue reolution: Perform and document analyses and modeling to resolve safety and operational issues as needed -.75 FTE (FY02); .25 FTE (FY03 thru FY 05)

C5. -Nozzle Tests: Plan and perform scaled and near-full scale tests to develop specifications and requirements for nozzles. - 1.5FTE(FY02)

C7. - PNNL LDMM design and engineering support - 1.5 FTE (FY 02)

4.0 Estimate Stage and Method:

Preliminary/Analogy

Cost Estimating Input Sheet

Task Title:	Engineering Support	Revision Number:	b
Sched Act Id:	12.01.06	WBS Number:	5.02.01.02.07.12.01
Activity Owner:	SST Retrieval	PBS Number:	
Prepared By:	CE Hanson/AREngelman		

5.0 Legal Drivers/Reference Documents:

Tri-Party Agreement Milestone M-45-03C, "Complete Full Scale Saltcake Waste Retrieval Technology Demonstration at S-112"
DOE Order 413.3, Program and Project Management for the Acquisition of Capital Assets,

RPP-7526, Preliminary Engineering Report for the 241-S-112 Retrieval System

RPP-8791, PRELIMINARY PROJECT EXECUTION PLAN FOR TANK 241-S-112 SALTCAKE WASTE RETRIEVAL TECHNOLOGY DEMONSTRATION

RPP-7825, Single-Shell Tank S-112 Full Scale Saltcake Waste Retrieval technology Demonstration Functions and Requirements

Cost Estimating Input Sheet

Task Title:	Engineering Support	Revision Number:	b
Sched Act Id:	12.01.06	WBS Number:	5.02.01.02.07.12.01
Activity Owner:	SST Retrieval	PBS Number:	
Prepared By:	CE Hanson/AREngelman		

P3 Activity	Sub Task	P3 Res Code	ResourceType	Fiscal Year	SubtaskDescription	Org Code	Seq Num	COA	Note Ref	Budget Qty	Qty Type	Total Qty
TT28305BG	A	21L	RPP/CH2M PO Contracts	2002	Process Control and PNNL/engineering interace and support .75 FTE for 12	7P300		B000		122.30	$K	122,300.00
TT28305BG	A	98L	RPP/CH2M Cogema	2003	Engr support- 1.5FTE -6mo @ 151hr/mo @ $90/hr	7P300		B000		122.30	$K	122,300.00
TT28305BG	A	98L	RPP/CH2M Cogema	2002	Operations Design Integration .75 FTE for 12 mo @151hr/mo @$100/hr)	7P300		B000		135.90	$K	135,900.00
TT28305BG	A	98L	RPP/CH2M Cogema	2002	Project Engrng. (1FTE for 12 mos @ 151hr/mo @ $112/hr) (.4FTE for 12mo	7P300		B000		272.50	$K	272,500.00
TT28305BG	B	LE13E	RPP/CH2M - Other Engineers	2002-2003	Process engineering support - 1.5 FTE for 24 mo	7P300		B000		5,424.00	HRS	336,776.20
TT28305BG	C1	3DL	RPP/CH2M Other Hanford Contractors	2002-2005	PNNL support .4 FTE/yr- 2893 hr @ $110/hr.	7P300		B000		318.20	$K	318,200.00
TT28305BG	C2	3DL	RPP/CH2M Other Hanford Contractors	2002	PNNL support .4 FTE- 723 hr @ $110/hr.	7P300		B000		79.50	$K	79,500.00
TT28305BG	C3	3DL	RPP/CH2M Other Hanford Contractors	2002	PNNL support .75 FTE 1356 hr @ $110/hr.	7P300		B000		149.20	$K	149,200.00
TT28305BG	C3	3DL	RPP/CH2M Other Hanford Contractors	2003-2005	PNNL support .25 FTE/yr. 1356 hr @ $110/hr.	7P300		B000		149.20	$K	149,200.00
TT28305BG	C5	3DL	RPP/CH2M Other Hanford Contractors	2002	PNNL support 1.5 FTE 2712 hr @ $110/hr.	7P300		B000		298.30	$K	298,300.00
TT28305BG	C7	3DL	RPP/CH2M Other Hanford Contractors	2002	PNNL Support - LDMM System (.8FTE - 1446 hrs. @ $110/hr)	7P300		B000		159.10	$K	159,100.00

Cost Estimating Input Sheet

Task Title:	Engineering Support	Revision Number:	b
Sched Act Id:	12.01.06	WBS Number:	5.02.01.02.07.12.01
Activity Owner:	SST Retrieval	PBS Number:	
Prepared By:	CE Hanson/AREngelman		

7.0 Notes:

Cost Estimating Input Sheet

Task Title:	Quality Assurance	Revision Number:	b
Sched Act Id:	12.01.07	WBS Number:	5.02.01.02.07.12.01
Activity Owner:	SST Retrieval	PBS Number:	
Prepared By:	CE Hanson/AREngelman		

1.0 Scope Description:

This activity includes the following activities:

A. Develop and issue Project QA Plan
B Project document, ECN, and design review support
C. Review and approve project procurements
D. Perform surveillances
E. Process NCRs

2.0 Estimating Assumptions and Exclusions:

A - After initial issuance, the S-112 Project QA Plan will not require any revisions.

E - QA support for approval of work packages, field inspections, and procurement inspections are included in those respectively activities

3.0 Basis of Estimate:

Estimates are based on historical experience for past tank farm work in the interim stabilization program

4.0 Estimate Stage and Method:

Preliminary/Analogy

5.0 Legal Drivers/Reference Documents:

Tri-Party Agreement Milestone M-45-03C, "Complete Full Scale Saltcake Waste Retrieval Technology Demonstration at S-112"
DOE Order 413.3, Program and Project Management for the Acquisition of Capital Assets,

RPP-7526, Preliminary Engineering Report for the 241-S-112 Retrieval System

RPP-8791, PRELIMINARY PROJECT EXECUTION PLAN FOR TANK 241-S-112 SALTCAKE WASTE RETRIEVAL TECHNOLOGY DEMONSTRATION

RPP-7825, Single-Shell Tank S-112 Full Scale Saltcake Waste Retrieval technology Demonstration Functions and Requirements

Cost Estimating Input Sheet

Task Title:	Quality Assurance	Revision Number:	b
Sched Act Id:	12.01.07	WBS Number:	5.02.01.02.07.12.01
Activity Owner:	SST Retrieval	PBS Number:	
Prepared By:	CE Hanson/AREngelman		

P3 Activity	Sub Task	P3 Res Code	ResourceType	Fiscal Year	SubtaskDescription	Org Code	Seq Num	COA	Note Ref	Budget Qty	Qty Type	Total Qty
TT28305BH	A1	LE11E	RPP/CH2M - Quality Control Engrs	2002	Develop Project QA Plan	7B400		AL10		200.00	HRS	10,224.00
TT28305BH	A2	21L	RPP/CH2M PO Contracts	2002	Review/approve Project QA Plan - CEES engrng - 20 hr @ $90/hr.	7P300		AL10		1.80	$K	1,800.00
TT28305BH	A2	98L	RPP/CH2M Cogema	2002	Review/approve Project QA Plan - engrng - 20 hr @ $90/hr.	7P300		AL10		1.80	$K	1,800.00
TT28305BH	A2	LM03E	RPP/CH2M - Project & Program Mgrs	2002	Review/approve Project QA Plan -Ops Mgr	7B400		AL10		4.00	HRS	275.80
TT28305BH	B	LE11E	RPP/CH2M - Quality Control Engrs	2004	Project Document,ECN,Design reviews	7B400		AL10		300.00	HRS	15,336.00
TT28305BH	B	LE11E	RPP/CH2M - Quality Control Engrs	2002	Project Document,ECN,Design reviews	7B400		AL10		200.00	HRS	10,224.00
TT28305BH	B	LE11E	RPP/CH2M - Quality Control Engrs	2003	Project Document,ECN,Design reviews	7B400		AL10		300.00	HRS	15,336.00
TT28305BH	C	LE11E	RPP/CH2M - Quality Control Engrs	2002	Perform surveillances	7B400		AL10		100.00	HRS	5,112.00
TT28305BH	C	LE11E	RPP/CH2M - Quality Control Engrs	2003	Perform surveillances	7B400		AL10		200.00	HRS	10,224.00
TT28305BH	C	LE11E	RPP/CH2M - Quality Control Engrs	2004	Perform surveillances	7B400		AL10		200.00	HRS	10,224.00
TT28305BH	D	LE11E	RPP/CH2M - Quality Control Engrs	2002	Review/approve procurements	7B400		AL10		150.00	HRS	7,668.00
TT28305BH	D	LE11E	RPP/CH2M - Quality Control Engrs	2003	Review/approve procurements	7B400		AL10		250.00	HRS	12,780.00
TT28305BH	D	LE11E	RPP/CH2M - Quality Control Engrs	2003	Review/approve procurements	7B400		AL10		250.00	HRS	12,780.00
TT28305BH	E	LE11E	RPP/CH2M - Quality Control Engrs	2003	Process NCRs	7B400		AL10		50.00	HRS	2,556.00
TT28305BH	E	LE11E	RPP/CH2M - Quality Control Engrs	2004	Process NCRs	7B400		AL10		100.00	HRS	5,112.00
TT28305BH	E	LE13E	RPP/CH2M - Other Engineers	2003	Process NCRs	7B400		AL10		25.00	HRS	1,552.25
TT28305BH	E	LE13E	RPP/CH2M - Other Engineers	2004	Process NCRs	7B400		AL10		50.00	HRS	3,104.50

Cost Estimating Input Sheet

Task Title:	Quality Assurance	Revision Number:	b
Sched Act Id:	12.01.07	WBS Number:	5.02.01.02.07.12.01
Activity Owner:	SST Retrieval	PBS Number:	
Prepared By:	CE Hanson/AREngelman		

7.0 Notes:

Activity Information - Detail

5.02.01.02.0 S-112 Procurement

Summary

Activity ID	Activity Title	Cost
12.02.01	Chemical Injection Skid	$305,000.00
12.02.02	Pumping System	$508,000.00
12.02.03	Hose-in-Hose Transfer System	$602,000.00
12.02.04	Fabricate water dilution system	$10,500.00
12.02.05	Cameras	$160,450.80
12.02.06	LDMM System Hardware	$970,000.00
12.02.09	PIC skid	$409,000.00
12.02.10	Fabricate water dissolution system	$669,500.00
12.02.11	SHMS E+	$57,000.00
12.02.12	Utilities	$50,000.00
12.02.13	Procurement support	$87,346.40

Summary for 'TBR' = 5.02.01.02.07.12.02 (11 detail records)

Sum *$3,828,797.20*

Cost Estimating Input Sheet

Task Title:	Chemical Injection Skid	Revision Number:	b
Sched Act Id:	12.02.01	WBS Number:	A5.02.01.02.07.12.02
Activity Owner:	SST Retrieval	PBS Number:	
Prepared By:	TE Rainey/AREngelman		

1.0 Scope Description:

The task includes the procurement of a Chemical Injection Skid and caustic dilution addition.

2.0 Estimating Assumptions and Exclusions:

3.0 Basis of Estimate:

Estimates are based on historical experience for past tank farm work in the interim stabilization program

4.0 Estimate Stage and Method:

Preliminary/Analogy

5.0 Legal Drivers/Reference Documents:

Tri-Party Agreement Milestone M-45-03C, "Complete Full Scale Saltcake Waste Retrieval Technology Demonstration at S-112"
DOE Order 413.3, Program and Project Management for the Acquisition of Capital Assets,

RPP-7526, Preliminary Engineering Report for the 241-S-112 Retrieval System

RPP-8791, PRELIMINARY PROJECT EXECUTION PLAN FOR TANK 241-S-112 SALTCAKE WASTE RETRIEVAL TECHNOLOGY DEMONSTRATION

RPP-7825, Single-Shell Tank S-112 Full Scale Saltcake Waste Retrieval technology Demonstration Functions and Requirements

Cost Estimating Input Sheet

Task Title:	Chemical Injection Skid	Revision Number:	b
Sched Act Id:	12.02.01	WBS Number:	A5.02.01.02.07.12.02
Activity Owner:	SST Retrieval	PBS Number:	
Prepared By:	TE Rainey/AREngelman		

P3 Activity	Sub Task	P3 Res Code	ResourceType	Fiscal Year	SubtaskDescription	Org Code	Seq Num	COA	Note Ref	Budget Qty	Qty Type	Total Qty
TT28305CA	B	10L	RPP/CH2M Material & Equipment	2002	Piping	7P300		AF20		40.00	$K	40,000.00
TT28305CA	C	3PL	RPP/CH2M PHMC Support to RPP	2002	Chemical Injection Skid - 1 @ 175K	7P300		AF20		175.00	$K	175,000.00
TT28305CA	D	10L	RPP/CH2M Material & Equipment	2002	Caustic dilution addition -1 @ 70K	7P300		AF20		70.00	$K	70,000.00
TT28305CA	D	10L	RPP/CH2M Material & Equipment	2002	Operational spares	7P300		AF20		20.00	$K	20,000.00

Cost Estimating Input Sheet

Task Title:	Chemical Injection Skid	Revision Number:	b
Sched Act Id:	12.02.01	WBS Number:	A5.02.01.02.07.12.02
Activity Owner:	SST Retrieval	PBS Number:	
Prepared By:	TE Rainey/AREngelman		

7.0 Notes:

Cost Estimating Input Sheet

Task Title:	Pumping System	Revision Number:	b
Sched Act Id:	12.02.02	WBS Number:	A5.02.01.02.07.12.02
Activity Owner:	SST Retrieval	PBS Number:	
Prepared By:	TERainey/AREngelman		

1.0 Scope Description:

Procure a pumping system, including an operational spare. The pump and spare will be tested prior to use.
he pumping system includes the following:

-pump - the pump will include the Sundyne motor, power control monitor, remote indicating bearing monitors and stator RTDs
-backflow preventer (BFP)
-injection water skid (bearing cooling/flushing) (IWS)
-water filtration skid (WFS)

2.0 Estimating Assumptions and Exclusions:

A -Syndyne pump will be utilized
A -Operational spares will be procured

3.0 Basis of Estimate:

Based on estimate provided in RPP 6914, Rev B, "Replacement Saltwell Pump Cost Evaluation", then reconciled against actual costs for similar equipment fabricated in the Hanford Fabrication Shop (based on actual J10s fab work request)

4.0 Estimate Stage and Method:

Preliminary/Analogy

5.0 Legal Drivers/Reference Documents:

Tri-Party Agreement Milestone M-45-03C, "Complete Full Scale Saltcake Waste Retrieval Technology Demonstration at S-112"
DOE Order 413.3, Program and Project Management for the Acquisition of Capital Assets,

RPP-7526, Preliminary Engineering Report for the 241-S-112 Retrieval System

RPP-8791, PRELIMINARY PROJECT EXECUTION PLAN FOR TANK 241-S-112 SALTCAKE WASTE RETRIEVAL TECHNOLOGY DEMONSTRATION

RPP-7825, Single-Shell Tank S-112 Full Scale Saltcake Waste Retrieval technology Demonstration Functions and Requirements

Cost Estimating Input Sheet

Task Title:	Pumping System	Revision Number:	b
Sched Act Id:	12.02.02	WBS Number:	A5.02.01.02.07.12.02
Activity Owner:	SST Retrieval	PBS Number:	
Prepared By:	TERainey/AREngelman		

P3 Activity	Sub Task	P3 Res Code	ResourceType	Fiscal Year	SubtaskDescription	Org Code	Seq Num	COA	Note Ref	Budget Qty	Qty Type	Total Qty
TT28305CA	A	10L	RPP/CH2M Material & Equipment	2003	pump jumpers (2 @ $36.5K/ea.)	7P300		AF20	1	73.00	$K	73,000.00
TT28305CA	A	10L	RPP/CH2M Material & Equipment	2003	pump motor & housing (2 @ $10K/ea.)	7P300		AF20	1	20.00	$K	20,000.00
TT28305CA	A	10L	RPP/CH2M Material & Equipment	2003	Syndyne pumps, legs & diptubes (2 sets including 1 operational spare -(2@	7P300		AF20	2	190.00	$K	190,000.00
TT28305CA	A	3PL	RPP/CH2M PHMC Support to RPP	2003	BFP/IWS/WFS (2 @ $91K/ea)	7P300		AF20	2	182.00	$K	182,000.00
TT28305CA	A	3PL	RPP/CH2M PHMC Support to RPP	2003	Fab shop support for procurement of components (2@ $21.5K/ea)	7P300		AF20	2	43.00	$K	43,000.00

Cost Estimating Input Sheet

Task Title:	Pumping System	Revision Number:	b
Sched Act Id:	12.02.02	WBS Number:	A5.02.01.02.07.12.02
Activity Owner:	SST Retrieval	PBS Number:	
Prepared By:	TERainey/AREngelman		

7.0 Notes:

1. Based on U-106 historical experience
2. Estimate attained from actual J10s (fabrication work requests) for similar components procured/fabricated in the Hanford Fabrication Shop

Cost Estimating Input Sheet

Task Title:	Hose-in-Hose Transfer System	Revision Number:	b
Sched Act Id:	12.02.03	WBS Number:	A5.02.01.02.07.12.02
Activity Owner:	SST Retrieval	PBS Number:	
Prepared By:	TERainey/AREngelman		

1.0 Scope Description:

Procure Hose-in-Hose Transfer Equipment. This includes the costs associated with the replacement of the hose-in-hose transfer lines from 1) Tank S-112 to S-C valve pit and 2) S-C valve pit to S-A valve pit. It also includes the costs for replacing the existing underground piping system from the SA valve pit to the SY-A valve pit with a ose-in-hose transfer system

2.0 Estimating Assumptions and Exclusions:

A-Estimates include major equipment spares
A- Assumes existing 190ft from pit 241-S-C to pt 241-S-A will be replaced due to service life limitations.
A- Assumes a replacement of S-112 to SC valve pit hose (shelf/operating life of hose will expire before end of project). In addition to the 2 lengths of hose, the following components will be procured for the initial installation only :
2" shield plates; 150 ft. of length; 2 doghouses; 2 flex jumpers; and 2 valve manifolds
A - Assumes the underground transfer line from SA valve pit to the SYA valve pit fis not available for use. This line will be replaced with a 2-segment hose system.
A - The hose-in-hose assemblies are fabricated as Hanford utilizing HAMTC/CHG employees.

3.0 Basis of Estimate:

Estimates are based on historical expeience for past tank farm work in the interim stabilization program and BY transfers

4.0 Estimate Stage and Method:

Preliminary/Analogy

5.0 Legal Drivers/Reference Documents:

Tri-Party Agreement Milestone M-45-03C, "Complete Full Scale Saltcake Waste Retrieval Technology Demonstration at S-112"
DOE Order 413.3, Program and Project Management for the Acquisition of Capital Assets,

RPP-7526, Preliminary Engineering Report for the 241-S-112 Retrieval System

RPP-8791, PRELIMINARY PROJECT EXECUTION PLAN FOR TANK 241-S-112 SALTCAKE WASTE RETRIEVAL TECHNOLOGY DEMONSTRATION

RPP-7825, Single-Shell Tank S-112 Full Scale Saltcake Waste Retrieval technology Demonstration Functions and Requirements

Cost Estimating Input Sheet

Task Title:	Hose-in-Hose Transfer System	Revision Number:	b
Sched Act Id:	12.02.03	WBS Number:	A5.02.01.02.07.12.02
Activity Owner:	SST Retrieval	PBS Number:	
Prepared By:	TERainey/AREngelman		

P3 Activity	Sub Task	P3 Res Code	ResourceType	Fiscal Year	SubtaskDescription	Org Code	Seq Num	COA	Note Ref	Budget Qty	Qty Type	Total Qty
TT28305CA	1	10L	RPP/CH2M Material & Equipment	2002	2 in shield plates SA to SYA (500 ft@ $150/ft)	7P300		AF20		75.00	$K	75,000.00
TT28305CA	1	3PL	RPP/CH2M PHMC Support to RPP	2002	Fab hose-in-hose system for S-112 to SC valve pit	7P300		AF20	1	70.00	$K	70,000.00
TT28305CA	1	3PL	RPP/CH2M PHMC Support to RPP	2002	Pit cover plates SYA & SC (2 @ $55K/ea)	7P300		AF20	1	110.00	$K	110,000.00
TT28305CA	1	3PL	RPP/CH2M PHMC Support to RPP	2002	Dog houses for SA & SYA (2 @ $21K/ea)	7P300		AF20	1	42.00	$K	42,000.00
TT28305CA	1	3PL	RPP/CH2M PHMC Support to RPP	2002	Fab joint plates for SA to SYA valve pits (50 @ $1.9K/ea)	7P300		AF20	2	95.00	$K	95,000.00
TT28305CA	1	3PL	RPP/CH2M PHMC Support to RPP	2002	Fab hose-in-hose system for SC to SA valve pit	7P300		AF20	1	70.00	$K	70,000.00
TT28305CA	1	3PL	RPP/CH2M PHMC Support to RPP	2002	Fab hose-in-hose system for SA to SYA valve pit	7P300		AF20	1	140.00	$K	140,000.00

Cost Estimating Input Sheet

Task Title:	Hose-in-Hose Transfer System	Revision Number:	b
Sched Act Id:	12.02.03	WBS Number:	A5.02.01.02.07.12.02
Activity Owner:	SST Retrieval	PBS Number:	
Prepared By:	TERainey/AREngelman		

7.0 Notes:

1. Based on costs of first four hose assemblies fabricated on-site.
2. Based on fab shop costs of $1,900 each. Assume 500 ft. of length, and that 10 foot lendgths of shield plates will be used. Therefore 50 joint plates are required. (50 X $1,900/ea = $95,000)

Cost Estimating Input Sheet

Task Title:	Fabricate water dilution system	Revision Number:	b
Sched Act Id:	12.02.04	WBS Number:	A5.02.01.02.07.12.02
Activity Owner:	SST Retrieval	PBS Number:	
Prepared By:	TERainey/AREngelman		

1.0 Scope Description:

This activity is to fabricate the water dilution system and equipment. This system will provide water to the pump suction for diluting the waste prior to transfer. Material costs for the dilution pump control station is included in this estimate.

2.0 Estimating Assumptions and Exclusions:

A - Estimates include equipment spares.
A- Skid assembly is included in the installation package.

3.0 Basis of Estimate:

Estimates are based on historical experience for past tank farm work in the interim stabilization program

4.0 Estimate Stage and Method:

Preliminary/Analogy

5.0 Legal Drivers/Reference Documents:

Tri-Party Agreement Milestone M-45-03C, "Complete Full Scale Saltcake Waste Retrieval Technology Demonstration at S-112"
DOE Order 413.3, Program and Project Management for the Acquisition of Capital Assets,

RPP-7526, Preliminary Engineering Report for the 241-S-112 Retrieval System

RPP-8791, PRELIMINARY PROJECT EXECUTION PLAN FOR TANK 241-S-112 SALTCAKE WASTE RETRIEVAL TECHNOLOGY DEMONSTRATION

RPP-7825, Single-Shell Tank S-112 Full Scale Saltcake Waste Retrieval technology Demonstration Functions and Requirements

Cost Estimating Input Sheet

Task Title:	Fabricate water dilution system
Sched Act Id:	12.02.04
Activity Owner:	SST Retrieval
Prepared By:	TERainey/AREngelman
Revision Number:	b
WBS Number:	A5.02.01.02.07.12.02
PBS Number:	

P3 Activity	Sub Task	P3 Res Code	ResourceType	Fiscal Year	SubtaskDescription	Org Code	Seq Num	COA	Note Ref	Budget Qty	Qty Type	Total Qty
TT28305CA	A	3PL	RPP/CH2M PHMC Support to RPP	2003	Procure components for the water dilution skid	7P300		AF20		10.50	$K	10,500.00

Cost Estimating Input Sheet

Task Title:	Fabricate water dilution system	Revision Number:	b
Sched Act Id:	12.02.04	WBS Number:	A5.02.01.02.07.12.02
Activity Owner:	SST Retrieval	PBS Number:	
Prepared By:	TERainey/AREngelman		

7.0 Notes:

Cost Estimating Input Sheet

Task Title:	Cameras	Revision Number:	b
Sched Act Id:	12.02.05	WBS Number:	A5.02.01.02.07.12.02
Activity Owner:	SST Retrieval	PBS Number:	
Prepared By:	TERainey/AREngelman		

1.0 Scope Description:

Procure camera and supplies. Receive camera on site and conduct acceptance testing. Purchase video tapes for recording the operation. Also, purchase cabinets for storing the videos of the operatinal evolution.

2.0 Estimating Assumptions and Exclusions:

A - Estimates include major equipment spares

3.0 Basis of Estimate:

Estimates are based on historical experience for past tank farm work in the interim stabilization program

4.0 Estimate Stage and Method:

Preliminary/Analogy

5.0 Legal Drivers/Reference Documents:

Tri-Party Agreement Milestone M-45-03C, "Complete Full Scale Saltcake Waste Retrieval Technology Demonstration at S-112"
DOE Order 413.3, Program and Project Management for the Acquisition of Capital Assets,

RPP-7526, Preliminary Engineering Report for the 241-S-112 Retrieval System

RPP-8791, PRELIMINARY PROJECT EXECUTION PLAN FOR TANK 241-S-112 SALTCAKE WASTE RETRIEVAL TECHNOLOGY DEMONSTRATION

RPP-7825, Single-Shell Tank S-112 Full Scale Saltcake Waste Retrieval technology Demonstration Functions and Requirements

Cost Estimating Input Sheet

Task Title:	Cameras	Revision Number:	b
Sched Act Id:	12.02.05	WBS Number:	A5.02.01.02.07.12.02
Activity Owner:	SST Retrieval	PBS Number:	
Prepared By:	TERainey/AREngelman		

P3 Activity	Sub Task	P3 Res Code	ResourceType	Fiscal Year	SubtaskDescription	Org Code	Seq Num	COA	Note Ref	Budget Qty	Qty Type	Total Qty
TT28305CA	1	10L	RPP/CH2M Material & Equipment	2002	Camera systems (2 @ 70K/ea)	7P300		AF20		140.00	$K	140,000.00
TT28305CA	1	10L	RPP/CH2M Material & Equipment	2002	Video tapes (2000 @ $4.00/ea)	7P300		AF20		8.00	$K	8,000.00
TT28305CA	1	10L	RPP/CH2M Material & Equipment	2002	Video storage cabinets (5 @ $1K/ea)	7P300		AF20		5.00	$K	5,000.00
TT28305CA	1	LE13E	RPP/CH2M - Other Engineers	2002	Prepare and perform ATP	7P300		AF20		120.00	HRS	7,450.80

Cost Estimating Input Sheet

Task Title:	Cameras	Revision Number:	b
Sched Act Id:	12.02.05	WBS Number:	A5.02.01.02.07.12.02
Activity Owner:	SST Retrieval	PBS Number:	
Prepared By:	TERainey/AREngelman		

7.0 Notes:

Cost Estimating Input Sheet

Task Title:	LDMM System Hardware	Revision Number:	b
Sched Act Id:	12.02.06	WBS Number:	A5.02.01.02.07.12.02
Activity Owner:	SST Retrieval	PBS Number:	
Prepared By:	BBrendel/AREngelman		

1.0 Scope Description:

Procure Leak Detection Monitoring Mitigation (LDMM) system hardware. LDMM hardware will consist of both in-tank and ex-tank systems. Items included in this sysem include the following:

InTank:
-Stillwater screw
-Level indicator

ExTank:
-Gas injection system
-Monitoring and interpretation equipment
-software
-well casings
-HEPA filtration system
-extraction pumps

2.0 Estimating Assumptions and Exclusions:

A - Procurement costs include design and development required by the vendor to deliver equipment specified.
A - Injection well gas pumped in via "delta-p" in bottle. No injection pump is assumed.
A- ENRAF is assumed to be accurate enough for in-tank.
A- Current ENRAF will not be used in stillwell
A- Equipment will interface with existing data acquisition system.

3.0 Basis of Estimate:

See notes section for specific basis.

4.0 Estimate Stage and Method:

Magnitude/Analogy

5.0 Legal Drivers/Reference Documents:

Tri-Party Agreement Milestone M-45-03C, "Complete Full Scale Saltcake Waste Retrieval Technology Demonstration at S-112"
DOE Order 413.3, Program and Project Management for the Acquisition of Capital Assets,

RPP-7526, Preliminary Engineering Report for the 241-S-112 Retrieval System

RPP-8791, PRELIMINARY PROJECT EXECUTION PLAN FOR TANK 241-S-112 SALTCAKE WASTE RETRIEVAL TECHNOLOGY DEMONSTRATION

RPP-7825, Single-Shell Tank S-112 Full Scale Saltcake Waste Retrieval technology Demonstration Functions and Requirements

Cost Estimating Input Sheet

Task Title:	LDMM System Hardware	Revision Number:	b
Sched Act Id:	12.02.06	WBS Number:	A5.02.01.02.07.12.02
Activity Owner:	SST Retrieval	PBS Number:	
Prepared By:	BBrendel/AREngelman		

P3 Activity	Sub Task	P3 Res Code	ResourceType	Fiscal Year	SubtaskDescription	Org Code	Seq Num	COA	Note Ref	Budget Qty	Qty Type	Total Qty
TT28305CA	A	10L	RPP/CH2M Material & Equipment	2003	Vapor pumping & extraction sysem	7P300		AF20	3	750.00	$K	750,000.00
TT28305CA	A	10L	RPP/CH2M Material & Equipment	2003	Liquid Level Indicator (ENRAF)	7P300		AF20	5	10.00	$K	10,000.00
TT28305CA	A	10L	RPP/CH2M Material & Equipment	2003	Ex tank monitoring equipment	7P300		AF20	2	150.00	$K	150,000.00
TT28305CA	A	10L	RPP/CH2M Material & Equipment	2003	Stillwell saltwell screen	7P300		AF20	4	10.00	$K	10,000.00
TT28305CA	A	1PL	RPP/CH2M P Card Purchases	2003	Gas procurement -based on scale-up ops duration	7P300		AF20	1	50.00	$K	50,000.00

Cost Estimating Input Sheet

Task Title:	LDMM System Hardware	Revision Number:	b
Sched Act Id:	12.02.06	WBS Number:	A5.02.01.02.07.12.02
Activity Owner:	SST Retrieval	PBS Number:	
Prepared By:	BBrendel/AREngelman		

7.0 Notes:

1. Estimate is based on actual experience gained during ex-tank LDMM testing and scaled up to what will be required for S-112.
2. Estimate is based on actual costs of procuring a SHMS E+ gas monitoring system.
3. Estimate is based on the cost of procuring a system like a "flammable gas compliant" exhauster. This would be of similar magnitude and complexity.
4. Estimate is based on actual cost.
5. Estiamte is based on vendor quote.

Cost Estimating Input Sheet

Task Title:	PIC skid	Revision Number:	b
Sched Act Id:	12.02.09	WBS Number:	A5.02.01.02.07.12.02
Activity Owner:	SST Retrieval	PBS Number:	
Prepared By:	Bbrendel/AREngelman		

1.0 Scope Description:

Procurement of pump instrument and control (PIC) skid This is a standard piece of equipment that the Interim Stabilization Proram utilizes.

2.0 Estimating Assumptions and Exclusions:

A - Estimates include major equipment spares

3.0 Basis of Estimate:

Estimates are based on historical experience for past tank farm work in the interim stabilization program

4.0 Estimate Stage and Method:

Preliminary/Analogy

5.0 Legal Drivers/Reference Documents:

Tri-Party Agreement Milestone M-45-03C, "Complete Full Scale Saltcake Waste Retrieval Technology Demonstration at S-112"
DOE Order 413.3, Program and Project Management for the Acquisition of Capital Assets,

RPP-7526, Preliminary Engineering Report for the 241-S-112 Retrieval System

RPP-8791, PRELIMINARY PROJECT EXECUTION PLAN FOR TANK 241-S-112 SALTCAKE WASTE RETRIEVAL TECHNOLOGY DEMONSTRATION

RPP-7825, Single-Shell Tank S-112 Full Scale Saltcake Waste Retrieval technology Demonstration Functions and Requirements

Cost Estimating Input Sheet

Task Title:	PIC skid
Sched Act Id:	12.02.09
Activity Owner:	SST Retrieval
Prepared By:	Bbrendel/AREngelman
Revision Number:	b
WBS Number:	A5.02.01.02.07.12.02
PBS Number:	

P3 Activity	Sub Task	P3 Res Code	ResourceType	Fiscal Year	SubtaskDescription	Org Code	Seq Num	COA	Note Ref	Budget Qty	Qty Type	Total Qty
TT28305CA	A	10L	RPP/CH2M Material & Equipment	2002	PIC Skid spare parts	7P300		AF20		50.00	$K	50,000.00
TT28305CA	A	3PL	RPP/CH2M PHMC Support to RPP	2002	PIC Skid (1)	7P300		AF20		359.00	$K	359,000.00

Cost Estimating Input Sheet

Task Title:	PIC skid	Revision Number:	b
Sched Act Id:	12.02.09	WBS Number:	A5.02.01.02.07.12.02
Activity Owner:	SST Retrieval	PBS Number:	
Prepared By:	Bbrendel/AREngelman		

7.0 Notes:

Cost Estimating Input Sheet

Task Title:	Fabricate water dissolution system	Revision Number:	b
Sched Act Id:	12.02.10	WBS Number:	A5.02.01.02.07.12.02
Activity Owner:	SST Retrieval	PBS Number:	
Prepared By:	TERainey/AREngelman		

1.0 Scope Description:

This activity is to fabricate the water dissolution system. This system will consist of a water supply skid similar to the SY-101 Surface Level Rise Remediation System water skid. It will also include in-line water heating capabilities. The skid will distribute water to three in-tank nozzle assemblies via hoses.

2.0 Estimating Assumptions and Exclusions:

A - Estimates include equipment spares.
A- Dissolution system will have to heat the water
A - The system will have the capability to interface with the chemical injection skid.

3.0 Basis of Estimate:

Estimates are based on historical experience for past tank farm work in the interim stabilization program

4.0 Estimate Stage and Method:

Preliminary/Analogy

5.0 Legal Drivers/Reference Documents:

Tri-Party Agreement Milestone M-45-03C, "Complete Full Scale Saltcake Waste Retrieval Technology Demonstration at S-112"
DOE Order 413.3, Program and Project Management for the Acquisition of Capital Assets,

RPP-7526, Preliminary Engineering Report for the 241-S-112 Retrieval System

RPP-8791, PRELIMINARY PROJECT EXECUTION PLAN FOR TANK 241-S-112 SALTCAKE WASTE RETRIEVAL TECHNOLOGY DEMONSTRATION

RPP-7825, Single-Shell Tank S-112 Full Scale Saltcake Waste Retrieval technology Demonstration Functions and Requirements

Cost Estimating Input Sheet

Task Title:	Fabricate water dissolution system
Sched Act Id:	12.02.10
Activity Owner:	SST Retrieval
Prepared By:	TERainey/AREngelman

Revision Number:	b
WBS Number:	A5.02.01.02.07.12.02
PBS Number:	

P3 Activity	Sub Task	P3 Res Code	ResourceType	Fiscal Year	SubtaskDescription	Org Code	Seq Num	COA	Note Ref	Budget Qty	Qty Type	Total Qty
TT28305CA	A	10L	RPP/CH2M Material & Equipment	2003	Procure In-line water heater	7P300		AF20		10.00	$K	10,000.00
TT28305CA	A	10L	RPP/CH2M Material & Equipment	2003	Procure hose assemblies (300ft @ $15/ft)	7P300		AF20		4.50	$K	4,500.00
TT28305CA	A	10L	RPP/CH2M Material & Equipment	2003	Procure water supply skid	7P300		AF20	1	200.00	$K	200,000.00
TT28305CA	A	10L	RPP/CH2M Material & Equipment	2003	Procure operational spares	7P300		AF20	2	50.00	$K	50,000.00
TT28305CA	A	3PL	RPP/CH2M PHMC Support to RPP	2003	Fab nozzle assemblies (3 @ $135K/ea)	7P300		AF20		405.00	$K	405,000.00

Cost Estimating Input Sheet

Task Title:	Fabricate water dissolution system	Revision Number:	b
Sched Act Id:	12.02.10	WBS Number:	A5.02.01.02.07.12.02
Activity Owner:	SST Retrieval	PBS Number:	
Prepared By:	TERainey/AREngelman		

7.0 Notes:

1. Estimate based on cost of SY-101 Surface Level Rise Remediation Water skid
2. Engineering judgement of components that may fail

Cost Estimating Input Sheet

Task Title:	SHMS E+	Revision Number:	b
Sched Act Id:	12.02.11	WBS Number:	A5.02.01.02.07.12.02
Activity Owner:	SST Retrieval	PBS Number:	
Prepared By:	CEHanson/AREngelman		

1.0 Scope Description:

Procurement of equipment to modify a SHMS E to upgrade to a SHMS E+. This includes procurement of Gas Chromatograph, B& K ammonia monitor, computers, and miscellaneous parts.

2.0 Estimating Assumptions and Exclusions:

A- SHMS E is available for upgrade

3.0 Basis of Estimate:

Estimate is based on historical experience for past tank farm work upgrading SHMS.

4.0 Estimate Stage and Method:

Preliminary/Analogy

5.0 Legal Drivers/Reference Documents:

Tri-Party Agreement Milestone M-45-03C, "Complete Full Scale Saltcake Waste Retrieval Technology Demonstration at S-112"
DOE Order 413.3, Program and Project Management for the Acquisition of Capital Assets,

RPP-7526, Preliminary Engineering Report for the 241-S-112 Retrieval System

RPP-8791, PRELIMINARY PROJECT EXECUTION PLAN FOR TANK 241-S-112 SALTCAKE WASTE RETRIEVAL TECHNOLOGY DEMONSTRATION

RPP-7825, Single-Shell Tank S-112 Full Scale Saltcake Waste Retrieval technology Demonstration Functions and Requirements

Cost Estimating Input Sheet

Task Title:	SHMS E+	Revision Number:	b
Sched Act Id:	12.02.11	WBS Number:	A5.02.01.02.07.12.02
Activity Owner:	SST Retrieval	PBS Number:	
Prepared By:	CEHanson/AREngelman		

P3 Activity	Sub Task	P3 Res Code	ResourceType	Fiscal Year	SubtaskDescription	Org Code	Seq Num	COA	Note Ref	Budget Qty	Qty Type	Total Qty
TT28305CA	A	10L	RPP/CH2M Material & Equipment	2002	Gas chromatograph	7P300		AF20		20.00	$K	20,000.00
TT28305CA	A	10L	RPP/CH2M Material & Equipment	2002	B&K ammonia monitor	7P300		AF20		25.00	$K	25,000.00
TT28305CA	A	10L	RPP/CH2M Material & Equipment	2002	computers & misc parts	7P300		AF20		7.00	$K	7,000.00
TT28305CA	A	10L	RPP/CH2M Material & Equipment	2002	Tubing, valves, cabling	7P300		AF20		5.00	$K	5,000.00

Cost Estimating Input Sheet

Task Title:	SHMS E+	Revision Number:	b
Sched Act Id:	12.02.11	WBS Number:	A5.02.01.02.07.12.02
Activity Owner:	SST Retrieval	PBS Number:	
Prepared By:	CEHanson/AREngelman		

7.0 Notes:

Cost Estimating Input Sheet

Task Title:	Utilities	Revision Number:	b
Sched Act Id:	12.02.12	WBS Number:	A5.02.01.02.07.12.02
Activity Owner:	SST Retrieval	PBS Number:	
Prepared By:	CEHanson/AREngelman		

1.0 Scope Description:

This includes materials for connection to electrical power, heat trace, and water supply.

2.0 Estimating Assumptions and Exclusions:

A- Estimates includes major equipment spares

3.0 Basis of Estimate:

Estimate is based on historical experience for past tank farm work in the interim stabilization program

4.0 Estimate Stage and Method:

Preliminary/Analogy

5.0 Legal Drivers/Reference Documents:

Tri-Party Agreement Milestone M-45-03C, "Complete Full Scale Saltcake Waste Retrieval Technology Demonstration at S-112"
DOE Order 413.3, Program and Project Management for the Acquisition of Capital Assets,

RPP-7526, Preliminary Engineering Report for the 241-S-112 Retrieval System

RPP-8791, PRELIMINARY PROJECT EXECUTION PLAN FOR TANK 241-S-112 SALTCAKE WASTE RETRIEVAL TECHNOLOGY DEMONSTRATION

RPP-7825, Single-Shell Tank S-112 Full Scale Saltcake Waste Retrieval technology Demonstration Functions and Requirements

Cost Estimating Input Sheet

Task Title:	Utilities
Sched Act Id:	12.02.12
Activity Owner:	SST Retrieval
Prepared By:	CEHanson/AREngelman

Revision Number:	b
WBS Number:	A5.02.01.02.07.12.02
PBS Number:	

P3 Activity	Sub Task	P3 Res Code	ResourceType	Fiscal Year	SubtaskDescription	Org Code	Seq Num	COA	Note Ref	Budget Qty	Qty Type	Total Qty
TT28305CA	A	10L	RPP/CH2M Material & Equipment	2002	Utilities supplies	7P300		AF20		50.00	$K	50,000.00

Cost Estimating Input Sheet

Task Title:	Utilities	Revision Number:	b
Sched Act Id:	12.02.12	WBS Number:	A5.02.01.02.07.12.02
Activity Owner:	SST Retrieval	PBS Number:	
Prepared By:	CEHanson/AREngelman		

7.0 Notes:

Cost Estimating Input Sheet

Task Title:	Procurement support	Revision Number:	b
Sched Act Id:	12.02.13	WBS Number:	A5.02.01.02.07.12.02
Activity Owner:	SST Retrieval	PBS Number:	
Prepared By:	CEHanson/AREngelman		

1.0 Scope Description:

This task provides the funding for the personnel supporting all material procurements. This support includes BTR procurement specialist, material corrdinator, and travel to vendors for inspections and consulting. This also includes receipt inspections

2.0 Estimating Assumptions and Exclusions:

3.0 Basis of Estimate:

See note section for specific basis.

4.0 Estimate Stage and Method:

Preliminary/Analogy

5.0 Legal Drivers/Reference Documents:

Tri-Party Agreement Milestone M-45-03C, "Complete Full Scale Saltcake Waste Retrieval Technology Demonstration at S-112"
DOE Order 413.3, Program and Project Management for the Acquisition of Capital Assets,

RPP-7526, Preliminary Engineering Report for the 241-S-112 Retrieval System

RPP-8791, PRELIMINARY PROJECT EXECUTION PLAN FOR TANK 241-S-112 SALTCAKE WASTE RETRIEVAL TECHNOLOGY DEMONSTRATION

RPP-7825, Single-Shell Tank S-112 Full Scale Saltcake Waste Retrieval technology Demonstration Functions and Requirements

Cost Estimating Input Sheet

Task Title:	Procurement support	Revision Number:	b
Sched Act Id:	12.02.13	WBS Number:	A5.02.01.02.07.12.02
Activity Owner:	SST Retrieval	PBS Number:	
Prepared By:	CEHanson/AREngelman		

P3 Activity	Sub Task	P3 Res Code	ResourceType	Fiscal Year	SubtaskDescription	Org Code	Seq Num	COA	Note Ref	Budget Qty	Qty Type	Total Qty
TT28305CA	A	LE13E	RPP/CH2M - Other Engineers	2002	BTR support	7P300		AF20	1	320.00	HRS	19,868.80
TT28305CA	A	LG03B	RPP/CH2M - Office Clks(Specialized)	2002	Material Coordinator	7P300		AF20	1	320.00	HRS	10,668.80
TT28305CA	A	LP03E	RPP/CH2M - Buyers/Proc/Contracting	2002	Procurement Specialist	7P300		AF20	1	640.00	HRS	26,508.80
TT28305CA	B	2TL	RPP/CH2M Travel Expense	2002	Travel to vendors (10 trips @ $2K /ea	7P300		AF20	2	20.00	$K	20,000.00
TT28305CA	C	3PL	RPP/CH2M PHMC Support to RPP	2002	Source/Receipt inspection	7P300		AF20	3	10.30	$K	10,300.00

Cost Estimating Input Sheet

Task Title:	Procurement support	Revision Number:	b
Sched Act Id:	12.02.13	WBS Number:	A5.02.01.02.07.12.02
Activity Owner:	SST Retrieval	PBS Number:	
Prepared By:	CEHanson/AREngelman		

7.0 Notes:

1. Assume 80 purchase requisitions must be prepared and processed.
- BTR= 4 hr per requisition 80 reqs. @ 4hr/each = 320 hrs.
- Procurement Specialist= 8 hr per requisition 80 reqs. @ 8hr/each = 640 hrs.
- Material Coordinator = 4 hr per requisition 80 reqs. @ 4hr/each = 320 hrs.

2. Travel to vendors for inspection and consulting
Assumes 10 trips are required @ $2K/trip = $20K

3. Source/Receipt Inspection
- Receipt/Inspection= 4 hr per requisition 80 reqs. @ 4hr/each = 320 hrs.
- Source Inspection= 24 hr per procurement; 3 procurements assumed =
3 procurement @ [(Labor=24hr/each @ $60/hr) + (Travel @ $2K/each)] = 3($3,440) = $10,320

Activity Information - Detail

5.02.01.02.0 S-112 Construction

Summary

Activity ID	Activity Title	Cost
12.03.01	Site walkdown and assessment	$48,822.26
12.03.02	Work Package Planning	$196,013.68
12.03.03	Utility Upgrade	$161,275.28
12.03.04	In-Tank Water Dissolution System Installation	$117,362.39
12.03.05	LDMM Installation	$886,843.12
12.03.06	Video Camera Installation	$58,836.11
12.03.07	Ex-Tank Water Dissolution System Installation	$106,454.77
12.03.09	Chemical Addition Skid	$83,660.92
12.03.10	Pump Removal	$525,886.16
12.03.11	PIC Skid	$83,660.92
12.03.12	Pump Installation	$116,747.28
12.03.13	S Farm Transfer System	$384,157.25
12.03.14	SHMS E+ Installation	$210,116.80
12.03.15	Construction Mgmt.	$1,096,200.00

Summary for 'TBR' = 5.02.01.02.07.12.03 (14 detail records)

Sum *$4,076,036.95*

This document was too large to scan as a single document. It has been divided into smaller sections.

Section 2 OF 2

Document Information			
Document #	RPP-7526	Revision	2
Title	PRELIMINARY ENGINEERING REPORT FOR THE S12 SALTCAKE WASTE RETRIEVAL TECHNOLOGY DEMONSTRATION PROJECT		
Date	12/13/2001		
Originator	HANSON CE	Originator Co.	COGEMA
Recipient		Recipient Co.	
References	EDT-665994		
Keywords			
Projects			
Other Information			

Cost Estimating Input Sheet

Task Title:	Site walkdown and assessment	Revision Number:	b
Sched Act Id:	12.03.01	WBS Number:	A5.02.01.02.07.12.03
Activity Owner:	SST Retrieval	PBS Number:	
Prepared By:	JR Biggs/AREngelman		

1.0 Scope Description:

This task will provide walkdowns, riser and pit videos, ground mapping, and GPS surveys of the S-112 Site for use in design and work planning efforts. Ground mapping and GPS Surveys will be provided by contracted services. The video tasks will be performed by CHG personnel and include entry into 3 risers and 1 pit.

2.0 Estimating Assumptions and Exclusions:

A - Current standard practices for rad con and industrial heatlth & safety remains unchanged
A - All work will be accomplished by personnel who are familiar with Tank Farm systems and equipment.
A - Major events such as: radiation release, exhauster shut down or ammonia gas release are not anticipated.

3.0 Basis of Estimate:

Estimates are based on historical experience for past tank farm work in the interim stabilization program. Where applicable Lessons Learned and actual costs from field installations have been incorporated in to estimates and planning.

4.0 Estimate Stage and Method:

Preliminary/Analogy

5.0 Legal Drivers/Reference Documents:

Tri-Party Agreement Milestone M-45-03C, "Complete Full Scale Saltcake Waste Retrieval Technology Demonstration at S-112"
DOE Order 413.3, Program and Project Management for the Acquisition of Capital Assets,

RPP-7526, Preliminary Engineering Report for the 241-S-112 Retrieval System

RPP-8791, PRELIMINARY PROJECT EXECUTION PLAN FOR TANK 241-S-112 SALTCAKE WASTE RETRIEVAL TECHNOLOGY DEMONSTRATION

RPP-7825, Single-Shell Tank S-112 Full Scale Saltcake Waste Retrieval technology Demonstration Functions and Requirements

Cost Estimating Input Sheet

Task Title:	Site walkdown and assessment	Revision Number:	b
Sched Act Id:	12.03.01	WBS Number:	A5.02.01.02.07.12.03
Activity Owner:	SST Retrieval	PBS Number:	
Prepared By:	JR Biggs/AREngelman		

P3 Activity	Sub Task	P3 Res Code	ResourceType	Fiscal Year	SubtaskDescription	Org Code	Seq Num	COA	Note Ref	Budget Qty	Qty Type	Total Qty
TT28305CA1	A	10L	RPP/CH2M Material & Equipment	2003	Material & Consumables	7T300		D000	1	2.00	$K	2,000.00
TT28305CA1	A	21L	RPP/CH2M PO Contracts	2003	GPS Riser Surveys	7T300		D000		5.00	$K	5,000.00
TT28305CA1	A	21L	RPP/CH2M PO Contracts	2003	Ground Mapping	7T300		D000		5.00	$K	5,000.00
TT28305CA1	B	LC02B	RPP/CH2M - Electricians	2003	Field Work - 2 ea. electricians	7T300		D000	2	77.00	HRS	3,238.62
TT28305CA1	B	LC08B	RPP/CH2M - Plumbers & Pipefitters	2003	Field Work - 2 ea. Pipefitters	7T300		D000	2	77.00	HRS	3,043.04
TT28305CA1	B	LE11E	RPP/CH2M - Quality Control Engrs	2003	Field 'Work - 1 ea. Quality Control	7T300		D000	2	19.00	HRS	971.28
TT28305CA1	B	LE13E	RPP/CH2M - Other Engineers	2003	Field Work - 1 ea. COG Engineer	7T300		D000	2	48.00	HRS	2,980.32
TT28305CA1	B	LM01E	RPP/CH2M - First Line Supervisors	2003	Field Work - 1 ea. HPT Supervisor	7T300		D000	2	38.00	HRS	1,788.66
TT28305CA1	B	LM01E	RPP/CH2M - First Line Supervisors	2003	Field Work -1 ea. Ops PIC	7T300		D000	2	38.00	HRS	1,788.66
TT28305CA1	B	LM01E	RPP/CH2M - First Line Supervisors	2003	Close out Work Package	7T300		D000	2	19.00	HRS	894.33
TT28305CA1	B	LR05B	RPP/CH2M - Nuclear Waste Process Ops	2003	Field Work - 8 ea. Operators	7T300		D000	2	307.00	HRS	12,943.12
TT28305CA1	B	LT05B	RPP/CH2M - Health Physics Techs	2003	Field Work - 3 ea. HPTs	7T300		D000	2	115.00	HRS	4,566.65
TT28305CA1	B	LT06B	RPP/CH2M - In Health/Safety Tech	2003	Field Work - 1 ea.	7T300		D000	2	38.00	HRS	1,514.30
TT28305CA1	D	98L	RPP/CH2M Cogema	2003	Close out Work Package Planner 16 HR @ $83/HR	7T300		D000		1.30	$K	1,300.00
TT28305CA1	D	LE13E	RPP/CH2M - Other Engineers	2003	Close out Work Package	7T300		D000		16.00	HRS	993.44
TT28305CA1	D	LP08E	RPP/CH2M - Health Physicists	2003	Close out Work Package	7T300		D000		16.00	HRS	799.84

Cost Estimating Input Sheet

Task Title:	*Site walkdown and assessment*	Revision Number:	b
Sched Act Id:	12.03.01	WBS Number:	A5.02.01.02.07.12.03
Activity Owner:	SST Retrieval	PBS Number:	
Prepared By:	JR Biggs/AREngelman		

7.0 Notes:

1. Consumables such as plastic sheeting, tape, containments, and waste bags are included in this figure. Small tools and PPE are provided by Operations and are excluded from this estimate.

2. All labor hours have been increased by 20% to account for unexpected occurances such as weather and resource availability, based on Interim Stabilization experience. Hours include pre and post job activity including pre-job briefings and dress/undress as applicable.

Cost Estimating Input Sheet

Task Title:	Work Package Planning	Revision Number:	b
Sched Act Id:	12.03.02	WBS Number:	A5.02.01.02.07.12.03
Activity Owner:	SST Retrieval	PBS Number:	
Prepared By:	JR Biggs/AREngelman		

1.0 Scope Description:

The scope of this planning activity consists of the preparation of several Work Packages for field installation have been included. The sub-tasks include:
A) Riser and Pit Video Inspections (4)
B) Riser Elevations and Ground Penetrating Radar Surveys
C) Utility Upgrades (Electrical and Water) and Tie-Ins (4)
D) Installation of In-Tank Water Dissolution Systems*
E) Installation of Video
F) Installation of Water Dissolution Supply Skid
G) Install LDMM Systems (4)*

NOTE: Work planning for those construction efforts not listed here are included within the installation estimates. Including: pump removal; pump installation; chemical skid installation; dilution skid installation; hose-in-hose installation; injection pump installation; PIC skid installation; and SHMS E+ installation

*need JRG review

The Process for Work Package preparation will be in accordance with HNF-IP-0842, Volume 5, section 7.1.

Work Packages are prepared to outline the specific work steps required to assure successful execution of the work within the boundaries of the applicable requirements. The work package preparation process includes:

- A walkdown of the facility/area will be performed to identify the physical condition of the work area.
- Identification of detailed work steps, including Quality Control inspection points and Radiological hold points.
- Identification of re-test requirements.
- Identification of requirements, development of minor field work permits and establishment of energy control barriers.
- Obtain management and oversight review and approval.

Note: In the course of planning this work administrative activities will be performed wherein existing drawings and Engineering Change Notices (ECNs) will be pulled and inspected for previous Tank Farm / equipment modifications. Management review and approval must be obtained before proceeding with the work in the Tank Farm. Whenever practical lessons learned from similar activities will be applied.

Note: Planning will also identify the closeout package content which can include generation of updated drawings and ECNs to reflect the change in equipment configuration. This work scope includes only the identification of the ECN(s).

2.0 Estimating Assumptions and Exclusions:

A - Work planning procedures will remain essentially the same throughout the life of the project.
A - Current standard practices for rad con and industrial health & safety remains unchanged.
A - This work will be performed on a 5 - day calendar and no special overtime is included in the work.
A - The resources allocated for this activity have been adjusted to accommodate the above average interface requirements.

3.0 Basis of Estimate:

A significant number of work packages are prepared each year in the RPP organization. The institutional memory of how to prepare these documents is what forms the basis for this estimate. Copies of Work Package planning documents can be found in the JCS system. Where applicable Lessons Learned and actual costs from other field activities have been used for estimates and planning.

Cost Estimating Input Sheet

Task Title:	Work Package Planning	Revision Number:	b
Sched Act Id:	12.03.02	WBS Number:	A5.02.01.02.07.12.03
Activity Owner:	SST Retrieval	PBS Number:	
Prepared By:	JR Biggs/AREngelman		

4.0 Estimate Stage and Method:

Preliminary/Analogy

5.0 Legal Drivers/Reference Documents:

Tri-Party Agreement Milestone M-45-03C, "Complete Full Scale Saltcake Waste Retrieval Technology Demonstration at S-112"
DOE Order 413.3, Program and Project Management for the Acquisition of Capital Assets,

RPP-7526, Preliminary Engineering Report for the 241-S-112 Retrieval System

RPP-8791, PRELIMINARY PROJECT EXECUTION PLAN FOR TANK 241-S-112 SALTCAKE WASTE RETRIEVAL TECHNOLOGY DEMONSTRATION

RPP-7825, Single-Shell Tank S-112 Full Scale Saltcake Waste Retrieval technology Demonstration Functions and Requirements

Cost Estimating Input Sheet

Task Title:	Work Package Planning	Revision Number:	b
Sched Act Id:	12.03.02	WBS Number:	A5.02.01.02.07.12.03
Activity Owner:	SST Retrieval	PBS Number:	
Prepared By:	JR Biggs/AREngelman		

P3 Activity	Sub Task	P3 Res Code	ResourceType	Fiscal Year	SubtaskDescription	Org Code	Seq Num	COA	Note Ref	Budget Qty	Qty Type	Total Qty
TT28305CA1	10	LE05E	RPP/CH2M - Environmental Engineers	2003	Work Package Planning and EWP review (System Operation)	7T300		D000		4.00	HRS	195.28
TT28305CA1	A	98L	RPP/CH2M Cogema	2003	Work Package Planning and EWP review (Videos) - Planner 40 hr @	7T300		D000		3.30	$K	3,300.00
TT28305CA1	A	LC02B	RPP/CH2M - Electricians	2003	Work Package Planning and EWP review (Videos)	7T300		D000		4.00	HRS	168.24
TT28305CA1	A	LC08B	RPP/CH2M - Plumbers & Pipefitters	2003	Work Package Planning and EWP review (Videos)	7T300		D000		4.00	HRS	158.08
TT28305CA1	A	LE05E	RPP/CH2M - Environmental Engineers	2003	Work Package Planning and EWP review (Videos)	7T300		D000		4.00	HRS	195.28
TT28305CA1	A	LE11E	RPP/CH2M - Quality Control Engrs	2003	Work Package Planning and EWP review (Videos)	7T300		D000		4.00	HRS	204.48
TT28305CA1	A	LE12E	RPP/CH2M - Safety Engineers	2003	Work Package Planning and EWP review (Videos)	7T300		D000		4.00	HRS	195.80
TT28305CA1	A	LE13E	RPP/CH2M - Other Engineers	2003	Work Package Planning and EWP review (Videos)	7T300		D000		12.00	HRS	745.08
TT28305CA1	A	LG03B	RPP/CH2M - Office Clks(Specialized)	2003	Work Package Planning and EWP review (Videos)	7T300		D000		4.00	HRS	133.36
TT28305CA1	A	LM01E	RPP/CH2M - First Line Supervisors	2003	Work Package Planning and EWP review (Videos)	7T300		D000		4.00	HRS	188.28
TT28305CA1	A	LM02E	RPP/CH2M - Managers & Executives	2003	Work Package Planning and EWP review (Videos)	7T300		D000		4.00	HRS	275.96
TT28305CA1	A	LP08E	RPP/CH2M - Health Physicists	2003	Work Package Planning and EWP review (Videos)	7T300		D000		4.00	HRS	199.96
TT28305CA1	A	LR05B	RPP/CH2M - Nuclear Waste Process Ops	2003	Work Package Planning and EWP review (Videos)	7T300		D000		8.00	HRS	337.28
TT28305CA1	A	LT05B	RPP/CH2M - Health Physics Techs	2003	Work Package Planning and EWP review (Videos)	7T300		D000		8.00	HRS	317.68
TT28305CA1	A	LT06B	RPP/CH2M - In Health/Safety Tech	2003	Work Package Planning and EWP review (Videos)	7T300		D000		4.00	HRS	159.40
TT28305CA1	B	98L	RPP/CH2M Cogema	2003	Work Planning and EWP for Site Surveys - Planner 25 hr @ $83/hr.	7T300		D000		2.10	$K	2,100.00
TT28305CA1	B	LE05E	RPP/CH2M - Environmental Engineers	2003	Work Planning and EWP for Site Surveys	7T300		D000		2.00	HRS	97.64
TT28305CA1	B	LE11E	RPP/CH2M - Quality Control Engrs	2003	Work Planning and EWP for Site Surveys	7T300		D000		2.00	HRS	102.24
TT28305CA1	B	LE12E	RPP/CH2M - Safety Engineers	2003	Work Planning and EWP for Site Surveys	7T300		D000		2.00	HRS	97.90
TT28305CA1	B	LE13E	RPP/CH2M - Other Engineers	2003	Work Planning and EWP for Site Surveys	7T300		D000		2.00	HRS	124.18
TT28305CA1	B	LG03B	RPP/CH2M - Office Clks(Specialized)	2003	Work Planning and EWP for Site Surveys	7T300		D000		2.00	HRS	66.68
TT28305CA1	B	LM01E	RPP/CH2M - First Line Supervisors	2003	Work Planning and EWP for Site Surveys	7T300		D000		2.00	HRS	94.14
TT28305CA1	B	LP08E	RPP/CH2M - Health Physicists	2003	Work Planning and EWP for Site Surveys	7T300		D000		2.00	HRS	99.98
TT28305CA1	B	LR05B	RPP/CH2M - Nuclear Waste Process Ops	2003	Work Planning and EWP for Site Surveys	7T300		D000		4.00	HRS	168.64
TT28305CA1	B	LT05B	RPP/CH2M - Health Physics Techs	2003	Work Planning and EWP for Site Surveys	7T300		D000		4.00	HRS	158.84
TT28305CA1	C	98L	RPP/CH2M Cogema	2003	Work Planning and EWP review (Utilities) - Planner 240 hr @ $83/hr	7T300		D000		19.90	$K	19,900.00

Cost Estimating Input Sheet

Task Title:	Work Package Planning	Revision Number:	b
Sched Act Id:	12.03.02	WBS Number:	A5.02.01.02.07.12.03
Activity Owner:	SST Retrieval	PBS Number:	
Prepared By:	JR Biggs/AREngelman		

P3 Activity	Sub Task	P3 Res Code	ResourceType	Fiscal Year	SubtaskDescription	Org Code	Seq Num	COA	Note Ref	Budget Qty	Qty Type	Total Qty
TT28305CA1	C	LC02B	RPP/CH2M - Electricians	2003	Work Planning and EWP review (Utilities)	7T300		D000		64.00	HRS	2,691.84
TT28305CA1	C	LC08B	RPP/CH2M - Plumbers & Pipefitters	2003	Work Planning and EWP review (Utilities)	7T300		D000		64.00	HRS	2,529.28
TT28305CA1	C	LE05E	RPP/CH2M - Environmental Engineers	2003	Work Planning and EWP review (Utilities)	7T300		D000		32.00	HRS	1,562.24
TT28305CA1	C	LE11E	RPP/CH2M - Quality Control Engrs	2003	Work Planning and EWP review (Utilities)	7T300		D000		32.00	HRS	1,635.84
TT28305CA1	C	LE12E	RPP/CH2M - Safety Engineers	2003	Work Planning and EWP review (Utilities)	7T300		D000		32.00	HRS	1,566.40
TT28305CA1	C	LE13E	RPP/CH2M - Other Engineers	2003	Work Planning and EWP review (Utilities)	7T300		D000		40.00	HRS	2,483.60
TT28305CA1	C	LG03B	RPP/CH2M - Office Clks(Specialized)	2003	Work Planning and EWP review (Utilities)	7T300		D000		16.00	HRS	533.44
TT28305CA1	C	LM01E	RPP/CH2M - First Line Supervisors	2003	Work Planning and EWP review (Utilities)	7T300		D000		32.00	HRS	1,506.24
TT28305CA1	C	LM02E	RPP/CH2M - Managers & Executives	2003	Work Planning and EWP review (Utilities)	7T300		D000		32.00	HRS	2,207.68
TT28305CA1	C	LP08E	RPP/CH2M - Health Physicists	2003	Work Planning and EWP review (Utilities)	7T300		D000		32.00	HRS	1,599.68
TT28305CA1	C	LR05B	RPP/CH2M - Nuclear Waste Process Ops	2003	Work Planning and EWP review (Utilities)	7T300		D000		32.00	HRS	1,349.12
TT28305CA1	C	LT05B	RPP/CH2M - Health Physics Techs	2003	Work Planning and EWP review (Utilities)	7T300		D000		32.00	HRS	1,270.72
TT28305CA1	C	LT06B	RPP/CH2M - In Health/Safety Tech	2003	Work Planning and EWP review (Utilities)	7T300		D000		32.00	HRS	1,275.20
TT28305CA1	D	98L	RPP/CH2M Cogema	2003	Work Package and EWP Review Sprinkler Systems - (Planner 180 hr @	7T300		D000		14.90	$K	14,900.00
TT28305CA1	D	LC08B	RPP/CH2M - Plumbers & Pipefitters	2003	Work Package and EWP Review Sprinkler Systems	7T300		D000		24.00	HRS	948.48
TT28305CA1	D	LE05E	RPP/CH2M - Environmental Engineers	2003	Work Package and EWP Review Sprinkler Systems	7T300		D000		24.00	HRS	1,171.68
TT28305CA1	D	LE11E	RPP/CH2M - Quality Control Engrs	2003	Work Package and EWP Review Sprinkler Systems	7T300		D000		24.00	HRS	1,226.88
TT28305CA1	D	LE12E	RPP/CH2M - Safety Engineers	2003	Work Package and EWP Review Sprinkler Systems	7T300		D000		24.00	HRS	1,174.80
TT28305CA1	D	LE13E	RPP/CH2M - Other Engineers	2003	Work Package and EWP Review Sprinkler Systems	7T300		D000		24.00	HRS	1,490.16
TT28305CA1	D	LG03B	RPP/CH2M - Office Clks(Specialized)	2003	Work Package and EWP Review Sprinkler Systems	7T300		D000		12.00	HRS	400.08
TT28305CA1	D	LM01E	RPP/CH2M - First Line Supervisors	2003	Work Package and EWP Review Sprinkler Systems	7T300		D000		24.00	HRS	1,129.68
TT28305CA1	D	LM01E	RPP/CH2M - First Line Supervisors	2003	JRG Review of Package	7T300		D000		8.00	HRS	376.56
TT28305CA1	D	LM02E	RPP/CH2M - Managers & Executives	2003	JRG Review of Package	7T300		D000		8.00	HRS	551.92
TT28305CA1	D	LM02E	RPP/CH2M - Managers & Executives	2003	Work Package and EWP Review Sprinkler Systems	7T300		D000		12.00	HRS	827.88
TT28305CA1	D	LP08E	RPP/CH2M - Health Physicists	2003	JRG Review of Package	7T300		D000		16.00	HRS	799.84
TT28305CA1	D	LP08E	RPP/CH2M - Health Physicists	2003	Work Package and EWP Review Sprinkler Systems	7T300		D000		16.00	HRS	799.84

Cost Estimating Input Sheet

Task Title:	Work Package Planning	Revision Number:	b
Sched Act Id:	12.03.02	WBS Number:	A5.02.01.02.07.12.03
Activity Owner:	SST Retrieval	PBS Number:	
Prepared By:	JR Biggs/AREngelman		

P3 Activity	Sub Task	P3 Res Code	ResourceType	Fiscal Year	SubtaskDescription	Org Code	Seq Num	COA	Note Ref	Budget Qty	Qty Type	Total Qty
TT28305CA1	D	LP08E	RPP/CH2M - Health Physicists	2003	Work Package and EWP Review Sprinkler Systems	7T300		D000		24.00	HRS	1,199.76
TT28305CA1	D	LR05B	RPP/CH2M - Nuclear Waste Process Ops	2003	Work Package and EWP Review Sprinkler Systems	7T300		D000		48.00	HRS	2,023.68
TT28305CA1	D	LT05B	RPP/CH2M - Health Physics Techs	2003	Work Package and EWP Review Sprinkler Systems	7T300		D000		48.00	HRS	1,906.08
TT28305CA1	E	98L	RPP/CH2M Cogema	2003	Work Package Planning and EWP review (Videos) - Planner 40 hr @	7T300		D000		3.30	$K	3,300.00
TT28305CA1	E	LC02B	RPP/CH2M - Electricians	2003	Work Package Planning and EWP review (VideoInstallation)	7T300		D000		4.00	HRS	168.24
TT28305CA1	E	LC08B	RPP/CH2M - Plumbers & Pipefitters	2003	Work Package Planning and EWP review (VideoInstallation)	7T300		D000		4.00	HRS	158.08
TT28305CA1	E	LE05E	RPP/CH2M - Environmental Engineers	2003	Work Package Planning and EWP review (VideoInstallation)	7T300		D000		4.00	HRS	195.28
TT28305CA1	E	LE11E	RPP/CH2M - Quality Control Engrs	2003	Work Package Planning and EWP review (VideoInstallation)	7T300		D000		4.00	HRS	204.48
TT28305CA1	E	LE12E	RPP/CH2M - Safety Engineers	2003	Work Package Planning and EWP review (VideoInstallation)	7T300		D000		4.00	HRS	195.80
TT28305CA1	E	LE13E	RPP/CH2M - Other Engineers	2003	Work Package Planning and EWP review (VideoInstallation)	7T300		D000		12.00	HRS	745.08
TT28305CA1	E	LG03B	RPP/CH2M - Office Clks(Specialized)	2003	Work Package Planning and EWP review (VideoInstallation)	7T300		D000		4.00	HRS	133.36
TT28305CA1	E	LM01E	RPP/CH2M - First Line Supervisors	2003	Work Package Planning and EWP review (VideoInstallation)	7T300		D000		4.00	HRS	188.28
TT28305CA1	E	LM02E	RPP/CH2M - Managers & Executives	2003	Work Package Planning and EWP review (VideoInstallation)	7T300		D000		4.00	HRS	275.96
TT28305CA1	E	LP08E	RPP/CH2M - Health Physicists	2003	Work Package Planning and EWP review(VideoInstallation)	7T300		D000		4.00	HRS	199.96
TT28305CA1	E	LR05B	RPP/CH2M - Nuclear Waste Process Ops	2003	Work Package Planning and EWP review (VideoInstallation)	7T300		D000		8.00	HRS	337.28
TT28305CA1	E	LT05B	RPP/CH2M - Health Physics Techs	2003	Work Package Planning and EWP review (VideoInstallation)	7T300		D000		8.00	HRS	317.68
TT28305CA1	E	LT06B	RPP/CH2M - In Health/Safety Tech	2003	Work Package Planning and EWP review (VideoInstallation)	7T300		D000		4.00	HRS	159.40
TT28305CA1	F	98L	RPP/CH2M Cogema	2003	Work Package and EWP Review Water Supply Skid - Planner 40hr @	7T300		D000		3.30	$K	3,300.00
TT28305CA1	F	LC08B	RPP/CH2M - Plumbers & Pipefitters	2003	Work Package and EWP Review Water Supply Skid	7T300		D000		16.00	HRS	632.32
TT28305CA1	F	LE05E	RPP/CH2M - Environmental Engineers	2003	Work Package and EWP Review Water Supply Skid	7T300		D000		8.00	HRS	390.56
TT28305CA1	F	LE11E	RPP/CH2M - Quality Control Engrs	2003	Work Package and EWP Review Water Supply Skid	7T300		D000		8.00	HRS	408.96
TT28305CA1	F	LE12E	RPP/CH2M - Safety Engineers	2003	Work Package and EWP Review Water Supply Skid	7T300		D000		8.00	HRS	391.60
TT28305CA1	F	LE13E	RPP/CH2M - Other Engineers	2003	Work Package and EWP Review Water Supply Skid	7T300		D000		16.00	HRS	993.44
TT28305CA1	F	LG03B	RPP/CH2M - Office Clks(Specialized)	2003	Work Package and EWP Review Water Supply Skid	7T300		D000		4.00	HRS	133.36
TT28305CA1	F	LM01E	RPP/CH2M - First Line Supervisors	2003	Work Package and EWP Review Water Supply Skid	7T300		D000		8.00	HRS	376.56
TT28305CA1	F	LM02E	RPP/CH2M - Managers & Executives	2003	Work Package and EWP Review Water Supply Skid	7T300		D000		8.00	HRS	551.92

Cost Estimating Input Sheet

Task Title:	Work Package Planning	Revision Number:	b
Sched Act Id:	12.03.02	WBS Number:	A5.02.01.02.07.12.03
Activity Owner:	SST Retrieval	PBS Number:	
Prepared By:	JR Biggs/AREngelman		

P3 Activity	Sub Task	P3 Res Code	ResourceType	Fiscal Year	SubtaskDescription	Org Code	Seq Num	COA	Note Ref	Budget Qty	Qty Type	Total Qty
TT28305CA1	F	LP08E	RPP/CH2M - Health Physicists	2003	Work Package and EWP Review Water Supply Skid	7T300		D000		4.00	HRS	199.96
TT28305CA1	F	LR05B	RPP/CH2M - Nuclear Waste Process Ops	2003	Work Package and EWP Review Water Supply Skid	7T300		D000		16.00	HRS	674.56
TT28305CA1	F	LT05B	RPP/CH2M - Health Physics Techs	2003	Work Package and EWP Review Water Supply Skid	7T300		D000		16.00	HRS	635.36
TT28305CA1	G	98L	RPP/CH2M Cogema	2003	Work Package and EWP Install LDMM System - Planner 90hr/ea @ $83/hr. (4	7T300		D000		30.00	$K	30,000.00
TT28305CA1	G	LC08B	RPP/CH2M - Plumbers & Pipefitters	2003	Work Package and EWP Install LDMM System (4 pkgs.)	7T300		D000		96.00	HRS	3,793.92
TT28305CA1	G	LE05E	RPP/CH2M - Environmental Engineers	2003	Work Package and EWP Install LDMM System (4 pkgs.)	7T300		D000		96.00	HRS	4,686.72
TT28305CA1	G	LE11E	RPP/CH2M - Quality Control Engrs	2003	Work Package and EWP Install LDMM System (4 pkgs.)	7T300		D000		96.00	HRS	4,907.52
TT28305CA1	G	LE12E	RPP/CH2M - Safety Engineers	2003	Work Package and EWP Install LDMM System (4 pkgs.)	7T300		D000		96.00	HRS	4,699.20
TT28305CA1	G	LE13E	RPP/CH2M - Other Engineers	2003	Work Package and EWP Install LDMM System (4 pkgs.)	7T300		D000		96.00	HRS	5,960.64
TT28305CA1	G	LG03B	RPP/CH2M - Office Clks(Specialized)	2003	Work Package and EWP Install LDMM System (4 pkgs.)	7T300		D000		48.00	HRS	1,600.32
TT28305CA1	G	LM01E	RPP/CH2M - First Line Supervisors	2003	JRG Review of Package (4 pkgs.)	7T300		D000		64.00	HRS	3,012.48
TT28305CA1	G	LM01E	RPP/CH2M - First Line Supervisors	2003	Work Package and EWP Install LDMM System (4 pkgs.)	7T300		D000		96.00	HRS	4,518.72
TT28305CA1	G	LM02E	RPP/CH2M - Managers & Executives	2003	JRG Review of Package (4 pkgs.)	7T300		D000		64.00	HRS	4,415.36
TT28305CA1	G	LM02E	RPP/CH2M - Managers & Executives	2003	Work Package and EWP Install LDMM System (4 pkgs.)	7T300		D000		48.00	HRS	3,311.52
TT28305CA1	G	LP08E	RPP/CH2M - Health Physicists	2003	Work Package and EWP Install LDMM System (4 pkgs.)	7T300		D000		96.00	HRS	4,799.04
TT28305CA1	G	LP08E	RPP/CH2M - Health Physicists	2003	Work Package and EWP Install LDMM System (4 pkgs.)	7T300		D000		64.00	HRS	3,199.36
TT28305CA1	G	LP08E	RPP/CH2M - Health Physicists	2003	JRG Review of Package (4 pkgs.)	7T300		D000		64.00	HRS	3,199.36
TT28305CA1	G	LR05B	RPP/CH2M - Nuclear Waste Process Ops	2003	Work Package and EWP Install LDMM System (4 pkgs.)	7T300		D000		192.00	HRS	8,094.72
TT28305CA1	G	LT05B	RPP/CH2M - Health Physics Techs	2003	Work Package and EWP Install LDMM System (4 pkgs.)	7T300		D000		192.00	HRS	7,624.32

Cost Estimating Input Sheet

Task Title:	Work Package Planning	Revision Number:	b
Sched Act Id:	12.03.02	WBS Number:	A5.02.01.02.07.12.03
Activity Owner:	SST Retrieval	PBS Number:	
Prepared By:	JR Biggs/AREngelman		

7.0 Notes:

Cost Estimating Input Sheet

Task Title:	Utility Upgrade	Revision Number:	b
Sched Act Id:	12.03.03	WBS Number:	A5.02.01.02.07.12.03
Activity Owner:	SST Retrieval	PBS Number:	
Prepared By:	JR Biggs/AREngelman		

1.0 Scope Description:

This activity accomplishes upgrades or modifications to the Tank Farm Water and Electrical Systems to support the S-112 Saltcake Dissolution Systems. Modifications to the existing Raw Water System is needed to supply the PIC skid, dilution skid, water dissolution skid, water injection skid, and pump pit flush water. Electrical infrastructure must be routed to power this equipment as well as the Process Monitoring. The final tie-in of the systems to the Farm Infrastructure is included in the respective system installation estimates.

Sub Tasks are:

A) Upgrade/Modify Farm Raw Water Systems
B) Upgrade/Modify Farm Electrical Power
C) Close Out Work Package

2.0 Estimating Assumptions and Exclusions:

A - Current standard practices for rad con and industrial heatlth & safety remains unchanged
A - All work will be accomplished by personnel who are familiar with tank farms systems and equipment.
A - A Principle/Senior COG Engineer dedicated to the installation will be provided.
A - Pit entries will be required.
A - Major events such as: radiation release, exhauster shut down or ammonia gas release are not anticipated.

3.0 Basis of Estimate:

Estimates are based on historical experience for past tank farm work in the interim stabilization program. Where applicable Lessons Learned and actual costs from the installation of other field equipment have been incorporated into estimates and planning.

4.0 Estimate Stage and Method:

Preliminary/Analogy

5.0 Legal Drivers/Reference Documents:

Tri-Party Agreement Milestone M-45-03C, "Complete Full Scale Saltcake Waste Retrieval Technology Demonstration at S-112"
DOE Order 413.3, Program and Project Management for the Acquisition of Capital Assets,

RPP-7526, Preliminary Engineering Report for the 241-S-112 Retrieval System

RPP-8791, PRELIMINARY PROJECT EXECUTION PLAN FOR TANK 241-S-112 SALTCAKE WASTE RETRIEVAL TECHNOLOGY DEMONSTRATION

RPP-7825, Single-Shell Tank S-112 Full Scale Saltcake Waste Retrieval technology Demonstration Functions and Requirements

Cost Estimating Input Sheet

Task Title:	Utility Upgrade
Sched Act Id:	12.03.03
Activity Owner:	SST Retrieval
Prepared By:	JR Biggs/AREngelman
Revision Number:	b
WBS Number:	A5.02.01.02.07.12.03
PBS Number:	

P3 Activity	Sub Task	P3 Res Code	ResourceType	Fiscal Year	SubtaskDescription	Org Code	Seq Num	COA	Note Ref	Budget Qty	Qty Type	Total Qty
TT28305CA1	A	10L	RPP/CH2M Material & Equipment	2003	Material & Consumables	7T300		D000	1	10.00	$K	10,000.00
TT28305CA1	A	3PL	RPP/CH2M PHMC Support to RPP	2003	Install equip - Crane (4 day)	7T300		D000	2,3	25.90	$K	25,900.00
TT28305CA1	A	LC08B	RPP/CH2M - Plumbers & Pipefitters	2003	Field work, 4 ea. Pipefitters	7T300		D000	2	576.00	HRS	22,763.52
TT28305CA1	A	LE11E	RPP/CH2M - Quality Control Engrs	2003	Field 'Work - 1 ea. Quality Control	7T300		D000	2	48.00	HRS	2,453.76
TT28305CA1	A	LE13E	RPP/CH2M - Other Engineers	2003	Field work, COG Engineer	7T300		D000	2	144.00	HRS	8,940.96
TT28305CA1	A	LM01E	RPP/CH2M - First Line Supervisors	2003	Field work, Ops. PIC	7T300		D000	2	144.00	HRS	6,778.08
TT28305CA1	A	LR05B	RPP/CH2M - Nuclear Waste Process Ops	2003	Field work, 2 ea. Operators	7T300		D000	2	288.00	HRS	12,142.08
TT28305CA1	A	LT05B	RPP/CH2M - Health Physics Techs	2003	Field work, 1ea. HPTs	7T300		D000	2	144.00	HRS	5,718.24
TT28305CA1	B	LC02B	RPP/CH2M - Electricians	2003	Field work, 4 ea. Electricians	7T300		D000	2	576.00	HRS	24,226.56
TT28305CA1	B	LE11E	RPP/CH2M - Quality Control Engrs	2003	Field 'Work - 1 ea. Quality Control	7T300		D000	2	48.00	HRS	2,453.76
TT28305CA1	B	LE13E	RPP/CH2M - Other Engineers	2003	Field work, COG Engineer	7T300		D000	2	144.00	HRS	8,940.96
TT28305CA1	B	LM01E	RPP/CH2M - First Line Supervisors	2003	Field work, Ops. PIC	7T300		D000	2	144.00	HRS	6,778.08
TT28305CA1	B	LR05B	RPP/CH2M - Nuclear Waste Process Ops	2003	Field work, 2 ea. Operators	7T300		D000	2	288.00	HRS	12,142.08
TT28305CA1	B	LT05B	RPP/CH2M - Health Physics Techs	2003	Field work, 1ea. HPTs	7T300		D000	2	144.00	HRS	5,718.24
TT28305CA1	C	LC08B	RPP/CH2M - Plumbers & Pipefitters	2003	Close out Work Package	7T300		D000		8.00	HRS	316.16
TT28305CA1	C	LE13E	RPP/CH2M - Other Engineers	2003	Close out Work Package	7T300		D000		8.00	HRS	496.72
TT28305CA1	C	LE13E	RPP/CH2M - Other Engineers	2003	Close out Work Package	7T300		D000		24.00	HRS	1,490.16
TT28305CA1	C	LM01E	RPP/CH2M - First Line Supervisors	2003	Close out Work Package	7T300		D000		8.00	HRS	376.56
TT28305CA1	C	LM01E	RPP/CH2M - First Line Supervisors	2003	Close out Work Package	7T300		D000		24.00	HRS	1,129.68
TT28305CA1	C	LP08E	RPP/CH2M - Health Physicists	2003	Close out Work Package	7T300		D000		24.00	HRS	1,199.76
TT28305CA1	C	LR05B	RPP/CH2M - Nuclear Waste Process Ops	2003	Close out Work Package	7T300		D000		16.00	HRS	674.56
TT28305CA1	C	LT05B	RPP/CH2M - Health Physics Techs	2003	Close out Work Package	7T300		D000		16.00	HRS	635.36

Cost Estimating Input Sheet

Task Title:	Utility Upgrade	Revision Number:	b
Sched Act Id:	12.03.03	WBS Number:	A5.02.01.02.07.12.03
Activity Owner:	SST Retrieval	PBS Number:	
Prepared By:	JR Biggs/AREngelman		

7.0 Notes:

1. 1. Consumables such as plastic sheeting, tape, containments, and waste bags are included in this figure. Small tools and PPE are provided by Operations and are excluded from this estimate.

2. All labor hours have been increased by 20% to account for unexpected occurances such as weather and resource availability, based on Interim Stabilization experience. Hours include pre and post job activity including pre-job briefings and dress/undress as applicable.

3. The crane crew consists of the following personnel and equipment:
Rates are based on the FY01 published site indirect pool rates
1 - Management PIC (Person in Charge) ($130/hr)
1 - Teamster - Heavy Load Truck Driver ($81/hr)
1 - Operator - Crane Operator ($81/hr)
4 - Ironworker/Riggers - Rig pump for lifting, flag crane operator, etc ($324/hr)
1 - 33T Crane/truck/trailer - ($500/day or $55.56/hr.)
Therefore:
The total Crane and Rigging Crew Hourly Rate = $672/hr rounded
Daily rate = 8 hrs X $672 = $5,376

Cost Estimating Input Sheet

Task Title:	In-Tank Water Dissolution System Installation	Revision Number:	b
Sched Act Id:	12.03.04	WBS Number:	A5.02.01.02.07.12.03
Activity Owner:	SST Retrieval	PBS Number:	
Prepared By:	JR Biggs/AREngelman		

1.0 Scope Description:

This task includes resources to install the S-112 Water Dissolution masts System in three risers on the tank. Included in this workscope is the removal of a sludge weight in riser 16 and moving the tank inlet filter from riser 14 to another location to be determined.

The sub tasks involved are:

A) Staging of a crane in the farm.
B) Insertion of the the sprinkler masts (3) into the tank riser.
C) Demobilizing equipment from the Farm.
D) Close Out Work Packages

2.0 Estimating Assumptions and Exclusions:

A - Current standard practices for rad con and industrial heatlth & safety remains unchanged
A - All work will be accomplished by personnel who are familiar with tank farms systems and equipment.
A - A Principle/Senior COG Engineer dedicated to the installation will be provided.
A - Pit entries will be required.
A - Major events such as: radiation release, exhauster shut down or ammonia gas release are not anticipated.

3.0 Basis of Estimate:

Estimates are based on historical experience for past tank farm work in the interim stabilization program. Where applicable Lessons Learned and actual costs from field installations have been incorporated in to estimates and planning.

4.0 Estimate Stage and Method:

Preliminary/Analogy

5.0 Legal Drivers/Reference Documents:

Tri-Party Agreement Milestone M-45-03C, "Complete Full Scale Saltcake Waste Retrieval Technology Demonstration at S-112"
DOE Order 413.3, Program and Project Management for the Acquisition of Capital Assets,

RPP-7526, Preliminary Engineering Report for the 241-S-112 Retrieval System

RPP-8791, PRELIMINARY PROJECT EXECUTION PLAN FOR TANK 241-S-112 SALTCAKE WASTE RETRIEVAL TECHNOLOGY DEMONSTRATION

RPP-7825, Single-Shell Tank S-112 Full Scale Saltcake Waste Retrieval technology Demonstration Functions and Requirements

Cost Estimating Input Sheet

Task Title:	In-Tank Water Dissolution System Installation	Revision Number:	b
Sched Act Id:	12.03.04	WBS Number:	A5.02.01.02.07.12.03
Activity Owner:	SST Retrieval	PBS Number:	
Prepared By:	JR Biggs/AREngelman		

P3 Activity	Sub Task	P3 Res Code	ResourceType	Fiscal Year	SubtaskDescription	Org Code	Seq Num	COA	Note Ref	Budget Qty	Qty Type	Total Qty
TT28305CA1	A	10L	RPP/CH2M Material & Equipment	2003	Material & Consumables	7T300		D000	1	4.00	$K	4,000.00
TT28305CA1	A	3PL	RPP/CH2M PHMC Support to RPP	2003	Stage equip - Crane (1 day)	7T300		D000	2,3	6.50	$K	6,500.00
TT28305CA1	A	LC02B	RPP/CH2M - Electricians	2003	Field work, 2 ea. Electricians	7T300		D000	2	19.00	HRS	799.14
TT28305CA1	A	LC08B	RPP/CH2M - Plumbers & Pipefitters	2003	Field work, 2 ea. Pipefitters	7T300		D000	2	19.00	HRS	750.88
TT28305CA1	A	LE13E	RPP/CH2M - Other Engineers	2003	Field work, 1 ea. COG Engineer	7T300		D000	2	9.00	HRS	558.81
TT28305CA1	A	LM01E	RPP/CH2M - First Line Supervisors	2003	Field work, 1 ea. Ops. PIC	7T300		D000	2	9.00	HRS	423.63
TT28305CA1	A	LR05B	RPP/CH2M - Nuclear Waste Process Ops	2003	Field work, 4 ea. Operators	7T300		D000	2	38.00	HRS	1,602.08
TT28305CA1	A	LT05B	RPP/CH2M - Health Physics Techs	2003	Field work, 2 ea. HPTs	7T300		D000	2	19.00	HRS	754.49
TT28305CA1	A	LT06B	RPP/CH2M - In Health/Safety Tech	2003	Field Work - 1 ea.	7T300		D000	2	9.00	HRS	358.65
TT28305CA1	B	3PL	RPP/CH2M PHMC Support to RPP	2003	Install equip - Crane (5 day)	7T300		D000	2,3	32.40	$K	32,400.00
TT28305CA1	B	LC02B	RPP/CH2M - Electricians	2003	Field work, 2 ea. Electricians	7T300		D000	2	96.00	HRS	4,037.76
TT28305CA1	B	LC08B	RPP/CH2M - Plumbers & Pipefitters	2003	Field work, 2 ea. Pipefitters	7T300		D000	2	96.00	HRS	3,793.92
TT28305CA1	B	LE11E	RPP/CH2M - Quality Control Engrs	2003	Field work, 1 ea. Quality Control	7T300		D000	2	48.00	HRS	2,453.76
TT28305CA1	B	LE13E	RPP/CH2M - Other Engineers	2003	Field work, 1 ea. COG Engineer	7T300		D000	2	48.00	HRS	2,980.32
TT28305CA1	B	LM01E	RPP/CH2M - First Line Supervisors	2003	Field Work - 1 ea. HPT Supervisor	7T300		D000	2	96.00	HRS	4,518.72
TT28305CA1	B	LM01E	RPP/CH2M - First Line Supervisors	2003	Field work, 2 ea. Ops. PIC	7T300		D000	2	48.00	HRS	2,259.36
TT28305CA1	B	LM03E	RPP/CH2M - Project & Program Mgrs	2003	Senior Supervisory Watch	7T300		D000	2	48.00	HRS	3,309.60
TT28305CA1	B	LR05B	RPP/CH2M - Nuclear Waste Process Ops	2003	Field work, 8 ea. Operators	7T300		D000	2	384.00	HRS	16,189.44
TT28305CA1	B	LT05B	RPP/CH2M - Health Physics Techs	2003	Field work, 4 ea. HPTs	7T300		D000	2	192.00	HRS	7,624.32
TT28305CA1	B	LT06B	RPP/CH2M - In Health/Safety Tech	2003	Field Work - 1 ea.	7T300		D000	2	48.00	HRS	1,912.80
TT28305CA1	C	3PL	RPP/CH2M PHMC Support to RPP	2003	Stage equip - Crane (1 day)	7T300		D000	3	6.50	$K	6,500.00
TT28305CA1	C	LC02B	RPP/CH2M - Electricians	2003	Field work, 2 ea. Electricians	7T300		D000	2	19.00	HRS	799.14
TT28305CA1	C	LC08B	RPP/CH2M - Plumbers & Pipefitters	2003	Field work, 2 ea. Pipefitters	7T300		D000	2	19.00	HRS	750.88
TT28305CA1	C	LE13E	RPP/CH2M - Other Engineers	2003	Field work, 1 ea. COG Engineer	7T300		D000	2	9.00	HRS	558.81
TT28305CA1	C	LM01E	RPP/CH2M - First Line Supervisors	2003	Field work, 1 ea. Ops. PIC	7T300		D000	2	9.00	HRS	423.63
TT28305CA1	C	LR05B	RPP/CH2M - Nuclear Waste Process Ops	2003	Field work, 4 ea. Operators	7T300		D000	2	38.00	HRS	1,602.08

Cost Estimating Input Sheet

Task Title:	In-Tank Water Dissolution System Installation	Revision Number:	b
Sched Act Id:	12.03.04	WBS Number:	A5.02.01.02.07.12.03
Activity Owner:	SST Retrieval	PBS Number:	
Prepared By:	JR Biggs/AREngelman		

P3 Activity	Sub Task	P3 Res Code	ResourceType	Fiscal Year	SubtaskDescription	Org Code	Seq Num	COA	Note Ref	Budget Qty	Qty Type	Total Qty
TT28305CA1	C	LT05B	RPP/CH2M - Health Physics Techs	2003	Field work, 2 ea. HPTs	7T300		D000	2	19.00	HRS	754.49
TT28305CA1	D	98L	RPP/CH2M Cogema	2003	Close out Work Package - Planner 40 hr @ $83/hr	7T300		D000		3.30	$K	3,300.00
TT28305CA1	D	LC08B	RPP/CH2M - Plumbers & Pipefitters	2003	Close out Work Package	7T300		D000		8.00	HRS	316.16
TT28305CA1	D	LE13E	RPP/CH2M - Other Engineers	2003	Close out Work Package	7T300		D000		24.00	HRS	1,490.16
TT28305CA1	D	LM01E	RPP/CH2M - First Line Supervisors	2003	Close out Work Package	7T300		D000		24.00	HRS	1,129.68
TT28305CA1	D	LP08E	RPP/CH2M - Health Physicists	2003	Close out Work Package	7T300		D000		24.00	HRS	1,199.76
TT28305CA1	D	LR05B	RPP/CH2M - Nuclear Waste Process Ops	2003	Close out Work Package	7T300		D000		16.00	HRS	674.56
TT28305CA1	D	LT05B	RPP/CH2M - Health Physics Techs	2003	Close out Work Package	7T300		D000		16.00	HRS	635.36

Cost Estimating Input Sheet

Task Title:	In-Tank Water Dissolution System Installation	Revision Number:	b
Sched Act Id:	12.03.04	WBS Number:	A5.02.01.02.07.12.03
Activity Owner:	SST Retrieval	PBS Number:	
Prepared By:	JR Biggs/AREngelman		

7.0 Notes:

1. Consumables such as plastic sheeting, tape, containments, and waste bags are included in this figure. Small tools and PPE are provided by Operations and are excluded from this estimate.

2. All labor hours have been increased by 20% to account for unexpected occurances such as weather and resource availability, based on Interim Stabilization experience.Hours include pre and post job activity including pre-job briefings and dress/undress as applicable.

3. The crane crew consists of the following personnel and equipment:
Rates are based on the FY01 published site indirect pool rates
1 - Management PIC (Person in Charge) ($130/hr)
1 - Teamster - Heavy Load Truck Driver ($81/hr)
1 - Operator - Crane Operator ($81/hr)
4 - Ironworker/Riggers - Rig pump for lifting, flag crane operator, etc ($324/hr)
1 - 33T Crane/truck/trailer - ($500/day or $55.56/hr.)
Therefore:
The total Crane and Rigging Crew Hourly Rate = $672/hr rounded
Daily rate = 8 hrs X $672 = $5,376

Cost Estimating Input Sheet

Task Title:	LDMM Installation	Revision Number:	b
Sched Act Id:	12.03.05	WBS Number:	A5.02.01.02.07.12.03
Activity Owner:	SST Retrieval	PBS Number:	
Prepared By:	JR Biggs/AREngelman		

1.0 Scope Description:

This task is to install the LDMM equipment to monitor for tank leaks during the S-112 Saltcake dissolution and removal activities. The activity includes contracting out the scope of work to sink new drywells, running required instrumentation wiring and installing flow/leakage detector equipment.

Activities:
A) Bore hole (4)
B) Install Ex-Tank Equipment (Drywells, Flow Meters, PITT system)
C) Install In-Tank Equipment and an additional LOW
D) Install process monitoring sysem and data highway to 242-S control room

NOTE: The operation of the LDMM System is covered under pump Operations activities.

2.0 Estimating Assumptions and Exclusions:

A - *Current standard practices for rad con and industrial heatlth & safety remains unchanged*
A - All work will be accomplished by personnel who are familiar with tank farms systems and equipment.
A - Major events such as: radiation release, exhauster shut down or ammonia gas release are not anticipated.

3.0 Basis of Estimate:

The assumptions for this estimate is that an in tank and extank LDMM will be required. The technology includes drilling 2-4 well directly around the tank. Borehole estimates are based on tank farm and vadoze zone program experience

4.0 Estimate Stage and Method:

Magniitude/Analogy

5.0 Legal Drivers/Reference Documents:

Tri-Party Agreement Milestone M-45-03C, "Complete Full Scale Saltcake Waste Retrieval Technology Demonstration at S-112"
DOE Order 413.3, Program and Project Management for the Acquisition of Capital Assets,

RPP-7526, Preliminary Engineering Report for the 241-S-112 Retrieval System

RPP-8791, PRELIMINARY PROJECT EXECUTION PLAN FOR TANK 241-S-112 SALTCAKE WASTE RETRIEVAL TECHNOLOGY DEMONSTRATION

RPP-7825, Single-Shell Tank S-112 Full Scale Saltcake Waste Retrieval technology Demonstration Functions and Requirements

Cost Estimating Input Sheet

Task Title:	LDMM Installation	Revision Number:	b
Sched Act Id:	12.03.05	WBS Number:	A5.02.01.02.07.12.03
Activity Owner:	SST Retrieval	PBS Number:	
Prepared By:	JR Biggs/AREngelman		

P3 Activity	Sub Task	P3 Res Code	ResourceType	Fiscal Year	SubtaskDescription	Org Code	Seq Num	COA	Note Ref	Budget Qty	Qty Type	Total Qty
TT28305CA1	A	21L	RPP/CH2M PO Contracts	2003	Bore Hole Drywells (4)	7T300		D000		600.00	$K	600,000.00
TT28305CA1	B1	10L	RPP/CH2M Material & Equipment	2003	Consumables	7T300		D000	1	4.00	$K	4,000.00
TT28305CA1	B1	3PL	RPP/CH2M PHMC Support to RPP	2003	Stage equip - Crane (5 days)	7T300		D000	2,3	32.40	$K	32,400.00
TT28305CA1	B1	LC02B	RPP/CH2M - Electricians	2003	Field Work - 2 ea. Electricians	7T300		D000	2	192.00	HRS	8,075.52
TT28305CA1	B1	LC08B	RPP/CH2M - Plumbers & Pipefitters	2003	Field Work - 2 ea. Pipefitters	7T300		D000	2	192.00	HRS	7,587.84
TT28305CA1	B1	LM01E	RPP/CH2M - First Line Supervisors	2003	Field Work - 2 ea. Ops PIC	7T300		D000	2	192.00	HRS	9,037.44
TT28305CA1	B1	LR05B	RPP/CH2M - Nuclear Waste Process Ops	2003	Field Work - 5 ea. Operators	7T300		D000	2	480.00	HRS	20,236.80
TT28305CA1	B1	LT05B	RPP/CH2M - Health Physics Techs	2003	Field Work - 4 ea. HPTs	7T300		D000	2	384.00	HRS	15,248.64
TT28305CA1	B1	LT06B	RPP/CH2M - In Health/Safety Tech	2003	Field Work - 1 ea.	7T300		D000	2	96.00	HRS	3,825.60
TT28305CA1	B2	98L	RPP/CH2M Cogema	2003	Close out Work Package - Planner 16 hr @ $83/hr.	7T300		D000	2	1.30	$K	1,300.00
TT28305CA1	B2	LE13E	RPP/CH2M - Other Engineers	2003	Close out Work Package	7T300		D000		8.00	HRS	496.72
TT28305CA1	B2	LM01E	RPP/CH2M - First Line Supervisors	2003	Close out Work Package	7T300		D000		8.00	HRS	376.56
TT28305CA1	B2	LP08E	RPP/CH2M - Health Physicists	2003	Close out Work Package	7T300		D000		8.00	HRS	399.92
TT28305CA1	C1	10L	RPP/CH2M Material & Equipment	2003	Consumables	7T300		D000	1	6.00	$K	6,000.00
TT28305CA1	C1	3PL	RPP/CH2M PHMC Support to RPP	2003	Stage equip - Crane (5 days)	7T300		D000	3	32.40	$K	32,400.00
TT28305CA1	C1	LC02B	RPP/CH2M - Electricians	2003	Field Work - 2 ea. Electricians	7T300		D000	2	192.00	HRS	8,075.52
TT28305CA1	C1	LC08B	RPP/CH2M - Plumbers & Pipefitters	2003	Field Work - 2 ea. Pipefitters	7T300		D000	2	96.00	HRS	3,793.92
TT28305CA1	C1	LM01E	RPP/CH2M - First Line Supervisors	2003	Field Work - 2 ea. Ops PIC	7T300		D000	2	96.00	HRS	4,518.72
TT28305CA1	C1	LR05B	RPP/CH2M - Nuclear Waste Process Ops	2003	Field Work - 8 ea. Operators	7T300		D000	2	384.00	HRS	16,189.44
TT28305CA1	C1	LT05B	RPP/CH2M - Health Physics Techs	2003	Field Work - 4 ea. HPTs	7T300		D000	2	192.00	HRS	7,624.32
TT28305CA1	C1	LT06B	RPP/CH2M - In Health/Safety Tech	2003	Field Work - 1 ea.	7T300		D000	2	48.00	HRS	1,912.80
TT28305CA1	C2	98L	RPP/CH2M Cogema	2003	Close out Work Package - Planner 18 hr @ $83/hr	7T300		D000	2	1.50	$K	1,500.00
TT28305CA1	C2	LE13E	RPP/CH2M - Other Engineers	2003	Close out Work Package	7T300		D000		8.00	HRS	496.72
TT28305CA1	C2	LM01E	RPP/CH2M - First Line Supervisors	2003	Close out Work Package	7T300		D000		8.00	HRS	376.56
TT28305CA1	C2	LP08E	RPP/CH2M - Health Physicists	2003	Close out Work Package	7T300		D000		8.00	HRS	399.92
TT28305CA1	D1	10L	RPP/CH2M Material & Equipment	2003	Consumables	7T300		D000	1	4.00	$K	4,000.00

Cost Estimating Input Sheet

Task Title:	LDMM Installation	Revision Number:	b
Sched Act Id:	12.03.05	WBS Number:	A5.02.01.02.07.12.03
Activity Owner:	SST Retrieval	PBS Number:	
Prepared By:	JR Biggs/AREngelman		

P3 Activity	Sub Task	P3 Res Code	ResourceType	Fiscal Year	SubtaskDescription	Org Code	Seq Num	COA	Note Ref	Budget Qty	Qty Type	Total Qty
TT28305CA1	D1	3PL	RPP/CH2M PHMC Support to RPP	2003	Stage equip - Crane (2 days)	7T300		D000	2,3	13.00	$K	13,000.00
TT28305CA1	D1	LC02B	RPP/CH2M - Electricians	2003	Field Work - 2 ea. Electricians	7T300		D000	2	288.00	HRS	12,113.28
TT28305CA1	D1	LC08B	RPP/CH2M - Plumbers & Pipefitters	2003	Field Work - 2 ea. Pipefitters	7T300		D000	2	96.00	HRS	3,793.92
TT28305CA1	D1	LM01E	RPP/CH2M - First Line Supervisors	2003	Field Work - 1 ea. Ops PIC	7T300		D000	2	192.00	HRS	9,037.44
TT28305CA1	D1	LR05B	RPP/CH2M - Nuclear Waste Process Ops	2003	Field Work - 3 ea. Operators	7T300		D000	2	432.00	HRS	18,213.12
TT28305CA1	D1	LT05B	RPP/CH2M - Health Physics Techs	2003	Field Work - 2 ea. HPTs	7T300		D000	2	288.00	HRS	11,436.48
TT28305CA1	D1	LT06B	RPP/CH2M - In Health/Safety Tech	2003	Field Work - 1 ea.	7T300		D000	2	48.00	HRS	1,912.80
TT28305CA1	D1	LT07B	RPP/CH2M - Instrument & Control Techs	2003	Field Work - 4 ea. Instrument Techs	7T300		D000	2	576.00	HRS	24,289.92
TT28305CA1	D2	98L	RPP/CH2M Cogema	2003	Close out Work Package - Planner 18 hr @ $83/hr	7T300		D000	2	1.50	$K	1,500.00
TT28305CA1	D2	LE13E	RPP/CH2M - Other Engineers	2003	Close out Work Package	7T300		D000		8.00	HRS	496.72
TT28305CA1	D2	LM01E	RPP/CH2M - First Line Supervisors	2003	Close out Work Package	7T300		D000		8.00	HRS	376.56
TT28305CA1	D2	LP08E	RPP/CH2M - Health Physicists	2003	Close out Work Package	7T300		D000		8.00	HRS	399.92

Cost Estimating Input Sheet

Task Title:	LDMM Installation	Revision Number:	b
Sched Act Id:	12.03.05	WBS Number:	A5.02.01.02.07.12.03
Activity Owner:	SST Retrieval	PBS Number:	
Prepared By:	JR Biggs/AREngelman		

7.0 Notes:

1. Consumables such as plastic sheeting, tape, containments, and waste bags are included in this figure. Small tools and PPE are provided by Operations and are excluded from this estimate.

2. All labor hours have been increased by 20% to account for unexpected occurances such as weather and reasource availability, based on Interim Stabilization experience.Hours include pre and post job activity including pre-job briefings and dress/undress as applicable.

3. The crane crew consists of the following personnel and equipment:
Rates are based on the FY01 published site indirect pool rates
1 - Management PIC (Person in Charge) ($130/hr)
1 - Teamster - Heavy Load Truck Driver ($81/hr)
1 - Operator - Crane Operator ($81/hr)
4 - Ironworker/Riggers - Rig pump for lifting, flag crane operator, etc ($324/hr)
1 - 33T Crane/truck/trailer - ($500/day or $55.56/hr.)
Therefore:
The total Crane and Rigging Crew Hourly Rate = $672/hr rounded
Daily rate = 8 hrs X $672 = $5,376

Cost Estimating Input Sheet

Task Title:	Video Camera Installation	Revision Number:	b
Sched Act Id:	12.03.06	WBS Number:	A5.02.01.02.07.12.03
Activity Owner:	SST Retrieval	PBS Number:	
Prepared By:	JR Biggs/AREngelman		

1.0 Scope Description:

This task is to install a portable camera into tank S-112 to view the Saltcake dissolutionand removal activities. The activities to remove the camera is included in this work scope.
Activities:
A) Perform functional test of camera system prior to entering farm.
B) Prep and remove 4" or 12" riser cap and install tophat assembly.
C) Sleeve camera into tank maintaining total containment.
D) Erect enclosure to protect electronic equipment.
E) Remove camera when no longer required and reconfigure tank riser.

NOTE: The operation of the camera is covered under pump Operations activities.

2.0 Estimating Assumptions and Exclusions:

A - Current standard practices for rad con and industrial heatlth & safety remains unchanged
A - All work will be accomplished by personnel who are familiar with Tank Farm systems and equipment.
A - Major events such as: radiation release, exhauster shut down or ammonia gas release are not anticipated.

3.0 Basis of Estimate:

Estimates are based on historical experience for past tank farm work in the interim stabilization program. Where applicable Lessons Learned and actual costs from field installations have been incorporated in to estimates and planning.

4.0 Estimate Stage and Method:

Preliminary/Analogy

5.0 Legal Drivers/Reference Documents:

Tri-Party Agreement Milestone M-45-03C, "Complete Full Scale Saltcake Waste Retrieval Technology Demonstration at S-112"
DOE Order 413.3, Program and Project Management for the Acquisition of Capital Assets,

RPP-7526, Preliminary Engineering Report for the 241-S-112 Retrieval System

RPP-8791, PRELIMINARY PROJECT EXECUTION PLAN FOR TANK 241-S-112 SALTCAKE WASTE RETRIEVAL TECHNOLOGY DEMONSTRATION

RPP-7825, Single-Shell Tank S-112 Full Scale Saltcake Waste Retrieval technology Demonstration Functions and Requirements

Cost Estimating Input Sheet

Task Title:	Video Camera Installation	Revision Number:	b
Sched Act Id:	12.03.06	WBS Number:	A5.02.01.02.07.12.03
Activity Owner:	SST Retrieval	PBS Number:	
Prepared By:	JR Biggs/AREngelman		

P3 Activity	Sub Task	P3 Res Code	ResourceType	Fiscal Year	SubtaskDescription	Org Code	Seq Num	COA	Note Ref	Budget Qty	Qty Type	Total Qty
TT28305CA1	A	10L	RPP/CH2M Material & Equipment	2003	Consumables	7T300		D000	1	4.00	$K	4,000.00
TT28305CA1	A	3PL	RPP/CH2M PHMC Support to RPP	2003	Stage equip - Crane (5 days)	7T300		D000	2,3	32.40	$K	32,400.00
TT28305CA1	A	LC02B	RPP/CH2M - Electricians	2003	Field Work - 2 ea. electricians	7T300		D000	2	96.00	HRS	4,037.76
TT28305CA1	A	LC08B	RPP/CH2M - Plumbers & Pipefitters	2003	Field Work - 2 ea. Pipefitters	7T300		D000	2	38.00	HRS	1,501.76
TT28305CA1	A	LM01E	RPP/CH2M - First Line Supervisors	2003	Field Work - 1 ea. Ops. PIC	7T300		D000	2	48.00	HRS	2,259.36
TT28305CA1	A	LR05B	RPP/CH2M - Nuclear Waste Process Ops	2003	Field Work - 5 ea. Operators	7T300		D000	2	192.00	HRS	8,094.72
TT28305CA1	A	LT05B	RPP/CH2M - Health Physics Techs	2003	Field Work - 2 ea. HPTs	7T300		D000	2	96.00	HRS	3,812.16
TT28305CA1	A	LT06B	RPP/CH2M - In Health/Safety Tech	2003	Field Work - 1 ea.	7T300		D000	2	19.00	HRS	757.15
TT28305CA1	B	98L	RPP/CH2M Cogema	2003	Close out Work Package Planner 9 hr @ $83/hr	7T300		D000	2	0.70	$K	700.00
TT28305CA1	B	LE13E	RPP/CH2M - Other Engineers	2003	Close out Work Package	7T300		D000		8.00	HRS	496.72
TT28305CA1	B	LM01E	RPP/CH2M - First Line Supervisors	2003	Close out Work Package	7T300		D000		8.00	HRS	376.56
TT28305CA1	B	LP08E	RPP/CH2M - Health Physicists	2003	Close out Work Package	7T300		D000		8.00	HRS	399.92

Cost Estimating Input Sheet

Task Title:	Video Camera Installation	Revision Number:	b
Sched Act Id:	12.03.06	WBS Number:	A5.02.01.02.07.12.03
Activity Owner:	SST Retrieval	PBS Number:	
Prepared By:	JR Biggs/AREngelman		

7.0 Notes:

1. Consumables such as plastic sheeting, tape, containments, and waste bags are included in this figure. Small tools and PPE are provided by Operations and are excluded from this estimate.

2. All labor hours have been increased by 20% to account for unexpected occurances such as weather and reasource availability, based on Interim Stabilization experience.Hours include pre and post job activity including pre-job briefings and dress/undress as applicable.

3. The crane crew consists of the following personnel and equipment:
Rates are based on the FY01 published site indirect pool rates
1 - Management PIC (Person in Charge) ($130/hr)
1 - Teamster - Heavy Load Truck Driver ($81/hr)
1 - Operator - Crane Operator ($81/hr)
4 - Ironworker/Riggers - Rig pump for lifting, flag crane operator, etc ($324/hr)
1 - 33T Crane/truck/trailer - ($500/day or $55.56/hr.)
Therefore:
The total Crane and Rigging Crew Hourly Rate = $672/hr rounded
Daily rate = 8 hrs X $672 = $5,376

Cost Estimating Input Sheet

Task Title:	Ex-Tank Water Dissolution System Installation	Revision Number:	b
Sched Act Id:	12.03.07	WBS Number:	A5.02.01.02.07.12.03
Activity Owner:	SST Retrieval	PBS Number:	
Prepared By:	JR Biggs/AREngelman		

1.0 Scope Description:

This task includes resources to install and connect the S-112 Water Skid on the tank. The sub tasks involved are:

A) Staging of a crane in the farm.
B) Installation of the Water Dissolution Skid and connection of skid to dissolution masts.
C) Demobilizing equipment from the Farm.
D) Close Out Work Packages

2.0 Estimating Assumptions and Exclusions:

A - Current standard practices for rad con and industrial heatlth & safety remains unchanged
A - All work will be accomplished by personnel who are familiar with tank farms systems and equipment.
A - A Principle/Senior COG Engineer dedicated to the installation will be provided.
A - Pit entries will be required.
A - Major events such as: radiation release, exhauster shut down or ammonia gas release are not anticipated.

3.0 Basis of Estimate:

Estimates are based on historical experience for past tank farm work in the interim stabilization program. Where applicable Lessons Learned and actual costs from field installations have been incorporated in to estimates and planning.

4.0 Estimate Stage and Method:

Preliminary/Analogy

5.0 Legal Drivers/Reference Documents:

Tri-Party Agreement Milestone M-45-03C, "Complete Full Scale Saltcake Waste Retrieval Technology Demonstration at S-112"
DOE Order 413.3, Program and Project Management for the Acquisition of Capital Assets,

RPP-7526, Preliminary Engineering Report for the 241-S-112 Retrieval System

RPP-8791, PRELIMINARY PROJECT EXECUTION PLAN FOR TANK 241-S-112 SALTCAKE WASTE RETRIEVAL TECHNOLOGY DEMONSTRATION

RPP-7825, Single-Shell Tank S-112 Full Scale Saltcake Waste Retrieval technology Demonstration Functions and Requirements

Cost Estimating Input Sheet

Task Title:	Ex-Tank Water Dissolution System Installation	Revision Number:	b
Sched Act Id:	12.03.07	WBS Number:	A5.02.01.02.07.12.03
Activity Owner:	SST Retrieval	PBS Number:	
Prepared By:	JR Biggs/AREngelman		

P3 Activity	Sub Task	P3 Res Code	ResourceType	Fiscal Year	SubtaskDescription	Org Code	Seq Num	COA	Note Ref	Budget Qty	Qty Type	Total Qty
TT28305CA1	A	10L	RPP/CH2M Material & Equipment	2003	Material & Consumables	7T300		D000	1	4.00	$K	4,000.00
TT28305CA1	A	3PL	RPP/CH2M PHMC Support to RPP	2003	Stage equip - Crane (2 day)	7T300		D000	2,3	13.00	$K	13,000.00
TT28305CA1	A	LE13E	RPP/CH2M - Other Engineers	2003	Field work, 1 ea. COG Engineer	7T300		D000	2	9.00	HRS	558.81
TT28305CA1	A	LM01E	RPP/CH2M - First Line Supervisors	2003	Field work, 1 ea. Ops. PIC	7T300		D000	2	19.00	HRS	894.33
TT28305CA1	A	LR05B	RPP/CH2M - Nuclear Waste Process Ops	2003	Field work, 4 ea. Operators	7T300		D000	2	77.00	HRS	3,246.32
TT28305CA1	A	LT05B	RPP/CH2M - Health Physics Techs	2003	Field work, 2 ea. HPTs	7T300		D000	2	19.00	HRS	754.49
TT28305CA1	B	3PL	RPP/CH2M PHMC Support to RPP	2003	Install equip - Crane (2 day)	7T300		D000	2,3	13.00	$K	13,000.00
TT28305CA1	B	LC02B	RPP/CH2M - Electricians	2003	Field work, 2 ea. Electricians	7T300		D000	2	96.00	HRS	4,037.76
TT28305CA1	B	LC08B	RPP/CH2M - Plumbers & Pipefitters	2003	Field work, 2 ea. Pipefitters	7T300		D000	2	96.00	HRS	3,793.92
TT28305CA1	B	LE11E	RPP/CH2M - Quality Control Engrs	2003	Field work, 1 ea. Quality Control	7T300		D000	2	29.00	HRS	1,482.48
TT28305CA1	B	LE13E	RPP/CH2M - Other Engineers	2003	Field work, 1 ea. COG Engineer	7T300		D000	2	29.00	HRS	1,800.61
TT28305CA1	B	LM01E	RPP/CH2M - First Line Supervisors	2003	Field work, 2 ea. Ops. PIC	7T300		D000	2	192.00	HRS	9,037.44
TT28305CA1	B	LM01E	RPP/CH2M - First Line Supervisors	2003	Field Work - 1 ea. HPT Supervisor	7T300		D000	2	29.00	HRS	1,365.03
TT28305CA1	B	LM03E	RPP/CH2M - Project & Program Mgrs	2003	Senior Supervisory Watch	7T300		D000	2	29.00	HRS	1,999.55
TT28305CA1	B	LR05B	RPP/CH2M - Nuclear Waste Process Ops	2003	Field work, 5 ea. Operators	7T300		D000	2	336.00	HRS	14,165.76
TT28305CA1	B	LT05B	RPP/CH2M - Health Physics Techs	2003	Field work, 4 ea. HPTs	7T300		D000	2	192.00	HRS	7,624.32
TT28305CA1	B	LT06B	RPP/CH2M - In Health/Safety Tech	2003	Field Work - 1 ea.	7T300		D000	2	48.00	HRS	1,912.80
TT28305CA1	C	10L	RPP/CH2M Material & Equipment	2003	Material & Consumables	7T300		D000	1	4.00	$K	4,000.00
TT28305CA1	C	3PL	RPP/CH2M PHMC Support to RPP	2003	Stage equip - Crane (1 day)	7T300		D000	2,3	6.50	$K	6,500.00
TT28305CA1	C	LE13E	RPP/CH2M - Other Engineers	2003	Field work, 1 ea. COG Engineer	7T300		D000	2	10.00	HRS	620.90
TT28305CA1	C	LM01E	RPP/CH2M - First Line Supervisors	2003	Field work, 1 ea. Ops. PIC	7T300		D000	2	10.00	HRS	470.70
TT28305CA1	C	LR05B	RPP/CH2M - Nuclear Waste Process Ops	2003	Field work, 4 ea. Operators	7T300		D000	2	38.00	HRS	1,602.08
TT28305CA1	C	LT05B	RPP/CH2M - Health Physics Techs	2003	Field work, 2 ea. HPTs	7T300		D000	2	19.00	HRS	754.49
TT28305CA1	D	98L	RPP/CH2M Cogema	2003	Close out Work Package Planner 40 hr @ $83/hr	7T300		D000		3.30	$K	3,300.00
TT28305CA1	D	LC02B	RPP/CH2M - Electricians	2003	Field work, 1 ea. Electricians	7T300		D000	2	9.00	HRS	378.54
TT28305CA1	D	LC08B	RPP/CH2M - Plumbers & Pipefitters	2003	Field work, 1 ea. Pipefitters	7T300		D000	2	9.00	HRS	355.68

Cost Estimating Input Sheet

Task Title:	Ex-Tank Water Dissolution System Installation	Revision Number:	b
Sched Act Id:	12.03.07	WBS Number:	A5.02.01.02.07.12.03
Activity Owner:	SST Retrieval	PBS Number:	
Prepared By:	JR Biggs/AREngelman		

P3 Activity	Sub Task	P3 Res Code	ResourceType	Fiscal Year	SubtaskDescription	Org Code	Seq Num	COA	Note Ref	Budget Qty	Qty Type	Total Qty
TT28305CA1	D	LE13E	RPP/CH2M - Other Engineers	2003	Close out Work Package	7T300		D000		24.00	HRS	1,490.16
TT28305CA1	D	LM01E	RPP/CH2M - First Line Supervisors	2003	Close out Work Package	7T300		D000	2	9.00	HRS	423.63
TT28305CA1	D	LM01E	RPP/CH2M - First Line Supervisors	2003	Close out Work Package	7T300		D000		24.00	HRS	1,129.68
TT28305CA1	D	LP08E	RPP/CH2M - Health Physicists	2003	Close out Work Package	7T300		D000		24.00	HRS	1,199.76
TT28305CA1	D	LR05B	RPP/CH2M - Nuclear Waste Process Ops	2003	Close out Work Package	7T300		D000	2	19.00	HRS	801.04
TT28305CA1	D	LT05B	RPP/CH2M - Health Physics Techs	2003	Close out Work Package	7T300		D000	2	19.00	HRS	754.49

Cost Estimating Input Sheet

Task Title:	Ex-Tank Water Dissolution System Installation	Revision Number:	b
Sched Act Id:	12.03.07	WBS Number:	A5.02.01.02.07.12.03
Activity Owner:	SST Retrieval	PBS Number:	
Prepared By:	JR Biggs/AREngelman		

7.0 Notes:

1. Consumables such as plastic sheeting, tape, containments, and waste bags are included in this figure. Small tools and PPE are provided by Operations and are excluded from this estimate.

2. All labor hours have been increased by 20% to account for unexpected occurances such as weather and resource availability, based on Interim Stabilization experience.Hours include pre and post job activity including pre-job briefings and dress/undress as applicable.

3. The crane crew consists of the following personnel and equipment:
Rates are based on the FY01 published site indirect pool rates
1 - Management PIC (Person in Charge) ($130/hr)
1 - Teamster - Heavy Load Truck Driver ($81/hr)
1 - Operator - Crane Operator ($81/hr)
4 - Ironworker/Riggers - Rig pump for lifting, flag crane operator, etc ($324/hr)
1 - 33T Crane/truck/trailer - ($500/day or $55.56/hr.)
Therefore:
The total Crane and Rigging Crew Hourly Rate = $672/hr rounded
Daily rate = 8 hrs X $672 = $5,376

Cost Estimating Input Sheet

Task Title:	Chemical Addition Skid	Revision Number:	b
Sched Act Id:	12.03.09	WBS Number:	A5.02.01.02.07.12.03
Activity Owner:	SST Retrieval	PBS Number:	
Prepared By:	JR Biggs/AREngelman		

1.0 Scope Description:

Plan, install and connect the S-112 Chemical Addition Skid on the tank. This activity includes:

A1) Perform Work Package Planning
A2) Staging of a crane in the farm.
A3) Installation of the skid and connection to tank systems (water, electrical ,etc.)
A4) Close Out Work Packages

2.0 Estimating Assumptions and Exclusions:

A - Current standard practices for rad con and industrial heatlth & safety remains unchanged
A - All work will be accomplished by personnel who are familiar with Tank Farm systems and equipment.
A - A Principle/Senior COG Engineer dedicated to the installation will be provided.
A - Pit entries will be required.
A - Major events such as: radiation release, exhauster shut down or ammonia gas release are not anticipated.

3.0 Basis of Estimate:

Estimates are based on historical experience for past tank farm work in the interim stabilization program. Where applicable Lessons Learned from the installation of the transfer system in Tank AW-104 have been incorporated in to estimates and planning.

4.0 Estimate Stage and Method:

Preliminary/Analogy

5.0 Legal Drivers/Reference Documents:

Tri-Party Agreement Milestone M-45-03C, "Complete Full Scale Saltcake Waste Retrieval Technology Demonstration at S-112"
DOE Order 413.3, Program and Project Management for the Acquisition of Capital Assets,

RPP-7526, Preliminary Engineering Report for the 241-S-112 Retrieval System

RPP-8791, PRELIMINARY PROJECT EXECUTION PLAN FOR TANK 241-S-112 SALTCAKE WASTE RETRIEVAL TECHNOLOGY DEMONSTRATION

RPP-7825, Single-Shell Tank S-112 Full Scale Saltcake Waste Retrieval technology Demonstration Functions and Requirements

Cost Estimating Input Sheet

Task Title:	Chemical Addition Skid	Revision Number:	b
Sched Act Id:	12.03.09	WBS Number:	A5.02.01.02.07.12.03
Activity Owner:	SST Retrieval	PBS Number:	
Prepared By:	JR Biggs/AREngelman		

P3 Activity	Sub Task	P3 Res Code	ResourceType	Fiscal Year	SubtaskDescription	Org Code	Seq Num	COA	Note Ref	Budget Qty	Qty Type	Total Qty
TT28305CA1	A	10L	RPP/CH2M Material & Equipment	2003	Material & Consumables	7T300		D000	1	4.00	$K	4,000.00
TT28305CA1	A1	98L	RPP/CH2M Cogema	2003	Work Package and EWP Review Chemical Addition System Planner	7T300		D000		3.30	$K	3,300.00
TT28305CA1	A1	LC08B	RPP/CH2M - Plumbers & Pipefitters	2003	Work Package and EWP Review Chemical Addition System	7T300		D000		16.00	HRS	632.32
TT28305CA1	A1	LE05E	RPP/CH2M - Environmental Engineers	2003	Work Package and EWP Review Chemical Addition System	7T300		D000		8.00	HRS	390.56
TT28305CA1	A1	LE11E	RPP/CH2M - Quality Control Engrs	2003	Work Package and EWP Review Chemical Addition System	7T300		D000		8.00	HRS	408.96
TT28305CA1	A1	LE12E	RPP/CH2M - Safety Engineers	2003	Work Package and EWP Review Chemical Addition System	7T300		D000		8.00	HRS	391.60
TT28305CA1	A1	LE13E	RPP/CH2M - Other Engineers	2003	Work Package and EWP Review Chemical Addition System	7T300		D000		16.00	HRS	993.44
TT28305CA1	A1	LG03B	RPP/CH2M - Office Clks(Specialized)	2003	Work Package and EWP Review Chemical Addition System	7T300		D000		4.00	HRS	133.36
TT28305CA1	A1	LM01E	RPP/CH2M - First Line Supervisors	2003	Work Package and EWP Review Chemical Addition System	7T300		D000		8.00	HRS	376.56
TT28305CA1	A1	LM02E	RPP/CH2M - Managers & Executives	2003	Work Package and EWP Review Chemical Addition System	7T300		D000		8.00	HRS	551.92
TT28305CA1	A1	LP08E	RPP/CH2M - Health Physicists	2003	Work Package and EWP Review Chemical Addition System	7T300		D000		4.00	HRS	199.96
TT28305CA1	A1	LR05B	RPP/CH2M - Nuclear Waste Process Ops	2003	Work Package and EWP Review Chemical Addition System	7T300		D000		16.00	HRS	674.56
TT28305CA1	A1	LT05B	RPP/CH2M - Health Physics Techs	2003	Work Package and EWP Review Chemical Addition System	7T300		D000		16.00	HRS	635.36
TT28305CA1	A2	3PL	RPP/CH2M PHMC Support to RPP	2003	Stage equip - Crane (1 day)	7T300		D000	2,3	6.50	$K	6,500.00
TT28305CA1	A2	LM01E	RPP/CH2M - First Line Supervisors	2003	Field work, 1 ea. Ops. PIC	7T300		D000	2	10.00	HRS	470.70
TT28305CA1	A2	LR05B	RPP/CH2M - Nuclear Waste Process Ops	2003	Field work, 4 ea. Operators	7T300		D000	2	39.00	HRS	1,644.24
TT28305CA1	A2	LT05B	RPP/CH2M - Health Physics Techs	2003	Field work, 2 ea. HPTs	7T300		D000	2	20.00	HRS	794.20
TT28305CA1	A3	3PL	RPP/CH2M PHMC Support to RPP	2003	Stage equip - Crane (2 day)	7T300		D000	2,3	13.00	$K	13,000.00
TT28305CA1	A3	LC02B	RPP/CH2M - Electricians	2003	Field work, 2 ea. Electricians	7T300		D000	2	192.00	HRS	8,075.52
TT28305CA1	A3	LC08B	RPP/CH2M - Plumbers & Pipefitters	2003	Field work, 2 ea. Pipefitters	7T300		D000	2	192.00	HRS	7,587.84
TT28305CA1	A3	LE11E	RPP/CH2M - Quality Control Engrs	2003	Field work, 1 ea. Quality Control	7T300		D000	2	48.00	HRS	2,453.76
TT28305CA1	A3	LE13E	RPP/CH2M - Other Engineers	2003	Field work, 1 ea. COG Engineer	7T300		D000	2	72.00	HRS	4,470.48
TT28305CA1	A3	LM01E	RPP/CH2M - First Line Supervisors	2003	Field work, 1 ea. Ops. PIC	7T300		D000	2	96.00	HRS	4,518.72
TT28305CA1	A3	LM01E	RPP/CH2M - First Line Supervisors	2003	Field work, 1 ea. HPT Supervisor	7T300		D000	2	29.00	HRS	1,365.03
TT28305CA1	A3	LM03E	RPP/CH2M - Project & Program Mgrs	2003	Senior Supervisory Watch	7T300		D000	2	29.00	HRS	1,999.55
TT28305CA1	A3	LR05B	RPP/CH2M - Nuclear Waste Process Ops	2003	Field work, 2 ea. Operators	7T300		D000	2	192.00	HRS	8,094.72

Cost Estimating Input Sheet

Task Title:	Chemical Addition Skid	Revision Number:	b
Sched Act Id:	12.03.09	WBS Number:	A5.02.01.02.07.12.03
Activity Owner:	SST Retrieval	PBS Number:	
Prepared By:	JR Biggs/AREngelman		

P3 Activity	Sub Task	P3 Res Code	ResourceType	Fiscal Year	SubtaskDescription	Org Code	Seq Num	COA	Note Ref	Budget Qty	Qty Type	Total Qty
TT28305CA1	A3	LT05B	RPP/CH2M - Health Physics Techs	2003	Field work, 2 ea. HPTs	7T300		D000	2	192.00	HRS	7,624.32
TT28305CA1	A4	98L	RPP/CH2M Cogema	2003	Close Out Work Package -Planner 16 hr @ $83/hr	7T300		D000		1.30	$K	1,300.00
TT28305CA1	A4	LE13E	RPP/CH2M - Other Engineers	2003	Close Out Work Package	7T300		D000		8.00	HRS	496.72
TT28305CA1	A4	LM01E	RPP/CH2M - First Line Supervisors	2003	Close Out Work Package	7T300		D000		8.00	HRS	376.56
TT28305CA1	A4	LP08E	RPP/CH2M - Health Physicists	2003	Close Out Work Package	7T300		D000		4.00	HRS	199.96

Cost Estimating Input Sheet

Task Title:	Chemical Addition Skid	Revision Number:	b
Sched Act Id:	12.03.09	WBS Number:	A5.02.01.02.07.12.03
Activity Owner:	SST Retrieval	PBS Number:	
Prepared By:	JR Biggs/AREngelman		

7.0 Notes:

1. Consumables such as plastic sheeting, tape, containments, and waste bags are included in this figure. Small tools and PPE are provided by Operations and are excluded from this estimate.

2. All labor hours have been increased by 20% to account for unexpected occurances such as weather and resource availability, based on Interim Stabilization experience.Hours include pre and post job activity including pre-job briefings and dress/undress as applicable.

3. The crane crew consists of the following personnel and equipment:
Rates are based on the FY01 published site indirect pool rates
   1 - Management PIC (Person in Charge) ($130/hr)
   1 - Teamster - Heavy Load Truck Driver ($81/hr)
   1 - Operator - Crane Operator ($81/hr)
   4 - Ironworker/Riggers - Rig pump for lifting, flag crane operator, etc ($324/hr)
   1 - 33T Crane/truck/trailer - ($500/day or $55.56/hr.)
   Therefore:
   The total Crane and Rigging Crew Hourly Rate = $672/hr rounded
   Daily rate = 8 hrs X $672 = $5,376

Cost Estimating Input Sheet

Task Title:	Pump Removal	Revision Number:	b
Sched Act Id:	12.03.10	WBS Number:	A5.02.01.02.07.12.03
Activity Owner:	SST Retrieval	PBS Number:	
Prepared By:	JR Biggs/AREngelman		

1.0 Scope Description:

This task includes resources to plan and remove a failed saltwell pump and screen from Tank S-112. This activity includes:

B1) Work Package planning to include an EWP and JRG review.
B2) Removal Mock-Up (10 Days).
B3) Staging equipment and the crane in the farm (3 Shifts).
B4) Equipment Removal (8 Shifts, 4 intrusive/4 ex-tank).
-Lifting the S-112 Cover blocks.
-Electrically disconnecting the pump.
-Connecting the flush/decon water assembly.
-Installing the containment adapter assembly.
-Starting the flush and decon water flows.
-Pump removal, size reduction, and disposal.
-Saltwell screen removal, size reduction, and disposal.
-Cover Block Installation.
B5) Equipment demobilization (2 Shifts).
B6) Work Package closeout.

NOTE: This is a complicated evolution requiring several simultaneous activities. Senior and Line Management will be at the work site during this evolution.

2.0 Estimating Assumptions and Exclusions:

A - Current standard practices for rad con and industrial heatlth & safety remains unchanged
A - All work will be accomplished by personnel who are familiar with Tank Farm systems and equipment.
A - A Principle/Senior COG Engineer dedicated to the installation will be provided.
A - Pit entries will be required.
A - Major events such as: radiation release, exhauster shut down or ammonia gas release are not anticipated.

3.0 Basis of Estimate:

Estimates are based on historical experience for past tank farm work in the interim stabilization program. Where applicable Lessons Learned from the removal of the transfer system in Tank AW-104 have been incorporated in to estimates and planning.

4.0 Estimate Stage and Method:

Preliminary/Analogy

5.0 Legal Drivers/Reference Documents:

Tri-Party Agreement Milestone M-45-03C, "Complete Full Scale Saltcake Waste Retrieval Technology Demonstration at S-112"
DOE Order 413.3, Program and Project Management for the Acquisition of Capital Assets,

RPP-7526, Preliminary Engineering Report for the 241-S-112 Retrieval System

RPP-8791, PRELIMINARY PROJECT EXECUTION PLAN FOR TANK 241-S-112 SALTCAKE WASTE RETRIEVAL TECHNOLOGY DEMONSTRATION

Cost Estimating Input Sheet

Task Title:	Pump Removal	Revision Number:	b
Sched Act Id:	12.03.10	WBS Number:	A5.02.01.02.07.12.03
Activity Owner:	SST Retrieval	PBS Number:	
Prepared By:	JR Biggs/AREngelman		

RPP-7825, Single-Shell Tank S-112 Full Scale Saltcake Waste Retrieval technology Demonstration Functions and Requirements

Cost Estimating Input Sheet

Task Title:	Pump Removal
Sched Act Id:	12.03.10
Activity Owner:	SST Retrieval
Prepared By:	JR Biggs/AREngelman
Revision Number:	b
WBS Number:	A5.02.01.02.07.12.03
PBS Number:	

P3 Activity	Sub Task	P3 Res Code	ResourceType	Fiscal Year	SubtaskDescription	Org Code	Seq Num	COA	Note Ref	Budget Qty	Qty Type	Total Qty
TT28305CA1	B1	98L	RPP/CH2M Cogema	2003	Work Package and EWP Equipment Removal Planner 180hr @ $83/hr	7T300		D000		14.90	$K	14,900.00
TT28305CA1	B1	LC02B	RPP/CH2M - Electricians	2003	Work Package and EWP Equipment Removal	7T300		D000		32.00	HRS	1,345.92
TT28305CA1	B1	LC08B	RPP/CH2M - Plumbers & Pipefitters	2003	Work Package and EWP Equipment Removal	7T300		D000		48.00	HRS	1,896.96
TT28305CA1	B1	LE05E	RPP/CH2M - Environmental Engineers	2003	Work Package and EWP Equipment Removal	7T300		D000		24.00	HRS	1,171.68
TT28305CA1	B1	LE11E	RPP/CH2M - Quality Control Engrs	2003	Work Package and EWP Equipment Removal	7T300		D000		24.00	HRS	1,226.88
TT28305CA1	B1	LE12E	RPP/CH2M - Safety Engineers	2003	Work Package and EWP Equipment Removal	7T300		D000		24.00	HRS	1,174.80
TT28305CA1	B1	LE13E	RPP/CH2M - Other Engineers	2003	Work Package and EWP Equipment Removal	7T300		D000		24.00	HRS	1,490.16
TT28305CA1	B1	LG03B	RPP/CH2M - Office Clks(Specialized)	2003	Work Package and EWP Equipment Removal	7T300		D000		12.00	HRS	400.08
TT28305CA1	B1	LM01E	RPP/CH2M - First Line Supervisors	2003	JRG Review of Package	7T300		D000		8.00	HRS	376.56
TT28305CA1	B1	LM01E	RPP/CH2M - First Line Supervisors	2003	Work Package and EWP Equipment Removal	7T300		D000		24.00	HRS	1,129.68
TT28305CA1	B1	LM02E	RPP/CH2M - Managers & Executives	2003	JRG Review of Package	7T300		D000		8.00	HRS	551.92
TT28305CA1	B1	LM02E	RPP/CH2M - Managers & Executives	2003	Work Package and EWP Equipment Removal	7T300		D000		12.00	HRS	827.88
TT28305CA1	B1	LP08E	RPP/CH2M - Health Physicists	2003	JRG Review of Package	7T300		D000		16.00	HRS	799.84
TT28305CA1	B1	LP08E	RPP/CH2M - Health Physicists	2003	Work Package and EWP Equipment Removal	7T300		D000		16.00	HRS	799.84
TT28305CA1	B1	LP08E	RPP/CH2M - Health Physicists	2003	Work Package and EWP Equipment Removal	7T300		D000		24.00	HRS	1,199.76
TT28305CA1	B1	LR05B	RPP/CH2M - Nuclear Waste Process Ops	2003	Work Package and EWP Equipment Removal	7T300		D000		96.00	HRS	4,047.36
TT28305CA1	B1	LT05B	RPP/CH2M - Health Physics Techs	2003	Work Package and EWP Equipment Removal	7T300		D000		96.00	HRS	3,812.16
TT28305CA1	B2	10L	RPP/CH2M Material & Equipment	2003	Material & Consumables	7T300		D000	1	25.00	$K	25,000.00
TT28305CA1	B2	3PL	RPP/CH2M PHMC Support to RPP	2003	Equipment Removal MockUp (10Days)	7T300		D000	2,3	64.80	$K	64,800.00
TT28305CA1	B2	LC02B	RPP/CH2M - Electricians	2003	Equipment Removal MockUp (2 ea)	7T300		D000	2	96.00	HRS	4,037.76
TT28305CA1	B2	LC08B	RPP/CH2M - Plumbers & Pipefitters	2003	Equipment Removal MockUp (3 ea)	7T300		D000	2	144.00	HRS	5,690.88
TT28305CA1	B2	LE11E	RPP/CH2M - Quality Control Engrs	2003	Equipment Removal MockUp (1 ea)	7T300		D000	2	48.00	HRS	2,453.76
TT28305CA1	B2	LE12E	RPP/CH2M - Safety Engineers	2003	Equipment Removal MockUp (1 ea)	7T300		D000	2	96.00	HRS	4,699.20
TT28305CA1	B2	LE13E	RPP/CH2M - Other Engineers	2003	Equipment Removal MockUp (1 ea)	7T300		D000	2	96.00	HRS	5,960.64
TT28305CA1	B2	LM01E	RPP/CH2M - First Line Supervisors	2003	Equipment Removal MockUp (3 ea)	7T300		D000	2	288.00	HRS	13,556.16
TT28305CA1	B2	LM02E	RPP/CH2M - Managers & Executives	2003	Equipment Removal MockUp	7T300		D000	2	144.00	HRS	9,934.56

Cost Estimating Input Sheet

Task Title:	Pump Removal
Sched Act Id:	12.03.10
Activity Owner:	SST Retrieval
Prepared By:	JR Biggs/AREngelman
Revision Number:	b
WBS Number:	A5.02.01.02.07.12.03
PBS Number:	

P3 Activity	Sub Task	P3 Res Code	ResourceType	Fiscal Year	SubtaskDescription	Org Code	Seq Num	COA	Note Ref	Budget Qty	Qty Type	Total Qty
TT28305CA1	B2	LR05B	RPP/CH2M - Nuclear Waste Process Ops	2003	Equipment Removal MockUp (12 ea)	7T300		D000	2	1,152.00	HRS	48,568.32
TT28305CA1	B2	LT05B	RPP/CH2M - Health Physics Techs	2003	Equipment Removal MockUp (8 ea)	7T300		D000	2	768.00	HRS	30,497.28
TT28305CA1	B2	LT06B	RPP/CH2M - In Health/Safety Tech	2003	Equipment Removal MockUp (1 ea)	7T300		D000	2	48.00	HRS	1,912.80
TT28305CA1	B3	10L	RPP/CH2M Material & Equipment	2003	Material & Consumables	7T300		D000	1	25.00	$K	25,000.00
TT28305CA1	B3	3PL	RPP/CH2M PHMC Support to RPP	2003	Equipment Staging in Farm (3 days)	7T300		D000	2,3	19.40	$K	19,400.00
TT28305CA1	B3	LC02B	RPP/CH2M - Electricians	2003	Equipment Staging in Farm (1 ea)	7T300		D000	2	29.00	HRS	1,219.74
TT28305CA1	B3	LC08B	RPP/CH2M - Plumbers & Pipefitters	2003	Equipment Staging in Farm (2 ea)	7T300		D000	2	58.00	HRS	2,292.16
TT28305CA1	B3	LM01E	RPP/CH2M - First Line Supervisors	2003	Equipment Staging in Farm (2 ea)	7T300		D000	2	58.00	HRS	2,730.06
TT28305CA1	B3	LR05B	RPP/CH2M - Nuclear Waste Process Ops	2003	Equipment Staging in Farm (5 ea)	7T300		D000	2	144.00	HRS	6,071.04
TT28305CA1	B3	LT05B	RPP/CH2M - Health Physics Techs	2003	Equipment Staging in Farm (2 ea)	7T300		D000	2	58.00	HRS	2,303.18
TT28305CA1	B4	3PL	RPP/CH2M PHMC Support to RPP	2003	Equipment Removal	7T300		D000	2,3	51.80	$K	51,800.00
TT28305CA1	B4	LC02B	RPP/CH2M - Electricians	2003	Equipment Removal (2 ea)	7T300		D000	2	154.00	HRS	6,477.24
TT28305CA1	B4	LC08B	RPP/CH2M - Plumbers & Pipefitters	2003	Equipment Removal (2 ea)	7T300		D000	2	154.00	HRS	6,086.08
TT28305CA1	B4	LE05E	RPP/CH2M - Environmental Engineers	2003	Equipment Removal (1 ea)	7T300		D000	2	39.00	HRS	1,903.98
TT28305CA1	B4	LE11E	RPP/CH2M - Quality Control Engrs	2003	Equipment Removal (1 ea)	7T300		D000	2	39.00	HRS	1,993.68
TT28305CA1	B4	LE12E	RPP/CH2M - Safety Engineers	2003	Equipment Removal (1 ea)	7T300		D000	2	77.00	HRS	3,769.15
TT28305CA1	B4	LE13E	RPP/CH2M - Other Engineers	2003	Equipment Removal (1 ea)	7T300		D000	2	77.00	HRS	4,780.93
TT28305CA1	B4	LM01E	RPP/CH2M - First Line Supervisors	2003	Equipment Removal (3 ea)	7T300		D000	2	231.00	HRS	10,873.17
TT28305CA1	B4	LM02E	RPP/CH2M - Managers & Executives	2003	Equipment Removal (2 ea)	7T300		D000	2	77.00	HRS	5,312.23
TT28305CA1	B4	LR05B	RPP/CH2M - Nuclear Waste Process Ops	2003	Equipment Removal (12 ea)	7T300		D000	2	1,152.00	HRS	48,568.32
TT28305CA1	B4	LT05B	RPP/CH2M - Health Physics Techs	2003	Equipment Removal (8 ea)	7T300		D000	2	615.00	HRS	24,421.65
TT28305CA1	B4	LT06B	RPP/CH2M - In Health/Safety Tech	2003	Equipment Removal (1 ea)	7T300		D000	2	39.00	HRS	1,554.15
TT28305CA1	B5	3PL	RPP/CH2M PHMC Support to RPP	2003	Equipment Demobilization	7T300		D000	3	19.40	$K	19,400.00
TT28305CA1	B5	LC02B	RPP/CH2M - Electricians	2003	Equipment Demobilization	7T300		D000	2	29.00	HRS	1,219.74
TT28305CA1	B5	LC02B	RPP/CH2M - Electricians	2003	Equipment Demobilization	7T300		D000	2	29.00	HRS	1,219.74
TT28305CA1	B5	LC08B	RPP/CH2M - Plumbers & Pipefitters	2003	Equipment Demobilization	7T300		D000	2	58.00	HRS	2,292.16

Cost Estimating Input Sheet

Task Title:	Pump Removal
Sched Act Id:	12.03.10
Activity Owner:	SST Retrieval
Prepared By:	JR Biggs/AREngelman
Revision Number:	b
WBS Number:	A5.02.01.02.07.12.03
PBS Number:	

P3 Activity	Sub Task	P3 Res Code	ResourceType	Fiscal Year	SubtaskDescription	Org Code	Seq Num	COA	Note Ref	Budget Qty	Qty Type	Total Qty
TT28305CA1	B5	LM01E	RPP/CH2M - First Line Supervisors	2003	Equipment Demobilization	7T300		D000	2	58.00	HRS	2,730.06
TT28305CA1	B5	LR05B	RPP/CH2M - Nuclear Waste Process Ops	2003	Equipment Demobilization	7T300		D000	2	144.00	HRS	6,071.04
TT28305CA1	B5	LT05B	RPP/CH2M - Health Physics Techs	2003	Equipment Demobilization	7T300		D000	2	58.00	HRS	2,303.18
TT28305CA1	B6	98L	RPP/CH2M Cogema	2003	Work Package Closeout- Planner 32 hr @ $83/hr	7T300		D000		2.70	$K	2,700.00
TT28305CA1	B6	LC02B	RPP/CH2M - Electricians	2003	Work Package Closeout	7T300		D000		8.00	HRS	336.48
TT28305CA1	B6	LC08B	RPP/CH2M - Plumbers & Pipefitters	2003	Work Package Closeout	7T300		D000		8.00	HRS	316.16
TT28305CA1	B6	LE05E	RPP/CH2M - Environmental Engineers	2003	Work Package Closeout	7T300		D000		8.00	HRS	390.56
TT28305CA1	B6	LE11E	RPP/CH2M - Quality Control Engrs	2003	Work Package Closeout	7T300		D000		8.00	HRS	408.96
TT28305CA1	B6	LE12E	RPP/CH2M - Safety Engineers	2003	Work Package Closeout	7T300		D000		8.00	HRS	391.60
TT28305CA1	B6	LG03B	RPP/CH2M - Office Clks(Specialized)	2003	Work Package Closeout	7T300		D000		8.00	HRS	266.72
TT28305CA1	B6	LM01E	RPP/CH2M - First Line Supervisors	2003	Work Package Closeout	7T300		D000		24.00	HRS	1,129.68
TT28305CA1	B6	LM02E	RPP/CH2M - Managers & Executives	2003	Work Package Closeout	7T300		D000		8.00	HRS	551.92
TT28305CA1	B6	LP08E	RPP/CH2M - Health Physicists	2003	Work Package Closeout	7T300		D000		8.00	HRS	399.92
TT28305CA1	B6	LR05B	RPP/CH2M - Nuclear Waste Process Ops	2003	Work Package Closeout	7T300		D000		32.00	HRS	1,349.12
TT28305CA1	B6	LT05B	RPP/CH2M - Health Physics Techs	2003	Work Package Closeout	7T300		D000		32.00	HRS	1,270.72
TT28305CA1	B6	LT06B	RPP/CH2M - In Health/Safety Tech	2003	Work Package Closeout	7T300		D000		8.00	HRS	318.80

Cost Estimating Input Sheet

Task Title:	Pump Removal	Revision Number:	b
Sched Act Id:	12.03.10	WBS Number:	A5.02.01.02.07.12.03
Activity Owner:	SST Retrieval	PBS Number:	
Prepared By:	JR Biggs/AREngelman		

7.0 Notes:

1. Consumables such as plastic sheeting, tape, containments, and waste bags are included in this figure. Small tools and PPE are provided by Operations and are excluded from this estimate.

2. All labor hours have been increased by 20% to account for unexpected occurances such as weather and resource availability, based on Interim Stabilization experience.Hours include pre and post job activity including pre-job briefings and dress/undress as applicable.

3. The crane crew consists of the following personnel and equipment:
Rates are based on the FY01 published site indirect pool rates
1 - Management PIC (Person in Charge) ($130/hr)
1 - Teamster - Heavy Load Truck Driver ($81/hr)
1 - Operator - Crane Operator ($81/hr)
4 - Ironworker/Riggers - Rig pump for lifting, flag crane operator, etc ($324/hr)
1 - 33T Crane/truck/trailer - ($500/day or $55.56/hr.)
Therefore:
The total Crane and Rigging Crew Hourly Rate = $672/hr rounded
Daily rate = 8 hrs X $672 = $5,376

Cost Estimating Input Sheet

Task Title:	PIC Skid	Revision Number:	b
Sched Act Id:	12.03.11	WBS Number:	A5.02.01.02.07.12.03
Activity Owner:	SST Retrieval	PBS Number:	
Prepared By:	JR Biggs/AREngelman		

1.0 Scope Description:

Plan, install and connect the S-112 PIC Skid on the tank. This activity includes:

A1) Perform Work Package Planning
A2) Staging of a crane in the farm.
A3) Installation of the skid and connection to tank farm systems (water, power, controls)
A4) Close Out Work Packages

2.0 Estimating Assumptions and Exclusions:

A - Current standard practices for rad con and industrial heatlth & safety remains unchanged
A - All work will be accomplished by personnel who are familiar with Tank Farm systems and equipment.
A - A Principle/Senior COG Engineer dedicated to the installation will be provided.
A - Pit entries will be required.
A - Major events such as: radiation release, exhauster shut down or ammonia gas release are not anticipated.

3.0 Basis of Estimate:

Estimates are based on historical experience for past tank farm work in the interim stabilization program. Where applicable Lessons Learned from the installation of the transfer system in Tank AW-104 have been incorporated in to estimates and planning.

4.0 Estimate Stage and Method:

Preliminary/Analogy

5.0 Legal Drivers/Reference Documents:

Tri-Party Agreement Milestone M-45-03C, "Complete Full Scale Saltcake Waste Retrieval Technology Demonstration at S-112"
DOE Order 413.3, Program and Project Management for the Acquisition of Capital Assets,

RPP-7526, Preliminary Engineering Report for the 241-S-112 Retrieval System

RPP-8791, PRELIMINARY PROJECT EXECUTION PLAN FOR TANK 241-S-112 SALTCAKE WASTE RETRIEVAL TECHNOLOGY DEMONSTRATION

RPP-7825, Single-Shell Tank S-112 Full Scale Saltcake Waste Retrieval technology Demonstration Functions and Requirements

Cost Estimating Input Sheet

Task Title:	PIC Skid	Revision Number:	b
Sched Act Id:	12.03.11	WBS Number:	A5.02.01.02.07.12.03
Activity Owner:	SST Retrieval	PBS Number:	
Prepared By:	JR Biggs/AREngelman		

P3 Activity	Sub Task	P3 Res Code	ResourceType	Fiscal Year	SubtaskDescription	Org Code	Seq Num	COA	Note Ref	Budget Qty	Qty Type	Total Qty
TT28305CA1	A	10L	RPP/CH2M Material & Equipment	2003	Material & Consumables	7T300		D000	1	4.00	$K	4,000.00
TT28305CA1	A1	98L	RPP/CH2M Cogema	2003	Work Package and EWP Review Planner 40hr @ $83/hr	7T300		D000		3.30	$K	3,300.00
TT28305CA1	A1	LC08B	RPP/CH2M - Plumbers & Pipefitters	2003	Work Package and EWP Review	7T300		D000		16.00	HRS	632.32
TT28305CA1	A1	LE05E	RPP/CH2M - Environmental Engineers	2003	Work Package and EWP Review	7T300		D000		8.00	HRS	390.56
TT28305CA1	A1	LE11E	RPP/CH2M - Quality Control Engrs	2003	Work Package and EWP Review	7T300		D000		8.00	HRS	408.96
TT28305CA1	A1	LE12E	RPP/CH2M - Safety Engineers	2003	Work Package and EWP Review	7T300		D000		8.00	HRS	391.60
TT28305CA1	A1	LE13E	RPP/CH2M - Other Engineers	2003	Work Package and EWP Review	7T300		D000		16.00	HRS	993.44
TT28305CA1	A1	LG03B	RPP/CH2M - Office Clks(Specialized)	2003	Work Package and EWP Review	7T300		D000		4.00	HRS	133.36
TT28305CA1	A1	LM01E	RPP/CH2M - First Line Supervisors	2003	Work Package and EWP Review	7T300		D000		8.00	HRS	376.56
TT28305CA1	A1	LM02E	RPP/CH2M - Managers & Executives	2003	Work Package and EWP Review	7T300		D000		8.00	HRS	551.92
TT28305CA1	A1	LP08E	RPP/CH2M - Health Physicists	2003	Work Package and EWP Review	7T300		D000		4.00	HRS	199.96
TT28305CA1	A1	LR05B	RPP/CH2M - Nuclear Waste Process Ops	2003	Work Package and EWP Review	7T300		D000		16.00	HRS	674.56
TT28305CA1	A1	LT05B	RPP/CH2M - Health Physics Techs	2003	Work Package and EWP Review	7T300		D000		16.00	HRS	635.36
TT28305CA1	A2	3PL	RPP/CH2M PHMC Support to RPP	2003	Stage equip - Crane (1 day)	7T300		D000	2,3	6.50	$K	6,500.00
TT28305CA1	A2	LM01E	RPP/CH2M - First Line Supervisors	2003	Field work, 1 ea. Ops. PIC	7T300		D000	2	10.00	HRS	470.70
TT28305CA1	A2	LR05B	RPP/CH2M - Nuclear Waste Process Ops	2003	Field work, 4 ea. Operators	7T300		D000	2	39.00	HRS	1,644.24
TT28305CA1	A2	LT05B	RPP/CH2M - Health Physics Techs	2003	Field work, 2 ea. HPTs	7T300		D000	2	20.00	HRS	794.20
TT28305CA1	A3	3PL	RPP/CH2M PHMC Support to RPP	2003	Stage equip - Crane (2 day)	7T300		D000	2,3	13.00	$K	13,000.00
TT28305CA1	A3	LC02B	RPP/CH2M - Electricians	2003	Field work, 2 ea. Electricians	7T300		D000	2	192.00	HRS	8,075.52
TT28305CA1	A3	LC08B	RPP/CH2M - Plumbers & Pipefitters	2003	Field work, 2 ea. Pipefitters	7T300		D000	2	192.00	HRS	7,587.84
TT28305CA1	A3	LE11E	RPP/CH2M - Quality Control Engrs	2003	Field work, 1 ea. Quality Control	7T300		D000	2	48.00	HRS	2,453.76
TT28305CA1	A3	LE13E	RPP/CH2M - Other Engineers	2003	Field work, 1 ea. COG Engineer	7T300		D000	2	72.00	HRS	4,470.48
TT28305CA1	A3	LM01E	RPP/CH2M - First Line Supervisors	2003	Field work, 1 ea. Ops. PIC	7T300		D000	2	96.00	HRS	4,518.72
TT28305CA1	A3	LM01E	RPP/CH2M - First Line Supervisors	2003	Field work, 1 ea. HPT Supervisor	7T300		D000	2	29.00	HRS	1,365.03
TT28305CA1	A3	LM03E	RPP/CH2M - Project & Program Mgrs	2003	Senior Supervisory Watch	7T300		D000	2	29.00	HRS	1,999.55
TT28305CA1	A3	LR05B	RPP/CH2M - Nuclear Waste Process Ops	2003	Field work, 2 ea. Operators	7T300		D000	2	192.00	HRS	8,094.72

Cost Estimating Input Sheet

Task Title:	PIC Skid	Revision Number:	b
Sched Act Id:	12.03.11	WBS Number:	A5.02.01.02.07.12.03
Activity Owner:	SST Retrieval	PBS Number:	
Prepared By:	JR Biggs/AREngelman		

P3 Activity	Sub Task	P3 Res Code	ResourceType	Fiscal Year	SubtaskDescription	Org Code	Seq Num	COA	Note Ref	Budget Qty	Qty Type	Total Qty
TT28305CA1	A3	LT05B	RPP/CH2M - Health Physics Techs	2003	Field work, 2 ea. HPTs	7T300		D000	2	192.00	HRS	7,624.32
TT28305CA1	A4	98L	RPP/CH2M Cogema	2003	Close Out Work Package -Planner 16 hr @ $83/hr	7T300		D000		1.30	$K	1,300.00
TT28305CA1	A4	LE13E	RPP/CH2M - Other Engineers	2003	Close Out Work Package	7T300		D000		8.00	HRS	496.72
TT28305CA1	A4	LM01E	RPP/CH2M - First Line Supervisors	2003	Close Out Work Package	7T300		D000		8.00	HRS	376.56
TT28305CA1	A4	LP08E	RPP/CH2M - Health Physicists	2003	Close Out Work Package	7T300		D000		4.00	HRS	199.96

Cost Estimating Input Sheet

Task Title:	PIC Skid	Revision Number:	b
Sched Act Id:	12.03.11	WBS Number:	A5.02.01.02.07.12.03
Activity Owner:	SST Retrieval	PBS Number:	
Prepared By:	JR Biggs/AREngelman		

7.0 Notes:

1. Consumables such as plastic sheeting, tape, containments, and waste bags are included in this figure. Small tools and PPE are provided by Operations and are excluded from this estimate.

2. All labor hours have been increased by 20% to account for unexpected occurances such as weather and resource availability, based on Interim Stabilization experience.Hours include pre and post job activity including pre-job briefings and dress/undress as applicable.

3. The crane crew consists of the following personnel and equipment:
Rates are based on the FY01 published site indirect pool rates
1 - Management PIC (Person in Charge) ($130/hr)
1 - Teamster - Heavy Load Truck Driver ($81/hr)
1 - Operator - Crane Operator ($81/hr)
4 - Ironworker/Riggers - Rig pump for lifting, flag crane operator, etc ($324/hr)
1 - 33T Crane/truck/trailer - ($500/day or $55.56/hr.)
Therefore:
The total Crane and Rigging Crew Hourly Rate = $672/hr rounded
Daily rate = 8 hrs X $672 = $5,376

Cost Estimating Input Sheet

Task Title:	Pump Installation	Revision Number:	b
Sched Act Id:	12.03.12	WBS Number:	A5.02.01.02.07.12.03
Activity Owner:	SST Retrieval	PBS Number:	
Prepared By:	JR Biggs/AREngelman		

1.0 Scope Description:

Plan and install a new pump in Tank S-112. This activity includes:

C1) Work Package planning to include an EWP and JRG review.
C2) Staging equipment and the crane in the farm (2 Shifts).
C3) Pump Installation (2 Shifts, 1 intrusive/ 1 ex-tank).
-Lifting the S-112 Cover blocks.
-Installing the Pump.
-Electrically connecting the pump.
-Cover Block Installation.
C4) Equipment demobilization (1 Shift).
C5) Work Package closeout.

2.0 Estimating Assumptions and Exclusions:

A - Current standard practices for rad con and industrial heatlth & safety remains unchanged
A - All work will be accomplished by personnel who are familiar with Tank Farm systems and equipment.
A - A Principle/Senior COG Engineer dedicated to the installation will be provided.
A - Pit entries will be required.
A - Major events such as: radiation release, exhauster shut down or ammonia gas release are not anticipated.

3.0 Basis of Estimate:

Estimates are based on historical experience for past tank farm work in the interim stabilization program. Where applicable Lessons Learned from the removal of the transfer system in Tank AW-104 have been incorporated in to estimates and planning.

4.0 Estimate Stage and Method:

Preliminary/Analogy

5.0 Legal Drivers/Reference Documents:

Tri-Party Agreement Milestone M-45-03C, "Complete Full Scale Saltcake Waste Retrieval Technology Demonstration at S-112"
DOE Order 413.3, Program and Project Management for the Acquisition of Capital Assets,

RPP-7526, Preliminary Engineering Report for the 241-S-112 Retrieval System

RPP-8791, PRELIMINARY PROJECT EXECUTION PLAN FOR TANK 241-S-112 SALTCAKE WASTE RETRIEVAL TECHNOLOGY DEMONSTRATION

RPP-7825, Single-Shell Tank S-112 Full Scale Saltcake Waste Retrieval technology Demonstration Functions and Requirements

Cost Estimating Input Sheet

Task Title:	Pump Installation	Revision Number:	b
Sched Act Id:	12.03.12	WBS Number:	A5.02.01.02.07.12.03
Activity Owner:	SST Retrieval	PBS Number:	
Prepared By:	JR Biggs/AREngelman		

P3 Activity	Sub Task	P3 Res Code	ResourceType	Fiscal Year	SubtaskDescription	Org Code	Seq Num	COA	Note Ref	Budget Qty	Qty Type	Total Qty
TT28305CA1	C1	98L	RPP/CH2M Cogema	2003	Work Package and EWP Equipment Removal -Planner 60hr @ $83/hr	7T300		D000		5.00	$K	5,000.00
TT28305CA1	C1	LC02B	RPP/CH2M - Electricians	2003	Work Package and EWP Equipment Removal	7T300		D000		8.00	HRS	336.48
TT28305CA1	C1	LC08B	RPP/CH2M - Plumbers & Pipefitters	2003	Work Package and EWP Equipment Removal	7T300		D000		8.00	HRS	316.16
TT28305CA1	C1	LE05E	RPP/CH2M - Environmental Engineers	2003	Work Package and EWP Equipment Removal	7T300		D000		8.00	HRS	390.56
TT28305CA1	C1	LE11E	RPP/CH2M - Quality Control Engrs	2003	Work Package and EWP Equipment Removal	7T300		D000		8.00	HRS	408.96
TT28305CA1	C1	LE12E	RPP/CH2M - Safety Engineers	2003	Work Package and EWP Equipment Removal	7T300		D000		8.00	HRS	391.60
TT28305CA1	C1	LE13E	RPP/CH2M - Other Engineers	2003	Work Package and EWP Equipment Removal	7T300		D000		8.00	HRS	496.72
TT28305CA1	C1	LG03B	RPP/CH2M - Office Clks(Specialized)	2003	Work Package and EWP Equipment Removal	7T300		D000		12.00	HRS	400.08
TT28305CA1	C1	LM01E	RPP/CH2M - First Line Supervisors	2003	Work Package and EWP Equipment Removal	7T300		D000		16.00	HRS	753.12
TT28305CA1	C1	LM01E	RPP/CH2M - First Line Supervisors	2003	JRG Review of Package	7T300		D000		8.00	HRS	376.56
TT28305CA1	C1	LM02E	RPP/CH2M - Managers & Executives	2003	Work Package and EWP Equipment Removal	7T300		D000		8.00	HRS	551.92
TT28305CA1	C1	LM02E	RPP/CH2M - Managers & Executives	2003	JRG Review of Package	7T300		D000		8.00	HRS	551.92
TT28305CA1	C1	LP08E	RPP/CH2M - Health Physicists	2003	JRG Review of Package	7T300		D000		8.00	HRS	399.92
TT28305CA1	C1	LP08E	RPP/CH2M - Health Physicists	2003	Work Package and EWP Equipment Removal	7T300		D000		8.00	HRS	399.92
TT28305CA1	C1	LR05B	RPP/CH2M - Nuclear Waste Process Ops	2003	Work Package and EWP Equipment Removal	7T300		D000		16.00	HRS	674.56
TT28305CA1	C1	LT05B	RPP/CH2M - Health Physics Techs	2003	Work Package and EWP Equipment Removal	7T300		D000		16.00	HRS	635.36
TT28305CA1	C2	3PL	RPP/CH2M PHMC Support to RPP	2003	Equipment Staging in Farm (1 days)	7T300		D000	2,3	6.50	$K	6,500.00
TT28305CA1	C2	LC02B	RPP/CH2M - Electricians	2003	Equipment Staging in Farm (1 ea)	7T300		D000	2	10.00	HRS	420.60
TT28305CA1	C2	LM01E	RPP/CH2M - First Line Supervisors	2003	Equipment Staging in Farm (2 ea)	7T300		D000	2	20.00	HRS	941.40
TT28305CA1	C2	LR05B	RPP/CH2M - Nuclear Waste Process Ops	2003	Equipment Staging in Farm (5 ea)	7T300		D000	2	48.00	HRS	2,023.68
TT28305CA1	C2	LT05B	RPP/CH2M - Health Physics Techs	2003	Equipment Staging in Farm (2 ea)	7T300		D000	2	20.00	HRS	794.20
TT28305CA1	C3	10L	RPP/CH2M Material & Equipment	2003	Material & Consumables	7T300		D000	1	4.00	$K	4,000.00
TT28305CA1	C3	3PL	RPP/CH2M PHMC Support to RPP	2003	Equipment Installation (8 days)	7T300		D000	2,3	51.80	$K	51,800.00
TT28305CA1	C3	LC02B	RPP/CH2M - Electricians	2003	Equipment Installation (2 ea)	7T300		D000	2	39.00	HRS	1,640.34
TT28305CA1	C3	LC08B	RPP/CH2M - Plumbers & Pipefitters	2003	Equipment Installation (2 ea)	7T300		D000	2	39.00	HRS	1,541.28
TT28305CA1	C3	LE05E	RPP/CH2M - Environmental Engineers	2003	Equipment Installation (1 ea)	7T300		D000	2	10.00	HRS	488.20

Cost Estimating Input Sheet

Task Title:	Pump Installation	Revision Number:	b
Sched Act Id:	12.03.12	WBS Number:	A5.02.01.02.07.12.03
Activity Owner:	SST Retrieval	PBS Number:	
Prepared By:	JR Biggs/AREngelman		

P3 Activity	Sub Task	P3 Res Code	ResourceType	Fiscal Year	SubtaskDescription	Org Code	Seq Num	COA	Note Ref	Budget Qty	Qty Type	Total Qty
TT28305CA1	C3	LE11E	RPP/CH2M - Quality Control Engrs	2003	Equipment Installation (1 ea)	7T300		D000	2	20.00	HRS	1,022.40
TT28305CA1	C3	LE12E	RPP/CH2M - Safety Engineers	2003	Equipment Installation (1 ea)	7T300		D000	2	10.00	HRS	489.50
TT28305CA1	C3	LE13E	RPP/CH2M - Other Engineers	2003	Equipment Installation (1 ea)	7T300		D000	2	20.00	HRS	1,241.80
TT28305CA1	C3	LM01E	RPP/CH2M - First Line Supervisors	2003	Equipment Installation (2 ea)	7T300		D000	2	39.00	HRS	1,835.73
TT28305CA1	C3	LM02E	RPP/CH2M - Managers & Executives	2003	Equipment Installation (1 ea)	7T300		D000	2	20.00	HRS	1,379.80
TT28305CA1	C3	LR05B	RPP/CH2M - Nuclear Waste Process Ops	2003	Equipment Installation (8 ea)	7T300		D000	2	154.00	HRS	6,492.64
TT28305CA1	C3	LT05B	RPP/CH2M - Health Physics Techs	2003	Equipment Installation (3 ea)	7T300		D000	2	58.00	HRS	2,303.18
TT28305CA1	C3	LT06B	RPP/CH2M - In Health/Safety Tech	2003	Equipment Installation (1 ea)	7T300		D000	2	10.00	HRS	398.50
TT28305CA1	C4	3PL	RPP/CH2M PHMC Support to RPP	2003	Equipment Demobilization	7T300		D000	2,3	5.40	$K	5,400.00
TT28305CA1	C4	LC02B	RPP/CH2M - Electricians	2003	Equipment Demobilization	7T300		D000	2	20.00	HRS	841.20
TT28305CA1	C4	LC08B	RPP/CH2M - Plumbers & Pipefitters	2003	Equipment Demobilization	7T300		D000	2	20.00	HRS	790.40
TT28305CA1	C4	LM01E	RPP/CH2M - First Line Supervisors	2003	Equipment Demobilization	7T300		D000	2	20.00	HRS	941.40
TT28305CA1	C4	LR05B	RPP/CH2M - Nuclear Waste Process Ops	2003	Equipment Demobilization	7T300		D000	2	48.00	HRS	2,023.68
TT28305CA1	C4	LT05B	RPP/CH2M - Health Physics Techs	2003	Equipment Demobilization	7T300		D000	2	29.00	HRS	1,151.59
TT28305CA1	C5	98L	RPP/CH2M Cogema	2003	Work Package Closeout - Planner 32 hr @ $83/hr	7T300		D000		2.70	$K	2,700.00
TT28305CA1	C5	LC02B	RPP/CH2M - Electricians	2003	Work Package Closeout	7T300		D000		8.00	HRS	336.48
TT28305CA1	C5	LC08B	RPP/CH2M - Plumbers & Pipefitters	2003	Work Package Closeout	7T300		D000		8.00	HRS	316.16
TT28305CA1	C5	LE05E	RPP/CH2M - Environmental Engineers	2003	Work Package Closeout	7T300		D000		8.00	HRS	390.56
TT28305CA1	C5	LE11E	RPP/CH2M - Quality Control Engrs	2003	Work Package Closeout	7T300		D000		8.00	HRS	408.96
TT28305CA1	C5	LE12E	RPP/CH2M - Safety Engineers	2003	Work Package Closeout	7T300		D000		8.00	HRS	391.60
TT28305CA1	C5	LG03B	RPP/CH2M - Office Clks(Specialized)	2003	Work Package Closeout	7T300		D000		8.00	HRS	266.72
TT28305CA1	C5	LM01E	RPP/CH2M - First Line Supervisors	2003	Work Package Closeout	7T300		D000		24.00	HRS	1,129.68
TT28305CA1	C5	LM02E	RPP/CH2M - Managers & Executives	2003	Work Package Closeout	7T300		D000		8.00	HRS	551.92
TT28305CA1	C5	LP08E	RPP/CH2M - Health Physicists	2003	Work Package Closeout	7T300		D000		8.00	HRS	399.92
TT28305CA1	C5	LR05B	RPP/CH2M - Nuclear Waste Process Ops	2003	Work Package Closeout	7T300		D000		16.00	HRS	674.56
TT28305CA1	C5	LT05B	RPP/CH2M - Health Physics Techs	2003	Work Package Closeout	7T300		D000		16.00	HRS	635.36

Cost Estimating Input Sheet

Task Title:	Pump Installation	Revision Number:	b
Sched Act Id:	12.03.12	WBS Number:	A5.02.01.02.07.12.03
Activity Owner:	SST Retrieval	PBS Number:	
Prepared By:	JR Biggs/AREngelman		

7.0 Notes:

1. Consumables such as plastic sheeting, tape, containments, and waste bags are included in this figure. Small tools and PPE are provided by Operations and are excluded from this estimate.

2. All labor hours have been increased by 20% to account for unexpected occurances such as weather and resource availability, based on Interim Stabilization experience.Hours include pre and post job activity including pre-job briefings and dress/undress as applicable.

3. The crane crew consists of the following personnel and equipment:
Rates are based on the FY01 published site indirect pool rates
1 - Management PIC (Person in Charge) ($130/hr)
1 - Teamster - Heavy Load Truck Driver ($81/hr)
1 - Operator - Crane Operator ($81/hr)
4 - Ironworker/Riggers - Rig pump for lifting, flag crane operator, etc ($324/hr)
1 - 33T Crane/truck/trailer - ($500/day or $55.56/hr.)
Therefore:
The total Crane and Rigging Crew Hourly Rate = $672/hr rounded
Daily rate = 8 hrs X $672 = $5,376

Cost Estimating Input Sheet

Task Title:	S Farm Transfer System	Revision Number:	b
Sched Act Id:	12.03.13	WBS Number:	A5.02.01.02.07.12.03
Activity Owner:	SST Retrieval	PBS Number:	
Prepared By:	JR Biggs/AREngelman		

1.0 Scope Description:

This task includes resources to install and replace transfers systems. This includes:

A. Work planning of three work packages
B. Installation of a new hose-in-hose from SA to SY-A pits. (This is a multi section hose)
C. Removal and replacement of hoses from S-112 to SC pit and from SC to SA pits.
D. Work package closeout

2.0 Estimating Assumptions and Exclusions:

A - Current standard practices for rad con and industrial heatlth & safety remains unchanged
A - All work will be accomplished by personnel who are familiar with Tank Farm systems and equipment.
A - A Principle/Senior COG Engineer dedicated to the installation will be provided.
A - Pit entries will be required.
A - Major events such as: radiation release, exhauster shut down or ammonia gas release are not anticipated.

3.0 Basis of Estimate:

Estimates are based on historical experience for past tank farm work in the interim stabilization program. Where applicable Lessons Learned and actual costs from field installations have been incorporated in to estimates and planning.

4.0 Estimate Stage and Method:

Preliminary/Analogy

5.0 Legal Drivers/Reference Documents:

Tri-Party Agreement Milestone M-45-03C, "Complete Full Scale Saltcake Waste Retrieval Technology Demonstration at S-112"
DOE Order 413.3, Program and Project Management for the Acquisition of Capital Assets,

RPP-7526, Preliminary Engineering Report for the 241-S-112 Retrieval System

RPP-8791, PRELIMINARY PROJECT EXECUTION PLAN FOR TANK 241-S-112 SALTCAKE WASTE RETRIEVAL TECHNOLOGY DEMONSTRATION

RPP-7825, Single-Shell Tank S-112 Full Scale Saltcake Waste Retrieval technology Demonstration Functions and Requirements

Cost Estimating Input Sheet

Task Title:	S Farm Transfer System
Sched Act Id:	12.03.13
Activity Owner:	SST Retrieval
Prepared By:	JR Biggs/AREngelman
Revision Number:	b
WBS Number:	A5.02.01.02.07.12.03
PBS Number:	

P3 Activity	Sub Task	P3 Res Code	ResourceType	Fiscal Year	SubtaskDescription	Org Code	Seq Num	COA	Note Ref	Budget Qty	Qty Type	Total Qty
TT28305CA1	A	98L	RPP/CH2M Cogema	2003	Work Package and EWP Review (3) Planner 180hr @ $90/hr	7T300		D000		16.20	$K	16,200.00
TT28305CA1	A	LC08B	RPP/CH2M - Plumbers & Pipefitters	2003	Work Package and EWP Review (3)	7T300		D000		72.00	HRS	2,845.44
TT28305CA1	A	LE05E	RPP/CH2M - Environmental Engineers	2003	Work Package and EWP Review (3)	7T300		D000		72.00	HRS	3,515.04
TT28305CA1	A	LE11E	RPP/CH2M - Quality Control Engrs	2003	Work Package and EWP Review (3)	7T300		D000		72.00	HRS	3,680.64
TT28305CA1	A	LE12E	RPP/CH2M - Safety Engineers	2003	Work Package and EWP Review (3)	7T300		D000		72.00	HRS	3,524.40
TT28305CA1	A	LE13E	RPP/CH2M - Other Engineers	2003	Work Package and EWP Review (3)	7T300		D000		72.00	HRS	4,470.48
TT28305CA1	A	LG03B	RPP/CH2M - Office Clks(Specialized)	2003	Work Package and EWP Review (3)	7T300		D000		36.00	HRS	1,200.24
TT28305CA1	A	LM01E	RPP/CH2M - First Line Supervisors	2003	JRG Review of Package (3)	7T300		D000		24.00	HRS	1,129.68
TT28305CA1	A	LM01E	RPP/CH2M - First Line Supervisors	2003	Work Package and EWP Review (3)	7T300		D000		72.00	HRS	3,389.04
TT28305CA1	A	LM02E	RPP/CH2M - Managers & Executives	2003	JRG Review of Package (3)	7T300		D000		24.00	HRS	1,655.76
TT28305CA1	A	LM02E	RPP/CH2M - Managers & Executives	2003	Work Package and EWP Review (3)	7T300		D000		36.00	HRS	2,483.64
TT28305CA1	A	LP08E	RPP/CH2M - Health Physicists	2003	JRG Review of Package (3)	7T300		D000		48.00	HRS	2,399.52
TT28305CA1	A	LP08E	RPP/CH2M - Health Physicists	2003	Work Package and EWP Review (3)	7T300		D000		72.00	HRS	3,599.28
TT28305CA1	A	LR05B	RPP/CH2M - Nuclear Waste Process Ops	2003	Work Package and EWP Review (3)	7T300		D000		144.00	HRS	6,071.04
TT28305CA1	A	LT05B	RPP/CH2M - Health Physics Techs	2003	Work Package and EWP Review (3)	7T300		D000		144.00	HRS	5,718.24
TT28305CA1	B	10L	RPP/CH2M Material & Equipment	2003	Consumables	7T300		D000	1	4.00	$K	4,000.00
TT28305CA1	B	3PL	RPP/CH2M PHMC Support to RPP	2003	Crane (8 days)	7T300		D000	2,3	51.80	$K	51,800.00
TT28305CA1	B	LC02B	RPP/CH2M - Electricians	2003	Field work	7T300		D000	2	38.00	HRS	1,598.28
TT28305CA1	B	LC08B	RPP/CH2M - Plumbers & Pipefitters	2003	Field work	7T300		D000	2	154.00	HRS	6,086.08
TT28305CA1	B	LE11E	RPP/CH2M - Quality Control Engrs	2003	Field work	7T300		D000	2	77.00	HRS	3,936.24
TT28305CA1	B	LE13E	RPP/CH2M - Other Engineers	2003	Field work	7T300		D000	2	77.00	HRS	4,780.93
TT28305CA1	B	LM01E	RPP/CH2M - First Line Supervisors	2003	Field work (2)	7T300		D000	2	154.00	HRS	7,248.78
TT28305CA1	B	LR05B	RPP/CH2M - Nuclear Waste Process Ops	2003	Field work (8 Ops)	7T300		D000	2	614.00	HRS	25,886.24
TT28305CA1	B	LT05B	RPP/CH2M - Health Physics Techs	2003	Field work (2 HPT)	7T300		D000	2	192.00	HRS	7,624.32
TT28305CA1	B	LT06B	RPP/CH2M - In Health/Safety Tech	2003	Field work	7T300		D000	2	19.00	HRS	757.15
TT28305CA1	C	10L	RPP/CH2M Material & Equipment	2003	Consumables (2 installations)	7T300		D000	1	8.00	$K	8,000.00

Cost Estimating Input Sheet

Task Title:	S Farm Transfer System	Revision Number:	b
Sched Act Id:	12.03.13	WBS Number:	A5.02.01.02.07.12.03
Activity Owner:	SST Retrieval	PBS Number:	
Prepared By:	JR Biggs/AREngelman		

P3 Activity	Sub Task	P3 Res Code	ResourceType	Fiscal Year	SubtaskDescription	Org Code	Seq Num	COA	Note Ref	Budget Qty	Qty Type	Total Qty
TT28305CA1	C	3PL	RPP/CH2M PHMC Support to RPP	2003	Crane (2 @ 6 days ea.)	7T300		D000	2,3	77.80	$K	77,800.00
TT28305CA1	C	LC02B	RPP/CH2M - Electricians	2003	Field work (2)	7T300		D000	2	77.00	HRS	3,238.62
TT28305CA1	C	LC08B	RPP/CH2M - Plumbers & Pipefitters	2003	Field work (2)	7T300		D000	2	230.00	HRS	9,089.60
TT28305CA1	C	LE11E	RPP/CH2M - Quality Control Engrs	2003	Field work (2)	7T300		D000	2	115.00	HRS	5,878.80
TT28305CA1	C	LE13E	RPP/CH2M - Other Engineers	2003	Field work (2)	7T300		D000	2	115.00	HRS	7,140.35
TT28305CA1	C	LM01E	RPP/CH2M - First Line Supervisors	2003	Field work 2 ea (2)	7T300		D000	2	230.00	HRS	10,826.10
TT28305CA1	C	LR05B	RPP/CH2M - Nuclear Waste Process Ops	2003	Field work (8 Ops) (2)	7T300		D000	2	922.00	HRS	38,871.52
TT28305CA1	C	LT05B	RPP/CH2M - Health Physics Techs	2003	Field work (4 HPT) (2)	7T300		D000	2	461.00	HRS	18,306.31
TT28305CA1	C	LT06B	RPP/CH2M - In Health/Safety Tech	2003	Field work (2) 230	7T300		D000	2	19.00	HRS	757.15
TT28305CA1	C	LT06B	RPP/CH2M - In Health/Safety Tech	2003	Field work (2)	7T300		D000		58.00	HRS	2,311.30
TT28305CA1	D	98L	RPP/CH2M Cogema	2003	Close out Work Package Planner 40 hr @ $83/hr (3)	7T300		D000		10.00	$K	10,000.00
TT28305CA1	D	LC08B	RPP/CH2M - Plumbers & Pipefitters	2003	Close out Work Package (3)	7T300		D000		24.00	HRS	948.48
TT28305CA1	D	LE13E	RPP/CH2M - Other Engineers	2003	Close out Work Package (3)	7T300		D000		72.00	HRS	4,470.48
TT28305CA1	D	LM01E	RPP/CH2M - First Line Supervisors	2003	Close out Work Package (3)	7T300		D000		72.00	HRS	3,389.04
TT28305CA1	D	LP08E	RPP/CH2M - Health Physicists	2003	Close out Work Package (3)	7T300		D000		72.00	HRS	3,599.28
TT28305CA1	D	LR05B	RPP/CH2M - Nuclear Waste Process Ops	2003	Close out Work Package (3)	7T300		D000		48.00	HRS	2,023.68
TT28305CA1	D	LT05B	RPP/CH2M - Health Physics Techs	2003	Close out Work Package (3)	7T300		D000		48.00	HRS	1,906.08

Cost Estimating Input Sheet

Task Title:	S Farm Transfer System	Revision Number:	b
Sched Act Id:	12.03.13	WBS Number:	A5.02.01.02.07.12.03
Activity Owner:	SST Retrieval	PBS Number:	
Prepared By:	JR Biggs/AREngelman		

7.0 Notes:

1. Consumables such as plastic sheeting, tape, containments, and waste bags are included in this figure. Small tools and PPE are provided by Operations and are excluded from this estimate.

2. All labor hours have been increased by 20% to account for unexpected occurances such as weather and reasource availability, based on Interim Stabilization experience. Hours include pre and post job activity including pre-job briefings and dress/undress as applicable.

3. The crane crew consists of the following personnel and equipment:
Rates are based on the FY01 published site indirect pool rates
1 - Management PIC (Person in Charge) ($130/hr)
1 - Teamster - Heavy Load Truck Driver ($81/hr)
1 - Operator - Crane Operator ($81/hr)
4 - Ironworker/Riggers - Rig pump for lifting, flag crane operator, etc ($324/hr)
1 - 33T Crane/truck/trailer - ($500/day or $55.56/hr.)
Therefore:
The total Crane and Rigging Crew Hourly Rate = $672/hr rounded
Daily rate = 8 hrs X $672 = $5,376

Cost Estimating Input Sheet

Task Title:	SHMS E+ Installation	Revision Number:	b
Sched Act Id:	12.03.14	WBS Number:	A5.02.01.02.07.12.03
Activity Owner:	SST Retrieval	PBS Number:	
Prepared By:	JR Biggs/AREngelman		

1.0 Scope Description:

This activity will remove the Standard Hydrogen Monitoring Sysem (SHMS) at S-112 and install a new analytical SHMS E+. This will be a stand alone activity that will include all phase to complete the total upgrade. The SHMS E+ is a stand alone system used for monitoring of the tank dome head space and is not specialized equipment such as the water or pumping systems used for saltcake dissolution in S-112. They have been routinely installed on tanks throughout tank farms and other than alarm functions and electircal, do not interface with other systems. For this reason, the scope involving the SHMS E+ Upgrade design, installation, and testing are contained in this one estimate. Specific activities includes the following:

A-G. Create hardware design
H-J. Create software design
L. Work package planning
M. Remove existing equipment
O- Perform ATP/OTP testing
P Prepare testing documentation

2.0 Estimating Assumptions and Exclusions:

A- The Safety Assessment and BIO will be updated to wither the different instruments used to obtain tank data, or changed to identify function as opposed to specific instruments.
A - It is not a requirement to have redundant gas chromatographs to support the mixer pump operation.
A- This estimate does not include any operating & maintenance costs associated with the installation of new SHMS.
A-Utilize the spare SHMS

3.0 Basis of Estimate:

Estimates are based on SY-101 experience. Where applicable Lessons Learned and actual costs from field installations have been incorporated in to estimates and planning.

4.0 Estimate Stage and Method:

Preliminary/Analogy

5.0 Legal Drivers/Reference Documents:

Tri-Party Agreement Milestone M-45-03C, "Complete Full Scale Saltcake Waste Retrieval Technology Demonstration at S-112"
DOE Order 413.3, Program and Project Management for the Acquisition of Capital Assets,

RPP-7526, Preliminary Engineering Report for the 241-S-112 Retrieval System

RPP-8791, PRELIMINARY PROJECT EXECUTION PLAN FOR TANK 241-S-112 SALTCAKE WASTE RETRIEVAL TECHNOLOGY DEMONSTRATION

RPP-7825, Single-Shell Tank S-112 Full Scale Saltcake Waste Retrieval technology Demonstration Functions and Requirements

Cost Estimating Input Sheet

Task Title:	SHMS E+ Installation	Revision Number:	b
Sched Act Id:	12.03.14	WBS Number:	A5.02.01.02.07.12.03
Activity Owner:	SST Retrieval	PBS Number:	
Prepared By:	JR Biggs/AREngelman		

P3 Activity	Sub Task	P3 Res Code	ResourceType	Fiscal Year	SubtaskDescription	Org Code	Seq Num	COA	Note Ref	Budget Qty	Qty Type	Total Qty
TT28305CA1	A	98L	RPP/CH2M Cogema	2003	Prepare ABU 88 hr @ $90/hr	7T300		D000		7.90	$K	7,900.00
TT28305CA1	A	LE01E	RPP/CH2M - Chemical Engineers	2003	Review & Approve ABU	7T300		D000		5.00	HRS	283.40
TT28305CA1	A	LE11E	RPP/CH2M - Quality Control Engrs	2003	Review & Approve ABU	7T300		D000		5.00	HRS	255.60
TT28305CA1	A	LE12E	RPP/CH2M - Safety Engineers	2003	Review & Approve ABU	7T300		D000		5.00	HRS	244.75
TT28305CA1	A	LE13E	RPP/CH2M - Other Engineers	2003	Prepare ABU	7T300		D000		40.00	HRS	2,483.60
TT28305CA1	A	LM03E	RPP/CH2M - Project & Program Mgrs	2003	Review & Approve ABU	7T300		D000		5.00	HRS	344.75
TT28305CA1	C	LE01E	RPP/CH2M - Chemical Engineers	2003	Review & approve the FRD	7T300		D000		4.00	HRS	226.72
TT28305CA1	C	LE11E	RPP/CH2M - Quality Control Engrs	2003	Review & approve the FRD	7T300		D000		4.00	HRS	204.48
TT28305CA1	C	LE12E	RPP/CH2M - Safety Engineers	2003	Review & approve the FRD	7T300		D000		4.00	HRS	195.80
TT28305CA1	C	LE13E	RPP/CH2M - Other Engineers	2003	Review & rewrite the FRD	7T300		D000		80.00	HRS	4,967.20
TT28305CA1	C	LM03E	RPP/CH2M - Project & Program Mgrs	2003	Review & approve the FRD	7T300		D000		4.00	HRS	275.80
TT28305CA1	D	LE01E	RPP/CH2M - Chemical Engineers	2003	Review/Approve - SDD	7T300		D000		4.00	HRS	226.72
TT28305CA1	D	LE11E	RPP/CH2M - Quality Control Engrs	2003	Review/Approve - SDD	7T300		D000		4.00	HRS	204.48
TT28305CA1	D	LE12E	RPP/CH2M - Safety Engineers	2003	Review/Approve - SDD	7T300		D000		4.00	HRS	195.80
TT28305CA1	D	LE13E	RPP/CH2M - Other Engineers	2003	Rework the SDD	7T300		D000		80.00	HRS	4,967.20
TT28305CA1	D	LM03E	RPP/CH2M - Project & Program Mgrs	2003	Review/Approve - SDD	7T300		D000		4.00	HRS	275.80
TT28305CA1	E	LE01E	RPP/CH2M - Chemical Engineers	2003	Review/Approve the MOU & CVI documents	7T300		D000		4.00	HRS	226.72
TT28305CA1	E	LE10E	RPP/CH2M - Plant Engineers	2003	Review/Approve the MOU & CVI documents	7T300		D000		8.00	HRS	334.40
TT28305CA1	E	LE11E	RPP/CH2M - Quality Control Engrs	2003	Review/Approve the MOU & CVI documents	7T300		D000		2.00	HRS	102.24
TT28305CA1	E	LE12E	RPP/CH2M - Safety Engineers	2003	Review/Approve the MOU & CVI documents	7T300		D000		2.00	HRS	97.90
TT28305CA1	E	LE13E	RPP/CH2M - Other Engineers	2003	Rework the MOU & CVI documents	7T300		D000		40.00	HRS	2,483.60
TT28305CA1	E	LM03E	RPP/CH2M - Project & Program Mgrs	2003	Review/Approve the MOU & CVI documents	7T300		D000		4.00	HRS	275.80
TT28305CA1	G	98L	RPP/CH2M Cogema	2003	Update the SHMS drawings 330hr @ $90/hr	7T300		D000		29.70	$K	29,700.00
TT28305CA1	G	LE01E	RPP/CH2M - Chemical Engineers	2003	Review/Approve the SHMS drawings	7T300		D000		24.00	HRS	1,360.32
TT28305CA1	G	LE11E	RPP/CH2M - Quality Control Engrs	2003	Review/Approve the SHMS drawings	7T300		D000		16.00	HRS	817.92
TT28305CA1	G	LE12E	RPP/CH2M - Safety Engineers	2003	Review/Approve the SHMS drawings	7T300		D000		16.00	HRS	783.20

Cost Estimating Input Sheet

Task Title:	SHMS E+ Installation	Revision Number:	b
Sched Act Id:	12.03.14	WBS Number:	A5.02.01.02.07.12.03
Activity Owner:	SST Retrieval	PBS Number:	
Prepared By:	JR Biggs/AREngelman		

P3 Activity	Sub Task	P3 Res Code	ResourceType	Fiscal Year	SubtaskDescription	Org Code	Seq Num	COA	Note Ref	Budget Qty	Qty Type	Total Qty
TT28305CA1	G	LE13E	RPP/CH2M - Other Engineers	2003	Update the SHMS drawings	7T300		D000		100.00	HRS	6,209.00
TT28305CA1	G	LM03E	RPP/CH2M - Project & Program Mgrs	2003	Review/Approve the SHMS drawings	7T300		D000		12.00	HRS	827.40
TT28305CA1	H	98L	RPP/CH2M Cogema	2003	Create the communications software for SHMS-E to DACs & DACS to	7T300		D000		12.20	$K	12,200.00
TT28305CA1	I	98L	RPP/CH2M Cogema	2003	Rework CSWD 30 hr @ $90/hr	7T300		D000		2.70	$K	2,700.00
TT28305CA1	I	LE01E	RPP/CH2M - Chemical Engineers	2003	Review/Approve CSWD	7T300		D000		4.00	HRS	226.72
TT28305CA1	I	LE11E	RPP/CH2M - Quality Control Engrs	2003	Review/Approve CSWD	7T300		D000		4.00	HRS	204.48
TT28305CA1	I	LE12E	RPP/CH2M - Safety Engineers	2003	Review/Approve CSWD	7T300		D000		4.00	HRS	195.80
TT28305CA1	I	LM03E	RPP/CH2M - Project & Program Mgrs	2003	Review/Approve CSWD	7T300		D000		4.00	HRS	275.80
TT28305CA1	J	98L	RPP/CH2M Cogema	2003	Prepare ATP/OTP 135 hr @ $90/hr	7T300		D000		12.20	$K	12,200.00
TT28305CA1	J	LE01E	RPP/CH2M - Chemical Engineers	2003	Review/Approve ATP/OTP documents	7T300		D000		8.00	HRS	453.44
TT28305CA1	J	LE10E	RPP/CH2M - Plant Engineers	2003	Review/Approve ATP/OTP documents	7T300		D000		8.00	HRS	334.40
TT28305CA1	J	LE11E	RPP/CH2M - Quality Control Engrs	2003	Review/Approve ATP/OTP documents	7T300		D000		8.00	HRS	408.96
TT28305CA1	J	LE12E	RPP/CH2M - Safety Engineers	2003	Review/Approve ATP/OTP documents	7T300		D000		8.00	HRS	391.60
TT28305CA1	J	LM03E	RPP/CH2M - Project & Program Mgrs	2003	Review/Approve ATP/OTP documents	7T300		D000		8.00	HRS	551.60
TT28305CA1	L	LC02B	RPP/CH2M - Electricians	2003	Work Package	7T300		D000		12.00	HRS	504.72
TT28305CA1	L	LC08B	RPP/CH2M - Plumbers & Pipefitters	2003	Work Package	7T300		D000		12.00	HRS	474.24
TT28305CA1	L	LE01E	RPP/CH2M - Chemical Engineers	2003	Work Package	7T300		D000		16.00	HRS	906.88
TT28305CA1	L	LE10E	RPP/CH2M - Plant Engineers	2003	Work Package	7T300		D000		8.00	HRS	334.40
TT28305CA1	L	LE11E	RPP/CH2M - Quality Control Engrs	2003	Work Package	7T300		D000		4.00	HRS	204.48
TT28305CA1	L	LE12E	RPP/CH2M - Safety Engineers	2003	Work Package	7T300		D000		4.00	HRS	195.80
TT28305CA1	L	LE13E	RPP/CH2M - Other Engineers	2003	Work Package	7T300		D000		16.00	HRS	993.44
TT28305CA1	L	LM03E	RPP/CH2M - Project & Program Mgrs	2003	Work Package	7T300		D000		4.00	HRS	275.80
TT28305CA1	L	LP07E	RPP/CH2M - Planner/Sched/Estimators	2003	Work Package	7T300		D000		160.00	HRS	6,944.00
TT28305CA1	M	10L	RPP/CH2M Material & Equipment	2003	Consummables	7T300		D000		5.00	$K	5,000.00
TT28305CA1	M	3PL	RPP/CH2M PHMC Support to RPP	2003	Remove equipment crane 1 day	7T300		D000		5.40	$K	5,400.00
TT28305CA1	M	LC02B	RPP/CH2M - Electricians	2003	Remove equipment	7T300		D000		240.00	HRS	10,094.40

Cost Estimating Input Sheet

Task Title:	SHMS E+ Installation
Sched Act Id:	12.03.14
Activity Owner:	SST Retrieval
Prepared By:	JR Biggs/AREngelman
Revision Number:	b
WBS Number:	A5.02.01.02.07.12.03
PBS Number:	

P3 Activity	Sub Task	P3 Res Code	ResourceType	Fiscal Year	SubtaskDescription	Org Code	Seq Num	COA	Note Ref	Budget Qty	Qty Type	Total Qty
TT28305CA1	M	LC08B	RPP/CH2M - Plumbers & Pipefitters	2003	Remove equipment	7T300		D000		240.00	HRS	9,484.80
TT28305CA1	M	LE13E	RPP/CH2M - Other Engineers	2003	Remove equipment	7T300		D000		60.00	HRS	3,725.40
TT28305CA1	M	LM01E	RPP/CH2M - First Line Supervisors	2003	Remove equipment	7T300		D000		120.00	HRS	5,648.40
TT28305CA1	M	LP08E	RPP/CH2M - Health Physicists	2003	Remove equipment	7T300		D000		60.00	HRS	2,999.40
TT28305CA1	M	LP09E	RPP/CH2M - In Hygienists	2003	Remove equipment	7T300		D000		16.00	HRS	746.08
TT28305CA1	N	3PL	RPP/CH2M PHMC Support to RPP	2003	Hardware installation came 1 day	7T300		D000	A	5.40	$K	5,400.00
TT28305CA1	N	LC02B	RPP/CH2M - Electricians	2003	Hardware installation	7T300		D000		240.00	HRS	10,094.40
TT28305CA1	N	LC08B	RPP/CH2M - Plumbers & Pipefitters	2003	Hardware installation	7T300		D000		240.00	HRS	9,484.80
TT28305CA1	N	LE13E	RPP/CH2M - Other Engineers	2003	Hardware installation	7T300		D000		180.00	HRS	11,176.20
TT28305CA1	N	LM01E	RPP/CH2M - First Line Supervisors	2003	Hardware installation	7T300		D000		120.00	HRS	5,648.40
TT28305CA1	N	LP08E	RPP/CH2M - Health Physicists	2003	Hardware installation	7T300		D000		60.00	HRS	2,999.40
TT28305CA1	N	LP09E	RPP/CH2M - In Hygienists	2003	Hardware installation	7T300		D000		16.00	HRS	746.08
TT28305CA1	O	LC02B	RPP/CH2M - Electricians	2003	Perform ATP/OTP testing	7T300		D000		40.00	HRS	1,682.40
TT28305CA1	O	LC08B	RPP/CH2M - Plumbers & Pipefitters	2003	Perform ATP/OTP testing	7T300		D000		40.00	HRS	1,580.80
TT28305CA1	O	LE01E	RPP/CH2M - Chemical Engineers	2003	Perform ATP/OTP testing	7T300		D000		8.00	HRS	453.44
TT28305CA1	O	LE11E	RPP/CH2M - Quality Control Engrs	2003	Perform ATP/OTP testing	7T300		D000		20.00	HRS	1,022.40
TT28305CA1	O	LE13E	RPP/CH2M - Other Engineers	2003	Perform ATP/OTP testing	7T300		D000		20.00	HRS	1,241.80
TT28305CA1	O	LM01E	RPP/CH2M - First Line Supervisors	2003	Perform ATP/OTP testing	7T300		D000		40.00	HRS	1,882.80
TT28305CA1	O	LR05B	RPP/CH2M - Nuclear Waste Process Ops	2003	Perform ATP/OTP testing	7T300		D000		20.00	HRS	843.20
TT28305CA1	O	LT05B	RPP/CH2M - Health Physics Techs	2003	Perform ATP/OTP testing	7T300		D000		12.00	HRS	476.52
TT28305CA1	P	98L	RPP/CH2M Cogema	2003	Prepare Testing Documentation 30 hr @ $90/hr	7T300		D000		2.70	$K	2,700.00
TT28305CA1	P	LE01E	RPP/CH2M - Chemical Engineers	2003	Review/Approve Testing Documentation	7T300		D000		4.00	HRS	226.72
TT28305CA1	P	LE10E	RPP/CH2M - Plant Engineers	2003	Review/Approve Testing Documentation	7T300		D000		2.00	HRS	83.60
TT28305CA1	P	LE11E	RPP/CH2M - Quality Control Engrs	2003	Review/Approve Testing Documentation	7T300		D000		2.00	HRS	102.24
TT28305CA1	P	LE12E	RPP/CH2M - Safety Engineers	2003	Review/Approve Testing Documentation	7T300		D000		2.00	HRS	97.90
TT28305CA1	P	LE13E	RPP/CH2M - Other Engineers	2003	Prepare Testing Documentation	7T300		D000		24.00	HRS	1,490.16

Cost Estimating Input Sheet

Task Title:	SHMS E+ Installation
Sched Act Id:	12.03.14
Activity Owner:	SST Retrieval
Prepared By:	JR Biggs/AREngelman

Revision Number:	b
WBS Number:	A5.02.01.02.07.12.03
PBS Number:	

P3 Activity	Sub Task	P3 Res Code	ResourceType	Fiscal Year	SubtaskDescription	Org Code	Seq Num	COA	Note Ref	Budget Qty	Qty Type	Total Qty
TT28305CA1	P	LM03E	RPP/CH2M - Project & Program Mgrs	2003	Review/Approve Testing Documentation	7T300		D000		2.00	HRS	137.90

Cost Estimating Input Sheet

Task Title:	SHMS E+ Installation	Revision Number:	b
Sched Act Id:	12.03.14	WBS Number:	A5.02.01.02.07.12.03
Activity Owner:	SST Retrieval	PBS Number:	
Prepared By:	JR Biggs/AREngelman		

7.0 Notes:

A. The crane crew consists of the following personnel and equipment:
Rates are based on the FY01 published site indirect pool rates
1 - Management PIC (Person in Charge) ($130/hr)
1 - Teamster - Heavy Load Truck Driver ($81/hr)
1 - Operator - Crane Operator ($81/hr)
4 - Ironworker/Riggers - Rig pump for lifting, flag crane operator, etc ($324/hr)
1 - 33T Crane/truck/trailer - ($500/day or $55.56/hr.)
Therefore:
The total Crane and Rigging Crew Hourly Rate = $672/hr rounded
Daily rate = 8 hrs X $672 = $5,376

Cost Estimating Input Sheet

Task Title:	Construction Mgmt.	Revision Number:	b
Sched Act Id:	12.03.15	WBS Number:	A5.02.01.02.07.12.03
Activity Owner:	SST Retrieval	PBS Number:	
Prepared By:	JR Biggs/AREngelman		

1.0 Scope Description:

This task provides engineering support during procurement, fabrication, and construction activities

2.0 Estimating Assumptions and Exclusions:

A - The technical support required to support construction is similar to that required for the SY-101 Level Rise Remediation System.

3.0 Basis of Estimate:

A - Engineering support - This engineering will provide support during equipment and systems procurement, fabrication, and construction.

B.PNNL LDMM Support 1.5 FTE for 12 mos. (FY03)

4.0 Estimate Stage and Method:

Preliminary/Analogy

5.0 Legal Drivers/Reference Documents:

Tri-Party Agreement Milestone M-45-03C, "Complete Full Scale Saltcake Waste Retrieval Technology Demonstration at S-112"
DOE Order 413.3, Program and Project Management for the Acquisition of Capital Assets,

RPP-7526, Preliminary Engineering Report for the 241-S-112 Retrieval System

RPP-8791, PRELIMINARY PROJECT EXECUTION PLAN FOR TANK 241-S-112 SALTCAKE WASTE RETRIEVAL TECHNOLOGY DEMONSTRATION

RPP-7825, Single-Shell Tank S-112 Full Scale Saltcake Waste Retrieval technology Demonstration Functions and Requirements

Cost Estimating Input Sheet

Task Title:	Construction Mgmt.	Revision Number:	b
Sched Act Id:	12.03.15	WBS Number:	A5.02.01.02.07.12.03
Activity Owner:	SST Retrieval	PBS Number:	
Prepared By:	JR Biggs/AREngelman		

P3 Activity	Sub Task	P3 Res Code	ResourceType	Fiscal Year	SubtaskDescription	Org Code	Seq Num	COA	Note Ref	Budget Qty	Qty Type	Total Qty
TT28305CA1	A	21L	RPP/CH2M PO Contracts	2003	Process Control/PNNL engineering interface/ 1FTE 12 mo@ 151hr/mo @	7P300		B000		163.10	$K	163,100.00
TT28305CA1	A	98L	RPP/CH2M Cogema	2003	Operations Design Integration (1 FTE - 12 mo @ 151hr/mo @$100/hr)	7P300		B000		181.20	$K	181,200.00
TT28305CA1	A	98L	RPP/CH2M Cogema	2003	Project Engmg. (1FTE for 12 mos @ 151hr/mo @ $112/hr) (.5FTE for	7P300		B000		290.50	$K	290,500.00
TT28305CA1	A	98L	RPP/CH2M Cogema	2003	Engr support- -2FTE -6 mo @ 151hr/mo/ea @ $90/hr	7P300		B000		163.10	$K	163,100.00
TT28305CA1	B	3DL	RPP/CH2M Other Hanford Contractors	2003	PNNL Support - LDMM System (1.5FTE @ $110/hr)	7P300		B000		298.30	$K	298,300.00

Cost Estimating Input Sheet

Task Title:	Construction Mgmt.	Revision Number:	b
Sched Act Id:	12.03.15	WBS Number:	A5.02.01.02.07.12.03
Activity Owner:	SST Retrieval	PBS Number:	
Prepared By:	JR Biggs/AREngelman		

7.0 Notes:

Activity Information - Detail

5.02.01.02.0 S-112 Testing

Summary

Activity ID	Activity Title	Cost
12.04.01	Testing Support Planning	$19,381.96
12.04.02	Procedure Development/Training/ATP(Cold Test)/OTP	$2,174,828.07

Summary for 'TBR' = 5.02.01.02.07.12.04 (2 detail records)

Sum *$2,194,210.03*

Cost Estimating Input Sheet

Task Title:	Testing Support Planning	Revision Number:	b
Sched Act Id:	12.04.01	WBS Number:	A5.02.01.02.07.12.04
Activity Owner:	SST Retrieval	PBS Number:	
Prepared By:	JR Biggs/AREngelman		

1.0 Scope Description:

The scope of this planning activity consists of the preparation of several Work Packages for the following:

H) Operation Test Procedure Package
I) Cold Testing of System Components
J) System Operating Package/Test Plan

The Process for Work Package preparation will be in accordance with HNF-IP-0842, Volume 5, section 7.1.

Work Packages are prepared to outline the specific work steps required to assure successful execution of the work within the boundaries of the applicable requirements. The work package preparation process includes:

- A walkdown of the facility/area will be performed to identify the physical condition of the work area.
- Identification of detailed work steps, including Quality Control inspection points and Radiological hold points.
- Identification of re-test requirements.
- Identification of requirements, development of minor field work permits and establishment of energy control barriers.
- Obtain management and oversight review and approval.

Note: In the course of planning this work administrative activities will be performed wherein existing drawings and Engineering Change Notices (ECNs) will be pulled and inspected for previous Tank Farm / equipment modifications. Management review and approval must be obtained before proceeding with the work in the Tank Farm. Whenever practical lessons learned from similar activities will be applied.

Note: Planning will also identify the closeout package content which can include generation of updated drawings and ECNs to reflect the change in equipment configuration. This work scope includes only the identification of the ECN(s).

2.0 Estimating Assumptions and Exclusions:

A - Work planning procedures will remain essentially the same throughout the life of the project.
A - Current standard practices for rad con and industrial health & safety remains unchanged.
A - This work will be performed on a 5 - day calendar and no special overtime is included in the work.
A - The resources allocated for this activity have been adjusted to accommodate the above average interface requirements.

3.0 Basis of Estimate:

A significant number of work packages are prepared each year in the tank farm organization. The institutional memory of how to prepare these documents is what forms the basis for this estimate. Copies of Work Package planning documents can be found in the JCS system. Where applicable Lessons Learned and actual costs from other field activities have been used for estimates and planning.

4.0 Estimate Stage and Method:

Preliminary/Analogy

Cost Estimating Input Sheet

Task Title:	Testing Support Planning	Revision Number:	b
Sched Act Id:	12.04.01	WBS Number:	A5.02.01.02.07.12.04
Activity Owner:	SST Retrieval	PBS Number:	
Prepared By:	JR Biggs/AREngelman		

5.0 Legal Drivers/Reference Documents:

Tri-Party Agreement Milestone M-45-03C, "Complete Full Scale Saltcake Waste Retrieval Technology Demonstration at S-112"
DOE Order 413.3, Program and Project Management for the Acquisition of Capital Assets,

RPP-7526, Preliminary Engineering Report for the 241-S-112 Retrieval System

RPP-8791, PRELIMINARY PROJECT EXECUTION PLAN FOR TANK 241-S-112 SALTCAKE WASTE RETRIEVAL TECHNOLOGY DEMONSTRATION

RPP-7825, Single-Shell Tank S-112 Full Scale Saltcake Waste Retrieval technology Demonstration Functions and Requirements

Cost Estimating Input Sheet

Task Title:	Testing Support Planning
Sched Act Id:	12.04.01
Activity Owner:	SST Retrieval
Prepared By:	JR Biggs/AREngelman
Revision Number:	b
WBS Number:	A5.02.01.02.07.12.04
PBS Number:	

P3 Activity	Sub Task	P3 Res Code	ResourceType	Fiscal Year	SubtaskDescription	Org Code	Seq Num	COA	Note Ref	Budget Qty	Qty Type	Total Qty
TT28305CA1	H	98L	RPP/CH2M Cogema	2004	Work Package Planning and EWP review (OTP) -COGEMA 40 hr @	7T300		D000		3.30	$K	3,300.00
TT28305CA1	H	LC02B	RPP/CH2M - Electricians	2004	Work Package Planning and EWP review (OTP)	7T300		D000		4.00	HRS	168.24
TT28305CA1	H	LC08B	RPP/CH2M - Plumbers & Pipefitters	2004	Work Package Planning and EWP review (OTP)	7T300		D000		4.00	HRS	158.08
TT28305CA1	H	LE05E	RPP/CH2M - Environmental Engineers	2004	Work Package Planning and EWP review (OTP)	7T300		D000		4.00	HRS	195.28
TT28305CA1	H	LE11E	RPP/CH2M - Quality Control Engrs	2004	Work Package Planning and EWP review (OTP)	7T300		D000		4.00	HRS	204.48
TT28305CA1	H	LE12E	RPP/CH2M - Safety Engineers	2004	Work Package Planning and EWP review (OTP)	7T300		D000		4.00	HRS	195.80
TT28305CA1	H	LE13E	RPP/CH2M - Other Engineers	2004	Work Package Planning and EWP review (OTP)	7T300		D000		12.00	HRS	745.08
TT28305CA1	H	LG03B	RPP/CH2M - Office Clks(Specialized)	2004	Work Package Planning and EWP review (OTP)	7T300		D000		4.00	HRS	133.36
TT28305CA1	H	LM01E	RPP/CH2M - First Line Supervisors	2004	Work Package Planning and EWP review (OTP)	7T300		D000		4.00	HRS	188.28
TT28305CA1	H	LM02E	RPP/CH2M - Managers & Executives	2004	Work Package Planning and EWP review (OTP)	7T300		D000		4.00	HRS	275.96
TT28305CA1	H	LP08E	RPP/CH2M - Health Physicists	2004	Work Package Planning and EWP review (OTP)	7T300		D000		4.00	HRS	199.96
TT28305CA1	H	LR05B	RPP/CH2M - Nuclear Waste Process Ops	2004	Work Package Planning and EWP review (OTP)	7T300		D000		8.00	HRS	337.28
TT28305CA1	H	LT05B	RPP/CH2M - Health Physics Techs	2004	Work Package Planning and EWP review (OTP)	7T300		D000		8.00	HRS	317.68
TT28305CA1	H	LT06B	RPP/CH2M - In Health/Safety Tech	2004	Work Package Planning and EWP review (OTP)	7T300		D000		4.00	HRS	159.40
TT28305CA1	I	98L	RPP/CH2M Cogema	2004	Work Package Planning and EWP review (MockUp) -COGEMA 40hr @	7T300		D000		3.30	$K	3,300.00
TT28305CA1	I	LC02B	RPP/CH2M - Electricians	2004	Work Package Planning and EWP review (MockUp)	7T300		D000		4.00	HRS	168.24
TT28305CA1	I	LC08B	RPP/CH2M - Plumbers & Pipefitters	2004	Work Package Planning and EWP review (MockUp)	7T300		D000		4.00	HRS	158.08
TT28305CA1	I	LE05E	RPP/CH2M - Environmental Engineers	2004	Work Package Planning and EWP review (MockUp)	7T300		D000		4.00	HRS	195.28
TT28305CA1	I	LE11E	RPP/CH2M - Quality Control Engrs	2004	Work Package Planning and EWP review (MockUp)	7T300		D000		4.00	HRS	204.48
TT28305CA1	I	LE12E	RPP/CH2M - Safety Engineers	2004	Work Package Planning and EWP review (MockUp)	7T300		D000		4.00	HRS	195.80
TT28305CA1	I	LE13E	RPP/CH2M - Other Engineers	2004	Work Package Planning and EWP review (MockUp)	7T300		D000		12.00	HRS	745.08
TT28305CA1	I	LG03B	RPP/CH2M - Office Clks(Specialized)	2004	Work Package Planning and EWP review (MockUp)	7T300		D000		4.00	HRS	133.36
TT28305CA1	I	LM01E	RPP/CH2M - First Line Supervisors	2004	Work Package Planning and EWP review (MockUp)	7T300		D000		4.00	HRS	188.28
TT28305CA1	I	LM02E	RPP/CH2M - Managers & Executives	2004	Work Package Planning and EWP review (MockUp)	7T300		D000		4.00	HRS	275.96
TT28305CA1	I	LP08E	RPP/CH2M - Health Physicists	2004	Work Package Planning and EWP review (MockUp)	7T300		D000		4.00	HRS	199.96
TT28305CA1	I	LR05B	RPP/CH2M - Nuclear Waste Process Ops	2004	Work Package Planning and EWP review (MockUp)	7T300		D000		8.00	HRS	337.28

Cost Estimating Input Sheet

Task Title:	Testing Support Planning	Revision Number:	b
Sched Act Id:	12.04.01	WBS Number:	A5.02.01.02.07.12.04
Activity Owner:	SST Retrieval	PBS Number:	
Prepared By:	JR Biggs/AREngelman		

P3 Activity	Sub Task	P3 Res Code	ResourceType	Fiscal Year	SubtaskDescription	Org Code	Seq Num	COA	Note Ref	Budget Qty	Qty Type	Total Qty
TT28305CA1	I	LT05B	RPP/CH2M - Health Physics Techs	2004	Work Package Planning and EWP review (MockUp)	7T300		D000		8.00	HRS	317.68
TT28305CA1	I	LT06B	RPP/CH2M - In Health/Safety Tech	2004	Work Package Planning and EWP review (MockUp)	7T300		D000		4.00	HRS	159.40
TT28305CA1	J	98L	RPP/CH2M Cogema	2004	Work Package Planning and EWP review (System Operation) -Planner	7T300		D000		3.30	$K	3,300.00
TT28305CA1	J	LC02B	RPP/CH2M - Electricians	2004	Work Package Planning and EWP review (System Operation)	7T300		D000		4.00	HRS	168.24
TT28305CA1	J	LC08B	RPP/CH2M - Plumbers & Pipefitters	2004	Work Package Planning and EWP review (System Operation)	7T300		D000		4.00	HRS	158.08
TT28305CA1	J	LE11E	RPP/CH2M - Quality Control Engrs	2004	Work Package Planning and EWP review (System Operation)	7T300		D000		4.00	HRS	204.48
TT28305CA1	J	LE12E	RPP/CH2M - Safety Engineers	2004	Work Package Planning and EWP review (System Operation)	7T300		D000		4.00	HRS	195.80
TT28305CA1	J	LE13E	RPP/CH2M - Other Engineers	2004	Work Package Planning and EWP review (System Operation)	7T300		D000		12.00	HRS	745.08
TT28305CA1	J	LG03B	RPP/CH2M - Office Clks(Specialized)	2004	Work Package Planning and EWP review (System Operation)	7T300		D000		4.00	HRS	133.36
TT28305CA1	J	LM01E	RPP/CH2M - First Line Supervisors	2004	Work Package Planning and EWP review (System Operation)	7T300		D000		4.00	HRS	188.28
TT28305CA1	J	LM02E	RPP/CH2M - Managers & Executives	2004	Work Package Planning and EWP review (System Operation)	7T300		D000		4.00	HRS	275.96
TT28305CA1	J	LP08E	RPP/CH2M - Health Physicists	2004	Work Package Planning and EWP review (System Operation)	7T300		D000		4.00	HRS	199.96
TT28305CA1	J	LR05B	RPP/CH2M - Nuclear Waste Process Ops	2004	Work Package Planning and EWP review (System Operation)	7T300		D000		8.00	HRS	337.28
TT28305CA1	J	LT05B	RPP/CH2M - Health Physics Techs	2004	Work Package Planning and EWP review (System Operation)	7T300		D000		8.00	HRS	317.68

Cost Estimating Input Sheet

Task Title:	Testing Support Planning	Revision Number:	b
Sched Act Id:	12.04.01	WBS Number:	A5.02.01.02.07.12.04
Activity Owner:	SST Retrieval	PBS Number:	
Prepared By:	JR Biggs/AREngelman		

7.0 Notes:

Cost Estimating Input Sheet

Task Title:	Procedure Development/Training/ATP(Cold Test)/OTP	Revision Number:	b
Sched Act Id:	12.04.02	WBS Number:	A5.02.01.02.07.12.04
Activity Owner:	SST Retrieval	PBS Number:	
Prepared By:	JR Biggs/AREngelman		

1.0 Scope Description:

Develop Procedures:

To support the S-112 Retrieval activities Operations, Alarm and Maintenance procedures must be developed. These subtasks will process the procedures and include drafting the procedures, reviews, validations and approvals. It is estimated that the following will be required:

A)Four Operating procedures (Dissolution;Water Skid;Chemical Skid;Solids Removal)
B)Two Alarm Response procedures
C)Ten Maintenance/Calibration procedures will be required.

System Testing SubTasks:

D) Will include "Cold Testing" as part of the ATP prior to installation. This mockup will test the system and use the same procedures that the actual field operation will use and includes pre-job and post job debriefings and Senior Management oversight. Major activities are:
- Staging of equipment and personnel at the farm or a suitable area (Cold Test).
- Detailed Pre-job briefing for all personnel and alternates involved in the removal of the pump. (4 hours)
- Completion of the ATP (Assume 4 days prep and 10 days for ATP).
- Operator Training (Assume 5 days)

E) OTP prior to operation. (Assume 10 days plus 4 hrs pre-job)

F) Tank Characterization

G) Engineering Support

H) PNNL Support

2.0 Estimating Assumptions and Exclusions:

A - Current standard practices for rad con and industrial heatlth & safety remains unchanged
A - All work will be accomplished by personnel who are familiar with AW Farm systems and equipment.
A - A COG Engineer dedicated to the installation will be provided.
A - Pit entries will be required.
A - Major events such as: radiation release, exhauster shut down or ammonia gas release are not anticipated.
A- Tank Characterization is based on 2 DQOs - the S-112 retrieval and the RPE DQOs. The RPE DQO estimate is excluded here. It is included in the Retrieval & Disposal Program Office budget.

3.0 Basis of Estimate:

Estimates are based on historical experience for past tank farm work for these activities.

F. Tank Characterization - estimate provided by 222-S Laboratory Client Services dated 11/01/01

G. Engineering support
G1 - Engineering support - This engineering supports testing operations and testing documentation preparation, review, and approval.
G2 - Process Engineering support: .5 FTE for 12 mos.
Support (lab) testing task plan development and preparation, oversight of (lab) testing, ATP, OTPs , review of sampling and analysis data, and provide consulting support

H PNNL support
H1- PNNL LDMM engineering support - 1.5 FTE (FY04)
H2- Testing Support: Participate in process control decisions - 1 FTE (FY04)

4.0 Estimate Stage and Method:

Preliminary/Analogy

Cost Estimating Input Sheet

Task Title:	Procedure Development/Training/ATP(Cold Test)/OTP	Revision Number:	b
Sched Act Id:	12.04.02	WBS Number:	A5.02.01.02.07.12.04
Activity Owner:	SST Retrieval	PBS Number:	
Prepared By:	JR Biggs/AREngelman		

5.0 Legal Drivers/Reference Documents:

Tri-Party Agreement Milestone M-45-03C, "Complete Full Scale Saltcake Waste Retrieval Technology Demonstration at S-112"
DOE Order 413.3, Program and Project Management for the Acquisition of Capital Assets,

RPP-7526, Preliminary Engineering Report for the 241-S-112 Retrieval System

RPP-8791, PRELIMINARY PROJECT EXECUTION PLAN FOR TANK 241-S-112 SALTCAKE WASTE RETRIEVAL TECHNOLOGY DEMONSTRATION

RPP-7825, Single-Shell Tank S-112 Full Scale Saltcake Waste Retrieval technology Demonstration Functions and Requirements

Cost Estimating Input Sheet

Task Title:	Procedure Development/Training/ATP(Cold Test)/OTP	Revision Number:	b
Sched Act Id:	12.04.02	WBS Number:	A5.02.01.02.07.12.04
Activity Owner:	SST Retrieval	PBS Number:	
Prepared By:	JR Biggs/AREngelman		

P3 Activity	Sub Task	P3 Res Code	ResourceType	Fiscal Year	SubtaskDescription	Org Code	Seq Num	COA	Note Ref	Budget Qty	Qty Type	Total Qty
TT28305CA3	A	LE05E	RPP/CH2M - Environmental Engineers	2004	Review and approve procedures - Environ Engr(4 proc.@ 10/hr each)	7T300		DM00		40.00	HRS	1,952.80
TT28305CA3	A	LE08E	RPP/CH2M - Nuclear Engineers	2004	Review and approve procedures - Nuclear Safety(4 proc.@ 10/hr each)	7T300		DM00		40.00	HRS	2,548.80
TT28305CA3	A	LE11E	RPP/CH2M - Quality Control Engrs	2004	Review and approve procedures - QA Engr(4 proc.@ 10/hr each)	7T300		DM00		40.00	HRS	2,044.80
TT28305CA3	A	LE12E	RPP/CH2M - Safety Engineers	2004	Review and approve procedures - Industrial Safety(4 proc.@ 10/hr each)	7T300		DM00		40.00	HRS	1,958.00
TT28305CA3	A	LE13E	RPP/CH2M - Other Engineers	2004	Draft procedure change & perform USQs - Cog Engr (4 proc.@ 80/hr	7T300		DM00		320.00	HRS	19,868.80
TT28305CA3	A	LE13E	RPP/CH2M - Other Engineers	2004	Resolve comments, review and approve procedures - COG Engr (4	7T300		DM00		80.00	HRS	4,967.20
TT28305CA3	A	LG02N	RPP/CH2M - Office Clks(General)	2004	Track and issue procedures - Clerk(4proc.@ 10/hr each)	7T300		DM00		40.00	HRS	847.20
TT28305CA3	A	LM01E	RPP/CH2M - First Line Supervisors	2004	Review and approve procedure - Shift Mgr(4 proc.@ 10/hr each)	7T300		DM00		40.00	HRS	1,882.80
TT28305CA3	A	LP08E	RPP/CH2M - Health Physicists	2004	Review and approve procedures - Radcon Engr(4 proc.@ 10/hr each)	7T300		DM00		40.00	HRS	1,999.60
TT28305CA3	A	LP16E	RPP/CH2M - Technical Writers/Editors	2004	Resolve Comments - incorporate comments - Proc Writer 4 proc.@ 20/hr	7T300		DM00		80.00	HRS	3,371.20
TT28305CA3	A	LP16E	RPP/CH2M - Technical Writers/Editors	2004	Format procedure change - Proc Writer(4 proc.@ 50/hr each)	7T300		DM00		200.00	HRS	8,428.00
TT28305CA3	A	LR05B	RPP/CH2M - Nuclear Waste Process Ops	2004	Review, validate and approve procedure - Operator(4 proc.@ 40/hr	7T300		DM00		160.00	HRS	6,745.60
TT28305CA3	B	LE05E	RPP/CH2M - Environmental Engineers	2004	Review and approve procedures - Environ Engr (2)	7T300		DM00		20.00	HRS	976.40
TT28305CA3	B	LE08E	RPP/CH2M - Nuclear Engineers	2004	Review and approve procedures - Nuclear Safety (2)	7T300		DM00		20.00	HRS	1,274.40
TT28305CA3	B	LE11E	RPP/CH2M - Quality Control Engrs	2004	Review and approve procedures - QA Engr (2)	7T300		DM00		20.00	HRS	1,022.40
TT28305CA3	B	LE12E	RPP/CH2M - Safety Engineers	2004	Review and approve procedures - Industrial Safety (2)	7T300		DM00		20.00	HRS	979.00
TT28305CA3	B	LE13E	RPP/CH2M - Other Engineers	2004	Draft procedure change & perform USQs - Cog Engr (2)	7T300		DM00		160.00	HRS	9,934.40
TT28305CA3	B	LE13E	RPP/CH2M - Other Engineers	2004	Resolve comments, review and approve procedures - COG Engr(2)	7T300		DM00		40.00	HRS	2,483.60
TT28305CA3	B	LG02N	RPP/CH2M - Office Clks(General)	2004	Track and issue procedures - Clerk (2)	7T300		DM00		20.00	HRS	423.60
TT28305CA3	B	LM01E	RPP/CH2M - First Line Supervisors	2004	Review and approve procedure - Shift Mgr (2)	7T300		DM00		20.00	HRS	941.40
TT28305CA3	B	LP08E	RPP/CH2M - Health Physicists	2004	Review and approve procedures - Radcon Engr (2)	7T300		DM00		20.00	HRS	999.80
TT28305CA3	B	LP16E	RPP/CH2M - Technical Writers/Editors	2004	Format procedure change - Proc Writer (2)	7T300		DM00		100.00	HRS	4,214.00
TT28305CA3	B	LP16E	RPP/CH2M - Technical Writers/Editors	2004	Resolve Comments - incorporate comments - Proc Writer (2)	7T300		DM00		40.00	HRS	1,685.60
TT28305CA3	B	LR05B	RPP/CH2M - Nuclear Waste Process Ops	2004	Review, validate and approve procedure - Operator (2)	7T300		DM00		80.00	HRS	3,372.80
TT28305CA3	C	LC02B	RPP/CH2M - Electricians	2004	Review, validate and approve procedure - Craft(10 proc @ 30 hr/ea)	7T300		DM00		300.00	HRS	12,618.00
TT28305CA3	C	LE05E	RPP/CH2M - Environmental Engineers	2004	Review and approve procedures - Environ Engr(10 proc @ 8 hr/ea)	7T300		DM00		80.00	HRS	3,905.60

Cost Estimating Input Sheet

Task Title:	Procedure Development/Training/ATP(Cold Test)/OTP	Revision Number:	b
Sched Act Id:	12.04.02	WBS Number:	A5.02.01.02.07.12.04
Activity Owner:	SST Retrieval	PBS Number:	
Prepared By:	JR Biggs/AREngelman		

P3 Activity	Sub Task	P3 Res Code	ResourceType	Fiscal Year	SubtaskDescription	Org Code	Seq Num	COA	Note Ref	Budget Qty	Qty Type	Total Qty
TT28305CA3	C	LE08E	RPP/CH2M - Nuclear Engineers	2004	Review and approve procedures - Nuclear Safety(10 proc @ 8 hr/ea)	7T300		DM00		80.00	HRS	5,097.60
TT28305CA3	C	LE11E	RPP/CH2M - Quality Control Engrs	2004	Review and approve procedures - QA Engr(10 proc @ 8 hr/ea)	7T300		DM00		80.00	HRS	4,089.60
TT28305CA3	C	LE12E	RPP/CH2M - Safety Engineers	2004	Review and approve procedures - Industrial Safety(10 proc @ 8 hr/ea)	7T300		DM00		80.00	HRS	3,916.00
TT28305CA3	C	LE13E	RPP/CH2M - Other Engineers	2004	Resolve comments, review and approve procedures - COG Engr(10	7T300		DM00		150.00	HRS	9,313.50
TT28305CA3	C	LE13E	RPP/CH2M - Other Engineers	2004	Draft procedure change & perform USQs - Cog Engr(10 proc @ 60 hr/ea)	7T300		DM00		600.00	HRS	37,254.00
TT28305CA3	C	LG02N	RPP/CH2M - Office Clks(General)	2004	Track and issue procedures - Clerk(10 proc @ 8 hr/ea)	7T300		DM00		80.00	HRS	1,694.40
TT28305CA3	C	LM01E	RPP/CH2M - First Line Supervisors	2004	Review and approve procedure - Shift Mgr(10 proc @ 8 hr/ea)	7T300		DM00		80.00	HRS	3,765.60
TT28305CA3	C	LP08E	RPP/CH2M - Health Physicists	2004	Review and approve procedures - Radcon Engr(10 proc @ 8 hr/ea)	7T300		DM00		80.00	HRS	3,999.20
TT28305CA3	C	LP16E	RPP/CH2M - Technical Writers/Editors	2004	Resolve Comments - incorporate comments - Proc Writer(10 proc @ 8	7T300		DM00		80.00	HRS	3,371.20
TT28305CA3	C	LP16E	RPP/CH2M - Technical Writers/Editors	2004	Format procedure change - Proc Writer(10 proc @ 30 hr/ea)	7T300		DM00		300.00	HRS	12,642.00
TT28305CA3	D1	10L	RPP/CH2M Material & Equipment	2004	Material & Consumables	7T300		DM00	1	25.00	$K	25,000.00
TT28305CA3	D1	3PL	RPP/CH2M PHMC Support to RPP	2004	Install equip - field work, 33T Truck Mtd. Crane Pre-Job	7T300		DM00	2,3	6.50	$K	6,500.00
TT28305CA3	D1	LC02B	RPP/CH2M - Electricians	2004	Field work, 2 ea. Electricians Pre-Job	7T300		DM00	2	9.00	HRS	378.54
TT28305CA3	D1	LC08B	RPP/CH2M - Plumbers & Pipefitters	2004	Field work, 2 ea. Pipefitters Pre-Job	7T300		DM00	2	9.00	HRS	355.68
TT28305CA3	D1	LE11E	RPP/CH2M - Quality Control Engrs	2004	Field work, 1 ea. Quality Control Pre-job	7T300		DM00	2	5.00	HRS	255.60
TT28305CA3	D1	LE13E	RPP/CH2M - Other Engineers	2004	Field work, 1 ea. COG Engineer Pre-Job	7T300		DM00	2	5.00	HRS	310.45
TT28305CA3	D1	LM01E	RPP/CH2M - First Line Supervisors	2004	Field work and Test Director, 3 ea. Ops. Pre-Job	7T300		DM00	2	14.00	HRS	658.98
TT28305CA3	D1	LM03E	RPP/CH2M - Project & Program Mgrs	2004	Senior Supervisory Watch Pre-Job	7T300		DM00	2	5.00	HRS	344.75
TT28305CA3	D1	LR05B	RPP/CH2M - Nuclear Waste Process Ops	2004	Field work, 8 ea. Operators Pre-Job	7T300		DM00	2	38.00	HRS	1,602.08
TT28305CA3	D1	LT05B	RPP/CH2M - Health Physics Techs	2004	Field work, 3 ea. HPTs Pre-Job	7T300		DM00	2	14.00	HRS	555.94
TT28305CA3	D1	LT06B	RPP/CH2M - In Health/Safety Tech	2004	Field Work - 1 ea. Pre-job	7T300		DM00	2	5.00	HRS	199.25
TT28305CA3	D2	3PL	RPP/CH2M PHMC Support to RPP	2004	Install equip - field work, 33T Truck Mtd. Crane (4 days) Prep ATP	7T300		DM00	2,3	26.00	$K	26,000.00
TT28305CA3	D2	LC02B	RPP/CH2M - Electricians	2004	Field work, 2 ea. Electricians Prep ATP (4 days)	7T300		DM00	2	77.00	HRS	3,238.62
TT28305CA3	D2	LC08B	RPP/CH2M - Plumbers & Pipefitters	2004	Field work, 2 ea. Pipefitters PrepATP (4 days)	7T300		DM00	2	77.00	HRS	3,043.04
TT28305CA3	D2	LE13E	RPP/CH2M - Other Engineers	2004	Field work, 1 ea. COG Engineer Prep ATP (4 days)	7T300		DM00	2	38.00	HRS	2,359.42
TT28305CA3	D2	LM01E	RPP/CH2M - First Line Supervisors	2004	Field work, 2 ea. Ops. PIC Prep ATP (4 days)	7T300		DM00	2	77.00	HRS	3,624.39

Cost Estimating Input Sheet

Task Title:	Procedure Development/Training/ATP(Cold Test)/OTP	Revision Number:	b
Sched Act Id:	12.04.02	WBS Number:	A5.02.01.02.07.12.04
Activity Owner:	SST Retrieval	PBS Number:	
Prepared By:	JR Biggs/AREngelman		

P3 Activity	Sub Task	P3 Res Code	ResourceType	Fiscal Year	SubtaskDescription	Org Code	Seq Num	COA	Note Ref	Budget Qty	Qty Type	Total Qty
TT28305CA3	D2	LR05B	RPP/CH2M - Nuclear Waste Process Ops	2004	Field work, 6 ea. Operators Prep ATP (4 days)	7T300		DM00	2	230.00	HRS	9,696.80
TT28305CA3	D2	LT05B	RPP/CH2M - Health Physics Techs	2004	Field work, 1 ea. HPTs Prep ATP (4 days)	7T300		DM00	2	38.00	HRS	1,508.98
TT28305CA3	D3	3PL	RPP/CH2M PHMC Support to RPP	2004	Perform ATP Support, 33T Truck Mtd. Crane (10 days)	7T300		DM00	2,3	64.80	$K	64,800.00
TT28305CA3	D3	LC02B	RPP/CH2M - Electricians	2004	Perform ATP Field work, 2 ea. Electricians (10 days)	7T300		DM00	2	192.00	HRS	8,075.52
TT28305CA3	D3	LC08B	RPP/CH2M - Plumbers & Pipefitters	2004	Perform ATP Field work, 2 ea. Pipefitters (10 days)	7T300		DM00	2	192.00	HRS	7,587.84
TT28305CA3	D3	LE11E	RPP/CH2M - Quality Control Engrs	2004	Perform ATP Field work, 1 ea. Quality Control (10 days)	7T300		DM00	2	96.00	HRS	4,907.52
TT28305CA3	D3	LE13E	RPP/CH2M - Other Engineers	2004	Cog Eng, 1 ea. Operator Training at Cold Test (5 Days)	7T300		DM00	2	48.00	HRS	2,980.32
TT28305CA3	D3	LE13E	RPP/CH2M - Other Engineers	2004	Perform ATP Field work, 2 ea. COG Engineer (10 days)	7T300		DM00	2	192.00	HRS	11,921.28
TT28305CA3	D3	LM01E	RPP/CH2M - First Line Supervisors	2004	PIC, 1 ea. Ops. Operator Training at Cold Test (5 Days)	7T300		DM00	2	48.00	HRS	2,259.36
TT28305CA3	D3	LM01E	RPP/CH2M - First Line Supervisors	2004	Trainer, 1 ea. Ops. Operator Training at Cold Test (5 Days)	7T300		DM00	2	48.00	HRS	2,259.36
TT28305CA3	D3	LM01E	RPP/CH2M - First Line Supervisors	2004	Perform ATP Field work Test Director (10 days)	7T300		DM00	2	96.00	HRS	4,518.72
TT28305CA3	D3	LM01E	RPP/CH2M - First Line Supervisors	2004	Perform ATP Field work , 2 ea. Ops. (10 days)	7T300		DM00	2	192.00	HRS	9,037.44
TT28305CA3	D3	LM03E	RPP/CH2M - Project & Program Mgrs	2004	Perform Senior Supervisory Watch (10 days)	7T300		DM00	2	96.00	HRS	6,619.20
TT28305CA3	D3	LR05B	RPP/CH2M - Nuclear Waste Process Ops	2004	Perform ATP Field work, 8 ea. Operators (10 days)	7T300		DM00	2	768.00	HRS	32,378.88
TT28305CA3	D3	LR05B	RPP/CH2M - Nuclear Waste Process Ops	2004	Operators, 12 ea. Ops. Operator Training at Cold Test (5 days)	7T300		DM00	2	576.00	HRS	24,284.16
TT28305CA3	D3	LT05B	RPP/CH2M - Health Physics Techs	2004	Perform ATP Field work, 3 ea. HPTs (10 days)	7T300		DM00	2	288.00	HRS	11,436.48
TT28305CA3	D3	LT06B	RPP/CH2M - In Health/Safety Tech	2004	Perform ATP Field Work - 1 ea.(10 days)	7T300		DM00	2	96.00	HRS	3,825.60
TT28305CA3	E1	LC02B	RPP/CH2M - Electricians	2004	Field work, 2 ea. Electricians OTP Pre-Job	7T300		DM00	2	9.00	HRS	378.54
TT28305CA3	E1	LC08B	RPP/CH2M - Plumbers & Pipefitters	2004	Field work, 2 ea. Pipefitters OTP Pre-Job	7T300		DM00	2	9.00	HRS	355.68
TT28305CA3	E1	LE11E	RPP/CH2M - Quality Control Engrs	2004	Field work, 1 ea. Quality Control OTP Pre-job	7T300		DM00	2	5.00	HRS	255.60
TT28305CA3	E1	LE13E	RPP/CH2M - Other Engineers	2004	Field work, 1 ea. COG Engineer OTP Pre-Job	7T300		DM00	2	5.00	HRS	310.45
TT28305CA3	E1	LM01E	RPP/CH2M - First Line Supervisors	2004	OTP Pre-Job Test Director	7T300		DM00	2	5.00	HRS	235.35
TT28305CA3	E1	LM01E	RPP/CH2M - First Line Supervisors	2004	PIC, 2 ea. Ops. OTP Pre-Job	7T300		DM00	2	9.00	HRS	423.63
TT28305CA3	E1	LM03E	RPP/CH2M - Project & Program Mgrs	2004	Senior Supervisory Watch OTP Pre-Job	7T300		DM00	2	5.00	HRS	344.75
TT28305CA3	E1	LR05B	RPP/CH2M - Nuclear Waste Process Ops	2004	Field work, 8 ea. Operators OTP Pre-Job	7T300		DM00	2	38.00	HRS	1,602.08
TT28305CA3	E1	LT05B	RPP/CH2M - Health Physics Techs	2004	Field work, 3 ea. HPTs OTP Pre-Job	7T300		DM00	2	14.00	HRS	555.94

Cost Estimating Input Sheet

Task Title:	Procedure Development/Training/ATP(Cold Test)/OTP	Revision Number:	b
Sched Act Id:	12.04.02	WBS Number:	A5.02.01.02.07.12.04
Activity Owner:	SST Retrieval	PBS Number:	
Prepared By:	JR Biggs/AREngelman		

P3 Activity	Sub Task	P3 Res Code	ResourceType	Fiscal Year	SubtaskDescription	Org Code	Seq Num	COA	Note Ref	Budget Qty	Qty Type	Total Qty
TT28305CA3	E1	LT06B	RPP/CH2M - In Health/Safety Tech	2004	Field Work - 1 ea. OTP Pre-job	7T300		DM00	2	5.00	HRS	199.25
TT28305CA3	E2	LC02B	RPP/CH2M - Electricians	2004	Perform OTP, 2 ea. Electricians (10 days)	7T300		DM00	2	193.00	HRS	8,117.58
TT28305CA3	E2	LC08B	RPP/CH2M - Plumbers & Pipefitters	2004	Perform OTP, 2 ea. Pipefitters (10 days)	7T300		DM00	2	193.00	HRS	7,627.36
TT28305CA3	E2	LE11E	RPP/CH2M - Quality Control Engrs	2004	Perform OTP , 1 ea. Quality Control (10 days)	7T300		DM00	2	97.00	HRS	4,958.64
TT28305CA3	E2	LE13E	RPP/CH2M - Other Engineers	2004	Perform OTP, 2 ea. COG Engineer (10 days)	7T300		DM00	2	193.00	HRS	11,983.37
TT28305CA3	E2	LM01E	RPP/CH2M - First Line Supervisors	2004	Perform OTP PIC, 2 ea. Ops. (10 days)	7T300		DM00	2	193.00	HRS	9,084.51
TT28305CA3	E2	LM01E	RPP/CH2M - First Line Supervisors	2004	Perform OTP Test Director (10 days)	7T300		DM00	2	97.00	HRS	4,565.79
TT28305CA3	E2	LM03E	RPP/CH2M - Project & Program Mgrs	2004	Senior Supervisory Watch Perform OTP (10 days)	7T300		DM00	2	97.00	HRS	6,688.15
TT28305CA3	E2	LR05B	RPP/CH2M - Nuclear Waste Process Ops	2004	Perform OTP, 8 ea. Operators (10 days)	7T300		DM00	2	767.00	HRS	32,336.72
TT28305CA3	E2	LT05B	RPP/CH2M - Health Physics Techs	2004	Perform OTP, 3 ea. HPTs (10 days)	7T300		DM00	2	287.00	HRS	11,396.77
TT28305CA3	E2	LT06B	RPP/CH2M - In Health/Safety Tech	2004	Perform OTP - 1 ea.(10 days)	7T300		DM00	2	97.00	HRS	3,865.45
TT28305CA3	F	3PL	RPP/CH2M PHMC Support to RPP	2002	Tank Characterization - Lab Analysis	7P300		BA22		470.90	$K	470,900.00
TT28305CA3	G1	21L	RPP/CH2M PO Contracts	2004	Process Control/PNNL engineering interface/support .5 FTE 12 mo@	7P300		B000		81.50	$K	81,500.00
TT28305CA3	G1	98L	RPP/CH2M Cogema	2004	Project Engrng. (.75 FTE for 12mo @ 151hr/mo @ $112/hr) (.25 FTE -12	7P300		B000		195.70	$K	195,700.00
TT28305CA3	G1	98L	RPP/CH2M Cogema	2004	Engr support- 1FTE -12mo @ 151hr/mo @ $90/hr	7P300		B000		163.10	$K	163,100.00
TT28305CA3	G1	98L	RPP/CH2M Cogema	2004	Operations Design Integration .75 FTE 12 mo@ 151hr/mo @$100/hr)	7P300		B000		135.90	$K	135,900.00
TT28305CA3	G2	LE13E	RPP/CH2M - Other Engineers	2004	Process engineering support - .5 FTE	7P300		B000		904.00	HRS	56,129.36
TT28305CA3	H1	3DL	RPP/CH2M Other Hanford Contractors	2004	PNNL - LDMM System testing (1.5FTE @ $110/hr)	7P300		B000		298.30	$K	298,300.00
TT28305CA3	H2	3DL	RPP/CH2M Other Hanford Contractors	2004	PNNL support 1 FTE @ $110/hr.	7P300		B000		198.90	$K	198,900.00

Cost Estimating Input Sheet

Task Title:	Procedure Development/Training/ATP(Cold Test)/OTP	Revision Number:	b
Sched Act Id:	12.04.02	WBS Number:	A5.02.01.02.07.12.04
Activity Owner:	SST Retrieval	PBS Number:	
Prepared By:	JR Biggs/AREngelman		

7.0 Notes:

1. Consumables such as plastic sheeting, tape, containments, and waste bags are included in this figure. Small tools and PPE are provided by Operations and are excluded from this estimate.

2. All labor hours have been increased by 20% to account for unexpected occurances such as weather and resource availability, based on Interim Stabilization experience.

3. The crane crew consists of the following personnel and equipment:
Rates are based on the FY01 published site indirect pool rates
1 - Management PIC (Person in Charge) ($130/hr)
1 - Teamster - Heavy Load Truck Driver ($81/hr)
1 - Operator - Crane Operator ($81/hr)
4 - Ironworker/Riggers - Rig pump for lifting, flag crane operator, etc ($324/hr)
1 - 33T Crane/truck/trailer - ($500/day or $55.56/hr.)
Therefore:
The total Crane and Rigging Crew Hourly Rate = $672/hr rounded
1 day * 8 hrs/ea = 8 hrs X $672 = $5,376

Activity Information - Detail

5.02.01.02.0 S-112 Startup and Readiness

Summary

Activity ID	Activity Title	Cost
12.05.02	MSA	$280,928.92
12.05.03	ICR	$149,918.68
12.05.04	Readiness Assessment (RA)	$251,861.20

Summary for 'TBR' = 5.02.01.02.07.12.05 (3 detail records)

Sum *$682,708.80*

Cost Estimating Input Sheet

Task Title:	MSA	Revision Number:	b
Sched Act Id:	12.05.02	WBS Number:	A5.02.01.02.07.12.05
Activity Owner:	SST Retrieval	PBS Number:	
Prepared By:	JR Biggs/AREngelman		

1.0 Scope Description:

The Plant Readiness Management Self-Assessment is the formal, structured preparation and review activity conducted by facility management to ensure readiness to start S-112 Saltcake Dissolution. Similar to an ORR or an RA, a management self-assessment is a disciplined, systematic, documented, performance-based examination of facilities, equipment, personnel, procedures, and management control systems to ensure that a facility or activity will be operated safely within its approved safety envelope as defined by the facility authorization basis. Verification of Readiness is accomplished by performance-based evaluations, which include (but are not limited to) review of documentation, field observations, interviews, observation of training evolutions, integrated system checkouts or cold run demonstrations, walkdowns of drawings and procedures, and so on. This estimate also includes scope to prepare the Plant Review Plan which is submitted to DOE with a recommendation for the required level of Readiness Review.

Subtasks are:

1) Prepare and Submit the Start Up Notification /Readiness Review Plan
2) Prepare Affidavits
3) Review Affidavits
4) Approve Affidavits

2.0 Estimating Assumptions and Exclusions:

A -Generic project requirements of 30 affidavits, to be prepared and reviewed by multiple disciplines;
A- Averaged time for preparation (24 hrs) and review (24 hrs) of affidavits;
A- Approximately 40% of total time for review of affidavits is conducted by Org. 79800.
A- All activities are conducted per approved and appropriate direction, policies, and procedures.
A- Project/Operations organizations are ready and prepared for the Management Self-Assessment to occur, e.g., minimum rework on documents; all walkdowns and validations complete; all interviews successfully completed.

3.0 Basis of Estimate:

Experience in participating in management self-assessments and Independent Contractor Operational Readiness Review for AW-104 Pump Removal and SY-101 Cross Site Proje

4.0 Estimate Stage and Method:

Preliminary/Analogy

5.0 Legal Drivers/Reference Documents:

Tri-Party Agreement Milestone M-45-03C, "Complete Full Scale Saltcake Waste Retrieval Technology Demonstration at S-112"
DOE Order 413.3, Program and Project Management for the Acquisition of Capital Assets,

RPP-7526, Preliminary Engineering Report for the 241-S-112 Retrieval System

RPP-8791, PRELIMINARY PROJECT EXECUTION PLAN FOR TANK 241-S-112 SALTCAKE WASTE RETRIEVAL TECHNOLOGY DEMONSTRATION

RPP-7825, Single-Shell Tank S-112 Full Scale Saltcake Waste Retrieval technology Demonstration Functions and Requirements

Cost Estimating Input Sheet

Task Title:	MSA	Revision Number:	b
Sched Act Id:	12.05.02	WBS Number:	A5.02.01.02.07.12.05
Activity Owner:	SST Retrieval	PBS Number:	
Prepared By:	JR Biggs/AREngelman		

P3 Activity	Sub Task	P3 Res Code	ResourceType	Fiscal Year	SubtaskDescription	Org Code	Seq Num	COA	Note Ref	Budget Qty	Qty Type	Total Qty
TT28305CR	1	LE10E	RPP/CH2M - Plant Engineers	2004	Write Draft Plan/Incorp Comments - Engineering	7T300		EA10		56.00	HRS	2,340.80
TT28305CR	1	LE10E	RPP/CH2M - Plant Engineers	2004	Review and Comment - OPS Engr	7T300		EA10		8.00	HRS	334.40
TT28305CR	1	LG03B	RPP/CH2M - Office Clks(Specialized)	2004	Write Draft Plan/Incorp Comments - Secretarial Support	7T300		EA10		8.00	HRS	266.72
TT28305CR	1	LM01E	RPP/CH2M - First Line Supervisors	2004	Review and Approve Plan - Manager Startup Group	7T300		EA10		8.00	HRS	376.56
TT28305CR	1	LM02E	RPP/CH2M - Managers & Executives	2004	Review and Approve Plan - Facility Manager, Review leader	7T300		EA10		4.00	HRS	275.96
TT28305CR	2	LE05E	RPP/CH2M - Environmental Engineers	2004	Affidavit Preparation by Facility Organization - ENVIRON	7T300		EA10	1	48.00	HRS	2,343.36
TT28305CR	2	LE08E	RPP/CH2M - Nuclear Engineers	2004	Affidavit Preparation by Facility Organization - HP	7T300		EA10	1	48.00	HRS	3,058.56
TT28305CR	2	LE08E	RPP/CH2M - Nuclear Engineers	2004	Affidavit Preparation by Facility Organization	7T300		EA10	1	72.00	HRS	4,587.84
TT28305CR	2	LE08E	RPP/CH2M - Nuclear Engineers	2004	Affidavit Preparation by Facility Organization - SHIFT	7T300		EA10	1	24.00	HRS	1,529.28
TT28305CR	2	LE08E	RPP/CH2M - Nuclear Engineers	2004	Affidavit Preparation by Facility Organization	7T300		EA10	1	72.00	HRS	4,587.84
TT28305CR	2	LE08E	RPP/CH2M - Nuclear Engineers	2004	Affidavit Preparation by Facility Organization - PAC OPS	7T300		EA10	1	24.00	HRS	1,529.28
TT28305CR	2	LE10E	RPP/CH2M - Plant Engineers	2004	Affidavit Preparation by Facility Organization - MAINT	7T300		EA10	1	96.00	HRS	4,012.80
TT28305CR	2	LE10E	RPP/CH2M - Plant Engineers	2004	Affidavit Preparation by Facility Organization	7T300		EA10	1	120.00	HRS	5,016.00
TT28305CR	2	LE10E	RPP/CH2M - Plant Engineers	2004	Affidavit Preparation by Facility Organization - OPS PROGRAM	7T300		EA10	1	24.00	HRS	1,003.20
TT28305CR	2	LE10E	RPP/CH2M - Plant Engineers	2004	Affidavit Preparation by Facility Organization - EP	7T300		EA10	1	24.00	HRS	1,003.20
TT28305CR	2	LE10E	RPP/CH2M - Plant Engineers	2004	Affidavit Preparation by Facility Organization - ENGR	7T300		EA10	1	168.00	HRS	7,022.40
TT28305CR	2	LE11E	RPP/CH2M - Quality Control Engrs	2004	Affidavit Preparation by Facility Organization - QA	7T300		EA10	1	48.00	HRS	2,453.76
TT28305CR	2	LE12E	RPP/CH2M - Safety Engineers	2004	Affidavit Preparation by Facility Organization - S+L	7T300		EA10	1	24.00	HRS	1,174.80
TT28305CR	2	LE12E	RPP/CH2M - Safety Engineers	2004	Affidavit Preparation by Facility Organization - INDUS SAFETY	7T300		EA10	1	72.00	HRS	3,524.40
TT28305CR	2	LE13E	RPP/CH2M - Other Engineers	2004	Affidavit Preparation by Facility Organization - PROCESS ENGR	7T300		EA10	1	24.00	HRS	1,490.16
TT28305CR	2	LE13E	RPP/CH2M - Other Engineers	2004	Affidavit Preparation by Facility Organization - EQ ENGR	7T300		EA10	1	48.00	HRS	2,980.32
TT28305CR	2	LE13E	RPP/CH2M - Other Engineers	2004	Affidavit Preparation by Facility Organization - HP	7T300		EA10	1	48.00	HRS	2,980.32
TT28305CR	2	LE13E	RPP/CH2M - Other Engineers	2004	Affidavit Preparation by Facility Organization - EP	7T300		EA10	1	24.00	HRS	1,490.16
TT28305CR	2	LE13E	RPP/CH2M - Other Engineers	2004	Affidavit Preparation by Facility Organization - MGT REQ	7T300		EA10	1	24.00	HRS	1,490.16
TT28305CR	2	LE13E	RPP/CH2M - Other Engineers	2004	Affidavit Preparation by Facility Organization - MGT REQ	7T300		EA10	1	24.00	HRS	1,490.16
TT28305CR	2	LP08E	RPP/CH2M - Health Physicists	2004	Affidavit Preparation by Facility Organization - HP	7T300		EA10	1	24.00	HRS	1,199.76

Cost Estimating Input Sheet

Task Title:	MSA	Revision Number:	b
Sched Act Id:	12.05.02	WBS Number:	A5.02.01.02.07.12.05
Activity Owner:	SST Retrieval	PBS Number:	
Prepared By:	JR Biggs/AREngelman		

P3 Activity	Sub Task	P3 Res Code	ResourceType	Fiscal Year	SubtaskDescription	Org Code	Seq Num	COA	Note Ref	Budget Qty	Qty Type	Total Qty
TT28305CR	2	LP15E	RPP/CH2M - Trainers & Instructors	2004	Affidavit Preparation by Facility Organization - TRAINING	7T300		EA10	1	48.00	HRS	2,014.08
TT28305CR	3	LE01E	RPP/CH2M - Chemical Engineers	2004	Affidavit Review by Facility Organization	7T300		EA10	1	24.00	HRS	1,360.32
TT28305CR	3	LE01E	RPP/CH2M - Chemical Engineers	2004	Affidavit Review by Facility Organization	7T300		EA10	1	72.00	HRS	4,080.96
TT28305CR	3	LE05E	RPP/CH2M - Environmental Engineers	2004	Affidavit Review by Facility Organization	7T300		EA10	1	48.00	HRS	2,343.36
TT28305CR	3	LE08E	RPP/CH2M - Nuclear Engineers	2004	Affidavit Review by Facility Organization	7T300		EA10	1	48.00	HRS	3,058.56
TT28305CR	3	LE08E	RPP/CH2M - Nuclear Engineers	2004	Affidavit Review by Facility Organization - OE	7T300		EA10	1	48.00	HRS	3,058.56
TT28305CR	3	LE08E	RPP/CH2M - Nuclear Engineers	2004	Affidavit Review by Facility Organization - OE	7T300		EA10	1	48.00	HRS	3,058.56
TT28305CR	3	LE08E	RPP/CH2M - Nuclear Engineers	2004	Affidavit Review by Facility Organization	7T300		EA10	1	72.00	HRS	4,587.84
TT28305CR	3	LE08E	RPP/CH2M - Nuclear Engineers	2004	Affidavit Review by Facility Organization	7T300		EA10	1	240.00	HRS	15,292.80
TT28305CR	3	LE10E	RPP/CH2M - Plant Engineers	2004	Administration of Affidavits	7T300		EA10	2	240.00	HRS	10,032.00
TT28305CR	3	LE10E	RPP/CH2M - Plant Engineers	2004	Administrative Review and Crosscheck of Affidavits	7T300		EA10	2	240.00	HRS	10,032.00
TT28305CR	3	LE10E	RPP/CH2M - Plant Engineers	2004	Affidavit Review by Facility Organization	7T300		EA10	1	528.00	HRS	22,070.40
TT28305CR	3	LE10E	RPP/CH2M - Plant Engineers	2004	Affidavit Review by Facility Organization	7T300		EA10	1	72.00	HRS	3,009.60
TT28305CR	3	LE13E	RPP/CH2M - Other Engineers	2004	Affidavit Review by Facility Organization	7T300		EA10	1	24.00	HRS	1,490.16
TT28305CR	3	LE13E	RPP/CH2M - Other Engineers	2004	Affidavit Review by Facility Organization - MGT REQ	7T300		EA10	1	24.00	HRS	1,490.16
TT28305CR	4	1PL	RPP/CH2M P Card Purchases	2004	Doc. Review Team Meeting to Compile Cert Pkgs. For Declaration - OFFICE	7T300		EA10	1	2.00	$K	2,000.00
TT28305CR	4	21L	RPP/CH2M PO Contracts	2004	Doc. Review Team Meeting to Compile Cert Pkgs. For Declaration	7T300		EA10	1	25.00	$K	25,000.00
TT28305CR	4	LE08E	RPP/CH2M - Nuclear Engineers	2004	Doc. Review Team Meeting to Compile Cert Pkgs. For Declaration - OE	7T300		EA10	1	269.00	HRS	17,140.68
TT28305CR	4	LE10E	RPP/CH2M - Plant Engineers	2004	Doc. Review Team Meeting to Compile Cert Pkgs. For Declaration	7T300		EA10	1	269.00	HRS	11,244.20
TT28305CR	4	LE10E	RPP/CH2M - Plant Engineers	2004	Doc. Review Team Meeting to Compile Cert Pkgs. For Declaration	7T300		EA10	1	480.00	HRS	20,064.00
TT28305CR	4	LE11E	RPP/CH2M - Quality Control Engrs	2004	Doc. Review Team Meeting to Compile Cert Pkgs. For Declaration - QA	7T300		EA10	1	269.00	HRS	13,751.28
TT28305CR	4	LM01E	RPP/CH2M - First Line Supervisors	2004	Doc. Review Team Meeting to Compile Cert Pkgs. For Declaration -	7T300		EA10	1	480.00	HRS	22,593.60
TT28305CR	4	LM01E	RPP/CH2M - First Line Supervisors	2004	Doc. Review Team Meeting to Compile Cert Pkgs. For Declaration -	7T300		EA10	1	480.00	HRS	22,593.60

Cost Estimating Input Sheet

Task Title:	MSA	Revision Number:	b
Sched Act Id:	12.05.02	WBS Number:	A5.02.01.02.07.12.05
Activity Owner:	SST Retrieval	PBS Number:	
Prepared By:	JR Biggs/AREngelman		

7.0 Notes:

Note 1. Hours based on estimate of 30 affidavits.
Note 2. Administration includes distribution, tracking, scanning, correcting, scheduling, compiling, copying and filing.

Cost Estimating Input Sheet

Task Title:	ICR	Revision Number:	b
Sched Act Id:	12.05.03	WBS Number:	A5.02.01.02.07.12.05
Activity Owner:	SST Retrieval	PBS Number:	
Prepared By:	JR Biggs/AREngelman		

1.0 Scope Description:

The purpose of the Independent Contractor Readiness Review (ICRR), activity is to verify that facilities being started up or restarted are constructed in accordance with approved designs; can be operated safely; will be operated, maintained, and supported by trained and competent personnel; are designed and will be operated in conformance with applicable DOE Orders and regulatory requirements; will be operated so that no undue risk to employees, the public, or the environment results; and that all of previous items are properly and adequately documented.

An Independent team consisting Contract personnel will perform an assessment of the readiness to start S-112 Saltcake Dissolution. The team audits the various Conduct of Operations chapters, various Program requirements, field walkdowns, and drill evaluations. Management and Technical support for interviews is supported by the Facility.

The scope of this activity includes:
1) The Independent Review Team will: obtain training and orientation for specific project, site and facility requirements; conduct interviews, i.e., office and field tours, review documents and prepare the Assessment and associated reports. Conducting interviews is the major function of the ICRR team. The team will interview managers and field technical support personnel, and request project documents for review purposes. Typically, interviews will be conducted orally and require immediate response and feedback. Administration includes; perform oversight and coordination, provide liaison between the team and Project, report status, and provide technical approval.

2) Field Technical Support; The ICRR team will conduct the field reviews of both maintenance and operations, including drills (Assume 3 days in field). Management and Technical personnel supporting the review team are chosen to ensure that collectively their backgrounds will include the important facets of operations to be reviewed.

2.0 Estimating Assumptions and Exclusions:

A - Includes Rad Worker training.
A - Estimates based on previous experience with other tank farm projects.
A - Personnel responsible for supporting the Independent Reviewers will be drawn from existing organizations, and possess adequate technical understanding of the issues and/or activities involved, and have access to pertinent information should the need arise.
A - All activities are conducted per approved and appropriate direction, policies, and procedures.
A - Reschedule of interviews is minimal.
A - Overall duration includes time to complete all activities and external review cycles.
A - Resources available to support on a dedicated basis.
A - Previous activities have been successfully completed.

3.0 Basis of Estimate:

Analysis of similar activities for previous project-review of W-030 Independent Contractor ORR.

4.0 Estimate Stage and Method:

Preliminary/Analogy

5.0 Legal Drivers/Reference Documents:

Tri-Party Agreement Milestone M-45-03C, "Complete Full Scale Saltcake Waste Retrieval Technology Demonstration at S-112"
DOE Order 413.3, Program and Project Management for the Acquisition of Capital Assets,

RPP-7526, Preliminary Engineering Report for the 241-S-112 Retrieval System

RPP-8791, PRELIMINARY PROJECT EXECUTION PLAN FOR TANK 241-S-112 SALTCAKE WASTE RETRIEVAL TECHNOLOGY DEMONSTRATION

Cost Estimating Input Sheet

Task Title:	ICR	Revision Number:	b
Sched Act Id:	12.05.03	WBS Number:	A5.02.01.02.07.12.05
Activity Owner:	SST Retrieval	PBS Number:	
Prepared By:	JR Biggs/AREngelman		

RPP-7825, Single-Shell Tank S-112 Full Scale Saltcake Waste Retrieval technology Demonstration Functions and Requirements

Cost Estimating Input Sheet

Task Title: ICR
Sched Act Id: 12.05.03
Activity Owner: SST Retrieval
Prepared By: JR Biggs/AREngelman

Revision Number: b
WBS Number: A5.02.01.02.07.12.05
PBS Number:

P3 Activity	Sub Task	P3 Res Code	ResourceType	Fiscal Year	SubtaskDescription	Org Code	Seq Num	COA	Note Ref	Budget Qty	Qty Type	Total Qty
TT28305CR	1a	LM01E	RPP/CH2M - First Line Supervisors	2004	Training - Field Tour, Facility Manager	7T300		EA10		4.00	HRS	188.28
TT28305CR	1a	LM01E	RPP/CH2M - First Line Supervisors	2004	Training - Field Tour, HPT Supervisor	7T300		EA10		4.00	HRS	188.28
TT28305CR	1a	LP16E	RPP/CH2M - Technical Writers/Editors	2004	Training - Project Overview, Instructor	7T300		EA10		8.00	HRS	337.12
TT28305CR	1a	LR05B	RPP/CH2M - Nuclear Waste Process Ops	2004	Training - Field Tour, Operator	7T300		EA10		4.00	HRS	168.64
TT28305CR	1a	LT05B	RPP/CH2M - Health Physics Techs	2004	Training - Field Tour, HPT	7T300		EA10		4.00	HRS	158.84
TT28305CR	1b	21L	RPP/CH2M PO Contracts	2004	Independent Review Team - Team Lead (FDH)	7T300		EA10		24.00	$K	24,000.00
TT28305CR	1b	21L	RPP/CH2M PO Contracts	2004	Independent Review Team - Contract Engineers (FDH)	7T300		EA10		27.00	$K	27,000.00
TT28305CR	1b	21L	RPP/CH2M PO Contracts	2004	Administration - Contract Engr	7T300		EA10		13.00	$K	13,000.00
TT28305CR	1b	LE13E	RPP/CH2M - Other Engineers	2004	Independent Review Team - COG (3)	7T300		EA10		300.00	HRS	18,627.00
TT28305CR	1b	LM03E	RPP/CH2M - Project & Program Mgrs	2004	Independent Review Team - Manager	7T300		EA10		200.00	HRS	13,790.00
TT28305CR	1c	LC02B	RPP/CH2M - Electricians	2004	Field Technical Support Interview, Instr. Tech (2)	7T300		EA10		8.00	HRS	336.48
TT28305CR	1c	LC08B	RPP/CH2M - Plumbers & Pipefitters	2004	Field Technical Support Interview, Pipefitter	7T300		EA10		8.00	HRS	316.16
TT28305CR	1c	LE10E	RPP/CH2M - Plant Engineers	2004	Field Technical Support Interview, PIC/OE	7T300		EA10		8.00	HRS	334.40
TT28305CR	1c	LE13E	RPP/CH2M - Other Engineers	2004	Project Management Interview - Safety and Licensing Manager	7T300		EA10		20.00	HRS	1,241.80
TT28305CR	1c	LE13E	RPP/CH2M - Other Engineers	2004	Project Management Interview - Cog Engineer	7T300		EA10		60.00	HRS	3,725.40
TT28305CR	1c	LE13E	RPP/CH2M - Other Engineers	2004	Project Management Interview - Design Authority	7T300		EA10		60.00	HRS	3,725.40
TT28305CR	1c	LM01E	RPP/CH2M - First Line Supervisors	2004	Project Management Interview - Environ Manager	7T300		EA10		2.00	HRS	94.14
TT28305CR	1c	LM01E	RPP/CH2M - First Line Supervisors	2004	Field Technical Support Interview, Shift Mgr (2)	7T300		EA10		8.00	HRS	376.56
TT28305CR	1c	LM01E	RPP/CH2M - First Line Supervisors	2004	Project Management Interview - OPS Manager	7T300		EA10		40.00	HRS	1,882.80
TT28305CR	1c	LM01E	RPP/CH2M - First Line Supervisors	2004	Project Management Interview - Maint. Manager	7T300		EA10		20.00	HRS	941.40
TT28305CR	1c	LM01E	RPP/CH2M - First Line Supervisors	2004	Project Management Interview - Engineering Manager	7T300		EA10		20.00	HRS	941.40
TT28305CR	1c	LM01E	RPP/CH2M - First Line Supervisors	2004	Project Management Interview - QA Manager	7T300		EA10		4.00	HRS	188.28
TT28305CR	1c	LM01E	RPP/CH2M - First Line Supervisors	2004	Administration - Manager	7T300		EA10		80.00	HRS	3,765.60
TT28305CR	1c	LM01E	RPP/CH2M - First Line Supervisors	2004	Administration - Mgr/Project Coordinator	7T300		EA10		160.00	HRS	7,531.20
TT28305CR	1c	LM01E	RPP/CH2M - First Line Supervisors	2004	Project Management Interview - Safety Manager	7T300		EA10		10.00	HRS	470.70
TT28305CR	1c	LR05B	RPP/CH2M - Nuclear Waste Process Ops	2004	Field Technical Support Interview, Operator (5)	7T300		EA10		20.00	HRS	843.20

Cost Estimating Input Sheet

Task Title:	ICR
Sched Act Id:	12.05.03
Activity Owner:	SST Retrieval
Prepared By:	JR Biggs/AREngelman
Revision Number:	b
WBS Number:	A5.02.01.02.07.12.05
PBS Number:	

P3 Activity	Sub Task	P3 Res Code	ResourceType	Fiscal Year	SubtaskDescription	Org Code	Seq Num	COA	Note Ref	Budget Qty	Qty Type	Total Qty
TT28305CR	1c	LT05B	RPP/CH2M - Health Physics Techs	2004	Field Technical Support Interview, HPT (4)	7T300		EA10		16.00	HRS	635.36
TT28305CR	2	LC02B	RPP/CH2M - Electricians	2004	Field Evaluation Support, Instr. Tech (2)	7T300		EA10		48.00	HRS	2,018.88
TT28305CR	2	LC08B	RPP/CH2M - Plumbers & Pipefitters	2004	Field Evaluation Support, Pipefitter (2)	7T300		EA10		48.00	HRS	1,896.96
TT28305CR	2	LE13E	RPP/CH2M - Other Engineers	2004	Field Evaluation Support, 2 ea. COG Engineer	7T300		EA10		48.00	HRS	2,980.32
TT28305CR	2	LM01E	RPP/CH2M - First Line Supervisors	2004	Field Evaluation Support, PIC (2)	7T300		EA10		48.00	HRS	2,259.36
TT28305CR	2	LR05B	RPP/CH2M - Nuclear Waste Process Ops	2004	Field Evaluation Support, Operator (10)	7T300		EA10		240.00	HRS	10,118.40
TT28305CR	2	LT05B	RPP/CH2M - Health Physics Techs	2004	Field Evaluation Support, HPT (4)	7T300		EA10		96.00	HRS	3,812.16
TT28305CR	2	LT07B	RPP/CH2M - Instrument & Control Techs	2004	Field Evaluation Support, Electrician (2)	7T300		EA10		48.00	HRS	2,024.16

Cost Estimating Input Sheet

Task Title:	ICR	Revision Number:	b
Sched Act Id:	12.05.03	WBS Number:	A5.02.01.02.07.12.05
Activity Owner:	SST Retrieval	PBS Number:	
Prepared By:	JR Biggs/AREngelman		

7.0 Notes:

The purpose of the Independent Contractor Readiness Review (ICRR), activity is to verify that facilities being started up or restarted are constructed in accordance with approved designs; can be operated safely; will be operated, maintained, and supported by trained and competent personnel; are designed and will be operated in conformance with applicable DOE Orders and regulatory requirements; will be operated so that no undue risk to employees, the public, or the environment results; and that all of previous items are properly and adequately documented.

An Independent team consisting Contract personnel will perform an assessment of the readiness to start S-112 Saltcake Dissolution. The team audits the various Conduct of Operations chapters, various Program requirements, field walkdowns, and drill evaluations. Management and Technical support for interviews is supported by the Facility.

The scope of this activity includes:
1) The Independent Review Team will: obtain training and orientation for specific project, site and facility requirements; conduct interviews, i.e., office and field tours, review documents and prepare the Assessment and associated reports. Conducting interviews is the major function of the ICRR team. The team will interview managers and field technical support personnel, and request project documents for review purposes. Typically, interviews will be conducted orally and require immediate response and feedback. Administration includes; perform oversight and coordination, provide liaison between the team and Project, report status, and provide technical approval.

Cost Estimating Input Sheet

Task Title:	Readiness Assessment (RA)	Revision Number:	b
Sched Act Id:	12.05.04	WBS Number:	A5.02.01.02.07.12.05
Activity Owner:	SST Retrieval	PBS Number:	
Prepared By:	JR Biggs/AREngelman		

1.0 Scope Description:

This task includes the support and performance for a DOE Readiness Assessment.

1) Resources include Contractor support for the review, Project Management, Engineering, Environmental, Safety, Training, Radcon, Emergency Planning, Operations, and Craft support for interviews, records review, drills (3), and performance demonstrations (5). The duration of the RA is estimated to be 3 weeks with the completion of the CAP to take another week. Most of resources needed to support the RA must be available full time "captured" to perform the required activites per the schedule.

2) The scope also includes the development of a Corrective Action Plan (CAP).

2.0 Estimating Assumptions and Exclusions:

A - Readiness review will be a Readiness Assessment (RA)
A - This Project is enveloped by the current Authorization Basis

E - DOE costs are excluded from this estiamte

3.0 Basis of Estimate:

Subject matter experts were consulted to develop the resources to complete this activity. The resulting estimate is based on their collective field experience with similar work scopes.

4.0 Estimate Stage and Method:

Preliminary/Analogy

5.0 Legal Drivers/Reference Documents:

Tri-Party Agreement Milestone M-45-03C, "Complete Full Scale Saltcake Waste Retrieval Technology Demonstration at S-112"
DOE Order 413.3, Program and Project Management for the Acquisition of Capital Assets,

RPP-7526, Preliminary Engineering Report for the 241-S-112 Retrieval System

RPP-8791, PRELIMINARY PROJECT EXECUTION PLAN FOR TANK 241-S-112 SALTCAKE WASTE RETRIEVAL TECHNOLOGY DEMONSTRATION

RPP-7825, Single-Shell Tank S-112 Full Scale Saltcake Waste Retrieval technology Demonstration Functions and Requirements

Cost Estimating Input Sheet

Task Title:	Readiness Assessment (RA)	Revision Number:	b
Sched Act Id:	12.05.04	WBS Number:	A5.02.01.02.07.12.05
Activity Owner:	SST Retrieval	PBS Number:	
Prepared By:	JR Biggs/AREngelman		

P3 Activity	Sub Task	P3 Res Code	ResourceType	Fiscal Year	SubtaskDescription	Org Code	Seq Num	COA	Note Ref	Budget Qty	Qty Type	Total Qty
TT28305CR	1	21L	RPP/CH2M PO Contracts	2004	Support DOE Readiness Assessment (120hr @ $100/hr)	7T300		EA10		12.00	$K	12,000.00
TT28305CR	1	LC00B	RPP/CH2M - Crafts	2004	Support DOE Readiness Assessment	7T300		EA10		160.00	HRS	6,505.60
TT28305CR	1	LC02B	RPP/CH2M - Electricians	2004	Support DOE Readiness Assessment	7T300		EA10		160.00	HRS	6,729.60
TT28305CR	1	LC08B	RPP/CH2M - Plumbers & Pipefitters	2004	Support DOE Readiness Assessment	7T300		EA10		160.00	HRS	6,323.20
TT28305CR	1	LE05E	RPP/CH2M - Environmental Engineers	2004	Support DOE Readiness Assessment (2)	7T300		EA10		320.00	HRS	15,622.40
TT28305CR	1	LE08E	RPP/CH2M - Nuclear Engineers	2004	Support DOE Readiness Assessment	7T300		EA10		160.00	HRS	10,195.20
TT28305CR	1	LE10E	RPP/CH2M - Plant Engineers	2004	Support DOE Readiness Assessment (4)	7T300		EA10		640.00	HRS	26,752.00
TT28305CR	1	LE13E	RPP/CH2M - Other Engineers	2004	Support DOE Readiness Assessment (2)	7T300		EA10		320.00	HRS	19,868.80
TT28305CR	1	LE13E	RPP/CH2M - Other Engineers	2004	Support DOE Readiness Assessment (2)	7T300		EA10		320.00	HRS	19,868.80
TT28305CR	1	LM01E	RPP/CH2M - First Line Supervisors	2004	Support DOE Readiness Assessment (3.5)	7T300		EA10		560.00	HRS	26,359.20
TT28305CR	1	LM02E	RPP/CH2M - Managers & Executives	2004	Support DOE Readiness Assessment (1.5)	7T300		EA10		240.00	HRS	16,557.60
TT28305CR	1	LM03E	RPP/CH2M - Project & Program Mgrs	2004	Support DOE Readiness Assessment (2)	7T300		EA10		320.00	HRS	22,064.00
TT28305CR	1	LP15E	RPP/CH2M - Trainers & Instructors	2004	Support DOE Readiness Assessment	7T300		EA10		160.00	HRS	6,713.60
TT28305CR	1	LR05B	RPP/CH2M - Nuclear Waste Process Ops	2004	Support DOE Readiness Assessment (3)	7T300		EA10		480.00	HRS	20,236.80
TT28305CR	1	LT05B	RPP/CH2M - Health Physics Techs	2004	Support DOE Readiness Assessment	7T300		EA10		160.00	HRS	6,353.60
TT28305CR	2	21L	RPP/CH2M PO Contracts	2004	Develop and Issue Corrective Action Plan - Contract Engineering (20 hr @	7T300		EA10		1.80	$K	1,800.00
TT28305CR	2	21L	RPP/CH2M PO Contracts	2004	Develop and Issue Corrective Action Plan - Mentor (80 hr @ $90/hr)	7T300		EA10		7.20	$K	7,200.00
TT28305CR	2	LM01E	RPP/CH2M - First Line Supervisors	2004	Develop and Issue Corrective Action Plan - Project Coordinator	7T300		EA10		80.00	HRS	3,765.60
TT28305CR	2	LM01E	RPP/CH2M - First Line Supervisors	2004	Develop and Issue Corrective Action Plan - Safety & Licensing Mgr	7T300		EA10		40.00	HRS	1,882.80
TT28305CR	2	LM01E	RPP/CH2M - First Line Supervisors	2004	Develop and Issue Corrective Action Plan - Safety Mgr	7T300		EA10		40.00	HRS	1,882.80
TT28305CR	2	LM01E	RPP/CH2M - First Line Supervisors	2004	Develop and Issue Corrective Action Plan - Environ Mgr	7T300		EA10		40.00	HRS	1,882.80
TT28305CR	2	LM01E	RPP/CH2M - First Line Supervisors	2004	Develop and Issue Corrective Action Plan - QA Mgr	7T300		EA10		40.00	HRS	1,882.80
TT28305CR	2	LM01E	RPP/CH2M - First Line Supervisors	2004	Develop and Issue Corrective Action Plan - Maint Mgr	7T300		EA10		40.00	HRS	1,882.80
TT28305CR	2	LM01E	RPP/CH2M - First Line Supervisors	2004	Develop and Issue Corrective Action Plan - OPS Mgr	7T300		EA10		80.00	HRS	3,765.60
TT28305CR	2	LM01E	RPP/CH2M - First Line Supervisors	2004	Develop and Issue Corrective Action Plan - Rad Con Mgr	7T300		EA10		40.00	HRS	1,882.80
TT28305CR	2	LM01E	RPP/CH2M - First Line Supervisors	2004	Develop and Issue Corrective Action Plan - Engr Mgr	7T300		EA10		40.00	HRS	1,882.80

Cost Estimating Input Sheet

Task Title:	Readiness Assessment (RA)	Revision Number:	b
Sched Act Id:	12.05.04	WBS Number:	A5.02.01.02.07.12.05
Activity Owner:	SST Retrieval	PBS Number:	
Prepared By:	JR Biggs/AREngelman		

7.0 Notes:

Activity Information - Detail

5.02.01.02.0 S-112 Project Management

Summary

Activity ID	Activity Title	Cost
12.06.01	FY 2001 Actual cost	$379,800.00
12.06.02	Project Management & Administration	$1,092,128.14
12.06.03	Contingency	$2,687,940.00
12.06.04	Fee	

Summary for 'TBR' = 5.02.01.02.07.12.06 (4 detail records)

Sum *$4,159,868.14*

Cost Estimating Input Sheet

Task Title:	FY 2001 Actual cost	Revision Number:	b
Sched Act Id:	12.06.01	WBS Number:	A5.02.01.02.07.12.06
Activity Owner:	SST Retrieval	PBS Number:	
Prepared By:	AREngelman		

1.0 Scope Description:

The activity is included to provide a summary of FY 2001 costs incurred in the project management task

2.0 Estimating Assumptions and Exclusions:

N/A -These are actual costs

3.0 Basis of Estimate:

N/A - These are actual costs

4.0 Estimate Stage and Method:

N/A - These are actual costs

5.0 Legal Drivers/Reference Documents:

Tri-Party Agreement Milestone M-45-03C, "Complete Full Scale Saltcake Waste Retrieval Technology Demonstration at S-112"
DOE Order 413.3, Program and Project Management for the Acquisition of Capital Assets,

RPP-7526, Preliminary Engineering Report for the 241-S-112 Retrieval System

RPP-8791, PRELIMINARY PROJECT EXECUTION PLAN FOR TANK 241-S-112 SALTCAKE WASTE RETRIEVAL TECHNOLOGY DEMONSTRATION

RPP-7825, Single-Shell Tank S-112 Full Scale Saltcake Waste Retrieval technology Demonstration Functions and Requirements

Cost Estimating Input Sheet

Task Title:	FY 2001 Actual cost
Sched Act Id:	12.06.01
Activity Owner:	SST Retrieval
Prepared By:	AREngelman

Revision Number:	b
WBS Number:	A5.02.01.02.07.12.06
PBS Number:	

P3 Activity	Sub Task	P3 Res Code	ResourceType	Fiscal Year	SubtaskDescription	Org Code	Seq Num	COA	Note Ref	Budget Qty	Qty Type	Total Qty
PUTINID	1	2BL	RPP/CH2M Undistributed Budget	2001	FY 2001 actual cost - all resources					379.80	$K	379,800.00

Cost Estimating Input Sheet

Task Title:	FY 2001 Actual cost	Revision Number:	b
Sched Act Id:	12.06.01	WBS Number:	A5.02.01.02.07.12.06
Activity Owner:	SST Retrieval	PBS Number:	
Prepared By:	AREngelman		

7.0 Notes:

Cost Estimating Input Sheet

Task Title:	Project Management & Administration	Revision Number:	b
Sched Act Id:	12.06.02	WBS Number:	A5.02.01.02.07.12.06
Activity Owner:	SST Retrieval	PBS Number:	
Prepared By:	TERainey/AREngelman		

1.0 Scope Description:

This activity includes project management for the S-112 saltcake waste retrieval technology demonstration.
It also includes project control, performance measurements and reporting, project engineering and managing planning and procurement activities.
This level of effort activity includes the following subtasks.

A. Project management
B. Project scheduling support
C. Administrative and clerical support
D. Project control, tracking and reporting of project performance, and project documentation support
E. Procurement of project supplies
F. Project documentation/technical support - For Project CD through design
G. PNNL Project Management

2.0 Estimating Assumptions and Exclusions:

A- The amount of resources required to manage the project is assumed to be approximately level through September 2005.
A- The project will continue through September 2005, including time for project closeout.

E- General training costs for the project staff are not included - They are inlcuded in WBS 5.02.01.01.01.01.- SST Retrieval Project Definition
E- Senior management is not included.

3.0 Basis of Estimate:

The activity is based on LOE support FY 02 through FY 05.
This level of effort and support is based on experience from the SY-101 project.

4.0 Estimate Stage and Method:

Preliminary/Analogy

5.0 Legal Drivers/Reference Documents:

Tri-Party Agreement Milestone M-45-03C, "Complete Full Scale Saltcake Waste Retrieval Technology Demonstration at S-112"
DOE Order 413.3, Program and Project Management for the Acquisition of Capital Assets,

RPP-7526, Preliminary Engineering Report for the 241-S-112 Retrieval System

RPP-8791, PRELIMINARY PROJECT EXECUTION PLAN FOR TANK 241-S-112 SALTCAKE WASTE RETRIEVAL TECHNOLOGY DEMONSTRATION

RPP-7825, Single-Shell Tank S-112 Full Scale Saltcake Waste Retrieval technology Demonstration Functions and Requirements

Cost Estimating Input Sheet

Task Title:	Project Management & Administration	Revision Number:	b
Sched Act Id:	12.06.02	WBS Number:	A5.02.01.02.07.12.06
Activity Owner:	SST Retrieval	PBS Number:	
Prepared By:	TERainey/AREngelman		

P3 Activity	Sub Task	P3 Res Code	ResourceType	Fiscal Year	SubtaskDescription	Org Code	Seq Num	COA	Note Ref	Budget Qty	Qty Type	Total Qty
TT28305B2	A	2TL	RPP/CH2M Travel Expense	2002-2005	Travel allowance (allow 8 trips over 4yr @ $2K/each)	7P300		AA30		16.00	$K	16,000.00
TT28305B2	A	LM03E	RPP/CH2M - Project & Program Mgrs	2002-2005	Project Manager - 1 FTE 48mo	7P300		AA30		7,232.00	HRS	498,646.40
TT28305B2	B	LP07E	RPP/CH2M - Planner/Sched/Estimators	2002-2005	Project Scheduling - (15hr/wk =-30 X 208wk = 3120 hrs.)	7P300		AA30		3,120.00	HRS	135,408.00
TT28305B2	C	LG02N	RPP/CH2M - Office Clks(General)	2002-2005	Secretarial Support - 1 FTE 48mo	7P300		AA30		7,232.00	HRS	153,173.80
TT28305B2	D	98L	RPP/CH2M Cogema	2002-2005	Project control/mgmt. support -(.25 FTE -48 mo. @ 151hr/mo@$96/hr)	7P300		AA30		174.00	$K	174,000.00
TT28305B2	E	1PL	RPP/CH2M P Card Purchases	2002-2005	Misc supplies for project (@$25k/year x 4yr)	7P300		AA30		100.00	$K	100,000.00
TT28305B2	E	98L	RPP/CH2M Cogema	2002-2005	Procurement support for supplies/material (@ 5 hours/mo) 48	7P300		AA30		14.90	$K	14,900.00

Cost Estimating Input Sheet

Task Title:	Project Management & Administration	Revision Number:	b
Sched Act Id:	12.06.02	WBS Number:	A5.02.01.02.07.12.06
Activity Owner:	SST Retrieval	PBS Number:	
Prepared By:	TERainey/AREngelman		

7.0 Notes:

Cost Estimating Input Sheet

Task Title:	Contingency	Revision Number:	b
Sched Act Id:	12.06.03	WBS Number:	A5.02.01.02.07.12.06
Activity Owner:	SST Retrieval	PBS Number:	
Prepared By:	TERainey/AREngelman		

1.0 Scope Description:

This estimate is the project contingency allowance. The contingency percentage applied to this project is 10%

2.0 Estimating Assumptions and Exclusions:

3.0 Basis of Estimate:

This estimate is based on 10% of the project estimate-to-completion beginning October 1, 2001

The subtotal of the estimate is $ 28,370,716 of which $1,491,300 is FY 2001 actual cost.
Therefore, the adjusted base for contingency is $ 26,879,416 X 10% = $2,687,942 contingency

The 10% allowance is appropriate for a preliminary stage estimate which incorporates a risk analysis. Many aspects of the project are based on two previous projects - SY101 and AW 104. Lessons from these projects have been applied to this estimate, resulting in a fairly high level of confidence. The allowance brings the estimate to an 80% confidence level. The allowance provides for rate and pricing uncertainies and for minor unforseen items not currently captured in the estimate.

4.0 Estimate Stage and Method:

5.0 Legal Drivers/Reference Documents:

Tri-Party Agreement Milestone M-45-03C, "Complete Full Scale Saltcake Waste Retrieval Technology Demonstration at S-112"
DOE Order 413.3, Program and Project Management for the Acquisition of Capital Assets,

RPP-7526, Preliminary Engineering Report for the 241-S-112 Retrieval System

RPP-8791, PRELIMINARY PROJECT EXECUTION PLAN FOR TANK 241-S-112 SALTCAKE WASTE RETRIEVAL TECHNOLOGY DEMONSTRATION

RPP-7825, Single-Shell Tank S-112 Full Scale Saltcake Waste Retrieval technology Demonstration Functions and Requirements

Cost Estimating Input Sheet

Task Title:	Contingency	Revision Number:	b
Sched Act Id:	12.06.03	WBS Number:	A5.02.01.02.07.12.06
Activity Owner:	SST Retrieval	PBS Number:	
Prepared By:	TERainey/AREngelman		

P3 Activity	Sub Task	P3 Res Code	ResourceType	Fiscal Year	SubtaskDescription	Org Code	Seq Num	COA	Note Ref	Budget Qty	Qty Type	Total Qty
TT28305BC	A	2BL	RPP/CH2M Undistributed Budget	2002-2005	Contingency allowance	7P300		AQ70		2,687.94	$K	2,687,940.00

Cost Estimating Input Sheet

Task Title:	Contingency	Revision Number:	b
Sched Act Id:	12.06.03	WBS Number:	A5.02.01.02.07.12.06
Activity Owner:	SST Retrieval	PBS Number:	
Prepared By:	TERainey/AREngelman		

7.0 Notes:

Activity Information - Detail

5.02.01.02.0 S-112 Environmental Permits and Plans

Summary

Activity ID	Activity Title	Cost
12.07.01	Environmental Permitting	$109,622.88

Summary for 'TBR' = 5.02.01.02.07.12.07 (1 detail record)

Sum *$109,622.88*

Cost Estimating Input Sheet

Task Title:	Environmental Permitting	Revision Number:	b
Sched Act Id:	12.07.01	WBS Number:	A5.02.01.02.07.12.07
Activity Owner:	SST Retrieval	PBS Number:	
Prepared By:	DJCarrell/AREngelman		

1.0 Scope Description:

This activity includes all required environmental activities as described in RPP-6666 Waste Retrieval System Environmental Permits and Approvals Plan.

2.0 Estimating Assumptions and Exclusions:

A -The estimates contained in the permitting plan assume that this activity will receive a similar level of regulatory interest that past tank farm projects have had from the Washington State Department of Health, Washington State Department of Ecology, and the U. S. Environmental Protection Agency. New activities related to the Site-Wide Air Operating Permit (which was issued on July 2, 2001) have been included. Since this demonstration activity is covered by Tri-Party agreement M-45 milestones, it is assumed that CHG management priority will be high.

E- Work package review during construction,testing, startup and operations is included in those respective activities

3.0 Basis of Estimate:

RPP-6666 Waste Retrieval System Environmental Permits and Approvals Plan and experience on U-107 & C106.

Since this demonstration activity will apply liquids to the surface of the saltcake in Tank 241-S-112, permitting experience for the Tank 241-U-107 "Proof-of-Concept" dissolution was utilized as well as the recently conducted retrieval operations at Tank 241-C-106 (Project W-320). In addition, years of experience in obtaining environmental permits and approvals was drawn upon to develop these estimates.

4.0 Estimate Stage and Method:

Preliminary/Analogy

5.0 Legal Drivers/Reference Documents:

Tri-Party Agreement Milestone M-45-03C, "Complete Full Scale Saltcake Waste Retrieval Technology Demonstration at S-112"
DOE Order 413.3, Program and Project Management for the Acquisition of Capital Assets,

RPP-7526, Preliminary Engineering Report for the 241-S-112 Retrieval System

RPP-8791, PRELIMINARY PROJECT EXECUTION PLAN FOR TANK 241-S-112 SALTCAKE WASTE RETRIEVAL TECHNOLOGY DEMONSTRATION

RPP-7825, Single-Shell Tank S-112 Full Scale Saltcake Waste Retrieval technology Demonstration Functions and Requirements

Cost Estimating Input Sheet

Task Title:	Environmental Permitting
Sched Act Id:	12.07.01
Activity Owner:	SST Retrieval
Prepared By:	DJCarrell/AREngelman
Revision Number:	b
WBS Number:	A5.02.01.02.07.12.07
PBS Number:	

P3 Activity	Sub Task	P3 Res Code	ResourceType	Fiscal Year	SubtaskDescription	Org Code	Seq Num	COA	Note Ref	Budget Qty	Qty Type	Total Qty
TT28305KC	A	LE05E	RPP/CH2M - Environmental Engineers	2002	Review/Approve adequacy of existing NEPA Documentation	7B200		CA40		40.00	HRS	1,952.80
TT28305KC	B	LE05E	RPP/CH2M - Environmental Engineers	2002	Confirm/document coverage by blanket biological review	7B200		CA40		6.00	HRS	292.92
TT28305KC	C	LE05E	RPP/CH2M - Environmental Engineers	2002	Define/document work outside of blanket biological review areas	7B200		CA40		12.00	HRS	585.84
TT28305KC	D	LE05E	RPP/CH2M - Environmental Engineers	2002	Request/support minor modifications (assume 1 mod) of AOP	7B200		CA40		60.00	HRS	2,929.20
TT28305KC	E	1PL	RPP/CH2M P Card Purchases	2002	Prepare/submit NOC (assume 1 NOC) ; priniting	7B200		CA40		2.00	$K	2,000.00
TT28305KC	E	LE05E	RPP/CH2M - Environmental Engineers	2002	Prepare/submit NOC (assume 1 NOC) ; Support WDOH approval	7B200		CA40		650.00	HRS	31,733.00
TT28305KC	F	LE05E	RPP/CH2M - Environmental Engineers	2002	Review/Approve Drinking Water Supply Changes	7B200		CA40		60.00	HRS	2,929.20
TT28305KC	G	LE05E	RPP/CH2M - Environmental Engineers	2002	Review/Include SWDP conditions in Wastewater Disposal Procedures	7B200		CA40		60.00	HRS	2,929.20
TT28305KC	H	10L	RPP/CH2M Material & Equipment	2002	Request/Support Class 1 Prime Permit Modification	7B200		CA40		1.00	$K	1,000.00
TT28305KC	H	LE05E	RPP/CH2M - Environmental Engineers	2002	Request/Support Class 1 Prime Permit Modification	7B200		CA40		200.00	HRS	9,764.00
TT28305KC	J	LE05E	RPP/CH2M - Environmental Engineers	2002	Perform Update of Envirnmental Plan (assume 2 moderately complex updates	7B200		CA40		160.00	HRS	7,811.20
TT28305KC	K	LE05E	RPP/CH2M - Environmental Engineers	2002	Provide guidance/issue resolution-CD phase (@ 5 hrs/week)	7B200		CA40		260.00	HRS	12,693.20
TT28305KC	L	LE05E	RPP/CH2M - Environmental Engineers	2003	Provide guidance/issue resolution-DD phase (@ 5 hrs/week)	7B200		CA40		260.00	HRS	12,693.20
TT28305KC	M	LE05E	RPP/CH2M - Environmental Engineers	2003	Review ECNs during construction(@ 5 hr/week)	7B200		CA40		260.00	HRS	12,693.20
TT28305KC	N	LE05E	RPP/CH2M - Environmental Engineers	2003	Support onsite inspections during construction (@ 3 hr/week)	7B200		CA40		156.00	HRS	7,615.92

Cost Estimating Input Sheet

Task Title:	Environmental Permitting	Revision Number:	b
Sched Act Id:	12.07.01	WBS Number:	A5.02.01.02.07.12.07
Activity Owner:	SST Retrieval	PBS Number:	
Prepared By:	DJCarrell/AREngelman		

7.0 Notes:

Activity Information - Detail

5.02.01.02.0 S-112 Safety Analysis

Summary

Activity ID	Activity Title	Cost
12.08.02	Safety	$109,508.17
12.08.03	Authorization Basis Support	$73,677.50

Summary for 'TBR' = 5.02.01.02.07.12.08 (2 detail records)

Sum *$183,185.67*

Cost Estimating Input Sheet

Task Title:	Safety	Revision Number:	a
Sched Act Id:	12.08.02	WBS Number:	A5.02.01.02.07.12.08
Activity Owner:	SST Retrieval	PBS Number:	
Prepared By:	CEHanson/AREngelman		

1.0 Scope Description:

This task includes preparation of the preliminary hazards evaluation, preliminary safety evaluation, criticality safety evaluation, human factors report, and also includes safety review of ECNs and design reviews.

2.0 Estimating Assumptions and Exclusions:

E- Safety support after design in included in the respective activitiies where support is required.

3.0 Basis of Estimate:

Estimates are based on historical experience for past tank farm work in the interim stabilization program.

4.0 Estimate Stage and Method:

Preliminary/Analogy

5.0 Legal Drivers/Reference Documents:

Tri-Party Agreement Milestone M-45-03C, "Complete Full Scale Saltcake Waste Retrieval Technology Demonstration at S-112"
DOE Order 413.3, Program and Project Management for the Acquisition of Capital Assets,

RPP-7526, Preliminary Engineering Report for the 241-S-112 Retrieval System

RPP-8791, PRELIMINARY PROJECT EXECUTION PLAN FOR TANK 241-S-112 SALTCAKE WASTE RETRIEVAL TECHNOLOGY DEMONSTRATION

RPP-7825, Single-Shell Tank S-112 Full Scale Saltcake Waste Retrieval technology Demonstration Functions and Requirements

Cost Estimating Input Sheet

Task Title:	Safety
Sched Act Id:	12.08.02
Activity Owner:	SST Retrieval
Prepared By:	CEHanson/AREngelman
Revision Number:	a
WBS Number:	A5.02.01.02.07.12.08
PBS Number:	

P3 Activity	Sub Task	P3 Res Code	ResourceType	Fiscal Year	SubtaskDescription	Org Code	Seq Num	COA	Note Ref	Budget Qty	Qty Type	Total Qty
TT28305KD	A	LE08E	RPP/CH2M - Nuclear Engineers	2002	Prepare preliminary hazards report & update	7B100		CB80		320.00	HRS	20,390.40
TT28305KD	A	LE11E	RPP/CH2M - Quality Control Engrs	2002	Prepare preliminary hazards report & update	7B100		CB80		9.00	HRS	460.08
TT28305KD	A	LE13E	RPP/CH2M - Other Engineers	2002	Prepare preliminary hazards report- 3 engr - design auth/cog/project.	7B100		CB80		36.00	HRS	2,235.24
TT28305KD	A	LG02N	RPP/CH2M - Office Clks(General)	2002	Prepare preliminary hazards report & update	7B100		CB80		32.00	HRS	677.76
TT28305KD	A	LM03E	RPP/CH2M - Project & Program Mgrs	2002	Prepare preliminary hazards report- Ops & Rad Con Mgmt.	7B100		CB80		18.00	HRS	1,241.10
TT28305KD	B	LE08E	RPP/CH2M - Nuclear Engineers	2002	Prepare preliminary safety evaluation & update	7B100		CB80		320.00	HRS	20,390.40
TT28305KD	B	LE11E	RPP/CH2M - Quality Control Engrs	2002	Prepare preliminary safety evaluation & update	7B100		CB80		18.00	HRS	920.16
TT28305KD	B	LE13E	RPP/CH2M - Other Engineers	2002	Prepare preliminary safety evaluation & update-3 engr - design auth/cog/project.	7B100		CB80		60.00	HRS	3,725.40
TT28305KD	B	LG02N	RPP/CH2M - Office Clks(General)	2002	Prepare preliminary safety evaluation & update	7B100		CB80		32.00	HRS	677.76
TT28305KD	B	LM03E	RPP/CH2M - Project & Program Mgrs	2002	Prepare preliminary safety evaluation & update- Ops & Rad Con Mgmt.	7B100		CB80		36.00	HRS	2,482.20
TT28305KD	B1	LE11E	RPP/CH2M - Quality Control Engrs	2002	Perform preliminary USQ evaluation	7B100		CB80		320.00	HRS	16,358.40
TT28305KD	C	LE07E	RPP/CH2M - Mechanical Engineers	2002	Prepare human factors report	7B100		CB80		80.00	HRS	4,152.00
TT28305KD	C	LE08E	RPP/CH2M - Nuclear Engineers	2002	Prepare human factors report	7B100		CB80		4.00	HRS	254.88
TT28305KD	C	LE11E	RPP/CH2M - Quality Control Engrs	2002	Prepare human factors report	7B100		CB80		27.00	HRS	1,380.24
TT28305KD	C	LE13E	RPP/CH2M - Other Engineers	2002	Prepare human factors report -Ops & Rad Con Mgmt.- 3 engr - design	7B100		CB80		9.00	HRS	558.81
TT28305KD	C	LG02N	RPP/CH2M - Office Clks(General)	2002	Prepare human factors report	7B100		CB80		18.00	HRS	381.24
TT28305KD	C	LM03E	RPP/CH2M - Project & Program Mgrs	2002	Prepare human factors report -Ops & Rad Con Mgmt.	7B100		CB80		6.00	HRS	413.70
TT28305KD	D	LE13E	RPP/CH2M - Other Engineers	2002	Criticality Safety Evaluation - 200 hr.	7B100		CB80		200.00	HRS	12,418.00
TT28305KD	E	LE08E	RPP/CH2M - Nuclear Engineers	2002	Design and ECN reviews	7B100		CB80		160.00	HRS	10,195.20
TT28305KD	E	LE08E	RPP/CH2M - Nuclear Engineers	2003	Design and ECN reviews	7B100		CB80		160.00	HRS	10,195.20

Cost Estimating Input Sheet

Task Title:	Safety	Revision Number:	a
Sched Act Id:	12.08.02	WBS Number:	A5.02.01.02.07.12.08
Activity Owner:	SST Retrieval	PBS Number:	
Prepared By:	CEHanson/AREngelman		

7.0 Notes:

Cost Estimating Input Sheet

Task Title:	Authorization Basis Support	Revision Number:	a
Sched Act Id:	12.08.03	WBS Number:	5.02.01.02.07.12.08
Activity Owner:	SST Retrieval	PBS Number:	
Prepared By:	CEHanson/AREngelman		

1.0 Scope Description:

This activity includes authorization basis support for the project. These activities include:

A. Review of safety documenation and procedures
B. Preparation of ECN to the SAR/TSR and implement SAR/TSR changes
C.Preparation of process standards changes

2.0 Estimating Assumptions and Exclusions:

This assumes only minor descriptive changes in the SAR/TSR are required. (I.e. NO AB change required)

3.0 Basis of Estimate:

Estimates are based on historical data for past tank farm work in the interim stabilization program.

4.0 Estimate Stage and Method:

Preliminary/Analogy

5.0 Legal Drivers/Reference Documents:

Tri-Party Agreement Milestone M-45-03C, "Complete Full Scale Saltcake Waste Retrieval Technology Demonstration at S-112"
DOE Order 413.3, Program and Project Management for the Acquisition of Capital Assets,

RPP-7526, *Preliminary Engineering Report for the 241-S-112 Retrieval System*

RPP-8791, PRELIMINARY PROJECT EXECUTION PLAN FOR TANK 241-S-112 SALTCAKE WASTE RETRIEVAL TECHNOLOGY DEMONSTRATION

RPP-7825, Single-Shell Tank S-112 Full Scale Saltcake Waste Retrieval technology Demonstration Functions and Requirements

Cost Estimating Input Sheet

Task Title:	Authorization Basis Support	Revision Number:	a
Sched Act Id:	12.08.03	WBS Number:	5.02.01.02.07.12.08
Activity Owner:	SST Retrieval	PBS Number:	
Prepared By:	CEHanson/AREngelman		

P3 Activity	Sub Task	P3 Res Code	ResourceType	Fiscal Year	SubtaskDescription	Org Code	Seq Num	COA	Note Ref	Budget Qty	Qty Type	Total Qty
TT28305KD	A	LE08E	RPP/CH2M - Nuclear Engineers	2002	Review safety documentation and procedures	7B300		CB80		120.00	HRS	7,646.40
TT28305KD	B	LE08E	RPP/CH2M - Nuclear Engineers	2002	Preparation of ECN to the SAR/TSR and implement SAR/TSR changes	7B300		CB80		220.00	HRS	14,018.40
TT28305KD	B	LE11E	RPP/CH2M - Quality Control Engrs	2002	Preparation of ECN to the SAR/TSR and implement SAR/TSR changes	7B300		CB80		60.00	HRS	3,067.20
TT28305KD	B	LE13E	RPP/CH2M - Other Engineers	2002	Preparation of ECN to the SAR/TSR and implement SAR/TSR changes	7B300		CB80		220.00	HRS	13,659.80
TT28305KD	B	LG02N	RPP/CH2M - Office Clks(General)	2002	Preparation of ECN to the SAR/TSR and implement SAR/TSR changes	7B300		CB80		80.00	HRS	1,694.40
TT28305KD	B	LM03E	RPP/CH2M - Project & Program Mgrs	2002	Preparation of ECN to the SAR/TSR and implement SAR/TSR changes (3	7B300		CB80		200.00	HRS	13,790.00
TT28305KD	C	LE08E	RPP/CH2M - Nuclear Engineers	2002	Prepare & approve process standards change	7B300		CB80		168.00	HRS	10,704.96
TT28305KD	C	LE11E	RPP/CH2M - Quality Control Engrs	2002	Prepare & approve process standards change	7B300		CB80		10.00	HRS	511.20
TT28305KD	C	LE13E	RPP/CH2M - Other Engineers	2002	Prepare & approve process standards change	7B300		CB80		52.00	HRS	3,228.68
TT28305KD	C	LG02N	RPP/CH2M - Office Clks(General)	2002	Prepare & approve process standards change-envr/ops/radcon mgr	7B300		CB80		12.00	HRS	254.16
TT28305KD	C	LM03E	RPP/CH2M - Project & Program Mgrs	2002	Prepare & approve process standards change-envr/ops/radcon mgr	7B300		CB80		74.00	HRS	5,102.30

Cost Estimating Input Sheet

Task Title:	Authorization Basis Support	Revision Number:	a
Sched Act Id:	12.08.03	WBS Number:	5.02.01.02.07.12.08
Activity Owner:	SST Retrieval	PBS Number:	
Prepared By:	CEHanson/AREngelman		

7.0 Notes:

Activity Information - Detail

5.02.01.02.0 Develop S-112 F&R Document

Summary

Activity ID	Activity Title	Cost
12.09.01	FY 2001 Actual Cost - TPA F&R	$287,000.00
12.09.02	F&R Document	$195,352.40

Summary for 'TBR' = 5.02.01.02.07.12.09 (2 detail records)

Sum *$482,352.40*

Cost Estimating Input Sheet

Task Title:	FY 2001 Actual Cost - TPA F&R	Revision Number:	a
Sched Act Id:	12.09.01	WBS Number:	5.02.01.02.07.12.09
Activity Owner:	SST Retrieval	PBS Number:	
Prepared By:	CEHanson/AREngelman		

1.0 Scope Description:

The activity includes FY 01 costs associated with the preparation and submittal of the S-112 Saltcake Waste Retrieval Technology Demonstration Functions and Requirements Document for the 11/30/01 deliverable.

2.0 Estimating Assumptions and Exclusions:

N/A - These are actual costs

3.0 Basis of Estimate:

These are actual costs for FY 01 Contract 4414 Release 76 & 79 and Contract 6622 Release 30

4.0 Estimate Stage and Method:

N/A - These are actual costs

5.0 Legal Drivers/Reference Documents:

Tri-Party Agreement Milestone M-45-03C, "Complete Full Scale Saltcake Waste Retrieval Technology Demonstration at S-112"
DOE Order 413.3, Program and Project Management for the Acquisition of Capital Assets,

RPP-7526, Preliminary Engineering Report for the 241-S-112 Retrieval System

RPP-8791, PRELIMINARY PROJECT EXECUTION PLAN FOR TANK 241-S-112 SALTCAKE WASTE RETRIEVAL TECHNOLOGY DEMONSTRATION

RPP-7825, Single-Shell Tank S-112 Full Scale Saltcake Waste Retrieval technology Demonstration Functions and Requirements

Cost Estimating Input Sheet

Task Title:	FY 2001 Actual Cost - TPA F&R
Sched Act Id:	12.09.01
Activity Owner:	SST Retrieval
Prepared By:	CEHanson/AREngelman

Revision Number:	a
WBS Number:	5.02.01.02.07.12.09
PBS Number:	

P3 Activity	Sub Task	P3 Res Code	ResourceType	Fiscal Year	SubtaskDescription	Org Code	Seq Num	COA	Note Ref	Budget Qty	Qty Type	Total Qty
TT28305FR	A	2BL	RPP/CH2M Undistributed Budget	2001	FY 2001 Actual cost - all resources					287.00	$K	287,000.00

Cost Estimating Input Sheet

Task Title:	FY 2001 Actual Cost - TPA F&R	Revision Number:	a
Sched Act Id:	12.09.01	WBS Number:	5.02.01.02.07.12.09
Activity Owner:	SST Retrieval	PBS Number:	
Prepared By:	CEHanson/AREngelman		

7.0 Notes:

Cost Estimating Input Sheet

Task Title:	F&R Document	Revision Number:	a
Sched Act Id:	12.09.02	WBS Number:	5.02.01.02.07.12.09
Activity Owner:	SST Retrieval	PBS Number:	
Prepared By:	CEHanson/AREngelman		

1.0 Scope Description:

The activity includes activities associated with revisions and final release of the S-112 Saltcake Waste Retrieval Technology Demonstration Functions and Requirements (F&R) Document. These include:

A.F&R preparation
A1. Prepare final draft and release F&R
A2. Revise F&R document

B. Update Scoping Retrieval Performance Evaluation (RPE)

2.0 Estimating Assumptions and Exclusions:

N/A - These are actual costs

3.0 Basis of Estimate:

Based on experienced engineering judgement using similar experience

4.0 Estimate Stage and Method:

Preliminary/Analogy

5.0 Legal Drivers/Reference Documents:

Tri-Party Agreement Milestone M-45-03C, "Complete Full Scale Saltcake Waste Retrieval Technology Demonstration at S-112"
DOE Order 413.3, Program and Project Management for the Acquisition of Capital Assets,

RPP-7526, Preliminary Engineering Report for the 241-S-112 Retrieval System

RPP-8791, PRELIMINARY PROJECT EXECUTION PLAN FOR TANK 241-S-112 SALTCAKE WASTE RETRIEVAL TECHNOLOGY DEMONSTRATION

RPP-7825, Single-Shell Tank S-112 Full Scale Saltcake Waste Retrieval technology Demonstration Functions and Requirements

Cost Estimating Input Sheet

Task Title:	FY 2001 Actual Cost - TPA F&R	Revision Number:	a
Sched Act Id:	12.09.01	WBS Number:	5.02.01.02.07.12.09
Activity Owner:	SST Retrieval	PBS Number:	
Prepared By:	CEHanson/AREngelman		

7.0 Notes:

Cost Estimating Input Sheet

Task Title:	F&R Document	Revision Number:	a
Sched Act Id:	12.09.02	WBS Number:	5.02.01.02.07.12.09
Activity Owner:	SST Retrieval	PBS Number:	
Prepared By:	CEHanson/AREngelman		

1.0 Scope Description:

The activity includes activities associated with revisions and final release of the S-112 Saltcake Waste Retrieval Technology Demonstration Functions and Requirements (F&R) Document. These include:

A.F&R preparation
A1. Prepare final draft and release F&R
A2. Revise F&R document

B. Update Scoping Retrieval Performance Evaluation (RPE)

2.0 Estimating Assumptions and Exclusions:

N/A - These are actual costs

3.0 Basis of Estimate:

Based on experienced engineering judgement using similar experience

4.0 Estimate Stage and Method:

Preliminary/Analogy

5.0 Legal Drivers/Reference Documents:

Tri-Party Agreement Milestone M-45-03C, "Complete Full Scale Saltcake Waste Retrieval Technology Demonstration at S-112"
DOE Order 413.3, Program and Project Management for the Acquisition of Capital Assets,

RPP-7526, Preliminary Engineering Report for the 241-S-112 Retrieval System

RPP-8791, PRELIMINARY PROJECT EXECUTION PLAN FOR TANK 241-S-112 SALTCAKE WASTE RETRIEVAL TECHNOLOGY DEMONSTRATION

RPP-7825, Single-Shell Tank S-112 Full Scale Saltcake Waste Retrieval technology Demonstration Functions and Requirements

Cost Estimating Input Sheet

Task Title:	F&R Document
Sched Act Id:	12.09.02
Activity Owner:	SST Retrieval
Prepared By:	CEHanson/AREngelman

Revision Number:	a
WBS Number:	5.02.01.02.07.12.09
PBS Number:	

P3 Activity	Sub Task	P3 Res Code	ResourceType	Fiscal Year	SubtaskDescription	Org Code	Seq Num	COA	Note Ref	Budget Qty	Qty Type	Total Qty
TT28305FR	A1	21L	RPP/CH2M PO Contracts	2002	Prepare final draft and release F&R 360 hr total - 200 hr @ $90/hr	7P300		BA22		18.00	$K	18,000.00
TT28305FR	A1	LE13E	RPP/CH2M - Other Engineers	2002	Prepare final draft and release F&R 360 hr total - 160 hr	7P300		BA22		160.00	HRS	9,934.40
TT28305FR	A2	21L	RPP/CH2M PO Contracts	2002	Revise F&R document 550 hr total - 350 hr A/E @ $100/hr	7P300		BA31		35.00	$K	35,000.00
TT28305FR	A2	LE13E	RPP/CH2M - Other Engineers	2002	Revise F&R document 550 hr total - 200 hr	7P300		BA31		200.00	HRS	12,418.00
TT28305FR	B	21L	RPP/CH2M PO Contracts	2002	Update RPE 1200 hr @ $100/hr	7P300		BA31		120.00	$K	120,000.00

Cost Estimating Input Sheet

Task Title:	F&R Document	Revision Number:	a
Sched Act Id:	12.09.02	WBS Number:	5.02.01.02.07.12.09
Activity Owner:	SST Retrieval	PBS Number:	
Prepared By:	CEHanson/AREngelman		

7.0 Notes:

Activity Information - Detail

5.02.01.04.0 Operate S-112 Retrieval System

Summary

Activity ID	Activity Title	Cost
07.12.01	Operations	$2,413,115.74
07.12.02	Preventive/Corrective Maintenance	$430,434.91
07.12.03	S112 Retrieval Demonstration Evaluation	$705,598.88
07.12.04	Isolate/Post Disconnect/Remove Equipment	$336,592.34
07.12.06	Operations Engineering	$952,029.36

Summary for 'TBR' = 5.02.01.04.07.12 (5 detail records)

Sum *$4,837,771.23*

Cost Estimating Input Sheet

Task Title:	Operations	Revision Number:	b
Sched Act Id:	07.12.01	WBS Number:	A5.02.01.04.07.12
Activity Owner:	SST Retrieval	PBS Number:	
Prepared By:	JR Biggs/AREngelman		

1.0 Scope Description:

This task will provide the resources necessary to support Solids Removal on a 24/7 coverage. Activities are scheduled to last 180 days and include Solids Retrieval, Transfers, and process monitoring.

Sub Tasks include:

1) Two Operators; One Operations Engineer (OE); One HPT on shift for the duration of planned activities. - 180 days
2) Increased frequency of drywell monitoring to alternating days. -90 days
3) Video scans on alternating days. 90 days
4) Daily spray adjustments (5 Day work week = 129 days).
5) Additional duties monitoring the LDMM/process monitoring system/equip. and reviewing data. (4 Shifts/week)

2.0 Estimating Assumptions and Exclusions:

A - Current standard practices for rad con and industrial heatlth & safety remains unchanged
A - All work will be accomplished by personnel who are familiar with Tank Farm systems and equipment.
A - Major events such as: radiation release, exhauster shut down or ammonia gas release are not anticipated.

3.0 Basis of Estimate:

A team of subject matter experts consisting of Management/Engineering/Operations were interviewed for an understanding of the activity scope, resources and work process. Where applicable Lessons Learned from the installation of the transfer system in Tank SY-101 have been incorporated in to estimates and planning.

The operations duration is based on 1.8M gallons @ 10 gal/min @ 70% efficiency.

4.0 Estimate Stage and Method:

Preliminary/Analogy

5.0 Legal Drivers/Reference Documents:

Tri-Party Agreement Milestone M-45-03C, "Complete Full Scale Saltcake Waste Retrieval Technology Demonstration at S-112"
DOE Order 413.3, Program and Project Management for the Acquisition of Capital Assets,

RPP-7526, Preliminary Engineering Report for the 241-S-112 Retrieval System

RPP-8791, PRELIMINARY PROJECT EXECUTION PLAN FOR TANK 241-S-112 SALTCAKE WASTE RETRIEVAL TECHNOLOGY DEMONSTRATION

RPP-7825, Single-Shell Tank S-112 Full Scale Saltcake Waste Retrieval technology Demonstration Functions and Requirements

Cost Estimating Input Sheet

Task Title:	Operations	Revision Number:	b
Sched Act Id:	07.12.01	WBS Number:	A5.02.01.04.07.12
Activity Owner:	SST Retrieval	PBS Number:	
Prepared By:	JR Biggs/AREngelman		

P3 Activity	Sub Task	P3 Res Code	ResourceType	Fiscal Year	SubtaskDescription	Org Code	Seq Num	COA	Note Ref	Budget Qty	Qty Type	Total Qty
TT28305CA6	1	LM01E	RPP/CH2M - First Line Supervisors	2005	Field Work -1 ea. Ops Eng 24hr-7 days/week	7T300		EA00	1	6,480.00	HRS	305,013.60
TT28305CA6	1	LR05B	RPP/CH2M - Nuclear Waste Process Ops	2005	Shift Operators (2ea) 24hr-7 days/week	7T300		EA00	1	12,960.00	HRS	546,393.60
TT28305CA6	1	LT05B	RPP/CH2M - Health Physics Techs	2005	Field Work -1 ea. HPTs 24hr-7 days/week	7T300		EA00	1	6,480.00	HRS	257,320.80
TT28305CA6	2	LE13E	RPP/CH2M - Other Engineers	2005	Review Data, 1ea. Engineer	7T300		EA00	2	432.00	HRS	26,822.88
TT28305CA6	2	LM01E	RPP/CH2M - First Line Supervisors	2005	Field Work -1 ea. Ops PIC	7T300		EA00	2	432.00	HRS	20,334.24
TT28305CA6	2	LR05B	RPP/CH2M - Nuclear Waste Process Ops	2005	Operators (3 ea) 4 hrs/deployment	7T300		EA00	2	1,080.00	HRS	45,532.80
TT28305CA6	2	LT05B	RPP/CH2M - Health Physics Techs	2005	Field Work -1 ea. HPTs	7T300		EA00	2	432.00	HRS	17,154.72
TT28305CA6	3	LE13E	RPP/CH2M - Other Engineers	2005	Field Work -1 ea. COG Cngineer	7T300		EA00	2	1,296.00	HRS	80,468.64
TT28305CA6	3	LM01E	RPP/CH2M - First Line Supervisors	2005	Field Work -1 ea. Ops PIC	7T300		EA00	2	432.00	HRS	20,334.24
TT28305CA6	3	LR05B	RPP/CH2M - Nuclear Waste Process Ops	2005	Field Work -5 ea. Operators	7T300		EA00	2	2,160.00	HRS	91,065.60
TT28305CA6	3	LT05B	RPP/CH2M - Health Physics Techs	2005	Field Work -1 ea. HPT	7T300		EA00	2	432.00	HRS	17,154.72
TT28305CA6	4	LC02B	RPP/CH2M - Electricians	2005	Field Work -1 ea. Electricians	7T300		EA00	2	1,239.00	HRS	52,112.34
TT28305CA6	4	LC08B	RPP/CH2M - Plumbers & Pipefitters	2005	Field Work 2 ea. Pipefitters	7T300		EA00	2	2,478.00	HRS	97,930.56
TT28305CA6	4	LE11E	RPP/CH2M - Quality Control Engrs	2005	Field Work -1 ea. Quality Control	7T300		EA00	2	1,239.00	HRS	63,337.68
TT28305CA6	4	LE13E	RPP/CH2M - Other Engineers	2005	Field Work 1 ea. COG Engineer	7T300		EA00	2	1,239.00	HRS	76,929.51
TT28305CA6	4	LM01E	RPP/CH2M - First Line Supervisors	2005	Field Work 1 ea. Ops PIC	7T300		EA00	2	1,239.00	HRS	58,319.73
TT28305CA6	4	LR05B	RPP/CH2M - Nuclear Waste Process Ops	2005	Field Work 5 ea. Operators	7T300		EA00	2	6,192.00	HRS	261,054.70
TT28305CA6	4	LT05B	RPP/CH2M - Health Physics Techs	2005	Field Work 2 ea. HPTs	7T300		EA00	2	2,478.00	HRS	98,401.38
TT28305CA6	4	LT06B	RPP/CH2M - In Health/Safety Tech	2005	Field Work 1 ea.	7T300		EA00	2	1,239.00	HRS	49,374.15
TT28305CA6	5	LE13E	RPP/CH2M - Other Engineers	2005	Field Work 1 ea. COG Engineer	7T300		EA00	2	978.00	HRS	60,724.02
TT28305CA6	5	LM01E	RPP/CH2M - First Line Supervisors	2005	Field Work 1 ea. Ops PIC	7T300		EA00	2	978.00	HRS	46,034.46
TT28305CA6	5	LR05B	RPP/CH2M - Nuclear Waste Process Ops	2005	Field Work 2 ea. Operators	7T300		EA00	2	1,956.00	HRS	82,464.96
TT28305CA6	5	LT05B	RPP/CH2M - Health Physics Techs	2005	Field Work 1 ea. HPT	7T300		EA00	2	978.00	HRS	38,836.38

Cost Estimating Input Sheet

Task Title:	Operations	Revision Number:	b
Sched Act Id:	07.12.01	WBS Number:	A5.02.01.04.07.12
Activity Owner:	SST Retrieval	PBS Number:	
Prepared By:	JR Biggs/AREngelman		

7.0 Notes:

1) Due to 24/7 schedule, estimates have been adjusted with a 1.5 multiplier to account for overtime coverage and required training as well as to account for unexpected occurances such as weather and resource availability. This factor was derived as follows:

-20% weather/resource avaliability IS historical factor
-15% training [7% - maintain qualifications to enter farm ; 5-7% maintain certifications depending on how many certifications; 1-3% allowance for all other] (data provided by Training organization]
-15% - turnover and vacation overtime coverage based on historical

Cost Estimating Input Sheet

Task Title:	Preventive/Corrective Maintenance	Revision Number:	b
Sched Act Id:	07.12.02	WBS Number:	A5.02.01.04.07.12
Activity Owner:	SSt Retrieval	PBS Number:	
Prepared By:	JR Biggs/AREngelman		

1.0 Scope Description:

This task includes resources to for corrective and preventive maintenance during operation of the S-112 Saltcake Dissolution System. It is assumed that there are (3)Tank Intrusive and (5)Ex-Tank maintenance activities each with one day prep and two day durations and a Senior Supervisory Watch is required. Resources for the applicable number of activities have been rolled up into each of the following sub tasks:

1) In-Tank Repairs
2) Ex-Tank Repairs
K) Work planning for this maintenance*

* Requires JRG Review

The Process for Work Package preparation will be in accordance with HNF-IP-0842, Volume 5, section 7.1.

Work Packages are prepared to outline the specific work steps required to assure successful execution of the work within the boundaries of the applicable requirements. The work package preparation process includes:

- A walkdown of the facility/area will be performed to identify the physical condition of the work area.
- Identification of detailed work steps, including Quality Control inspection points and Radiological hold points.
- Identification of re-test requirements.
- Identification of requirements, development of minor field work permits and establishment of energy control barriers.
- Obtain management and oversight review and approval.

Note: In the course of planning this work administrative activities will be performed wherein existing drawings and Engineering Change Notices (ECNs) will be pulled and inspected for previous Tank Farm / equipment modifications. Management review and approval must be obtained before proceeding with the work in the Tank Farm. Whenever practical lessons learned from similar activities will be applied.

Note: Planning will also identify the closeout package content which can include generation of updated drawings and ECNs to reflect the change in equipment configuration. This work scope includes only the identification of the ECN(s).

2.0 Estimating Assumptions and Exclusions:

A - Current standard practices for rad con and industrial heatlth & safety remains unchanged
A - All work will be accomplished by personnel who are familiar with AW Farm systems and equipment.
A - A COG Engineer dedicated to the installation will be provided.
A - Pit entries will be required.
A - Major events such as: radiation release, exhauster shut down or ammonia gas release are not anticipated.

3.0 Basis of Estimate:

Estimates are based on historical experince for past tank farm work in the interim stabilization program. Where applicable Lessons Learned and actual costs from field installations have been incorporated in to estimates and planning.

4.0 Estimate Stage and Method:

Preliminary/Analogy

Cost Estimating Input Sheet

Task Title:	Preventive/Corrective Maintenance	Revision Number:	b
Sched Act Id:	07.12.02	WBS Number:	A5.02.01.04.07.12
Activity Owner:	SSt Retrieval	PBS Number:	
Prepared By:	JR Biggs/AREngelman		

5.0 Legal Drivers/Reference Documents:

Tri-Party Agreement Milestone M-45-03C, "Complete Full Scale Saltcake Waste Retrieval Technology Demonstration at S-112"
DOE Order 413.3, Program and Project Management for the Acquisition of Capital Assets,

RPP-7526, Preliminary Engineering Report for the 241-S-112 Retrieval System

RPP-8791, PRELIMINARY PROJECT EXECUTION PLAN FOR TANK 241-S-112 SALTCAKE WASTE RETRIEVAL TECHNOLOGY DEMONSTRATION

RPP-7825, Single-Shell Tank S-112 Full Scale Saltcake Waste Retrieval technology Demonstration Functions and Requirements

Cost Estimating Input Sheet

Task Title:	Preventive/Corrective Maintenance	Revision Number:	b
Sched Act Id:	07.12.02	WBS Number:	A5.02.01.04.07.12
Activity Owner:	SSt Retrieval	PBS Number:	
Prepared By:	JR Biggs/AREngelman		

P3 Activity	Sub Task	P3 Res Code	ResourceType	Fiscal Year	SubtaskDescription	Org Code	Seq Num	COA	Note Ref	Budget Qty	Qty Type	Total Qty
TT28305CA6	1A	10L	RPP/CH2M Material & Equipment	2005	Material & Consumables	7T300		FA20	1	8.00	$K	8,000.00
TT28305CA6	1A	3PL	RPP/CH2M PHMC Support to RPP	2005	Stage equip - Crane (3 @ 1 day/each)	7T300		FA20	2,3	19.40	$K	19,400.00
TT28305CA6	1A	LM01E	RPP/CH2M - First Line Supervisors	2005	Field work, 1 ea. Ops. PIC (3 @ 8 hrs/ea)	7T300		FA20	2	29.00	HRS	1,365.03
TT28305CA6	1A	LT05B	RPP/CH2M - Health Physics Techs	2005	Field work, 2 ea. HPTs (3 @ 8 hrs/ea)	7T300		FA20	2	58.00	HRS	2,303.18
TT28305CA6	1B	3PL	RPP/CH2M PHMC Support to RPP	2005	Install equip - Crane (3 @ 2 days/ea)	7T300		FA20	2,3	38.90	$K	38,900.00
TT28305CA6	1B	LC02B	RPP/CH2M - Electricians	2005	Field work, 2 ea. Electricians (3 @ 16/hr ea)	7T300		FA20	2	115.00	HRS	4,836.90
TT28305CA6	1B	LC08B	RPP/CH2M - Plumbers & Pipefitters	2005	Field work, 2 ea. Pipefitters (3 @ 16 hr/ea)	7T300		FA20	2	115.00	HRS	4,544.80
TT28305CA6	1B	LE11E	RPP/CH2M - Quality Control Engrs	2005	Field work, 1 ea. Quality Control (3 @ 16 hr/ea)	7T300		FA20	2	58.00	HRS	2,964.96
TT28305CA6	1B	LE13E	RPP/CH2M - Other Engineers	2005	Field work, 1 ea. COG Engineer (3 @ 16 hr/ea)	7T300		FA20	2	58.00	HRS	3,601.22
TT28305CA6	1C	LC02B	RPP/CH2M - Electricians	2005	Close out Work Package (3 @ 4 hrs/ea.)	7T300		FA20		8.00	HRS	336.48
TT28305CA6	1C	LC08B	RPP/CH2M - Plumbers & Pipefitters	2005	Close out Work Package (3 @ 4 hrs/ea)	7T300		FA20		8.00	HRS	316.16
TT28305CA6	1C	LE13E	RPP/CH2M - Other Engineers	2005	Close out Work Package (3 @ 12hr/ea)	7T300		FA20		24.00	HRS	1,490.16
TT28305CA6	1C	LM01E	RPP/CH2M - First Line Supervisors	2005	Close out Work Package (3 @ 4 hr/ea)	7T300		FA20		8.00	HRS	376.56
TT28305CA6	1C	LM01E	RPP/CH2M - First Line Supervisors	2005	Field Work - 1 ea. HPT Supervisor (3 @ 16 hr/ea)	7T300		FA20	2	58.00	HRS	2,730.06
TT28305CA6	1C	LM01E	RPP/CH2M - First Line Supervisors	2005	Field work, 2 ea. Ops. PIC (3 @ 16 hr/ea)	7T300		FA20	2	115.00	HRS	5,413.05
TT28305CA6	1C	LM03E	RPP/CH2M - Project & Program Mgrs	2005	Senior Supervisory Watch (3 @ 16 hr/ea)	7T300		FA20	2	58.00	HRS	3,999.10
TT28305CA6	1C	LR05B	RPP/CH2M - Nuclear Waste Process Ops	2005	Field work, 8 ea. Operators (3@ 16hr/ea)	7T300		FA20	2	460.00	HRS	19,393.60
TT28305CA6	1C	LT05B	RPP/CH2M - Health Physics Techs	2005	Field work, 4 ea. HPTs (3 @ 16 hr/ea)	7T300		FA20	2	230.00	HRS	9,133.30
TT28305CA6	1C	LT06B	RPP/CH2M - In Health/Safety Tech	2005	Field Work - 1 ea. (3 @ 16 hr/ea)	7T300		FA20	2	58.00	HRS	2,311.30
TT28305CA6	1D	98L	RPP/CH2M Cogema	2005	Close out Work Package (3 @ 20hr/ea. @ $83/hr)	7T300		FA20		5.00	$K	5,000.00
TT28305CA6	1D	LM01E	RPP/CH2M - First Line Supervisors	2005	Close out Work Package (3 @ 12hr/ea)	7T300		FA20		36.00	HRS	1,694.52
TT28305CA6	1D	LP08E	RPP/CH2M - Health Physicists	2005	Close out Work Package (3 @ 12 hr/ea)	7T300		FA20		36.00	HRS	1,799.64
TT28305CA6	1D	LR05B	RPP/CH2M - Nuclear Waste Process Ops	2005	Close out Work Package (3 @ 8 hr/ea)	7T300		FA20		24.00	HRS	1,011.84
TT28305CA6	1D	LT05B	RPP/CH2M - Health Physics Techs	2005	Close out Work Package (3 @ 8hr/ea)	7T300		FA20		24.00	HRS	953.04
TT28305CA6	2A	10L	RPP/CH2M Material & Equipment	2005	Material & Consumables	7T300		FA20	1	14.00	$K	14,000.00
TT28305CA6	2A	3PL	RPP/CH2M PHMC Support to RPP	2005	Stage equip - Crane (5 @ 1day/ea)	7T300		FA20	3	32.40	$K	32,400.00

Cost Estimating Input Sheet

Task Title:	Preventive/Corrective Maintenance	Revision Number:	b
Sched Act Id:	07.12.02	WBS Number:	A5.02.01.04.07.12
Activity Owner:	SSt Retrieval	PBS Number:	
Prepared By:	JR Biggs/AREngelman		

P3 Activity	Sub Task	P3 Res Code	ResourceType	Fiscal Year	SubtaskDescription	Org Code	Seq Num	COA	Note Ref	Budget Qty	Qty Type	Total Qty
TT28305CA6	2A	LE13E	RPP/CH2M - Other Engineers	2005	Field work, 1 ea. COG Engineer (5 @ 8 hr/ea)	7T300		FA20	2	48.00	HRS	2,980.32
TT28305CA6	2A	LM01E	RPP/CH2M - First Line Supervisors	2005	Field work, 1 ea. Ops. PIC (5 @ 8 hr/ea)	7T300		FA20	2	48.00	HRS	2,259.36
TT28305CA6	2A	LR05B	RPP/CH2M - Nuclear Waste Process Ops	2005	Field work, 4 ea. Operators (5 @ 8 hr/ea)	7T300		FA20	2	192.00	HRS	8,094.72
TT28305CA6	2A	LT05B	RPP/CH2M - Health Physics Techs	2005	Field work, 2 ea. HPTs (5 @ 8 hr/ea)	7T300		FA20	2	96.00	HRS	3,812.16
TT28305CA6	2C	3PL	RPP/CH2M PHMC Support to RPP	2005	Install equip - Crane (5 @ 2day/ea)	7T300		FA20	2,3	64.80	$K	64,800.00
TT28305CA6	2C	LC02B	RPP/CH2M - Electricians	2005	Field work, 2 ea. Electricians (5 @ 16hr/ea)	7T300		FA20	2	192.00	HRS	8,075.52
TT28305CA6	2C	LC08B	RPP/CH2M - Plumbers & Pipefitters	2005	Field work, 2 ea. Pipefitters (5 @ 16hr/ea)	7T300		FA20	2	192.00	HRS	7,587.84
TT28305CA6	2C	LE11E	RPP/CH2M - Quality Control Engrs	2005	Field work, 1 ea. Quality Control (5 @ 16 hr/ea)	7T300		FA20	2	96.00	HRS	4,907.52
TT28305CA6	2C	LE13E	RPP/CH2M - Other Engineers	2005	Field work, 1 ea. COG Engineer (5 @ 16 hr/ea)	7T300		FA20	2	96.00	HRS	5,960.64
TT28305CA6	2C	LM01E	RPP/CH2M - First Line Supervisors	2005	Field Work - 1 ea. HPT Supervisor (5 @ 16 hr/ea)	7T300		FA20	2	96.00	HRS	4,518.72
TT28305CA6	2C	LM01E	RPP/CH2M - First Line Supervisors	2005	Field work, 2 ea. Ops. PIC (5 @ 16 hr/ea)	7T300		FA20	2	115.00	HRS	5,413.05
TT28305CA6	2C	LM03E	RPP/CH2M - Project & Program Mgrs	2005	Senior Supervisory Watch (5 @ 16 hr/ea)	7T300		FA20	2	96.00	HRS	6,619.20
TT28305CA6	2C	LR05B	RPP/CH2M - Nuclear Waste Process Ops	2005	Field work, 5 ea. Operators (5 @ 16 hr/ea)	7T300		FA20	2	480.00	HRS	20,236.80
TT28305CA6	2C	LT05B	RPP/CH2M - Health Physics Techs	2005	Field work, 3 ea. HPTs (5 @ 16 hr/ea)	7T300		FA20	2	288.00	HRS	11,436.48
TT28305CA6	2C	LT06B	RPP/CH2M - In Health/Safety Tech	2005	Field Work - 1 ea. (5 @ 16 hr/ea)	7T300		FA20	2	96.00	HRS	3,825.60
TT28305CA6	2D	98L	RPP/CH2M Cogema	2005	Close out Work Package (5 @ 20 hr/ea @ $83/hr)	7T300		FA20		8.30	$K	8,300.00
TT28305CA6	2D	LC02B	RPP/CH2M - Electricians	2005	Close out Work Package (5 @ 4hr/ea)	7T300		FA20		20.00	HRS	841.20
TT28305CA6	2D	LC08B	RPP/CH2M - Plumbers & Pipefitters	2005	Close out Work Package (5 @ 4 hrs/ea)	7T300		FA20		20.00	HRS	790.40
TT28305CA6	2D	LE13E	RPP/CH2M - Other Engineers	2005	Close out Work Package (5 @ 8hr/ea)	7T300		FA20		40.00	HRS	2,483.60
TT28305CA6	2D	LM01E	RPP/CH2M - First Line Supervisors	2005	Close out Work Package (5 @ 8 hr/ea)	7T300		FA20		40.00	HRS	1,882.80
TT28305CA6	2D	LM01E	RPP/CH2M - First Line Supervisors	2005	Close out Work Package(5 @ 4 hr/ea)	7T300		FA20		20.00	HRS	941.40
TT28305CA6	2D	LP08E	RPP/CH2M - Health Physicists	2005	Close out Work Package (5 @ 8 hr/ea)	7T300		FA20		40.00	HRS	1,999.60
TT28305CA6	2D	LR05B	RPP/CH2M - Nuclear Waste Process Ops	2005	Close out Work Package (5 @ 8 hr/ea)	7T300		FA20		40.00	HRS	1,686.40
TT28305CA6	2D	LT05B	RPP/CH2M - Health Physics Techs	2005	Close out Work Package (5 @ 8 hr/ea)	7T300		FA20		40.00	HRS	1,588.40
TT28305CA6	K1	98L	RPP/CH2M Cogema	2005	Work Package and EWP Review Non-Intrusive Maintenance (5) - 200 hr @	7T300		FA20		16.60	$K	16,600.00
TT28305CA6	K1	LC08B	RPP/CH2M - Plumbers & Pipefitters	2005	Work Package and EWP Review Non-Intrusive Maintenance (5)	7T300		FA20		40.00	HRS	1,580.80

Cost Estimating Input Sheet

Task Title:	Preventive/Corrective Maintenance	Revision Number:	b
Sched Act Id:	07.12.02	WBS Number:	A5.02.01.04.07.12
Activity Owner:	SSt Retrieval	PBS Number:	
Prepared By:	JR Biggs/AREngelman		

P3 Activity	Sub Task	P3 Res Code	ResourceType	Fiscal Year	SubtaskDescription	Org Code	Seq Num	COA	Note Ref	Budget Qty	Qty Type	Total Qty
TT28305CA6	K1	LE05E	RPP/CH2M - Environmental Engineers	2005	Work Package and EWP Review Non-Intrusive Maintenance (5)	7T300		FA20		40.00	HRS	1,952.80
TT28305CA6	K1	LE11E	RPP/CH2M - Quality Control Engrs	2005	Work Package and EWP Review Non-Intrusive Maintenance (5)	7T300		FA20		40.00	HRS	2,044.80
TT28305CA6	K1	LE12E	RPP/CH2M - Safety Engineers	2005	Work Package and EWP Review Non-Intrusive Maintenance (5)	7T300		FA20		40.00	HRS	1,958.00
TT28305CA6	K1	LE13E	RPP/CH2M - Other Engineers	2005	Work Package and EWP Review Non-Intrusive Maintenance (5)	7T300		FA20		40.00	HRS	2,483.60
TT28305CA6	K1	LG03B	RPP/CH2M - Office Clks(Specialized)	2005	Work Package and EWP Review Non-Intrusive Maintenance (5)	7T300		FA20		27.00	HRS	900.18
TT28305CA6	K1	LM01E	RPP/CH2M - First Line Supervisors	2005	Work Package and EWP Review Non-Intrusive Maintenance (5)	7T300		FA20		40.00	HRS	1,882.80
TT28305CA6	K1	LM02E	RPP/CH2M - Managers & Executives	2005	Work Package and EWP Review Non-Intrusive Maintenance (5)	7T300		FA20		40.00	HRS	2,759.60
TT28305CA6	K1	LP08E	RPP/CH2M - Health Physicists	2005	Work Package and EWP Review Non-Intrusive Maintenance (5)	7T300		FA20		27.00	HRS	1,349.73
TT28305CA6	K1	LR05B	RPP/CH2M - Nuclear Waste Process Ops	2005	Work Package and EWP Review Non-Intrusive Maintenance (5)	7T300		FA20		40.00	HRS	1,686.40
TT28305CA6	K2	98L	RPP/CH2M Cogema	2005	Work Package and EWP Review Intrusive Maintenance (3) - 120 hr @	7T300		FA20		10.00	$K	10,000.00
TT28305CA6	K2	LC08B	RPP/CH2M - Plumbers & Pipefitters	2005	Work Package and EWP Review Intrusive Maintenance (3)	7T300		FA20		24.00	HRS	948.48
TT28305CA6	K2	LE05E	RPP/CH2M - Environmental Engineers	2005	Work Package and EWP Review Intrusive Maintenance (3)	7T300		FA20		24.00	HRS	1,171.68
TT28305CA6	K2	LE11E	RPP/CH2M - Quality Control Engrs	2005	Work Package and EWP Review Intrusive Maintenance (3)	7T300		FA20		24.00	HRS	1,226.88
TT28305CA6	K2	LE12E	RPP/CH2M - Safety Engineers	2005	Work Package and EWP Review Intrusive Maintenance (3)	7T300		FA20		24.00	HRS	1,174.80
TT28305CA6	K2	LE13E	RPP/CH2M - Other Engineers	2005	Work Package and EWP Review Intrusive Maintenance (3)	7T300		FA20		24.00	HRS	1,490.16
TT28305CA6	K2	LG03B	RPP/CH2M - Office Clks(Specialized)	2005	Work Package and EWP Review Intrusive Maintenance (3)	7T300		FA20		24.00	HRS	800.16
TT28305CA6	K2	LM01E	RPP/CH2M - First Line Supervisors	2005	Work Package and EWP Review Intrusive Maintenance (3)	7T300		FA20		24.00	HRS	1,129.68
TT28305CA6	K2	LM01E	RPP/CH2M - First Line Supervisors	2005	Work Package JRG Review (3)	7T300		FA20		24.00	HRS	1,129.68
TT28305CA6	K2	LM02E	RPP/CH2M - Managers & Executives	2005	Work Package JRG Review (3)	7T300		FA20		24.00	HRS	1,655.76
TT28305CA6	K2	LM02E	RPP/CH2M - Managers & Executives	2005	Work Package and EWP Review Intrusive Maintenance (3)	7T300		FA20		12.00	HRS	827.88
TT28305CA6	K2	LP08E	RPP/CH2M - Health Physicists	2005	Work Package and EWP Review Intrusive Maintenance(3)	7T300		FA20		24.00	HRS	1,199.76
TT28305CA6	K2	LP08E	RPP/CH2M - Health Physicists	2005	Work Package JRG Review (3)	7T300		FA20		24.00	HRS	1,199.76
TT28305CA6	K2	LR05B	RPP/CH2M - Nuclear Waste Process Ops	2005	Work Package and EWP Review Intrusive Maintenance (3)	7T300		FA20		24.00	HRS	1,011.84
TT28305CA6	K2	LT05B	RPP/CH2M - Health Physics Techs	2005	Work Package and EWP Review Intrusive Maintenance (3)	7T300		FA20		24.00	HRS	953.04

Cost Estimating Input Sheet

Task Title:	Preventive/Corrective Maintenance	Revision Number:	b
Sched Act Id:	07.12.02	WBS Number:	A5.02.01.04.07.12
Activity Owner:	SSt Retrieval	PBS Number:	
Prepared By:	JR Biggs/AREngelman		

7.0 Notes:

1. Consumables such as plastic sheeting, tape, containments, and waste bags are included in this figure. Small tools and PPE are provided by Operations and are excluded from this estimate.

2. All labor hours have been increased by 20% to account for unexpected occurances such as weather and resource availability, based on Interim Stabilization experience. Hours include pre and post job activity including pre-job briefings and dress/undress as applicable.

3. The crane crew consists of the following personnel and equipment:
Rates are based on the FY01 published site indirect pool rates
1 - Management PIC (Person in Charge) ($130/hr)
1 - Teamster - Heavy Load Truck Driver ($81/hr)
1 - Operator - Crane Operator ($81/hr)
4 - Ironworker/Riggers - Rig pump for lifting, flag crane operator, etc ($324/hr)
1 - 33T Crane/truck/trailer - ($500/day or $55.56/hr.)
Therefore:
The total Crane and Rigging Crew Hourly Rate = $672/hr rounded
Daily rate = 8 hrs X $672 = $5,376

Cost Estimating Input Sheet

Task Title:	S112 Retrieval Demonstration Evaluation	Revision Number:	b
Sched Act Id:	07.12.03	WBS Number:	A5.02.01.04.07.12
Activity Owner:	SST Retrieval	PBS Number:	
Prepared By:	JRBiggs/AREngelman		

1.0 Scope Description:

This activity includes the following tasks:

A. Retrieval Performance Verification - sample planning, sample operations (acquiring sample), analysis, and reporting
B. Performance Assessment/Test Data Analysis and documentation

2.0 Estimating Assumptions and Exclusions:

A - Sampling requirements will be minimal

3.0 Basis of Estimate:

A. Retrieval Performance Verification -
Sample planning and operations estimates- based on current estimates from the Characterization organization
Sampling analysis and reporting estimates- based on estimates from 222S/WSCF Laboratories Client Services and engineering judgement
D7. -Evaluation Report: Prepare a comprehensive PNNL report on technical aspects of the demonstration; contribute to CHG report on evaluation .7 FTE (FY05)

B. Performance Assessment/Test Data Analysis and documentation - based on tank farm experience including reports for SY-101.

4.0 Estimate Stage and Method:

Preliminary/Analogy

5.0 Legal Drivers/Reference Documents:

Tri-Party Agreement Milestone M-45-03C, "Complete Full Scale Saltcake Waste Retrieval Technology Demonstration at S-112"
DOE Order 413.3, Program and Project Management for the Acquisition of Capital Assets,

RPP-7526, Preliminary Engineering Report for the 241-S-112 Retrieval System

RPP-8791, PRELIMINARY PROJECT EXECUTION PLAN FOR TANK 241-S-112 SALTCAKE WASTE RETRIEVAL TECHNOLOGY DEMONSTRATION

RPP-7825, Single-Shell Tank S-112 Full Scale Saltcake Waste Retrieval technology Demonstration Functions and Requirements

Task Title:	S112 Retrieval Demonstration Evaluation	Revision Number:	b
Sched Act Id:	07.12.03	WBS Number:	A5.02.01.04.07.12
Activity Owner:	SST Retrieval	PBS Number:	
Prepared By:	JRBiggs/AREngelman		

P3 Activity	Sub Task	P3 Res Code	ResourceType	Fiscal Year	SubtaskDescription	Org Code	Seq Num	COA	Note Ref	Budget Qty	Qty Type	Total Qty
TT28305CA6	A1	10L	RPP/CH2M Material & Equipment	2005	TSAP/Planning/Materials (1 liter)	7T300		EA00		0.20	$K	200.00
TT28305CA6	A1	1PL	RPP/CH2M P Card Purchases	2005	TSAP/Planning/Materials (1 liter)	7T300		EA00		3.00	$K	3,000.00
TT28305CA6	A1	21L	RPP/CH2M PO Contracts	2005	TSAP/Planning/Materials (1 liter)	7T300		EA00		0.20	$K	200.00
TT28305CA6	A1	3DL	RPP/CH2M Other Hanford Contractors	2005	TSAP/Planning/Materials (1 liter)	7T300		EA00		6.00	$K	6,000.00
TT28305CA6	A1	3PL	RPP/CH2M PHMC Support to RPP	2005	TSAP/Planning/Materials (1 liter)	7T300		EA00		4.00	$K	4,000.00
TT28305CA6	A1	93L	RPP/CH2M WMNW	2005	TSAP/Planning/Materials (1 liter)	7T300		EA00		1.00	$K	1,000.00
TT28305CA6	A1	LC01B	RPP/CH2M - Carpenters	2005	TSAP/Planning/Materials (1 liter)	7T300		EA00		2.00	HRS	77.52
TT28305CA6	A1	LC02B	RPP/CH2M - Electricians	2005	TSAP/Planning/Materials (1 liter)	7T300		EA00		30.00	HRS	1,261.80
TT28305CA6	A1	LC06B	RPP/CH2M - Millwrights	2005	TSAP/Planning/Materials (1 liter)	7T300		EA00		8.00	HRS	316.16
TT28305CA6	A1	LC07B	RPP/CH2M - Painters	2005	TSAP/Planning/Materials (1 liter)	7T300		EA00		5.00	HRS	195.80
TT28305CA6	A1	LC08B	RPP/CH2M - Plumbers & Pipefitters	2005	TSAP/Planning/Materials (1 liter)	7T300		EA00		23.00	HRS	908.96
TT28305CA6	A1	LC12B	RPP/CH2M - Other Crafts	2005	TSAP/Planning/Materials (1 liter)	7T300		EA00		1.00	HRS	39.52
TT28305CA6	A1	LE01E	RPP/CH2M - Chemical Engineers	2005	TSAP/Planning/Materials (1 liter)	7T300		EA00		180.00	HRS	10,202.40
TT28305CA6	A1	LE07E	RPP/CH2M - Mechanical Engineers	2005	TSAP/Planning/Materials (1 liter)	7T300		EA00		50.00	HRS	2,595.00
TT28305CA6	A1	LE10E	RPP/CH2M - Plant Engineers	2005	TSAP/Planning/Materials (1 liter)	7T300		EA00		32.00	HRS	1,337.60
TT28305CA6	A1	LE11E	RPP/CH2M - Quality Control Engrs	2005	TSAP/Planning/Materials (1 liter)	7T300		EA00		2.00	HRS	102.24
TT28305CA6	A1	LE12E	RPP/CH2M - Safety Engineers	2005	TSAP/Planning/Materials (1 liter)	7T300		EA00		30.00	HRS	1,468.50
TT28305CA6	A1	LE13E	RPP/CH2M - Other Engineers	2005	TSAP/Planning/Materials (1 liter)	7T300		EA00		3.00	HRS	186.27
TT28305CA6	A1	LG01E	RPP/CH2M - Administrative Assistants	2005	TSAP/Planning/Materials (1 liter)	7T300		EA00		3.00	HRS	92.49
TT28305CA6	A1	LG03B	RPP/CH2M - Office Clks(Specialized)	2005	TSAP/Planning/Materials (1 liter)	7T300		EA00		52.00	HRS	1,733.68
TT28305CA6	A1	LP07E	RPP/CH2M - Planner/Sched/Estimators	2005	TSAP/Planning/Materials (1 liter)	7T300		EA00		100.00	HRS	4,340.00
TT28305CA6	A1	LP08E	RPP/CH2M - Health Physicists	2005	TSAP/Planning/Materials (1 liter)	7T300		EA00		80.00	HRS	3,999.20
TT28305CA6	A1	LP15E	RPP/CH2M - Trainers & Instructors	2005	TSAP/Planning/Materials (1 liter)	7T300		EA00		10.00	HRS	419.60
TT28305CA6	A1	LP16E	RPP/CH2M - Technical Writers/Editors	2005	TSAP/Planning/Materials (1 liter)	7T300		EA00		8.00	HRS	337.12
TT28305CA6	A1	LP17E	RPP/CH2M - Other Professionals	2005	TSAP/Planning/Materials (1 liter)	7T300		EA00		1.00	HRS	33.40
TT28305CA6	A1	LR05B	RPP/CH2M - Nuclear Waste Process Ops	2005	Acqiure Grab sample (assume 1 liter)	7T300		EA00		1,600.00	HRS	67,456.00

Cost Estimating Input Sheet

Task Title:	S112 Retrieval Demonstration Evaluation	Revision Number:	b
Sched Act Id:	07.12.03	WBS Number:	A5.02.01.04.07.12
Activity Owner:	SST Retrieval	PBS Number:	
Prepared By:	JRBiggs/AREngelman		

P3 Activity	Sub Task	P3 Res Code	ResourceType	Fiscal Year	SubtaskDescription	Org Code	Seq Num	COA	Note Ref	Budget Qty	Qty Type	Total Qty
TT28305CA6	A1	LS01E	RPP/CH2M - Chemists	2005	TSAP/Planning/Materials (1 liter)	7T300		EA00		10.00	HRS	545.40
TT28305CA6	A1	LS02E	RPP/CH2M - Environmental Scientists	2005	TSAP/Planning/Materials (1 liter)	7T300		EA00		1.00	HRS	49.59
TT28305CA6	A1	LS03E	RPP/CH2M - Geolog/Geophysic/Hydro	2005	TSAP/Planning/Materials (1 liter)	7T300		EA00		14.00	HRS	845.88
TT28305CA6	A2	4VL	RPP/CH2M Fleet	2005	Acquire Grab Sample (1 liter)	7T300		EA00		3.00	$K	3,000.00
TT28305CA6	A2	LL07B	RPP/CH2M - Light Vehicle Drivers	2005	Acquire Grab Sample (1 liter)	7T300		EA00		1.00	HRS	32.06
TT28305CA6	A2	LM01E	RPP/CH2M - First Line Supervisors	2005	Acquire Grab Sample (1 liter)	7T300		EA00		210.00	HRS	9,884.70
TT28305CA6	A2	LM02E	RPP/CH2M - Managers & Executives	2005	Acquire Grab Sample (1 liter)	7T300		EA00		110.00	HRS	7,588.90
TT28305CA6	A2	LP09E	RPP/CH2M - In Hygienists	2005	Acquire Grab Sample (1 liter)	7T300		EA00		20.00	HRS	932.60
TT28305CA6	A2	LR05B	RPP/CH2M - Nuclear Waste Process Ops	2005	Acquire Grab Sample (1 liter)	7T300		EA00		570.00	HRS	24,031.20
TT28305CA6	A2	LT05B	RPP/CH2M - Health Physics Techs	2005	Acquire Grab Sample (1 liter)	7T300		EA00		175.00	HRS	6,949.25
TT28305CA6	A2	LT06B	RPP/CH2M - In Health/Safety Tech	2005	Acquire Grab Sample (1 liter)	7T300		EA00		50.00	HRS	1,992.50
TT28305CA6	A2	LT07B	RPP/CH2M - Instrument & Control Techs	2005	Acquire Grab Sample (1 liter)	7T300		EA00		2.00	HRS	84.34
TT28305CA6	A2	LT11B	RPP/CH2M - Other Technicians	2005	Acquire Grab Sample (1 liter)	7T300		EA00		5.00	HRS	165.80
TT28305CA6	A3	3PL	RPP/CH2M PHMC Support to RPP	2005	Sample Analysis and Data Reporting	7T300		EA00		250.00	$K	250,000.00
TT28305CA6	B1	LE01E	RPP/CH2M - Chemical Engineers	2005	Prepare dissolution test report/review/approve/issue	7T300		EA00		800.00	HRS	45,344.00
TT28305CA6	B1	LE01E	RPP/CH2M - Chemical Engineers	2005	Evaluate dissolution test results	7T300		EA00		480.00	HRS	27,206.40
TT28305CA6	B1	LE13E	RPP/CH2M - Other Engineers	2005	Prepare dissolution test report/review/approve/issue	7T300		EA00		360.00	HRS	22,352.40
TT28305CA6	B1	LM03E	RPP/CH2M - Project & Program Mgrs	2005	Conduct post operations lessons learned (Ops/Radcon mgmt.) (1 day	7T300		EA00		16.00	HRS	1,103.20
TT28305CA6	B2	LE08E	RPP/CH2M - Nuclear Engineers	2005	Conduct post operations lessons learned (1 day session)	7T300		EA00		8.00	HRS	509.76
TT28305CA6	B2	LE11E	RPP/CH2M - Quality Control Engrs	2005	Conduct post operations lessons learned (1 day session)	7T300		EA00		8.00	HRS	408.96
TT28305CA6	B2	LE13E	RPP/CH2M - Other Engineers	2005	Conduct post operations lessons learned (1 day session)	7T300		EA00		8.00	HRS	496.72
TT28305CA6	B2	LP09E	RPP/CH2M - In Hygienists	2005	Conduct post operations lessons learned (1 day session)	7T300		EA00		8.00	HRS	373.04
TT28305CA6	B2	LR05B	RPP/CH2M - Nuclear Waste Process Ops	2005	Conduct post operations lessons learned (1 day session) 2 NPOs	7T300		EA00		16.00	HRS	674.56
TT28305CA6	B2	LT05B	RPP/CH2M - Health Physics Techs	2005	Conduct post operations lessons learned (1 day session)	7T300		EA00		8.00	HRS	317.68
TT28305CA6	B3	LE13E	RPP/CH2M - Other Engineers	2005	Conduct post ops tech evaluation (4 day session)	7T300		EA00		32.00	HRS	1,986.88
TT28305CA6	B3	LM03E	RPP/CH2M - Project & Program Mgrs	2005	Conduct post ops tech evaluation(4 mgmt.) (4 day session)	7T300		EA00		128.00	HRS	8,825.60

Cost Estimating Input Sheet

Task Title:	S112 Retrieval Demonstration Evaluation	Revision Number:	b
Sched Act Id:	07.12.03	WBS Number:	A5.02.01.04.07.12
Activity Owner:	SST Retrieval	PBS Number:	
Prepared By:	JRBiggs/AREngelman		

P3 Activity	Sub Task	P3 Res Code	ResourceType	Fiscal Year	SubtaskDescription	Org Code	Seq Num	COA	Note Ref	Budget Qty	Qty Type	Total Qty
TT28305CA6	B3	LP09E	RPP/CH2M - In Hygienists	2005	Conduct post ops tech evaluation (4 day session)	7T300		EA00		32.00	HRS	1,492.16
TT28305CA6	B3	LR05B	RPP/CH2M - Nuclear Waste Process Ops	2005	Conduct post ops tech evaluation (4 day session)	7T300		EA00		32.00	HRS	1,349.12
TT28305CA6	B3	LT05B	RPP/CH2M - Health Physics Techs	2005	Conduct post ops tech evaluation (4 day session)	7T300		EA00		32.00	HRS	1,270.72
TT28305CA6	B4	LE08E	RPP/CH2M - Nuclear Engineers	2005	Prepare tech eval report and issue	7T300		EA00		50.00	HRS	3,186.00
TT28305CA6	B4	LE11E	RPP/CH2M - Quality Control Engrs	2005	Prepare tech eval report and issue	7T300		EA00		10.00	HRS	511.20
TT28305CA6	B4	LE13E	RPP/CH2M - Other Engineers	2005	Prepare tech eval report and issue	7T300		EA00		300.00	HRS	18,627.00
TT28305CA6	B4	LM03E	RPP/CH2M - Project & Program Mgrs	2005	Preparee tech eval report and issue(Ops/Radcon mgmt.)	7T300		EA00		40.00	HRS	2,758.00
TT28305CA6	D7	3DL	RPP/CH2M Other Hanford Contractors	2005	PNNL support .75 FTE 1356 hr @ $110/hr.	7T300		B000		149.20	$K	149,200.00

Task Title:	S112 Retrieval Demonstration Evaluation	Revision Number:	b
Sched Act Id:	07.12.03	WBS Number:	A5.02.01.04.07.12
Activity Owner:	SST Retrieval	PBS Number:	
Prepared By:	JRBiggs/AREngelman		

7.0 Notes:

Cost Estimating Input Sheet

Task Title:	Isolate/Post Disconnect/Remove Equipment	Revision Number:	b
Sched Act Id:	07.12.04	WBS Number:	A5.02.01.04.07.12
Activity Owner:	SST Retrieval	PBS Number:	
Prepared By:	JR Biggs/AREngelman		

1.0 Scope Description:

This activity includes the following tasks:

A1 Walkdown for In-Tank Video/Prepare Work Package
A2 Restore Riser/Perform In-Tank Video
A3 Evaluate InTank Videos
A4Equipment Removal Planning
A5 ECN preparation
A7 Disconnect equipment
A8Removal of retrieval equipment (including staging of equipment)
A9Dispose of equipment

2.0 Estimating Assumptions and Exclusions:

A - Equipment removed includes
-the Interim Stabilization equipment that must be removed for the S-112 Project operations and
- equipment that must be removed at the end of the project (all equipment installed by the S-112 Project)

3.0 Basis of Estimate:

Estimates are based on historical experience for past tank farm work in the interim stabilization program.

4.0 Estimate Stage and Method:

Preliminary/Analogy

5.0 Legal Drivers/Reference Documents:

Tri-Party Agreement Milestone M-45-03C, "Complete Full Scale Saltcake Waste Retrieval Technology Demonstration at S-112"
DOE Order 413.3, Program and Project Management for the Acquisition of Capital Assets,

RPP-7526, Preliminary Engineering Report for the 241-S-112 Retrieval System

RPP-8791, PRELIMINARY PROJECT EXECUTION PLAN FOR TANK 241-S-112 SALTCAKE WASTE RETRIEVAL TECHNOLOGY DEMONSTRATION

RPP-7825, Single-Shell Tank S-112 Full Scale Saltcake Waste Retrieval technology Demonstration Functions and Requirements

Cost Estimating Input Sheet

Task Title:	Isolate/Post Disconnect/Remove Equipment	Revision Number:	b
Sched Act Id:	07.12.04	WBS Number:	A5.02.01.04.07.12
Activity Owner:	SST Retrieval	PBS Number:	
Prepared By:	JR Biggs/AREngelman		

P3 Activity	Sub Task	P3 Res Code	ResourceType	Fiscal Year	SubtaskDescription	Org Code	Seq Num	COA	Note Ref	Budget Qty	Qty Type	Total Qty
TT28305CA6	A1	98L	RPP/CH2M Cogema	2005	Walkdown for In-Tank Video/Prep Work Pkg Planner 6hr @ $83/hr	7T300		GB00		0.50	$K	500.00
TT28305CA6	A1	LC08B	RPP/CH2M - Plumbers & Pipefitters	2005	Walkdown for In-Tank Video/Prep Work Pkg	7T300		GB00		4.00	HRS	158.08
TT28305CA6	A1	LE01E	RPP/CH2M - Chemical Engineers	2005	Walkdown for In-Tank Video/Prep Work Pkg	7T300		GB00		16.00	HRS	906.88
TT28305CA6	A1	LE05E	RPP/CH2M - Environmental Engineers	2005	Walkdown for In-Tank Video/Prep Work Pkg	7T300		GB00		4.00	HRS	195.28
TT28305CA6	A1	LE10E	RPP/CH2M - Plant Engineers	2005	Walkdown for In-Tank Video/Prep Work Pkg	7T300		GB00		8.00	HRS	334.40
TT28305CA6	A1	LE11E	RPP/CH2M - Quality Control Engrs	2005	Walkdown for In-Tank Video/Prep Work Pkg	7T300		GB00		2.00	HRS	102.24
TT28305CA6	A1	LE12E	RPP/CH2M - Safety Engineers	2005	Walkdown for In-Tank Video/Prep Work Pkg	7T300		GB00		6.00	HRS	293.70
TT28305CA6	A1	LM01E	RPP/CH2M - First Line Supervisors	2005	Walkdown for In-Tank Video/Prep Work Pkg	7T300		GB00		6.00	HRS	282.42
TT28305CA6	A1	LP08E	RPP/CH2M - Health Physicists	2005	Walkdown for In-Tank Video/Prep Work Pkg	7T300		GB00		8.00	HRS	399.92
TT28305CA6	A1	LR05B	RPP/CH2M - Nuclear Waste Process Ops	2005	Walkdown for In-Tank Video/Prep Work Pkg	7T300		GB00		4.00	HRS	168.64
TT28305CA6	A1	LT05B	RPP/CH2M - Health Physics Techs	2005	Walkdown for In-Tank Video/Prep Work Pkg	7T300		GB00		4.00	HRS	158.84
TT28305CA6	A2	10L	RPP/CH2M Material & Equipment	2005	Restore Riser/Perform In-Tank Video	7T300		GB00		1.00	$K	1,000.00
TT28305CA6	A2	LC02B	RPP/CH2M - Electricians	2005	Restore Riser/Perform In-Tank Video	7T300		GB00		8.00	HRS	336.48
TT28305CA6	A2	LC08B	RPP/CH2M - Plumbers & Pipefitters	2005	Restore Riser/Perform In-Tank Video	7T300		GB00		8.00	HRS	316.16
TT28305CA6	A2	LM01E	RPP/CH2M - First Line Supervisors	2005	Restore Riser/Perform In-Tank Video	7T300		GB00		8.00	HRS	376.56
TT28305CA6	A2	LM02E	RPP/CH2M - Managers & Executives	2005	Restore Riser/Perform In-Tank Video	7T300		GB00		8.00	HRS	551.92
TT28305CA6	A2	LR05B	RPP/CH2M - Nuclear Waste Process Ops	2005	Restore Riser/Perform In-Tank Video	7T300		GB00		8.00	HRS	337.28
TT28305CA6	A2	LT05B	RPP/CH2M - Health Physics Techs	2005	Restore Riser/Perform In-Tank Video	7T300		GB00		8.00	HRS	317.68
TT28305CA6	A3	LE01E	RPP/CH2M - Chemical Engineers	2005	Evaluate In-Tank Video	7T300		GB00		24.00	HRS	1,360.32
TT28305CA6	A3	LM01E	RPP/CH2M - First Line Supervisors	2005	Evaluate In-Tank Video	7T300		GB00		8.00	HRS	376.56
TT28305CA6	A4	98L	RPP/CH2M Cogema	2005	Equipment Removal Planning Planner 48hr @ $83/hr	7T300		GB00		4.00	$K	4,000.00
TT28305CA6	A4	LE05E	RPP/CH2M - Environmental Engineers	2005	Equipment Removal Planning	7T300		GB00		16.00	HRS	781.12
TT28305CA6	A4	LE10E	RPP/CH2M - Plant Engineers	2005	Equipment Removal Planning	7T300		GB00		16.00	HRS	668.80
TT28305CA6	A4	LE11E	RPP/CH2M - Quality Control Engrs	2005	Equipment Removal Planning	7T300		GB00		16.00	HRS	817.92
TT28305CA6	A4	LE12E	RPP/CH2M - Safety Engineers	2005	Equipment Removal Planning	7T300		GB00		16.00	HRS	783.20
TT28305CA6	A4	LG03B	RPP/CH2M - Office Clks(Specialized)	2005	Equipment Removal Planning	7T300		GB00		8.00	HRS	266.72

Cost Estimating Input Sheet

Task Title:	Isolate/Post Disconnect/Remove Equipment	Revision Number:	b
Sched Act Id:	07.12.04	WBS Number:	A5.02.01.04.07.12
Activity Owner:	SST Retrieval	PBS Number:	
Prepared By:	JR Biggs/AREngelman		

P3 Activity	Sub Task	P3 Res Code	ResourceType	Fiscal Year	SubtaskDescription	Org Code	Seq Num	COA	Note Ref	Budget Qty	Qty Type	Total Qty
TT28305CA6	A4	LM01E	RPP/CH2M - First Line Supervisors	2005	Equipment Removal Planning	7T300		GB00		16.00	HRS	753.12
TT28305CA6	A4	LM02E	RPP/CH2M - Managers & Executives	2005	Equipment Removal Planning	7T300		GB00		16.00	HRS	1,103.84
TT28305CA6	A4	LP08E	RPP/CH2M - Health Physicists	2005	Equipment Removal Planning	7T300		GB00		16.00	HRS	799.84
TT28305CA6	A4	LR05B	RPP/CH2M - Nuclear Waste Process Ops	2005	Equipment Removal Planning	7T300		GB00		16.00	HRS	674.56
TT28305CA6	A5	LC02B	RPP/CH2M - Electricians	2005	Prep/Appr Document & Update/Approve ECN	7T300		GB00		4.00	HRS	168.24
TT28305CA6	A5	LE01E	RPP/CH2M - Chemical Engineers	2005	Prep/Appr Document & Update/Approve ECN	7T300		GB00		16.00	HRS	906.88
TT28305CA6	A5	LE11E	RPP/CH2M - Quality Control Engrs	2005	Prep/Appr Document & Update/Approve ECN	7T300		GB00		24.00	HRS	1,226.88
TT28305CA6	A5	LE12E	RPP/CH2M - Safety Engineers	2005	Prep/Appr Document & Update/Approve ECN	7T300		GB00		12.00	HRS	587.40
TT28305CA6	A5	LE13E	RPP/CH2M - Other Engineers	2005	Prep/Appr Document & Update/Approve ECN	7T300		GB00		8.00	HRS	496.72
TT28305CA6	A5	LM01E	RPP/CH2M - First Line Supervisors	2005	Prep/Appr Document & Update/Approve ECN	7T300		GB00		4.00	HRS	188.28
TT28305CA6	A5	LP09E	RPP/CH2M - In Hygienists	2005	Prep/Appr Document & Update/Approve ECN	7T300		GB00		12.00	HRS	559.56
TT28305CA6	A5	LR05B	RPP/CH2M - Nuclear Waste Process Ops	2005	Prep/Appr Document & Update/Approve ECN	7T300		GB00		24.00	HRS	1,011.84
TT28305CA6	A5	LT05B	RPP/CH2M - Health Physics Techs	2005	Prep/Appr Document & Update/Approve ECN	7T300		GB00		18.00	HRS	714.78
TT28305CA6	A7	3PL	RPP/CH2M PHMC Support to RPP	2005	Disconnect/relocate equipment (5 days)	7T300		GB00	2,3	32.40	$K	32,400.00
TT28305CA6	A7	LC02B	RPP/CH2M - Electricians	2005	Disconnect/relocate equipment	7T300		GB00	2	48.00	HRS	2,018.88
TT28305CA6	A7	LC08B	RPP/CH2M - Plumbers & Pipefitters	2005	Disconnect/relocate equipment	7T300		GB00	2	48.00	HRS	1,896.96
TT28305CA6	A7	LE05E	RPP/CH2M - Environmental Engineers	2005	Disconnect/relocate equipment	7T300		GB00	2	48.00	HRS	2,343.36
TT28305CA6	A7	LE10E	RPP/CH2M - Plant Engineers	2005	Disconnect/relocate equipment	7T300		GB00	2	48.00	HRS	2,006.40
TT28305CA6	A7	LE11E	RPP/CH2M - Quality Control Engrs	2005	Disconnect/relocate equipment	7T300		GB00	2	24.00	HRS	1,226.88
TT28305CA6	A7	LE12E	RPP/CH2M - Safety Engineers	2005	Disconnect/relocate equipment	7T300		GB00	2	24.00	HRS	1,174.80
TT28305CA6	A7	LG03B	RPP/CH2M - Office Clks(Specialized)	2005	Disconnect/relocate equipment	7T300		GB00	2	24.00	HRS	800.16
TT28305CA6	A7	LM01E	RPP/CH2M - First Line Supervisors	2005	Disconnect/relocate equipment	7T300		GB00	2	96.00	HRS	4,518.72
TT28305CA6	A7	LP08E	RPP/CH2M - Health Physicists	2005	Disconnect/relocate equipment	7T300		GB00	2	24.00	HRS	1,199.76
TT28305CA6	A7	LR05B	RPP/CH2M - Nuclear Waste Process Ops	2005	Disconnect/relocate equipment (4 NPO)	7T300		GB00	2	192.00	HRS	8,094.72
TT28305CA6	A7	LT05B	RPP/CH2M - Health Physics Techs	2005	Disconnect/relocate equipment (2 HPT)	7T300		GB00	2	96.00	HRS	3,812.16
TT28305CA6	A7	LT07B	RPP/CH2M - Instrument & Control Techs	2005	Disconnect/relocate equipment	7T300		GB00	2	48.00	HRS	2,024.16

Cost Estimating Input Sheet

Task Title:	Isolate/Post Disconnect/Remove Equipment	Revision Number:	b
Sched Act Id:	07.12.04	WBS Number:	A5.02.01.04.07.12
Activity Owner:	SST Retrieval	PBS Number:	
Prepared By:	JR Biggs/AREngelman		

P3 Activity	Sub Task	P3 Res Code	ResourceType	Fiscal Year	SubtaskDescription	Org Code	Seq Num	COA	Note Ref	Budget Qty	Qty Type	Total Qty
TT28305CA6	A8	10L	RPP/CH2M Material & Equipment	2005	Consummables	7T300		GB00	1	15.00	$K	15,000.00
TT28305CA6	A8	3PL	RPP/CH2M PHMC Support to RPP	2005	Equipment Removal (5 days)	7T300		GB00	2,3	32.40	$K	32,400.00
TT28305CA6	A8	LC02B	RPP/CH2M - Electricians	2005	Equipment Removal (2 Elec.)	7T300		GB00	2	96.00	HRS	4,037.76
TT28305CA6	A8	LC08B	RPP/CH2M - Plumbers & Pipefitters	2005	Equipment Removal (5 Fitters)	7T300		GB00	2	240.00	HRS	9,484.80
TT28305CA6	A8	LE11E	RPP/CH2M - Quality Control Engrs	2005	Equipment Removal	7T300		GB00	2	48.00	HRS	2,453.76
TT28305CA6	A8	LM01E	RPP/CH2M - First Line Supervisors	2005	Equipment Removal (3PIC, 2 Supr)	7T300		GB00	2	144.00	HRS	6,778.08
TT28305CA6	A8	LR05B	RPP/CH2M - Nuclear Waste Process Ops	2005	Equipment Removal (8 NPO)	7T300		GB00	2	384.00	HRS	16,189.44
TT28305CA6	A8	LT05B	RPP/CH2M - Health Physics Techs	2005	Equipment Removal (4 HPT)	7T300		GB00	2	192.00	HRS	7,624.32
TT28305CA6	A8	LT07B	RPP/CH2M - Instrument & Control Techs	2005	Equipment Removal	7T300		GB00	2	48.00	HRS	2,024.16
TT28305CA6	A9	3PL	RPP/CH2M PHMC Support to RPP	2005	Equipment Disposal 10 boxes - 1300 CF @ $117.02/cf	7T300		GB00		152.10	$K	152,100.00

Task Title:	Isolate/Post Disconnect/Remove Equipment	Revision Number:	b
Sched Act Id:	07.12.04	WBS Number:	A5.02.01.04.07.12
Activity Owner:	SST Retrieval	PBS Number:	
Prepared By:	JR Biggs/AREngelman		

7.0 Notes:

1. Consumables such as plastic sheeting, tape, containments, and waste bags are included in this figure. Small tools and PPE are provided by Operations and are excluded from this estimate.

2. All labor hours have been increased by 20% to account for unexpected occurances such as weather and resource availability, based on Interim Stabilization experience. Hours include pre and post job activity including pre-job briefings and dress/undress as applicable.

3. The crane crew consists of the following personnel and equipment:
Rates are based on the FY01 published site indirect pool rates
1 - Management PIC (Person in Charge) ($130/hr)
1 - Teamster - Heavy Load Truck Driver ($81/hr)
1 - Operator - Crane Operator ($81/hr)
4 - Ironworker/Riggers - Rig pump for lifting, flag crane operator, etc ($324/hr)
1 - 33T Crane/truck/trailer - ($500/day or $55.56/hr.)
Therefore:
The total Crane and Rigging Crew Hourly Rate = $672/hr rounded
Daily rate = 8 hrs X $672 = $5,376

Cost Estimating Input Sheet

Task Title:	Operations Engineering	Revision Number:	b
Sched Act Id:	07.12.06	WBS Number:	A5.02.01.04.07.12
Activity Owner:	SST Retrieval	PBS Number:	
Prepared By:	CEHanson/AREngelman		

1.0 Scope Description:

This activity includes engineering and PNNL support during retrieval operations,retrieval demonstration evaluation and equipment removal activities..

2.0 Estimating Assumptions and Exclusions:

A - The technical support required during operations is similar to that required for the SY-101 Level Rise Remediation System.

3.0 Basis of Estimate:

A- Engineering Support

A1 - Engineering support - This engineering provides support during retrieval operations, retrieval demonstration evaluation and equipment removal activities.

A2 - Process Engineering support: 1 FTE for 12 mos. (FY05)
Support for review of sampling and analysis data, monitoring, data review, and consulting support during retrieval demonstration field operations, collection of data and preparation of final process test report, review of test data against TFCOUP assumptions and update of planning documentation to reflect revised performance expectations.

B. PNNL Support
B1- PNNL LDMM engineering support - 1.5 FTE (FY05)
B2- Operations Support: Participate in process control decisions - 1 FTE (FY05)
B3 -TMS Operational Support - Support during system testing (.4 FTE - FY05)
B4- Densimeter Operational Support - Support during system testing (.4 FTE - FY05)
B5- Data Acquisition System (DAS) Support -Support during system testing (.2 FTE - FY05)

4.0 Estimate Stage and Method:

Preliminary/Analogy

5.0 Legal Drivers/Reference Documents:

Tri-Party Agreement Milestone M-45-03C, "Complete Full Scale Saltcake Waste Retrieval Technology Demonstration at S-112"
DOE Order 413.3, Program and Project Management for the Acquisition of Capital Assets,

RPP-7526, Preliminary Engineering Report for the 241-S-112 Retrieval System

RPP-8791, PRELIMINARY PROJECT EXECUTION PLAN FOR TANK 241-S-112 SALTCAKE WASTE RETRIEVAL TECHNOLOGY

Cost Estimating Input Sheet

Task Title:	Operations Engineering	Revision Number:	b
Sched Act Id:	07.12.06	WBS Number:	A5.02.01.04.07.12
Activity Owner:	SST Retrieval	PBS Number:	
Prepared By:	CEHanson/AREngelman		

DEMONSTRATION

RPP-7825, Single-Shell Tank S-112 Full Scale Saltcake Waste Retrieval technology Demonstration Functions and Requirements

Cost Estimating Input Sheet

Task Title:	Operations Engineering	Revision Number:	b
Sched Act Id:	07.12.06	WBS Number:	A5.02.01.04.07.12
Activity Owner:	SST Retrieval	PBS Number:	
Prepared By:	CEHanson/AREngelman		

P3 Activity	Sub Task	P3 Res Code	ResourceType	Fiscal Year	SubtaskDescription	Org Code	Seq Num	COA	Note Ref	Budget Qty	Qty Type	Total Qty
TT28305CA6	A1	98L	RPP/CH2M Cogema	2005	Operations Design integration (.5 FTE-12mo. @ 151hr/mo @ $100/hr)	7P300		B000		90.60	$K	90,600.00
TT28305CA6	A1	98L	RPP/CH2M Cogema	2005	Project Engrng. (.5FTE -12 mos @ 151hr/mo @ $112/hr) (.25 FTE @	7P300		B000		145.00	$K	145,000.00
TT28305CA6	A1	98L	RPP/CH2M Cogema	2005	Engr support- (1FTE -12mo @ 151hr/mo) @ $90/hr	7P300		B000		163.10	$K	163,100.00
TT28305CA6	A2	LE13E	RPP/CH2M - Other Engineers	2005	Process engineering support - .5 FTE	7P300		B000		904.00	HRS	56,129.36
TT28305CA6	B1	3DL	RPP/CH2M Other Hanford Contractors	2005	PNNL Support - LDMM System (1.5FTE @ $110/hr)	7P300		B000		298.30	$K	298,300.00
TT28305CA6	B2	3DL	RPP/CH2M Other Hanford Contractors	2005	PNNL support 1 FTEr @ $110/hr.	7P300		B000		198.90	$K	198,900.00

Cost Estimating Input Sheet

Task Title:	Operations Engineering	Revision Number:	b
Sched Act Id:	07.12.06	WBS Number:	A5.02.01.04.07.12
Activity Owner:	SST Retrieval	PBS Number:	
Prepared By:	CEHanson/AREngelman		

7.0 Notes:

Figure A-2
Project S-112 Saltcake Waste Retrieval Technology Demonstration Project Baseline Schedule

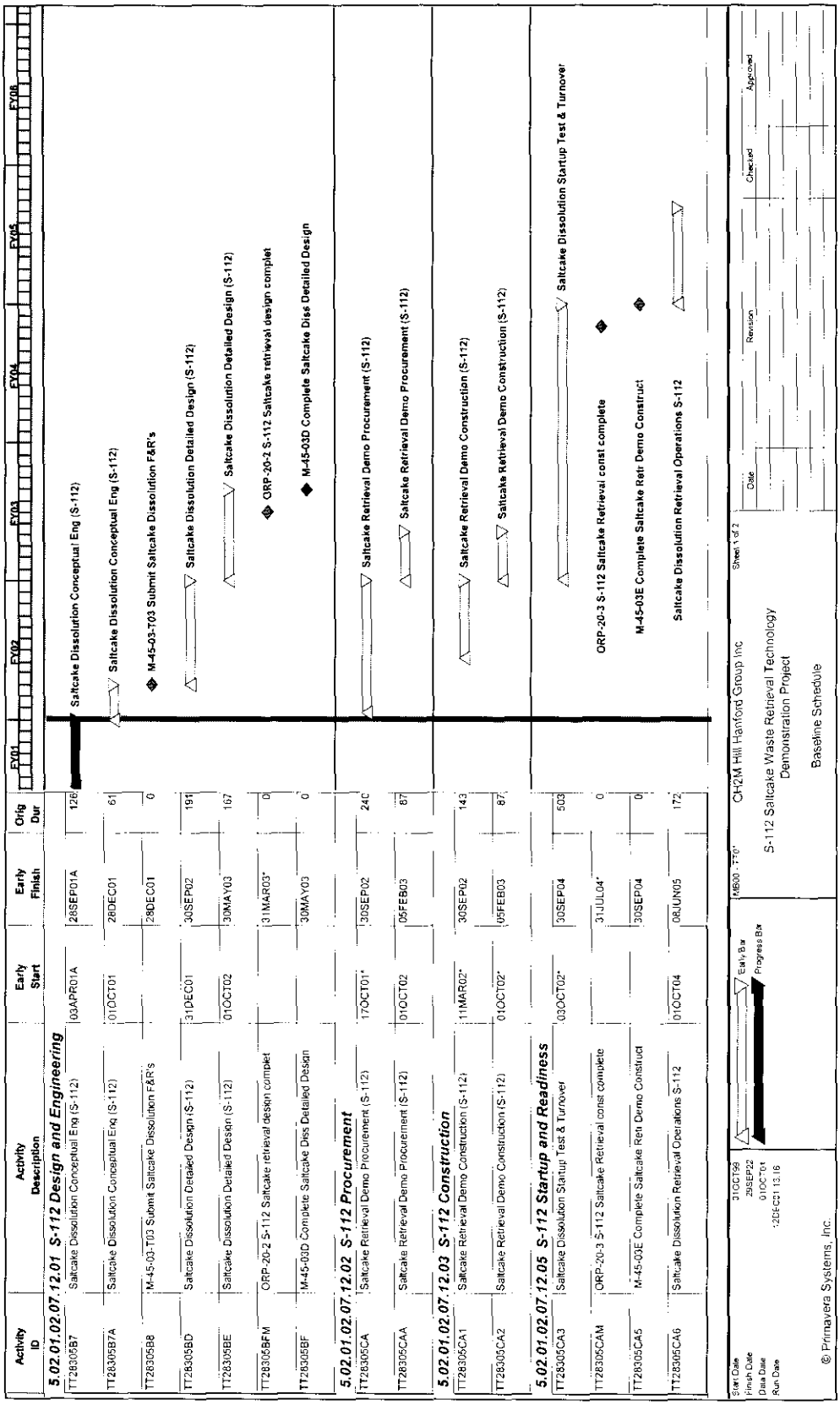

Figure A-2 (continued)
Project S-112 Saltcake Waste Retrieval Technology Demonstration Project Baseline Schedule

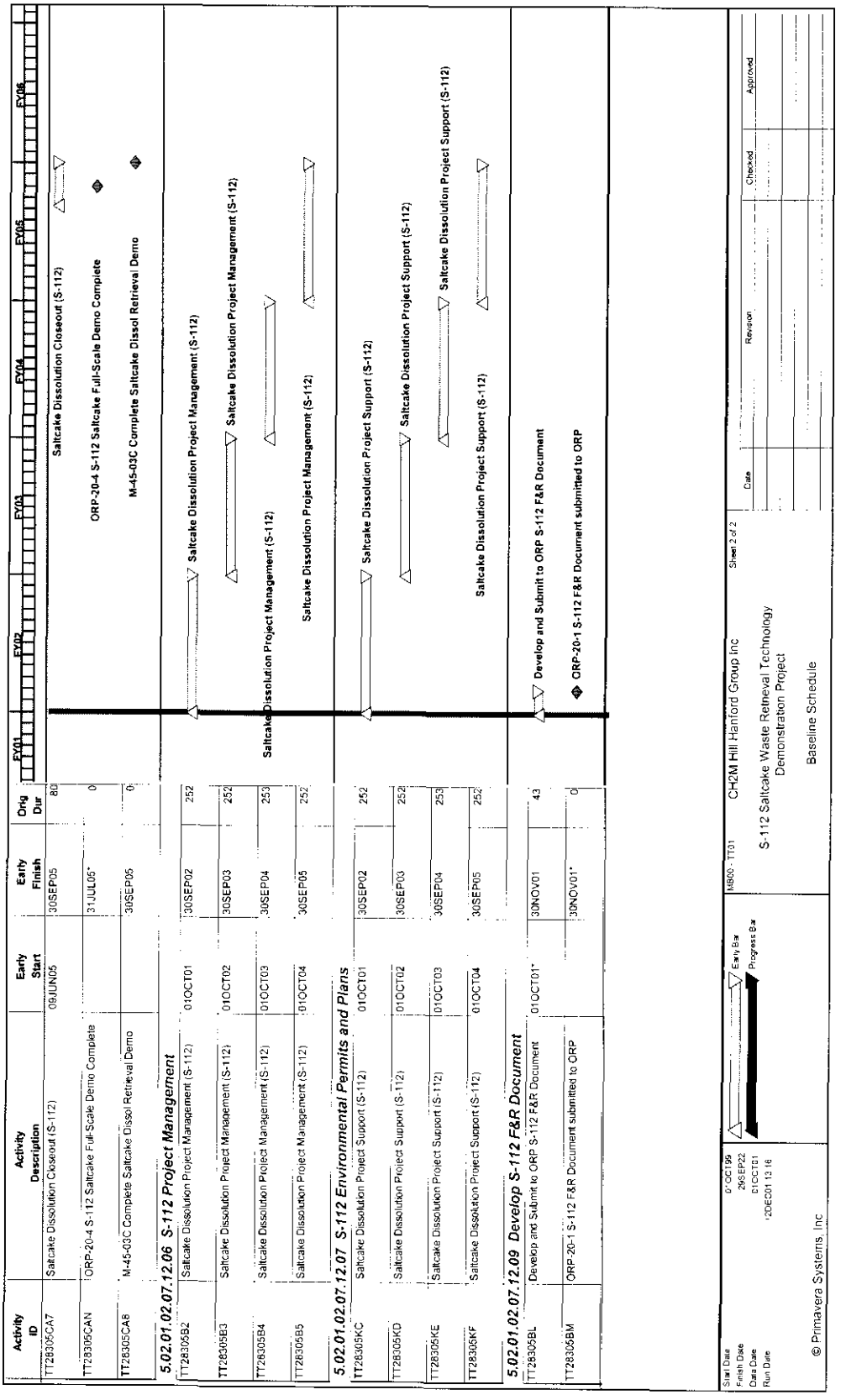

Appendix B
Construction Specification

This page intentionally left blank.

S-112 Saltcake Waste Retrieval Technology Demonstration Project

OUTLINE SPECIFICATION

OUTLINE SPECIFICATION INDEX

Section - Specification Division	S-FARM	SY-FARM
DIVISION 2 SITEWORK		
Section 02050 Demolition	X	
Section 02200 Earthwork	X	
Section 02650 Pipe Utilities	X	
DIVISION 5 METAL		
Section 05120 Structural Steel	X	
Section 05500 Metal Fabrications	X	
Section 05555 Stainless Steel Pit Liner	X	
DIVISION 9 FINISHES		
Section 09805 Special Coatings	X	
Section 9800 Special Coatings	X	
Section 09900 Painting	X	
DIVISION 13 SPECIAL CONSTRUCTION		
Section 13440 Instrumentation	X	
DIVISION 15 MECHANICAL		
Section 15493 Chemical Process & Piping Systems	X	

Section - Specification Division	S-FARM	SY-FARM
Section 15499 Building Services Piping Systems	X	
Section 15500 Heating, Ventilating & Air Conditioning	X	
DIVISION 16 ELECTRICAL		
Section 16400 Service & Distribution	X	

OUTLINE SPECIFICATION

DIVISION 2 – SITEWORK

Section 02050 Demolition

General

Table CS-2-1 identifies equipment/components to be installed, removed/disposed of as part of the S-112 Saltcake Waste Retrieval Technology Demonstration Project scope. Specific details of demolition (by tank farm) are identified below.

Table CS-2-1. Tank Equipment Removal/Installation.

TANK	RISER	SIZE (IN.)	EXISTING EQUIPMENT TO BE REMOVED	EQUIPMENT TO BE INSTALLED
S-112	002	4	Blind Flange	SHMS
S-112	006	12	Observation Port	Camera
S-112	007	12	Blind Flange	Breather Filter
S-112	011	4	None	Sprinkler
S-112	013	42	Existing Saltwell Pump	Saltwell Pump
S-112	014	4	Breather Filter, SHMS	Sprinkler
S-112	016	4	None	Sprinkler

S Farm

1. Remove saltwell pump from 241-S-112. Disposal per LLCE Program.
2. Remove breather filter. Dispose in standard burial box.
3. Relocate standard hydrogen monitoring system (SHMS).

SY Farm

1. None

Section 02200 Earthwork

S Farm

1. Excavation for underground piping and utility trenches.
2. Excavation for leveling of Chemical Injection/Sample Station Skid pad.
3. Excavation for leveling of PIC Skid pad.
4. Contaminated soil: Most soil displaced during excavation activities will be used as backfill in the general vicinity of the original excavation. ALARA concerns require the contaminated soil to be managed as any other waste generated on the Hanford Site.
5. Stabilization of disturbed areas: WSDOT M41-10, Section 9-09(3), top course.

SY Farm

1. None

Section 02650 Pipe Utilities

S Farm

1. None

SY Farm

1. None

DIVISION 5 – METALS

Section 05120 Structural Steel

S Farm

1. Rolled steel shapes and plates: ASTM A 36.
2. Steel tubing: ASTM A 500, Grade B.
3. Bolts
   a. General application: ASTM A 307, Grade A or B.
   b. Structural connections: ASTM A 325.
4. Nuts: ASTM A563, heavy hex.
5. Washers: ASTM F844, circular.
6. Welding electrode: E70XX.
7. Expansion anchors: Hilti Kwik-Bolt II.
8. General Fastening: AISC S326 and M011.
9. Deck Plating – diamond plate decking for temporary trench cover.

SY Farm

1. None

Section 05500 Metal Fabrications

S Farm

1. Steel pipe: ASTM A106, Grade B, Schedule 40.
2. Supports: Channels, nuts and bolts: Unistrut.
3. Weld studs: Nelson Type H4L.
4. Rolled steel shapes, plates, and bars: ASTM A 36.
5. Expansion Anchors: Hilti Fastening Systems Kwik-Bolt II.
6. Steel Plate Pit Cover: 3 Inch, Carbon Steel, ASTM A36.

SY Farm

1. None

DIVISION 9 – FINISHES

Section 09900 Painting

S Farm

1. Exterior metal surfaces
   a. Surface preparation: Power tools (SSPC SP 2) or commercial blast (SSPC SP 3).
   b. Application PDCA Architectural Specification Manual and manufacturer's instructions.
   c. Primer: Rust-inhibitive ferrous metal primer.
   d. Base and finish coats: Alkyd semi-gloss enamel.

SY Farm

1. None

Section 13440 Instrumentation

S Farm

1. Saltwell Skid Instrumentation – Saltwell skid instrumentation shall be specified in accordance with drawings H-14-104158 through H-14-104163.

SY Farm

1. None

DIVISION 15 – MECHANICAL

Section 15493 Chemical Process Piping Systems

S Farm

1. Materials

   a. Hose-in-hose transfer line: Specification RPP-6028, Rev. 0, *Specification for Hose in Hose Transfer Lines for Hanford's Interim Stabilization Program.*

   b. Jumper assemblies: Stainless steel, Hanford Standard HS-BS-0084 modified.

   c. Sprinkler supply hoses: 1 Inch, insulated, heat traced. O'Brien Corp., Helical Convoluted Stainless Steel, 625 psig, Type J thermocouple, or equal.

2. Equipment

   a. Saltwell Pumping System (screen, eductor, centrifugal pump, and associated piping). Reference drawing H-14-103084.

   b. Miscellaneous equipment

      i. Dunnage assembly: Tube steel with lifting attachments.

      ii. Spray Nozzles: nominal 4 gpm, <40 psig pressure drop, 90 degree spray cone, stainless steel. Spray Systems Co., Fulljet model 3/8 GANV-SS-23 or equal.

SY Farm

1. None

Section 15499 Building Services Piping Systems

S Farm

1. Materials

   a. Piping, tubing, and fittings

      i. Piping in contact with earth or concrete and not cathodically protected shall have a protective coating.

      ii. Raw Water (RW) piping: Carbon steel, Pipe Code M-5.

      iii. Piping systems fabricated and installed in accordance with ASME B31.9.

iv. Insulation: Above Grade, Flexible closed cell elastomeric thermal insulation with low-transmittance vapor barrier for -40 to +220°F temperature range. Weather resistant protective finish for outdoor applications. Armstrong "Armaflex II."

b. Equipment

i. Manual Valves

1. Ball valves: 3-piece brass body, stainless steel, Teflon seats and body seal, threaded ends (Worcester).

c. Pipe Codes

PIPE CODE M-5			
Service	Design Pressure Psig	Test Pressure psig	Design Temp °F
Filtered Water (RW)	200	300	200
Sizes	1-1/2 inch and smaller	2 – inch and larger	
Pipe	ASTM A 106, Grade B.		
Wall Thickness	Schedule 40		
Fittings (1)	ASTM A47, Grade 32510 or 35018, or ASTM A197, Class 150, threaded in accordance with ASME B16.3.	ASTM A234, Grade WPB, wrought steel, buttwelding in accordance with ASME B16.9. Wall thickness to match pipe.	

Section 15500 Heating, Ventilation, and Air Conditioning

S Farm

1. Materials

a. Duct: Stainless steel sheet: ASTM A 240, Type 304 or 304L.

b. Duct reinforcement: Stainless steel sheet: ASTM A 240, Type 304 or 304L.

Stainless steel shapes: ASTM A 276, Type 304 or 304L.

c. Duct supports and hangers

Channels and clamps: unistrut.

Carbon steel shapes: ASTM A 36.

Stainless steel shapes: ASTM A 276, Type 304 or 304L.

Carbon steel rods: ASTM A 108 with ASTM A 563 nuts and plain washers.

Fasteners: ASTM A 307, Grade A or B bolts, with ASTM A 563, heavy hex nuts, UNC threads. Finish to be cadmium plating.

d. Duct insulation: UL listed in the building materials directory, and carry UL Logo.

   Insulation and adhesive shall have UL fire hazard classifications of 25 maximum for flame spread and 50 maximum for smoke developed.

   Insulation for duct: 11/2" – inch thick glass fiberboard, 3 lb/ft^3 minimum density board type.

e. Insulation Jacket: Stainless steel jacket 0.010" thick.

DIVISION 16 – ELECTRICAL

Section 16400 Service and Distribution

General

1. Installation of electrical components shall be per NFPA 70, National Electrical Code.

2. Heat Trace

   a. Chromalox Self-regulating heating cable, Type SRL, 5 Watt per foot, 120 VAC, 150°F (65 °C) maximum maintenance temperature.

   b. Local control for Heating Cable, Chromalox Type RTAS-1 22 AMP SPDT, 120 Vac.

   c. Chromalox Splice and tee Kit, Catalog # RTST-1.

   d. Chromalox End Seal Kit, Catalog # RTES-1.

S Farm

1. Materials

   a. Conduit: PVC schedule 80 for buried applications, galvanized steel for exposed applications, liquid-tight flexible metal for interfaces with vibrating equipment and motors.

   b. Conductors: Stranded copper with Type THWN/THHN or XHHW insulation.

   c. Control/Signal Cable: Type TC, 600V, 90 °C copper, #14 minimum, number of conductors as required.

   d. Power Cable: Type G, 600V, gauge and number of conductors as required.

   e. 3-Phase Power Receptacles: 480V, 3-phase, 30A and 60A, 3-wire, cord connecting, with strain relief fitting.

   f. Yellow Jacket cable / hose protection. Peterson Systems International.

3. Equipment

   a. Equipment enclosures: NEMA ICS 6 Type 3R outside building.

   b. Safety switches: Non-fused, 240 V AC, rated as noted on the Drawings.

SY Farm

   a. None

Appendix C
Calculations

This page intentionally left blank.

INTEROFFICE MEMO

CH2MHILL
Hanford Group, Inc.

RPP-7526, Rev. 2

From:	Process Control	7G300-01-MAK-049
Phone:	376-5118	
Date:	Decemember 12, 2001	
Subject:	ESTIMATION OF DILUTIN WATER REQUIRED FOR TANK 241-S-112 RETRIEVAL	

To:	R. E. Bauer	R4-01
Copies:	B. E. Brendel	S7-90
	N. S. Cannon	R4-01
	S. D. Estey	R2-11
	C. E. Hanson	R4-09
	M. A. Knight	R2-11 Mallinity
	D. A. Reynolds	R2-11
	WBB File/LB	

The attachments contain an estimate of dilution water required for tank 241-S-112 retrieval. These numbers should be considered as a planning estimate only and will be refined as we finalize a process flowsheet for this task. The estimate is based on Lenna Mahoney's water only Environmental Simulation Program (ESP) model and the Best Basis Inventory estimated composition.

We should be estimating our waste transferred to double-shell tanks (DSTs) at about 2 million gallons. However, Lenna's model indicates that at least 1 million gallons will be fairly dilute and should be concentrated in the evaporator. This will result in final stored waste volume closer to the originally projected 1.3 million gallons. The details will be addressed in the flowsheet and coordinated with the DST Waste Volume Projection.

If you have any questions, please call me at 373-5118.

W. Blaine Barton

W. B. Barton
Senior Engineer

mjg

Attachments

Estimation of Dilution Water Required for S-112 retrieval

Dan's dilution rules

1. Discharge stream should be SpG 1.3 – 1.35 but rounded to a convenient ratio of water to waste for operations, i.e., 1:2, 1:1, 1:4, etc.
2. Normal operation of a non-diluted stream will result in 25% water addition in the form of back flushing the screen, line flushes, etc.
3. The Sundyne pump uses 0.3 –0.5 gpm water to lubricate the bearings. Jim Bellomy says that we generally use about 0.5 gpm currently. This water ends up in the process stream. Note when the required dilution ratio falls below 12.5 %, the lubrication water is adequate to meet the dilution need.

Assumptions:

- Use the Lenna Mahoney water only spreadsheet information which summaries an ESP model of the dissolution. This was received as an email on 10/19/01

Equations:

$$X * \rho 1 + (1 - X)\rho 2 = 1.35$$

where
X = fractional contribution component 1, water
$\rho 1$ = Specific gravity (density) of component 1, water
$\rho 2$ = Specific gravity (density) of component 2, brine

This is essentially Dan's rule #1 above. If we solve for X this becomes:

$$X = (1.35 - \rho 2) / (\rho 1 - \rho 2)$$

Applying this equation to Lenna Mahoney's Spreadsheet for those values where the Specific Gravity of the brine is greater than 1.35 gives:

Volume water added as a % of original waste	% H2O	Specific Gravity	Required Dilution fraction H20	Recommended dilution ratio (water:brine)
0	45.8%	1.57	0.38195303	2:3
0.10	43.3%	1.55	0.36548223	2:3
0.20	43.5%	1.55	0.36108069	2:3
0.30	44.7%	1.55	0.36432982	2:3
0.40	47.7%	1.51	0.31075226	1:2
0.50	49.8%	1.47	0.26035503	1:2
0.60	50.9%	1.45	0.22377467	1:3
0.70	51.5%	1.44	0.19835089	1:4
0.80	51.8%	1.43	0.18109499	1:4
0.90	51.9%	1.42	0.16963227	1:5
1.00	51.8%	1.42	0.16287969	1:5
1.10	51.8%	1.42	0.15865385	1:5
1.20	55.8%	1.37	0.0588868	0
1.30	66.4%	1.27	0	0

Lenna calculated the gas free volume of the original waste is 366,000 gallons. I assumed that there would be about 66,000 gallons of pre-existing pumpable liquid in the tank.

Thus, rule #1 requires ~258,000 gallons of dilution water.

Rules #2 results in an additional 156,000 gallons of dilution water

Rule #3 adds 99,000 gallons of water.

For the calculations which support these numbers see the spreadsheet in attachment 2.
Given these assumptions the totals will be as follows.

Total brine pumped	1,325,000
Total dilution water	513,000
Total liquid to DSTs	1,838,000

Assuming a pumping rate of 8 gpm and 50 % availability, this will require 320 days or just under 11 months to pump.

Cumul. vol water added per vol orig waste	% H2O	Specific Gravity	cumul. drained >0.723 wt liq/sol per orig. waste volume	Dilution required due to SpG control: Required dilution ratio	dilution ratio used	Brine pumped	dilution water added	cumulative dilution water	Subtotal liquid pumped	Cum. Liquid pumped	General Dilution based on 25% water add	Sundyne Pump lub water 0.5 gpm	Totals: Cum dilution water	Cum Brine Pumped	Cum Total Pumped
0	45.8%	1.57		0.381953	0.67	43021.58	28681.05	28681.05	71702.63	71702.6257		4481.414	33,162	43,022	76,184
0.10	43.3%	1.55	0.000	0.365482	0.67	65694.58	43796.39	72477.439	109490.97	181193.60		6843.186	83,802	108,716	192,518
0.20	43.5%	1.55	0.118	0.361081	0.67	50888.06	33925.37	106402.81	84813.43	266007.03		5300.84	123,028	159,604	282,632
0.30	44.7%	1.55	0.297	0.36433	0.67	55919.73	37279.82	143682.63	93199.54	359206.58		5824.972	166,133	215,524	381,657
0.40	47.7%	1.51	0.436	0.310752	0.33	61395.20	20465.07	164147.7	81860.27	441066.84		5116.267	191,714	276,919	468,634
0.50	49.8%	1.47	0.589	0.260355	0.33	64686.51	21562.17	185709.87	86248.68	527315.52		5390.542	218,667	341,606	560,273
0.60	50.9%	1.45	0.757	0.223775	0.25	66550.50	16637.62	202347.49	83188.12	610503.64		5199.258	240,504	408,156	648,660
0.70	51.5%	1.44	0.933	0.198351	0.2	67372.33	13474.47	215821.96	80846.80	691350.44		5052.925	259,031	475,528	734,560
0.80	51.8%	1.43	1.115	0.181095	0.2	67527.67	13505.53	229327.49	81033.20	772383.64		5064.575	277,601	543,056	820,658
0.90	51.9%	1.42	1.299	0.169632	0.2	67746.95	13549.39	242876.88	81296.35	853679.99		5081.022	296,232	610,803	907,035
1.00	51.8%	1.42	1.484	0.16288	0.166667	53864.90	8977.483	251354.37	62842.38	916522.37		3927.649	309,137	664,668	973,805
1.10	51.8%	1.42	1.669	0.158654	0.166667	35370.57	5895.096	257749.46	41265.67	957788.04		2579.104	317,611	700,039	1,017,650
1.20	55.8%	1.37	1.816	0.058887	0	35194.40	0				8798.6	2199.65	328,609	735,233	1,063,842
1.30	66.4%	1.27	1.913	-0.28393	0	38717.91					9679.478	2419.87	340,709	773,951	1,114,660
1.40	76.7%	1.18	2.009	-0.94878	0	41560.66					10390.16	2597.541	353,697	815,512	1,169,208
1.50	83.1%	1.13	2.115	-1.6455	0	43146.71					10786.68	2696.67	367,180	858,658	1,225,838
1.60	86.8%	1.11	2.228	-2.17893	0	43799.74					10949.94	2737.484	380,867	902,458	1,283,325
1.70	88.8%	1.10	2.346	-2.49301	0	44042.25					11010.56	2752.641	394,630	946,500	1,341,131
1.80	89.9%	1.10	2.466	-2.66109	0	44134.98					11033.74	2758.436	408,423	990,635	1,399,058
1.90	90.6%	1.09	2.586	-2.74732	0	44172.07					11043.02	2760.754	422,226	1,034,807	1,457,034
2.00	90.9%	1.09	2.707			44188.00					11047	2761.75	436,035	1,078,995	1,515,030
2.10	91.1%	1.09	2.827			44194.97					11048.74	2762.186	449,846	1,123,190	1,573,036
2.20	91.2%	1.09	2.948			44198.06					11049.52	2762.379	463,658	1,167,388	1,631,046
2.30	91.3%	1.09	3.069			44199.41					11049.85	2762.463	477,470	1,211,588	1,689,058
2.40	91.3%	1.09	3.190			38357.32					9589.33	2397.332	489,457	1,249,945	1,739,402
2.50	91.3%	1.09	3.310			37392.20					9348.049	2337.012	501,142	1,287,337	1,788,479
2.60	94.3%	1.06	3.415			37707.06					9426.765	2356.691	512,926	1,325,044	1,837,970

Days to pump at 8 gpm & 50 %TOE. 319

Notes

Columns a,b,c,and d came from Lenna Mahoney's water only spreadsheet.
Lenna calculated the beginning gas free volume as 366,000 gallons. All results are based on this number.
Assumes the solid contains 73200 gallons of water and it associated salts before water addition begins (which are diluted)

HNDTEAM

CALCULATION COVER SHEET
Form EP-3.3-1F

Date: 1/30/01

Calculation No: 4412.70.ECAL.001
Calculation Title: Electrical Power Calculations for the S-112 Saltcake Dissolution and Demonstration Project
Project No. & Title: 4412-70

ORIGINAL AND REVISED CALCULATION/ANALYSIS APPROVAL

	Rev. 0 Name/Signature/Date	Rev. _ Name/Signature/Date	Rev. _ Name/Signature/Date
Originator:	B.J. Hickman 1/30/00		
Checked By:	S.G. Romero per telecon 1/30/01		
Approved By:			
Other:			

AFFECTED DOCUMENTS

Document Number	Document Title	Rev. Number

RECORD OF REVISION

Rev.	*Reason for Revision*
0	Release

HNDTEAM DESIGN CALCULATION SHEET	Project No. 4412-70 Sheet 2 of 5
Calculation No. 4412.70.ECAL.001	PERFORMED BY : B.J.Hickman 1/30/00 DATE Print & Sign
Rev. No. 0	CHECKED BY: S.G. Romero KAB per telecon 1/30/01 DATE Print & Sign
Calculation Title: Electrical Power Calculations for the S-112 Saltcake Dissolution and Demonstration Project	

INTRODUCTION

Purpose

The purpose of this calculation is to verify that there is adequate capacity in the 3-50 kVA transformer bank (transformers C6486P, C6487P, and C6488P) to continue to operate the S-Farm Dilution System equipment, the existing 500 cfm exhauster, new 120V heat trace for S-112, and the existing loads (see Drawing 4412-070-EDWG-102). According to the Tank Farm Cognizant Engineer, Paul Kison, the exhauster was not originally operated while the Dilution System was running (although it was designed to do so), and the connected load on the transformer bank appears to be quite substantial. As such, it was felt that a calculation was merited to determine whether the transformer bank would require upgrading to support the new loads and continued operation of the S-Farm Dilution System equipment.

Scope

The scope of this calculation is to estimate, using metering data and engineering judgment, the degree of loading expected at the subject transformer bank. Although the S-112 Saltcake Dissolution and Demonstration Project is also adding a new Saltwell Skid load to the 241-S Distribution Station (see Drawing 4412-070-EDWG-101), a calculation was not deemed necessary because the 241-S Distribution Station was specifically designed to support saltwell skid loads, and by the time this project is installed, Interim Stabilization activities are expected to be finished at S-Farm, thereby presenting no competing demand for the power supply at the 241-S Distribution Center.

DESIGN BASIS

Design Inputs

The design inputs for this calculation were:

1. One-line diagram for the 241-SX power rack (ECN 658899).
2. Drawing for the 244-S-271 Service Distribution Panelboard A and 302A Catch Tank (H-14-030053, Sh 1.)
3. Metering data for above loads (Items 1 and 2) from DynCorp Electrical Utilities. (Prior to ECN 658899, the source of power for these loads was a 2400V system that was metered

separately).

4. One-line diagram for the S-Farm Dilution System (Dwg H-14-030033, Sh1).

5. Metering data for the S-Farm Dilution System from DynCorp Electrical Utilities.

6. Conversations with Ray Merriman, CHG Equipment Engineering (372-2192), who did an informal load study on the same transformer bank to prepare ECN 658899.

7. Conversations with Jim Uecker, DynCorp Utilities (373-1930).

8. Conversations with Rich Larson, CHG Tank Farms Electrical Engineering (373-9100).

9. National Electrical Code, NFPA 70.

Criteria

The primary criterion for this calculation is that the S-Farm Dilution System, with the additional loads of the exhauster and new heat trace, must be able to operate in conjunction with the normal duty cycle of the loads on the 241-SX power rack without overloading the 150kVA transformer bank.

Assumptions

Assumptions for the calculation are as follows:

1. The exhauster and the heat trace will be considered new loads, and considered continuous duty. (The exhauster feeder will require voltage drop calculations during definitive design.)
2. The metering data represents all of the existing loads served by the subject transformer bank.

REFERENCES

1. ECN 658899 (241-SX Power Rack One-Line Diagram)
2. H-14-030033, Sh. 1, (Dilution Power System One-Line Diagram)
3. Drawing for the 244-S-271 Service Distribution Panelboard A and 302A Catch Tank (H-14-030053, Sh 1.)
4. Metering Data from meter number 78-803-820 (Dilution Power System

5. Metering Data from meter number 30-980-818 (old 2400V service to loads shown on ECN 658899 and H-14-030053, Sh1.).
6. National Electrical Code, NFPA 70.
7. Drawing 4412-070-EDWG-101.
8. Drawing 4412-070-EDWG-102.

METHODS

Metering Data

Month	Demand kW at 241-SX system meter	Average kW at 241 SX system meter	Demand kW at dilution system meter	Average kW at dilution system meter
Jun-98	11	9		
Aug-98	10	8		
Sep-98	11	9		
Oct-98	12	9		
Nov-98	19	15		
Dec-98	22	18		
Jan-99	24	19		
Feb-99	26	21		
Mar-99	23	18		
Apr-99	18	14	21	2
May-99	20	16	39	7
Jun-99	17	13	22	2
Jul-99	24	10	8	1
Aug-99	24	7	21	4
Sep-99	24	7	8	1
Oct-99	24	7	11	1
Nov-99	24	8	22	4
Dec-99	24	12	22	3
Jan-00	24	10	13	3
Feb-00	24	9	24	3
Mar-00	24	10	37	7
Apr-00	24	9	41	6
May-00	24	10	31	4
Jun-00	24	7	31	2
Max kW =	**26**	**21**	**41**	**7**

To be conservative, the maximum demand kW from both systems are added (according to Jim Uecker of DynCorp Utilities, these metering data represent ALL of the existing load on the transformer bank):

26kW + 41kW = 67kW

Assuming a conservative power factor of 0.80:

67kW / 0.80 = ~ 84kVA

In Article 220-35 of the National Electrical Code, metering data is allowed to be used for analysis as follows:

"For the purposes of allowing additional loads to be connected to existing feeders and services, its shall be permitted to use actual maximum kVA demand figures to determine the existing load on a service or feeder when all the following conditions are met:

1. *The maximum demand data is available in kVA for a minimum of a one-year period.*
2. *The existing demand at 125% plus the new load does not exceed the ampacity of the feeder or rating of the service.*
3. *The feeder has overcurrent protection in accordance with section 240-3 and service has overload protection in accordance with Section 230-90."*

Existing load × 125% = 84 kVA ×1.25 = 105 kVA

Exhauster load (based off of fuse size) ≅

$$(40A \times 80\%) \times 480V \times \sqrt{3} = 27 \text{ kVA}$$

The estimated amount of heat trace required for the S-112 project will be 400 feet at 10W per foot:

$$400 \times 10W = 4 \text{ kW } (4 \text{ kVA})$$

Existing load:	105 kVA
Exhauster:	27 kVA
New heat trace:	4 kVA
Total:	**136 kVA**

RESULTS AND CONCLUSIONS

Since the transformer is rated for 150 kVA, there is adequate capacity to handle the loads projected for this project. However, since this project is only in the conceptual phase, and the transformer bank appears to be quite heavily loaded, it would be wise to re-assess the existing loads during definitive design to determine the extent of any load growth at that time (October 2003).

Appendix D
Master Equipment List

This page intentionally left blank.

S-112 SALTCAKE WASTE RETRIEVAL TECHNOLOGY DEMONSTRATION PROJECT MASTER EQUIPMENT LIST

COMPONENT DESCRIPTION / FUNCTION	LOCATION	SAFETY CATEGORY DESIGNATION (REF DOC)	SAFETY FUNCTION	P&ID / DWG	NPH & PER-FORM CAT	QA LVL
EXISTING WASTE TANKS	S-112 & SY-102	SC (SAR-067, Sec. 4.3.4), SS (SAR-067, 4.4.1)	ORGANIC SOLVENT FIRE, FLAMMABLE GAS DEFLAGRATION, & SEISMIC ACCIDENTS; TANK FAILURE	4412-070-CDWG-102, PDWG-102, MDWG-101	PC-3	1
EXISTING PRIMARY TANK LEAK DETECTION SYSTEM	S-112 & SY-102	SS (SAR 067 REV. 1-F, ECN 650166, Sec. 4.3.7)	PREVENT FLAMMABLE GAS ACCUMULATION	4412-070-PDWG-102	PC-3	1
NEW RAW WATER DISTRIBUTION SYSTEM, VALVES, HOSE AND HEAT TRACE	S-FARM, S-112	GS	NONE	4412-070-PDWG-102	PC-1	3
OVER GROUND TRANSFER SYSTEM: ENCASEMENTS	S-12A PUMP PIT TO S-C VALVE PIT	SS (SAR 067 REV. 1-F, ECN 650166, Sec. 4.4.3)	DIRECT LEAKED WASTE TO STRUCTURE, PROTECT PRIMARY ENCASEMENT	4412-070-PDWG-102, MDWG-101	PC-3	1
OVER GROUND TRANSFER SYSTEM: PIT CONNECTIONS (DOGHOUSE AND STRONG BACK)	S-012A PUMP PIT & S-C VALVE PIT	SS (SAR 067 REV. 1-F, ECN 650166, Sec. 4.4.3)	PREVENT AEROSOL RELEASE, PROVIDE SECURE HOSE TRANSITION INTO PIT	4412-070-PDWG-102, MDWG-101	PC-3	1
OVER GROUND TRANSFER SYSTEM: HEAT TRACE	S-12A PUMP PIT TO S-C VALVE PIT	SS (SAR 067 REV. 1-F, ECN 650166, Sec. 4.4.3)	PROTECTION FROM FREEZING	4412-070-PDWG-102	PC-3	1
EXISTING OVER GROUND TRANSFER SYSTEM: ENCASEMENTS	S-C VALVE PIT TO S-A VALVE PIT	SS (SAR 067 REV. 1-F, ECN 650166, Sec. 4.4.3)	DIRECT LEAKED WASTE TO STRUCTURE, PROTECT PRIMARY ENCASEMENT	4412-070-PDWG-102, MDWG-101	PC-3	1
EXISTING OVER GROUND TRANSFER SYSTEM: PIT CONNECTIONS (DOGHOUSE AND STRONG BACK)	S-C VALVE PIT TO S-A VALVE PIT	SS (SAR 067 REV. 1-F, ECN 650166, Sec. 4.4.3)	PREVENT AEROSOL RELEASE, PROVIDE SECURE HOSE TRANSITION INTO PIT	4412-070-PDWG-102, MDWG-101	PC-3	1
EXISTING OVER GROUND TRANSFER SYSTEM: HEAT TRACE	S-C VALVE PIT TO S-A VALVE PIT	SS (SAR 067 REV. 1-F, ECN 650166, Sec. 4.4.3)	PROTECTION FROM FREEZING	4412-070-PDWG-102	PC-3	1
PIPE ENCASEMENTS: EXISTING UNDERGROUND TRANSFER LINE PIPING	S-A VALVE PIT TO SY-A VALVE PIT, SY-A VALVE PIT TO SY-02A PUMP PIT	SS (SAR 067 REV. 1-F, ECN 650166, Sec. 4.4.6)	DIRECT LEAKED WASTE TO STRUCTURE	4412-070-PDWG-102, MDWG-101	PC-3	1
EXISTING TANK LEVEL MONITORING SYSTEM	S-112 & SY-102	SS (SAR 067 REV. 1-F, ECN 650166, Sec. 4.4.9)	SUPPORT TEMP MONITORING; PREVENT ORGANIC REACTION	4412-070-PDWG-101	PC-3	1

S-112 SALTCAKE WASTE RETRIEVAL TECHNOLOGY DEMONSTRATION PROJECT MASTER EQUIPMENT LIST

COMPONENT DESCRIPTION / FUNCTION	LOCATION	SAFETY CATEGORY DESIGNATION (REF DOC)	SAFETY FUNCTION	P&ID / DWG	NPH & PER-FORM CAT	QA LVL
EXISTING TANK TEMPERATURE MONITORING SYSTEM	S-112 & SY-102	SS (SAR 067 R1-F, ECN 650166, Sec. 4.4.10)	TANK BUMP; PREVENT ORGANIC REACTION	4412-070-PDWG-101	PC-3	1
NEW PIT TRANSFER LEAK DETECTION SYSTEM(S)	S-C VALVE PIT, S 12A PUMP PIT	SS (SAR 067 REV. 1-F, ECN 650166, Sec. 4.4.11)	MITIGATE WASTE TRANSFER ACCIDENT	4412-070-PDWG-102	PC-3	1
EXISTING PIT TRANSFER LEAK DETECTION SYSTEM(S)	S-A VALVE PIT, SY-A VALVE PIT, & SY-02A PUMP PIT	SS (SAR 067 REV. 1-F, ECN 650166, Sec. 4.4.11)	MITIGATE WASTE TRANSFER ACCIDENT	4412-070-PDWG-102	PC-3	1
VENT STACK CAM INTERLOCK	S-112	SS FOR HEPA FAILURE / HIGH TEMPERATURE (SAR 067 REV. 1-F, ECN 650166, Sec. 4.4.13)	LIMIT RAD RELEASE		PC-3	1
EXISTING VENT STACK CAM INTERLOCK	SY-102		LIMIT RAD RELEASE		PC-3	1
SERVICE WATER PRESSURE INTERLOCK / ALARM	S-112	SS (SAR 067 REV. 1-F, ECN 650166, Sec. 4.4.15)	PREVENT WASTE LEAK INTO SERVICE WATER SYSTEM		PC-3	1
ISOLATION VALVES	S-FARM PITS & SY FARM PITS	SS (SAR 067 REV. 1-F, ECN 650166, Sec. 4.4.18)	LIMIT WASTE MISROUTING	4412-070-PDWG-102	PC-3	1
MASTER PUMP SHUTDOWN AND ALARM	S-112 & SY-102	SS (SAR 067 REV. 1-F, ECN 650166, Sec. 4.4.19)	LIMIT WASTE LEAKED, LEAK DURATION AND EXPOSURE	4412-070-PDWG-102	PC-3	1
ELECTRICAL POWER	S-FARM & SY FARM	SC, SS OR GS AS REQUIRED	SUPPORT SYSTEM FUNCTION	4412-070-EDWG-101 & 102	PC-1	1
EXISTING RAW WATER SUPPLY SYSTEM, SERVICE WATER BACKFLOW PREVENTER	S-FARM	GS (SAR 067 REV. 1-F, ECN 650166)	NONE	ECN 660754	PC-1	3
SALTWELL PUMP SYSTEM, INSTRUMENTATION AND CONTROL	241-S-112 S-12A	GS (SAR 067 REV. 1-F, ECN 650166)	TSR-006, AC 5.9, IN TANK EQUIPMENT	4412-070-PDWG-102	PC-1	3
S-112 CAMERA SYSTEM	S-112	GS (HNF-SD-WM-TSR-006, AC 5.10, CLASS 1, DIV. 2)	TSR-006, AC 5.9, IN TANK EQUIPMENT	4412-070-PDWG-102	PC-1	3
IN-TANK SPRINKLERS	S-112	GS (HNF-SD-WM-TSR-006, AC 5.10, CLASS 1, DIV. 2)	TSR-006, AC 5.9, IN TANK EQUIPMENT	4412-070-PDWG-102	PC-1	3
PIT COVERS AND ABOVE GROUND STRUCTURES	S-FARM & SY FARM	GS (SAR 067 REV. 1-F, ECN 650166)	NO TRANSFER SAFETY FUNCTION	4412-070-PDWG-102 & MWDG 101	PC-1	3

S-112 SALTCAKE WASTE RETRIEVAL TECHNOLOGY DEMONSTRATION PROJECT MASTER EQUIPMENT LIST

COMPONENT DESCRIPTION / FUNCTION	LOCATION	SAFETY CATEGORY DESIGNATION (REF DOC)	SAFETY FUNCTION	P&ID / DWG	NPH & PER-FORM CAT	QA LVL
PIC SKID, PROCESS INSTRUMENTATION, MONITORING AND CONTROL	S-FARM & SY FARM	GS (SAR 067 REV. 1-F, ECN 650166)	NO TRANSFER SAFETY FUNCTION	4412-070-PDWG-102	PC-1; PC-3 FOR PUMP S/D	3, 1 FOR PUMP S/D
CHEMICAL INJECTION	S-112 WATER DISTRIBUTION SYSTEM	GS (SAR 067 REV. 1-F, ECN 650166)	NO TRANSFER SAFETY FUNCTION	4412-070-PDWG-102	PC-1	3
NEW S-C-VALVE PIT JUMPERS	S-C VALVE PIT	GS (SAR 067 REV. 1-F, ECN 650166)	NO TRANSFER SAFETY FUNCTION	4412-070-PDWG-102	PC-1	3

Appendix E
Compliance Matrix

This page intentionally left blank.

COMPLIANCE MATRIX

Detailed technical Functions and Requirements (F&Rs) for the Saltcake Dissolution Retrieval Demonstration at Tank 241-S-112 are defined in RPP-7598, Rev. 0, *Tank 241-S-112 Waste Retrieval System Level 2 Specification*. The following table provides traceability of the 241-S-112 requirements to the current design for the 241-S-112.

Level 2 Specification Section	Requirement or Objective	Comments
3.1.2.1	The 241-S-112 WRS shall interface with new and existing utilities and infrastructure systems. The following utilities are currently available at the S and SY tank farms. The adequacy of these utilities for accomplishing retrieval will be determined and refined during preliminary engineering and conceptual design. • **SST/DST Electrical Power System**. The amount of three-phase 480 V and 60 Hz power available to the 241-S-112 WRS is documented on H-14-030033, Sheets 1-3. The electrical power needs of the 241-S-112 will be determined during preliminary engineering and conceptual design. • **DST Raw Water System**. The raw water available to the 241-S-112 WRS is a 10.1 cm (4 in.) diameter line outside the SY tank farm at the SY service water pit or at a main adjacent to the 242-S evaporator, at a pressure of 482 kPa (70 psig) (TBR). Raw water sources are documented on H-14-021831, Sheets 1 and 2. • **DST Confinement Subsystem**. For the combination of waste in tank 241-S-112 and the dilution fluids required for retrieval, the available space in the DST System is assumed to require a cross-site transfer for retrieval.	**This requirement is met at a conceptual level.** The 241-S-112 WRS Preliminary Engineering Report (PER) identifies the system interfaces with the SST/DST Electrical Power System, Raw Water System, and DST Confinement System. These interfaces will be re-examined and refined, as required, during the project's conceptual design phase.
3.1.2.1.1	The 241-S-112 WRS shall accept control signals from the Master Monitor & Control System to effect the safe shutdown of waste transfer, as appropriate (e.g., leak detection, service water pressure switch interlock). Note that these shutdown signals are designated safety significant.	**This requirement is met at a conceptual level.** The PIC skid will coordinate all necessary local alarms and functions (see drawing 4412-70-IDWG-101).

Level 2 Specification Section	Requirement or Objective	Comments
3.1.2.2.1	The 241-S-112 WRS shall interface with the existing tank 241-S-112 risers and pump pit shown in Drawing H-14-010633, sheet 2, Rev. 0 (see also drawing H-2-73191, Rev. 5). The interface point with the risers is either a flange located inside the pit or as otherwise defined in the applicable pit drawings. The WRS may interface with existing tank risers that are off vertical up to 5 degrees. The tank risers may be out of round.	**This requirement is met at a conceptual level.** See 4412-70-CDWG-102, and -PDWG-102 for riser usage and proposed routing.
3.1.2.2.2	The 241-S-112 WRS shall interface with the existing risers and pump pits in the DST SY receiver tanks shown in drawings H-14-010531, Sheets 1 & 2, Rev. 7.	**This requirement is met at a conceptual level.** See 4412-70-CDWG-102, and -PDWG-102 for riser usage and proposed routing.
3.2.1.1.a	The 241-S-112 WRS shall control structure and waste temperatures in tank 241-S-112 within the following specified design limits to prevent tank structural failure: Temperatures: Maximum 149 °C (300 °F) for waste Maximum 121 °C (250 °F) for dome Maximum change of 11 °C (20 °F) per day for bulk waste temperature in the tank. (Note: Operational limitations on in-tank temperatures will be established as part of pre-conceptual and conceptual design activities (TBD-RPP-8464); however, normal bulk waste temperature range for 241-S-112 is 27° to 29 °C [80° to 85 °F] based on data from the Surveillance Analysis Computer System and any raw water additions to the tank should be at least normal bulk waste temperature).	**This requirement is met at a conceptual level.** There is an existing T/C tree in riser 4 that is currently monitored by the TMACS system. Heat removal can be accomplished by adding more water and/or increasing the amount of airflow through the tank to achieve specified design limits.
3.2.1.2	The 241-S-112 WRS shall control the waste level in tank 241-S-112 to prevent waste overflow and limit the hydrostatic head-induced stresses in the tank. Control includes monitoring waste levels, comparing monitored values to set limits, and providing signals for transfer pump shutdown at the waste level set limits.	**This requirement is met at a conceptual level.** Dip tubes will be used to monitor level in the saltwell, and a leak detection element will be provided in the central pump pit of Tank S-112. The signals will be monitored at the PIC skid. Specific control and shutdown strategies will be addressed as a part of conceptual design.
3.2.1.2.a	The 241-S-112 WRS shall prevent the waste level in tank 241-S-112 from exceeding 7.11 m (275 in.).	**This requirement is met at a conceptual level.** Dip tubes will be used to monitor level in the saltwell as well as specific gravity. The signals will be monitored at the PIC skid. Specific control strategies will be addressed in conceptual design.
3.2.1.2.b	The 241-S-112 WRS shall limit the hydrostatic forces on tank 241-S-112 such that hydrostatic forces do not exceed the force equivalent to 275 in. of waste with a specific gravity of 2.0.	**This requirement is met at a conceptual level.** The design of the sprinkler system and associated dissolution process will be optimized in conceptual design such that the hydrostatic forces on the tank will not exceed the established limits.

Level 2 Specification Section	Requirement or Objective	Comments
3.2.1.2.c	The 241-S-112 WRS shall minimize, to the extent practical, the amount of standing liquids in tank 241-S-112 during retrieval.	**This requirement is met at a conceptual level.** The design of the sprinkler system and associated process will be optimized in conceptual design such that the amount of liquid in the tank is minimized without compromising the dissolution process.
3.2.1.3	The 241-S-112 WRS shall control the vapor space pressure in tank 241-S-112 to prevent structural damage to the tank and maintain vapor space pressure limits established by accident analysis. Control includes monitoring vapor space pressure, comparing monitored values to set limits, and maintaining the vapor space pressure to within set limits.	**This requirement is met at a conceptual level.** A pressure transmitter will be provided in the dome space of Tank S-112 to monitor vapor space pressure, and an exhauster will assist in maintaining an appropriate negative pressure with respect to atmosphere. Specific control strategies will be addressed in conceptual design.
3.2.1.3.a	The 241-S-112 WRS shall control the vapor space pressure in tank 241-S-112 within the following specified design limits to prevent tank structural failure: 1. If waste level is ≥ 38.1 cm (15 in.), then -38.1 cm (15 in.) w.g. ≤ **pressure** ≤ 1.5 m (60 in.) w.g. 2. If waste level is < 38.1 cm (15 in.), then - (waste level) ≤ **pressure** ≤ 1.5 m (60 in.) w.g. (Note: Operational limits on in-tank vapor space pressure will be established as part of conceptual design. If active ventilation is required for tank 241-S-112 during waste retrieval, then it is expected that a negative vapor space pressure with respect to atmosphere will be required at all times during retrieval system operation, as this is the preferred method for verifying that ventilation is operable (HNF-SD-WM-TSR-006, *Basis for Limiting Condition of Operation (LCO) 3.2.2, Section B3.2.2)* and ensures confinement.	**This requirement is met at a conceptual level.** A pressure transmitter will be provided in the dome space of Tank S-112 to monitor vapor space pressure, and an exhauster will assist in maintaining an appropriate negative pressure with respect to atmosphere. Specific control strategies will be addressed in conceptual design.
3.2.1.4	The 241-S-112 WRS shall control the vapor space pressure in tank 241-S-112 and filter the air exhaust to restrict emissions to the environment. Control includes monitoring gaseous discharges to the environment, comparing monitored values to set limits, and restricting gaseous discharges to the limits specified in Sections 3.3.6.3.3 and 3.3.6.3.4. Periodic confirmatory measurements are required and approved methods are specified in Table 2.1 of the Hanford Site Air Operating Permit issued on 7/2/01.	**This requirement is met *in part* at a conceptual level.** A pressure transmitter will be provided in the dome space of Tank S-112 to monitor vapor space pressure, and an exhauster will assist in maintaining an appropriate negative pressure with respect to atmosphere. The exhauster HEPA filter will restrict particulate emissions, and the existing flammable gas monitor will detect any dangerous buildup of hazardous gasses. Monitoring for non-flammable gasses and/or gas filtration/scrubbing has not been addressed at this point in the design. Detailed monitoring and permitting issues will be examined during conceptual design.

Level 2 Specification Section	Requirement or Objective	Comments
3.2.1.4.a	Limits on gaseous discharges to the environments are specified in Section 3.3.6.3.3, 3.3.6.3.4 and 3.3.6.3.6.	**This requirement is met at a conceptual level.** See comments on these sections.
3.2.1.5	The 241-S-112 WRS shall be capable of removing as much of the 241-S-112 waste inventory (BBI) as technically possible with a goal of removing 99 percent of the tank contents by volume. Waste removal includes retrieving the waste from 241-S-112 and transferring the retrieved waste to the DST receiver tank. Currently, tank 241-S-112 WRS will be optimized considering regulatory, scheduling and cost considerations.	**This requirement is met** ***in part*** **at a conceptual level.** Water will be applied to the saltcake using sprinklers, and the dissolved saltcake waste will be transferred from Tank S-112 to Tank SY-102 using a combination of new overground hose-in-hose and existing piping and valve pits. See drawing 4412-70-CDWG-102 and -MDWG-101. However, the current design based on the use of saltwell pumping system equipment will require modifications to support the retrieval of sludge waste from Tank S-112.
3.2.1.5.a	The 241-S-112 WRS shall be designed to include appropriate controls on heat tracing, on transferred waste velocity, solids content, temperature and chemistry to preclude transfer line plugging during normal and upset conditions.	**This requirement is met** ***in part*** **at a conceptual level.** Heat trace and weight factor control will be used to ensure that waste is appropriate for transfer. However, the retrieval rate is insufficient to maintain solids in suspension. This issue is being carried as an uncertainty into conceptual design (see Section 4.2).
3.2.1.5.b	The 241-S-112 WRS shall be designed to be capable of retrieving waste with the following waste properties: Liquid Density: 1.1 to 1.35 kg/L Liquid Viscosity: 0.005 to 0.1 g/cm-s (0.5 to 10 cP) Solids Density: 3.0 kg/L maximum Solids Diameter: 275 μm maximum Solids Volume Percent: 10% maximum Waste Temperature: 80 °C (176 °F) maximum	**This requirement is met** ***in part*** **at a conceptual level.** The proposed design is capable of retrieving liquids from Tank S-112 in accordance with the specified properties; however, the retrieval pump (saltwell pump) is insufficient to recover and transfer significant amounts of solids (sludge) from the tank. This issue is being carried as an uncertainty into conceptual design (see Section 4.2).
3.2.1.5.c	The 241-S-112 WRS shall not introduce more than 2.83 m^3 per minute (100 cfm) of air at standard conditions into the 241-SY-102/241-SY-101 ventilation system during waste transfer operations.	**This requirement is met at a conceptual level.** The transfer pump will not have mechanical seals with a potential to leak.
3.2.1.5.d	The 241-S-112 WRS shall be designed to operate around the existing 241-S-112 "in-tank-hardware" (as necessary (e.g., installed equipment, wires, 50-100 ft steel tapes, and other debris.	**This requirement is met at a conceptual level.** The water will be applied to the waste surface at a very low energy, and the spray pattern will be adjusted as required to reach around in-tank hardware. The saltwell pump is equipped with a screen to eliminate debris from being trapped by the pump.

Level 2 Specification Section	Requirement or Objective	Comments
3.2.1.6	The 241-S-112 WRS shall monitor and control the process for retrieving waste from tank 241-S-112.	**This requirement is met at a conceptual level.** The monitoring and control parameters will be monitored by the PIC skid and/or the existing system at the 242-S building, as appropriate. A link between monitoring systems will be established.
3.2.1.6.1	Waste removal process parameters (e.g., waste transfer line pressures, flow rates, waste densities), environmental safety parameters (e.g., leak detection), and pertinent equipment parameters shall be monitored and controlled for safe and effective operation of the 241-S-112 WRS.	**This requirement is met at a conceptual level.** The subject parameters will be monitored by the PIC skid and/or the existing system at the 242-S building, as appropriate. A link between monitoring systems will be established.
3.2.1.6.1.a	The 241-S-112 WRS shall be designed to provide the required output signals (e.g., temperature and level) to the Master Monitor and Control System (see Figure 3-2) in a protocol compatible with that system.	**This requirement is met at a conceptual level.** Signals from both Tanks S-112 (via the PIC skid) and SY-102 will be received at the MMCS.
3.2.1.6.1.b	The 241-S-112 WRS shall be operated and monitored from a control station outside the S farm fence or at the pumping instrumentation and control skid. Manually operated valves may be included in the 241-S-112 WRS design.	**This requirement is met *in part* at a conceptual level.** For convenience of operations and consistency with previous saltwell practices, the saltwell skid will be located inside the fence, near Tank S-112. However, monitoring will be done remotely via an interface with the MMCS.
3.2.1.6.1.c	The 241-S-112 WRS shall be capable of providing real time video monitoring of in-tank retrieval operations.	**This requirement is met at a conceptual level.** A CCTV camera will be located in riser 6.
3.2.1.6.1.d	The 241-S-112 WRS shall include features to shut down waste retrieval pumps and primary motive power on any failure of the primary containment of any out-of-tank waste handling, transfer, or storage facilities.	**This requirement is met *in part* at a conceptual level.** Existing transfer lines will drain to pits and follow pit drains back to the respective tank. This is not true for the section of temporary hose-in-hose pipe.
3.2.1.6.1.e	The 241-S-112 WRS shall have an emergency stop feature that will shut down waste retrieval pumps and primary motive power.	**This requirement is met at a conceptual level.** A shutdown of the waste retrieval system will be located at the PIC skid as well as the 242-S Evaporator.
3.2.1.6.1.f	If active ventilation is required,the 241-S-112 WRS shall include features to support shut down of the 241-S-112 ventilation upon detection of unfiltered releases from tank 241-S-112. See Sections 3.3.6.3.3 and 3.3.6.3.4.	**This requirement is met at a conceptual level.** The existing exhauster is equipped with safety shutdown interlocks that satisfy this requirement.
3.2.1.6.1.g	The 241-S-112 WRS design shall include provisions to allow logging or recording of parameters necessary for successful operation of the WRS. These parameters will defined during conceptual and detailed design (TBD-RPP-8465.)	**This requirement is met at a conceptual level.** All anticipated control and monitoring parameters have the capability to be recorded and/or logged.
3.2.1.6.2	The 241-S-112 WRS design shall be capable of detecting liquid waste releases from 241-S-112 during all waste removal operations	**This requirement is met at a conceptual level.**

Level 2 Specification Section	Requirement or Objective	Comments
3.2.1.6.2.a	The 241-S-112 WRS design shall have a probability of leak detection of 95% and a probability of false alarm less than or equal to 5%.	**This requirement is met at a conceptual level.**
3.2.6.1.2.b	The leak detection method or combination of methods shall be designed to be functional during all retrieval operations.	**This requirement is met at a conceptual level.**
3.2.1.6.3	The Leak Detection, Monitoring and Mitigation monitoring system shall quantify liquid waste release volumes from an SST if a release is detected during waste retrieval operations.	**This requirement is met at a conceptual level.**
3.2.1.7	The 241-S-112 WRS design shall allow for measuring and calculating the residual waste in 241-S-112 to evaluate the tank 241-S-112 WRS effectiveness. Waste on the walls of the tank, on and under the stiffening rings attached to the walls of the tank, on the exterior surfaces of in-tank debris, hardware, and components, and on the bottom of the tank shall be measured, as necessary. The method for measuring/calculating residual waste may be by volume, chemical constituents, or radionuclides.	**This requirement is met *in part* at a conceptual level.** A CCTV camera will be used to estimate the degree of retrieval effectiveness. Mass flow monitoring and initial tank waste volume information will increase the accuracy of this estimate.
3.2.1.8	The 241-S-112 WRS shall be designed to mitigate leaks as the primary means of minimizing environmental impact caused by releases during retrieval. If a leak occurs, the release shall be evaluated and the appropriate actions implemented.	**This requirement is met at a conceptual level.** The preliminary LDMM strategy described in the PER identifies steps to be taken during retrieval activities to mitigate tank leaks (e.g., minimizing the amount of liquids in the SST during retrieval).
3.2.2, 1st bullet	The 241-S-112 WRS may impose axial loads on 4 in. risers not to exceed 227 kg (500 lb), or impose moments not to exceed 339 N.m (250 ft-lbs) (TBR, see Appendix A remarks).	**This requirement is met at a conceptual level.** Detailed calculations will be performed in conceptual design, but engineering judgment indicates that these levels will not be exceeded.
3.2.2, 2nd bullet	The 241-S-112 WRS may impose axial loads on 12 in. or larger risers of no more than 1362 kg (3000 lb) or impose a moment of no more than 2034 N.m (1,500 ft-lbs) (TBR, see Appendix A remarks).	**This requirement is met at a conceptual level.** Detailed calculations will be performed in conceptual design, but engineering judgment indicates that these levels will not be exceeded.
3.2.2, 3rd bullet	The bottom surface of tank 241-S-112 may be used to support in-tank equipment. The maximum load imparted by the 241-S-112 WRS shall not exceed the value given by the formula: W = 2,190 x (load area diameter [cm.] + 10.8) (N) (W = 1,250 x (load area diameter [in.] + 4.25) (lbf.))	**This requirement is met at a conceptual level.** Detailed calculations will be performed in conceptual design, but engineering judgment indicates that these levels will not be exceeded.
3.2.2.1	The 241-S-112 WRS shall not exceed the maximum dome loading on existing SSTs and DSTs specified in HNF-IP-1266, Rev. 2.	**This requirement is met at a conceptual level.** Detailed calculations will be performed in conceptual design, but engineering judgment indicates that these levels will not be exceeded.
3.2.2.2	The 241-S-112 WRS shall not cause dome deflections greater than or equal to 0.61 cm (0.02 ft).	**This requirement is met at a conceptual level.** Detailed calculations will be performed in conceptual design, but engineering judgment indicates that these levels will not be exceeded.

Level 2 Specification Section	Requirement or Objective	Comments
3.2.3.1	241-S-112 WRS components shall consider the intended life of the component, if information is available, and its documented performance history in similar environments.	**This requirement is met at a conceptual level.** Detailed component selection will be performed in definitive design, but to the extent possible, major equipment has been specified using standards and sources used by tank farms engineering and operations personnel.
3.2.3.2	The 241-S-112 WRS design shall have the reliability and availability to meet the operational schedule.	**This requirement is met at a conceptual level.** Detailed component selection will be performed in definitive design, but to the extent possible, major equipment has been specified using standards and sources used by tank farms engineering and operations personnel. The majority of the equipment is familiar to saltwell operations personnel; the schedule of activities is understood.
3.2.3.3	The 241-S-112 WRS shall be operational (i.e., available) to perform pre-operational testing through the retrieval campaign, a total of which consists of (TBD-RPP-8466) days.	**This requirement is met at a conceptual level.** The equipment installed for Tank S-112 will be ready for operation in the time frame required.
3.2.3.4	In-tank, in-pit and critical components that cannot be repaired or replaced remotely shall be designed to achieve a minimum of 2 years between failures with no maintenance anticipated during the 2-year period.	**This requirement is met at a conceptual level.** Detailed component selection will be performed in definitive design, but to the extent possible, major equipment has been specified using standards and sources used by tank farms engineering and operations personnel.
3.2.3.5	The 241-S-112 WRS above-grade active components shall have a minimum design life of three years with or without preventative maintenance, regardless of operation.	**This requirement is met at a conceptual level.** Detailed component selection will be performed in definitive design, but to the extent possible, major equipment has been specified using standards and sources used by tank farms engineering and operations personnel.
3.2.4	The 241-S-112 WRS components, to the extent practical, shall be of modular design for removal, repair, or replacement.	**This requirement is met at a conceptual level.** Detailed component selection will be performed in definitive design, but to the extent possible, major equipment has been specified using standards and sources used by tank farms engineering and operations personnel.
3.2.5.1.a	The 241-S-112 WRS shall be designed for the natural environmental conditions specified in HNF-SD-GN-ER-501, Rev. 1. Guidance on the application of HNF-SD-GN-ER-501 to the 241-S-112 WRS will be provided to the architect and engineer under a separate cover.	**This requirement is met at a conceptual level.** Engineering judgment indicates that this requirement can be met. Detailed component selection will be performed in definitive design.

Level 2 Specification Section	Requirement or Objective	Comments
3.2.5.1.b	The 241-S-112 WRS shall be designed to withstand the natural phenomena hazards as specified in HNF-IP-0842, Volume IV, Section 3.14. Guidance on the application of HNF-IP-0842, Volume IV, Section 3.14 to the 241-S-112 WRS will be provided to the architect and engineer under a separate cover.	**This requirement is met at a conceptual level.** Engineering judgment indicates that this requirement can be met. Detailed component selection will be performed in definitive design.
3.2.5.2.1	241-S-112 WRS equipment in contact with the tank waste shall be designed to perform its intended function in the chemical environment in the tanks. This environment and its context is described in HNF-SD-WM-SP-012, Rev. 2, Appendix B.	**This requirement is met at a conceptual level.** Detailed component selection will be performed in definitive design, but to the extent possible, major equipment has been specified using standards and sources used by tank farms engineering and operations personnel
3.2.5.2.2.a	The 241-S-103 WRS shall be designed for operating in the following 241-S-103 in-tank environmental conditions: In-tank radiation dose rate: defined in RPP-7515, Rev. 0 include: • The penetrating dose at the waste surface is estimated to be 83 rad/hr. • The nonpenetrating dose at the waste surface is estimated to be 765 rad/hr. • Dose rates to equipment submerged in the waste material would be roughly double the surface numbers. • The primary nuclide gamma energy is ^{137}Cs at 0.667 MeV.	**This requirement is met at a conceptual level.** Detailed component selection will be performed in definitive design, but to the extent possible, major equipment has been specified using standards and sources used by tank farms engineering and operations personnel
3.2.5.2.2.b	The 241-S-112 WRS shall be designed for operating in the following 241-S-112 in-tank environmental conditions: In-tank humidity range: 10 to 100 percent	**This requirement is met at a conceptual level.** Detailed component selection will be performed in definitive design, but to the extent possible, major equipment has been specified using standards and sources used by tank farms engineering and operations personnel
3.2.5.2.2.c	The 241-S-112 WRS shall be designed for operating in the following 241-S-112 in-tank environmental conditions: Liquid Waste pH range: 13.48 to 13.65. (prior to dilution)	**This requirement is met at a conceptual level.** Detailed component selection will be performed in definitive design, but to the extent possible, major equipment has been specified using standards and sources used by tank farms engineering and operations personnel
3.2.5.2.2.d	The 241-S-112 WRS shall be designed for operating in the following 241-S-112 in-tank environmental conditions: Temperature range: see 3.2.1.1.a	**This requirement is met at a conceptual level.** Detailed component selection will be performed in definitive design, but to the extent possible, major equipment has been specified using standards and sources used by tank farms engineering and operations personnel

Level 2 Specification Section	Requirement or Objective	Comments
3.2.5.2.2.e	The 241-S-112 WRS shall be designed for operating in the following 241-S-112 in-tank environmental conditions: Vapor space Pressure: See Section 3.2.1.3 (Note that operation will not continue at positive tank pressures, but the system may be subjected to them).	**This requirement is met at a conceptual level.** Detailed component selection will be performed in definitive design, but to the extent possible, major equipment has been specified using standards and sources used by tank farms engineering and operations personnel
3.2.5.2.2.f	The 241-S-112 WRS shall be designed for operating in the following 241-S-112 in-tank environmental conditions: Flammable Gas: Detectable levels of ammonia, hydrogen, nitrogen dioxide, non-methane organic compounds, methanol, ethanol, acetone, toluene, and 3-methyl-hexane are contained in 241-S-112. Ammonia was the only analyte with a result greater than the notification level of 150 ppmv.	**This requirement is met at a conceptual level.** Detailed component selection will be performed in definitive design, but to the extent possible, major equipment has been specified using standards and sources used by tank farms engineering and operations personnel.
3.2.5.2.3	The system shall be designed to minimize degradation of components caused by aerosol generation during operation of the 241-S-112 WRS.	**This requirement is met at a conceptual level.** The only aerosols expected to be generated will be due to the sprinklers. Detailed component selection will be performed in definitive design, but to the extent possible, major equipment has been specified using standards and sources used by tank farms engineering and operations personnel.
3.2.6	Upon delivery, the 241-S-112 WRS shall be designed to be transportable to and around the Hanford Site, to the extent possible, using existing Hanford rigging and transport equipment.	**This requirement is met at a conceptual level.** The modular design of WRS components will facilitate transportation to and around the Hanford Site using existing hoisting and rigging equipment.
3.2.7	The 241-S-112 WRS design shall consider features that allow for the operational flexibility to transfer tank 241-S-112 contents to any 241-SY Tank Farm DST receiver.	**This requirement is met at a conceptual level.** The destination DST for the S-112 waste can be modified by altering the jumper configuration in the SY-A Valve Pit.
3.2.8	The 241-S-112 WRS mobilization subsystem shall be designated to be capable of being relocated to another Hanford SST for waste retrieval operations with existing Hanford Site rigging and transport equipment.	**This requirement is met at a conceptual level.** The modular design of WRS components will facilitate relocation of these WRS to alternate locations as required.
3.3.1.1	The 241-S-112 WRS shall not add any material that will prohibit waste transfer from tank 241-S-112 to tank SY DST receiver tank in accordance with HNF-SD-WM-OCD-015, Rev. 3a.	**This requirement is met at a conceptual level.** Detailed mass balance calculations will be developed during definitive design.
3.3.1.2.1	241-S-112 WRS process piping shall be designed to preclude radioactive waste from being siphoned from tank the SY DST to 241-S-112.	**This requirement is not met.** Current saltwell pumping practices do not employ this design feature.

Level 2 Specification Section	Requirement or Objective	Comments
3.3.1.2.2	241-S-112 WRS process piping shall conform, as a minimum, to the requirements of ASME B31.3, Chemical Plant Petroleum Refinery Piping, for normal service fluid.	**This requirement is met at a conceptual level.** Detailed material selection will be performed in conceptual design, but to the extent possible, major equipment has been specified using standards and sources used by tank farms engineering and operations personnel.
3.3.1.2.3	Flexible piping, if used, shall be designed to perform the safety functions and satisfy the requirements described in HNF-SD-WM-SAR-067, Section 4.4.1.	**This requirement is met at a conceptual level.** The existing OGT line design employed in this design has been evaluated previously for compliance to the SAR.
3.3.1.3	The 241-S-112 WRS shall have features that preclude contamination of the raw water system with tank contents.	**This requirement is met at a conceptual level.** The existing raw water supply employs double back flow prevention.
3.3.1.3.1	The 241-S-112 WRS raw water backflow prevention systems physically connected to active water transfer system components shall be designed to be operable during transfers.	**This requirement is met at a conceptual level.** Detailed material selection will be performed in conceptual design, but to the extent possible, major equipment has been specified using standards and sources used by tank farms engineering and operations personnel.
3.3.1.3.2	The 241-S-112 WRS backflow prevention devices shall be Washington State approved models and be accessible for inspection by a water purveyor in a non-radiation zone.	**This requirement is met at a conceptual level.** Detailed material selection will be performed in conceptual design, but to the extent possible, major equipment has been specified using standards and sources used by tank farms engineering and operations personnel.
3.3.1.4.a	Lead shall not be used in the 241-S-112 WRS unless fully encapsulated and identified with a permanent tag.	**This requirement is met at a conceptual level.** Detailed material selection will be performed in conceptual design, but to the extent possible, materials have been specified using standards and sources used by tank farms engineering and operations personnel. There is currently no plan to use lead in this design.
3.3.1.4.b	Materials regulated by 40 CFR Subchapter R shall not be used in the design of the 241-S-112 WRS.	**This requirement is met at a conceptual level.** Detailed material selection will be performed in conceptual design. This requirement will be satisfied when equipment is procured.
3.3.1.4.c	Hydraulic fluid used in the designed in-tank equipment shall be approved by CHG.	**This requirement is met at a conceptual level.** Detailed material selection will be performed in conceptual design, but to the extent possible, materials have been specified using standards and sources used by tank farms engineering and operations personnel. There is currently no plan to use hydraulic fluid in this design.

Level 2 Specification Section	Requirement or Objective	Comments
3.3.1.4.d	The maximum credible loss of fluid in an accident scenario shall by design be less than 285 L (75 gal).	**This requirement is met at a conceptual level.** Detailed material selection will be performed in conceptual design, but to the extent possible, materials have been specified using standards and sources used by tank farms engineering and operations personnel. There is currently no plan to use hydraulic fluid in this design.
3.3.1.5	The 241-S-112 WRS and its subsystems shall be designed in accordance with the performance and design requirements of ASME N509 and ASME AG-1.	**This requirement is met at a conceptual level.** More detailed implementation of this requirement will occur during conceptual and definitive design.
3.3.1.6	All electrical equipment used in the 241-S-112 WRS design shall be listed, or labeled, by a nationally recognized testing laboratory such as Underwriters' Laboratory. Equipment without a listing mark by a nationally recognized testing laboratory is not approved for use in a design unless a nationally recognized testing laboratory category for that type of equipment does not exist. If a category for that equipment does not exist, the equipment may be approved for use only if accepted by one of the designated National Electrical Code inspectors appointed by the Hanford Electrical Codes Board.	**This requirement is met at a conceptual level.** Detailed material selection will be performed in conceptual design, but to the extent possible, materials have been specified using standards and sources used by tank farms engineering and operations personnel.
3.3.2	The 241-S-112 WRS shall comply with electromagnetic radiation emission requirements set forth in HNF-2962, Rev. 0.	**This requirement is met at a conceptual level.** Detailed material selection will be performed in conceptual design.
3.3.3	The 241-S-112 WRS shall label new equipment and/or modifications to existing equipment in a standardized format in accordance with the tank farm labeling program as specified in HNF-IP-0842, Volume II, Section 6.1.	**This requirement is not met.** This requirement is not applicable to preliminary engineering.
3.3.4	The requirements for workmanship are to be addressed in lower level design documentation (drawings, procurement specifications, etc.) created by the project.	**This requirement is not met.** This requirement is not applicable to preliminary engineering.
3.3.5	The 241-S-112 WRS design shall incorporate standardization of like-function components, as practical.	**This requirement is met at a conceptual level.** Detailed material selection will be performed in conceptual design, but to the extent possible, equipment has been specified using standards and sources used by tank farms engineering and operations personnel.
3.3.6.1.1	The 241-S-112 WRS shall be designed to protect workers from occupational radiation exposures in accordance with the requirements contained in HNF-5183, Rev. 0.	**This requirement is met at a conceptual level.** The equipment is capable of being monitored remotely, and the simple design will keep operator exposure to ALARA levels.
3.3.6.1.2	The 241-S-112 WRS design shall keep personnel exposures as low as reasonably achievable (ALARA).	**This requirement is met at a conceptual level.** The equipment is capable of being monitored remotely, and the simple design will keep operator exposure to ALARA levels.

Level 2 Specification Section	Requirement or Objective	Comments
3.3.6.1.3	The 241-S-112 WRS shall incorporate design features that comply with the requirements of 29 CFR 1910, Subparts D, E, G, H, J, L, M, O and S , in accordance with HNF-IP-0842, Volume IX, Section 1.1, Rev. 3.	**This requirement is met at a conceptual level.** The latest saltwell PIC skid design is being used; the design is the culmination of several years of improvements made from operations' input. As such, the Integrated Safety Management System (ISMS) approach is implicitly integrated into a major portion the design.
3.3.6.2	The 241-S-112 WRS shall be designed to avoid damage to other components.	**This requirement is met at a conceptual level.** To the extent possible, the waste retrieval system will be a standalone system, having a minimum physical interface with other components. The system operates at very low flow and pressures and will not overstress in-tank hardware. There are very few moving parts in the retrieval system.
3.3.6.2.1	The 241-S-112 WRS design shall analyze resonant frequencies particular to such components as the pump installation. The design of sprinklers/nozzles, suspended through risers to preclude damage to the tank structure from resonant frequencies, will also be designed to eliminate vibration problems such as the harmonics in the pump's normal operating range.	**This requirement is met at a conceptual level.** Detailed material selection will be performed in conceptual design, but to the extent possible, equipment has been specified using standards and sources used by tank farms engineering and operations personnel. The analyses identified in this requirement are not required during the preliminary engineering stage of design.
3.3.6.2.2	The 241-S-112 WRS shall be designed to ensure proper structural strength, compatibility with waste and protection against corrosion in accordance with 40 CFR 265.192, WAC 173-303-640(3).	**This requirement is met *in part* at a conceptual level.** Some degree of cathodic protection exists already within the S-Farm and SY-Farm areas for underground lines. Overground lines do not need cathodic protection, since the piping is considered temporary and will be removed upon successful completion of waste transfer. Since the line between S-Farm and SY-Farm will become non-compliant after 2005, detailed permitting requirements will have to be examined as a part of conceptual design.
3.3.6.2.3	The 241-S-112 WRS shall meet fire protection design requirements as defined in HNF-IP-0842, Volume IX, Section 5.2 and DOE-STD-1066-99, where applicable.	**This requirement is met at a conceptual level.** Engineering judgment indicates that there will be sufficient instrumentation and controls to maintain the waste retrieval system within the subject standards' guidelines. In conceptual design, when complete cost information is available, an analysis will be performed to assess whether a fire suppression system is merited financially.
3.3.6.2.4	The 241-S-112 WRS shall not adversely affect the function of the DST System nor exceed the DST design limits specified in HNF-SD-WM-TRD-007, Rev. 0.	**This requirement is met at a conceptual level.**

Level 2 Specification Section	Requirement or Objective	Comments
3.3.6.2.5	The 241-S-112 WRS design and operation shall consider the operational limits of the DST receiver tank specified in OSD-T-151-00007.	**This requirement is met at a conceptual level.**
3.3.6.3.1	The 241-S-112 WRS shall incorporate secondary containment and leak-detection design features in accordance with 40 CFR 264.193, WAC 173-303-640 (4), and DOE Order 5820.2A, Chapter 1, Section 3.B(2) and (3).	**This requirement is met *in part* at the conceptual level.** Hose-in-hose and leak detection systems will be employed as shown on drawings 4412-70-MDWG-101 and 4412-70-PDWG-102. However, the existing transfer line between S-Farm and SY-Farm will become non-compliant after 2005, and related specific permitting issues will be addressed in conceptual design.
3.3.6.3.2	The 241-S-112 WRS shall incorporate spill prevention and control design features in accordance with 40 CFR 264.193 and WAC 173-303-640 (5).	**This requirement is met *in part* at the conceptual level.** Hose-in-hose and leak detection systems will be employed as shown on drawings 4412-70-MDWG-101 and 4412-70-PDWG-102. However, the existing transfer line between S-Farm and SY-Farm will become non-compliant after 2005, and related specific permitting issues and control strategies will be addressed in conceptual design.
3.3.6.3.3	The 241-S-112 WRS shall be designed to comply with the nonradioactive airborne emissions requirements contained in WAC 173-400 and WAC 173-460. Also, non-radioactive airborne emissions from the 241-S Tank Farm, other tank farms, and other Hanford Site major facilities will be considered when designing the system to be compliant with WAC 173-400 and WAC 173-460.	**This requirement is met *in part* at the conceptual level.** The existing flammable gas monitors detect small quantities of flammable gasses, including flammable organic vapors. Upon detection, appropriate measures will be undertaken. Monitoring for non-flammable gasses and/or gas filtration/scrubbing has not been addressed at this point in the design. Detailed monitoring and permitting issues will be examined during conceptual design.
3.3.6.3.4	The 241-S-112 WRS shall be designed to comply with the radioactive airborne emissions requirements contained in HNF-IP-0842, Volume VI, Section 1.7, Air Quality – Radioactive Emissions." Also, radioactive airborne emissions from the 241-S Tank Farm, other tank farms, and other Hanford Site major facilities will be considered when designing the system to be compliant with HNF-IP-0842, Volume VI, Section 1.7.	**This requirement is met at a conceptual level.** The exhauster HEPA filter will restrict particulate emissions, and a CAM will alarm on detection of radioactive airborne particulate in the stack and initiate a shutdown of waste retrieval operations.
3.3.6.3.5	The system shall be designed in accordance with the radiation release limits specified in 10 CFR 20 and WAC 246-247.	**This requirement is met at a conceptual level.** The exhauster HEPA filter will restrict particulate emissions, and a CAM will alarm on detection of radioactive airborne particulate in the stack. Leak detection will be employed in pump and valve pits.

Level 2 Specification Section	Requirement or Objective	Comments
3.3.6.3.6	The design of the 241-S-112 WRS shall comply with HNF-SD-WM-TSR-006, Rev. 2 and HNF-IP-1266, Rev. 2, Administrative Control 5.10, or demonstrate safety requirements equivalent to those set forth in these requirements through evaluation by the Flammable Gas Equipment Advisory Board. Interpretation of applicability to the ignition set controls No. 1 and 2 shall be determined by the Flammable Gas Equipment Advisory Board.	**This requirement is met at a conceptual level.** The existing flammable gas monitors detect small quantities of flammable gasses in Tank S-112 and in the central pump pit. Detailed material and equipment selection will be performed in definitive design.
3.3.7	The 241-S-112 WRS shall be designed for compliance with DOE Order 6430.1A, Section 1300-12, "Human Factors Engineering."	**This requirement is met at a conceptual level.** The waste retrieval system is patterned after saltwell operations and associated equipment to assure familiarity and ease of operations.
3.3.8	The 241-S-112 WRS shall be designed for ease of decontamination during operation and for decommissioning at the end of system life in accordance with DOE Order 6430.1A, Sections 0110-99.0.1, 0205-2, and 1300-11. • Waste Pipe Gravity Drain. The 241-S-112 WRS process piping systems will minimize free standing liquids in the process piping. Gravity drains will be used where appropriate to avoid the presence of traps in radioactive waste lines. • WRS In-Tank Equipment Decontamination Fluid. The 241-S-112 WRS in-tank equipment will use water or CHG approved solution as the decontamination fluid.	**This requirement is met *in part* at a conceptual level.** All new equipment that is external to the tank is modular, above ground, and intended to be temporary for the life of the demonstration. All in-tank equipment is intended to be easily inserted and extracted from the tank risers. As such, the design does not preclude decommissioning or disposal of equipment. Other than the removal of temporary items, this project has not explicitly included decontamination options into the design, nor has it included cost estimates that included decontamination or decommissioning activities.
3.3.8.1	The 241-S-112 WRS shall be designed to be retrievable from the tank in the event of failure.	**This requirement is met *in part* at a conceptual level.** All in-tank equipment is intended to be easily inserted and extracted from the tank risers. As such, the design does not preclude decommissioning or disposal of equipment. Other than the removal of temporary items, this project has not explicitly included decontamination options into the design, nor has it included cost estimates that included decontamination or decommissioning activities.
3.3.8.2	The 241-S-103 WRS in-tank equipment shall be designed to be removed after waste retrieval operations are complete.	**This requirement is met *in part* at a conceptual level.** All in-tank equipment is intended to be easily inserted and extracted from the tank risers. As such, the design does not preclude decommissioning or disposal of equipment. Other than the removal of temporary items, this project has not explicitly included decontamination options into the design, nor has it included cost estimates that included decontamination or decommissioning activities.

Level 2 Specification Section	Requirement or Objective	Comments
3.3.9.1	The 241-S-112 WRS shall be designed to store, transfer, and transport radionuclides in a manner that prevents criticality in accordance with HNF-IP-1266, Rev. 2, Section 5.7	**Unknown whether this requirement is met.** The solid radionuclide inventory should be verified by analysis of S-112 solids prior to dilution and transfer. Of particular interest will be the *insoluble* radionuclide inventory, which include the transuranics that will be left behind in the sludge in a more concentrated form.
3.3.9.2	The 241-S-112 WRS and its components shall be designed in accordance with the safety classification for each.	**This requirement is met at a conceptual level.** A preliminary safety classification has been developed for cost estimating purposes and is included in Appendix D. A more rigorous Safety Equipment List will be developed as a part of definitive design.
3.3.9.3	The 241-S-112-WRS and its components safety classification shall be determined using the process described in HNF-IP-0842, Volume IV, Section 6.12; Section 6.11; Section 6.10; and Section 6.9. The sections of HNF-IP-0842 are based on the guidelines in HNF-SD-WM-SAR-067, Section 3.	**This requirement is met at a conceptual level.** A preliminary safety classification has been developed for cost estimating purposes and is included in Appendix D. A more rigorous Safety Equipment List will be developed as a part of definitive design.
3.4.1.1	Records, documents, and drawings pertinent to design functions shall be controlled in accordance with RPP-PRO-222.	**This requirement is met at a conceptual level.** Document Control is in accordance with the HND QA manual (QAM-HN-01, Section 6), and the associated implementing procedure (QIP 401). These contract-used documents comply with equivalent sections ASME NQA-1 (1994) as well as 10 CFR 830.120.
3.4.1.2	Engineering documents shall be developed in accordance with HNF-IP-0842, Volume IV, Section 3.5.	**This requirement is met at a conceptual level.**
3.4.2	All SSCs shall be incorporated into the master equipment list in accordance with <TBD>.	**This requirement is met at a conceptual level.** A preliminary master equipment list has been prepared, including major structures, systems, and components (SSCs).
3.5.1.1	The 241-S-112 WRS operation shall be remote, wherever practical, to minimize exposure and contamination.	**This requirement is met at a conceptual level.** Detailed maintenance requirements will be addressed in conceptual design, but to the extent possible, the systems and equipment used in this design have been patterned after saltwell pumping operations. As such, existing maintenance procedures may apply or be easily modified.
3.5.1.2	The 241-S-112 WRS remote, limited, or contact maintenance requirements shall be implemented with current regulatory requirements, policies, and procedures.	**This requirement is met at a conceptual level.** Detailed maintenance requirements will be addressed in conceptual and detailed design, but to the extent possible, the systems and equipment used in this design have been patterned after saltwell pumping operations. As such, existing maintenance procedures may apply or be easily modified.

Level 2 Specification Section	Requirement or Objective	Comments
3.5.1.3	The 241-S-112 WRS corrective and preventive maintenance shall be performed by Hanford Site Crafts personnel, unless special circumstances require specific vendor maintenance support.	**This requirement is met at a conceptual level.** Detailed maintenance requirements will be addressed in conceptual and detailed design, but to the extent possible, the systems and equipment used in this design have been patterned after saltwell pumping operations. As such, existing maintenance procedures may apply or be easily modified.
3.5.1.4	The 241-S-112 WRS shall be designed to allow periodic calibration.	**This requirement is met at a conceptual level.** Detailed maintenance requirements will be addressed in conceptual design, but to the extent possible, the systems and equipment used in this design have been patterned after saltwell pumping operations. As such, existing calibration procedures may apply or be easily modified.
3.5.1.4.1	Calibration cycles, methods, and equipment shall be established based on manufacturer's instructions, component and system reliability, expected environmental conditions, and site-specific historical data.	**This requirement is met at a conceptual level.** Detailed maintenance requirements will be addressed in conceptual design, but to the extent possible, the systems and equipment used in this design have been patterned after saltwell pumping operations. As such, existing calibration procedures may apply or be easily modified.
3.5.1.4.2	The 241-S-112 WRS equipment located inside the SST, DST, or transfer-associated structure shall be designed to require no calibration after installation.	**This requirement is met at a conceptual level.** Detailed maintenance requirements will be addressed in conceptual design, but to the extent possible, the systems and equipment used in this design have been patterned after saltwell pumping operations. As such, existing calibration procedures may apply or be easily modified.
3.5.2	The minimum number of spares for like components shall be determined during design of the 241-S-112 WRS. The minimum number of spares will be determined based on information such as the mean time between failures, availability of backups, vendor recommendations, procurement lead times, operational strategy, safety classification and the number of like components installed, as practical.	**This requirement is met *in part* at a conceptual level.** Detailed component selection will be performed in definitive design, but to the extent possible, major equipment has been specified using standards and sources used by tank farms engineering and operations personnel.
3.5.3	In-tank hardware preventing or interfering with the installation and operation of the 241-S-112 WRS shall be considered for removal prior to retrieval operations.	**This requirement is met at a conceptual level.** Some risers will require equipment removed prior to installation of the retrieval system. A list of equipment that must be removed is included in the Outline Specification (Appendix B).
3.5.4	The 241-S-112 WRS shall comply with the requirements of HNF-IP-0842, Volume XVIII, Section 2.4, for solid waste generated as a result of system operations and maintenance.	**This requirement is met at a conceptual level.** Since the retrieval system is patterned after saltwell pumping operations, standard solid waste disposal procedures will be adequate to support the system operation.

Level 2 Specification Section	Requirement or Objective	Comments
3.6	The 241-S-112 WRS shall be designed to be operated, maintained, and managed by qualified personnel, trained to levels of training described in HNF-IP-0842, Volume III, Section 10.	**This requirement is met at a conceptual level.** Since the retrieval system will be is patterned after saltwell pumping operations, and will be operated and maintained by Interim Stabilization personnel, it is anticipated that there will be no significant personnel qualifications or training issues associated with the project.
3.9	The 241-S-112 WRS shall be designed such that access controls to radiation and high-radiation areas meet the requirements of HNF-5183, Rev. 0.	**This requirement is met at a conceptual level.** Since the retrieval system is patterned after saltwell pumping operations, standard RWPs will be adequate to support the system operation.
4.1	Design verification shall be performed on the 241-S-112 WRS as represented in design drawings, prototypes, engineering models, etc., for the purpose of verifying that the design meets the requirements stated in Section 3.0 of this specification.	**This requirement is not applicable at the pre-conceptual design stage of development.** Formal design verification of the preliminary engineering (pre-conceptual design) documentation is not required. This matrix is intended to satisfy the requirement for verification that the Level 2 Specifications requirements have been met by the current design.
4.1.1	The 241-S-112 WRS design verifications shall be conducted and documented by the design agent in accordance with the statement of work.	**This requirement is not applicable at the pre-conceptual design stage of development.** Design verification of the preliminary engineering (pre-conceptual design) documentation is not required, per the contract documents.
4.1.2.1	Selected major components of the 241-S-112 WRS (as determined through addressing requirement 4.2.3) shall be the subject of a system qualification test.	**This requirement is not applicable at the pre-conceptual design stage of development.** Qualification testing is not required as part of the preliminary engineering (pre-conceptual design) effort.
4.1.2.2	Tests used as design verifications shall be conducted at CHG facilities (e.g., Cold Test, Training and Mock-up [CTTM]) or at other facilities subject to CHG approval.	**This requirement is not applicable at the pre-conceptual design stage of development.** Design verification testing is not required as part of the preliminary engineering (pre-conceptual design) effort.
4.2	The 241-S-112 WRS design verifications shall be conducted in accordance with HNF-IP-0842, Volume IV, Section 4.24 and assure compliance with the requirements of this specification.	**This requirement is not applicable at the pre-conceptual design stage of development.** Design verification of the preliminary engineering (pre-conceptual design) documentation is not required, per the contract documents. This matrix is intended to satisfy the requirement for verification that the Level 2 Specifications requirements have been met by the current design.

Level 2 Specification Section	Requirement or Objective	Comments
4.2.1	The verification method applied to each specification requirement, and the rigor to which it is applied, shall be appropriate for the risks and complexity associated with each component or requirement.	**This requirement is not applicable at the pre-conceptual design stage of development.** Design verification of the preliminary engineering (pre-conceptual design) documentation is not required, per the contract documents. Formal design verification will be initiated as part of the conceptual design.
4.2.2	Verification of the subsystem design shall be performed by one or more of the following methods • **Qualification Testing**. • **Review**. • **Alternate Calculations**. At least one verification method will be specified for each 241-S-112 WRS requirement called out in Section 3 of this Level 2 Specification in a requirements verification matrix, which will be included in this document at the conclusion of conceptual engineering activities or be included in a lower level document.	**This requirement is not applicable at the pre-conceptual design stage of development.** Design verification of the preliminary engineering (pre-conceptual design) documentation is not required, per the contract documents. Identification of design verification methods applicable for each of the WRS requirements will be developed during the project's conceptual design phase.

Appendix F deleted

Appendix G **deleted**

Appendix H
Sketches

This page intentionally left blank.

PROJECT TITLE:

241-S-112 SALTCAKE DISSOLUTION DEMO.

FOR:

CH2M HILL HANFORD GROUP, INCORPORATED

BY:

HND TEAM

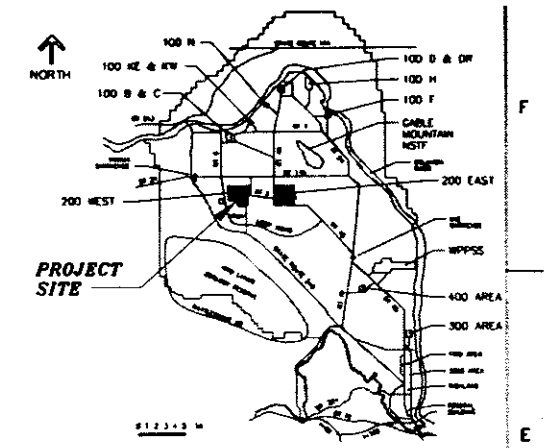

HANFORD AREA MAP

DRAWING LIST

CIVIL/STRUCTURAL

DRAWING NO.	TITLE
4412-070-CDWG-101	DRAWING LIST
4412-070-CDWG-102	SITE PLAN

MECHANICAL

DRAWING NO.	TITLE
4412-070-PDWG-101	SYMBOL LEGEND
4412-070-PDWG-102	PROCESS FLOW DIAGRAM
4412-070-PDWG-103	PROCESS & INSTRUMENTATION DIAGRAM
4412-070-MDWG-101	MECHANICAL/ELECTRICAL ENLARGED PLAN

ELECTRICAL

DRAWING NO.	TITLE
4412-070-EDWG-101	ELECTRICAL ONE LINE DIAGRAM PUMP & INSTRUMENT POWER SUPPLY
4412-070-EDWG-102	ELECTRICAL ONE LINE DIAGRAM PORTABLE EXHAUSTER POWER SUPPLY

INTERFACE CONTROL

DRAWING NO.	TITLE
4412-070-IDWG-101	INSTRUMENTATION INTERFACE CONTROL

PRECONCEPTUAL

NOT APPROVED FOR CONSTRUCTION

NO.	DATE	CLASS REV.	REVISIONS	DWN	DES	CHKD	REL	SUB	REC	APP

HND TEAM
Holmes & Narver/DMJM

241-S-112 SALTCAKE DISSOLUTION DEMONSTRATION PROJECT

DRAWING LIST

BLDG. 241-S/SY

FOR CH2M HILL HANFORD GROUP, INC.

DRWN	ARES CORP
DESIGN	
CHECKED	
RELEASED	
DATE	
SHEET	1 OF 1

ARES PROJECT ID	DRAWING NO.	REV.
9909232.01	4412-070-CDWG-101	0

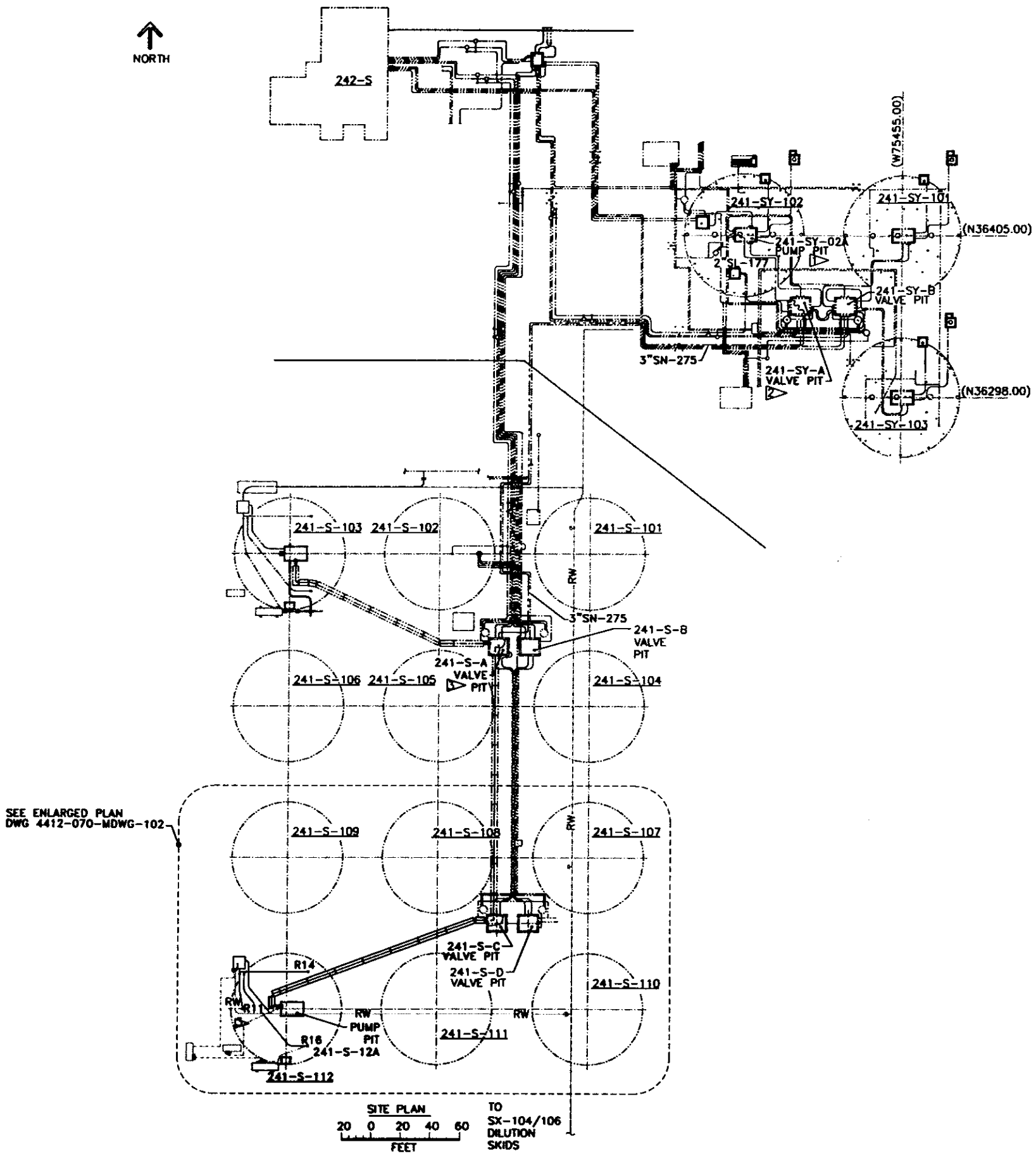

FLAG NOTES

1. USE EXISTING FLEX JUMPER CONNECTING WALL NOZZLE "B" TO EQUIPMENT NOZZLE "L" ON RISER 13.
2. USE EXISTING FLEX JUMPER CONNECTING WALL NOZZLE "L1" TO WALL NOZZLE "L9".
3. NEW FLEX JUMPER FROM NEW HOSE-IN-HOSE TO EXISTING MANIFOLD (SEE H-14-104150), EXISTING FLEX JUMPER FROM MANIFOLD TO EXISTING WALL NOZZLE "L-20".

PRECONCEPTUAL

NOT APPROVED FOR CONSTRUCTION

NO.	DATE	CLASS REV.	REVISIONS	DWN	DES	CHKD	REL	SUB	REC	APP

HND TEAM
Holmes & Narver/DMJM

241-S-112 SALTCAKE DISSOLUTION DEMONSTRATION PROJECT SITE PLAN BLDG. 241-S/SY	DRAWN ARES CORP DESIGN CHECKED RELEASED DATE
FOR CH2M HILL HANFORD GROUP, INC.	SHEET 1 OF 1
ARES PROJECT ID 9909232.01	DRAWING NO. 4412-070-CDWG-102 — REV. 0

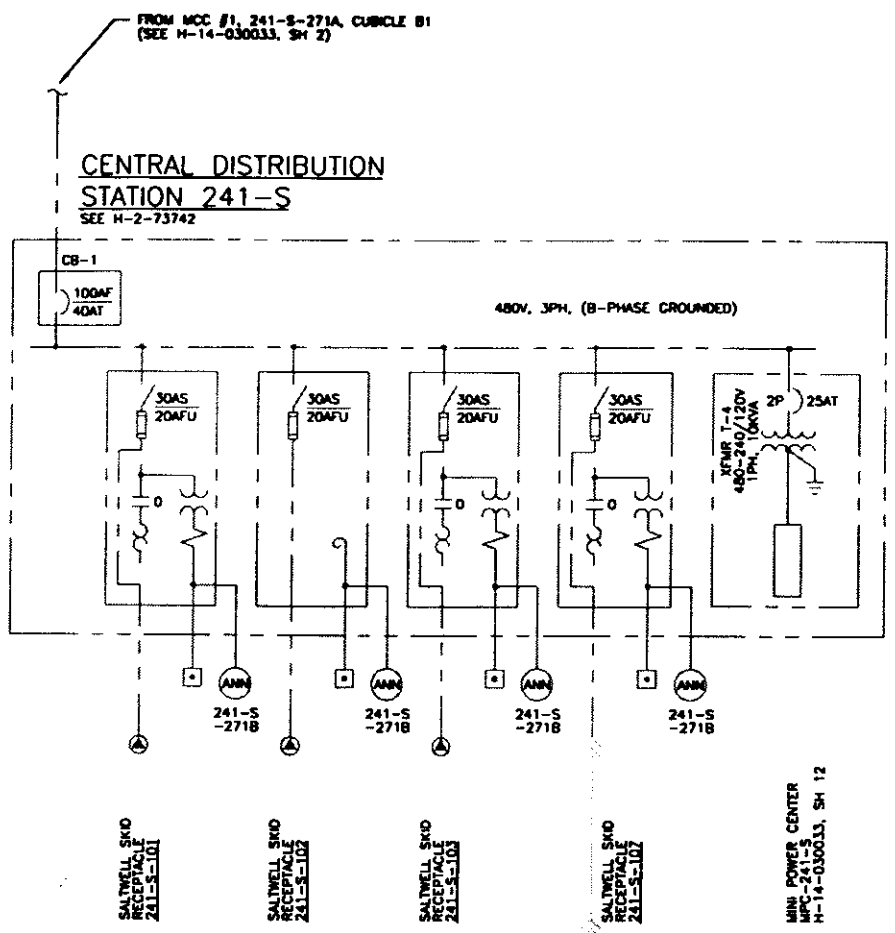

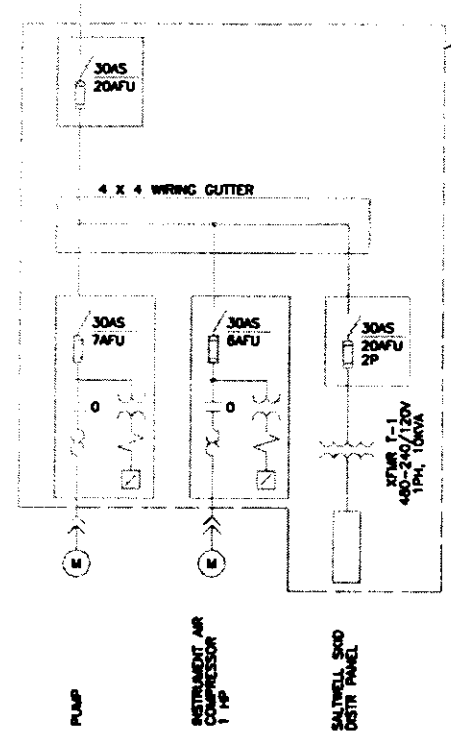

NEW SALTWELL SKID
(SEE H-14-104158-104163
FOR ASSEMBLY DETAILS)

ONE LINE DIAGRAM

NOTE:

1. SEE OUTLINE SPECIFICATION SECTION: 16400

LEGEND

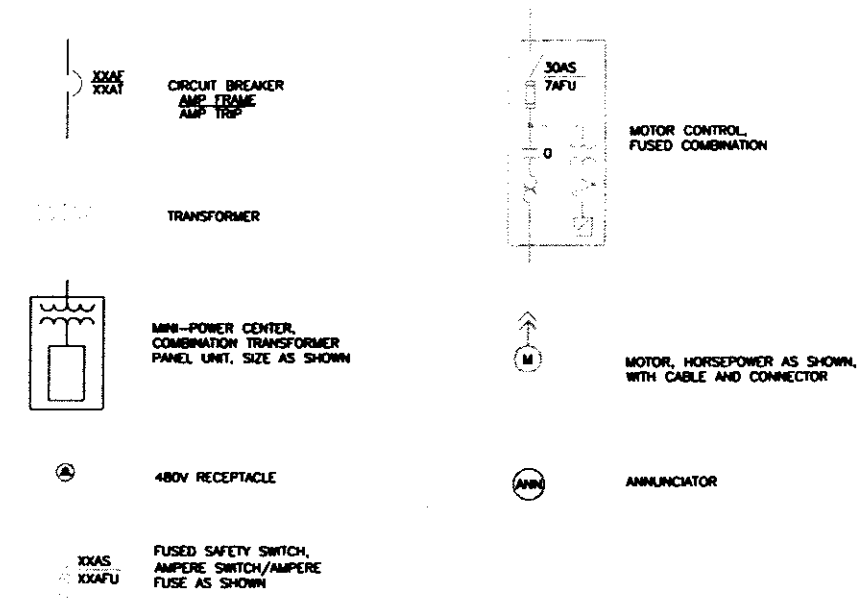

EXISTING EQUIPMENT

NEW EQUIPMENT

PRECONCEPTUAL

NOT APPROVED FOR CONSTRUCTION

NO.	DATE	CLASS REV.	REVISIONS	DWN	DES	CHKD	REL	SUB	REC	APP

HND TEAM
Holmes & Narver/DMJM

241-S-112 SALTCAKE DISSOLUTION DEMONSTRATION PROJECT

ELECTRICAL
ONE LINE DIAGRAM
PUMP & INSTRUMENT POWER SUPPLY

BLDG. N/A

DRAWN	ARES CORP
DESIGN	
CHECKED	
RELEASED	
DATE	

FOR: CH2M HILL HANFORD GROUP, INC.

SHEET 1 OF 1

ARES PROJECT ID	DRAWING NO.	REV.
9909232.01	4412-070-EDWG-101	0

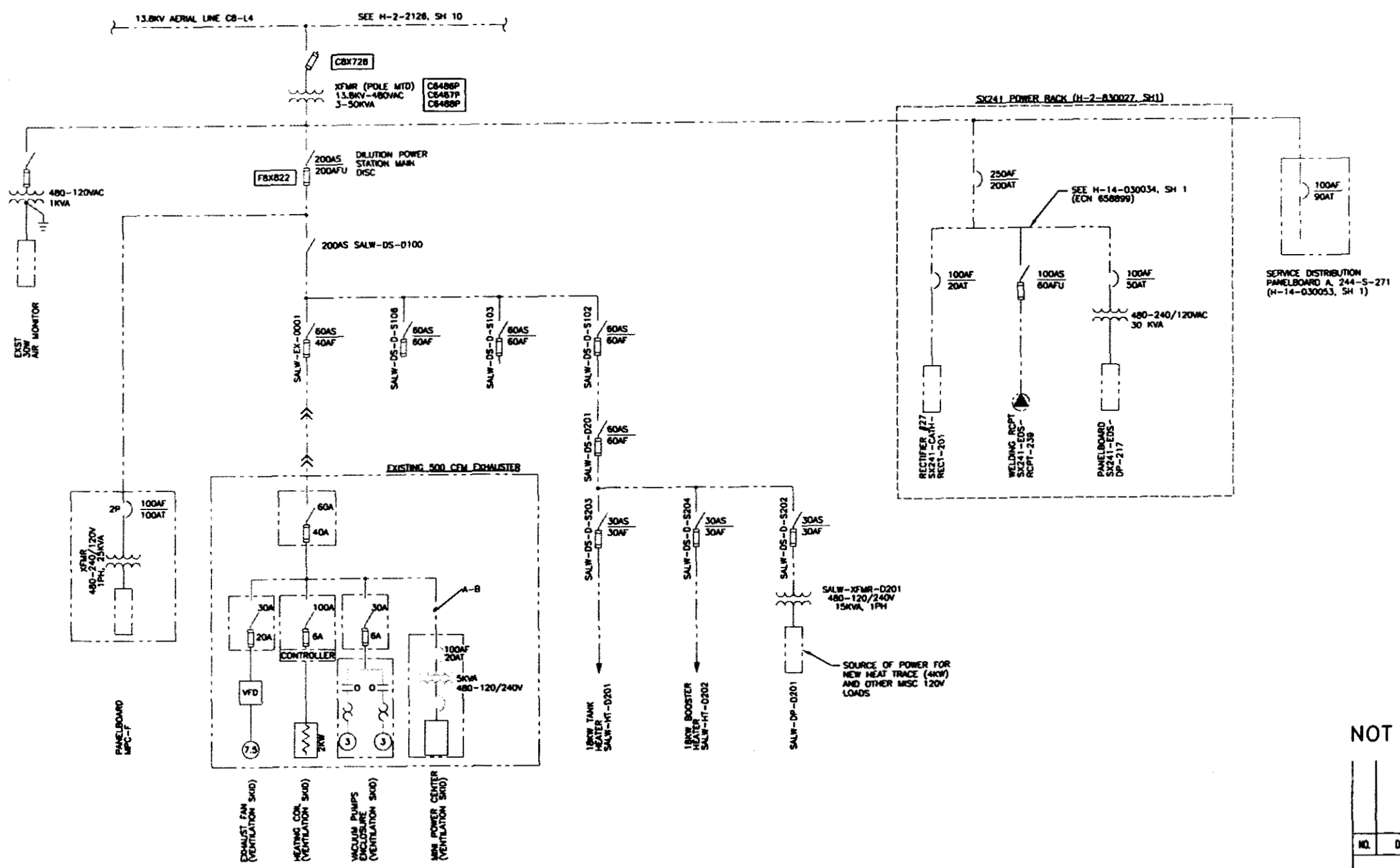

ONE LINE DIAGRAM

EXST S-FARM DILUTION SYSTEM

PRECONCEPTUAL

NOT APPROVED FOR CONSTRUCTION

NO.	DATE	CLASS REV.	REVISIONS	DWN	DES	CHKD	REL	SUB	REC	APP

HND TEAM
Holmes & Narver/DMJM

241-S-112 SALTCAKE DISSOLUTION DEMONSTRATION PROJECT

ELECTRICAL
ONE LINE DIAGRAM
PORTABLE EXHAUSTER POWER SUPPLY

BLDG. N/A

FOR CH2M HILL HANFORD GROUP, INC.

DRAWN	ARES CORP
DESIGN	
CHECKED	
RELEASED	
DATE	

SHEET 1 OF 1

ARES PROJECT ID 9909232.01

DRAWING NO. 4412-070-EDWG-102

REV. 0

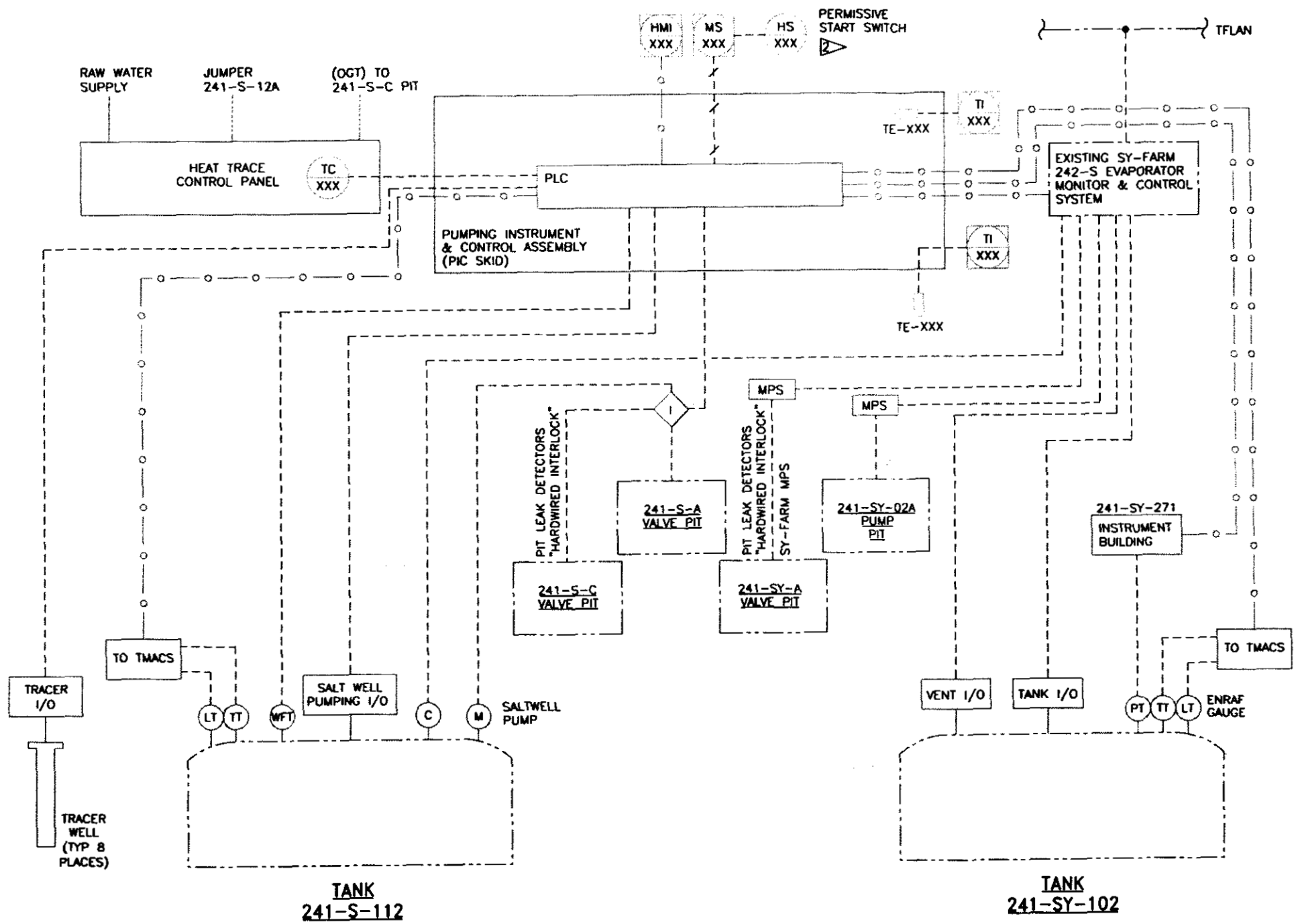

WASTE RETRIEVAL SYSTEM
MONITOR AND CONTROL SUBSYSTEM

NOTES:

1. SEE DRAWING 4412-070-PDWG-101 FOR SYMBOL LEGEND.

2. THE SELECTOR SWITCH, MODE "A-O-A" IS LOCATED ON THE MOTOR STARTER PANEL WHICH IS ONLY A PERMISSIVE START FOR THE JET PUMP.

PRECONCEPTUAL

NOT APPROVED FOR CONSTRUCTION

NO.	DATE	CLASS REV.	REVISIONS	DWN	DES	CHKD	REL	SUB	REC	APP

HND TEAM
Holmes & Narver/DMJM

241-S-112 SALTCAKE DISSOLUTION DEMONSTRATION PROJECT
INSTRUMENTATION INTERFACE CONTROL
BLDG. 241-S & 241-SY

DRAWN: ARES CORP
DESIGN
CHECKED
RELEASED
DATE

FOR: CH2M HILL HANFORD GROUP, INC.

SHEET 1 OF 1

ARES PROJECT ID	DRAWING NO.	REV.
9909232.01	4412-070-IDWG-101	0

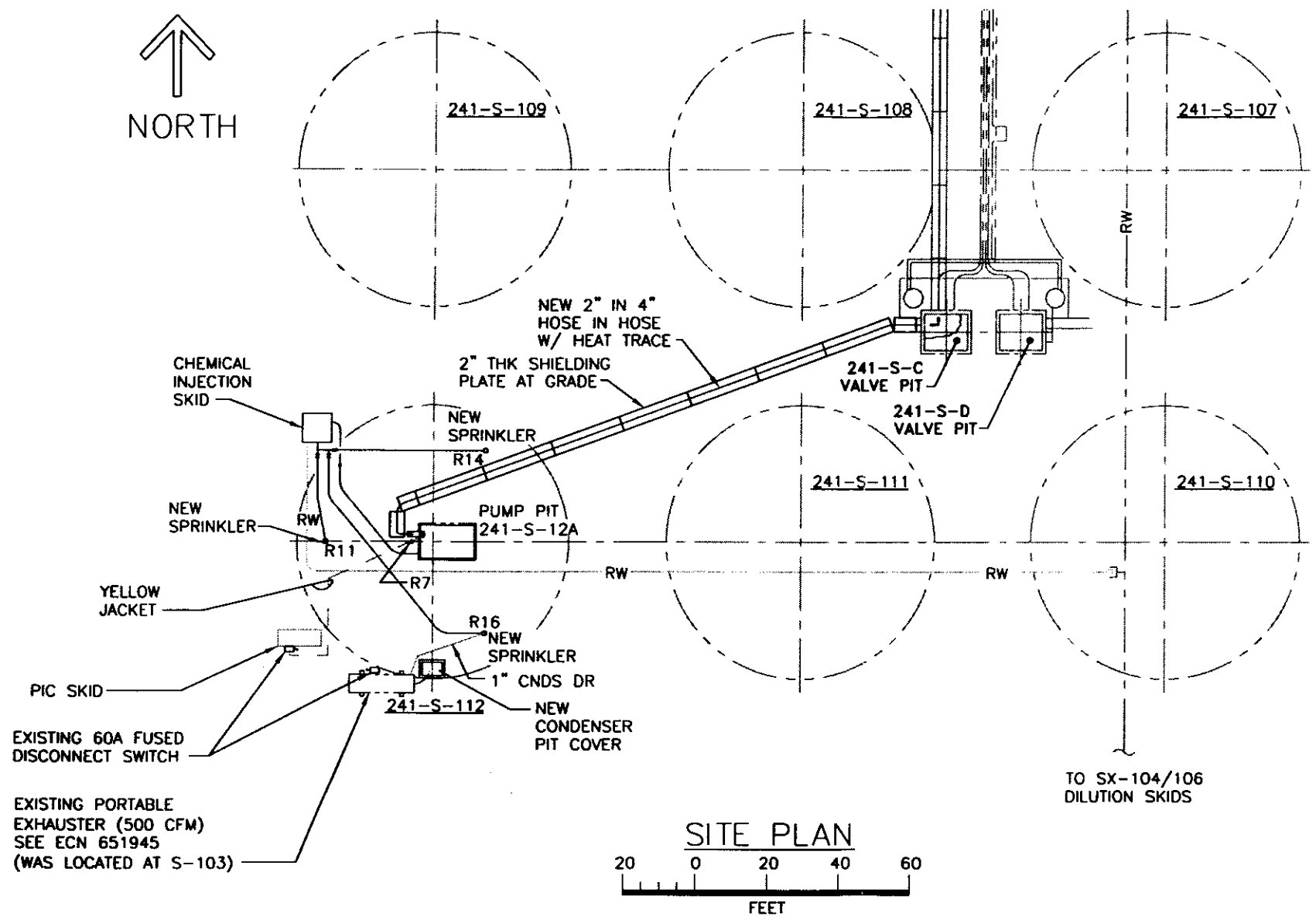

SITE PLAN

PRECONCEPTUAL

NOT APPROVED FOR CONSTRUCTION

NO.	DATE	CLASS REV.	REVISIONS	DWN	DES	CHKD	REL	SUB	REC	APP

HND TEAM
Holmes & Narver/DMJM

241-S-112 SALTCAKE DISSOLUTION DEMONSTRATION PROJECT

MECHANICAL/ELECTRICAL ENLARGED PLAN

AREA 241-S-112

FOR CH2M HILL HANFORD GROUP, INC.

DRAWN	ARES CORP
DESIGN	
CHECKED	
RELEASED	
DATE	
SHEET	1 OF 1

ARES PROJECT ID	DRAWING NO.	REV.
9909232.01	4412-070-MDWG-101	0

SYMBOL LEGEND

LINES:

- NEW
- DISCRETE SIGNAL
- ELECTRICAL POWER OR SIGNAL
- DATA LINK
- EXISTING PIPING OR EQUIPMENT
- PNEUMATIC INSTRUMENT SIGNAL

VALVES:

- GATE
- GLOBE
- CHECK
- BALL

VALVE ACTUATORS:

- DIAPHRAGM OPERATED (DOV)
- MOTOR OPERATED (MOV)

MEASURING ELEMENTS:

TE	TEMPERATURE ELEMENT
FE	FLOW ELEMENT
WFT	WEIGHT FACTOR TRANSMITTER
LDE	LEAK DETECTION ELEMENT

INSTRUMENT SYMBOLS

- PRIMARY ELEMENT OR LOCALLY MOUNTED INSTRUMENT
- ANNUNCIATOR CABINET OR PANEL MOUNTED INSTRUMENT
- INSTRUMENT MOUNTED ON BACK OF PANEL
- INSTRUMENT MOUNTED AT AN AUXILIARY LOCATION
- INTERLOCK
- COMPUTER FUNCTION
- MONITOR AND CONTROL SYSTEM (MCS) SHARED DISPLAY (VIDEO SCREEN) IN CONTROL ROOM
- PROGRAMMABLE LOGIC CONTROLLER PRIMARY LOCATION
- PROGRAMMABLE LOGIC CONTROLLER FIELD MOUNTED

ABBREVIATIONS:

I/O	INSTRUMENTATION/CONTROLS INPUTS & OUTPUTS	HMI	HUMAN MACHINE INTERFACE
PLC	PROGRAMMABLE LOGIC CONTROLLER	SHMS	STANDARD HYDROGEN MONITORING SYSTEM
TFLAN	TANK FARM LOCAL AREA NETWORK	LDE	LEAK DETECTOR ELEMENT
TC	TEMPERATURE CONTROLLER	LDK	LEAK DETECTOR RELAY
HS	HAND SWITCH	TMACS	TANK MONITORING AND CONTROL SYSTEM
MS	MOTOR STARTER	MPS	MASTER PUMP SHUTDOWN

MISCELLANEOUS SYMBOLS:

- HEPA FILTER
- LEVEL ELEMENT
- REMOTE JUMPER CONNECTOR (PIPE) OR WALL NOZZLE
- MOTOR
- BLIND FLANGE
- FLANGED CONNECTION
- QUICK CONNECT
- HEAT TRACE
- TEMPERATURE SENSING ELEMENT
- SPRAY NOZZLE
- FLOOR DRAIN
- CCTV

INSTRUMENT IDENTIFICATION:

ASSOCIATED EQUIPMENT NO. — XX / XXX — INSTRUMENT IDENTIFICATION

FOR I/O INTERFACE TO THE MCS: PCM NO. / MUX NO. / BOARD NO. / POINT NO. — MSC SHARED CONTROL OR DISPLAY

ASSOCIATED EQUIPMENT NO. — XX / XXX — INSTRUMENT IDENTIFICATION — PANEL MOUNTED INSTRUMENT

ELECTRICAL OR CONTROL SIGNAL

ASSOCIATED EQUIPMENT NO. — XX / XXX — INSTRUMENT IDENTIFICATION — LOCAL MOUNTED INSTRUMENT

PUMPS AND BLOWERS:

- BLOWER
- PUMP

PRECONCEPTUAL

NOT APPROVED FOR CONSTRUCTION

NO.	DATE	CLASS REV.	REVISIONS	DWN	DES	CHKD	REL	SUB	REC	APP

HND TEAM
Holmes & Narver/DNUM

241-S-112 SALTCAKE DISSOLUTION DEMONSTRATION PROJECT

SYMBOL LEGEND

AREA 241-S-103, 241-SY-102

FOR CH2M HILL HANFORD GROUP, INC.

DRAWN	ARES CORP
DESIGN	
CHECKED	
RELEASED	
DATE	
SHEET	1 OF 1

ARES PROJECT ID	DRAWING NO.	REV.
9909232.01	4412-070-PDWG-101	0

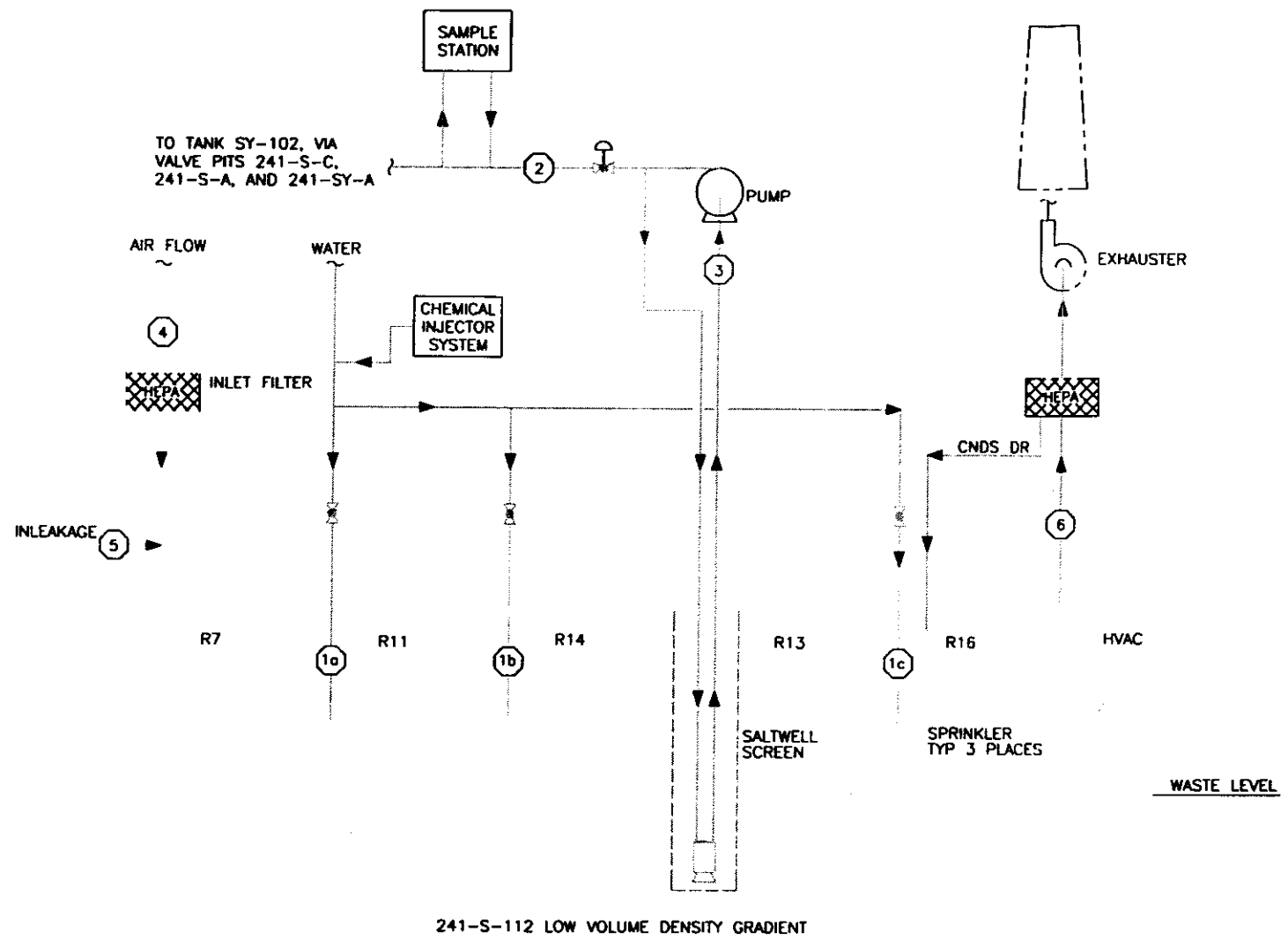

NOTE:

1. THIS DRAWING IS A SIMPLIFIED DIAGRAM IDENTIFYING MAJOR COMPONENTS AND NORMAL PROCESS FLOW. SOME COMPONENTS HAVE BEEN OMITTED FOR CLARITY
2. FOR SYMBOL LEGEND SEE DRAWING 4412-070-PDWG-101.

DESIGN MASS FLOWS: TANK S-112 DISSOLUTION								
STREAM NO.	1a	1b	1c	2	3	4	5	6
STREAM NAME	WATER	WATER	WATER	DISSOLVED SALT SOLUTION	DISSOLVED SALT SOLUTION	INLET AIR	INLEAKAGE	EXHAUST AIR
OPERATING PRESSURE (GAUGE)	80 PSI	80 PSI	80 PSI	70 PSI	20 PSI	~0 in H20	~0 in H20	~-1 in H20
FLOW RATE	3-4 GPM	3-4 GPM	3-4 GPM	4-6 GPM	25-30 GPM	325 CFM	125 CFM	500 CFM
SPECIFIC GRAVITY (H20 = 1.0)	1.0	1.0	1.0	1.21-1.46	1.21-1.46	N/A	N/A	N/A

PRECONCEPTUAL

NOT APPROVED FOR CONSTRUCTION

NO.	DATE	CLASS REV.	REVISIONS	DWN	DES	CHKD	REL	SUB	REC	APP

HND Holmes & Narver/DMJM TEAM

241-S-112 SALTCAKE DISSOLUTION DEMONSTRATION PROJECT

PROCESS FLOW DIAGRAM

AREA 241-S-112, 241-SY-102

FOR CH2M HILL HANFORD GROUP, INC.

DRAWN	ARES CORP
DESIGN	
CHECKED	
RELEASED	
DATE	
SHEET	1 OF 1

ARES PROJECT ID	DRAWING NO.	REV.
9909232.01	4412-070-PDWG-102	0

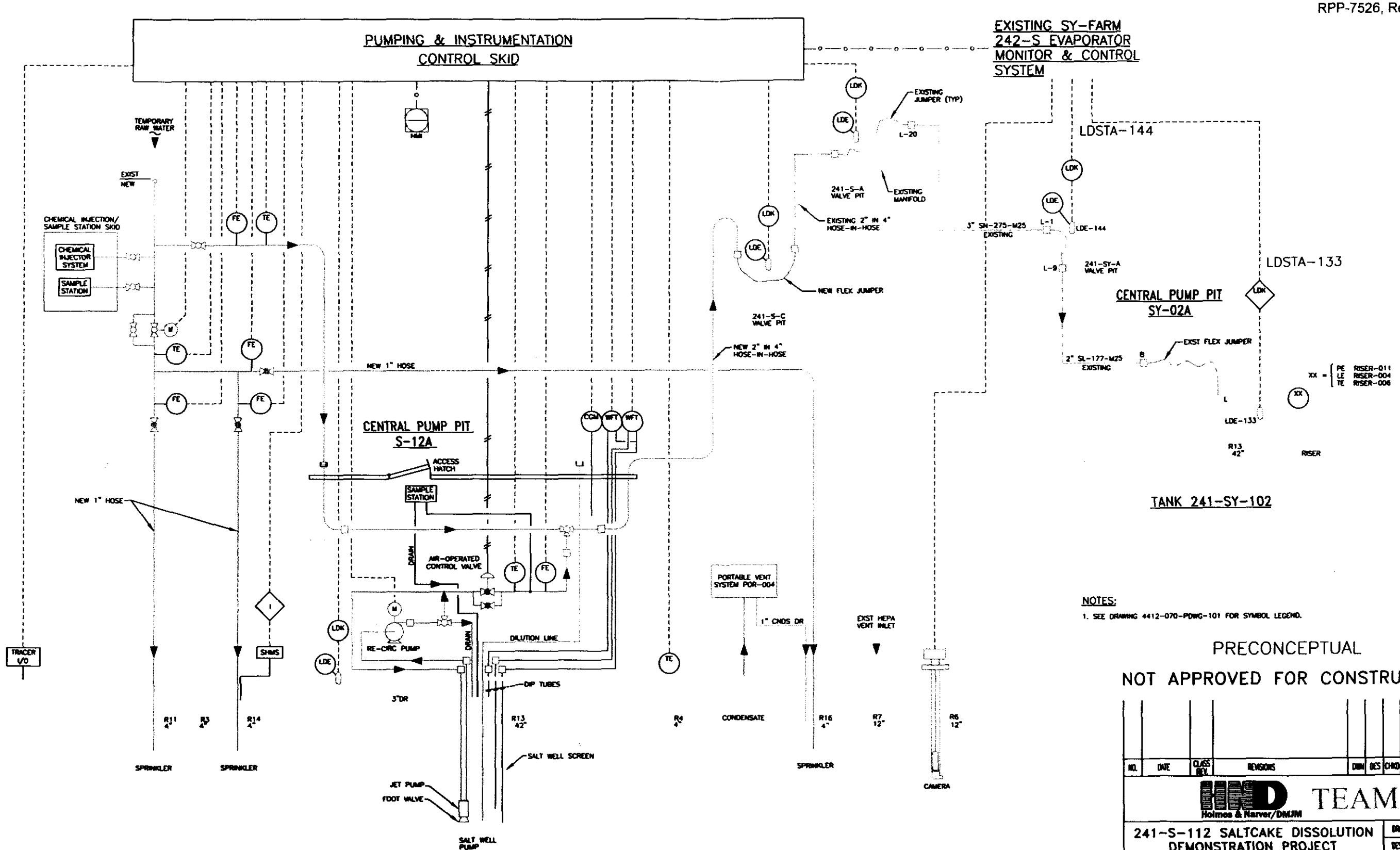

NOTES:

1. SEE DRAWING 4412-070-PDWG-101 FOR SYMBOL LEGEND.

PRECONCEPTUAL

NOT APPROVED FOR CONSTRUCTION

NO.	DATE	CLASS REV.	REVISIONS	DRWN	DES	CHKD	REL	SUB	REC	APP

HND TEAM
Holmes & Narver/DMJM

241-S-112 SALTCAKE DISSOLUTION DEMONSTRATION PROJECT

PROCESS & INSTUMENTATION DIAGRAM

AREA 241-S-112, 241-SY-102

FOR CH2M HILL HANFORD GROUP, INC.

DRAWN	ARES CORP
DESIGN	
CHECKED	
RELEASED	
DATE	
SHEET	1 OF 1

ARES PROJECT ID	DRAWING NO.	REV.
9909232.01	4412-070-PDWG-103	0

Appendix I
Ecology Interpretation of M-43 TPA Milestone

This page intentionally left blank.

STATE OF WASHINGTON
DEPARTMENT OF ECOLOGY
1315 W. 4th Avenue • Kennewick, Washington 99336-6018 • (509) 735-7581

October 16, 1996

Post-it® Fax Note 7671	Date 10/17	# of pages ▶ 2
To BRAD ERLANDSON	From M. A. McLAUGHLIN	
Co./Dept. LMHC	Co. FDH	
Phone #	Phone # 376-4084.	
Fax # 373-6120	Fax #	

Mr. James K. McClusky
U.S. Department of Energy
P.O. Box 550
Richland, WA 99352

Dear Mr. James K. McClusky:

Re: Upgrade Milestone Requirements

The Washington State Department of Ecology (Ecology) has been in recent discussions with the U.S. Department of Energy (USDOE) to clarify the requirement for Tri-Party Agreement (TPA) Milestone 43 series completion. This letter reflects Ecology's interpretation of the milestone requirements. Ecology believes its interpretation is consistent with the rationale that supported development of these milestones during 1995 and is supportive of USDOE's path to priortize tank farm upgrades work.

It is Ecology's understanding, the W-314 project is being modified to prioritize the upgrade scope necessary to, (1) support privatization, and (2) to complete additional upgrades to bring the Double-Shell Tank system into compliance with the Dangerous Waste Regulations by 2005. USDOE intends to start construction in several tank farms, initially with work proceeding simultaneously. However, all necessary W-314 upgrades compliance work in each tank farm may not necessarily be complete until the year 2005. Ecology concurs these actions are consistent with completion of the M-43 series, listed below, provided "start construction" occurs on, or before, the date listed for each tank farm.

M-43-10	Start Definitive Design for Project W-314	1/31/97
M-43-11	Provide the W-314 Project Construction Schedule to Ecology	9/30/98
M-43-12	Start Construction for Upgrades in the First Tank Farm	6/30/99
M-43-13	Start Construction for Upgrades in the Second Tank Farm	6/30/00
M-43-14	Start Construction for Upgrades in the Third Tank Farm	6/30/01
M-43-15	Start Construction for Upgrades in the Fourth Tank Farm	6/30/02
M-43-16	Start Construction for Upgrades in the Fifth Tank Farm	6/30/03

It is important for USDOE to develop a construction schedule by September 30, 1998, showing completion of all W-314 compliance upgrades scope by 2005. This construction schedule will be used by Ecology to determine if USDOE is progressing towards successfully completing its milestone commitments. It should be clearly understood that upgrades (ventilation, instrumentation, transfer, and electrical systems) required for compliance which are not part of W-314 project scope, and not otherwise specifically named in the TPA for

completion, are also required to be complete by the major M-43 date (M-43-00, Complete Tank Farm Upgrades, 6/30/05.)

If USDOE disagrees with Ecology's interpretation, please notify us in writing of your objections within seven days of receipt of this letter, as provided in Article VIII of the TPA.

If you have any questions or require additional information, please contact me at (509) 736-3048.

Sincerely,

Norman T. Hepper, PE
Nuclear Waste Program

NTH:sdb

cc: Jaime E. Navarro, USDOE
Mary Lou Blazek, ODOE