S

APR 11 2000
Sta 4 (S)

ENGINEERING DATA TRANSMITTAL

1. EDT 627890

2. To: (Receiving Organization) LMHC Characterization Engineering	3. From: (Originating Organization) Characterization Engineering	4. Related EDT No.: N/A
5. Proj./Prog./Dept./Div.: Characterization Project	6. Design Authority/Design Agent/Cog. Engr.: GP Janicek/BL Coverdell / RN Dale	7. Purchase Order No.: N/A
8. Originator Remarks: Justification for addition of lead shielding to shielded receiver tube submitted for review and approval prior to release.		9. Equip./Component No.: N/A
		10. System/Bldg./Facility: 200G
11. Receiver Remarks: 11A. Design Baseline Document? [] Yes [X] No		12. Major Assm. Dwg. No.: N/A
		13. Permit/Permit Application No.: N/A
		14. Required Response Date: ASAP

15. DATA TRANSMITTED

(A) Item No.	(B) Document/Drawing No.	(C) Sheet No.	(D) Rev. No.	(E) Title or Description of Data Transmitted	(F) Approval Designator	(G) Reason for Transmittal	(H) Originator Disposition	(I) Receiver Disposition
1	RPP-6018	N/A	0	JUSTIFICATION FOR SHIELDED RECEIVER TUBE ADDITIONAL LEAD SHIELDING	N/A	1	1	

16. KEY

Approval Designator (F)	Reason for Transmittal (G)		Disposition (H) & (I)	
E, S, Q, D or N/A (see WHC-CM-3-5, Sec. 12.7)	1. Approval 2. Release 3. Information	4. Review 5. Post-Review 6. Dist. (Receipt Acknow. Required)	1. Approved 2. Approved w/comment 3. Disapproved w/comment	4. Reviewed no/comment 5. Reviewed w/comment 6. Receipt acknowledged

17. SIGNATURE/DISTRIBUTION
(See Approval Designator for required signatures)

(G) Reason	(H) Disp.	(J) Name (K) Signature (L) Date (M) MSIN	(G) Reason	(H) Disp.	(J) Name (K) Signature (L) Date (M) MSIN
1	1	Design Authority GP Janicek 3/28/00 S7-12	1	1	Proj. Mgr. JD Criddle 3/28/00 S7-12
1	1	Design Agent BL Coverdell BL Coverdell 3/27/00 S7-12	1	1	GW Wilson 3/27/00 S7-12
1	1	Cog. Eng. RN Dale 3/28/00 S7-12	1	1	MR Kembel 4/6/00
1	1	Cog. Mgr. JS Schofield John Schofield 3/28/00 S7-12			
		QA N/A			
1	1	Safety CD Jackson C. D. Jackson 3/28/00 S7-34			
		Env. N/A			

18.	19.	20.	21. DOE APPROVAL (if required)
BL Coverdell 3/27/00 BL Coverdell Signature of EDT Originator — Date	RM Boger 4/6/00 RM Boger Authorized Representative For Receiving Organization — Date	John Schofield 3/28/00 JS Schofield Design Authority/ Cognizant Manager — Date	Ctrl No. [] Approved [] Approved w/comments [] Disapproved w/comments

BD-7400-172-2 (05/96) GEF097

JUSTIFICATION FOR SHIELDED RECEIVER TUBE ADDITIONAL LEAD SHIELDING

R. M. Boger
Prepared by CH2M Hill Hanford Group, Inc.
2400 Stevens
Richland, WA 99352
U.S. Department of Energy Contract DE-AC06-96RL13200

EDT/ECN: 627890
Org Code: 74900
B&R Code: EW3130000

UC: 2000
Charge Code: CACN: 102250 COA: EI00
Total Pages: 13~~8~~ 4/11/00

Key Words: Core Sampling, Shielded Receiver, Shielded Receiver Tube, Lead, Shielding

Abstract: In order to reduce high radiation dose rates encountered when core sampling some radioactive waste tanks the addition of 240 lbs. of lead shielding is being considered to the shielded receiver tube on core sample trucks #1, #3 and #4. The lead shielding is 4" diameter x ½" thick half rounds that have been installed around the SR tube over its' full length. Using three unreleased but independently reviewed structural analyses HNF-6018 justifies the addition of the lead shielding.

TRADEMARK DISCLAIMER. Reference herein to any specific commercial product, process, or service by trade name, trademark, manufacturer, or otherwise, does not necessarily constitute or imply its endorsement, recommendation, or favoring by the United States Government or any agency thereof or its contractors or subcontractors.

Printed in the United States of America. To obtain copies of this document, contact: Document Control Services, P.O. Box 950, Mailstop H6-08, Richland WA 99352, Phone (509) 372-2420; Fax (509) 376-4989.

APR 1 1 2000
DATE:
STA: 4
HANFORD RELEASE
ID: (S)
Release Stamp

4/7/00
Release Approval

Approved for Public Release

JUSTIFICATION FOR SHIELDED RECEIVER TUBE ADDITIONAL LEAD SHIELDING

Prepared for CH2M Hill Hanford Group, Inc.
Characterization Engineering Group
By
B. L. Coverdell
COGEMA Engineering Corporation

March, 2000

JUSTIFICATION FOR SHIELDED RECEIVER TUBE ADDITIONAL LEAD SHIELDING

TABLE OF CONTENTS

1.0 INTRODUCTION 1
2.0 IDENTIFICATION OF APPLICABLE ANALYSES 1
3.0 DISCUSSION OF ANALYSES 1
3.1 SHIELDED RECEIVER TUBE 1
3.2 CORE SAMPLE TRUCK #1 1
3.3 CORE SAMPLE TRUCK #3 AND #4 2
4.0 CONCLUSION 2
5.0 REFERENCES 3

APPENDICES

Appendix A: Stress Analysis of Shielded Receiver Tube to Support An Additional 250 lbs A-1
Appendix B: Structural and Stress Analysis, Shielded Receiver Lifting Frame, Core Sample Truck #1 ..... B-1
Appendix C: Structural and Stress Analysis, Shielded Receiver Lifting Frame and Jack Assemblies, Core Sample Truck #3 and #4 ..... C-1

JUSTIFICATION FOR SHIELDED RECEIVER TUBE ADDITIONAL LEAD SHIELDING

1.0 INTRODUCTION

High radiation doses have been encountered during recent core sampling of Hanford radioactive waste tanks. Temporary lead shielding has been identified for installation on the Shielded Receiver (SR) tube for Core Sample Trucks (CST) #1, #3 and #4. The half round lead shielding installed around the SR tube have a 4 ½" inside diameter and ½" thick wall. The total weight of the lead shielding added is 240 lb. The purpose of this document is to verify that the Shielded Receiver Lifting Frames (SRLF) on CSTs #1, #3 and #4 are adequate to support the addition of 240 lbs of lead shielding.

2.0 IDENTIFICATION OF APPLICABLE ANALYSES

An engineering calculation was prepared that structurally analyzes the effect of adding 240 lb. of lead shielding to the identical SR tubes on CSTs #1, #3 and #4. The engineering calculation in Appendix A, *Stress Analysis of Shielded Receiver Tube*, is not released into the Hanford Document Control System but has been independently reviewed.

Two structural analyses have been completed analyzing the structural components that make up SRLF (Appendix B). The first analysis is *Structural and Stress Analysis, Shielded Receiver Lifting Frame, Core Sample Truck #1*. The second is *Structural and Stress Analysis, Shielded Receiver Lifting Frame and Jack Assemblies, Core Sample Truck #3 and #4* (Appendix C). Neither of these documents are released into the Hanford Document Control System, however, both documents have been independently Reviewed.

3.0 DISCUSSION OF ANALYSES

3.1 SHIELDED RECEIVER TUBE

Appendix A contains a short analysis used to determine if the SR tube, the SR tube welds and SR tube to SR Hoist base plate bolted connection on CST #1, #3 and #4 are adequate. The analysis determined that the SR tube and its' structural connections are more than adequate to support an additional 240 lbs of temporary lead shielding.

3.2 CORE SAMPLE TRUCK #1

The text excerpt from the SRLF structural analysis in Appendix B evaluates the structural adequacy of CST #1 SRLF to support the dead weight of the SR Hoist, SR tube, SRLF structure and associated transportation loads. Page B-11 identifies the maximum SRLF member stresses as being 21,300 psi. This stress occurs in the Tube Steel (TS) 2x2x¼ structural tube members connecting the SR fixed frame to the truck frame.

The analysis conservatively assumes the allowable stress for this member to be based on that for ASTM A36 carbon steel. According to the American Institute of Steel Construction (AISC 1989) for the given section size and yield stress, the allowable stress was determined to be 23,760 psi. However, the SRLF 2x2x¼ structural tube members are actually fabricated using ASTM A500 Grade B material. This material has yield stress of 46,000 psi as opposed to 36,000 psi for ASTM A36 material. Therefore, the allowable stress for the ASTM A500 Grade B material should actually be 30,360 psi. This is a 27.8% increase in the allowable stress for the TS 2x2x¼.

The high stress members on CST #1, the TS 2x2x¼ structural tube members, are actually TS 3x2x5/16 and TS 3x3x5/16 (see drawings H-2-91715, Sht. 1, Rev. 9, H-2-91716, Sht. 3, Rev. 0, Sht. 4, Rev. 0). Using the smaller sized structural tubing as a reference, the increased size in structural tubing provides a 287% increase in structural rigidity about the X-X axis, 94% about the Y-Y axis and 72% increase in cross-sectional area. In addition to using larger structural tube members, the SRLF has been significantly strengthened to accommodate the addition of hydraulic cylinders with a 1 ¾" diameter rod in lieu of cylinders with 1" diameter rods (see ECN 626650).

3.3 CORE SAMPLE TRUCK #3 AND #4

The text excerpt of the CST #3 and #4 SRLF structural analysis in Appendix C evaluates the structural adequacy of the SRLF to support the dead weight of the SR Hoist, SR tube, SRLF structure and associated transportation loads. Page C-14 identifies the maximum SRLF member stresses as being 23,740 psi. This stress occurs in the TS 2x2x¼ structural tube members connecting the SR fixed frame to the truck frame.

The analysis conservatively assumes the allowable stress for this member to be based on that for ASTM A36 carbon steel. According to AISC 1989 given the section size and yield stress, the allowable stress was determined to be 23,760 psi. However, the SRLF 2x2x¼ structural tube members are actually fabricated using ASTM A500 Grade B material. This material has yield stress of 46,000 psi as opposed to 36,000 psi for ASTM A 36 material. Therefore, from AISC 1989 the allowable stress for the ASTM A500 Grade B material should actually be 30,360 psi. This is a 27.8% increase in the allowable stress for the TS 2x2x¼.

On CSTs #3 and #4, the members determined to have the highest stresses (TS 2x2x¼ connecting the SR fixed frame to the CST frame) were analyzed as simple shapes when, in fact, they are composite shapes. The TS 2x2x¼ have ¼" gusset plates welded between them and the CST frame (see H-2-690043, Rev. 2, zone F-4). The addition of the gusset plates significantly increases the structural capacity of the TS 2x2x¼ connecting members. In addition, the SRLF has been significantly strengthened to accommodate the addition of hydraulic cylinders with a 1 ¾" diameter rod in lieu of cylinders with 1" diameter rods (see drawings H-2-690043, Rev. 2 and H-2-690044, Sht. 1, Rev. 3 and Sht 2, Rev. 2).

4.0 CONCLUSION

Half round lead shielding weighing equal to or less than 240 lb may be added to the SR tube on CST #1, #3 and #4 based on the following facts:

- The structural analysis of the SR tube, the SR tube welds and SR tube to SR hoist base plate bolted connections determined that the structural integrity was more than adequate to support the additional load.
- Both analyses of the SRLFs (Appendices B & C) use a very conservative allowable stress for the evaluation of the SRLFs structural tubing.
- Structural modifications increasing the strength of the SRLFs were made subsequent to the performance of the analyses in appendices B and C. The modifications increased the strength of the high stress members of the SRLFs for all three CSTs.

Operational loading of SRLF was not considered by either of the structural analyses in the appendices B or C, however, after review of the analyses it was determined that transportation loads (longitudinal = -.43g, lateral = .37g and vertical = -.18g) bound all operational loads. Review of the structural analysis of the SR tube and SR tube connections in Appendix A determined that it is adequate to support operational loading.

5.0 REFERENCES

AISC, 1989, *Manual of Steel Construction - Allowable Stress Design,* American Institute of Steel Construction, Ninth Edition, Chicago, Illinois.

Appendix A: Stress Analysis of Shielded Receiver Tube.

TWRS ADMINISTRATION	Manual	HNF-IP-0842
	Volume	VII, Radiological Control
TEMPORARY SHIELDING	Section	3.2, REV 2
	Page	8 of 10
	Effective Date	July 31, 1998

Figure 1. Temporary Shielding Authorization Form.

TEMPORARY SHIELDING AUTHORIZATION

TEMPORARY SHIELDING AUTHORIZATION

ID Number: _____ Shielding Location: RMCST SHIELDED RECEIVER

A. RWP # _____ Pre-Job Survey Data: 30cm OW _____ CW _____
Work Package # _____ Contact OW _____ CW _____

B. Shielding (Installation) Alteration or Removal: (Circle one)
Instructions: (attach drawings if necessary) INSTALL ½" THK 4"Φ LEAD PIPE SHIELDING OVER LENGTH OF RMCST SHIELDED RECEIVER, AS REQ'D.

C. Approvals

Facility Engineering [signature] Date 8/4/99 Weight Limitations 250lb
(For Installation or Modification Only)

Radiological Control _____ Date _____

D. Comments:
½" THK x 4"Φ PIPE SHIELDING MAY BE INSTALLED OVER LENGTH OF RMCST SHIELDED RECEIVER, AS REQ'D. SEE ATTACHED ANALYSIS.

E. Installation, Alteration, and Removal

Final Configuration: ___ Shielding Removed
___ Shielding Modified/Installed (Attach drawings or photographs)

Shielding In Place	Amount

Final estimated weight of Shielding:

Radiation Dose Rates:	Distance	Shielded		UnShielded	
	30 cm	OW _____	CW _____	OW _____	CW _____
	Contact	OW _____	CW _____	OW _____	CW _____

Completed By: (HPT) _____ Date _____

Calc. No. _____
Revision 0
Page No. _____

DESIGN ANALYSIS

Client: Characterization Equipment
Subject: Shielded Receiver Tube Analysis

WO/Job No. _____
Date: 8/04/99 By: B. L. Coverdell
Checked: 8/4/99 By: [signature]
Revised: _____ By: _____

1.0 OBJECTIVE This set of calculations determines the adequacy the shielded receiver tube to carry an additional loading of 250 lb due to lead shielding.

2.0 DESIGN INPUTS
2.1 Drawing: H-2-690020 Rev. 3

3.0 ASSUMPTIONS
3.1 None

4.0 METHODS OF ANALYSIS (Hand calculations completed in Mathcad ver. 8.0)

5.0 REFERENCES
5.1 AISC, 1989, Manual of Steel Construction, 9th Edition, American Institute of Steel Construction, Chicago, Illinois.

5.2 Blodgett, O W, 1991, *Design of Welded Structures*, Fourteenth Printing, The James F. Lincoln Arc Welding Foundation, Cleveland, Ohio.

6.0 FINDINGS AND CONCLUSIONS The calculations below determine the shielded receiver tube is adequate to carry the exected 250 lbf additional loading with a large factor-of-safety.

7.0 CALCULATIONS

7.1 Determine the loads on the shielded receiver tube and include the addition of lead shield.

$Tube := 250 \cdot lbf$ — Weight of added lead shield.

$L := 77 \cdot in - 1.12 \cdot in - .75 \cdot in$ — $L = 6.261\ ft$ — Length of shielded receiver tube.

$Tube_4 := L \cdot 10.79 \frac{lbf}{ft}$ — $Tube_4 = 67.554 \cdot lbf$ — Weight of 4" schedule 40 pipe.

$Tube_2 := L \cdot 3.65 \cdot \frac{lbf}{ft}$ — $Tube_2 = 22.852 \cdot lbf$ — Weight of 2" sch 40 pipe.

$Lead := L \cdot \left[\frac{\pi}{4} \cdot \left[(10.02 \cdot in)^2 - (2.375 \cdot in)^2\right]\right] \cdot 710 \cdot \frac{lbf}{ft^3}$ — $Lead = 2297 \cdot lbf$ — Weight of lead.

$Flange := \frac{\pi}{4} \cdot \left[(8.5 \cdot in)^2 - (2.39 \cdot in)^2\right] \cdot .75 \cdot in \cdot 490 \cdot \frac{lbf}{ft^3}$ — $Flange = 11.114 \cdot lbf$ — Weight of lower flange.

Weight of ball valve, view port and dust cap is estimated at 100 lb.

$W_{total} := Tube + Tube_2 + Tube_4 + Lead + Flange$ — $W_{total} = 2649 \cdot lbf$ — Misc weight.

7.2 Assuming the 4" sch 40 pipe carries the entire load, determine the maximum stress in pipe.

Completed By:
Checked By:

$A_4 := 3.17 \cdot in^2$ Cross sectional area of 4" sch 40 pipe.

$\sigma_t := \frac{W_{total}}{A_4}$ $\sigma_t = 835.629 \cdot psi$ OK

7.3 Determine the adequacy of the 1/4" weld attaching the 4" sch 40 pipe to the upper flange.

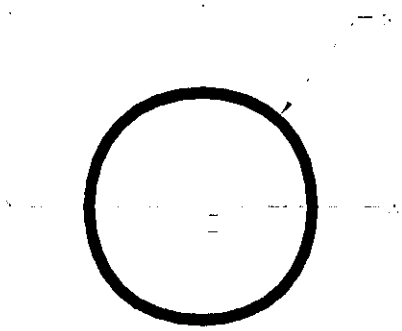

$d := 4.5 \cdot in$ Diameter of weld.

$w_a := \frac{1}{4} \cdot in$ Weld size.

$\sigma_{base} := 36000 \cdot psi$ Yield stress of the base metal.

$\sigma_{weld} := 60000 \cdot psi$ Yield stress of the weld matal.

Connection Loads:

$F_x := 0 \cdot lbf$ $F_y := 0 \cdot lbf$ $F_z := W_{total}$

$M_x := 0 \cdot in \cdot lbf$ $M_y := 0 \cdot in \cdot lbf$ $M_z := 0 \cdot in \cdot lbf$

Weld Properties per Blodgett 1991

$C_x := \frac{d}{2}$ $C_x = 2.25 \cdot in$ The distance to the outer fiber in the x-direction.

$C_y := \frac{d}{2}$ $C_y = 2.25 \cdot in$ The distance to the outer fiber in the y-direction.

$A_w := \pi \cdot d$ $A_w = 14.137 \cdot in$ The linear area of the weld.

$S_{wx} := \frac{\pi \cdot d^2}{4}$ $S_{wx} = 15.904 \cdot in^2$ The linear section modulus about the x-axis.

$S_{wy} := \frac{\pi \cdot d^2}{4}$ $S_{wy} = 15.904 \cdot in^2$ The linear section modulus about the y-axis.

$J_w := \frac{\pi \cdot d^3}{4}$ $J_w = 71.569 \cdot in^3$ The linear polar moment of inertia.

Linear Weld Stress:

$$f_w := \sqrt{\left(\frac{F_z}{A_w} + \frac{M_x}{S_{wx}} + \frac{M_y}{S_{wy}}\right)^2 + \left(\frac{F_x}{A_w} + \frac{M_z \cdot C_y}{J_w}\right)^2 + \left(\frac{F_y}{A_w} + \frac{M_z \cdot C_x}{J_w}\right)^2} \qquad f_w = 187.375 \cdot \frac{lbf}{in}$$

Required Fillet Weld Size:

$$w_r := if\left[\frac{f_w}{0.707 \cdot (0.3) \cdot \sigma_{weld}} \le \frac{f_w}{0.4 \cdot \sigma_{base}}, \frac{f_w}{0.4 \cdot \sigma_{base}}, \frac{f_w}{0.707 \cdot (0.3) \cdot \sigma_{weld}}\right] \qquad w_r = 0.015 \cdot in$$

0.707 is for shear through throat of fillet weld, 0.3 is allowable stress reduction factor for shear through throat of fillet weld and 0.4 is for shear on base metal. See AISC 1989, Table J2.5, Page5-70.

The Margin of Safety:

$FS := \frac{w_a}{w_r}$ $FS = 16.979$ OK

Completed By:
Checked By:

7.4 Check bolts attaching upper flange and shielded receiver tube to the hoist box.

$n := 8$ Number of 5/8" A193 bolts.

$\sigma_{t_allow} := 90000 \cdot psi$ Minimum yield stress for an A193 bolt (no class specified).

$W_{flange} := \frac{\pi}{4} \cdot \left[(13.5 \cdot in)^2 - (2.39 \cdot in)^2 \right] \cdot 1.12 \cdot in \cdot 490 \cdot \frac{lbf}{ft^3}$ $W_{flange} = 44.035 \cdot lbf$ Weight of upper flange.

$W_{total} := W_{total} + W_{flange}$ Total weight of shielded receiver tube assembly.

$A_c := .202 \cdot in^2$ Cross sectional area of a 5/8" bolt.

$\sigma_t := \frac{W_{total}}{n \cdot A_c}$ $\sigma_t = 1666 \cdot psi$ Maximum stress in a 5/8" bolt.

$FS := \frac{\sigma_{t_allow}}{\sigma_t}$ $FS = 54.007$ OK

ADVANCED SHIELDING TECHNOLOGY, LLC
PRICING STRUCTURE
EFFECTIVE DATE: May 1, 1999 (rev.1)

I. Coated Pipe Shields, 0.50" thick lead, price per liner foot

PIPE DIAMETER	RadKlad 140		Metalized	
	Half Round	Full Round	Half Round	Full Round
4" or less	$80	$160	$94	$238
6"	$105	$210	$119	$300
8"	$124	$248	$147	$372
10" & 12"	$140	$280	$166	$420
14" & 16""	$140	$280	$166	$420
18" & 20"	$150	$300		

II. Coated Pipe Elbow Shields, 0.50" thick lead, price per elbow

PIPE DIAMETER	RadKlad 140		Metalized	
	Half Round	Full Round	Half Round	Full Round
4" or less	$168	$336	$199	$505
6"	$248	$496	$294	$742
8"	$360	$720	$427	$1,078
10"	$518	$1036	$615	$1,554
12"	$835	$1,670	$993	$2,505
14" - 20"	$900	$1800		

ADVANCED SHIELDING TECHNOLOGY, LLC

III. Coated Shield Panels, 0.25" thick lead

SIZE	RadKlad 140		Metalized
1' x 3'	$130		$210
1' x 4'	$160		$245
2' x 4'	$225		$295

* includes 4 grommetted holes

IV. Coated Valve Shields, 0.75" thick lead

VALVE SIZE	RadKlad 140	RadKlad 340	Metalized
3/4" to 1"	$470		$705
2"	$575		$860
3/4" to 1" Karotest	$575		$860

V. Whole Body Monitor Shield Enclosure

Specifications (standard model):

- will accommodate most whole body monitors is use (IPM, PCM, etc.)
- *modular dimensions*
- single entry/exit
- seismic qualification available
- modular design allows for easy installation and removal of individual shield panels
- modular design allows for easy access to whole body monitor for maintenance
- safe and easy assembly/disassembly
- side shielding available up to 1.0" lead thickness in 1/4" increments
- roof shielding available up to 1/2" lead thickness in 1/4" increments
- stainless steel panel finish
- options available at Customer request
- Special Design Whole Body Monitor Shield Enclosures available

Prices (standard model):

- 1/4" thick lead shielding on sides and roof — *{call for estimate}*
- 1/2" thick lead shielding on sides and roof — "
- 3/4" thick lead shielding on sides, 1/2" thick on roof — "
- 1.0" thick lead shielding on sides, 1/2" thick on roof — "

ADVANCED SHIELDING TECHNOLOGY, LLC

Notes:

1. All prices are subject to change without notification.
2. Prices are non-inclusive of handling and freight charges, installation materials (fasteners), or installation support services, if applicable.
3. Products shown here are indicative of most commonly fabricated shield products. Please contact us for pricing on other shielding products.
4. 10 working days are required to process requests for all special shield designs.
5. Fabrication of special size valve shields requires a 4 to 6 week lead time.

WEIGHT INFORMATION

I. Pipe Shields (0.5" thick lead)

Diameter	Weight per liner foot (half-round shield coverage)
1"	6.75 lbs
2"	11.5
3"	15.5
4"	19.75
5"	23.75
6"	28
8"	35.5
10"	45
12"	53.25

II. Valve Shields (0.75" thick lead)

Valve size	Weight
3/4"	15 lbs
1"	15
2"	80

III. Shield Panels (1/4" thick)

15 lbs per square foot

Appendix B: Structural and Stress Analysis, Shielded Receiver Lifting Frame, Core Sample Truck #1

ENGINEERING DATA TRANSMITTAL

Page 1 of 1

1. EDT 608360

2. To: (Receiving Organization) Characterization Equipment	3. From: (Originating Organization) Structural Integrity Assessment	4. Related EDT No.: N/A
5. Proj./Prog./Dept./Div.: Tank Farms	6. Cog. Engr.: F. R. Vollert	7. Purchase Order No.: N/A
8. Originator Remarks: For review and approval. Appendices are not attached.		9. Equip./Component No.: N/A
		10. System/Bldg./Facility: 200 Area Tank Farms
11. Receiver Remarks:		12. Major Assm. Dwg. No.: H-2-140300
		13. Permit/Permit Application No.: N/A
		14. Required Response Date: 03/03/95

15. DATA TRANSMITTED

(A) Item No.	(B) Document/Drawing No.	(C) Sheet No.	(D) Rev. No.	(E) Title or Description of Data Transmitted	(F) Impact Level	(G) Reason for Transmittal	(H) Originator Disposition	(I) Receiver Disposition
1	WHC-SD-WM-ER-412		0	STRUCTURAL AND STRESS ANALYSES, SHIELDED RECEIVER LIFTING FRAME, CORE SAMPLER TRUCK #1	Q	1	1	

16. KEY

Impact Level (F)	Reason for Transmittal (G)	Disposition (H) & (I)
1, 2, 3, or 4 (see MRP 5.43)	1. Approval 2. Release 3. Information 4. Review 5. Post-Review 6. Dist. (Receipt Acknow. Required)	1. Approved 2. Approved w/comment 3. Disapproved w/comment 4. Reviewed no/comment 5. Reviewed w/comment 6. Receipt acknowledged

17. SIGNATURE/DISTRIBUTION (See Impact Level for required signatures)

(G) Reason	(H) Disp.	(J) Name	(K) Signature	(L) Date	(M) MSIN	(J) Name	(K) Signature	(L) Date	(M) MSIN	(G) Reason	(H) Disp.
1		Cog.Eng. F. R. Vollert	F.R. Vollert	2/21/95	H5-52						
1		Cog. Mgr. K. V. Scott			H5-52						
1		QA J. J. Verderber			S1-57						
1		J. L. Smalley			R1-17						
1		R. J. Blanchard			R1-17						
1		T. S. Hundal			H5-52						
1		H. H. Ziada	H. H. Ziada	2-21-95	H5-52						

18.	19.	20.	21. DOE APPROVAL (if required) Ltr. No. N/A
F. R. Vollert	R. J. Blanchard	K. V. Scott	[] Approved [] Approved w/comments [] Disapproved w/comments
Signature of EDT Originator / Date	Authorized Representative for Receiving Organization / Date	Cognizant/Project Engineer's Manager / Date	

BD-7400-172-2 (07/91) GEF097

BD-7400-172-1 (07/91)

STRUCTURAL AND STRESS ANALYSES, SHIELDED RECEIVER LIFTING FRAME, CORE SAMPLER TRUCK #1

1.0 INTRODUCTION

Structural and stress analyses have been conducted for the shielded receiver lift frame (SRLF) mounted on core sampler truck number 1. Analyses cases were: the normal operational static vertical (deadweight) loads and the deadweight combined with additional static vertical and horizontal loads intended to account for the potential demands of transporting the SRLF on the truck.

The SRLF is a space frame structure with welded joints. It is fabricated from various size structural steel tubes, except the two main members for the fixed frame portion are 6 inch deep channels. The objectives of the structural analyses include determining and evaluating the stresses in the frame members and the weld joints. Three dimension static finite (beam) element analyses of the SRLF were conducted (Images 1993) with models to represent the SRLF in the raised and lowered position, and to envelope the restraint provided by the welded attachments to the truck. Fully fixed joints were used in the finite element models. The results were member (beam) stresses and joint forces. The joint forces were used to calculate the weld stresses for the joints with methods from Blodgett 1982. The member and weld stresses were evaluated and determined to be in conformance with AISC 1989 and AWS 1992. The analyses results do <u>not</u> predict the potential affects of residual stresses, cyclic stresses, stress concentrations, and potential defects. The welds, including the attachments to the truck, should frequently be thoroughly cleaned and visually inspected.

2.0 CONCLUSIONS AND RECOMMENDATIONS

The SRLF structural analyses results are the stresses and joint forces for the structural members. The joint forces were then used to calculate the welded joint stresses, including the stresses in the gusset plates that stiffen 4 joints. These calculated member and weld stresses all are within the allowable values. However, the SRLF structural member ends are simply and directly welded together at the joints or connections. Therefore, the analyses and the results do <u>not</u> predict or incorporate the potential affects of:

- residual stresses due to fabrication
- cyclic stress changes during operation and transportation (fatigue)
- stress concentrations, sharp corners, and potential defects in the welded joints.

The computed stresses in the members and welds would directly superimpose with residual stresses. This increases the potential for overstress under all load conditions, particularly for the welds. Cyclic stresses have the

potential to initiate and propagate fatigue cracks. Again the welds with the higher likelihood for stress concentrations and defects are the most vulnerable. Further more comprehensive analyses to account for these potential effects could be conducted. A number of enveloping assumptions would be necessary. It is believed that, after further analyses, too many uncertainties would remain to eliminate this concern.

It is recommended that the weld joints in the SRLF and the attachments to the truck be thoroughly cleaned and visually inspected frequently. For example, after each 30 days of operation, and after each relocation to another tank farm. The inspections would be for evidence of structural and joint distress including cracks. They should be frequent, because visual inspection may not be able to find cracks before they have advanced considerably.

In the event structural distress occurs where joint repair is necessary, evaluation should be made to determine if the design details can be readily improved.

3.0 MATERIALS AND ALLOWABLE STRESSES

Design drawing H-2-91716 (WHC 1994b) for the SRLF specifies either ASTM A36 or ASTM A500, Grade B steel for the structural tubes and channels. The steel plates and other components used are ASTM A36. The weld metal used has a specified minimum ultimate strength of 70,000 lbf/in^2.

3.1 STRUCTURAL STEEL STRENGTH AND ALLOWABLE STRESSES

The strength, allowable stresses, and other material properties used for all the structural steel members and components in the SRLF were established conservatively from ASTM A36 steel minimum specifications as follows:

Modulus of Elasticity, E	= 29,000,000 lbf/in^2
Shear Modulus, G	= 11,200,000 lbf/in^2
Poisons Ratio, μ	= 0.300
Ultimate Tensile Strength, F_u	= 58,000 lbf/in^2
Yield Strength, F_y	= 36,000 lbf/in^2
Allowable Axial Stress, F_t	= 0.60 x F_y = 21,600 lbf/in^2
Allowable Bending Stress, F_b	= 0.66 x F_y = 23,760 lbf/in^2
Allowable Shear Stress, F_v	= 0.40 x F_y = 14,400 lbf/in^2

3.2 WELD ALLOWABLE STRENGTH

The ultimate and allowable strength for the welds joining the SRLF structural members were established in accordance with the Structural Welding code (AWS 1992), and the Manual of Steel Construction (AISC 1989). These force per unit length values are determined based on the minimum ultimate strength (F_{uwm}) of the weld metal, and the thickness (t_w) of the weld as follows:

Weld Metal Ultimate Strength, F_{uwm} = 70,000 lbf/in^2

<u>Fillet</u> Weld Ultimate Strength, F_{uw} = $0.707 \times t_w \times F_{uwm}$ lbf/in

<u>Fillet</u> Weld Allowable Strength[1], F_w = $0.30 \times F_{uw}$ = $14{,}800 \times t_w$ lbf/in

4.0 CONFIGURATION AND LOADS

The configuration of the SRLF structure for core sampler truck 1 obtained from the design drawing H-2-91716 (WHC 1994b) is shown in Figures 1, 2, and 3. It is a space frame structure with welded joints. It is fabricated from various size structural steel tubes, except the two main members for the fixed frame portion are 6 inch deep channels. The fixed frame and its two bracing members are welded to the truck. The moveable portion is raised and lowered during normal operation by the two vertical actuators. Figure 1 also shows the location of the normal operation vertical static (deadweight) loads on the moveable portion of the structure. These loads (maximum) are: the sampler hoist shielded receiver box and base plate (1,900 lbf), plus the shielded sampler tube (2,800 lbf).

The maximum allowable speed on paved roadways is 15 mi/h for the core sampler truck 1. This limit was established to prevent truck rollover from the results of a previous analysis for core sampler truck 2 (WHC 1994a). The potential demands of transporting the SRLF on the truck at the 15 mi/h maximum allowed speed, also estimated by the rollover analysis for truck 2 (WHC 1994a), are represented as <u>additional</u> static forces on the SRLF. These are: 0.18 *g* vertical, 0.43 *g* longitudinal, and 0.37 *g* lateral. The moveable portion of the SRLF is only in the lowered position during transport.

5.0 STRUCTURAL ANALYSES AND RESULTS

Three dimension finite element static analyses were conducted for the SRLF structure (Images 1993) for the normal operation deadweight loads, and for deadweight combined with the additional transportation loads. Finite beam element models with the SRLF in the raised and lowered position were developed and used. Also, the fixed frame was both: modeled to be fully restrained at all welds to the truck, and with only the two braces providing the overturning restraint. Fully fixed joints were used in the finite element models, because the SRLF structural member ends are simply and directly welded together at the

[1]For fillet weld (t_w) = 3/16 in., (F_w) = 2775 lbf/in.

joints or connections. Four of the SRLF connections are stiffened with gusset plates.

Four deadweight loads analyses cases were run. This was necessary to obtain analyses results for the SRLF in both the raised and lowered position, and for the two restraint conditions assumed for the fixed frame. Four transportation loads analyses cases were run with the SRLF in the lowered position. This was necessary to obtain analyses results for both forward and aft direction longitudinal loads, and for the two restraint conditions assumed for the fixed frame. The finite (beam) element models are described in detail, and all the Images 1993 analyses results are provided in Appendix A.

The Images 1993 analyses results include the forces and moments in the members and joints, and the member stresses. The bending, axial, shear, and combined stresses are calculated for each beam element in the SRLF model. The maximum bending, shear, and combined stress values in the SRLF members for deadweight loads, and the transportation loads are listed and compared to the allowable in Table 1 and Table 2, respectively. All of the calculated potential stresses in SRLF structural members are within the allowable.

The stresses in the weld joints due to the member/joint forces and moments were calculated. Weld stress analysis methods from Blodgett 1982 were used. The weld joint stress calculations and evaluations are provided in Appendix B. Table 3 lists the maximum potential weld stresses for the normal deadweight loads, and transportation loads. For comparison, the allowable weld strengths for the welds are also listed in Table 3. All of the calculated potential weld stresses in the SRLF joints are within the allowable strengths. For the normal deadweight loads the calculated weld stresses, with few exceptions, are very low. For the additional transportation loads, most of the calculated weld stresses increase significantly. Two of the weld joint stresses essentially equal their allowable strength. Several others are within 20% of the allowable strength.

It was also necessary to use member/joint forces to calculate the bending stresses in the gusset plates that stiffen 4 joints in the SRLF. The maximum calculated bending stresses in the plates for the deadweight and transportation load cases are 10,318 lbf/in^2 and 14,085 lbf/in^2, respectively. These are within the 23,760 lbf/in^2 allowable bending stress.

6.0 REFERENCES

AISC, 1989, *Manual of Steel Construction, Allowable Stress Design*, Ninth Edition, American Institute of Steel Construction, Chicago, Illinois.

ASTM, 1989, *Annual Book of ASTM Standards*, American Society for Testing and Materials, Philadelphia, Pennsylvania.

AWS, 1992, *Structural Welding Code-Steel*, ANSI/AWS D1.1-92, American Welding Society, Miami, Florida

Blodgett, O. W., 1982, *Design of Welded structures*, James F. Lincoln Arc Welding Foundation, Cleveland, Ohio

Images, 1993, *Interactive Microcomputer Analysis and Graphics of Engineering Systems, IMAGES-3D*, Version 3.0, RLCA/Celestial Software, Berkeley, California.

WHC, 1994a, *Rollover Analysis of Rotary Mode Core Sampler Truck #2*, WHC-SD-WM-ER-391, Rev. 0, Westinghouse Hanford Company, Richland, Washington.

WHC, 1994b, *Shielded Receiver Lifting Frame Assembly, Core Sample Truck*, Drawing Number H-2-91716, Sheets 1 to 4, Westinghouse Hanford Company, Richland, Washington.

FIGURE 1: SHIELDED RECEIVER LIFTING FRAME ASSEMBLY

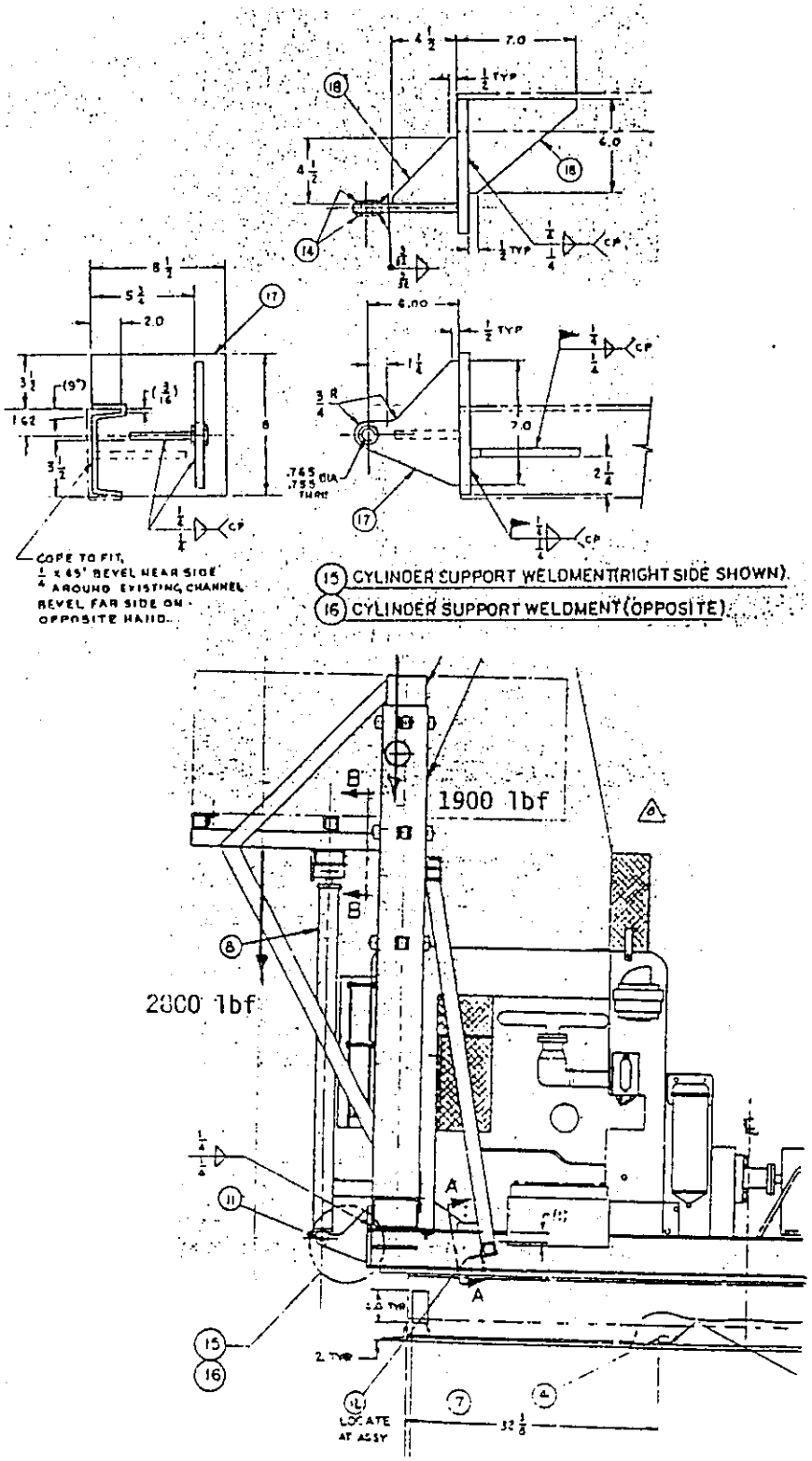

FIGURE 2: SHIELDED RECEIVER SUPPORT FRAME ASSEMBLY

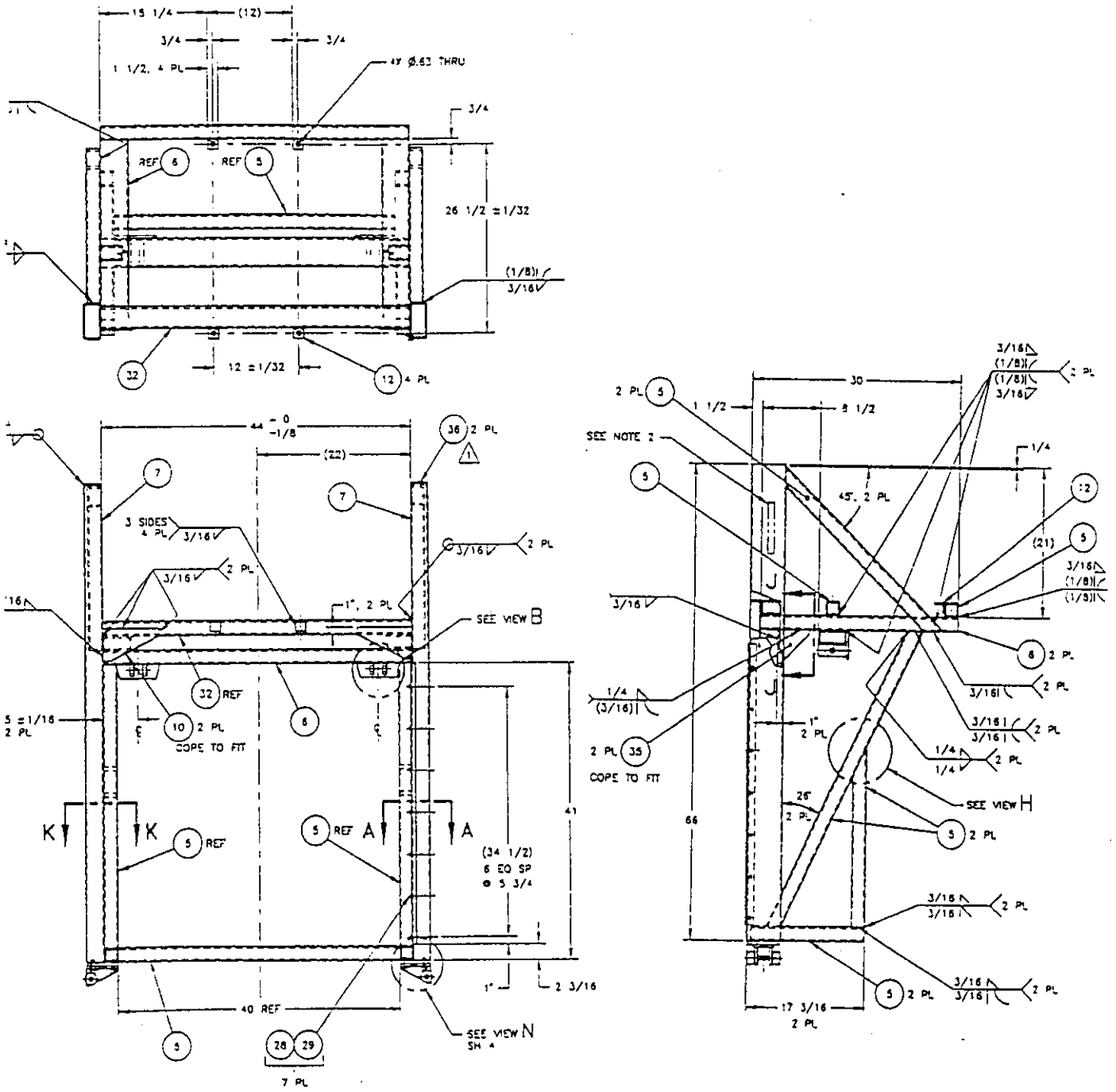

FIGURE 3: SHIELDED RECEIVER FIXED SUPPORT FRAME ASSEMBLY

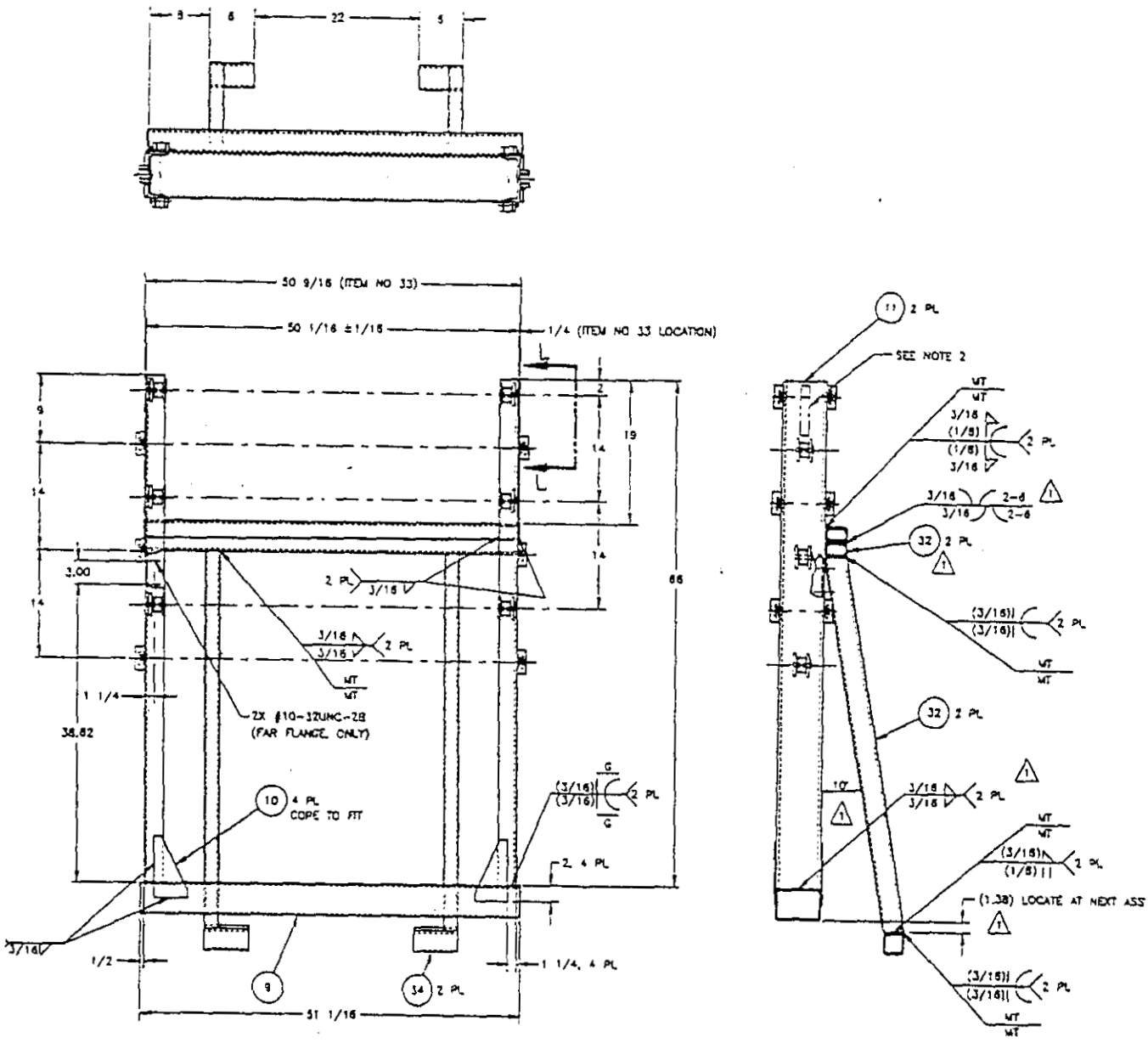

Table 1. Maximum Member Stresses Normal Deadweight Loads

Member*	Type of Stress	Maximum (lbf/in^2)	Allowable (lbf/in^2)
40	Axial	518	21600
41	Bending	7475	23760
107	Shear	8019	14400
39	Combined**	7970	23760

Table 2. Maximum Member Stresses Deadweight Plus Transportation Loads

Member*	Type of Stress	Maximum (lbf/in^2)	Allowable (lbf/in^2)
82	Axial	2364	21600
44	Bending	18180	23760
16	Shear	4708	14400
41	Combined**	21300	23760

*Beam number from Images-3D Model, see Appendix A.
**Mostly bending stress, use bending stress allowable.

Table 3. Calculated and Allowable Weld Stresses

Joining Members	Calculated Weld Stress (lbf/in)		Allowable Weld Stress** (lbf/in)
	Deadweight	Transportation	
11 to 9*	268	2091	2775
5 to 5 bracing	139	429	2775
5 to 6 bracing	635	1658	2775
5 to 6 upper bracing	406	861	2775
5 to 6 cross members	156	426	2775
32 to 11*	136	1445	2775
32 to 32*	81	1765	2775
32 to 34*	119	1640	2775
34 to rig*	118	2714	2775
5 to 7 upper bracing	247	327	2775
5 to 6 cross members	1202	2299	2775
6 to 6 main cross member	1976	2355	2775
6 to 7 Gusset to 10	1036 743	1900 1363	2775 2775
32 to 7 end weld	1273	2535	2775
6 to 7 gusset to 35	3222	4399	5550 (t_w = 3/8 in.)
6 to 7 weld on side of members	306	1635	2775
5 to 5 lower bracing	63	687	2775
5, 5 to 7 lower bracing to vertical tube	114 145	713 326	2775 2775
5 to 5 lower bracing	64	1425	2775
Actuator support (90° joint)	976	1133	3700 (t_w = 1/4 in.)
Actuator support to C 5x9	3/16" fillet equiv reqd	3/16" fillet equiv reqd	3/4" weld thickness available

*Fixed frame joint
**For fillet weld thickness (t_w) = 3/16 in. unless otherwise specified.

Appendix C: Structural and Stress Analysis, Shielded Receiver Lifting Frame and Jack Assemblies, Core Sample Truck #3 and #4

TSH

ENGINEERING DATA TRANSMITTAL

Page 1 of 1

1. EDT № 612145

2. To: (Receiving Organization) Characterization Equipment	3. From: (Originating Organization) Life Extension Engineering	4. Related EDT No.: N/A
5. Proj./Prog./Dept./Div.: Tank Farms	6. Cog. Engr.: F. R. Vollert	7. Purchase Order No.: N/A
8. Originator Remarks: For review and approval.		9. Equip./Component No.: N/A
		10. System/Bldg./Facility: N/A
11. Receiver Remarks:		12. Major Assm. Dwg. No.:
		13. Permit/Permit Application No.: N/A
		14. Required Response Date: 07/28/95

15. DATA TRANSMITTED

(A) Item No.	(B) Document/Drawing No.	(C) Sheet No.	(D) Rev. No.	(E) Title or Description of Data Transmitted	(F) Impact Level	(G) Reason for Transmittal	(H) Originator Disposition	(I) Receiver Disposition
1	WHC-SD-WM-ER-469		0	STRUCTURAL AND STRESS ANALYSES, SHIELDED RECEIVER LIFTING FRAME AND JACK ASSEMBLIES, CORE SAMPLER TRUCKS #3 AND #4	Q	1	1	

16. KEY

Impact Level (F)	Reason for Transmittal (G)	Disposition (H) & (I)
1, 2, 3, or 4 (see MRP 5.43)	1. Approval 2. Release 3. Information 4. Review 5. Post-Review 6. Dist. (Receipt Acknow. Required)	1. Approved 2. Approved w/comment 3. Disapproved w/comment 4. Reviewed no/comment 5. Reviewed w/comment 6. Receipt acknowledged

17. SIGNATURE/DISTRIBUTION (See Impact Level for required signatures)

(G) Reason	(H) Disp.	(J) Name	(K) Signature	(L) Date	(M) MSIN	(J) Name	(K) Signature	(L) Date	(M) MSIN	(G) Reason	(H) Disp.
1		Cog.Eng. F. R. Vollert	F.R. Vollert	7/5/95	H5-52						
1	1	Cog. Mgr. K. V. Scott	K.V. Scott	7-14-95	H5-52						
1		QA J. J. Verderber			S1-57						
1		J. L. Smalley			R1-17						
1		R. J. Blanchard			R1-17						
1		T. S. Hundal	T S Hundal	7/5/95	H5-52						
1		H. H. Ziada	Hasan H. Ziada	7-7-95	H5-52						

18.	19.	20.	21. DOE APPROVAL (if required) Ltr. No. N/A
F. R. Vollert	R. J. Blanchard	K. V. Scott	[] Approved [] Approved w/comments [] Disapproved w/comments
Signature of EDT Originator / Date	Authorized Representative for Receiving Organization / Date	Cognizant/Project Engineer's Manager / Date	

BD-7400-172-2 (07/91) GEF097

SUPPORTING DOCUMENT

1. Total Pages

2. Title

STRUCTURAL AND STRESS ANALYSES, SHIELDED RECEIVER LIFTING FRAME AND JACK ASSEMBLIES, CORE SAMPLER TRUCKS #3 AND #4

3. Number

WHC-SD-WM-ER-469

4. Rev No.

0

5. Key Words

Core Sampler Trucks #3 and #4, Shielded Receiver Lifting Frame (SRLF), Finite Element Static Three Dimensional Structural Analyses, Deadweight (normal) and Transportation Loads, Member and Welded Joint Forces and Stresses, Three Jack Assemblies, Vertical and Horizontal Loads.

6. Authors

Name: F. R. Vollert/T. S. Hundal

F.R. Vollert 7/5/95
Signature

T S Hundal 7/5/95
Signature

Organization/Charge Code: 74410/N4XB1

7. Abstract

Structural and stress analyses have been completed for the shielded receiver lifting frame (SRLF), and the jack assemblies mounted on core sampler trucks #3 and #4.

The SRLF is a space frame structure fabricated from structural steel tubes and channels, with welded joints. Analyses cases were run for the deadweight loads and the deadweight combined with loads representing potential transportation demands. Three dimensional, static finite element analyses were conducted. The analyses results include: the structural member stresses, and the forces in the welded joints. The joint forces were used to calculate the weld stresses. The member and weld stresses were determined to be in conformance with AISC 1989 and AWS 1992. The analyses results, particularly for the welds, do not predict the potential affects of residual stresses, cyclic stress, stress concentrations, and potential defects. Therefore, it is recommended that the welded joints, including the attachments to the truck, be thoroughly cleaned and visually inspected frequently.

The front, center and rear jack assemblies are beam structures connected to the trucks. Stress analyses were conducted for the vertical forces applied by the jacks. Also, horizontal jack forces were considered for the front and rear assemblies. For the vertical loads, the member, weld, and bolt stresses in the load paths to the truck were determined to be in conformance with AISC 1989 and AWS 1992. The assemblies have low capacity for horizontal jack loads. Finally, these assemblies are frequently used lifting fixtures for the trucks and core sampling equipment. They should have frequent, comprehensive preventive maintenance (PM) visual inspections for structural distress.

8. RELEASE STAMP

A-6400-073 (08/94) WEF124

CONTENTS

PAGE

1.0 INTRODUCTION 1

2.0 CONCLUSIONS AND RECOMMENDATIONS 2

3.0 MATERIALS AND ALLOWABLE STRESSES 3
3.1 STRUCTURAL STEEL STRENGTH AND ALLOWABLE STRESSES 4
3.2 WELD ALLOWABLE STRENGTH 4
3.3 BOLT ALLOWABLE STRESSES 5

4.0 CONFIGURATION AND LOADS 5
4.1 SHIELDED RECEIVER LIFTING FRAMES 5
4.2 JACK ASSEMBLIES 5

5.0 STRUCTURAL ANALYSES AND RESULTS 9
5.1 SHIELDED RECEIVER LIFTING FRAME ANALYSES 9
5.2 JACK ASSEMBLY ANALYSES 12
5.2.1 Front Jack Assembly 12
5.2.2 Rear Jack Assembly 13
5.2.3 Center Jack Assembly 13

6.0 ROLLOVER STABILITY ANALYSES 14

7.0 REFERENCES 17

APPENDIX A - FINITE BEAM ELEMENT ANALYSES, SHIELDED RECEIVER LIFTING FRAME, CORE SAMPLER TRUCKS #3 AND #4

APPENDIX B - STRESS ANALYSES, WELDED JOINTS, SHIELDED RECEIVER LIFTING FRAME, CORE SAMPLER TRUCKS #3 AND #4

APPENDIX C - STRESS ANALYSES, JACK ASSEMBLIES, CORE SAMPLER TRUCKS #3 AND #4

STRUCTURAL AND STRESS ANALYSES, SHIELDED RECEIVER LIFTING FRAME AND JACK ASSEMBLIES, CORE SAMPLER TRUCKS #3 AND #4

1.0 INTRODUCTION

Stress analyses and structural evaluations have been conducted for the shielded receiver lifting frames (SRLF) and the jack assemblies mounted on core sampler trucks number 3 and 4. The SRLF was analyzed for the normal operational static vertical (deadweight) loads. It was also analyzed to determine the effects of the deadweight loads combined with additional static vertical and horizontal loads intended to account for the potential demands of transporting the SRLF on the truck. The front, center, and rear jack assemblies including their connections or attachments to the trucks were analyzed for vertical forces applied when the jacks are deployed. These analyses also computed the maximum capacities for concurrent horizontal jack forces for the front and rear jack assemblies.

The SRLF is a space frame structure with welded joints (WHC 1995a). It is fabricated from various size structural steel tubes, except the two main members for the fixed frame portion are 6 inch deep channels. The objectives of the structural analyses include determining and evaluating the stresses in the frame members and the weld joints. Three dimensional static finite beam element analyses of the SRLF were conducted (Images 1993). The models used represent the SRLF in the raised and lowered position, and envelope the restraint provided by the welded attachments to the truck. Fully fixed joints were used in the finite element models. The results were member stresses and joint forces. The joint forces were used to calculate the weld stresses for the joints with methods from Blodgett 1982. The member and weld stresses were evaluated and determined to be in conformance with AISC 1989 and AWS 1992. However, AISC 1989 and AWS 1992 advise that successful welded connections require detailing considerations and precautions for residual welding stresses, load or stress distribution, cyclic stresses, and stress raisers or defects. The SRLF structural member ends are simply and directly welded together. Therefore, the analyses do not predict the potential effects of these factors. To compensate, the SRLF welds including the attachments to the truck should frequently be cleaned and visually inspected.

The front jack assembly is a simple beam (W 5x16) with a center mounted jack. The center jack assemblies (two per truck) act as cantilever beams (W 14x22) with concentrated end loads from the jacks. The rear jack assembly is a simple beam (W 14x22) supported or lifted by end mounted jacks, with concentrated loads at the two attachment points to the truck chassis (WHC 1995b). The objectives of the jack assembly analyses were to calculate the stresses for and evaluate all the structural members, joints (e.g., welds and bolts) and connections in the load path from the jacks and bolsters to the truck chassis. Standard design stress analysis methods for structural steel beam type members and their connections were used. The member, bolt, and weld stresses were determined to be in conformance with AISC 1989 and AWS 1992. The jack assemblies are lifting fixtures for the core sampler trucks, drilling platforms, and the SRLF (with receiver and sample tube). The assemblies will be in frequent use. The front and rear assemblies are potentially stressed near their design allowables in some locations. The assemblies including the

attachments to the trucks should, as preventative maintenance (PM), be thoroughly cleaned and visually inspected frequently.

In addition, a roll over evaluation was performed. The results were used to develop the recommended maximum acceptable speed for trucks 3 and 4.

2.0 CONCLUSIONS AND RECOMMENDATIONS

The SRLF structural analyses results are the stresses and joint forces for the structural members. The joint forces were then used to calculate the welded joint stresses, including the stresses in the gusset plates that stiffen four joints. These calculated member and weld stresses all are within the allowable values. The allowable fillet weld stress basis is the shear stress value at its throat. The AISC 1989 and AWS 1992 further advise that successful welded connections require detailing considerations and precautions for residual welding stresses, load or stress distribution, cyclic stresses, and stress raisers or defects. The SRLF structural member ends are simply and directly welded together. Connection hardware and detailing precautions, e.g., clip angles, which balance joint forces, avoid defects and stress raisers, and minimize residual and secondary stresses, were not used. Therefore, the analyses and the results do not predict or incorporate the potential affects of:

Residual stresses due to fabrication (welding)

Cyclic stress changes during operation and transportation (fatigue)

Stress concentrations, sharp corners, and potential defects in the welded joints

The computed stresses in the members and welds would directly superimpose with residual stresses. This increases the potential for over stresses under all load conditions, particularly for the welds. Cyclic stresses have the potential to initiate and propagate fatigue cracks. Again, the welds with the higher likelihood for stress concentrations and defects are the most vulnerable. Comprehensive analyses to account for these potential effects could be conducted. A number of enveloping assumptions would be necessary. It is believed that, after further analyses, too many uncertainties would remain to eliminate this concern.

It is recommended that the weld joints in the SRLF and the attachments to the truck be thoroughly cleaned and visually inspected frequently. For example, inspect after each 30 days of operation, and after each relocation to another tank farm. The inspections would be for evidence of structural and joint distress including cracks. They should be frequent, because visual inspection may not be able to find cracks before they have advanced considerably.

In the event SRLF structural distress occurs where joint repair is necessary, evaluation should be made to determine if the design details can be readily improved.

For all three jack assemblies subject to the given (WHC 1995c) maximum vertical jack loads only, the calculated member stresses, welds stresses, bolt forces, and bearing loads are within the allowable values and capacities. The jack assemblies are not designed to support horizontal jack loads. Therefore, one recommendation is to post signs on the trucks to warn against allowing side loads on the jacks. Another is that the operating procedures include precautions to prevent the application of any side loads on the jacks.

The front jack maximum vertical 11,100 lbf (WHC 1995c) load alone will develop about 82% of the allowable shear force capacity in the 5/8-in. SAE Grade 8 bolts in the connection to the truck chassis. Therefore, about a 450 lbf horizontal concurrent load on the front jack will over stress these bolts in shear.

The rear jack assembly vertical load capacity is governed by the stress in the 3/16-in. fillet welds to the truck chassis. The 10,000 lbf (WHC 1995c) maximum vertical rear jack loads develop 58% of the allowable stress capacity in these welds. The bolsters on the rear assembly highly limit the capacity for horizontal jack loads. A 500 lbf horizontal rear jack load in the forward or aft longitudinal direction will develop the allowable bending stress capacity in the 1/4-in. thick bolster end plates. A 1,250 lbf horizontal jack load in the left or right lateral direction will develop the allowable stress in the attachment welds for the jack mounting plates on the bolsters.

The center jack given vertical 10,000 lbf design load (WHC 1995c) would develop 55% of the allowable stress capacity in the 3/16-in. fillet welds attaching the end plate to the W 14x22 beam. An evaluation of the center jack assembly for horizontal jack loads was not required.

The jack assemblies are lifting fixtures for the core sampler trucks, drilling platforms, and the SRLF (with receiver and sample tube). The assemblies will be in frequent use. The front and rear assemblies, particularly if subjected to concurrent horizontal jack forces, are potentially stressed near their design allowables in some locations. The assemblies including the attachments to the trucks should, as preventative maintenance (PM), be thoroughly cleaned and visually inspected frequently. These should be comparable to the comprehensive inspections (third party) required for cranes and lifting fixtures with potential serious safety consequences due to failure, and conducted by qualified personnel. Major structural repair should be evaluated in advance by qualified engineering personnel. Damaged lifting fixtures will often be replaced, because the possible repairs could still leave uncertainties and safety concerns.

The recommended maximum acceptable speed for trucks 3 an 4 on Hanford site paved roads is 15 mi/h. This is the same as determined for truck 2 (WHC 1994a).

3.0 MATERIALS AND ALLOWABLE STRESSES

The design drawings (WHC 1995a), (WHC 1995b) for the SRLF and the jack assemblies specify either ASTM A36 or ASTM A500, Grade B steel for the structural tubes and channels. The steel plates and other components used are

ASTM A36. The weld metal used has a specified minimum ultimate strength of 70,000 lbf/in^2. Steel SAE Grade 8 bolts attach the front and center jack assemblies to the trucks. Finally, the truck chassis longitudinal steel members have a minimum ultimate tensile strength (F_u) of 103 $Kips/in^2$.

3.1 STRUCTURAL STEEL STRENGTH AND ALLOWABLE STRESSES

The strength, allowable stresses, and other material properties used for all the structural steel members and components in the SRLF and jack assemblies were established conservatively from ASTM A36 steel minimum specifications as follows:

Modulus of Elasticity, E	= 29,000,000 lbf/in^2
Shear Modulus, G	= 11,200,000 lbf/in^2
Poisons Ratio, μ	= 0.300
Ultimate Tensile Strength, F_u	= 58,000 lbf/in^2
Yield Strength, F_y	= 36,000 lbf/in^2
Allowable Tensile Stress, F_t	= 0.60 x F_y = 21,600 lbf/in^2
Allowable Bending Stress, F_b	= 0.66 x F_y = 23,760 lbf/in^2
Allowable Shear Stress, F_v	= 0.40 x F_y = 14,400 lbf/in^2

3.2 WELD ALLOWABLE STRENGTH

The ultimate and allowable strength for the welds joining the SRLF and jack assembly structural members were established in accordance with the Structural Welding Code (AWS 1992), and the Manual of Steel Construction (AISC 1989). These force per unit length values are determined based on the minimum ultimate strength (F_{uwm}) of the weld metal, and the thickness (t_w) of the weld as follows:

Weld Metal Ultimate Strength, F_{uwm} = 70,000 lbf/in^2

<u>Fillet</u> Weld Ultimate Strength, F_{uw} = 0.707 x t_w x F_{uwm} lbf/in

<u>Fillet</u> Weld Allowable Strength, F_w = 0.30 x F_{uw} = 14,800 x t_w lbf/in

3.3 BOLT ALLOWABLE STRESSES

Steel structural bolts, SAE Grade 8 (equivalent to ASTM A490), are used to attach the front and center jack assemblies to the core sampler trucks 3 and 4. The front assembly bolted connections to the chassis are bearing (shear) type. The allowable shear stress in these bolts is 28,000 lbf/in^2. The fixed end supports for the center jack assemblies are provided by end plates bolted to the truck frames. The fixed end moments when the center jacks are deployed will put these bolts in tension. The allowable tension stress in these bolts is 54,000 lbf/in^2. The allowable bolt bearing stress in the truck chassis members (1/4-in. thickness) is 1.5 x F_u, or 1.5 x 103 $Kips/in^2$ = 154 $Kips/in^2$.

4.0 CONFIGURATION AND LOADS

4.1 SHIELDED RECEIVER LIFTING FRAMES

The configuration of the SRLF structure for core sampler trucks 3 and 4 obtained from the design drawings H-2-690043 and H-2-690044 (WHC 1995a) is shown in Figures 1, 2, and 3. It is a space frame structure with welded joints. It is fabricated from various size structural steel tubes, except the two main members for the fixed frame portion are 6 inch deep channels. The fixed frame and its two bracing members are welded to the truck. The moveable portion is raised and lowered during normal operation by the two vertical actuators. Figure 1 also shows the location of the normal operation vertical static (deadweight) loads on the moveable portion of the structure. These loads (maximum) are: the sampler hoist shielded receiver box and base plate (2,100 lbf), plus the sampler tube (900 lbf).

The maximum allowable speed on paved roadways is 15 mi/h for the core sampler trucks 3 and 4. This limit was established to prevent truck rollover from the results of a previous analysis for core sampler truck 2 (WHC 1994a). The potential demands of transporting the SRLF on the truck at the 15 mi/h maximum allowed speed, also estimated by the rollover analysis for truck 2 (WHC 1994a), are represented as additional static forces on the SRLF. These are: 0.18 g vertical, 0.43 g longitudinal, and 0.37 g lateral (see Section 6.0). The moveable portion of the SRLF is in the lowered position during transport.

4.2 JACK ASSEMBLIES

The configurations of the front, center, and rear jack assemblies and their connections to core sample trucks 3 and 4 are shown by the design drawings (WHC 1995b). Configuration sketches are also included with the stress analyses in Appendix C. The front and rear assemblies are simple beams with bolted and welded connections, respectively, to the truck chassis. The center assemblies are cantilever beams bolted to the truck frames. Vertical static loads are applied to the assemblies when the jacks are deployed to lift or support the core sample trucks during operation.

Figure 1. Shielded Receiver Lifting Frame Assembly.

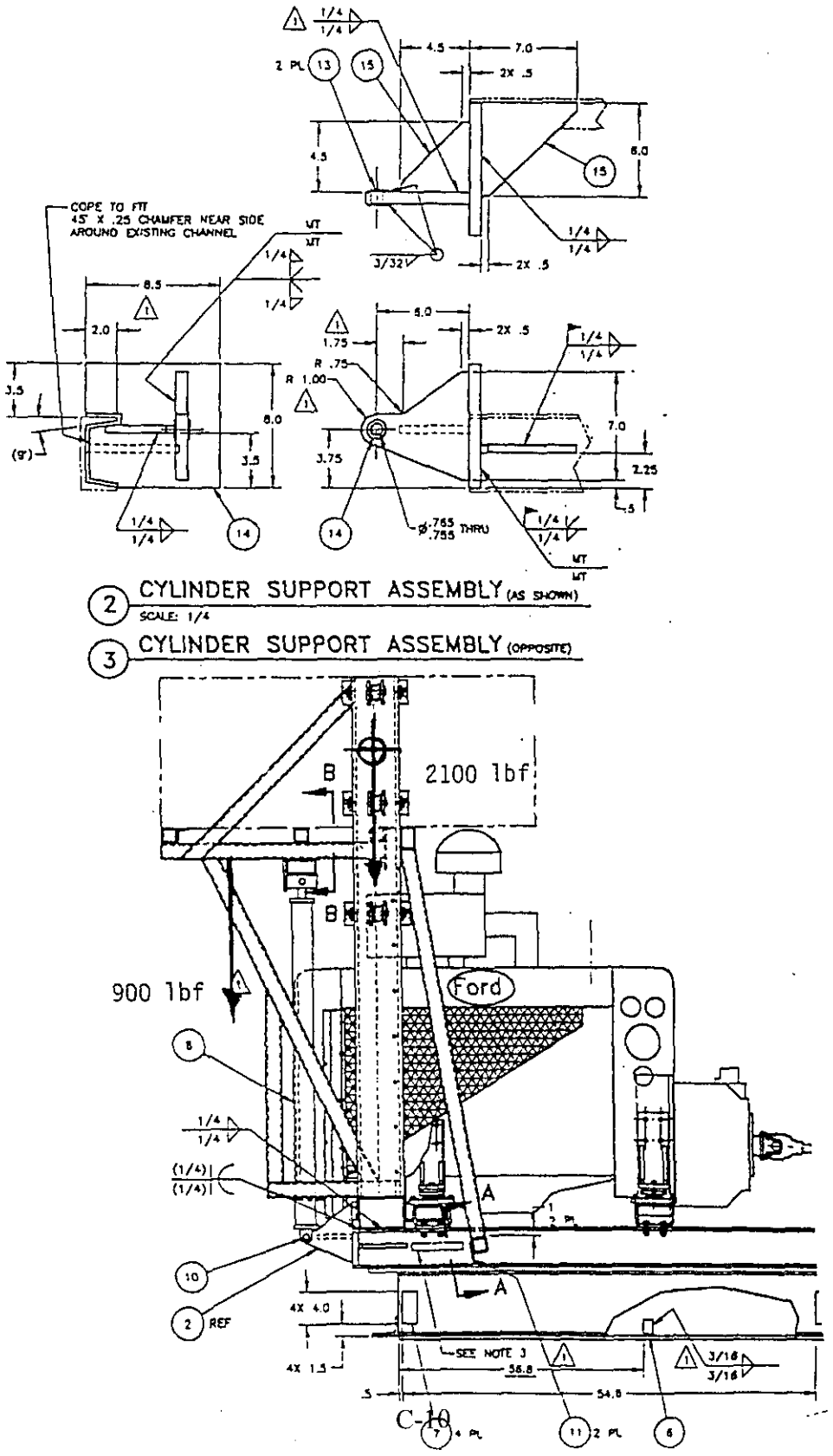

Figure 2. Shielded Receiver Support Frame Assembly.

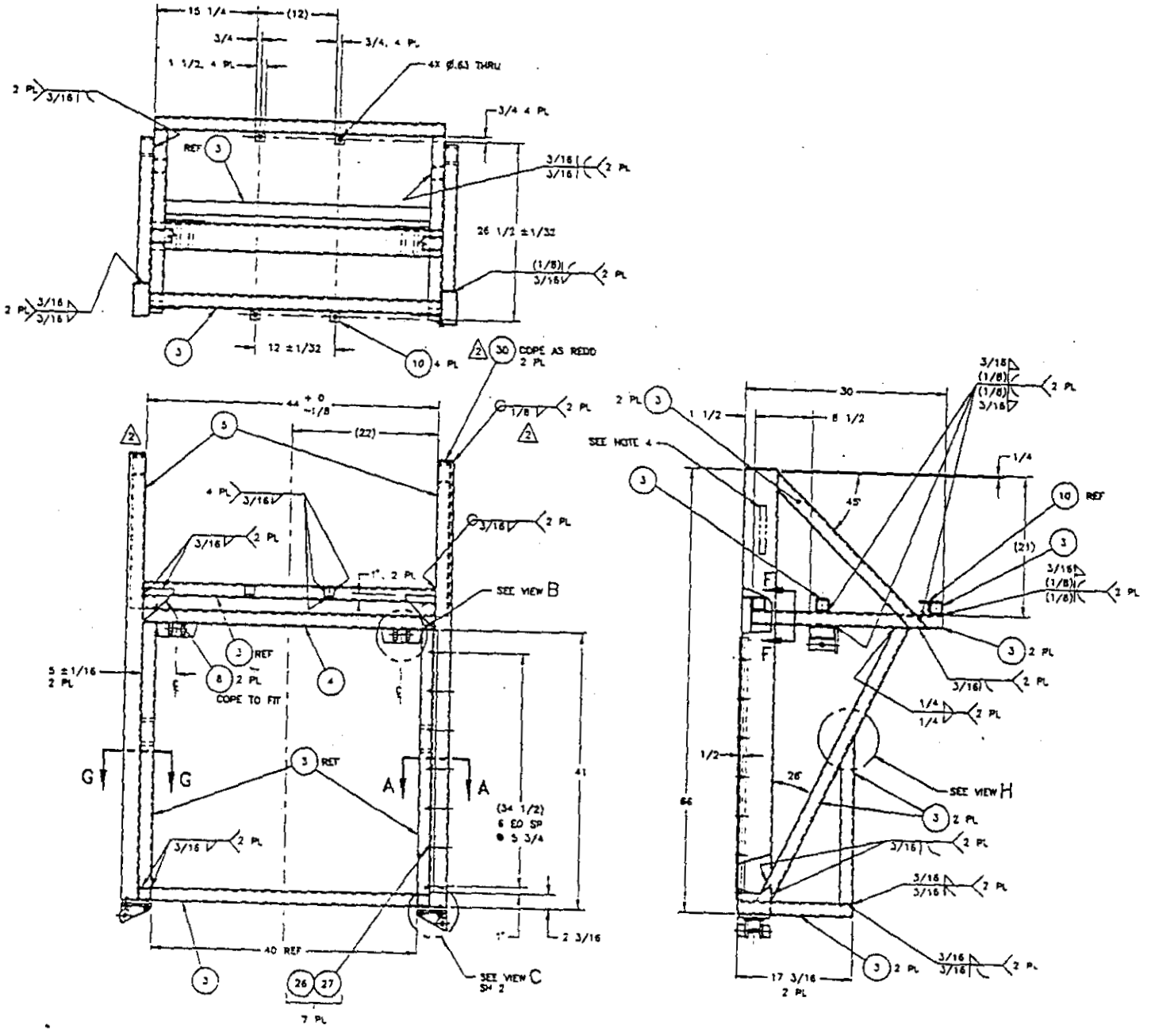

Figure 3. Shielded Receiver Fixed Support Frame Assembly.

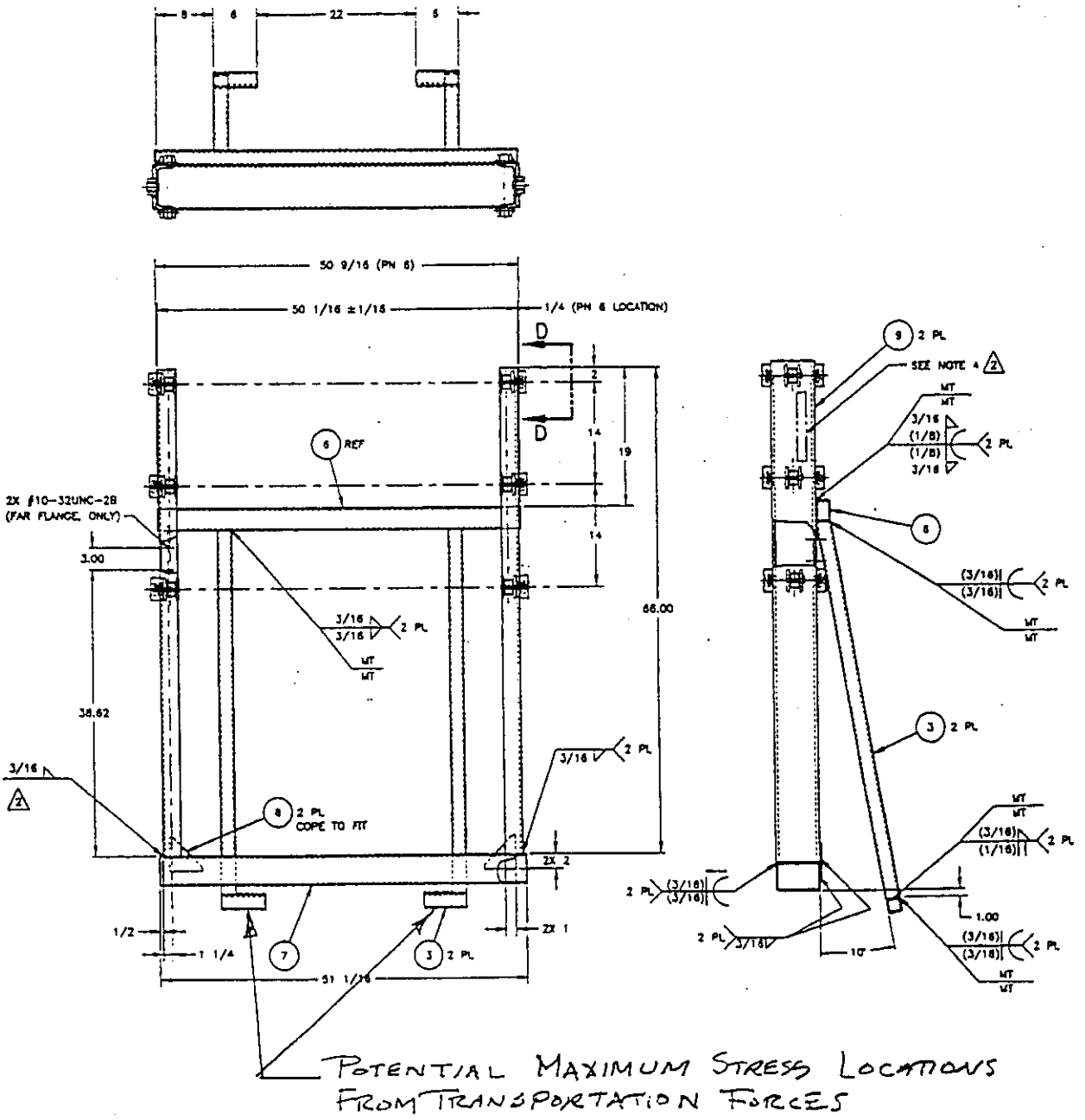

The front assembly maximum vertical load on the single center mounted jack is 11,100 lbf. The rear assembly maximum vertical load on each end mounted jack is 10,000 lbf. The maximum capacities for concurrent horizontal jack forces for the front and rear jacks were calculated. The center assemblies were analyzed for a 10,000 lbf vertical (upward) jack or end design load only (WHC 1995c).

5.0 STRUCTURAL ANALYSES AND RESULTS

5.1 SHIELDED RECEIVER LIFTING FRAME ANALYSES

Three dimensional finite element static analyses were conducted for the SRLF structure (Images 1993) for the normal operation deadweight loads, and for deadweight combined with the additional transportation loads. Finite beam element models with the SRLF in the raised and lowered position were developed and used. Also, the fixed frame was modeled two ways: to be fully restrained at all welds to the truck, and with only the two braces providing the overturning restraint. Fully fixed joints were used in the finite element models, because the SRLF structural member ends are simply and directly welded together at the joints or connections. Four of the SRLF connections are stiffened with gusset plates.

Four deadweight loads analyses cases were run. This was necessary to obtain results for the SRLF in both the raised and lowered position, and for the two restraint conditions assumed for the fixed frame. Four transportation load cases were run with the SRLF in the lowered position. This was necessary to obtain results for both forward and aft direction longitudinal loads, and for the two restraint conditions assumed for the fixed frame. The finite beam element models are described in detail, and all the Images 1993 analyses results are provided in Appendix A.

The Images 1993 results include the forces and moments in the members and joints, and the member stresses. The bending, axial, shear, and combined stresses are calculated for each beam element in the SRLF model. The maximum bending, shear, and combined stress values in the SRLF members for deadweight loads, and the transportation loads are listed and compared to the allowables in Table 1 and Table 2, respectively. All of the calculated potential stresses in SRLF structural members are within the allowable.

The stresses in the weld joints due to the member/joint forces and moments were calculated. Weld stress analysis methods from Blodgett 1982 were used. The weld joint stress calculations and evaluations are provided in Appendix B. Table 3 lists the maximum potential weld stresses for the normal deadweight loads, and transportation loads. For comparison, the allowable weld strengths for the welds are also listed in Table 3. All of the calculated potential weld stresses in the SRLF joints are within the allowable strengths. For the normal deadweight loads the calculated weld stresses, with few exceptions, are very low. For the additional transportation loads, most of the calculated weld stresses increase significantly. Three of the weld joint stresses essentially equal their allowable strength. Several others are within 20% of the allowable strength.

Table 1. Maximum SRLF Member Stresses, Normal Deadweight Loads.

Type of Stress	Maximum (lbf/in^2)	Allowable (lbf/in^2)
Bending(1)	9,274	23,760
Shear(2)	2,185	14,400
Combined(1)	9,618	23,760

(1) Maximum deadweight bending and combined stresses in the aft 2x2x1/4 tube cross member supporting the shielded receiver.

(2) Maximum deadweight shear stress in the 4x2x1/4 tube main cross member.

Table 2. Maximum SRLF Member Stresses, Deadweight Plus Transportation Loads.

Type of Stress	Maximum (lbf/in^2)	Allowable (lbf/in^2)
Bending	22,080	23,760
Shear	3,975	14,400
Combined	23,740	23,760

Note: All maximum transportation load stresses in the 2x2x1/4 tube members connecting the fixed frame to the truck frame.

Table 3. Calculated and Allowable SRLF Weld Stresses.

Joining Members	Calculated Weld Stress (lbf/in)		Allowable Weld Stress (lbf/in)
	Dead Weight	Transportation	
3 and 3 to 5 with gusset plates (3 joints)	1738 814 990	2387 2251 2525	2775 2775 2775
4 to 3 main cross member	744	969	2775
3 to 3 middle horizontal member	264	1978	2775
3 to 3 edge horizontal member	282	857	2546
3 to 5 top brace to vertical	295	447	2775
3 to 3 top brace to horizontal	280	413	2775
3 to 3 vertical to lower brace	100	236	2775
3 to 3 lower brace to horizontal	376	948	2775
3 to 3 bottom of vertical brace	66	531	2775
3 to 3 bottom of horizontal brace	103	1068	2775
3 and 3 to 5 (3 joints)	150 75 125	446 654 48	2775 2775 2775
6 to 9*	80	1584	2775
9 to 7*	199	4881	5550
7 to C 5x9* (on rig)	195	2589	2775
3 to 6* top of diagonal brace	173	2278	2775
3 to 3* bottom of diagonal brace	144	2336	2775
3 to rig* with gusset plates	237	2762	2775
Actuator support (90° joint)	647	1023	3700
Actuator support to C 5x9 (on rig)	3/16" fillet equivalent required	3/16" fillet equivalent required	1/2" weld thickness available

*Fixed Frame Joint

It was also necessary to use member/joint forces to calculate the bending stresses in the gusset plates that stiffen four joints in the SRLF. The maximum calculated bending stresses in the plates for the deadweight and transportation load cases are 6,992 lbf/in^2 and 10,413 lbf/in^2, respectively. These are within the 23,760 lbf/in^2 allowable bending stress.

5.2 JACK ASSEMBLY ANALYSES

The general scope of the jack assembly analyses was to calculate the stresses for the structural members and joints in the load path from the jack mounting plates and bolsters to the truck chassis. The front, center, and rear jack assemblies including their connections or attachments to the trucks were analyzed for vertical forces applied when the jacks are deployed. These analyses also presumed concurrent horizontal jack forces for the front and rear jack assemblies. The calculations for all three assemblies are provided in Appendix C.

5.2.1 Front Jack Assembly

The front jack assembly is a simple beam (W 5x16) with a single center mounted jack. On each end it is connected to the front ends of the truck chassis longitudinal members. These two connections (or pair) are 5-in. deep brackets fabricated from 3/4-in. plate. They are welded to the ends of the jack assembly, and attached to the chassis with 5/8-in. SAE Grade 8 bolts. The analyses were conducted for the maximum vertical front jack load, 11,100 lbf, and continued to estimate the capacity of the assembly for concurrent longitudinal and lateral jack loads.

For the 11,100 lbf vertical load only on the front jack, the analyses results are:

The maximum shear force in the 5/8-in. bolts is 7,088 lbf. This is about 82% of the allowable 8,600 lbf.

The bending stress in the main W 5x16 beam is 11,149 lbf/in^2 maximum, compared to 23,760 lbf/in^2 allowable.

The bending and shear stresses in the bracket connections to the truck chassis are 10,451 lbf/in^2 and 3,061 lbf/in^2, respectively. These values are within their allowables, 23,760 lbf/in^2 bending stress and 14,400 lbf/in^2 shear stress.

The stress in the 1/4-in. fillet welds attaching the brackets to the ends of the W 5x16 main beam is 336 lbf/in, well within the 3,700 lbf/in allowable.

The bearing stress from the bolts at the holes in the truck chassis members is 45.4 Kips/in^2. The allowable is 154 Kips/in^2.

The bearing load capacity for the 7-in. wide jack mounting plate, based on the W 14x22 web crippling potential, is 47.25 Kips. This is very sufficient for the 11.1 Kips maximum vertical jack load.

The shear forces in the 5/8-in. bolts attaching the front jack assembly to the chassis are at 82% allowable due to the 11,100 lbf maximum vertical jack load. Therefore, about a 450 lbf horizontal concurrent load on the jack over stresses these bolts.

5.2.2 Rear Jack Assembly

The rear jack assembly is a simple beam (W 14x22) supported (or lifted) by end mounted jacks, with concentrated loads at the two attachment points to the truck chassis. The attachments to the chassis are 1/4 in thick steel bracket plates welded to the flanges and web on the inside of the W 14x22 beam, and to one side of the chassis longitudinal members. The maximum vertical load on each rear jack is 10,000 lbf. It was also necessary to evaluate the horizontal jack load limits for this assembly.

For the 10,000 lbf maximum vertical rear jack load, the stress analyses results for this assembly are:

The maximum stress in the 3/16-in. fillet welds to the truck chassis is 1,610 lbf/in which is 58% of the allowable 2,775 lbf/in.

The maximum bending stress in the W 14x22 beam is 5,600 lbf/in^2, compared to 23,760 lbf/in^2 allowable.

The bearing load capacity, based on web crippling potential, for the bolsters supporting the jacks is 37 Kips. This is very sufficient for the 10 Kips maximum vertical jack load.

The bolsters on the rear jack assembly highly limit the capacity for horizontal jack loads. The design is very similar to the rear jack assembly for core sampler truck number 2. Therefore, the analyses and results for that assembly for horizontal loads apply (WHC 1994b). A 500 lbf horizontal jack load in the forward or aft longitudinal direction will develop the bending stress capacity in the 1/4-in. thick bolster end plates. A 1,250 lbf left or right lateral load will develop the stress capacity in the attachment welds for the jack mounting plates on the bolsters. The other components potentially over stressed by horizontal jack loads exceeding these values are: the main W 14x22 beam, both in bending and torsional shear, the mounting bolts for the jacks to the bolsters, and the attachment welds to the truck chassis.

5.2.3 Center Jack Assembly

The center jack assemblies (two per truck) act as cantilever beams (W 14x22) with concentrated end loads from the jacks. The fixed end supports are provided by the 3/4-in. thick end plates, welded to the end of the beam and bolted (1-in. and 3/4-in. SAE Grade 8 bolts) to the lower frames of the core sampler trucks. The assembly was analyzed for a 10,000 lbf vertical (upward) jack or end load. The analysis results are:

The bending stress in the W 14x22 beam is 10,600 lbf/in^2 maximum, the allowable is 23,760 lbf/in^2.

The maximum tension forces in the 1-in. and 3/4-in. bolts attaching the end plates to the truck are 9.3 Kips and 1.9 Kips, versus the 42.4 Kips and 23.9 Kips respective allowables.

The maximum stress in the cantilever beam end plate 3/16-in. fillet weld is 1,533 lbf/in which is 55% of the allowable 2,775 lbf/in.

The bearing load capacity, based on web crippling potential, for the bolster supporting the jack is 37 Kips. This is very sufficient for the 10 Kips maximum vertical jack load.

6.0 ROLLOVER STABILITY ANALYSES

The WHC 1994a rollover stability analysis for core sample truck number 2 which estimates the acceptable 15 mi/h limiting speed on Hanford site paved roads applies to trucks 3 and 4. The potential transportation acceleration loads at 15 mi/h will also be the same as for truck 2, 0.43g longitudinal, 0.37g lateral, and 0.18g vertical. Another analysis was required to estimate the minimum turning radii versus speed for differing roadway bank (super elevation) angles for trucks 3 and 4. Less restrictive turning radii are theoretically required for trucks 3 and 4.

The recommended 15 mi/h maximum speed for truck 2 (WHC 1994a) is governed by the center of gravity (cg) height for the truck with the drilling platform and its equipment. For truck 2 the cg height is 64.3 inches (WHC 1994a). For trucks 3 and 4 it is 60.0 inches, see Table 4, Weight Distributions for Core Sample Trucks 3 and 4 (WHC 1995c). To allow the speed limit for trucks 3 and 4 to increase by 1 mi/h to 16 mi/h, the cg height would have to be 57.0 inches or lower. This would increase the transportation loads by about 10%, which could affect the structural design for the SRLF. Therefore, the recommended maximum acceptable speed for trucks 3 and 4 on paved roads remains at 15 mi/h.

The WHC 1994a minimum turning radii analysis for truck 2 was repeated for trucks 3 and 4. Table 5 has the results, and the comparable results for truck 2 from WHC 1994a. Shorter turning radii are theoretically required for trucks 3 and 4 for given speeds and bank angles due to its lower cg. For both cases, about a 0.7 coefficient of friction is required to prevent skidding during minimum radii turns.

Table 4. Weight Distribution, Core Sample Trucks Number 3 & 4.

	Longitudinal, x(1) (in)	Lateral, y(1) (in)	Vertical, z(2)
Truck Chasis	120	0	21
Total	49	0	60

(1) Distance from veritical centerline of rotatiing platform, +x towards cab, and +y towards driver side.

(2) Distance from ground level, +z up.

Table 5. Theorectical Minimum Turn Radii Core Sample Trucks.

Trucks 3 and 4 with ß = 10° Body Roll				
Truck Speed (mi/h)	Bank Angle (deg)	Minimum Turn Radius[1] (ft)	With 0.37 *g* Force Minimum Turn Radius[1] (ft)	Coef Friction Req'd[2]
15	-10	33	165	0.69
	-3	24	60	0.69
	0	22	46	0.69
12	-10	21	105	0.69
	-3	16	38	0.69
	0	14	30	0.69
9	-10	12	59	0.69
	-3	9	22	0.69
	0	8	17	0.69

Truck 2 with ß = 10° Body Roll				
Truck Speed (mi/h)	Bank Angle (deg)	Minimum Turn Radius[1] (ft)	With 0.37 *g* Force Minimum Turn Radius[1] (ft)	Coef Friction Req'd[2]
15	-10	35	242	0.66
	-3	26	70	0.66
	0	23	52	0.66
12	-10	22	155	0.66
	-3	16	45	0.66
	0	15	33	0.66
9	-10	13	87	0.66
	-3	9	25	0.66
	0	8	19	0.66

[1]Minimum radius of turn without rollover.

[2]Minimum required coefficient of static friction between tires and roadway for no skidding.

7.0 REFERENCES

AISC, 1989, *Manual of Steel Construction, Allowable Stress Design*, Ninth Edition, American Institute of Steel Construction, Chicago, Illinois.

ASTM, 1989, *Annual Book of ASTM Standards*, American Society for Testing and Materials, Philadelphia, Pennsylvania.

AWS, 1992, *Structural Welding Code-Steel*, ANSI/AWS D1.1-92, American Welding Society, Miami, Florida

Blodgett, O. W., 1982, *Design of Welded structures*, James F. Lincoln Arc Welding Foundation, Cleveland, Ohio

Images, 1993, *Interactive Microcomputer Analysis and Graphics of Engineering Systems, IMAGES-3D*, Version 3.0, Celestial Software, Inc., Berkeley, California.

WHC, 1994a, *Rollover Analysis of Rotary Mode Core Sampler Truck #2*, WHC-SD-WM-ER-391, Rev. 0, Westinghouse Hanford Company, Richland, Washington.

WHC, 1994b, *Stress analysis of Jacks, Frame, and Bearing Connections and Drill Rod For Core Sampler Truck #2*, WHC-SD-WM-ER-392, Rev 0, Westinghouse Hanford Company, Richland, Washington.

WHC, 1995a, *Shielded Receiver Lifting Frame Assembly, Core Sample Truck*, Drawing Numbers H-2-690043 and H-2-690044, Westinghouse Hanford Company, Richland, Washington.

WHC, 1995b, *Rear, Center, and Front Jack Assemblies*, Drawing Numbers H-2-690010, H-2-690011, H-2-690017, and H-2-690106-1, Westinghouse Hanford Company, Richland, Washington.

WHC, 1995c, Internal Memo, J. L. Smalley to H. H. Ziada, *Estimates of Actual Loads For The Rotary Mode Core Sample Trucks #3 and #4*, Westinghouse Hanford Company, Richland, Washington.

APPENDIX A

FINITE BEAM ELEMENT ANALYSES

SHIELDED RECEIVER LIFTING FRAME

CORE SAMPLER TRUCKS # 3 & 4

INDEPENDENT REVIEW CHECKLIST

Document Reviewed Finite Element Analyses of Shielded Receiver Lifting Frame for Core Sampler Trucks No. 3 & 4

Author T. S. Hundal Document No. WHC-SD-WM-ER-469 Rev. 0

Yes	No	N/A	
[X]	[ ]	[ ]	Problem completely defined.
[X]	[ ]	[ ]	Necessary assumptions explicitly stated and supported.
[X]	[ ]	[ ]	Computer codes and data files documented.
[X]	[ ]	[ ]	Data used in calculations explicitly stated in document.
[X]	[ ]	[ ]	Data checked for consistency with original source information as applicable.
[X]	[ ]	[ ]	Mathematical derivations checked including dimensional consistency of results.
[X]	[ ]	[ ]	Models appropriate and used within range of validity or use outside range of established validity justified.
[X]	[ ]	[ ]	Hand calculations checked for errors.
[X]	[ ]	[ ]	Code run streams correct and consistent with analysis documentation.
[X]	[ ]	[ ]	Code output consistent with input and with results reported in analysis documentation.
[ ]	[ ]	[X]	Acceptability limits on analytical results applicable and supported. Limits checked against sources.
[ ]	[ ]	[X]	Safety margins consistent with good engineering practices.
[X]	[ ]	[ ]	Conclusions consistent with analytical results and applicable limits.
[X]	[ ]	[ ]	Results and conclusions address all points required in the problem statement.

MANDATORY Software QA Log Number FRV-95-019

F. R. Vollert 6/28/95

Reviewer Date

CONTENTS OF APPENDIX A

Section		Page
A1.	FINITE-ELEMENT MODELS	A-4
A2.	FINITE-ELEMENT ANALYSIS INPUTS AND OUTPUTS	A-31

A1. FINITE-ELEMENT MODELS

The Shielded Receiver Lifting Frame Assembly (SRLF) (Drawing H-2-690044, Sh. 1 & 2) is installed on the core sampler truck drill rig (Drawing H-2-690043) and supports the Shielded Receiver Assembly (Drawing H-2-90020). The Lifting Frame Assembly consists of two parts; the Moveable Frame Assembly shown on Drawing H-2-690044, Sh. 1 (Page A-6) to which the Receiver Assembly is attached, and the Stationary Fixed Support Frame Assembly as shown on Drawing H-2-690044, Sh. 2, (Page A-7) which provide alignment for the moveable frame. The moveable frame is raised and lowered by a pair of hydraulic cylinders. During transportation the moveable frame is in the down position and facing forward, while for operation it is in its full up position. Both frames are fabricated from standard structural steel shapes connected with welded joints.

The purpose of these analyses was to determine the forces in the welded joints and the stresses in the members of the SRLF. The analyses loads are: the receiver assembly deadweight, self weight of the frames, and potential transportation loads. To accomplish this, three dimensional finite-element models were generated for both frames utilizing the IMAGES-3D computer program. One model depicted the moveable frame located in the operating (up) position while the second located it in the transportation (down) position. Beam elements were used for all of the frame members and truss elements for the hydraulic cylinders. Lateral loading between the frames was accomplished with stiff linear springs located at the roller locations which were in contact. Pages A-8 through A-24 show various plots of the geometry models.

The Receiver Assembly deadweight was applied as uniform loads to the moveable frame's horizontal forward and aft members (P/N 3), at the attachment points. This is shown in on page A-25. In addition, the self weight of the frame was included by a 1G gravity load. The potential dynamic loads generated during transportation were applied in three orthogonal directions and were combined with the deadweight of frames and receiver in lower position and for two longitudinal load cases. One case being the aft load and the second as forward load condition. The aft (fx = +0.43G), forward (fx = -0.43G), side (fz = 0.37G) and vertical (fy = -.18G) loads applied to the frame assembly to simulate the effect of dynamic loading as reported in Rollover Analysis of Rotary Mode Core Sampler Truck #2 (WHC-SD-WM-ER-391, Rev.0). The boundary conditions imposed on the model included vertical restraint of the actuators and fixed joints between the drill rig and the Fixed Support Frame aft bracing horizontal members (P/N 3). The 6x4 tube steel bottom member (P/N 7) of the Fixed Support Frame was also restrained against translation and rotation about its torsional axis for one case and only against translation in the second case. These two boundary condition cases were analyzed to provide the worst case loads for these welded joints as well as other affected joints.

The input and output for each of the up/down deadweight and aft/forward transport finite-element models for each of the two boundary conditions is given in Section A2. The resulting weld joint forces, the maximum stresses in frame members and their evaluation are given in Appendix B.

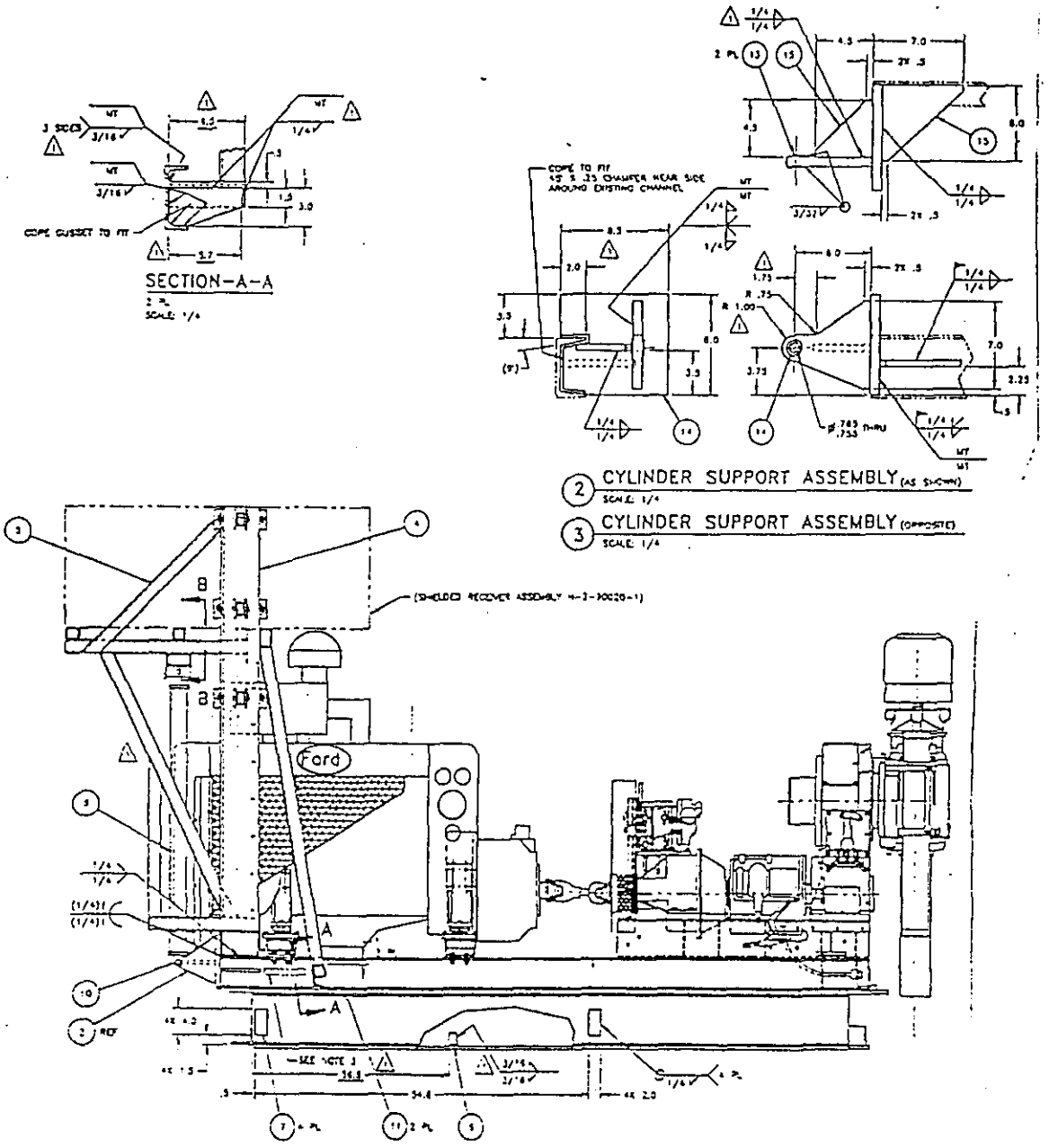
SECTION-A-A
SCALE: 1/4
COPE GUSSET TO FIT
CYLINDER SUPPORT ASSEMBLY (AS SHOWN)
SCALE: 1/4
CYLINDER SUPPORT ASSEMBLY (OPPOSITE)
SCALE: 1/4
Ford
DWG. H-2-690043

A-5

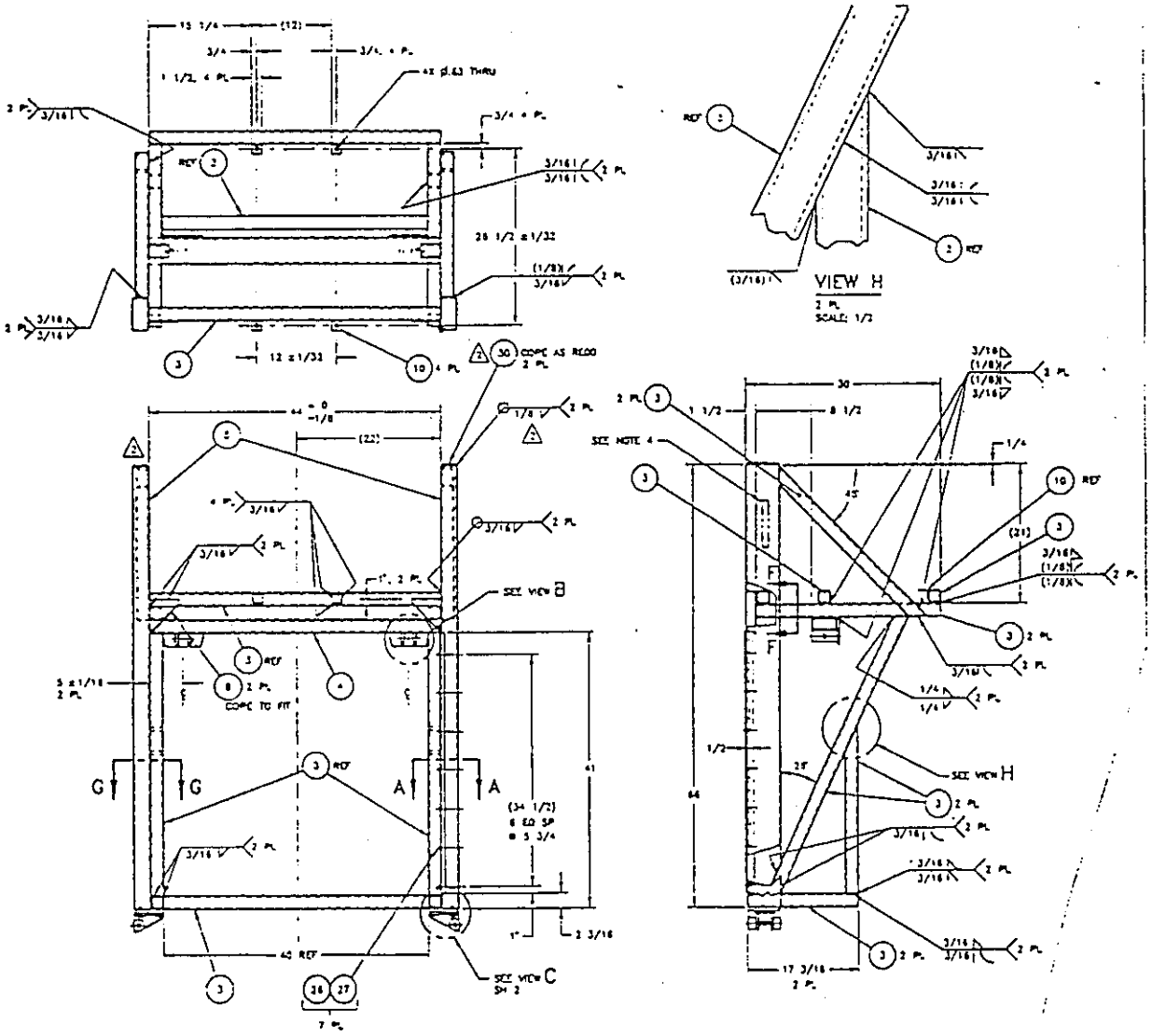

1 SUPPORT FRAME ASSEMBLY
SCALE: 1/8

DWG. H-2-690044 SH-1

A-6

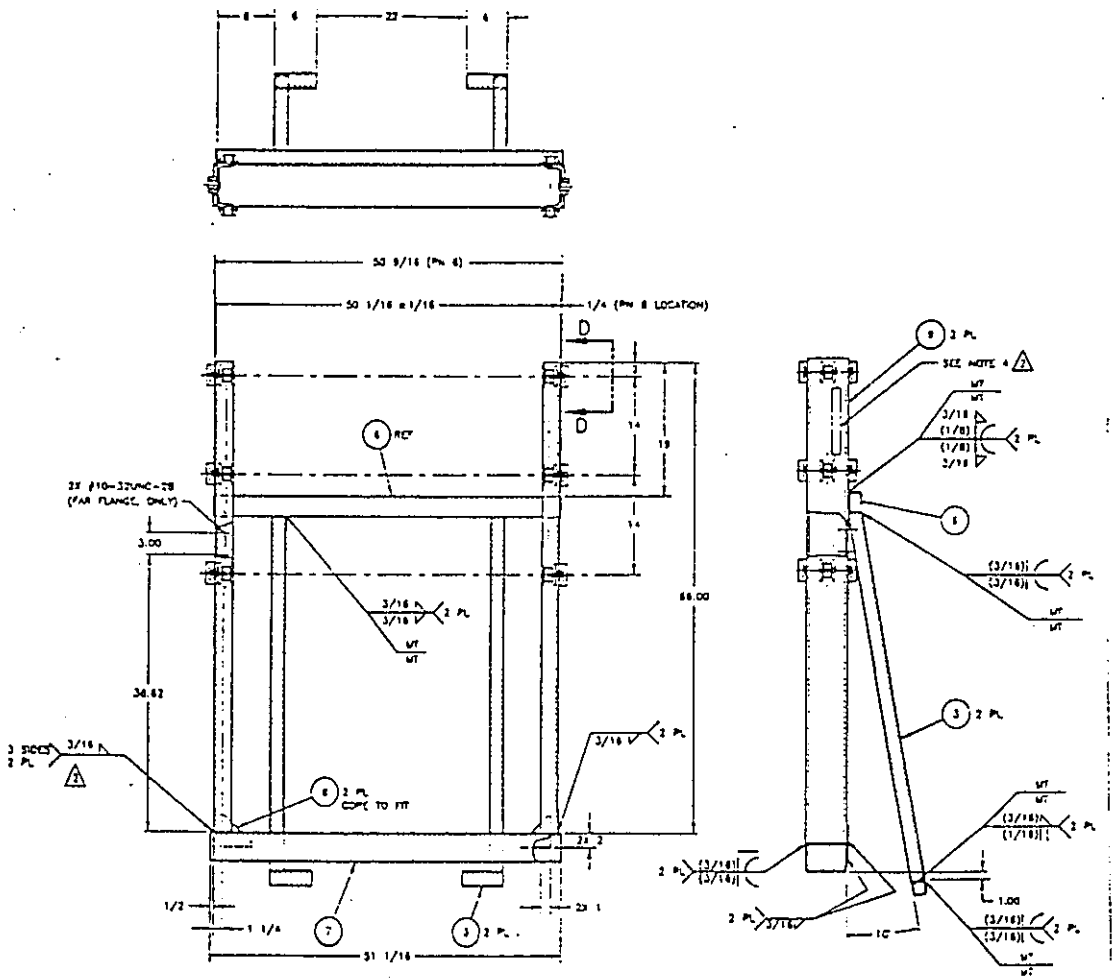

2 FIXED SUPPORT FRAME ASSEMBLY
SCALE: 1/8

DWG. H-2-690044 SH.2

A-7

IMAGES-3D
Ver. 3.0
Geometry Plot

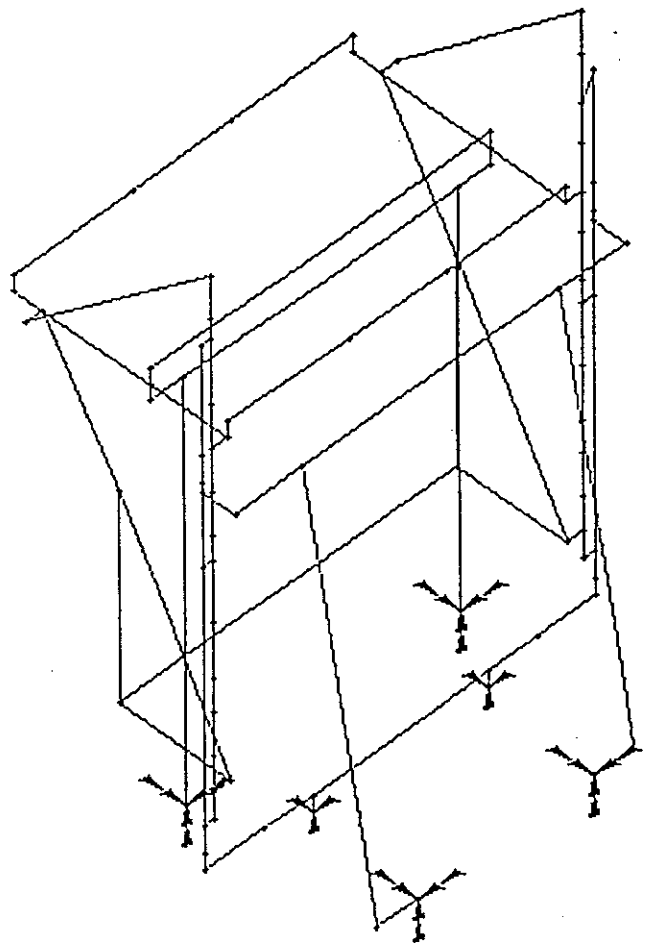

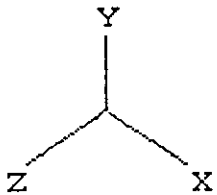

CORE SAMPLER TRUCK NOS.3 & 4 SHIELDED RECEIVER LIFTING FRAME 3/17/95
Wireframe Plot 15:27: 9

A-8

IMAGES-3D
Ver. 3.0
Geometry Plot

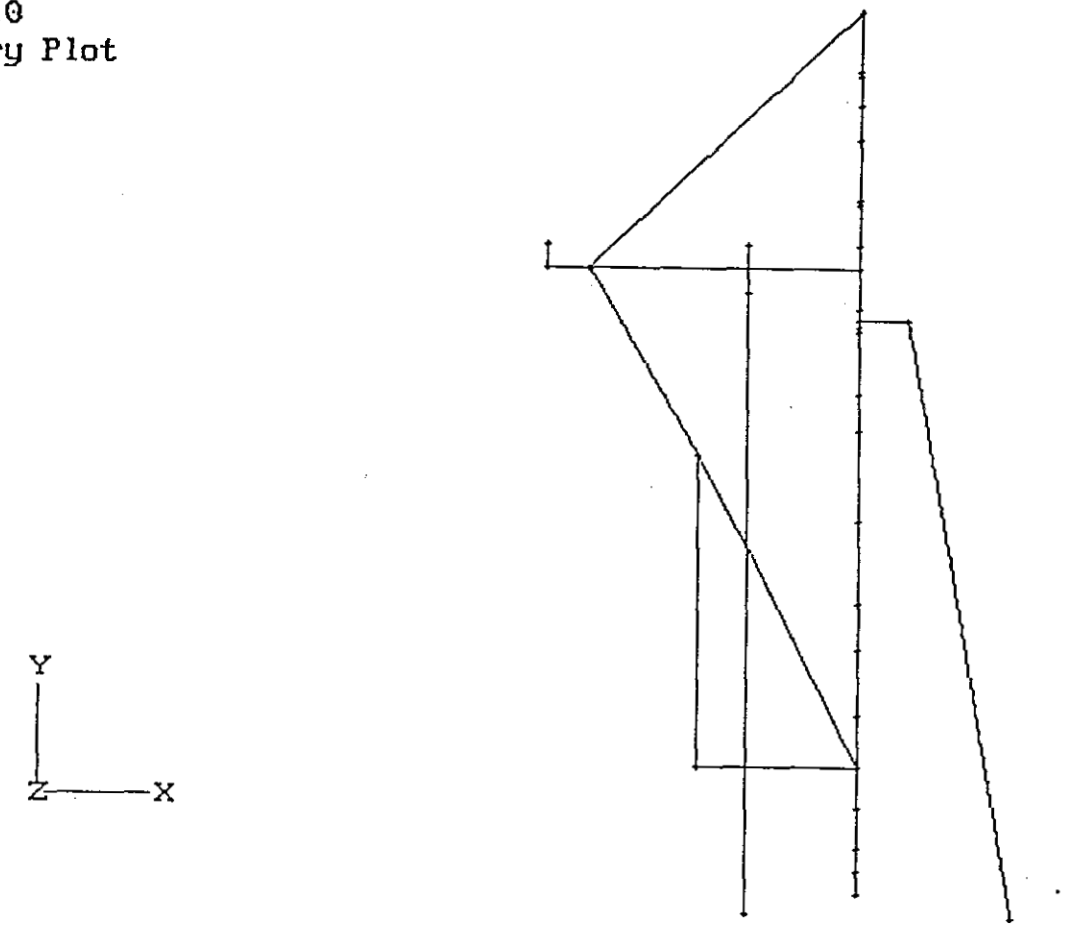

CORE SAMPLER TRUCK NOS.3 & 4 SHIELDED RECEIVER LIFTING FRAME 3/17/95
Wireframe Plot 15:31:41

A-9

IMAGES-3D
Ver. 3.0
Geometry Plot

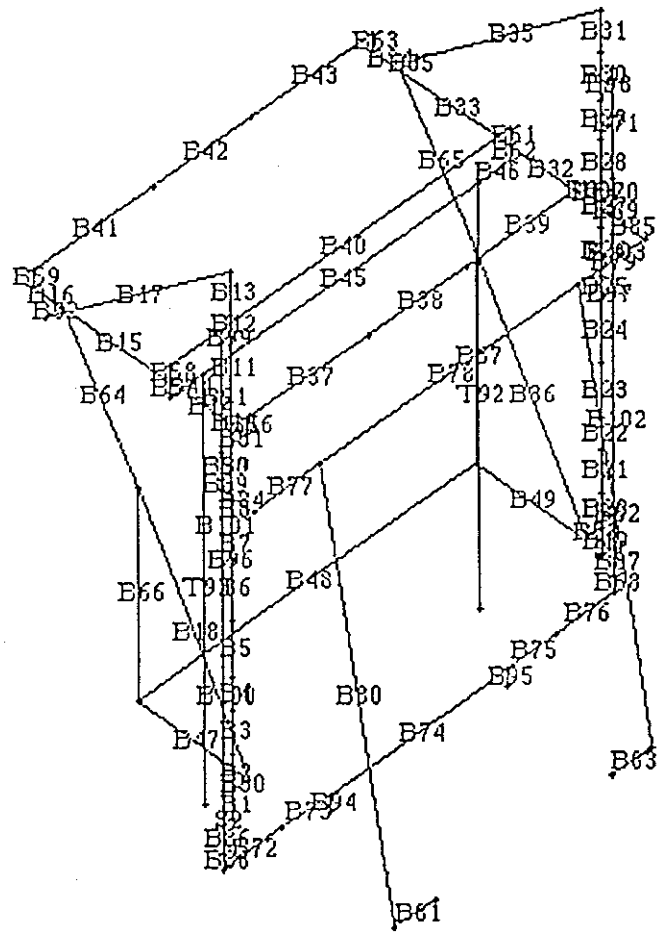

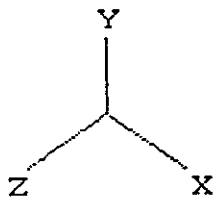

CORE SAMPLER TRUCK NOS.3 & 4 SHIELDED RECEIVER LIFTING FRAME 3/17/95
Wireframe Plot 15:21:24

A-10

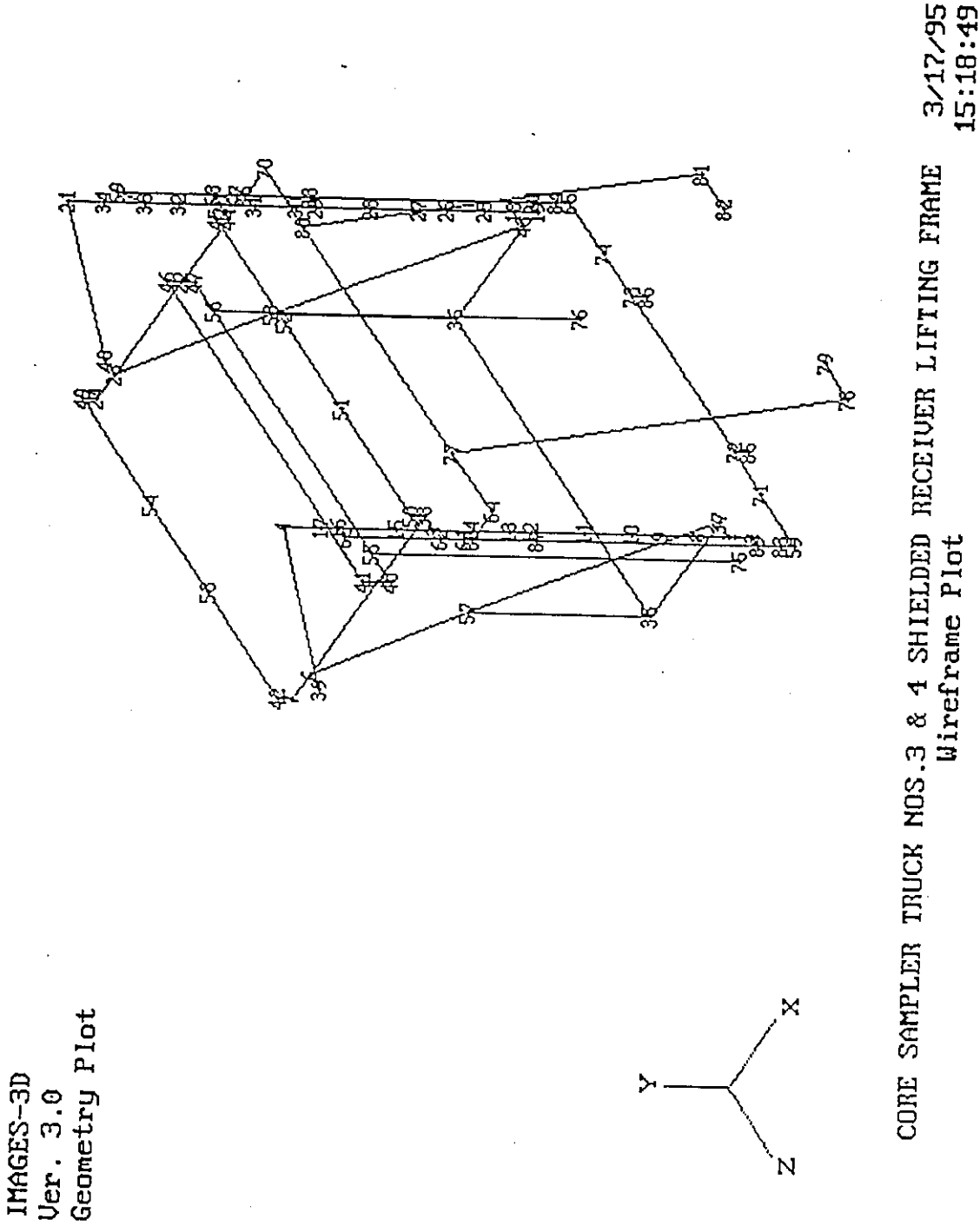
IMAGES-3D
Ver. 3.0
Geometry Plot
CORE SAMPLER TRUCK NOS.3 & 4 SHIELDED RECEIVER LIFTING FRAME
Wireframe Plot
3/17/95
15:18:49
X
Y
Z

A-11

IMAGES-3D
Ver. 3.0
Geometry Plot

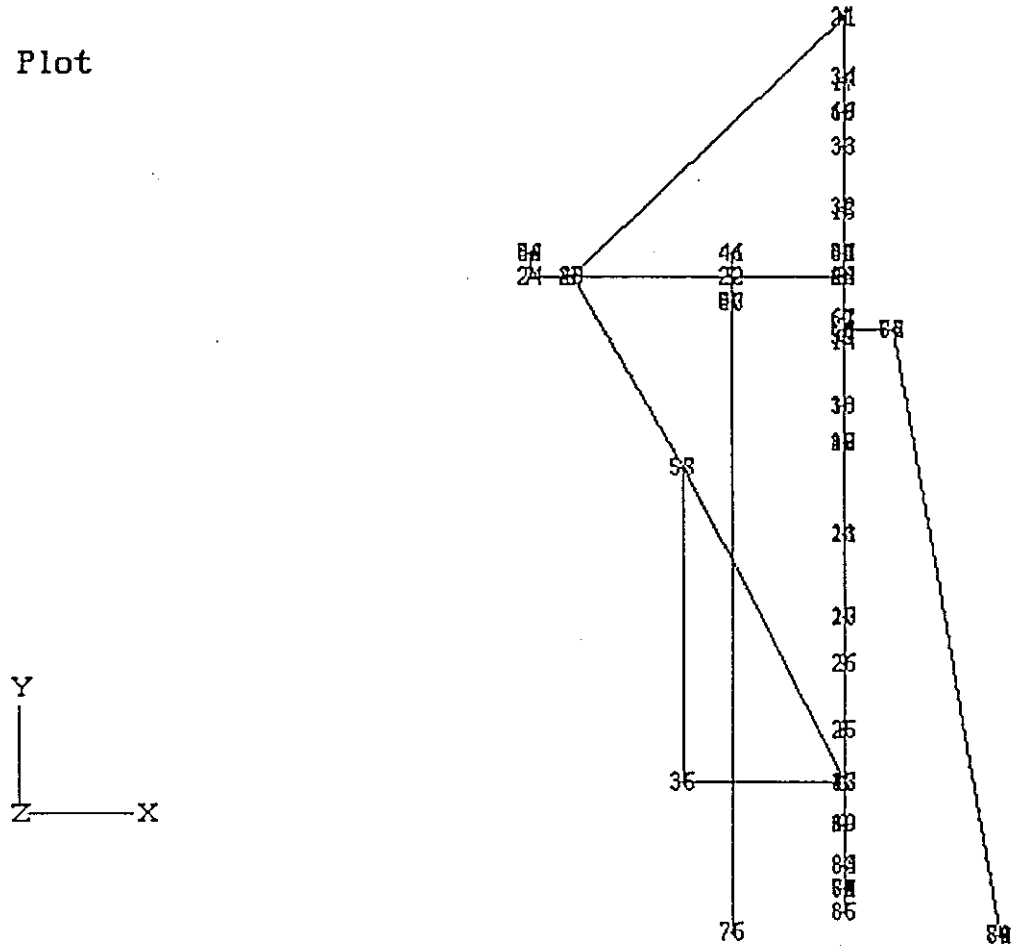

CORE SAMPLER TRUCK NOS.3 & 4 SHIELDED RECEIVER LIFTING FRAME 3/17/95
Wireframe Plot 15:39: 9

A-12

IMAGES-3D
Ver. 3.0
Geometry Plot

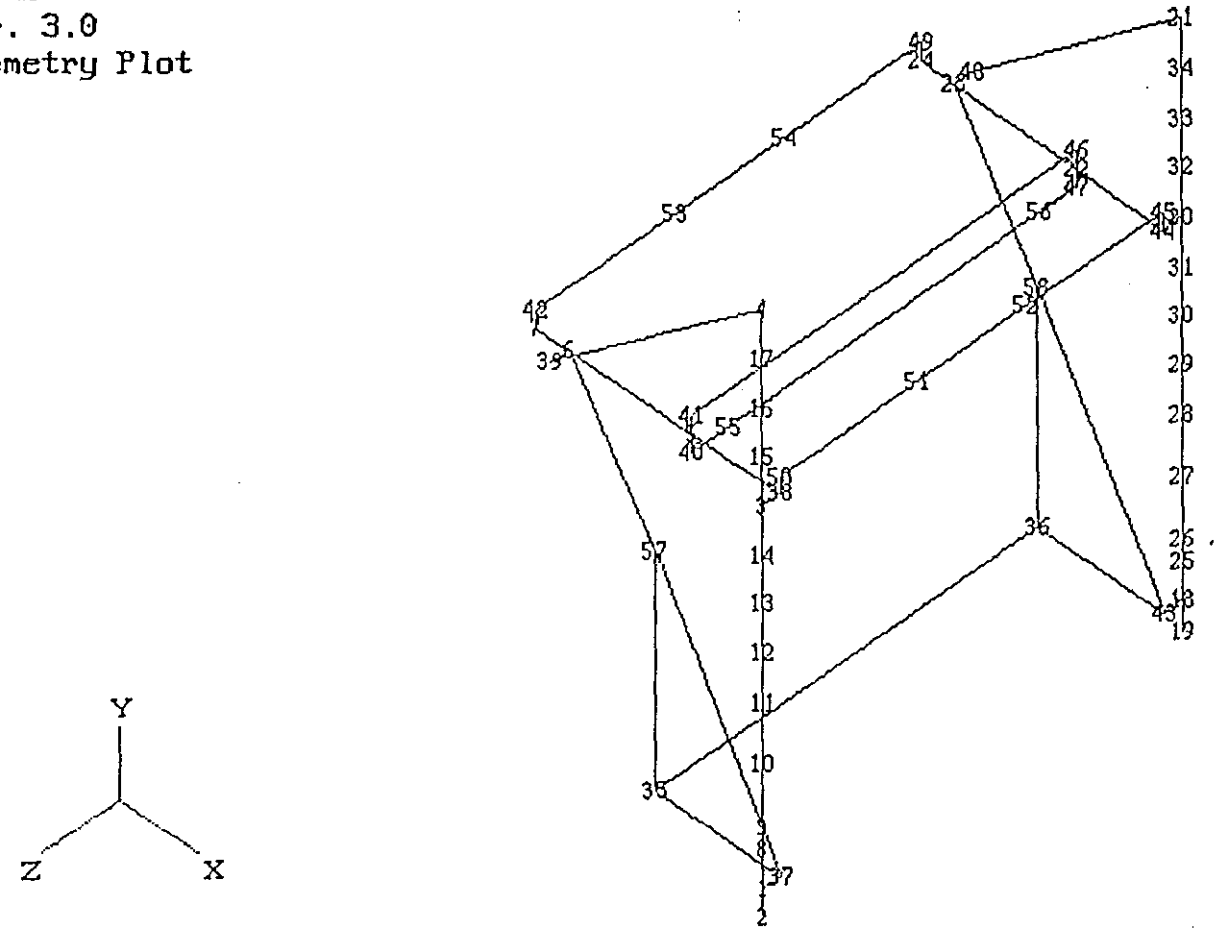

CORE SAMPLER TRUCK NOS.3 & 4 SHIELDED RECEIVER LIFTING FRAME 3/16/95
Wireframe Plot 14:23:48

IMAGES-3D
Ver. 3.0
Geometry Plot

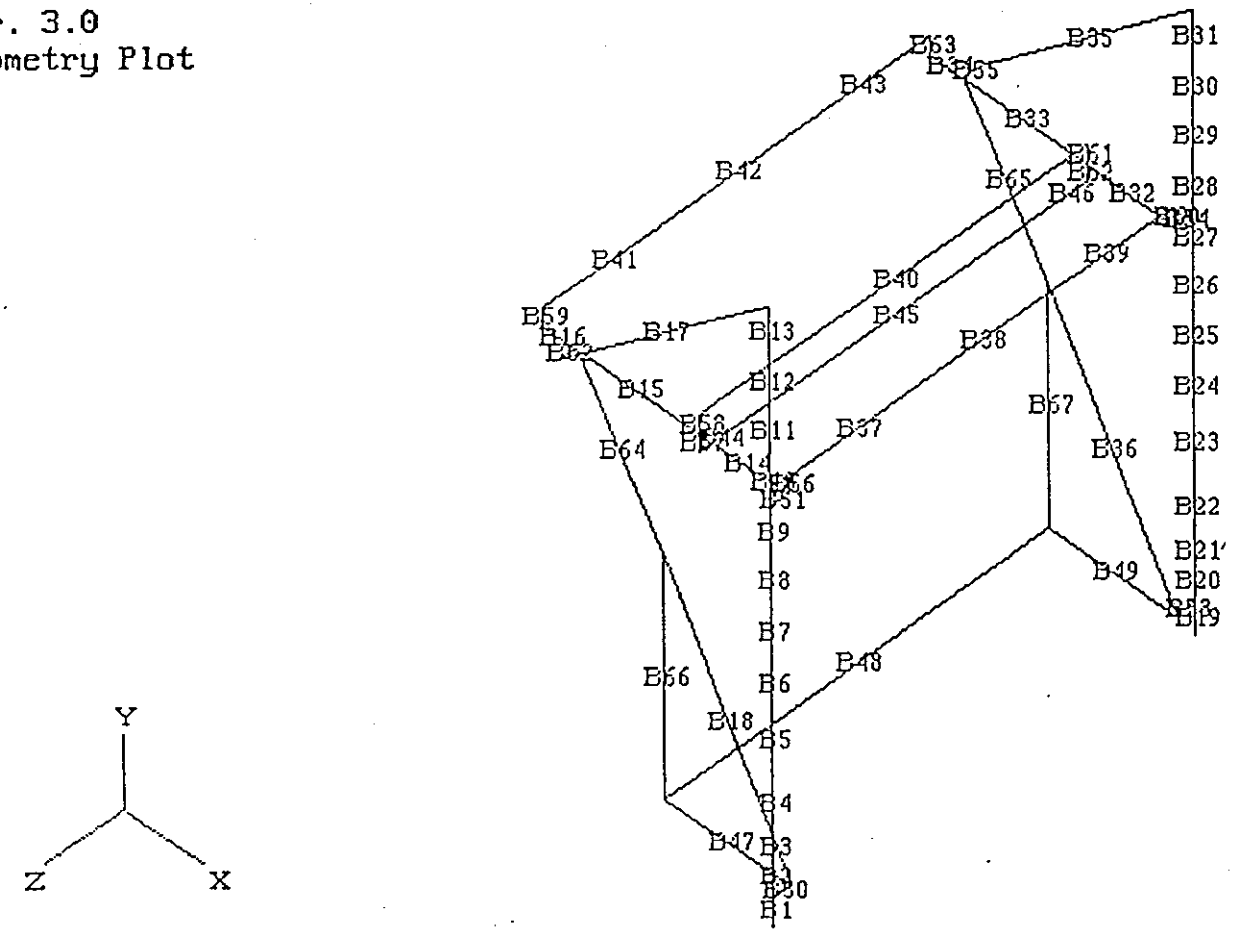

CORE SAMPLER TRUCK NOS.3 & 4 SHIELDED RECEIVER LIFTING FRAME 3/16/95
Wireframe Plot 14:39:15

A-14

IMAGES-3D
Ver. 3.0
Geometry Plot

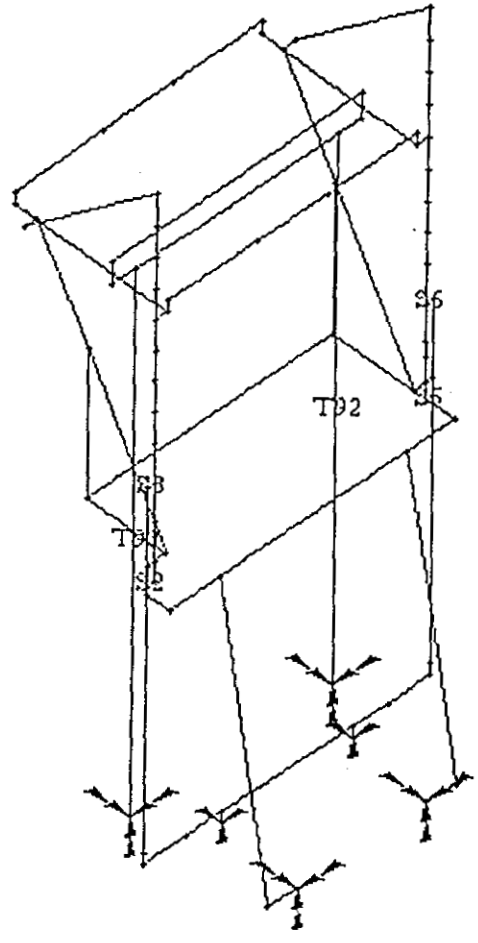

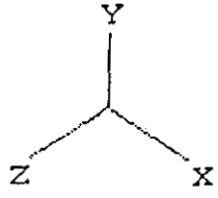

CORE SAMPLER TRUCK NOS.3 & 4 SHIELDED RECEIVER LIFTING FRAME 3/16/95
Wireframe Plot 15:19:59

A-15

IMAGES-3D
Ver. 3.0
Geometry Plot

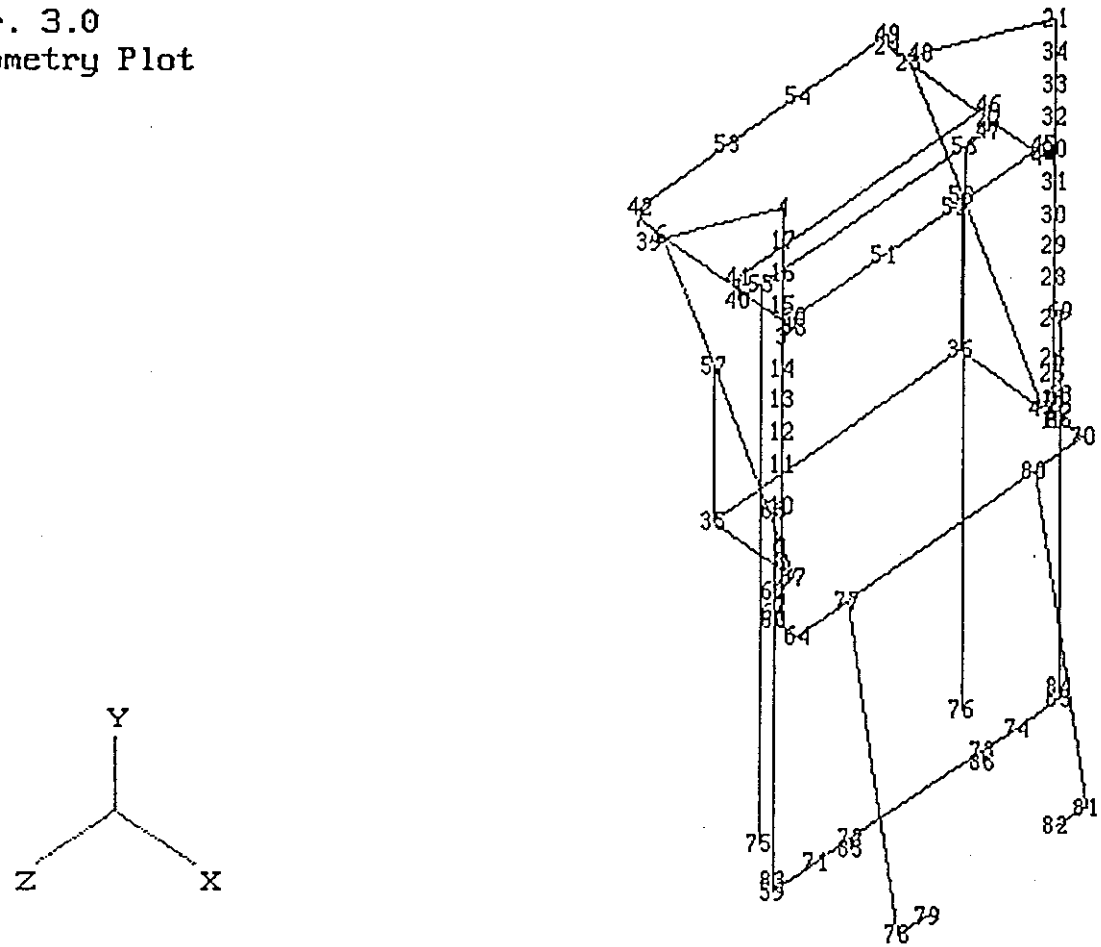

CORE SAMPLER TRUCK NOS.3 & 4 SHIELDED RECEIVER LIFTING FRAME 3/16/95
Wireframe Plot 14:58:40

A-16

IMAGES-3D
Ver. 3.0
Geometry Plot

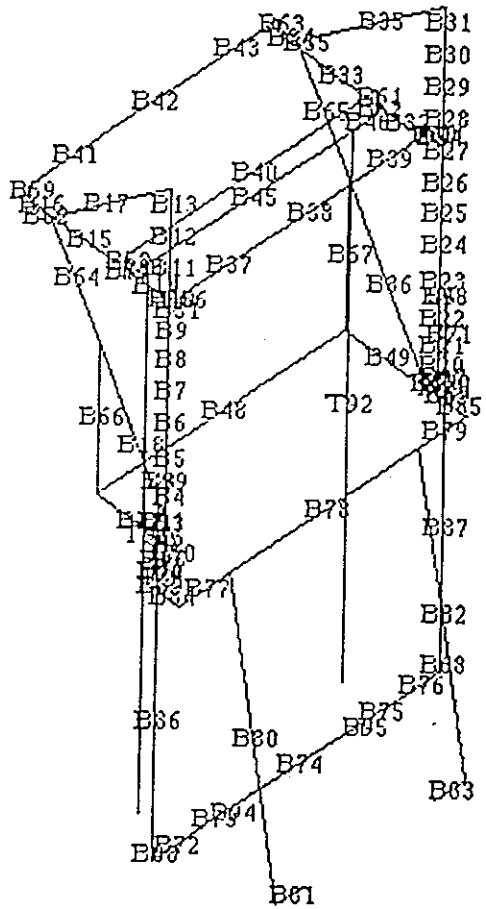

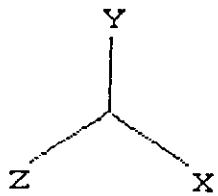

CORE SAMPLER TRUCK NOS.3 & 4 SHIELDED RECEIVER LIFTING FRAME
Wireframe Plot

3/16/95
15: 0:45

A-17

IMAGES-3D
Ver. 3.0
Geometry Plot

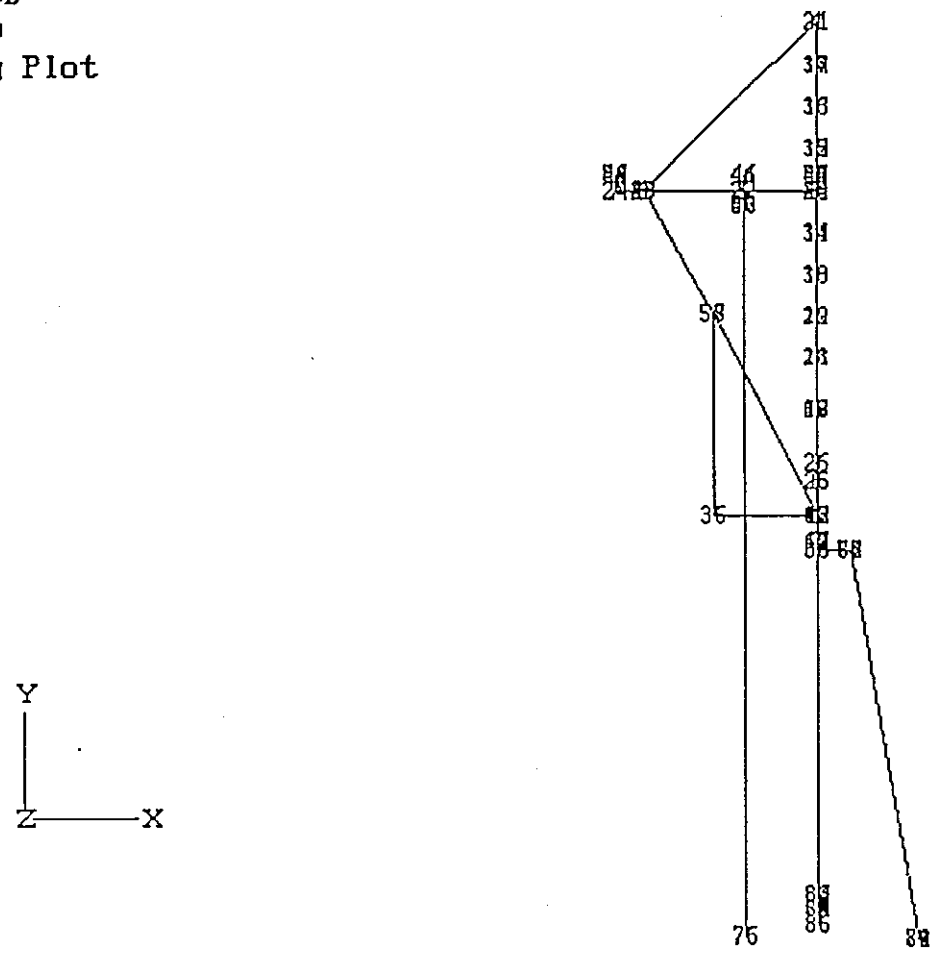

CORE SAMPLER TRUCK NOS.3 & 4 SHIELDED RECEIVER LIFTING FRAME 3/16/95
Wireframe Plot 15: 4:38

A-18

IMAGES-3D
Ver. 3.0
Geometry Plot

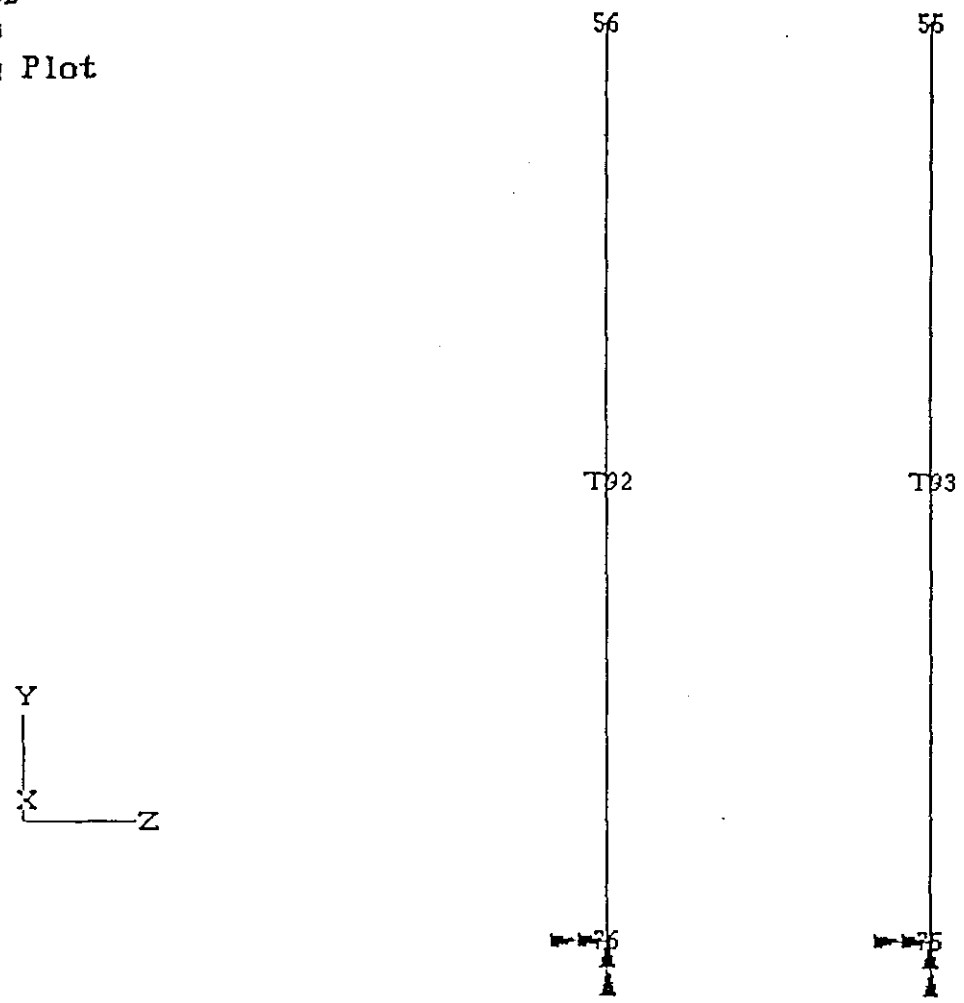

CORE SAMPLER TRUCK NOS.3 & 4 SHIELDED RECEIVER LIFTING FRAME 3/16/95
Wireframe Plot 14:54: 7

A-20

IMAGES-3D
Ver. 3.0
Geometry Plot

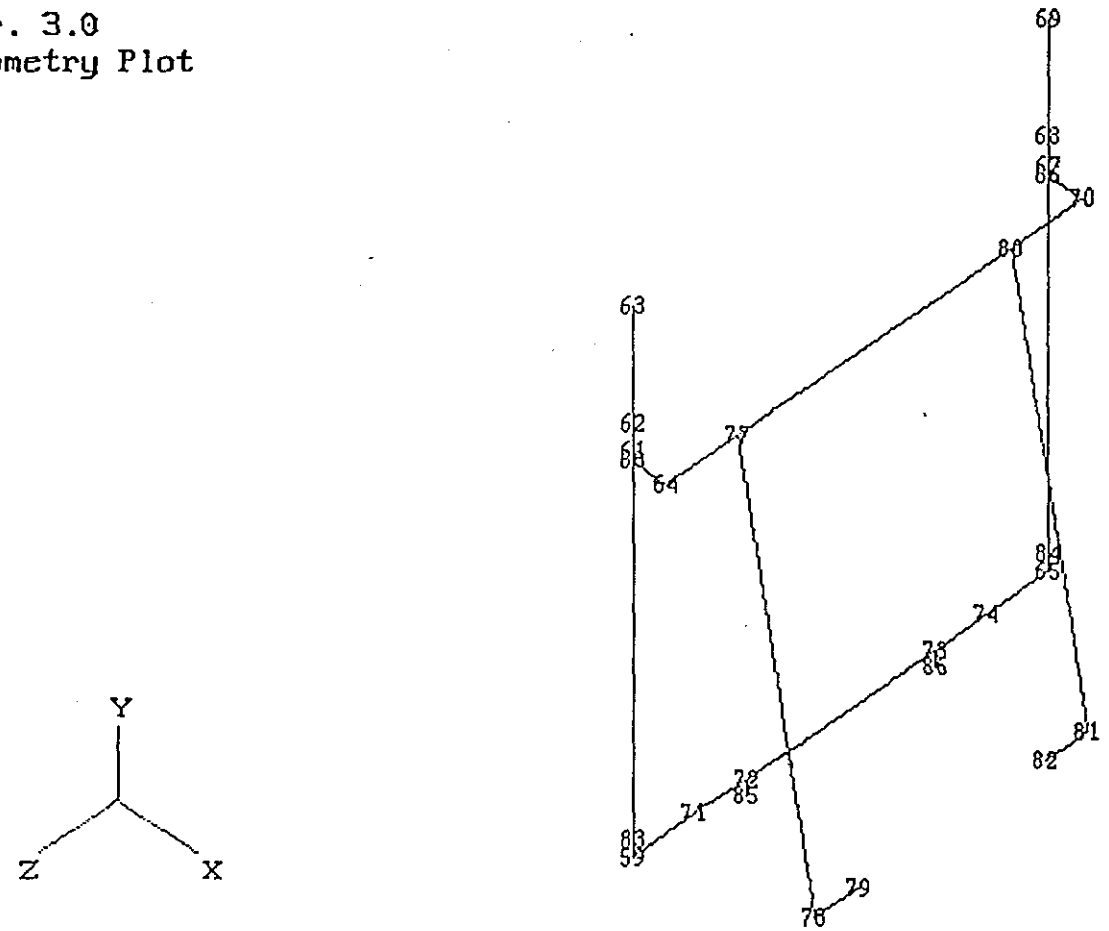

CORE SAMPLER TRUCK NOS.3 & 4 SHIELDED RECEIVER LIFTING FRAME 3/16/95
Wireframe Plot 14:32:38

A-21

IMAGES-3D
Ver. 3.0
Geometry Plot

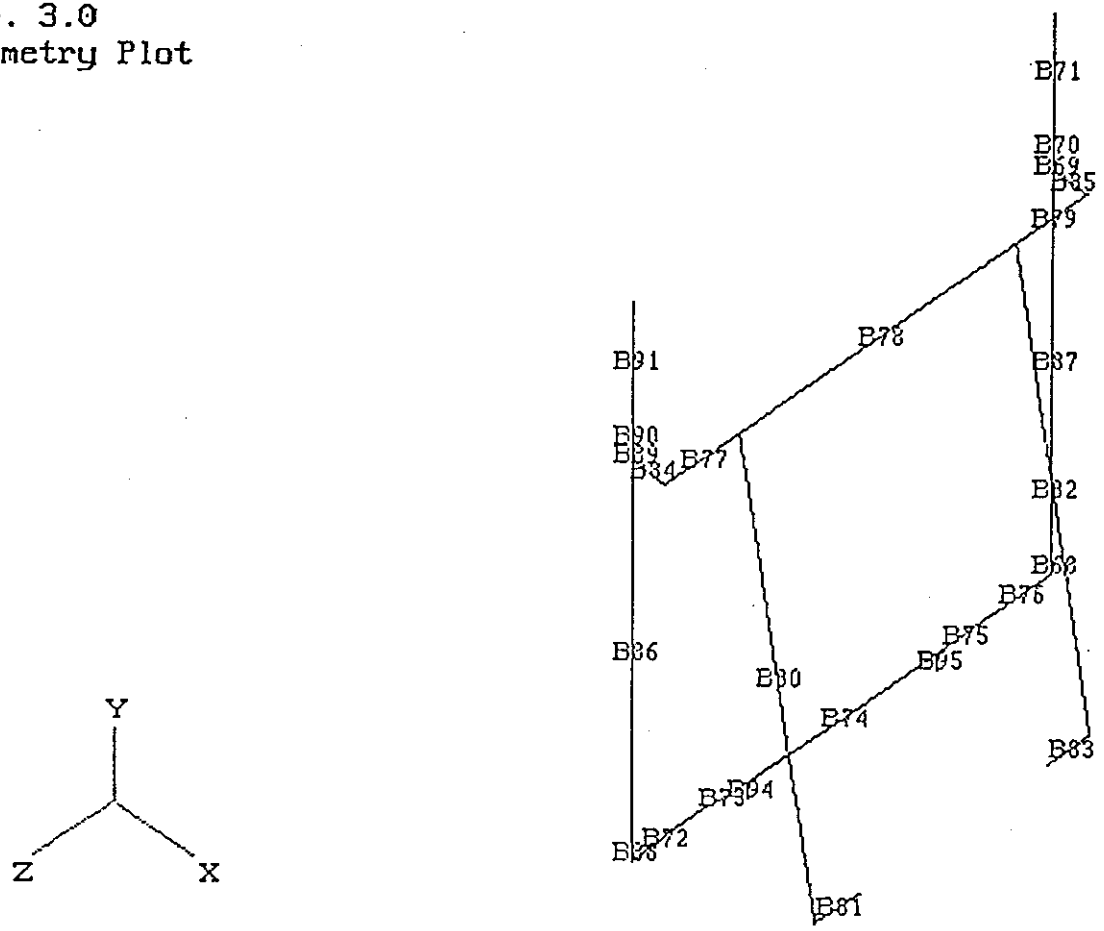

CORE SAMPLER TRUCK NOS.3 & 4 SHIELDED RECEIVER LIFTING FRAME 3/16/95
Wireframe Plot 14:35:58

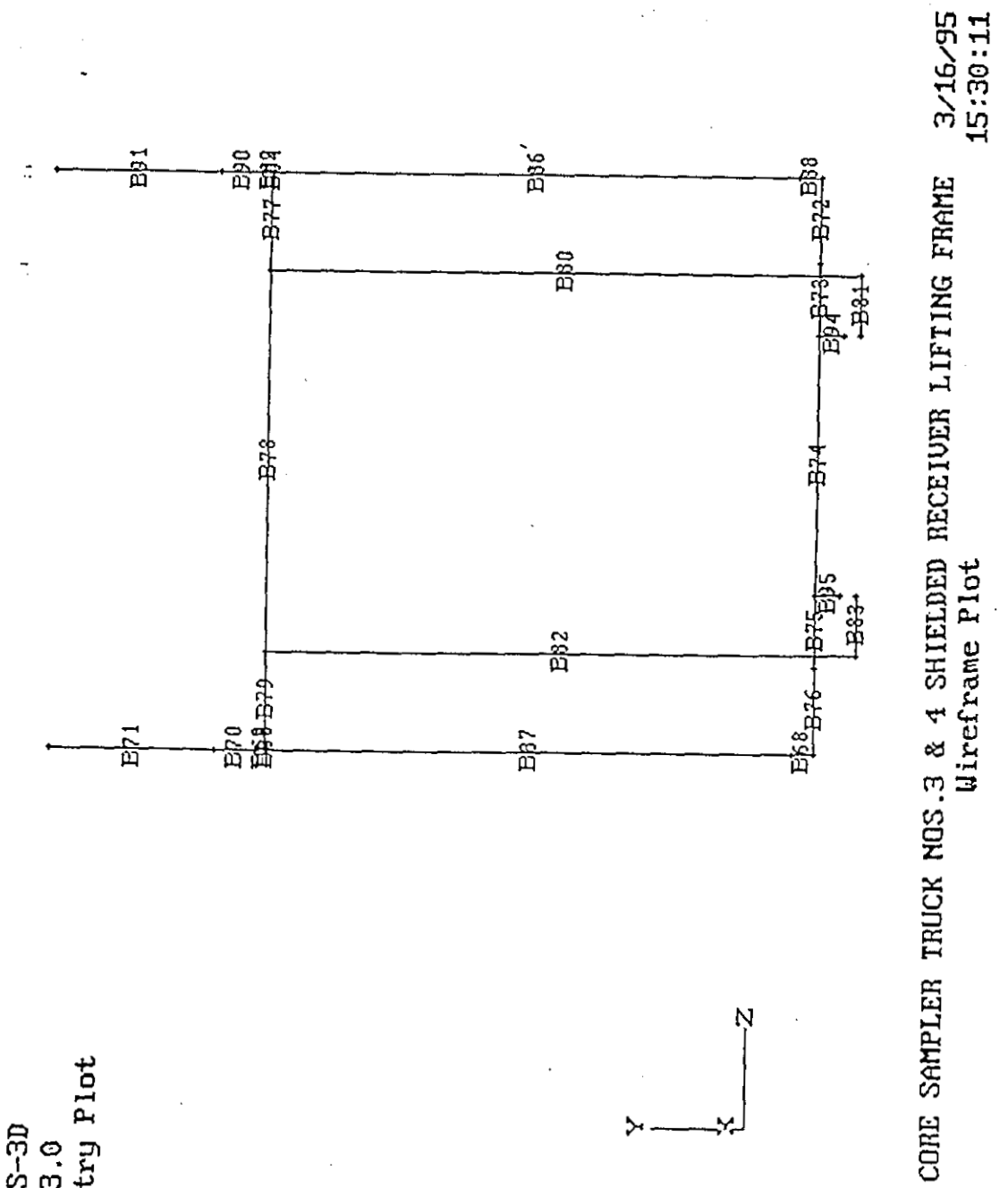
IMAGES-3D
Ver. 3.0
Geometry Plot
CORE SAMPLER TRUCK NOS.3 & 4 SHIELDED RECEIVER LIFTING FRAME
Wireframe Plot
3/16/95
15:30:11
Y
X
Z

A-23

IMAGES-3D
Ver. 3.0
Geometry Plot

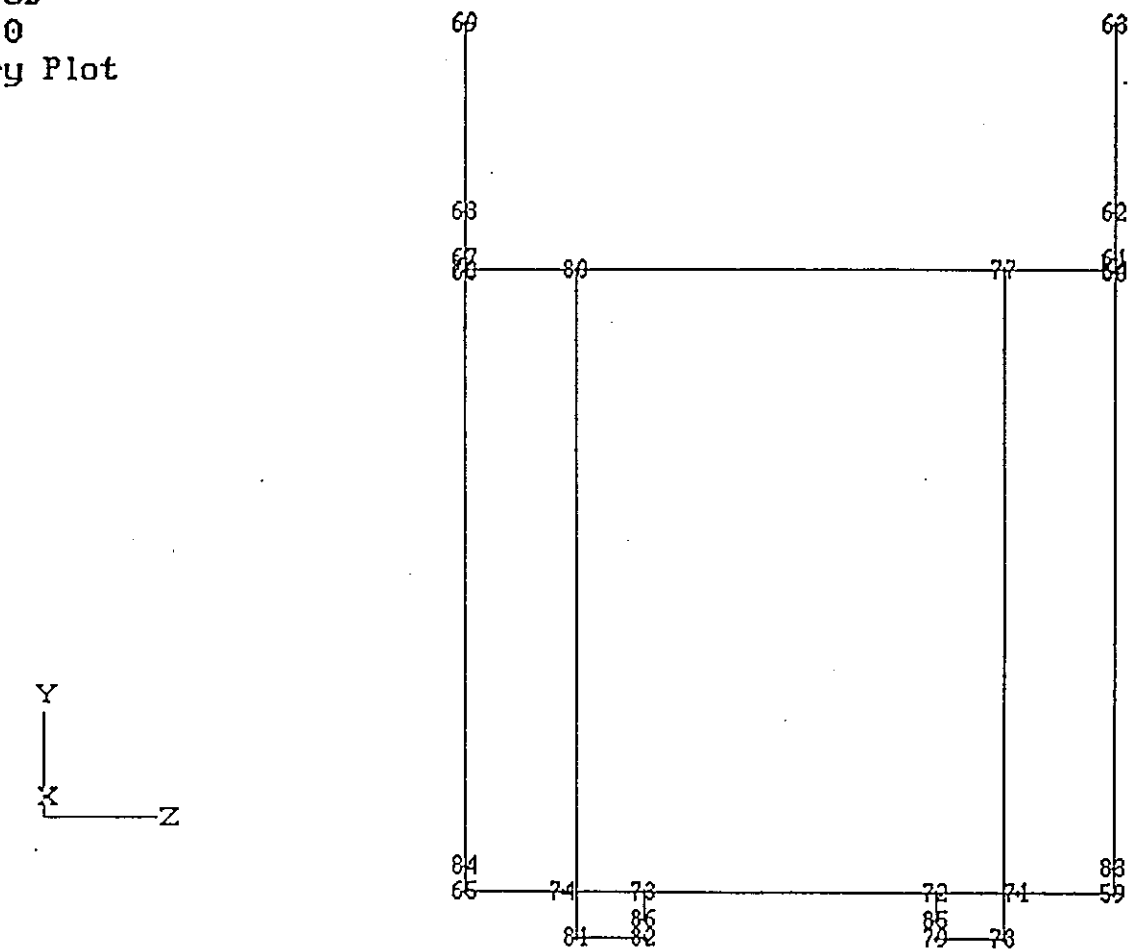

CORE SAMPLER TRUCK NOS.3 & 4 SHIELDED RECEIVER LIFTING FRAME 3/16/95
Wireframe Plot 15:27:48

A-24

DESIGN CALCULATION

(1) Drawing H-2-690044 (2) Doc. No. _____ (3) Page 1 of 5
(4) Building N/A (5) Rev. _____ (6) Job No. _____
(7) Subject TRUCK #3 & 4 SRLF ASSEMBLEY
(8) Originator T Schumacher Date 3-14-95
(9) Checker F.R. Vaughet Date 5/4/95

(10) APPLIED LOADS

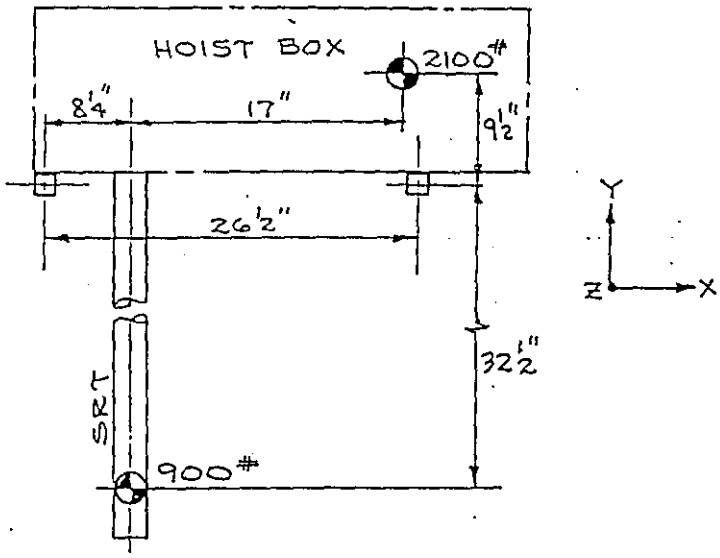

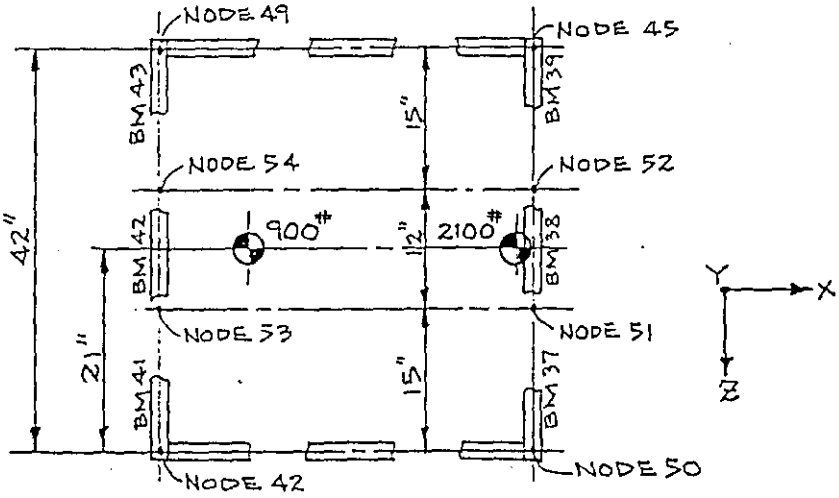

DEADWEIGHT LOADS: (-1G, Y AXIS)

BEAMS 37, 38 & 39 = (8.25×900 + 25.25×2100)/(26.5×42) = 54.31 #/in ⇒ 76%
BEAMS 41, 42 & 43 = (18.25×900 + 1.25×2100)/(26.5×42) = 17.12 #/in ⇒ 24%

A-25

SD-6400-060 1 (12/87)

DESIGN CALCULATION

(1) Drawing H-2-690044 (2) Doc. No. _____ (3) Page 2 of 5
(4) Building N/A (5) Rev. _____ (6) Job No. _____
(7) Subject TRUCK #3 & 4 SRLF ASSEMBLEY
(8) Originator [signature] Date 3-14-95
(9) Checker F.R. VOLLERT Date 5/4/95

(10) APPLIED LOADS (AFT) i.e. $F_x = 1G$ & $F_z = 1G$

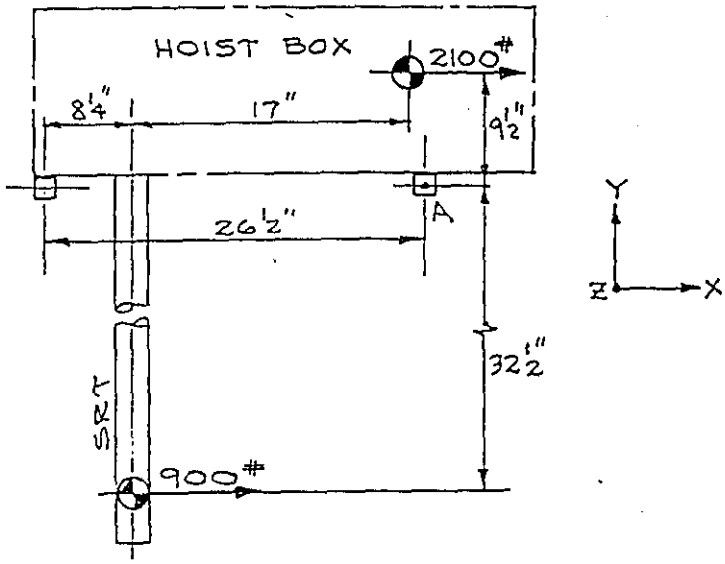

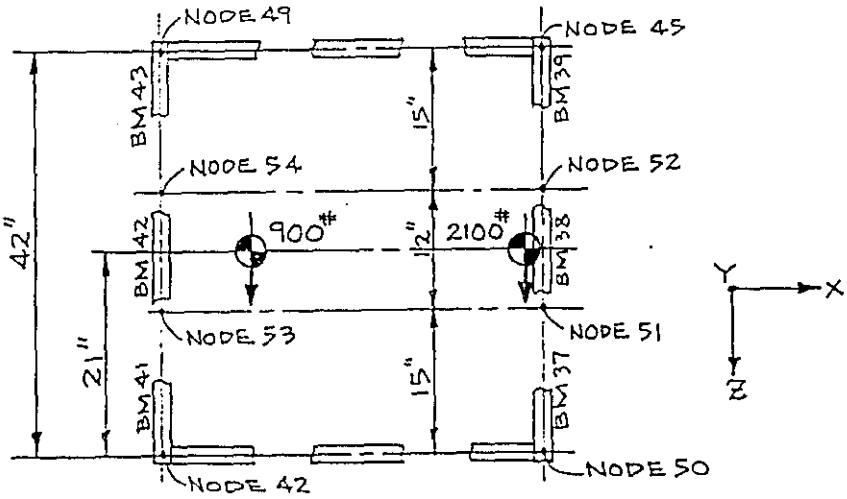

A-26

BD-6400-060 1 (12/87)

DESIGN CALCULATION

(1) Drawing H-2-690044 (2) Doc. No. _____ (3) Page 3 of 5
(4) Building _____ (5) Rev. _____ (6) Job No. _____
(7) Subject TRUCKS NO. 3 & 4
(8) Originator T S Arundel Date 3-14-95
(9) Checker F.R. VOLPERT Date 5/4/95

(10)

LOADS :- AFT (+F_x) & LEFT (+F_z)

TRANSPORTATION LOADS W/FRAME IN DOWN POSITION

DETERMINE LOADS ON OUTER BEAMS (37, 38 & 39, 41, 42 & 43):

DUE TO (+F_x) LOADS (TAKE MOMENTS @ PT. A, P. 2)

$(900 \times 32.5 - 2100 \times 9.5)/26.5 = 351^{\#}$

UPLIFT @ NODE 51 & 52 = $351/2 \cong 176^{\#}$

DOWN LOAD ON BEAMS 41, 42 & 43 = $351/42 = 8.36$ #/in

F_x LOAD @ FOUR ANCHOR POINTS (NODES 51, 52, 53 & 54)

ASSUME SAME PROPORTIONS AS FOR 1G DOWN LOADS

i.e. 76% @ NODES 51 & 52 & 24% @ NODES 53 & 54

∴ F_x @ 51 & 52 = $3000 \times .76/2 = 1140^{\#}$

53 & 54 = $3000 \times .24/2 = 360^{\#}$

DUE TO (+F_z) LOADS

TAKE MOMENTS @ PT. B

$(900 \times 32.5 - 2100 \times 9.5)/18 = 517^{\#}$

UPLIFT @ 51 = $517 \times .76 = 393^{\#}$

53 = $517 \times .24 = 124^{\#}$

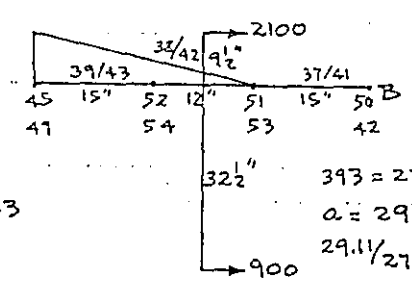

$393 = 27 \times a/2$

$a = 29.11$ #/in

$29.11/27 = 1.1$ #/in/in

$124 = 27 \times b/2$

$b = 9.19$ #/in

$9.19/27 = .34$ #/in/in

DOWN UDL ON BEAMS 38, 39 & 42, 43

BEAM	(NODE) LOAD	TO (NODE) LOAD
38	(51) 0	(52) 12×1.1 = 13.2 #/in
39	(52) 13.2 #/in	(45) 29.11 #/in
42	(53) 0	(54) 12×.34 = 4.1 #/in
43	(54) 4.1 #/in	(45) 9.19 #/in

SHEAR LOADS @ 4 ANCHOR POINTS (F_z)

F_z @ NODE 51, 52 = $1140^{\#}$ & @ 53 & 54 = $360^{\#}$

A-27

BD-6400-060 1 (12/87)

DESIGN CALCULATION

(1) Drawing H-2-690044 (2) Doc. No. _____ (3) Page 4 of 5
(4) Building N/A (5) Rev. _____ (6) Job No. _____
(7) Subject TRUCK #3 & 4 SRLF ASSEMBLEY.
(8) Originator [signature] Date 3-14-95
(9) Checker E.R. VOLKERT Date 5/4/95

(10) APPLIED LOADS (FORWARD) i.e. $F_x = -1G$ & $F_z = 1G$

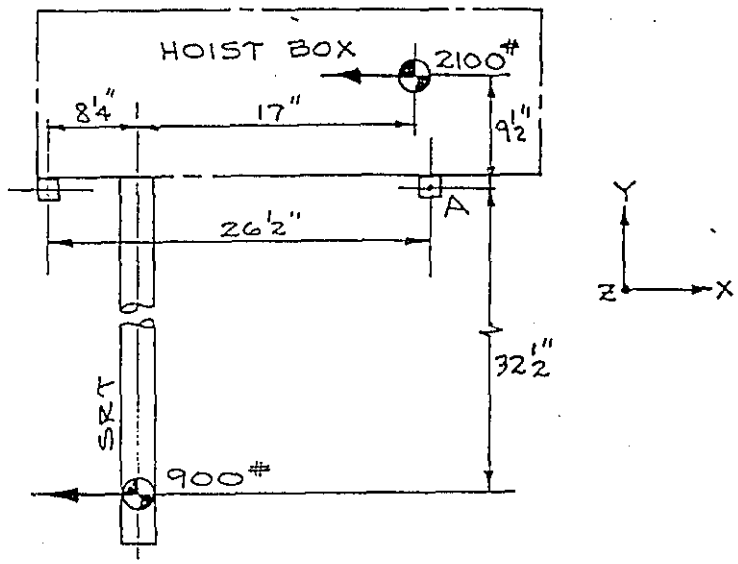

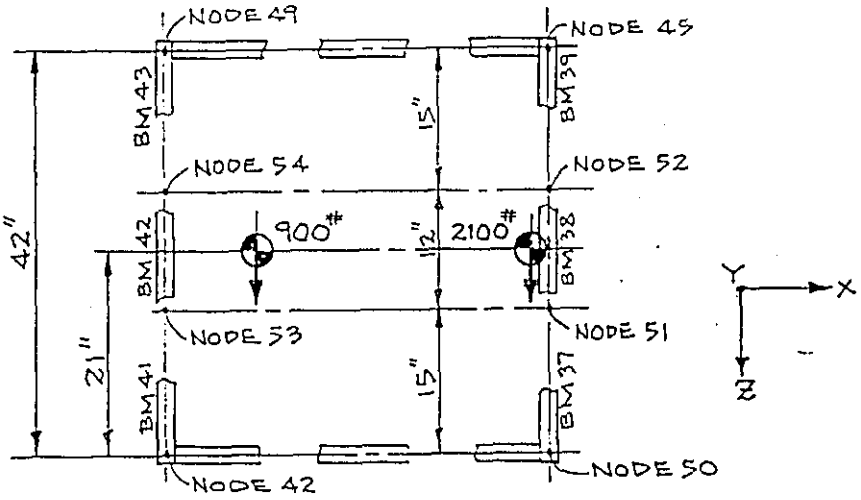

A-28

SD-5400-060 1 (12.87)

DESIGN CALCULATION

(1) Drawing H-2-690044 (2) Doc. No. _____ (3) Page 5 of 5
(4) Building _____ (5) Rev. _____ (6) Job No. _____
(7) Subject TRUCKS NO. 3 & 4
(8) Originator T Schumdal Date 3-14-95
(9) Checker F.R. VOLLERT Date 5/4/95

(10)

LOADS: FORWARD ($-F_x$) & LEFT ($+F_z$)

TRANSPORTATION LOADS W/FRAME IN DOWN POSITION

DETERMINE LOADS ON OUTER BEAMS (37, 38, 39 & 41, 42, 43)

DUE TO ($-F_x$) LOADS (SEE P. 3)

SINCE F_x IS REVERSED

∴ UPLIFT @ NODE 53 & 54 = 176 #

DOWN UDL ON BEAMS 37, 38 & 39 = 8.36 #/in

SHEAR (F_x) @ 4 ANCHOR POINTS (NODES 51, 52, 53 & 54)

F_x @ 51, 52 = −1140 #
53, 54 = −360 #

DUE TO ($+F_x$) LOADS

SAME LOADING AS FOR AFT & LEFT (SEE p. 3)

UPLIFT @ 51 = 393 #
53 = 124 #

DOWN UDL ON BEAMS 38, 39, 42 & 43

BEAM	(NODE) LOAD	TO	(NODE) LOAD
38	(51) 0		(52) 13.2 #/in
39	(52) 13.2		(45) 29.11 #/in
42	(53) 0		(54) 4.1 #/in
43	(54) 4.1		(49) 9.19 #/in

SHEARLOADS @ 4 ANCHOR POINTS

F_z @ 51, 52 = 1140 #
53, 54 = 360 #

A-29

BD-6400-060 1 (12/87)

APPENDIX B

STRESS ANALYSES, WELDED JOINTS, SHIELDED RECEIVER LIFTING FRAME, CORE SAMPLER TRUCKS #3 AND #4

ANALYTICAL CALCULATIONS

Page 1 of 02

Subject SRLF STRUCTURAL ANALYSES, TRUCKS 3 → 4

Originator F.R. VOLLERT Date 5/3/95

Checker Harry H. Zeh Date 6-30-95

COMPUTER RUN ID NUMBERS

IMAGES 3D, VERSION 3.0

DEADWEIGHT ANALYSES

LIFT FRAME POSITION	M_z FOR NODES 85, 86	RUN ID NUMBER
UP	RESTRAINED	CM83195
DOWN	RESTRAINED	KØ18365
UP	FREE	EU43418
DOWN	FREE	PY79828

TRANSPORTATION ANALYSES

LONGITUDINAL LOAD DIRECTION	M_z FOR NODES 85, 86	RUN ID NUMBER
FORWARD	RESTRAINED	IB 33923
AFT	RESTRAINED	YE 49602
FORWARD	FREE	GT 73150
AFT	FREE	HK 76347

THE MEMBER FORCES AND STRESSES, AND WELD JOINT FORCES FOR THE SRLF WERE COMPUTED BY THESE ANALYSES.

B-2

BD-8400-060.1 (07/93)

DESIGN CALCULATION

(1) Drawing H-2-690044 (2) Doc. No. _____ (3) Page 2 of 62
(4) Building N/A (5) Rev. _____ (6) Job No. _____
(7) Subject Core Sampler Truck Nos. 3 & 4 Shielded Receiver Lifting Frame Assembly
(8) Originator F.R. Vollert Date 4/5/95
(9) Checker Hassan H. Zaidi Date 6-30-95

DEAD WEIGHT ANALYSIS
(Ref. Drawings H-2-690043 and 690044 Sh. 1 & 2)

WELD JOINT FORCES: GLOBAL COORDINATES

MEMBERS 3 AND 3 TO 5 Frame LIFTING

JOINT SKETCH:

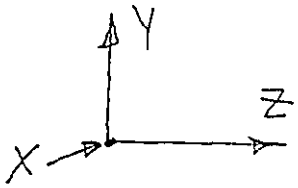

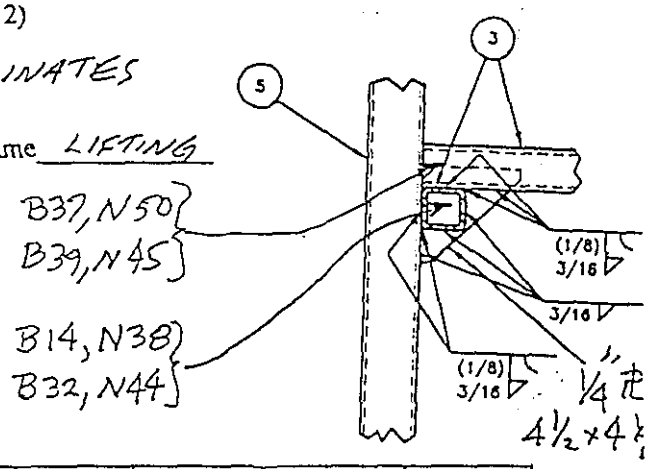

With Mz Restrained at Nodes 85 and 86

Moveable Frame Position	Beam and Node Numbers	Fx lbs	Fy lbs	Fz lbs	Mx in-lbs	My in-lbs	Mz in-lbs
UP	B37, N50	0	1150	203	7065	223	1
	B39, N45	0	1150	203	7063	225	1
	B14, N38	211	1091	112	1688	146	5506
	B32, N44	211	1092	112	1688	146	5507
DOWN	B37, N50	0	1150	252	7136	146	1
	B39, N45	0	1150	252	7134	147	1
	B14, N38	19	1119	156	1597	525	5872
	B32, N44	18	1119	156	1597	524	5872

Without Mz Restrained at Nodes 85 and 86

Moveable Frame Position	Beam and Node Numbers	Fx lbs	Fy lbs	Fz lbs	Mx in-lbs	My in-lbs	Mz in-lbs
UP	B37, N50	0	1150	198	7055	232	1
	B39, N45	0	1150	198	7052	233	1
	B14, N38	212	1091	108	1703	110	5504
	B32, N44	212	1092	109	1703	110	5505
DOWN	B37, N50	0	1150	255	7141	142	1
	B39, N45	0	1150	255	7139	143	1
	B14, N38	19	1119	158	1590	343	5873
	B32, N44	19	1119	158	1589	542	5873

B-3

DESIGN CALCULATION

(1) Drawing H-2-690044 (2) Doc. No. _____ (3) Page 3 of 62
(4) Building N/A (5) Rev. _____ (6) Job No. _____
(7) Subject Core Sampler Truck Nos. 3 & 4 Shielded Receiver Lifting Frame Assembly
(8) Originator E. R. VOGLERT Date 4/5/95
(9) Checker Hassan H. Tinh Date 6-30-95

TRANSPORT LOADS ANALYSIS
(Ref. Drawings H-2-690043 and 690044 Sh. 1 & 2)

WELD JOINT FORCES: (Moveable Frame in Down Position)

MEMBERS (3) AND (3) TO (5) Frame LIFTING

JOINT SKETCH: GLOBAL COORDINATES

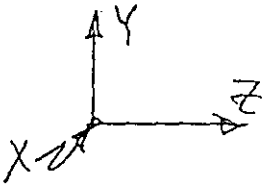

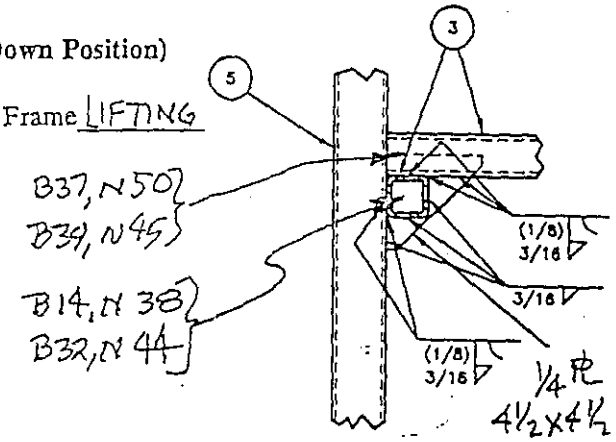

With Mz Restrained at Nodes 85 and 86

Longitudinal Load Direction	Beam and Node Numbers	Fx lbs	Fy lbs	Fz lbs	Mx in-lbs	My in-lbs	Mz in-lbs
FORWARD	B37, N50	484	1516	1728	12050	3950	223
	B39, N45	503	1350	878	5434	4329	223
	B14, N38	10	1556	590	115	4557	8029
	B32, N44	286	1109	783	2877	5318	6346
AFT	B37, N50	504	1443	491	12750	4334	183
	B39, N45	485	1121	360	3349	3937	183
	B14, N38	281	1562	466	957	3730	7567
	B32, N44	34	1021	284	2976	3005	5456

Without Mz Restrained at Nodes 85 and 86

Longitudinal Load Direction	Beam and Node Numbers	Fx lbs	Fy lbs	Fz lbs	Mx in-lbs	My in-lbs	Mz in-lbs
FORWARD	B37, N50	489	1537	2057	12280	4062	249
	B39, N45	500	1330	1207	5305	4300	249
	B14, N38	31	1570	574	204	4361	8067
	B32, N44	308	1101	798	3336	5374	6367
AFT	B37, N50	502	1441	491	12710	4299	209
	B39, N45	486	1123	360	3395	3971	209
	B14, N38	289	1566	466	960	3740	7564
	B32, N44	40	1017	285	2979	3000	5461

B-4

ANALYTICAL CALCULATIONS

Page 4 of 62

Subject SRLF WELD JOINT STRESS ANALYSES, TRUCKS 3 + 4

Originator E.R. VOLLERT Date 4/19/95

Checker Hassan H. Zaida Date 6-30-95

MEMBERS (3) AND (3) TO (5)

JOINT SKETCH:

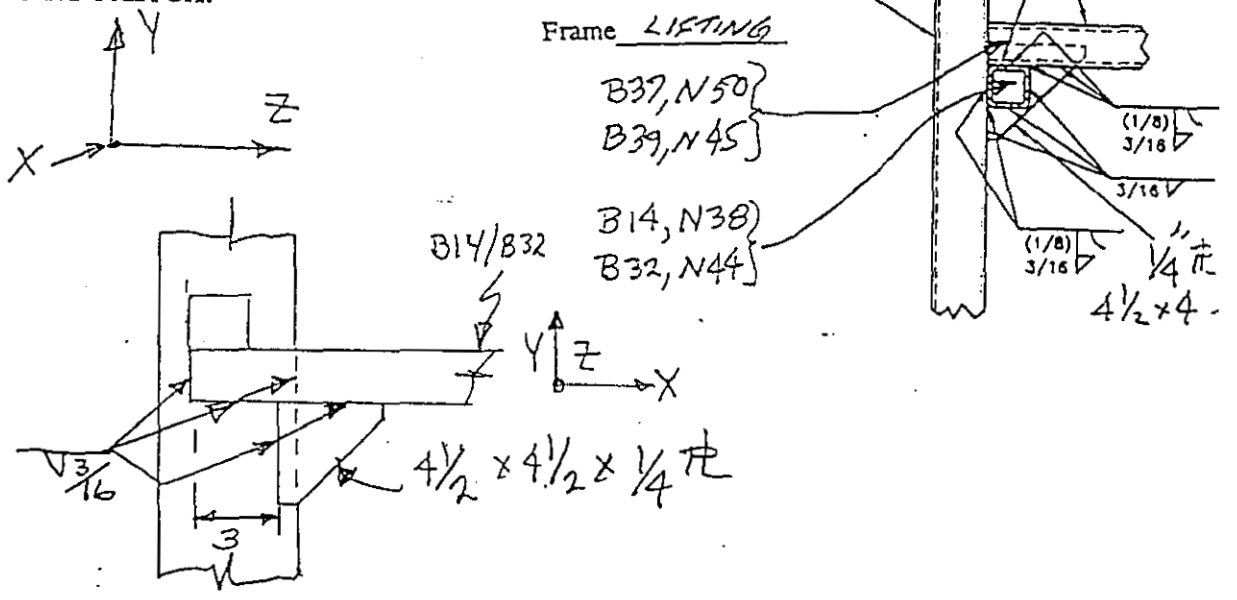

GUSSET PL RESISTS M_z IN B14/B32

$S_z = \frac{4.5^2}{6} = 3.38 \text{ IN}^2$ (WELD ONE SIDE ONLY)

(FOR DEADWEIGHT:) $(M_z)_{MAX} = 5873$ IN LB

$F_W = \frac{5873}{3.38} = 1738$ LB/IN < 2775 ALLOWABLE

(FOR TRANSPORTATION:) $(M_z)_{MAX} = 8067$ IN LB

$F_W = \frac{8067}{3.38} = 2387$ LB/IN < 2775 ALLOWABLE

B-5

BD-6400-060.1 (07/93)

ANALYTICAL CALCULATIONS

Subject SRLF WELD JOINT STRESS ANALYSES, TRUCKS 3+4
Originator E.R. VOLLERT Date 4/19/95
Checker Hassan H. Zirk Date 6-30-95

WELD B14/B32 TO (5)

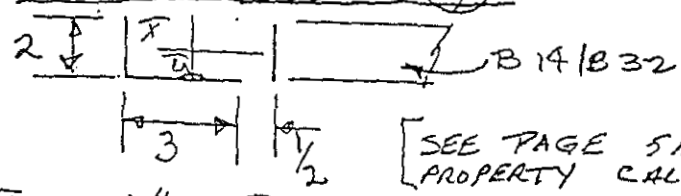

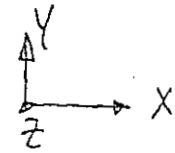

[SEE PAGE 5A FOR SECTION PROPERTY CALCS, THIS WELD]

$\bar{x} = 1.64''$, $\bar{y} = 0.57''$, $S_x = 2.13\ IN^2$, $S_y = 7.85\ IN^2$

WELD STRESS $F_W = \frac{M_x}{S_x} + \frac{M_y}{S_y}$

(FOR DEADWEIGHT:)

$F_W = \frac{1703}{2.13} + \frac{110}{7.85} = 814\ LB/IN < 2775\ LB/IN$ ALLOWED

(FOR TRANSPORTATION:)

$F_W = \frac{3336}{2.13} + \frac{5374}{7.85} = 2251\ LB/IN < 2775\ LB/IN$ ALLOWED

B37/B39 TO (5) WELDS

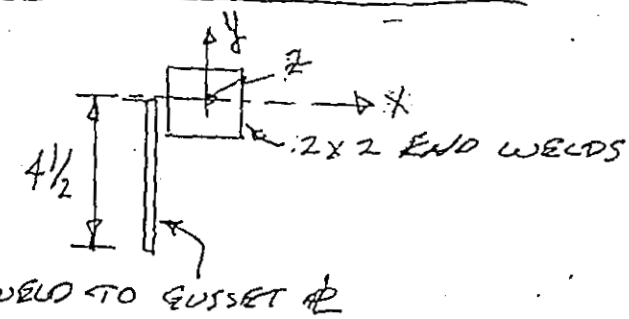

(M_x + M_y ARE ONLY SIGNIFICANT FORCES ON WELD)

LET $S_y = 5.33\ IN^2$ (NEGLECT GUSSET PL)

$\bar{y} = \frac{8 \times 1 + 4.5 \times 3.25}{12.5} = 1.81\ IN$

$I_x = 5.33 + \frac{4.5^3}{12} + 4.5(1.44)^2 + 8 \times 0.81^2 = 27.50\ IN^3$

$S_x = 27.50/3.69 = 7.45$

BD-6400-060.1 (07/93)

ANALYTICAL CALCULATIONS

Page 5A of 62

Subject SRLF WELD JOINT STRESS ANALYSES, TRUCKS 3 AND 4

Originator F.R. VOLLERT Date 6/30/95

Checker Harry H. Zinke Date 7-5-95

SECTION PROPERTIES, WELD B14/B31 TO 5 (CHANNEL)
(REF SKETCH, P4 5)

$$\bar{X} = \frac{2 \times 3.5 + 3 \times 1.5 + 2 \times 0}{7} = 1.64 \text{ IN}$$

$$\bar{y} = \frac{2 \times 2 \times 1 + 3 \times 0}{7} = 0.57 \text{ IN}$$

$$I_x = \frac{2 \times 2^3}{12} + 2 \times 2 \times 0.43^2 + 3 \times 0.57^2 = 3.05 \text{ IN}^3$$

$$S_x = \frac{I_x}{2-0.57} = \frac{3.05}{1.43} = 2.13 \text{ IN}^2$$

$$I_y = \frac{3^3}{12} + 3 \times 0.14^2 + 2 \times 1.64^2 + 2 \times 1.86^2 = 14.61 \text{ IN}^3$$

$$S_y = \frac{I_y}{1.86} = 7.85 \text{ IN}^2$$

B-7

BD-6400-060.1 (07/93)

ANALYTICAL CALCULATIONS

Page 6 of 62

Subject SRLF WELD JOINT STRESS ANALYSES, TRUCKS 3+4

Originator F.R. Vaught Date 4/10/95

Checker Hussam H. Zurub Date 6-30-95

B31/B39 TO ③ WELDS CONTINUED

(WELD STRESSES)

$\therefore \quad F_w = \frac{M_x}{S_x} + \frac{M_y}{S_y}$

(FOR DEAD WEIGHT:)

$F_w = \frac{7065}{7.45} + \frac{223}{5.33} = 990 \text{ LB/IN} < 2775 \text{ LB/IN}$ ALLOWABLE

(FOR TRANSPORTATION:)

$F_w = \frac{12760}{7.45} + \frac{4334}{5.33} = 2525 \text{ LB/IN} < 2775 \text{ LB/IN}$ ALLOWABLE

GUSSET PL STRESSES

1/4" PL SUPPORTING B14/B32

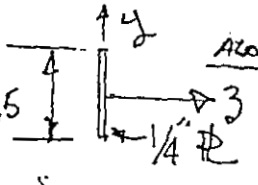

ALONE RESISTS M_3 FROM B14/B32

$S_3 = \frac{4.5^2}{6} \times 0.25 = 0.84 \text{ IN}^3$

$\therefore$ BENDING STRESS $= f_b = \frac{M_3}{S_3}$

(DEADWEIGHT)

$f_b = \frac{5873}{0.84} = 6992 \text{ PSI}$ OK

(TRANSPORTATION)

$f_b = \frac{8067}{0.84} = 9604 \text{ PSI}$ OK

BD-6400-060.1 (07/93)

ANALYTICAL CALCULATIONS

Page 7 of 62

Subject SRLF WELD JOINT STRESS ANALYSES TRUCKS 3 & 1
Originator F.R. VOLLERT Date 5/1/95
Checker Hans H. Zeib Date 6-30-95

③ AND ③ TO ⑤ CONTINUED

GUSSET ℄ STRESSES CONTINUED

1/4 ℄ SUPPORTING B37/B39 WITH 2x2x1/4 TUBE RESISTS Mx AND My FROM B39/B39

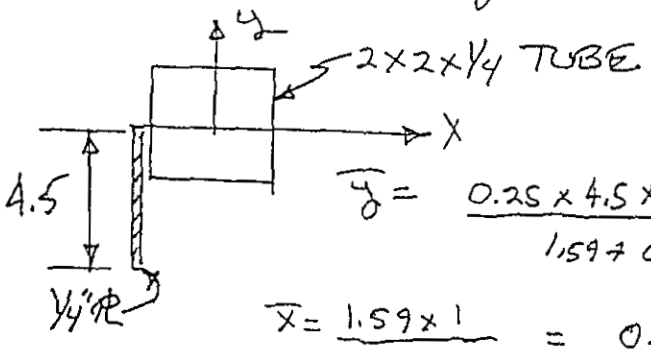

$$\bar{y} = \frac{0.25 \times 4.5 \times 3.25 + 1.59 \times 1}{1.59 + 0.25 \times 4.5} = 1.93 IN$$

$$\bar{x} = \frac{1.59 \times 1}{1.59 + 0.25 \times 4.5} = 0.59 IN$$

$$I_x = 0.766 + 0.766 \times 0.93^2 + \frac{0.25 \times 4.5^3}{12} + 4.5 \times 0.25 \times 1.32^2$$

$$I_x = 5.28 IN^4$$

$$I_y = 7.66 + 1.59 \times 0.41^2 + 0.25 \times 4.5 \times 0.59^2 = 1.42 IN^4$$

FOR MAX GUSSET ℄ BENDING STRESS:

$$S_y = \frac{I_y}{0.59} = \frac{1.42}{0.59} = 2.41 IN^3$$

$$S_x = \frac{I_x}{3.57} = \frac{5.28}{3.57} = 1.48 IN^3$$

BENDING STRESS $f_b = \frac{M_x}{S_x} + \frac{M_y}{S_y}$

(DEADWEIGHT)

$$f_b = \frac{7065}{1.48} + \frac{223}{2.41} = 4866 PSI \quad OK$$

(TRANSPORTATION)

$$f_b = \frac{12750}{1.48} + \frac{4334}{2.41} = 10413 PSI \quad OK$$

$F_b = 23760$ PSI ALLOWABLE

B-9

BD-6400-060.1 (07/93)

DESIGN CALCULATION

(1) Drawing H-2-690044 (2) Doc. No. _____ (3) Page 8 of 62
(4) Building N/A (5) Rev. _____ (6) Job No. _____
(7) Subject Core Sampler Truck Nos. 3 & 4 Shielded Receiver Lifting Frame Assembly
(8) Originator F. R. Valert Date 4/3/95
(9) Checker Hamid Zaik Date 6-30-95

DEAD WEIGHT ANALYSIS
(Ref. Drawings H-2-690043 and 690044 Sh. 1 & 2)

WELD JOINT FORCES: GLOBAL COORDINATES

MEMBERS (4) ACTUATOR BM TO (3) Frame LIFTING

JOINT SKETCH:

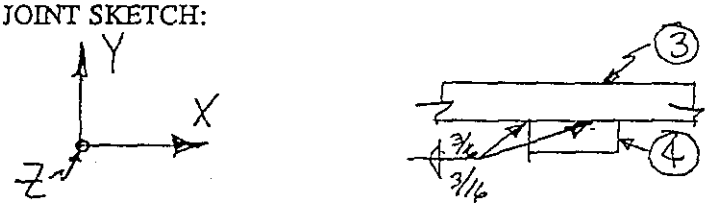

B44, N40
B46, N47

With Mz Restrained at Nodes 85 and 86

Moveable Frame Position	Beam and Node Numbers	Fx lbs	Fy lbs	Fz lbs	Mx in-lbs	My in-lbs	Mz in-lbs
UP	B44, N40	0	1653	631	5653	299	2
	B46, N47	0	1653	631	5653	299	2
DOWN	B44, N40	0	1653	646	5633	300	1
	B46, N47	0	1653	646	5633	301	1

Without Mz Restrained at Nodes 85 and 86

Moveable Frame Position	Beam and Node Numbers	Fx lbs	Fy lbs	Fz lbs	Mx in-lbs	My in-lbs	Mz in-lbs
UP	B44, N40	0	1653	629	5655	300	2
	B46, N47	0	1653	629	5655	300	2
DOWN	B44, N40	0	1653	647	5633	300	1
	B46, N47	0	1653	647	5633	300	1

B-10

DESIGN CALCULATION

(1) Drawing H-2-690044 (2) Doc. No. _____ (3) Page 9 of 62
(4) Building N/A (5) Rev. _____ (6) Job No. _____
(7) Subject Core Sampler Truck Nos. 3 & 4 Shielded Receiver Lifting Frame Assembly
(8) Originator F.R. VAUGHT Date 4/6/95
(9) Checker Hasan H. Zaidi Date 5-30-95

TRANSPORT LOADS ANALYSIS
(Ref. Drawings H-2-690043 and 690044 Sh. 1 & 2)

WELD JOINT FORCES: **(Moveable Frame in Down Position)**

MEMBERS (4) ACTUATOR BM TO (3) Frame LIFTING

JOINT SKETCH: GLOBAL COORDINATES

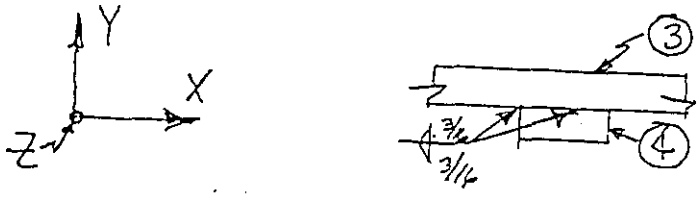

B44, N40
B46, N47

With Mz Restrained at Nodes 85 and 86

Longitudinal Load Direction	Beam and Node Numbers	Fx lbs	Fy lbs	Fz lbs	Mx in-lbs	My in-lbs	Mz in-lbs
FORWARD	B44, N40	59	2319	682	5616	496	457
	B46, N47	77	1584	666	7538	2355	457
AFT	B44, N40	72	2445	1245	5267	1983	331
	B46, N47	54	1458	1229	7911	674	331

Without Mz Restrained at Nodes 85 and 86

Longitudinal Load Direction	Beam and Node Numbers	Fx lbs	Fy lbs	Fz lbs	Mx in-lbs	My in-lbs	Mz in-lbs
FORWARD	B44, N40	62	2343	605	5534	494	493
	B46, N47	80	1560	589	7686	2485	493
AFT	B44, N40	72	2445	1245	5271	1981	388
	B46, N47	54	1459	1229	7908	671	388

B-11

ANALYTICAL CALCULATIONS

Page 10 of 62

Subject SRLF WELD JOINT STRESS ANALYSES, TRUCKS 3+4
Originator E.R. VOLLERT Date 4/14/95
Checker Hasan H. Zirah Date 6-30-95

MEMBERS (4) ACTUATOR BM TO (3) Frame LIFTING

JOINT SKETCH:

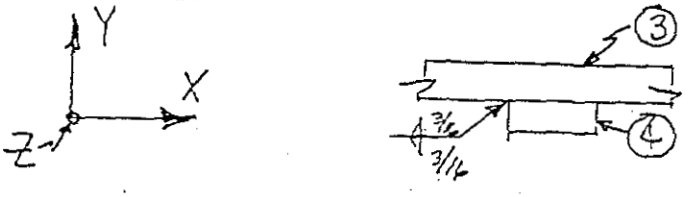

B44, N40
B46, N47

MAX WELD FORCES
DEADWEIGHT: $F_y = 1653$ LB, $M_x = 5655$ IN LB

TRANSPORTATION: $F_y = 1458$ LB, $M_x = 7911$ IN LB

WELD JOINT

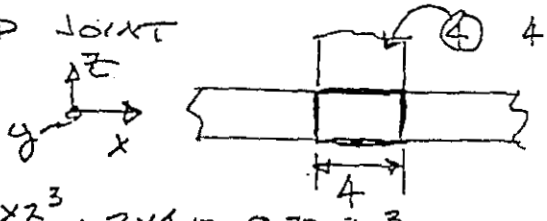

(4) 4x2x1/4 TUBE

(3) 2x2x1/4 TUBE

$I_x = \frac{2 \times 2^3}{12} + 2 \times 4 = 9.33 \text{ IN}^3$, $S_x = 9.33 \text{ IN}^2$

(WELD STRESSES)

DEADWEIGHT

$F_w = \frac{F_y}{12} + \frac{M_x}{S_x} = \frac{1653}{12} + \frac{5655}{9.33} = 744$ LB/IN

$\therefore F_w < 2700$ LB/IN ALLOWABLE

TRANSPORTATION:

$F_w = \frac{F_y}{12} + \frac{M_x}{9.33} = \frac{1458}{12} + \frac{7911}{9.33} = 969$ LB/IN OK

$F_w < 2775$ LB/IN ALLOWABLE

B-12

BD-6400-060.1 (07/93)

DESIGN CALCULATION

(1) Drawing H-2-690044 (2) Doc. No. _____ (3) Page 11 of 62
(4) Building N/A (5) Rev. _____ (6) Job No. _____
(7) Subject Core Sampler Truck Nos. 3 & 4 Shielded Receiver Lifting Frame Assembly
(8) Originator F. R. VOLLERT Date 4/3/95
(9) Checker Hasan H Zaki Date 6-30-95

DEAD WEIGHT ANALYSIS
(Ref. Drawings H-2-690043 and 690044 Sh. 1 & 2)

WELD JOINT FORCES: GLOBAL COORDINATES

MEMBERS 3 TO 3 MID HORIZ Frame LIFTING

JOINT SKETCH:

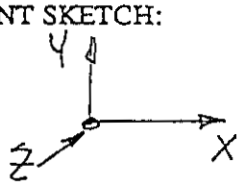

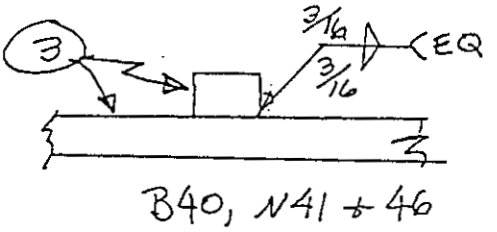

With Mz Restrained at Nodes 85 and 86

Moveable Frame Position	Beam and Node Numbers	Fx lbs	Fy lbs	Fz lbs	Mx in-lbs	My in-lbs	Mz in-lbs
UP	B40, N41	0	9	761	205	49	1
	B40, N46	0	9	761	205	50	1
DOWN	B40, N41	0	9	834	215	49	0
	B40, N46	0	9	834	215	50	0

Without Mz Restrained at Nodes 85 and 86

Moveable Frame Position	Beam and Node Numbers	Fx lbs	Fy lbs	Fz lbs	Mx in-lbs	My in-lbs	Mz in-lbs
UP	B40, N41	0	9	756	204	49	1
	B40, N46	0	9	756	204	50	1
DOWN	B40, N41	0	9	837	215	49	0
	B40, N46	0	9	837	215	50	0

B-13

DESIGN CALCULATION

(1) Drawing H-2-690044 (2) Doc. No. _____ (3) Page 12 of 62
(4) Building N/A (5) Rev. _____ (6) Job No. _____
(7) Subject Core Sampler Truck Nos. 3 & 4 Shielded Receiver Lifting Frame Assembly
(8) Originator F. R. VOLLERT Date 4/6/95
(9) Checker Hasan H. Zaida Date 6-30-95

TRANSPORT LOADS ANALYSIS

(Ref. Drawings H-2-690043 and 690044 Sh. 1 & 2)

WELD JOINT FORCES: (Moveable Frame in Down Position)

MEMBERS (3) TO (3) MID HORIZ Frame LIFTING

JOINT SKETCH: GLOBAL COORDINATES

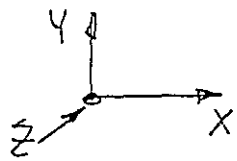

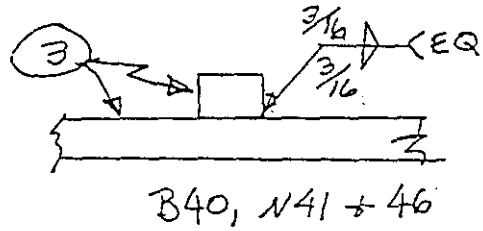

With Mz Restrained at Nodes 85 and 86

Longitudinal Load Direction	Beam and Node Numbers	Fx lbs	Fy lbs	Fz lbs	Mx in-lbs	My in-lbs	Mz in-lbs
FORWARD	B40, N41	1	69	1333	1514	59	155
	N46	9	47	1340	935	285	155
AFT	N41	10	90	938	1947	258	112
	N46	2	68	995	1379	5	112

Without Mz Restrained at Nodes 85 and 86

Longitudinal Load Direction	Beam and Node Numbers	Fx lbs	Fy lbs	Fz lbs	Mx in-lbs	My in-lbs	Mz in-lbs
FORWARD	B40, N41	1	75	1244	1608	69	167
	N46	9	52	1251	1062	296	167
AFT	N41	9	90	937	1944	242	132
	N46	1	68	944	1377	12	132

B-14

ANALYTICAL CALCULATIONS

Page 13 of 62

Subject SRLF WELD JOINT STRESS ANALYSES, TRUCKS 3+4

Originator F.R. VOLLERT Date 4/19/95

Checker Hassan H. Zenda Date 6-30-95

MEMBERS (3) TO (3) MID HORIZ Frame LIFTING

JOINT SKETCH:

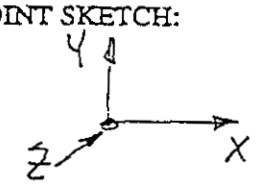

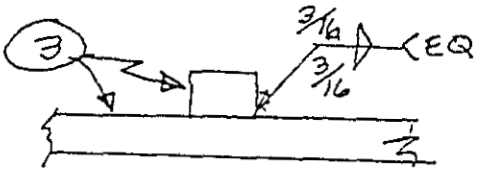

B40, N41 + 46

MAXIMUM WELD FORCES

(DEADWEIGHT) $F_z = 837$ LB, $M_x = 215$ IN LB

(TRANSPORTATION) $F_z = 938$ LB, $M_x = 1947$ IN LB

WELD IS 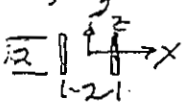 $L_w = 4''$, $S_x = 1.33$

WELD STRESSES

(DEADWEIGHT)

BENDING $F_{w,B} = \frac{M_x}{S_x} = \frac{215}{1.33} = 162$ LB/IN

SHEAR $F_{w,S} = \frac{F_z}{L_w} = \frac{837}{4} = 209$ LB/IN

$\sqrt{\Sigma F_w^2} = \sqrt{162^2 + 209^2} = 264$ LB/IN < 2275 LB/IN ALLOWABLE

(TRANSPORTATION)

BENDING $F_{w,B} = \frac{M_x}{S_x} = \frac{1947}{1.33} = 1464$ LB/IN

SHEAR $F_{w,S} = \frac{F_z}{L_w} = \frac{938}{4} = 234$

$\sqrt{\Sigma F_w^2} = \sqrt{1464^2 + 234^2} = 1478$ LB/IN < 2275 LB/IN

ALLOWABLE

B-15

BD-6400-060.1 (07/93)

DESIGN CALCULATION

(1) Drawing H-2-690044 (2) Doc. No. _____ (3) Page 14 of 62
(4) Building N/A (5) Rev. _____ (6) Job No. _____
(7) Subject Core Sampler Truck Nos. 3 & 4 Shielded Receiver Lifting Frame Assembly
(8) Originator F.R. VOLLERT Date 4/4/95
(9) Checker Hasan H. Tuh Date 6-30-95

DEAD WEIGHT ANALYSIS
(Ref. Drawings H-2-690043 and 690044 Sh. 1 & 2)

WELD JOINT FORCES: GLOBAL COORDINATES

MEMBERS (3) TO (3) EDGE HORIZ Frame LIFTING

JOINT SKETCH:

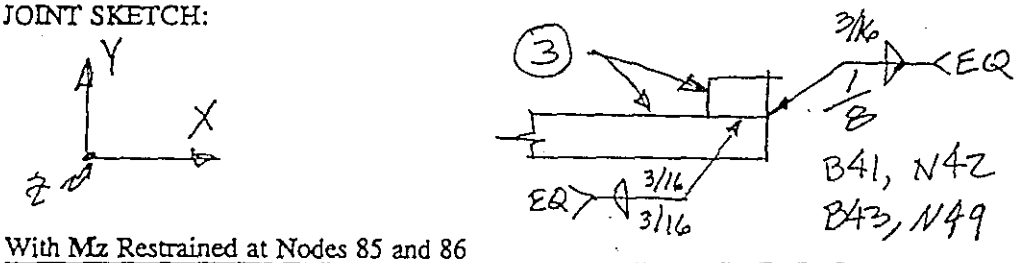

With Mz Restrained at Nodes 85 and 86

Moveable Frame Position	Beam and Node Numbers	Fx lbs	Fy lbs	Fz lbs	Mx in-lbs	My in-lbs	Mz in-lbs
UP	B41, N42	0	369	49	1424	193	1
	B43, N49	0	369	49	1426	192	1
DOWN	B41, N42	0	369	60	1503	176	0
	B43, N49	0	369	60	1504	176	0

Without Mz Restrained at Nodes 85 and 86

Moveable Frame Position	Beam and Node Numbers	Fx lbs	Fy lbs	Fz lbs	Mx in-lbs	My in-lbs	Mz in-lbs
UP	B41, N42	0	369	51	1423	194	1
	B43, N49	0	369	51	1425	193	1
DOWN	B41, N42	0	369	59	1504	176	0
	B43, N49	0	369	59	1505	175	0

B-16

DESIGN CALCULATION

(1) Drawing H-2-690044 (2) Doc. No. _____ (3) Page 15 of 62
(4) Building N/A (5) Rev. _____ (6) Job No. _____
(7) Subject Core Sampler Truck Nos. 3 & 4 Shielded Receiver Lifting Frame Assembly
(8) Originator E.R. Volkert Date 4/7/95
(9) Checker Hasan H. Zaidi Date 6-30-95

TRANSPORT LOADS ANALYSIS
(Ref. Drawings H-2-690043 and 690044 Sh. 1 & 2)

WELD JOINT FORCES: (Moveable Frame in Down Position)

MEMBERS 3 TO 3 EDGE HORIZONTAL Frame LIFTING

JOINT SKETCH: GLOBAL COORDINATES

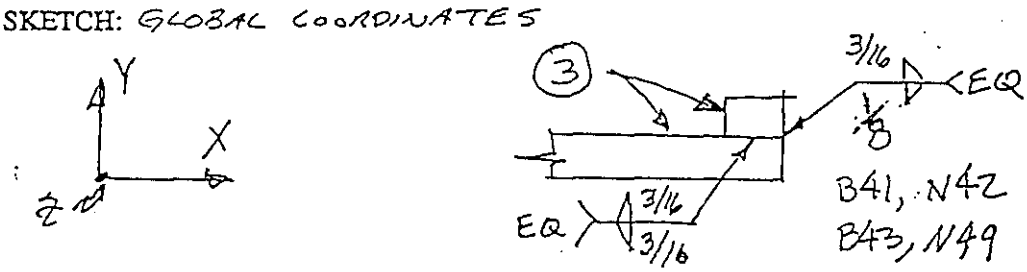

With Mz Restrained at Nodes 85 and 86

Longitudinal Load Direction	Beam and Node Numbers	Fx lbs	Fy lbs	Fz lbs	Mx in-lbs	My in-lbs	Mz in-lbs
FORWARD	B41, N42	124	423	59	3022	368	99
	B43, N49	194	269	214	470	1823	99
AFT	B41, N42	194	589	277	4263	2450	32
	B43, N49	124	432	4	143	692	32

Without Mz Restrained at Nodes 85 and 86

Longitudinal Load Direction	Beam and Node Numbers	Fx lbs	Fy lbs	Fz lbs	Mx in-lbs	My in-lbs	Mz in-lbs
FORWARD	B41, N42	126	429	70	3067	388	107
	B43, N49	191	291	203	650	1753	107
AFT	B41, N42	193	591	277	4290	2141	51
	B43, N49	125	431	4	115	701	51

B-17

ANALYTICAL CALCULATIONS

Page 16 of 62

Subject SALF WELD JOINT STRESS ANALYSES, TRUCKS 3 & 4

Originator F.R. VOLLERT Date 4/19/95

Checker Hasan H. Zeidan Date 6-20-95

MEMBERS (3) TO (3) EDGE HORIZ Frame LIFTING

JOINT SKETCH:

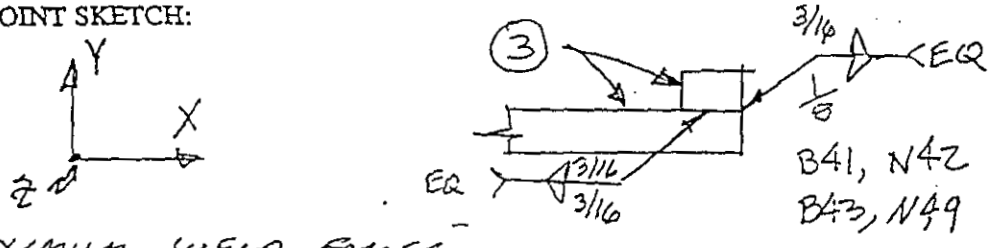

MAXIMUM WELD FORCES

(DEADWEIGHT) $M_x = 1505$ IN LB

(TRANSPORTATION) $M_x = 4290$ IN LB, $M_y = 2141$ IN LB

WELD IS

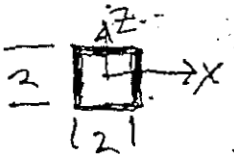

$I_x = I_z = 5.33 \text{ IN}^3$

$S_x = S_z = 5.33 \text{ IN}^2$

$J_w = 10.66 \text{ IN}^3$, $r' = \sqrt{2}$ IN

WELD THICKNESS AVE $= \left(\frac{3 \times 3}{16} + \frac{1}{8}\right) \div \frac{1}{4} = 0.172$ IN

ALLOWABLE WELD STRESS $= 0.172 \times 14800 = 2546$ LB/IN

WELD STRESSES

(DEADWEIGHT) $f_w = \frac{M_x}{S_x} = \frac{1505}{5.33} = 282$ LB/IN OK

(TRANSPORTATION)

BENDING $f_{w,B} = \frac{M_x}{S_x} = \frac{4290}{5.33} = 809$ LB/IN

SHEAR $f_{w,S} = \frac{M_y r'}{J_w} = \frac{2141 \times \sqrt{2}}{10.66} = 284$ LB/IN

$\sqrt{2 f_w^2} = \sqrt{809^2 + 284^2} = 857$ LB/IN < 2546 LB/IN

ALLOWABLE

B-18

BD-6400-060.1 (07/93)

DESIGN CALCULATION

(1) Drawing H-2-690044 (2) Doc. No. _____ (3) Page 17 of 62
(4) Building N/A (5) Rev. _____ (6) Job No. _____
(7) Subject Core Sampler Truck Nos. 3 & 4 Shielded Receiver Lifting Frame Assembly
(8) Originator F.R. VOLLERT Date 4/4/95
(9) Checker Hasan H. Tinda Date 4-20-95

DEAD WEIGHT ANALYSIS
(Ref. Drawings H-2-690043 and 690044 Sh. 1 & 2)

WELD JOINT FORCES: GLOBAL COORDINATES

MEMBERS (3) TO TOP OF (5) Frame LIFTING

JOINT SKETCH:

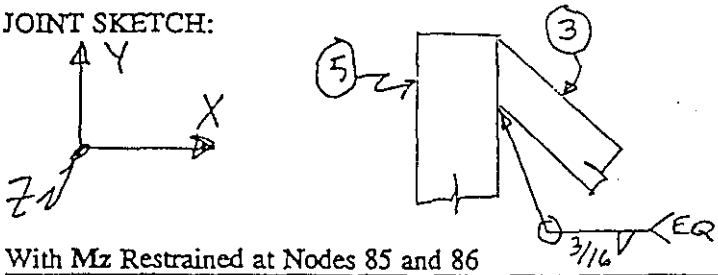

B 17, N4
B 35, N21

With Mz Restrained at Nodes 85 and 86

Moveable Frame Position	Beam and Node Numbers	Fx lbs	Fy lbs	Fz lbs	Mx in-lbs	My in-lbs	Mz in-lbs
UP	B17, N4	192	56	20	84	396	1175
	B35, N21	192	56	20	84	396	1175
DOWN	B17, N4	31	108	20	58	336	1098
	B35, N21	31	107	20	58	335	1099

Without Mz Restrained at Nodes 85 and 86

Moveable Frame Position	Beam and Node Numbers	Fx lbs	Fy lbs	Fz lbs	Mx in-lbs	My in-lbs	Mz in-lbs
UP	B17, N4	193	57	21	93	410	1173
	B35, N21	193	57	21	93	410	1173
DOWN	B17, N4	30	108	19	54	329	1099
	B35, N21	30	108	19	54	329	1100

B-19

DESIGN CALCULATION

(1) Drawing H-2-690044 (2) Doc. No. _____ (3) Page 18 of 62
(4) Building N/A (5) Rev. _____ (6) Job No. _____
(7) Subject Core Sampler Truck Nos. 3 & 4 Shielded Receiver Lifting Frame Assembly
(8) Originator F.R. Volkert Date 4/7/95
(9) Checker Hassan H. Zeidan Date 6-30-95

TRANSPORT LOADS ANALYSIS
(Ref. Drawings H-2-690043 and 690044 Sh. 1 & 2)

WELD JOINT FORCES: (Moveable Frame in Down Position)

MEMBERS (3) TO TOP OF (5) Frame LIFTING

GLOBAL COORDINATES
JOINT SKETCH:

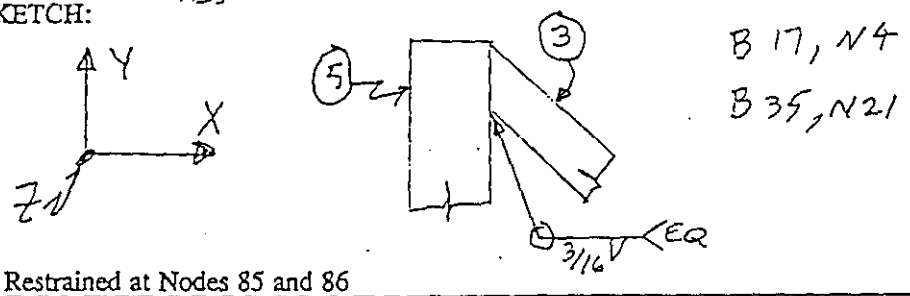

With Mz Restrained at Nodes 85 and 86

Longitudinal Load Direction	Beam and Node Numbers	Fx lbs	Fy lbs	Fz lbs	Mx in-lbs	My in-lbs	Mz in-lbs
FORWARD	B17, N4	133	56	63	828	726	1640
	B35, N21	13	176	10	546	514	1415
AFT	B17, N4	108	77	8	298	532	1424
	B35, N21	42	181	77	744	1017	1038

Without Mz Restrained at Nodes 85 and 86

Longitudinal Load Direction	Beam and Node Numbers	Fx lbs	Fy lbs	Fz lbs	Mx in-lbs	My in-lbs	Mz in-lbs
FORWARD	B17, N4	146	44	60	791	664	1650
	B35, N21	26	184	21	494	220	1354
AFT	B17, N4	117	68	9	297	521	1429
	B35, N21	50	188	78	746	1019	1033

B-20

ANALYTICAL CALCULATIONS

Subject SRLF WELD JOINT STRESS ANALYSIS, TRUCKS 3+4
Originator F. R. Voelert Date 4/20/95
Checker Hassan H. Zaki Date 6-30-95

MEMBERS (3) TO (5) TOP Frame LIFTING

JOINT SKETCH:

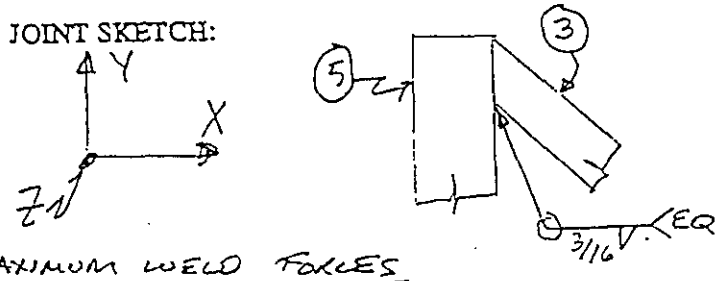

B 17, N4
B 35, N21

MAXIMUM WELD FORCES

(DEADWEIGHT) $M_z = 1175$ IN-LB, $M_y = 396$ IN LB

(TRANSPORTATION) $M_z = 1650$ IN LB, $M_y = 664$ IN LB, $M_x = 791$ IN LB

WELD 2x2 ≈

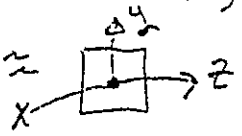

$S_y = S_z = 5.33$, $J_w = 10.66$ IN^3

$r' = \sqrt{2}$

WELD STRESSES

(DEADWEIGHT) $F_w = \frac{M_z + M_y}{5.33} = \frac{1175+396}{5.33} = 295$ LB/IN OK

(TRANSPORTATION)

BENDING $F_{w,B} = \frac{M_z + M_y}{5.33} = \frac{1650+664}{5.33} = 434$ LB/IN

SHEAR $F_{w,s} = \frac{M_x r'}{J_w} = \frac{791 \times \sqrt{2}}{10.66} = 105$ LB/IN

$\sqrt{\Sigma F_w^2} = \sqrt{434^2 + 105^2} = 447$ LB/IN ≤ 2775 LB/IN

ALLOWABLE

B-21

BD-6400-060.1 (07/93)

DESIGN CALCULATION

(1) Drawing H-2-690044 (2) Doc. No. _____ (3) Page 20 of 62
(4) Building N/A (5) Rev. _____ (6) Job No. _____
(7) Subject Core Sampler Truck Nos. 3 & 4 Shielded Receiver Lifting Frame Assembly
(8) Originator F.R. VOLLERT Date 4/3/95
(9) Checker Hasan H. Zirk Date 6-20-95

DEAD WEIGHT ANALYSIS

(Ref. Drawings H-2-690043 and 690044 Sh. 1 & 2)

WELD JOINT FORCES: GLOBAL COORDINATES

MEMBERS 3 TO 3 (UPPER BRACE) Frame LIFTING

JOINT SKETCH:

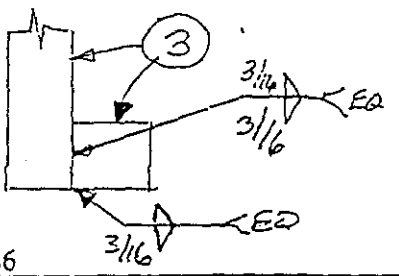

B17, N39
B35, N48

With Mz Restrained at Nodes 85 and 86

Moveable Frame Position	Beam and Node Numbers	Fx lbs	Fy lbs	Fz lbs	Mx in-lbs	My in-lbs	Mz in-lbs
UP	B17, N39	192	44	20	350	19	1979
	B35, N48	192	44	20	350	19	1979
DOWN	B17, N39	31	120	20	376	79	1947
	B35, N48	31	120	20	376	79	1947

Without Mz Restrained at Nodes 85 and 86

Moveable Frame Position	Beam and Node Numbers	Fx lbs	Fy lbs	Fz lbs	Mx in-lbs	My in-lbs	Mz in-lbs
UP	B17, N39	193	45	21	364	27	1978
	B35, N48	193	45	21	364	27	1978
DOWN	B17, N39	30	120	19	369	75	1947
	B35, N48	30	120	19	369	75	1948

B-22

DESIGN CALCULATION

(1) Drawing H-2-690044 (2) Doc. No. _____ (3) Page 21 of 62
(4) Building N/A (5) Rev. _____ (6) Job No. _____
(7) Subject Core Sampler Truck Nos. 3 & 4 Shielded Receiver Lifting Frame Assembly
(8) Originator F. R. Vollert Date 4/5/95
(9) Checker Hassan H. Zaidi Date 6-30-95

TRANSPORT LOADS ANALYSIS
(Ref. Drawings H-2-690043 and 690044 Sh. 1 & 2)

WELD JOINT FORCES: (Moveable Frame in Down Position)

MEMBERS 2 TO 3 (UPPER BRACE) Frame LIFTING

JOINT SKETCH: GLOBAL COORDINATES

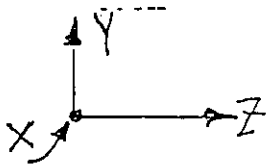

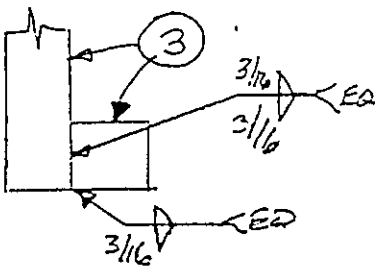

B17, N39
B35, N48

With Mz Restrained at Nodes 85 and 86

Longitudinal Load Direction	Beam and Node Numbers	Fx lbs	Fy lbs	Fz lbs	Mx in-lbs	My in-lbs	Mz in-lbs
FORWARD	B17, N39	128	70	68	611	648	2550
	B35, N48	18	190	6	366	342	2078
AFT	B17, N39	113	91	13	520	734	2745
	B35, N48	37	196	82	998	646	2021

Without Mz Restrained at Nodes 85 and 86

Longitudinal Load Direction	Beam and Node Numbers	Fx lbs	Fy lbs	Fz lbs	Mx in-lbs	My in-lbs	Mz in-lbs
FORWARD	B17, N39	141	59	65	582	646	2580
	B35, N48	32	199	26	1007	710	2020
AFT	B17, N39	122	82	13	531	744	2749
	B35, N48	44	203	82	1008	655	2017

B-23

ANALYTICAL CALCULATIONS

Page 22 of 62

Subject SRLF WELD JOINT STRESS ANALYSES, TRUCKS 3 + 4

Originator F. R. VOLLERT Date 4/19/95

Checker Hasan H. Tiah Date 6-30-95

MEMBERS (3) TO (3) (UPPER BRACE) Frame LIFTING

JOINT SKETCH:

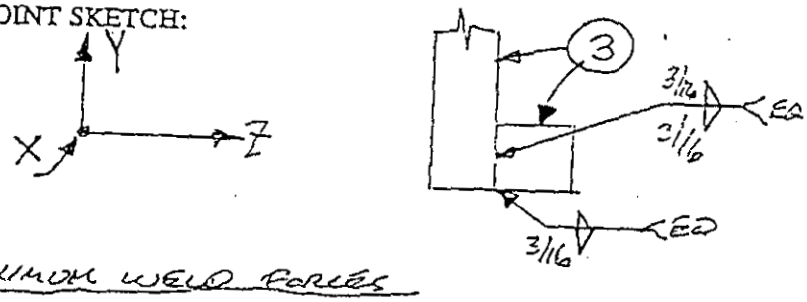

B17, N39
B35, N48

MAXIMUM WELD FORCES

(DEADWEIGHT) $M_X = 364$ IN LB, $M_Z = 1978$ IN LB

(TRANSPORTATION) $M_X = 531$ IN LB, $M_Y = 744$ IN LB, $M_Z = 2749$ IN LB

WELD SKETCH

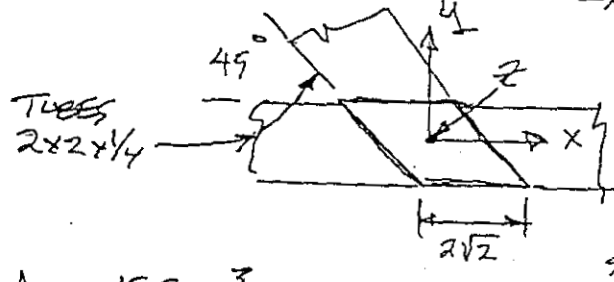

$I_x = \frac{2 \times 2^3}{12} + 2 \times 2\sqrt{2}(1)^2 = 7.0 \text{ IN}^3$

$S_x = 7.0 \text{ IN}^2$

$I_y = \frac{(2\sqrt{2})^3(2)}{12} + 2 \times 2(\sqrt{2})^2$

$I_y = 11.8 \text{ IN}^3$

$S_y = \frac{I_y}{1+\sqrt{2}} = 4.90 \text{ IN}^2$

$J_w = 18.8 \text{ IN}^3$

$r = \sqrt{1^2 + (1+\sqrt{2})^2} = 2.61 \text{ IN}$

WELD STRESSES

(DEADWEIGHT)

BENDING, $F_{w,B} = \frac{M_X}{S_X} = \frac{364}{7} = 52$ LB/IN

SHEAR, $F_{w,S} = \frac{M_Z r}{J_w} = \frac{1978 \times 2.61}{18.80} = 275$ LB/IN

$\sqrt{\Sigma F_w^2} = \sqrt{52^2 + 275^2} = 280$ LB/IN < 2775 LB/IN ALLOWED

B-24

BD-6400-060.1 (07/93)

ANALYTICAL CALCULATIONS

Subject SRLF WELD JOINT STRESS ANALYSES, TTPLUGS 3 & 4

Originator F.R. VOLLERT Date 4/19/95

Checker H. H. Zieda Date 6-30-95

③ TO ③ (UPPER), WELD STRESSES, CONTINUED

(TRANSPORTATION)

BENDING $F_{w,B} = \frac{M_x}{S_x} + \frac{M_y}{S_y} = \frac{531}{7.0} + \frac{744}{4.9} = 228$ LB/IN

SHEAR $F_{w,s} = \frac{M_z 5'}{I_w} = \frac{2479 \times 2.61}{18.8} = 344$ LB/IN

$\sqrt{\Sigma F_w^2} = \sqrt{228^2 + 344^2} = 413$ LB/IN < 2775 LB/IN ALLOWABLE

B-25

BD-6400-060.1 (07/93)

DESIGN CALCULATION

(1) Drawing H-2-690044 (2) Doc. No. _____ (3) Page 24 of 62
(4) Building N/A (5) Rev. _____ (6) Job No. _____
(7) Subject Core Sampler Truck Nos. 3 & 4 Shielded Receiver Lifting Frame Assembly
(8) Originator F. R. VOLLERT Date 4/3/95
(9) Checker Hassan H. Zaida Date 6-30-95

DEAD WEIGHT ANALYSIS
(Ref. Drawings H-2-690043 and 690044 Sh. 1 & 2)

WELD JOINT FORCES: GLOBAL COORDINATES

MEMBERS 3 TO 3 VERT BRACE Frame LIFTING

JOINT SKETCH:

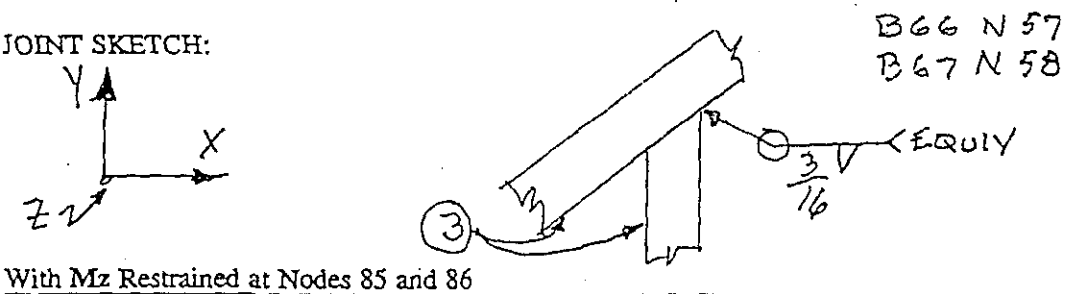

With Mz Restrained at Nodes 85 and 86

Moveable Frame Position	Beam and Node Numbers	Fx lbs	Fy lbs	Fz lbs	Mx in-lbs	My in-lbs	Mz in-lbs
UP	B66, N57	11	121	23	522	63	116
	B67, N58	11	120	23	523	64	115
DOWN	B66, N57	2	60	18	431	25	99
	B67, N58	2	60	18	431	26	99

Without Mz Restrained at Nodes 85 and 86

Moveable Frame Position	Beam and Node Numbers	Fx lbs	Fy lbs	Fz lbs	Mx in-lbs	My in-lbs	Mz in-lbs
UP	B66, N57	11	120	24	529	75	114
	B67, N58	11	120	24	530	76	113
DOWN	B66, N57	2	60	18	427	19	98
	B67, N58	2	60	18	428	20	97

B-26

DESIGN CALCULATION

(1) Drawing H-2-690044 (2) Doc. No. _____ (3) Page 25 of 62
(4) Building N/A (5) Rev. _____ (6) Job No. _____
(7) Subject Core Sampler Truck Nos. 3 & 4 Shielded Receiver Lifting Frame Assembly
(8) Originator F.R. VOLLERT Date 4/5/95
(9) Checker Hassan H. Zinda Date 6-30-95

TRANSPORT LOADS ANALYSIS
(Ref. Drawings H-2-690043 and 690044 Sh. 1 & 2)

WELD JOINT FORCES: (Moveable Frame in Down Position)

MEMBERS (3) TO (5) VERT BRACE Frame LIFTING

JOINT SKETCH: GLOBAL COORDINATES

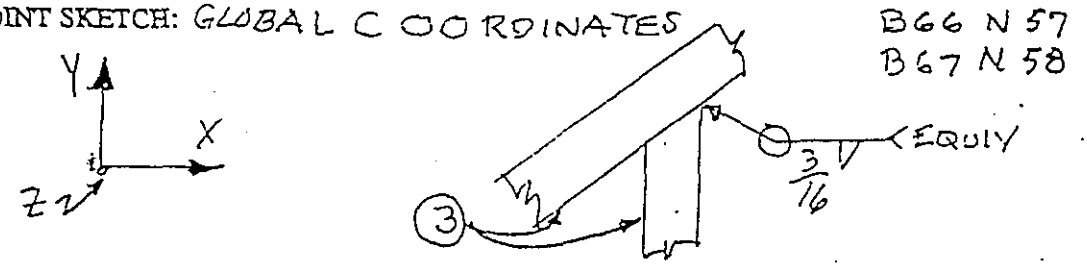

With Mz Restrained at Nodes 85 and 86

Longitudinal Load Direction	Beam and Node Numbers	Fx lbs	Fy lbs	Fz lbs	Mx in-lbs	My in-lbs	Mz in-lbs
FORWARD	B66,N57	5	242	122	1241	52	123
	B67,N58	20	135	111	605	250	419
AFT	B66,N57	15	298	136	1082	47	188
	B67,N58	10	104	113	637	162	336

Without Mz Restrained at Nodes 85 and 86

Longitudinal Load Direction	Beam and Node Numbers	Fx lbs	Fy lbs	Fz lbs	Mx in-lbs	My in-lbs	Mz in-lbs
FORWARD	B66,N57	3	235	123	1260	36	96
	B67,N58	19	133	99	417	212	401
AFT	B66,N57	15	301	138	1094	63	190
	B67,N58	9	107	114	649	178	339

B-27

ANALYTICAL CALCULATIONS

Page 26 of 62

Subject SRLE WELD JOINT STRESS ANALYSES, TRUCKS 3 & 4

Originator F.R. VOLKERT Date 5/19/95

Checker Hasan H. Zinda Date 6-30-95

MEMBERS (3) TO (3) VERT BRACE Frame LIFTING

JOINT SKETCH:

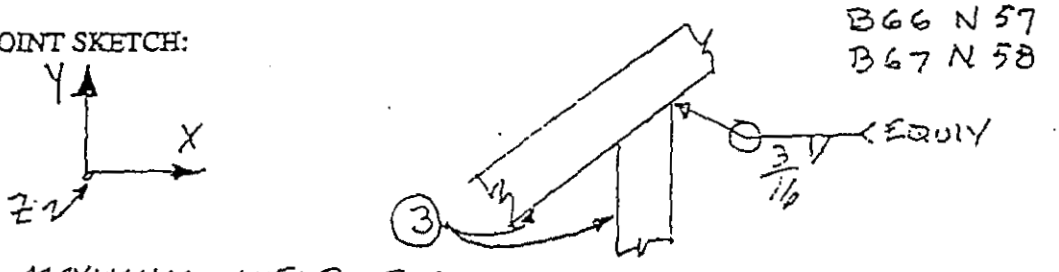

MAXIMUM WELD FORCES

(DEADWEIGHT) $M_X = 530$ IN LB

(TRANSPORTATION) $M_X = 1260$ IN LB

WELD IS CLOSELY A 2x2 ▭ (SLOPED EDGES LONGER)

$S_X \approx 5.33$ IN²

WELD STRESSES

(DEADWEIGHT) $F_W = \frac{M_X}{S_X} = 100$ LB/IN OK

(TRANSPORTATION) $F_W = \frac{M_X}{S_X} = 236$ LB/IN OK

B-28

BD-6400-060.1 (07/93)

DESIGN CALCULATION

(1) Drawing H-2-690044 (2) Doc. No. _____ (3) Page 27 of 62
(4) Building N/A (5) Rev. _____ (6) Job No. _____
(7) Subject Core Sampler Truck Nos. 3 & 4 Shielded Receiver Lifting Frame Assembly
(8) Originator F.R. VOLLERT Date 4/3/95
(9) Checker Hasan H. Zinda Date 6-30-95

DEAD WEIGHT ANALYSIS
(Ref. Drawings H-2-690043 and 690044 Sh. 1 & 2)

WELD JOINT FORCES: GLOBAL COORDINATES

MEMBERS (3) TO (3) LOWER BRACE Frame LIFTING

JOINT SKETCH:

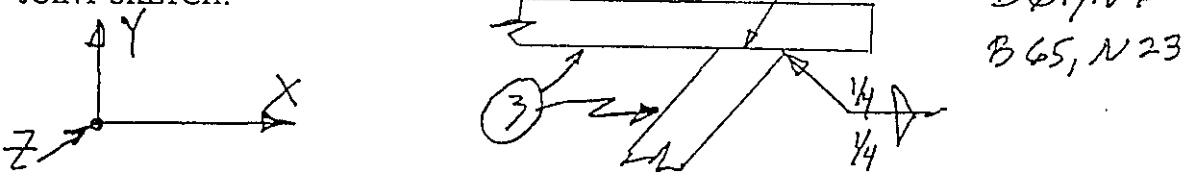

With Mz Restrained at Nodes 85 and 86

Moveable Frame Position	Beam and Node Numbers	Fx lbs	Fy lbs	Fz lbs	Mx in-lbs	My in-lbs	Mz in-lbs
UP	B64, N6	19	215	12	789	115	1443
	B65, N23	19	214	12	790	116	1443
DOWN	B64, N6	49	24	8	657	67	1263
	B65, N23	49	24	8	658	67	1263

Without Mz Restrained at Nodes 85 and 86

Moveable Frame Position	Beam and Node Numbers	Fx lbs	Fy lbs	Fz lbs	Mx in-lbs	My in-lbs	Mz in-lbs
UP	B64, N6	20	216	12	798	131	1443
	B65, N23	19	216	13	799	132	1443
DOWN	B64, N6	49	23	7	653	59	1263
	B65, N23	49	23	8	654	59	1263

B-29

DESIGN CALCULATION

(1) Drawing H-2-690044 (2) Doc. No. _____ (3) Page 28 of 62
(4) Building N/A (5) Rev. _____ (6) Job No. _____
(7) Subject Core Sampler Truck Nos. 3 & 4 Shielded Receiver Lifting Frame Assembly
(8) Originator F.R. Voelkert Date 4/6/95
(9) Checker Hassan H. Zaidi Date 6-30-95

TRANSPORT LOADS ANALYSIS
(Ref. Drawings H-2-690043 and 690044 Sh. 1 & 2)

WELD JOINT FORCES: (Moveable Frame in Down Position)

MEMBERS 3 TO 3 LOWER BRACE Frame LIFTING

JOINT SKETCH: GLOBAL COORDINATES

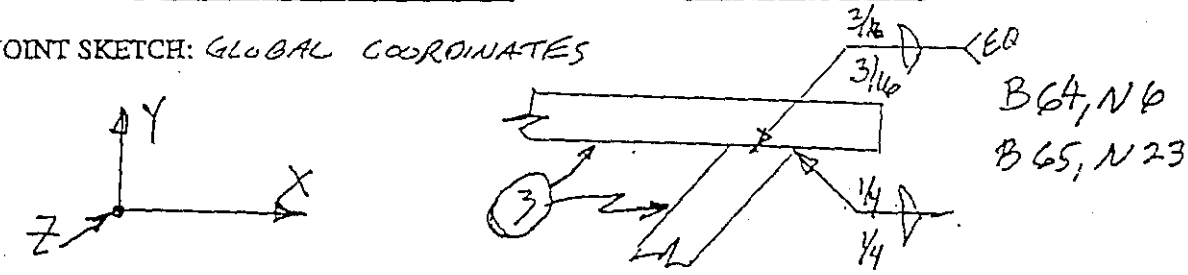

With Mz Restrained at Nodes 85 and 86

Longitudinal Load Direction	Beam and Node Numbers	Fx lbs	Fy lbs	Fz lbs	Mx in-lbs	My in-lbs	Mz in-lbs
FORWARD	B64, N6	48	185	71	2194	511	1967
	B65, N23	15	21	104	1640	259	804
AFT	B64, N6	114	97	136	3095	886	2431
	B65, N23	70	138	82	1223	296	978

Without Mz Restrained at Nodes 85 and 86

Longitudinal Load Direction	Beam and Node Numbers	Fx lbs	Fy lbs	Fz lbs	Mx in-lbs	My in-lbs	Mz in-lbs
FORWARD	B64, N6	42	196	74	2204	393	1984
	B65, N23	10	7	97	1365	315	739
AFT	B64, N6	114	100	137	3120	876	2442
	B65, N23	70	140	83	1247	286	966

B-30

ANALYTICAL CALCULATIONS

Page 29 of 62

Subject SRLF WELD JOINT STRESS ANALYSES, TRUCKS 3 + 4

Originator F.R. VOLLERT Date 4/19/95

Checker Hassan H. Zaida Date 6-30-95

MEMBERS (3) TO (3) LOWER BRACE Frame LIFTING

JOINT SKETCH:

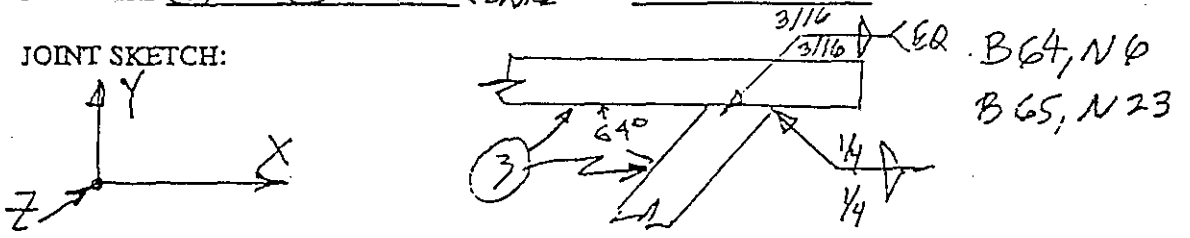

MAXIMUM WELD FORCES

(DEADWEIGHT) $M_x = 798$ IN-LB, $M_z = 1443$ IN LB

(TRANSPORTATION) $M_x = 3120$ IN-LB, $M_y = 876$ IN-LB, $M_z = 2442$ IN LB

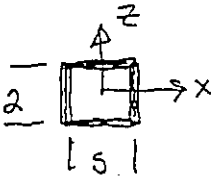

$$s = \frac{2}{\sin 64^\circ} = 2.22 \text{ in}$$

$$I_z = 2 \times 2 \times (1.11)^2 + 2 \times 2.22^3/12 = 6.75 \text{ in}^3, \quad S_z = 6.08 \text{ in}^2$$

$$I_x = \frac{2 \times 2^3}{12} + 2 \times 2.22 = 5.77 = S_x$$

NOTE: AVE WELD t IS $\frac{0.25 + 0.1875}{2} = 0.22''$

ALLOWABLE = 3150 LB/IN

$$J_w = 11.85 \text{ in}^3, \quad r' = \sqrt{1^2 + 1.11^2} = 1.49$$

WELD STRESSES

(DEADWEIGHT) $F_w = \frac{M_x}{S_x} + \frac{M_z}{S_z} = \frac{798}{5.77} + \frac{1443}{6.08} = 376$ LB/IN OK

(TRANSPORTATION)

BENDING $F_{w,z} = \frac{M_x}{S_x} + \frac{M_z}{S_z} = \frac{3120}{5.77} + \frac{2442}{6.08} = 942$ LB/IN

SHEAR, $F_{w,s} = \frac{M_y r'}{J_w} = \frac{876 \times 1.49}{11.85} = 110$ LB/IN

$$\sqrt{\Sigma F_w^2} = \sqrt{942^2 + 110^2} = 948 \text{ LB/IN} < 3150 \text{ LB/IN ALLOWED}$$

B-31

BD-8400-060.1 (07/93)

DESIGN CALCULATION

(1) Drawing H-2-690044 (2) Doc. No. _____ (3) Page 30 of 62
(4) Building N/A (5) Rev. _____ (6) Job No. _____
(7) Subject Core Sampler Truck Nos. 3 & 4 Shielded Receiver Lifting Frame Assembly
(8) Originator E.R. VOLKERT Date 4/4/95
(9) Checker Hasan H. Zaidi Date 6-30-95

DEAD WEIGHT ANALYSIS
(Ref. Drawings H-2-690043 and 690044 Sh. 1 & 2)

WELD JOINT FORCES: GLOBAL COORDINATES

MEMBERS 3 TO 3 VERT BRACE BOTTOM Frame LIFTING

JOINT SKETCH:

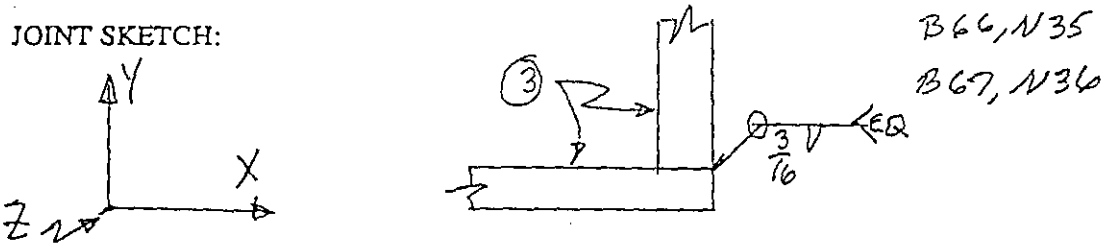

With Mz Restrained at Nodes 85 and 86

Moveable Frame Position	Beam and Node Numbers	Fx lbs	Fy lbs	Fz lbs	Mx in-lbs	My in-lbs	Mz in-lbs
UP	B66, N35	11	108	23	131	63	206
	B67, N36	11	108	23	132	64	205
DOWN	B66, N35	2	47	18	85	25	29
	B67, N36	2	47	18	86	26	29

Without Mz Restrained at Nodes 85 and 86

Moveable Frame Position	Beam and Node Numbers	Fx lbs	Fy lbs	Fz lbs	Mx in-lbs	My in-lbs	Mz in-lbs
UP	B66, N35	11	108	24	145	75	205
	B67, N36	11	107	24	146	76	204
DOWN	B66, N35	2	47	18	78	19	30
	B67, N36	2	48	18	79	20	30

B-32

DESIGN CALCULATION

(1) Drawing H-2-690044 (2) Doc. No. _____ (3) Page 31 of 62
(4) Building N/A (5) Rev. _____ (6) Job No. _____
(7) Subject Core Sampler Truck Nos. 3 & 4 Shielded Receiver Lifting Frame Assembly
(8) Originator E.R. Voulert Date 4/7/95
(9) Checker Hassan H. Zinda Date 6-20-95

TRANSPORT LOADS ANALYSIS
(Ref. Drawings H-2-690043 and 690044 Sh. 1 & 2)

WELD JOINT FORCES: (Moveable Frame in Down Position)

MEMBERS 3 TO 3 VERT BRACE BOTTOM Frame LIFTING
GLOBAL COORDINATES
JOINT SKETCH:

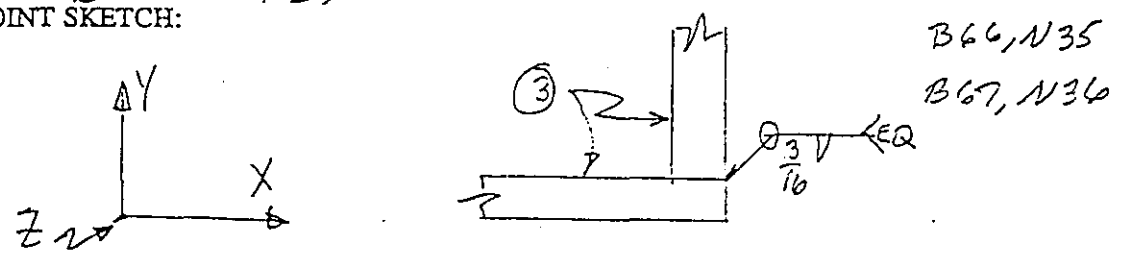

With Mz Restrained at Nodes 85 and 86

Longitudinal Load Direction	Beam and Node Numbers	Fx lbs	Fy lbs	Fz lbs	Mx in-lbs	My in-lbs	Mz in-lbs
FORWARD	B66, N35	10	228	126	2237	52	89
	B67, N36	14	150	115	2563	250	60
AFT	B66, N35	10	283	141	2809	47	156
	B67, N36	15	119	118	2599	162	7

Without Mz Restrained at Nodes 85 and 86

Longitudinal Load Direction	Beam and Node Numbers	Fx lbs	Fy lbs	Fz lbs	Mx in-lbs	My in-lbs	Mz in-lbs
FORWARD	B66, N35	9	220	128	2252	36	68
	B67, N36	13	148	104	2431	212	49
AFT	B66, N35	9	286	142	2832	63	151
	B67, N36	15	122	119	2621	178	2

B-33

ANALYTICAL CALCULATIONS

Subject SRLF WELD JOINT STRESS ANALYSES, TRUCKS 3 & 4
Originator F.R. VOLLERT Date 4/19/95
Checker Hasan H. Zaki Date 6-30-95

MEMBERS 3 TO 3 VERT BRACE BOTTOM Frame LIFTING

JOINT SKETCH:

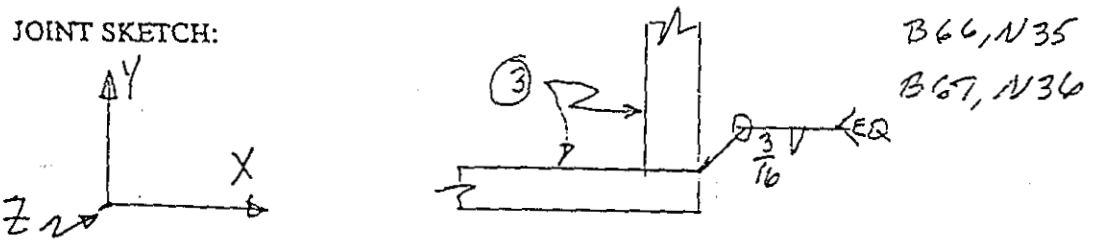

B66, N35
B67, N36

MAXIMUM WELD FORCES

(DEADWEIGHT) $M_X = 145$ IN LB, $M_Z = 205$ IN LB

(TRANSPORTATION) $M_X = 2832$ IN LB

FOR END WELD, 2x2

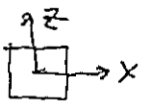

$S_X = S_Z = 5.33 \text{ IN}^2$

WELD STRESSES

(DEADWEIGHT) $F_W = \frac{M_X + M_Z}{5.33} = \frac{145+205}{5.33} = 66 \frac{LB}{IN}$ OK

(TRANSPORTATION) $F_W = \frac{M_X}{5.33} = \frac{2832}{5.33} = 531 \frac{LB}{IN}$ OK

B-34

BD-6400-060.1 (07/93)

DESIGN CALCULATION

(1) Drawing H-2-690044 (2) Doc. No. _____ (3) Page 33 of 62
(4) Building N/A (5) Rev. _____ (6) Job No. _____
(7) Subject Core Sampler Truck Nos. 3 & 4 Shielded Receiver Lifting Frame Assembly
(8) Originator F.R. VOLCERT Date 4/4/95
(9) Checker Hassan H. Zaidi Date 6-30-95

DEAD WEIGHT ANALYSIS

(Ref. Drawings H-2-690043 and 690044 Sh. 1 & 2)

WELD JOINT FORCES:

MEMBERS (3) TO (3) LOWER BRACE HORIZONTAL Frame LIFTING

JOINT SKETCH:

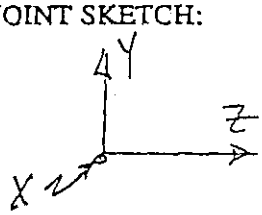

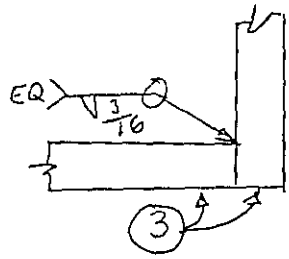

B48, N35 + N36

With Mz Restrained at Nodes 85 and 86

Moveable Frame Position	Beam and Node Numbers	Fx lbs	Fy lbs	Fz lbs	Mx in-lbs	My in-lbs	Mz in-lbs
UP	B48, N35	0	9	47	311	196	1
	N36	0	9	47	312	192	1
DOWN	N35	0	9	14	283	66	0
	N36	0	9	14	283	64	0

Without Mz Restrained at Nodes 85 and 86

Moveable Frame Position	Beam and Node Numbers	Fx lbs	Fy lbs	Fz lbs	Mx in-lbs	My in-lbs	Mz in-lbs
UP	B48, N35	0	9	57	309	241	1
	N36	0	9	57	310	237	1
DOWN	N35	0	9	9	284	44	0
	N36	0	9	9	285	41	0

B-35

DESIGN CALCULATION

(1) Drawing H-2-690044 (2) Doc. No. _____ (3) Page 34 of 62
(4) Building N/A (5) Rev. _____ (6) Job No. _____
(7) Subject Core Sampler Truck Nos. 3 & 4 Shielded Receiver Lifting Frame Assembly
(8) Originator F. R. Youkert Date 4/7/95
(9) Checker Hasan H. Ziada Date 6-30-95

TRANSPORT LOADS ANALYSIS
(Ref. Drawings H-2-690043 and 690044 Sh. 1 & 2)

WELD JOINT FORCES: (Moveable Frame in Down Position)

MEMBERS 3 TO 3 LOWER BRACE HORIZONTAL Frame LIFTING
GLOBAL COORDINATES
JOINT SKETCH:

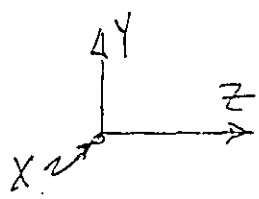

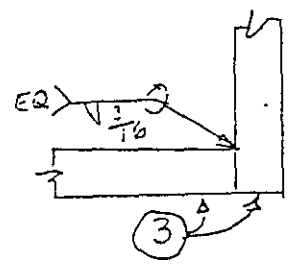

B48, N35 + N36

With Mz Restrained at Nodes 85 and 86

Longitudinal Load Direction	Beam and Node Numbers	Fx lbs	Fy lbs	Fz lbs	Mx in-lbs	My in-lbs	Mz in-lbs
FORWARD	B48, N35	55	174	93	3727	1858	71
	N36	64	152	86	3107	642	71
AFT	N35	67	186	122	3876	1738	53
	N36	59	163	114	3450	897	53

Without Mz Restrained at Nodes 85 and 86

Longitudinal Load Direction	Beam and Node Numbers	Fx lbs	Fy lbs	Fz lbs	Mx in-lbs	My in-lbs	Mz in-lbs
FORWARD	B48, N35	58	166	40	3595	1674	108
	N36	66	144	33	2931	921	108
AFT	N35	70	186	121	3841	1800	75
	N36	62	164	114	3465	961	75

B-36

ANALYTICAL CALCULATIONS

Subject SRLF WELD JOINT STRESS ANALYSES, TRUCKS 3+4

Originator E.R. VOLGART Date 4/19/95

Checker Hassan H. Zirah Date 6-30-95

MEMBERS (3) TO (3) LOWER BRACE HORIZONTAL Frame LIFTING

JOINT SKETCH:

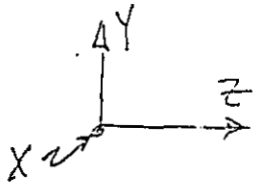

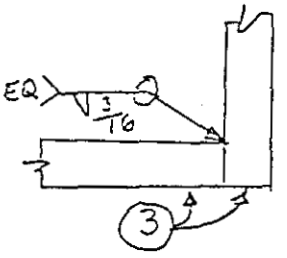

B48, N35 + N36

MAXIMUM WELD FORCES

(DEADWEIGHT) $M_x = 309$ IN LB, $M_y = 241$ IN LB

(TRANSPORTATION) $M_x = 3891$ IN LB, $M_y = 1800$ IN LB

END WELD 2x2

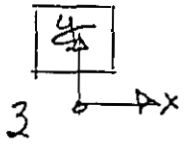

$S_x = S_y = 5.33\ IN^2$

WELD STRESSES

(DEADWEIGHT) $F_w = \frac{M_x + M_y}{5.33} = \frac{309 + 241}{5.33} = 103 \frac{LB}{IN}$ OK

(TRANSPORTATION) $F_w = \frac{M_x + M_y}{5.33} = \frac{3891 + 1800}{5.33} = 1068 \frac{LB}{IN}$ OK

B-37

BD-8400-060.1 (07/93)

DESIGN CALCULATION

(1) Drawing H-2-690044 (2) Doc. No. _____ (3) Page 36 of 62
(4) Building N/A (5) Rev. _____ (6) Job No. _____
(7) Subject Core Sampler Truck Nos. 3 & 4 Shielded Receiver Lifting Frame Assembly
(8) Originator E.R. Vaught Date 4/5/95
(9) Checker Hasan H. Tirh Date 6-30-95

DEAD WEIGHT ANALYSIS
(Ref. Drawings H-2-690043 and 690044 Sh. 1 & 2)

WELD JOINT FORCES: GLOBAL COORDINATES

MEMBERS (5) AND (3) TO (5) BOTTOM ENDS Frame LIFTING

JOINT SKETCH:

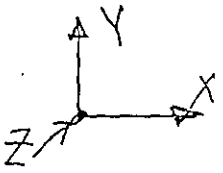

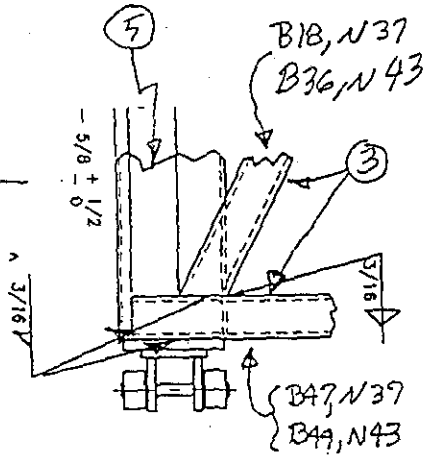

With Mz Restrained at Nodes 85 and 86

Moveable Frame Position	Beam and Node Numbers	Fx lbs	Fy lbs	Fz lbs	Mx in-lbs	My in-lbs	Mz in-lbs
UP	B47, N37	12	92	24	180	65	1101
	B49, N43	11	92	24	180	67	1099
	B18, N37	8	73	12	423	24	585
	B36, N43	7	72	12	422	24	584
DOWN	B47, N37	2	32	4	198	148	446
	B49, N43	3	32	4	198	147	447
	B18, N37	47	58	10	402	44	327
	B36, N43	47	58	10	401	44	327

Without Mz Restrained at Nodes 85 and 86

Moveable Frame Position	Beam and Node Numbers	Fx lbs	Fy lbs	Fz lbs	Mx in-lbs	My in-lbs	Mz in-lbs
UP	B47, N37	11	92	33	164	134	1096
	B49, N43	11	92	33	164	136	1094
	B18, N37	8	75	12	407	11	583
	B36, N43	8	74	12	406	11	582
DOWN	B47, N37	2	32	9	206	183	449
	B49, N43	2	32	9	206	182	449
	B18, N37	47	59	11	410	50	328
	B36, N43	47	59	11	410	50	328

B-38

DESIGN CALCULATION

(1) Drawing H-2-690044 (2) Doc. No. _____ (3) Page 37 of 62
(4) Building N/A (5) Rev. _____ (6) Job No. _____
(7) Subject Core Sampler Truck Nos. 3 & 4 Shielded Receiver Lifting Frame Assembly
(8) Originator F.R. VOLLERT Date 4/5/95
(9) Checker Hazem H. Zeidan Date 6-30-95

TRANSPORT LOADS ANALYSIS
(Ref. Drawings H-2-690043 and 690044 Sh. 1 & 2)

WELD JOINT FORCES: (Moveable Frame in Down Position)

MEMBERS ③ AND ③ TO ⑤ BOTTOM ENDS Frame LIFTING

JOINT SKETCH: GLOBAL COORDINATES

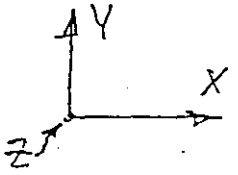

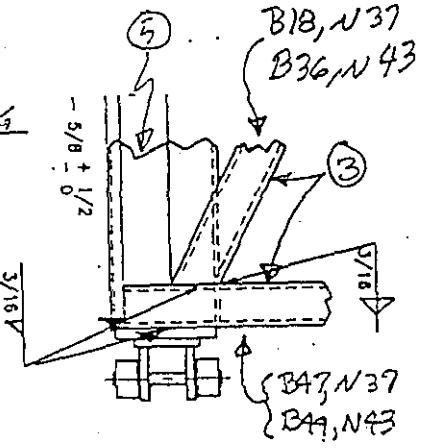

With Mz Restrained at Nodes 85 and 86

Longitudinal Load Direction	Beam and Node Numbers	Fx lbs	Fy lbs	Fz lbs	Mx in-lbs	My in-lbs	Mz in-lbs
FORWARD	B47, N37	43	46	222	1490	1110	525
	B49, N43	52	6	32	544	24	101
	B18, N37	44	82	43	1151	555	225
	B36, N43	44	131	1	514	248	251
AFT	B47, N37	60	90	265	1067	1920	1076
	B49, N43	41	37	6	851	674	612
	B18, N37	138	226	7	160	128	595
	B36, N43	70	59	23	59	200	580

Without Mz Restrained at Nodes 85 and 86

Longitudinal Load Direction	Beam and Node Numbers	Fx lbs	Fy lbs	Fz lbs	Mx in-lbs	My in-lbs	Mz in-lbs
FORWARD	B47, N37	47	47	170	1343	677	512
	B49, N43	55	11	73	500	273	60
	B18, N37	34	65	41	1019	466	220
	B36, N43	38	175	6	617	236	228
AFT	B47, N37	63	92	266	1060	1889	1086
	B49, N43	44	35	7	844	702	600
	B18, N37	138	226	7	171	134	594
	B36, N43	70	58	23	48	196	580

B-39

ANALYTICAL CALCULATIONS

Subject SRLF WELD JOINT STRESS ANALYSES, TRUCKS 3 & 4

Originator F. R. Vollert Date 4/18/95

Checker Hasan H. Tsiah Date 6-30-95

MEMBERS (3) AND (3) TO (5) BOTTOM ENDS

Frame LIFTING

JOINT SKETCH:

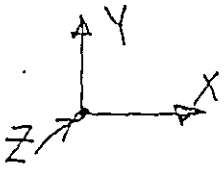

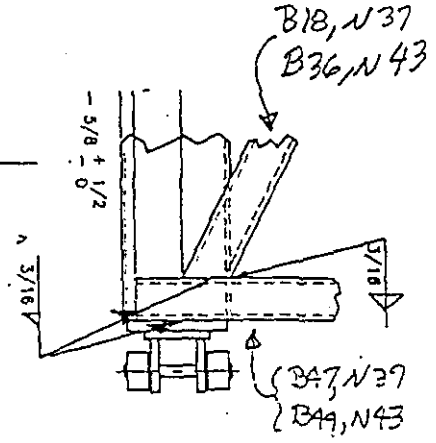

MAXIMUM FORCES

(DEADWEIGHT)

B18/B36 – $M_x = 423$ IN LB, $M_z = 585$ IN-LB

B47/B49 – $M_y = 180$ IN-LB, $M_z = 1101$ IN LB

(TRANSPORTATION)

B18/B36 – $M_x = 1151$ IN LB, $M_y = 555$ IN LB, $M_z = 225$ IN LB

B47/B49 – $M_x = 1490$ IN LB, $M_y = 1110$ IN LB, $M_z = 525$ IN LB

WELD JOINTS

(B47/B49)

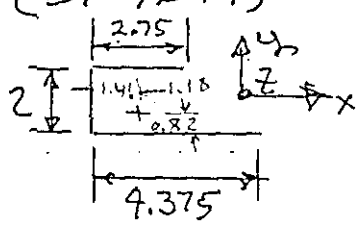

$L_w = 9.125$

$$\bar{y} = \frac{2 \times 1 + 2.75 \times 2}{9.125} = 0.82 \text{ IN}$$

$$\bar{x} = \left(\frac{2.75^2}{2} + \frac{4.375^2}{2}\right) \times \frac{1}{9.125} = 1.46 \text{ IN}$$

$$I_x = \frac{2^3}{12} + 2 \times 0.18^2 + 4.375 \times 0.82^2 + 2.75 \times 1.18^2 = 7.50 \text{ IN}^3$$

$$I_y = \frac{2.75^3}{12} + \frac{4.375^3}{12} + 2 \times 1.46^2 + 4.375 \times 0.73^2 + 2.75 \times 0.085^2 = 15.32$$

$J_w = 22.82 \text{ IN}^3$, $r' = \sqrt{0.82^2 + 2.92^2} = 3.03$ IN

B-40

BD-6400-060.1 (07/93)

ANALYTICAL CALCULATIONS

Subject SRLF WELD JOINT STRESS ANALYSES, TRUCKS 3 & 4

Originator F.P. VOLLERT Date 4/18/95

Checker Hassan H. Zaida Date 6-30-95

③ AND ③ TO ⑤ CONTINUED

(WELDS CONTD)

B18 / B36

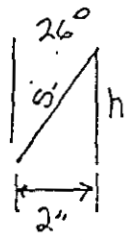

$S = \frac{2}{\cos 64^\circ} = 4.56$ IN

$h = 5 \sin 64^\circ = 4.10$ IN

$\bar{y} = \frac{h}{2} = 2.05$ IN

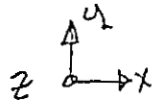

$\bar{x} = \frac{S \times 1}{S + h} = 0.53$ IN

$I_x = \frac{2 \times 4.10^3}{12} = 11.49$ IN^3

$I_y = \frac{2^3}{12} + h \times 0.53^2 = 1.82$ IN^3

(ALSO END WELDED ON 3 EDGES)

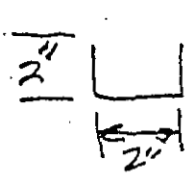

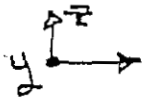

$\bar{z} = \frac{4}{6} = 0.67$ IN

$I_x = \frac{2 \times 2^3}{12} + 2 \times 0.67^2 + 2 \times 2 \times 0.33^2 = 2.67$ IN^3

$I_z = \frac{2^3}{12} + 2 \times 2 \times 1 = 4.67$ IN^3

(IT IS SAFE TO PRESUME)

⋀ WELD RESISTS M_x AND M_y

AND

⊔ END WELD RESISTS M_z

B-41

BD-6400-060.1 (07/93)

ANALYTICAL CALCULATIONS

Subject SALEWELD JOINT STRESS ANALYSES, TRUCKS 3 & 4
Originator F.R. VOLKERT Date 4/19/95
Checker Hassan H. Zuida Date 6-30-95

③ AND ③ TO ⑤ CONTINUED

WELD STRESSES

B47/B49

(DEADWEIGHT)

BENDING $F_{w,B} = \frac{M_y \times 2.92}{I_y} = \frac{180 \times 2.92}{15.32} = 34$ LB/IN

SHEAR $F_{w,S} = \frac{M_z}{J_w} r' = \frac{1101 \times 3.03}{22.87} = 146$ LB/IN

$\sqrt{\Sigma F_w^2} = \sqrt{34^2 + 146^2} = 150$ LB/IN OK

(TRANSPORTATION)

BENDING $F_{w,B} = \frac{M_x}{I_x} \times 1.18 + \frac{M_y \times 2.92}{I_y} = \frac{1490 \times 1.18}{7.5} + \frac{1110 \times 2.92}{15.32}$

$F_{w,B} = 446$ LB/IN

SHEAR $F_{w,S}$ DUE TO M_z BY PROPORTION

$F_{w,S} = \frac{525}{1101} \times 146 = 69$ LB/IN

$\sqrt{\Sigma F_w^2} = \sqrt{446^2 + 69^2} = 451$ LB/IN < 2775 LB/IN ALLOWABLE

B18/B36

(DEADWEIGHT)

$F_{w,1} = \frac{M_x \times 2.05}{I_x} = \frac{423 \times 2.05}{11.49} = 75$ LB/IN OK (A)

AND $F_{w,2} = \frac{M_z}{I_z} \times 1 = \frac{585}{4.67} = 125$ LB/IN OK (U)

(TRANSPORTATION)

$F_{w,1} = \frac{M_x \times 2.05}{11.49} + \frac{M_y}{I_y} \times 1.49 = \frac{1151 \times 2.05}{11.49} + \frac{555 \times 1.49}{1.82} = 654$ LB/IN, OK (A)

$F_{w,2} = \frac{M_z \times 1}{4.67} = \frac{225}{4.67} = 48$ LB/IN OK (U)

B-42

BD-6400-060.1 (07/93)

DESIGN CALCULATION

(1) Drawing H-2-690044 (2) Doc. No. _____ (3) Page 41 of 621
(4) Building N/A (5) Rev. _____ (6) Job No. _____
(7) Subject Core Sampler Truck Nos. 3 & 4 Shielded Receiver Lifting Frame Assembly
(8) Originator F.R. Vollert Date 4/4/95
(9) Checker Hassan H. Zeile Date 6-30-95

DEAD WEIGHT ANALYSIS
(Ref. Drawings H-2-690043 and 690044 Sh. 1 & 2)

WELD JOINT FORCES: GLOBAL COORDINATES

MEMBERS 6 TO 9 Frame FIXED

JOINT SKETCH:

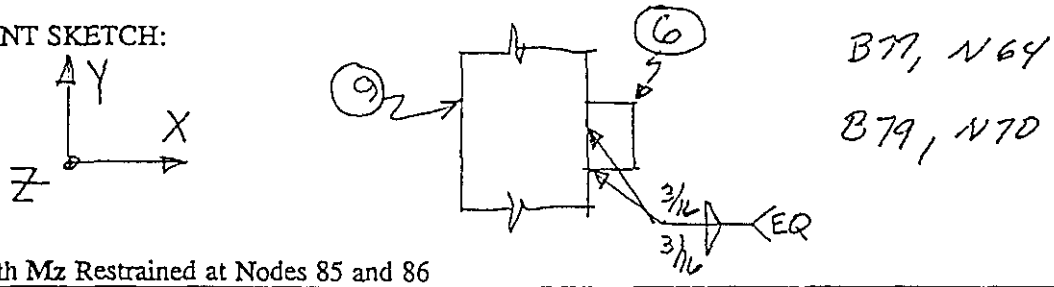

With Mz Restrained at Nodes 85 and 86

Moveable Frame Position	Beam and Node Numbers	Fx lbs	Fy lbs	Fz lbs	Mx in-lbs	My in-lbs	Mz in-lbs
UP	B77, N64	36	189	88	497	337	171
	B79, N70	35	188	88	497	337	169
DOWN	B77, N64	40	207	20	697	25	118
	B79, N70	40	206	20	696	24	117

Without Mz Restrained at Nodes 85 and 86

Moveable Frame Position	Beam and Node Numbers	Fx lbs	Fy lbs	Fz lbs	Mx in-lbs	My in-lbs	Mz in-lbs
UP	B77, N64	71	351	87	999	331	68
	B79, N70	70	350	87	999	331	67
DOWN	B77, N64	71	352	29	1135	54	31
	B79, N70	71	351	29	1135	54	30

B-43

DESIGN CALCULATION

(1) Drawing H-2-690044 (2) Doc. No. _____ (3) Page 42 of 62
(4) Building N/A (5) Rev. _____ (6) Job No. _____
(7) Subject Core Sampler Truck Nos. 3 & 4 Shielded Receiver Lifting Frame Assembly
(8) Originator F. R. VOLLERT Date 4/6/95
(9) Checker Hasan H. Tuda Date 6-30-95

TRANSPORT LOADS ANALYSIS
(Ref. Drawings H-2-690043 and 690044 Sh. 1 & 2)

WELD JOINT FORCES: (Moveable Frame in Down Position)

MEMBERS 6 TO 9 Frame FIXED

JOINT SKETCH: GLOBAL COORDS

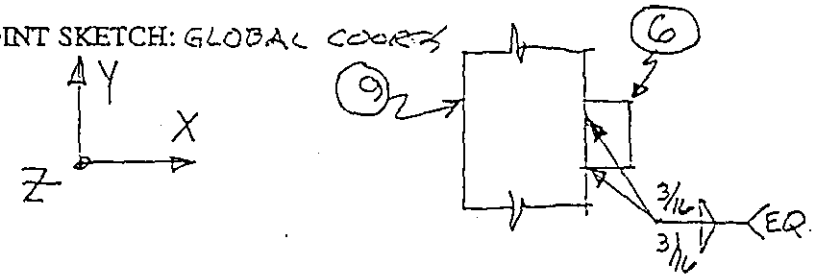

B77, N64
B79, N70

With Mz Restrained at Nodes 85 and 86

Longitudinal Load Direction	Beam and Node Numbers	Fx lbs	Fy lbs	Fz lbs	Mx in-lbs	My in-lbs	Mz in-lbs
FORWARD	B77, N64	209	1438	515	12750	2660	932
	B79, N70	197	662	299	3725	2218	71
AFT	B77, N64	283	1327	582	970	1101	636
	B79, N70	268	1665	380	10680	703	172

Without Mz Restrained at Nodes 85 and 86

Longitudinal Load Direction	Beam and Node Numbers	Fx lbs	Fy lbs	Fz lbs	Mx in-lbs	My in-lbs	Mz in-lbs
FORWARD	B77, N64	476	2663	812	17530	3859	1824
	B79, N70	502	2138	599	3279	3437	794
AFT	B77, N64	670	3116	681	6210	1427	3944
	B79, N70	628	3352	485	15940	1057	1254

B-44

ANALYTICAL CALCULATIONS

Page 43 of 62

Subject SRLE WELD JOINT STRESS ANALYSES, TRUCKS 3+4

Originator F.R. Vollert Date 4/18/95

Checker Hassan H. Trinh Date 6-30-95

MEMBERS (6) TO (9) Frame FIXED

JOINT SKETCH:

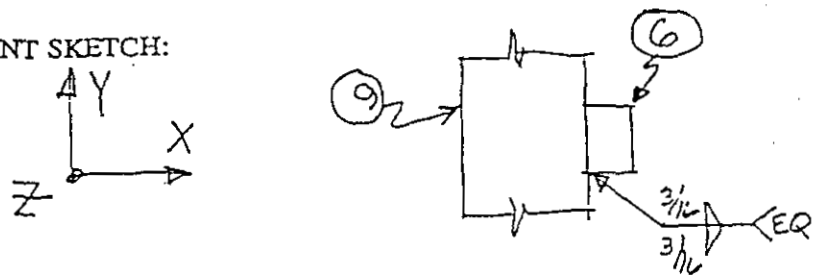

B77, N64

B79, N70

MAXIMUM FORCES

(DEADWEIGHT) $M_x = 1135$ IN-LB

(TRANSPORTATION) $M_x = 17530$ IN LB, $M_y = 3859$ IN LB

$M_z = 1824$ IN LB, $F_y = 2663$ LB

WELD JOINT

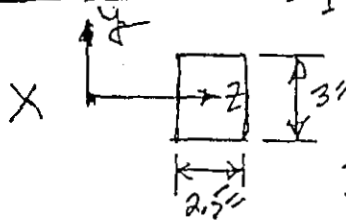

$I_y = \frac{2\times2.5^3}{12} + 2\times3(1.25)^2 = 11.98\ IN^3$

$S_y = \frac{11.98}{1.25} = 9.58\ IN^2$

$I_z = \frac{2\times3^3}{12} + 2\times2.5(1.5)^2 = 15.75\ IN^3$

$S_z = 15.75/1.5^2 = 10.50\ IN^2$

$J_w = 27.73\ IN^3$, $r' = \sqrt{1.25^2+1.5^2} = 1.95$

WELD STRESSES

(DEADWEIGHT) $F_w = \frac{M_x r'}{J_w} = \frac{1135\times1.95}{27.73} = 80$ LB/IN OK

(TRANSPORTATION)

SHEAR, $F_{w,S} = \frac{F_y}{L_w} = \frac{2663}{11} = 242$ LB/IN

TORSION SHEAR $F_{w,T} = \frac{M_x r'}{J_w} = \frac{17530\times1.95}{27.73} = 1233$ LB/IN

$F_{w,T} + F_{w,S} = 1475$ LB/IN

BENDING $F_{w,B} = \frac{M_y}{S_y} + \frac{M_z}{S_z} = \frac{3859}{9.58} + \frac{1824}{10.50} = 577$ LB/IN

$SRF_w = \sqrt{1475^2+577^2} = 1584$ LB/IN < 2775 LB/IN ALLOWED

B-45

BD-8400-060.1 (07/93)

DESIGN CALCULATION

(1) Drawing H-2-690044 (2) Doc. No. _____ (3) Page 94 of 62
(4) Building N/A (5) Rev. _____ (6) Job No. _____
(7) Subject Core Sampler Truck Nos. 3 & 4 Shielded Receiver Lifting Frame Assembly
(8) Originator E.P. Vaughn Date 4/3/95
(9) Checker Hassan H. Zaidi Date 6-30-95

DEAD WEIGHT ANALYSIS GLOBAL COORDINATES
(Ref. Drawings H-2-690043 and 690044 Sh. 1 & 2)

WELD JOINT FORCES:

MEMBERS 9 TO 7 Frame FIXED

JOINT SKETCH:

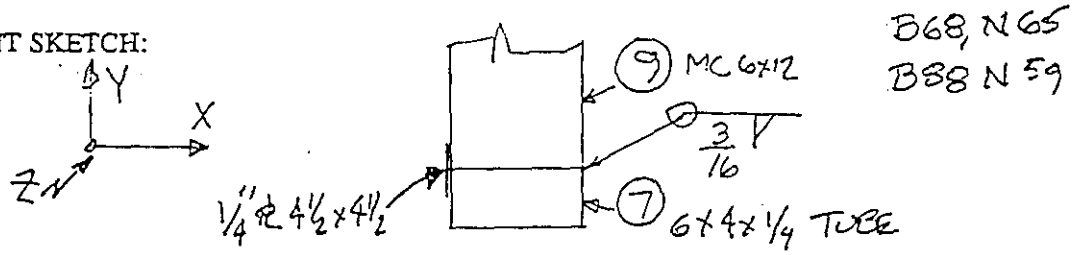

With Mz Restrained at Nodes 85 and 86

Moveable Frame Position	Beam and Node Numbers	Fx lbs	Fy lbs	Fz lbs	Mx in-lbs	My in-lbs	Mz in-lbs
UP	B68, N65	35	121	12	6	13	2346
	B88, N59	36	122	12	4	13	2353
DOWN	B68, N65	40	140	90	348	57	2100
	B88, N59	40	140	90	349	57	2104

Without Mz Restrained at Nodes 85 and 86

Moveable Frame Position	Beam and Node Numbers	Fx lbs	Fy lbs	Fz lbs	Mx in-lbs	My in-lbs	Mz in-lbs
UP	B68, N65	70	284	22	28	18	139
	B88, N59	71	285	22	30	19	143
DOWN	B68, N65	71	284	86	402	62	141
	B88, N59	71	285	86	403	62	143

B-46

DESIGN CALCULATION

(1) Drawing H-2-690044 (2) Doc. No. _____ (3) Page 45 of 62
(4) Building N/A (5) Rev. _____ (6) Job No. _____
(7) Subject Core Sampler Truck Nos. 3 & 4 Shielded Receiver Lifting Frame Assembly
(8) Originator F.R. Vaught Date 4/5/95
(9) Checker Hasan H. Zeik Date 6-30-95

TRANSPORT LOADS ANALYSIS
(Ref. Drawings H-2-690043 and 690044 Sh. 1 & 2)

WELD JOINT FORCES: (Moveable Frame in Down Position)

MEMBERS (9) TO (7) Frame FIXED

JOINT SKETCH: GLOBAL COORDINATES

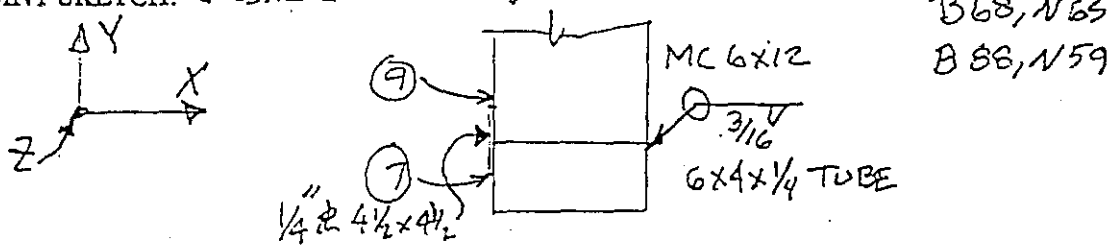

With Mz Restrained at Nodes 85 and 86

Longitudinal Load Direction	Beam and Node Numbers	Fx lbs	Fy lbs	Fz lbs	Mx in-lbs	My in-lbs	Mz in-lbs
FORWARD	B68, N65	729	741	291	9119	173	23520
	B88, N59	365	1516	783	10210	116	11700
AFT	B68, N65	304	1586	405	8192	94	18260
	B88, N59	642	1248	682	12510	44	28490

Without Mz Restrained at Nodes 85 and 86

Longitudinal Load Direction	Beam and Node Numbers	Fx lbs	Fy lbs	Fz lbs	Mx in-lbs	My in-lbs	Mz in-lbs
FORWARD	B68, N65	424	2217	291	10610	151	3889
	B88, N59	96	2742	784	9803	106	4982
AFT	B68, N65	55	3274	509	7900	156	4158
	B88, N59	256	3038	583	13080	113	3702

B-47

ANALYTICAL CALCULATIONS

Page 46 of 62

Subject SRLF WELD JOINT STRESS ANALYSES, TRUCKS 3 & 4

Originator F.R. VOLLERT Date 4/14/95

Checker Hans H. Zirk Date 6-30-95

MEMBERS (9) TO (7) Frame FIXED

JOINT SKETCH:

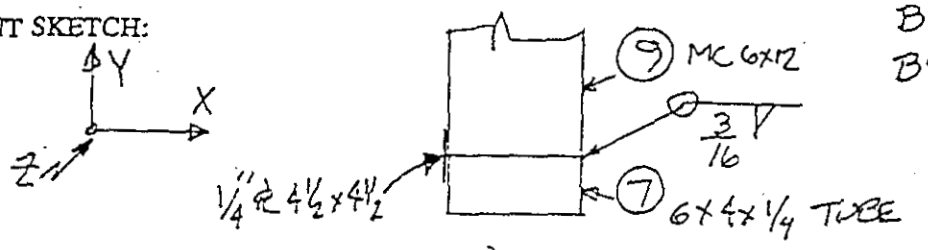

B68, N65
B88 N59

(MAXIMUM WELD FORCES)

DEADWEIGHT: $M_X = 349$ IN LB, $M_Z = 2104$ IN LB

TRANSPORTATION: $M_X = 12510$ IN LB, $M_Z = 28490$ IN LB

WITHOUT 4 1/2 X 4 1/2 X 1/4 GUSSET PL THIS JOINT IS 3/16" FILLET AROUND THE END OF THE MC 6X12

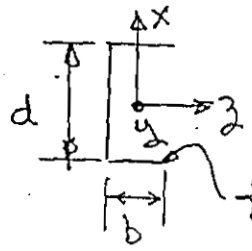

$b = 2.5$, $d = 6.0$, $S_Z = 21.0\ IN^2$

$S_X = 3.55\ IN^2$

DOUBLE 3/16" FILLET, ALLOWABLE IS 2X2775 LB/IN = 5550 LB/IN

WELD STRESS, DEADWEIGHT:

$$F_W = \frac{M_X}{S_X} + \frac{M_Z}{S_Z} = \frac{349}{3.55} + \frac{2104}{21.0} = 199\ LB/IN$$

$F_W \ll 2X2700$ LB/IN ALLOWABLE

WELD STRESS, TRANSPORTATION:

$$F_W = \frac{M_X}{S_X} + \frac{M_Z}{S_Z} = \frac{12510}{3.55} + \frac{28490}{21.0} = 4881\ LB/IN$$

$F_W < 5550$ LB/IN ALLOWABLE

B-48

BO-6400-060.1 (07/93)

DESIGN CALCULATION

(1) Drawing H-2-690044 (2) Doc. No. _____ (3) Page 47 of 62
(4) Building N/A (5) Rev. _____ (6) Job No. _____
(7) Subject Core Sampler Truck Nos. 3 & 4 Shielded Receiver Lifting Frame Assembly
(8) Originator E.A. Voulert Date 6/2/95
(9) Checker Hassan H. Zaidi Date 6-30-95

DEAD WEIGHT ANALYSIS
(Ref. Drawings H-2-690043 and 690044 Sh. 1 & 2)

WELD JOINT FORCES: GLOBAL COORDINATES

MEMBERS (7) TO C5x9 ON R16 Frame FIXED

JOINT SKETCH:

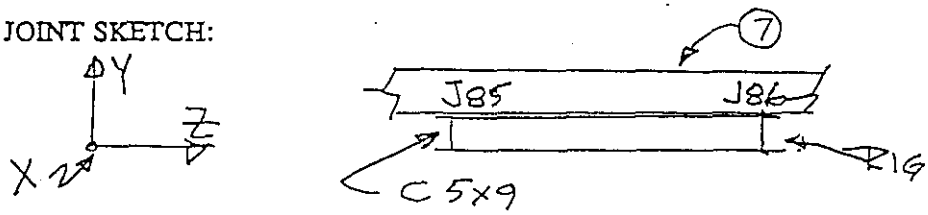

With Mz Restrained at Nodes 85 and 86

Moveable Frame Position	Beam and Node Numbers	Fx lbs	Fy lbs	Fz lbs	Mx in-lbs	My in-lbs	Mz in-lbs
UP	J85	36	91	472	0	0	2281
	J86	35	89	472	0	0	2275
DOWN	J85	40	109	479	0	0	2024
	J86	40	108	479	0	0	2020

Without Mz Restrained at Nodes 85 and 86

Moveable Frame Position	Beam and Node Numbers	Fx lbs	Fy lbs	Fz lbs	Mx in-lbs	My in-lbs	Mz in-lbs
UP	J85	71	253	1119	0	0	0
	J86	70	251	1119	0	0	0
DOWN	J85	71	253	1048	0	0	0
	J86	71	252	1048	0	0	0

B-49

DESIGN CALCULATION

(1) Drawing H-2-690044 (2) Doc. No. _____ (3) Page 48 of 62
(4) Building N/A (5) Rev. _____ (6) Job No. _____
(7) Subject Core Sampler Truck Nos. 3 & 4 Shielded Receiver Lifting Frame Assembly
(8) Originator F.R. VOLLERT Date 4/7/95
(9) Checker Hasan H. Zik Date 6-30-95

TRANSPORT LOADS ANALYSIS
(Ref. Drawings H-2-690043 and 690044 Sh. 1 & 2)

WELD JOINT FORCES: (Moveable Frame in Down Position)

MEMBERS (7) TO C5X9 ON RIG Frame FIXED

JOINT SKETCH: GLOBAL COORDINATES

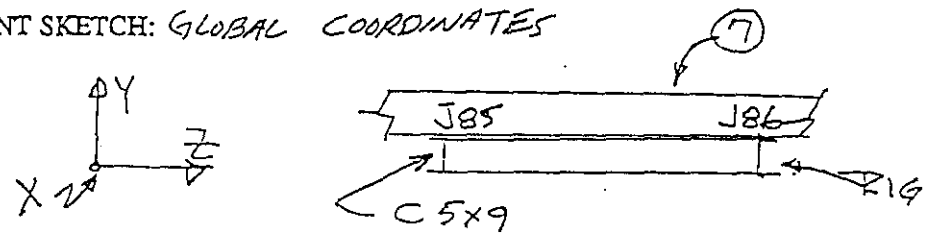

With Mz Restrained at Nodes 85 and 86

Longitudinal Load Direction	Beam and Node Numbers	Fx lbs	Fy lbs	Fz lbs	Mx in-lbs	My in-lbs	Mz in-lbs
FORWARD	J85	161	300	4136	0	0	12040
	J86	960	668	5233	0	0	25830
AFT	J85	857	37	5692	0	0	30200
	J86	116	2796	4582	0	0	18500

Without Mz Restrained at Nodes 85 and 86

Longitudinal Load Direction	Beam and Node Numbers	Fx lbs	Fy lbs	Fz lbs	Mx in-lbs	My in-lbs	Mz in-lbs
FORWARD	J85	87	4124	9340	0	0	0
	J86	634	910	10490	0	0	0
AFT	J85	456	1801	12600	0	0	0
	J86	228	4936	11480	0	0	0

B-50

ANALYTICAL CALCULATIONS

Page 49 of 62

Subject SRLF WELD JOINT STRESS ANALYSES, TRUCKS 3+4

Originator E. R. Volkert Date 4/18/95

Checker Hassan H. Tarik Date 6-30-95

MEMBERS (7) TO C5x9 ON RIG Frame FIXED

JOINT SKETCH:

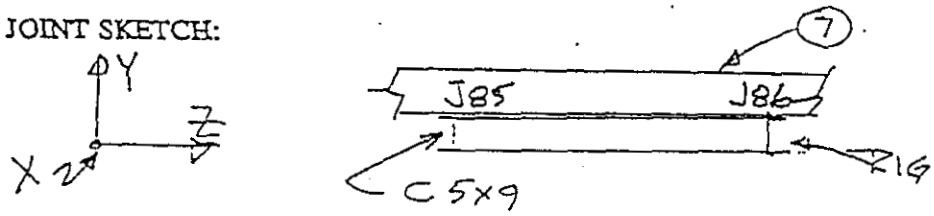

MAXIMUM FORCES

(DEADWEIGHT) $M_z = 2275$ IN LB

(TRANSPORTATION) $M_z = 30200$ IN LB

NOTE: THIS WELD PROVIDES LITTLE M_z RESISTANCE

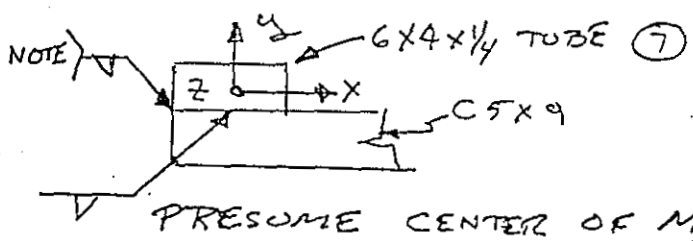

PRESUME CENTER OF M_z ROTATION AT ℄ (7)

$$J_z = \frac{6^3}{12} + 6 \times 2^2 = 42 \text{ IN}^3, \quad r' = \sqrt{3^2 + 2^2} = 3.60 \text{ IN}$$

WELD STRESSES

(DEADWEIGHT) $F_w = \frac{M_z r'}{J_z} = \frac{2275 \times 3.60}{42} = 195 \frac{\text{LB}}{\text{IN}}$ OK

(TRANSPORTATION)

$$F_w = \frac{M_z r'}{J_w} = \frac{30200 \times 3.60}{42} = 2589 \text{ LB/IN}$$

$F_w = 2589$ LB/IN < 2975 LB/IN ALLOWABLE

B-51

BD-6400-060.1 (07/93)

DESIGN CALCULATION

(1) Drawing H-2-690044 (2) Doc. No. _____ (3) Page 50 of 62
(4) Building N/A (5) Rev. _____ (6) Job No. _____
(7) Subject Core Sampler Truck Nos. 3 & 4 Shielded Receiver Lifting Frame Assembly
(8) Originator F.R. VOLLERT Date 4/4/95
(9) Checker Hasan H. Zida Date 6-30-95

DEAD WEIGHT ANALYSIS
(Ref. Drawings H-2-690043 and 690044 Sh. 1 & 2)

WELD JOINT FORCES: GLOBAL COORDINATES

MEMBERS (3) TO (6) Frame FIXED

JOINT SKETCH:

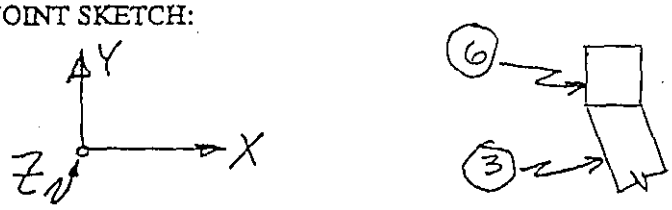

B80, N77
B82, N80

With Mz Restrained at Nodes 85 and 86

Moveable Frame Position	Beam and Node Numbers	Fx lbs	Fy lbs	Fz lbs	Mx in-lbs	My in-lbs	Mz in-lbs
UP	B80, N77	36	203	13	384	126	170
	B82, N80	35	202	13	383	126	170
DOWN	B80, N77	40	222	12	358	91	118
	B82, N80	40	221	12	357	90	118

Without Mz Restrained at Nodes 85 and 86

Moveable Frame Position	Beam and Node Numbers	Fx lbs	Fy lbs	Fz lbs	Mx in-lbs	My in-lbs	Mz in-lbs
UP	B80, N77	71	366	23	677	198	68
	B82, N80	70	364	23	676	197	67
DOWN	B80, N77	71	366	21	623	159	30
	B82, N80	71	365	21	622	158	30

B-52

DESIGN CALCULATION

(1) Drawing H-2-690044 (2) Doc. No. _____ (3) Page 51 of 62
(4) Building N/A (5) Rev. _____ (6) Job No. _____
(7) Subject Core Sampler Truck Nos. 3 & 4 Shielded Receiver Lifting Frame Assembly
(8) Originator F.R. Voelert Date 4/6/95
(9) Checker Hasan H. Zuda Date 6-30-95

TRANSPORT LOADS ANALYSIS

(Ref. Drawings H-2-690043 and 690044 Sh. 1 & 2)

WELD JOINT FORCES: (Moveable Frame in Down Position)

MEMBERS 3 TO 6 Frame FIXED

JOINT SKETCH: GLOBAL COORDINATES

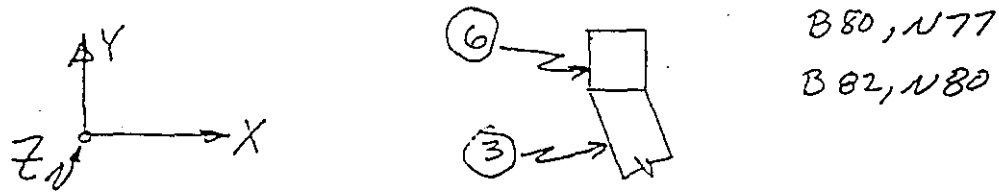

With Mz Restrained at Nodes 85 and 86

Longitudinal Load Direction	Beam and Node Numbers	Fx lbs	Fy lbs	Fz lbs	Mx in-lbs	My in-lbs	Mz in-lbs
FORWARD	B80, N77	183	920	160	4364	399	384
	B82, N80	233	1146	66	1618	225	477
AFT	B80, N77	326	1739	24	473	372	190
	B82, N80	238	1287	189	5280	1012	275

Without Mz Restrained at Nodes 85 and 86

Longitudinal Load Direction	Beam and Node Numbers	Fx lbs	Fy lbs	Fz lbs	Mx in-lbs	My in-lbs	Mz in-lbs
FORWARD	B80, N77	446	2150	225	6252	731	1208
	B82, N80	544	2618	1	271	213	1410
AFT	B80, N77	714	3550	85	2799	1257	919
	B82, N80	596	2953	292	8404	1768	729

B-53

ANALYTICAL CALCULATIONS

Page 52 of 62

Subject SRLF WELD JOINT STRESS ANALYSES, TRUCKS 3-6

Originator F.R. Vollert Date 4/18/05

Checker Hassan H. Zaidi Date 6-30-05

MEMBERS (3) TO (6) Frame FIXED

JOINT SKETCH:

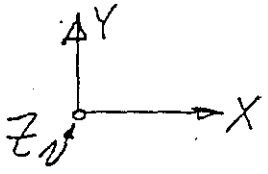

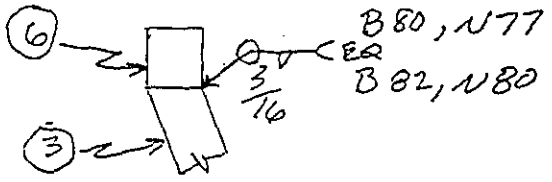

MAXIMUM FORCES

(DEADWEIGHT) $F_y = 366$ LB, $M_x = 677$ IN-LB

(TRANSPORTATION) $F_y = 2953$, $M_x = 8404$, $M_y = 1768$

(WELD JOINT)

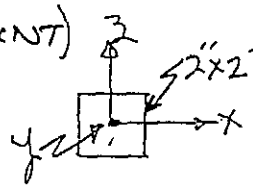

$S_x = S_z = 5.33$ IN^2

$J_w = 10.66$ IN^3, $r' = \sqrt{2}$

$L_w = 8$ IN

WELD STRESSES

(DEADWEIGHT) $F_w = \frac{F_y}{L_w} + \frac{M_x}{S_x} = \frac{366}{8} + \frac{677}{5.33} = 173$ LB/IN OK

(TRANSPORTATION)

$F_w = \frac{F_y}{L_w} + \frac{M_x}{S_x} + \frac{M_y}{S_y} = \frac{2953}{8} + \frac{8404}{5.33} + \frac{1768}{5.33} = 2278$ LB/IN

< 2755 LB/IN

B-54

BD-6400-060.1 (07/93)

DESIGN CALCULATION

(1) Drawing H-2-690044 (2) Doc. No. _____ (3) Page 53 of 62
(4) Building N/A (5) Rev. _____ (6) Job No. _____
(7) Subject Core Sampler Truck Nos. 3 & 4 Shielded Receiver Lifting Frame Assembly
(8) Originator F.R. VOLLERT Date 4/9/95
(9) Checker Harry H. Zirk Date 6-30-95

DEAD WEIGHT ANALYSIS
(Ref. Drawings H-2-690043 and 690044 Sh. 1 & 2)

WELD JOINT FORCES: LOCAL COORDINATES

MEMBERS (3) TO (B) BRACE LOWER END Frame FIXED

JOINT SKETCH:

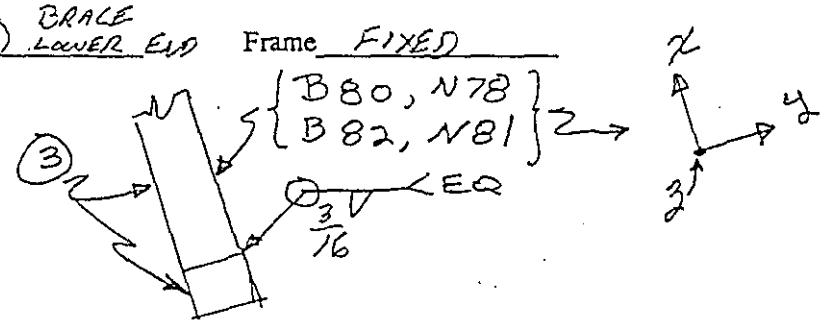

With Mz Restrained at Nodes 85 and 86

Moveable Frame Position	Beam and Node Numbers	Fx lbs	Fy lbs	Fz lbs	Mx in-lbs	My in-lbs	Mz in-lbs
UP	B80, N78	229	4	13	58	282	69
	B82, N81	228	4	13	58	281	69
DOWN	B80, N78	248	2	12	28	280	93
	B82, N81	248	2	12	29	280	93

Without Mz Restrained at Nodes 85 and 86

Moveable Frame Position	Beam and Node Numbers	Fx lbs	Fy lbs	Fz lbs	Mx in-lbs	My in-lbs	Mz in-lbs
UP	B80, N78	396	2	23	78	491	304
	B82, N81	394	2	23	78	490	304
DOWN	B80, N78	396	3	21	49	468	300
	B82, N81	395	3	21	49	467	300

B-55

DESIGN CALCULATION

(1) Drawing H-2-690044 (2) Doc. No. _____ (3) Page 54 of 62
(4) Building N/A (5) Rev. _____ (6) Job No. _____
(7) Subject Core Sampler Truck Nos. 3 & 4 Shielded Receiver Lifting Frame Assembly
(8) Originator E. R. Vollert Date 4/6/95
(9) Checker Hasan H. Tuli Date 6-20-95

TRANSPORT LOADS ANALYSIS
(Ref. Drawings H-2-690043 and 690044 Sh. 1 & 2)

WELD JOINT FORCES: (Moveable Frame in Down Position)

MEMBERS 3 TO 3 BRACE LOWER END Frame FIXED

JOINT SKETCH:
LOCAL COORDINATES

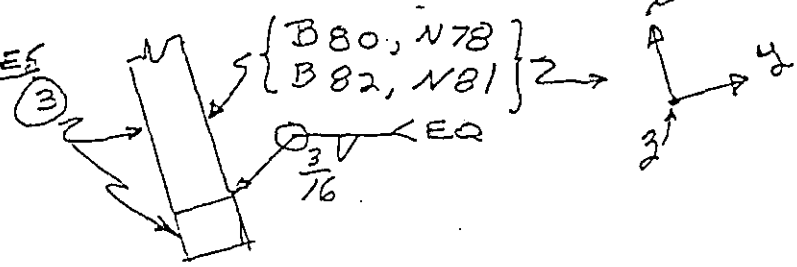

With Mz Restrained at Nodes 85 and 86

Longitudinal Load Direction	Beam and Node Numbers	Fx lbs	Fy lbs	Fz lbs	Mx in-lbs	My in-lbs	Mz in-lbs
FORWARD	B80,N78	912	37	169	358	4235	1146
	B82,N81	1143	47	74	56	2033	1616
AFT	B80,N78	1798	27	33	448	1079	1466
	B82,N81	1338	18	198	88	4735	1075

Without Mz Restrained at Nodes 85 and 86

Longitudinal Load Direction	Beam and Node Numbers	Fx lbs	Fy lbs	Fz lbs	Mx in-lbs	My in-lbs	Mz in-lbs
FORWARD	B80,N78	2169	84	234	356	5706	2824
	B82,N81	2647	100	8	163	478	3430
AFT	B80,N78	3649	97	74	756	1253	4033
	B82,N81	3040	83	301	295	6924	3503

B-56

ANALYTICAL CALCULATIONS

Subject SRLF WELD JOINT STRESS ANALYSES, TRUCKS 3 & 4

Originator F. R. VOLLERT Date 4/18/95

Checker Hasan H. Zeik Date 6-30-95

LOCAL COORDINATES

MEMBERS (3) TO (3) BRACE LOWER END Frame FIXED

JOINT SKETCH:

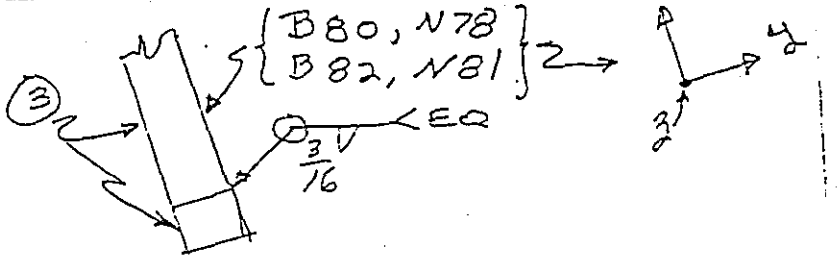

MAXIMUM FORCES

(DEADWEIGHT) $M_y = 468$ IN LB, $M_z = 300$ IN LB

(TRANSPORTATION) $F_x = 3040$ LB, $M_y = 6924$ IN LB

$M_z = 3503$ IN-LB

FOR WELD AROUND END OF 2x2x1/4 TUBE

$S_y = S_z = 5.33$ IN^2, $L_w = 4 \times 2 = 8$ IN

WELD STRESSES

FOR DEADWEIGHT: $F_w = \frac{M_y}{S_y} + \frac{M_z}{S_z} = \frac{468+300}{5.33} = 144$ LB/IN

OK

FOR TRANSPORTATION:

$F_w = \frac{F_x}{L_w} + \frac{M_y}{S_y} + \frac{M_z}{S_z} = \frac{3040}{8} + \frac{6924+3503}{5.33} = 2336$ LB/IN

$F_w = 2336$ LB/IN < 2775 LB/IN ALLOWABLE

B-57

BD-6400-060.1 (07/93)

DESIGN CALCULATION

(1) Drawing H-2-690044 (2) Doc. No. _____ (3) Page 56 of 62
(4) Building N/A (5) Rev. _____ (6) Job No. _____
(7) Subject Core Sampler Truck Nos. 3 & 4 Shielded Receiver Lifting Frame Assembly
(8) Originator F.R. Voelert Date 4/6/95
(9) Checker Hassan H. Tadi Date 6-30-95

DEAD WEIGHT ANALYSIS
(Ref. Drawings H-2-690043 and 690044 Sh. 1 & 2)

WELD JOINT FORCES: LOCAL COORDINATES

MEMBERS (3) WELDED TO C5x9 Frame FIXED
(ON RIG)

JOINT SKETCH:

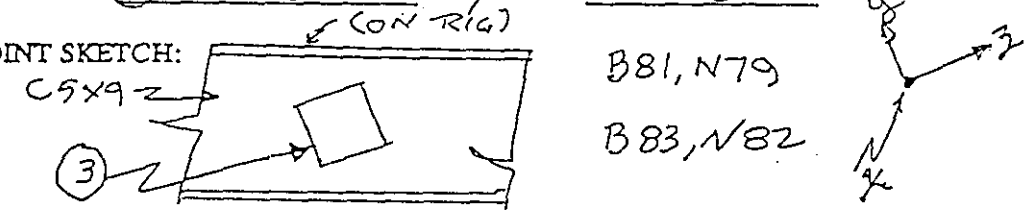

With Mz Restrained at Nodes 85 and 86

Moveable Frame Position	Beam and Node Numbers	Fx lbs	Fy lbs	Fz lbs	Mx in-lbs	My in-lbs	Mz in-lbs
UP	B81, N79	13	232	4	69	38	871
	B83, N82	13	230	4	69	37	866
DOWN	B81, N79	12	251	3	93	14	967
	B83, N82	12	250	3	93	14	964

Without Mz Restrained at Nodes 85 and 86

Moveable Frame Position	Beam and Node Numbers	Fx lbs	Fy lbs	Fz lbs	Mx in-lbs	My in-lbs	Mz in-lbs
UP	B81, N79	23	398	2	304	90	1493
	B83, N82	23	396	2	304	89	1487
DOWN	B81, N79	21	398	3	300	64	1518
	B83, N82	21	397	3	300	64	1514

B-58

DESIGN CALCULATION

(1) Drawing H-2-690044 (2) Doc. No. _____ (3) Page 57 of 62
(4) Building N/A (5) Rev. _____ (6) Job No. _____
(7) Subject Core Sampler Truck Nos. 3 & 4 Shielded Receiver Lifting Frame Assembly
(8) Originator F.R. Vincent Date 4/6/95
(9) Checker Hooan H. Tri Date 6-30-95

TRANSPORT LOADS ANALYSIS
(Ref. Drawings H-2-690043 and 690044 Sh. 1 & 2)

WELD JOINT FORCES: (Moveable Frame in Down Position)

MEMBERS (3) WELDED TO C5X9 Frame FIXED
LOCAL COORDINATES (ON RIG)
JOINT SKETCH:

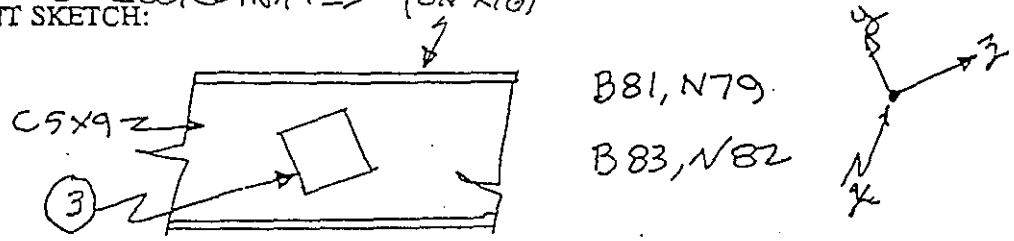

With Mz Restrained at Nodes 85 and 86

Longitudinal Load Direction	Beam and Node Numbers	Fx lbs	Fy lbs	Fz lbs	Mx in-lbs	My in-lbs	Mz in-lbs
FORWARD	B81, N79	170	910	36	1146	171	321
	B83, N82	75	1141	49	1616	297	7744
AFT	B81, N79	33	1801	28	1466	584	10070
	B83, N82	199	1341	18	1075	179	1963

Without Mz Restrained at Nodes 85 and 86

Longitudinal Load Direction	Beam and Node Numbers	Fx lbs	Fy lbs	Fz lbs	Mx in-lbs	My in-lbs	Mz in-lbs
FORWARD	B81, N79	234	2167	86	2824	70	5133
	B83, N82	9	2644	101	3430	666	13710
AFT	B81, N79	76	3652	98	4033	1244	17000
	B83, N82	302	3043	84	3503	714	8284

B-59

ANALYTICAL CALCULATIONS

Subject SRLF WELD JOINT STRESS ANALYSES, TRUCKS 3 & 4

Originator F.R. VOLLERT Date 4/25/95

Checker Hassan H. Zaid Date 6-30-95

MEMBERS (3) WELDED TO C5x9 Frame FIXED

JOINT SKETCH:

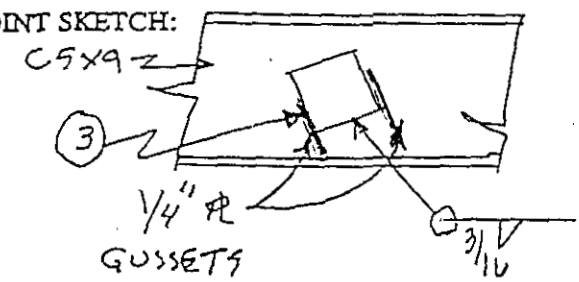

B81, N79

B83, N82

LOCAL COORDINATES

MAXIMUM WELD FORCES

(DEADWEIGHT:) $M_z = 1518$ IN LB

(TRANSPORTATION) $F_y = 3652$ LB, $M_x = 4033$ IN LB,
$M_y = 1244$ IN LB, $M_z = 17000$ IN LB

WELD TO TUBE AND GUSSETS:

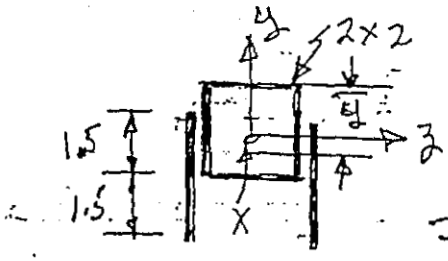

$\bar{y} = \frac{8 \times 1 + 2 \times 3 \times 2}{14} = 1.43$ IN

$I_z = 5.33 + 8 \times 0.43^2 + \frac{2 \times 3^3}{12} + 6 \times 0.57^2$

$I_z = 13.26$ IN^3

$S_z = \frac{13.26}{2.07} = 6.41$

$I_y = 5.33 + 2 \times 3 = 11.33$

$S_y = 11.33$

$J_w = 24.54$ IN^3

$r' = \sqrt{1^2 + 2.07^2} = 2.30$ IN

WELD STRESSES

(DEADWEIGHT)

$F_w = \frac{M_z}{S_z} = \frac{1518}{6.41} = 237$ LB/IN OK

B-60

BD-6400-060.1 (07/93)

ANALYTICAL CALCULATIONS

Page 59 of 62

Subject SRLF WELD JOINT STRESS ANALYSES, TRUCKS 3 & 4

Originator E.R. Volkert Date 4/26/95

Checker Hasan H. Zidan Date 6-30-95

(3) WELDED TO C 5x9 CONTINUED

WELD STRESSES, (TRANSPORTATION)

$$F_w = \frac{M_y}{S_y} + \frac{M_z}{S_z} = \frac{1244}{11.33} + \frac{17000}{6.41} = 2762 \text{ LB/IN}$$

$F_w \approx 2775$ LB/IN OK

GUSSET PL STRESSES

PLATES ACT WITH TUBES AS COMPOSITE SECTION.

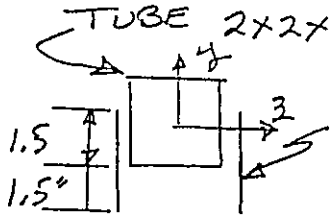

$$\bar{y} = \frac{0.25 \times 3 \times 2 \times 2 + 1.59 \times 1}{1.59 + 6 \times 0.25}$$

$\bar{y} = 1.49$ IN

$$I_z = 0.766 + 1.59 \times 0.49^2 + \frac{0.25 \times 3^3 \times 2}{12} + 6 \times 0.51^2$$

$I_z = 3.83 \text{ IN}^4$ $\quad S_z = \frac{I_z}{2.01} = 1.91 \text{ IN}^3$

$I_y = 0.766 + 2 \times 3 \times 1 = 6.766 \text{ IN}^4$

$S_y = 6.766 \text{ IN}^3$

(DEAD WEIGHT)

$$f = \frac{M_z}{S_z} = \frac{1518}{1.91} = 795 \text{ PSI OK}$$

(TRANSPORTATION)

$$f = \frac{M_y}{S_y} + \frac{M_z}{S_z} = \frac{1244}{6.766} + \frac{17000}{1.91} = 9084 \text{ PSI}$$

$f <$ 23760 PSI ALLOWABLE OK

B-61

BD-6400-060.1 (07/93)

ANALYTICAL CALCULATIONS

Subject SRLF WELD JOINT STRESS ANALYSES, TRUCKS 3 & 4

Originator F.R. VOLLERT Date 3/31/95

Checker Hassan H. Zeida Date 6-30-95

ACTUATOR SUPPORT H-2-690043

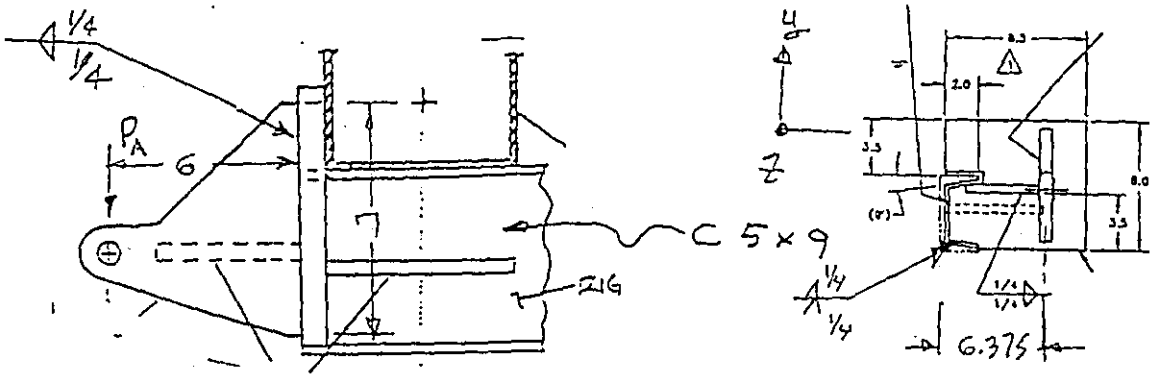

WITH AND WITHOUT M_Z RESTRAINT AT NODES 85 & 86

FRAME POSITION	DEADWEIGHT (P_A)	TRANSPORT (P_A) FWD	TRANSPORT (P_A) AFT
UP	1690	X	X
DOWN	1681	2531	2671

DEADWEIGHT ANALYSIS, WELD STRESSES

(90° WELD JOINT 7" LONG)

$F_y = P_A = 1690$ LB MAX

$M_Z = 6 \times P_A = 6 \times 1690 = 10140$ IN-LB

WELD SHEAR $F_{w,s} = \frac{3}{2} \times \frac{F_y}{7} = 362$ LB/IN

BENDING STRESS $F_{w,B} = \frac{M_Z}{S_E} = \frac{10140 \times 6}{7^2} = 1242$ LB/IN

$\sqrt{\Sigma F_w^2} = \sqrt{362^2 + 1242^2} = 1294$ LB/IN

OR $\frac{1294}{2} = 647$ LB/IN ON EACH 1/4" FILLET

647 LB/IN << 370.0 LB/IN ALLOWABLE

ANALYTICAL CALCULATIONS

Subject SRLE WELD JOINT STRESS ANALYSES, TRACKS 3+4

Originator E.R. VOLLERT Date 4/13/95

Checker Hans H. Zuber Date 6-30-95

ACTUATOR SUPPORT CONTINUED

(DEAD WEIGHT) WELD AT ℄ 5+9

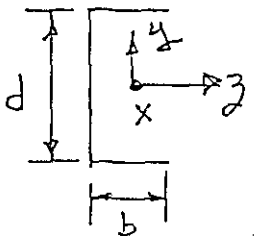

$b = 1.885$, $d = 5.0$, $\bar{z} = 0.478$

$S_z = 13.6\ in^2$, $J_\omega = 37\ in^3$, $r' = 2.87$

$F_y = P_A = 1690\ LB$ MAX

$M_z = F_y \times 6.75 = 11408\ IN\ LB$

(TORSION) $M_x = F_y \times (6.375 - \bar{z}) = 9966\ IN\ LB$

WELD STRESSES

(SHEAR), $F_{w,s} = \dfrac{F_y}{(2b+d)} = \dfrac{1690}{8.77} = 193\ LB/IN$

(TORSION SHEAR) $F_{w,T} = \dfrac{M_x r'}{J_\omega} = 773\ LB/IN$

$F_{w,s} + F_{w,T} = 966\ LB/IN$

(BENDING) $F_{w,B} = \dfrac{M_z}{S_z} = \dfrac{11408}{13.6} = 839\ LB/IN$

$\sqrt{\Sigma F_w^2} = \sqrt{966^2 + 839^2} = 1279\ LB/IN$

$1279\ LB/IN < 2755\ LB/IN$ ALLOWABLE FOR 3/16" FILLET EQUIVALENT

B-63

BD-6400-060.1 (07/93)

ANALYTICAL CALCULATIONS

Subject SRLF WELD JOINT STRESS ANALYSES, TRUCKS 3 & 4
Originator F.R. VOLLERT Date 4/19/95
Checker Hassan H. Zuda Date 6-30-95

ACTUATOR SUPPORT CONTINUED

TRANSPORTATION LOAD ANALYSIS, WELD STRESSES (90° WELD JOINT)

$F_y = 2671$ LB (MAX)

BY PROPORTION: SHEAR $F_{w,s} = \frac{2671}{1690} \times 362 = 572 \frac{LB}{IN}$

AND BENDING $F_{w,B} = \frac{2671}{1690} \times 1242 = 1963$ LB/IN

$\sqrt{\Sigma F_w^2} = \sqrt{572^2 + 1963^2} = 2045$ LB/IN OR:

$\frac{2045}{2} = 1023$ LB/IN ON EACH 1/4" FILLET

1023 LB/IN << 3700 LB/IN ALLOWABLE

(WELD AT C 5x9)

(SHEAR) $F_{w,s} = \frac{2671}{1690} \times 193 = 305$ LB/IN

(TORSION SHEAR) $F_{w,T} = \frac{2671}{1690} \times 773 = 1223$ LB/IN

$F_{w,s} + F_{w,T} = 1528$ LB/IN

(BENDING) $F_{w,B} = \frac{2671}{1690} \times 839 = 1326$ LB/IN

$\sqrt{\Sigma F_w^2} = \sqrt{1528^2 + 1326^2} = 2023$ LB/IN

3/16" FILLET EQUIV, ALLOWABLE = 2700 LB/IN IS REQUIRED FOR TRANSPORTATION LOAD

1/2" EQUIV WELD THICKNESS EXISTS, OK

B-64

BD-6400-060.1 (07/93)