INFORMATION CLEARANCE REVIEW AND RELEASE APPROVAL

Part I: Background Information

Title: Hanford Site River Protection Transuranic Tank Waste Identification and Planning for Retrieval, Treatment, and Eventual Disposal at WIPP	Information Category: ○ Abstract ○ Journal Article ○ Summary ○ Internet ○ Visual Aid ○ Software ◉ Full Paper ○ Report ○ Other
Document Number: RPP-27295-FP Rev. 0	Date: 1/12/06
Author: John Kristozfski	
Purpose of Document: Full Paper for WM06 meeting to present TRU Project Status	

Part II: External/Public Presentation Information

Conference Name: Waste Management 2006	
Sponsoring Organization(s): Department of Energy	
Date of Conference: Feb. 26-Mar 2, 2006	Conference Location: Tucson Arizona
Will Material be Handed Out? ○ Yes ◉ No	Will Information be Published? ◉ Yes ○ No (If Yes, attach copy of Conference format instructions/guidance.)

Part III: CH2M HILL Document Originator Checklist

Description	Yes	N/A	Signature
Information Product meets requirements in TFC-BSM-AD-C-01?	○	◉	
Document Release Criteria in TFC-ENG-DESIGN-C-25 completed? (Attach checklist)	○	◉	
If product contains pictures, Safety review completed?	○	◉	

Part IV: CH2M HILL Internal Review

Function	Organization	Date	Signature/Date
Subject Matter Expert	John Kristofzski	1/17/06	John Kristofzski 1/17/06
Responsible Manager	Joel Eacker	1/17/06	Joel Eacker 1/17/06
Other:			

Part V: IRM Clearance Services Review

Description	Yes	No	
Document contains Classified Information?	○	◉	If answer is "Yes," ADC approval required. Signature and Date
Document contains Information restricted by DOE Operational Security Guidelines?	○	◉	Reviewer Signature: Signature and Date
Document is subject to Release Restrictions? If answer is "Yes," please mark category at right and describe limitation or responsible organization below:	○	◉	Document contains: ☐ Applied Technology ☐ Protected CRADA ☐ Personal/Private ☐ Export Controlled ☐ Proprietary ☐ Procurement-Sensitive ☐ Patentable Info. ☐ Business-Sensitive ☐ Predecisional Info. ☐ UCNI ☐ Restricted by Operational Security Guidelines ☐ Other (Specify)
Additional Comments from Information Clearance Specialist Review?	○	◉	Information Clearance Specialist Approval: Janis Aardal 01/18/2006 J. D. Aardal Signature and Date

When IRM Clearance Review is Complete -- Return to CH2M HILL Originator for Final Signature Routing (Part VI) A-6003-508 (09/04)

INFORMATION CLEARANCE REVIEW AND RELEASE APPROVAL (Page 2)

Part VI: Final Review and Approvals

Organization/Function	Approved for Release Yes	Approved for Release N/A	Signature/Date
CH2M HILL Public Affairs	◉	O	Karen J. Cadey 1-17-06
CH2M HILL Office of Chief Counsel	◉	O	
DOE-ORP Public Affairs/Communications	◉	O	T. Eddy Dodds 1-17-06
Other: Steve Wiegman, DOE-ORP	◉	O	1-17-06
Other:	O	O	

Comments:

APPROVED FOR RELEASE OFFICIAL DOCUMENT Date 01/18/2006

Information Release Station Information

Was/Is Information Product approved for release? ◉ Yes O No

If Yes, what is the Level of Release? ◉ Public/Unrestricted O Other (Specify) _____

Date Information Product stamped/marked for Release: 01/18/2006

Was Information Product transferred to OSTI? O Yes O No

Date Information Product sent/mailed to OSTI: _____

Records Management Information

Ascension Number assigned to Information Product: _____

What is/are the ascension numbers associated with CH2M HILL internal processing documentation? _____

Forward Copies of Completed Form to CH2M HILL Originator and CH2M HILL CIO Office

Description	Yes	N/A	Applicable but not Available (Provide Explanation Below)
CH2M HILL Information Product	O	O	
Conference Paper Guidelines	O	O	
Trademark/Copyright "Right to Use" Information or Permission Documentation	O	O	
CH2M HILL Administrative Checklist	O	O	
CH2M HILL Technical Checklist	O	O	
	O	O	

RPP-27295-FP
Revision 0

Hanford Site River Protection Project Transuranic Tank Waste Identification and Planning for Retrieval, Treatment, and Eventual Disposal at WIPP

Prepared for the U.S. Department of Energy
Assistant Secretary for Environmental Management

Contractor for the U.S. Department of Energy
Office of River Protection under Contract DE-AC27-99RL14047

CH2MHILL
Hanford Group, Inc.

P.O. Box 1500
Richland, Washington

Approved for Public Release;
Further Dissemination Unlimited

RPP-27295-FP
Revision 0

Hanford Site River Protection Project Transuranic Tank Waste Identification and Planning for Retrieval, Treatment, and Eventual Disposal at WIPP

J. G. Kristofzski
M. J. Jennings
M. E. Johnson
A. R. Tedeschi
CH2M HILL Hanford Group, Inc.

D. L. Clark
Department of Energy - Office of River Protection

Date Published
January 2006

To Be Presented at
Waste Management 2006

Department of Energy
Tucson, Arizona

February 26 - March 2, 2006

Published In
Waste Management 2006 Symposium Proceedings

Prepared for the U.S. Department of Energy
Assistant Secretary for Environmental Management

Contractor for the U.S. Department of Energy
Office of River Protection under Contract DE-AC27-99RL14047

CH2MHILL
Hanford Group, Inc.
P.O. Box 1500
Richland, Washington

Copyright License
By acceptance of this article, the publisher and/or recipient acknowledges the U.S. Government's right to retain a nonexclusive, royalty-free license in and to any copyright covering this paper.

Approved for Public Release;
Further Dissemination Unlimited

J. D. Aardal 01/18/2006
Release Approval Date

LEGAL DISCLAIMER

This report was prepared as an account of work sponsored by an agency of the United States Government. Neither the United States Government nor any agency thereof, nor any of their employees, nor any of their contractors, subcontractors or their employees, makes any warranty, express or implied, or assumes any legal liability or responsibility for the accuracy, completeness, or any third party's use or the results of such use of any information, apparatus, product, or process disclosed, or represents that its use would not infringe privately owned rights. Reference herein to any specific commercial product, process, or service by trade name, trademark, manufacturer, or otherwise, does not necessarily constitute or imply its endorsement, recommendation, or favoring by the United States Government or any agency thereof or its contractors or subcontractors. The views and opinions of authors expressed herein do not necessarily state or reflect those of the United States Government or any agency thereof.

This document is available to the U.S. Department of Energy and its contractors, in paper from the Office of Scientific and Technical Information (OSTI). It is available for sale to the public from the National Technical Information Service (NTIS).

This report has been reproduced from the best available copy. Available in paper copy.

Printed in the United States of America

WM'06 Conference, February 26 - March 2, 2006, Tucson, AZ

Hanford Site River Protection Project
Transuranic Tank Waste Identification and Planning For Retrieval, Treatment, and Eventual Disposal at WIPP

John Kristofzski, Rick Tedeschi, Michael E. Johnson, Mike Jennings
CH2M HILL Hanford Group, Inc.
P.O. Box 1500, Richland, WA 99352

Diane Clark
Office of River Protection, Department of Energy
P.O. Box 450, Richland, WA 99352

ABSTRACT

The CH2M HILL Hanford Group, Inc. (CHG) conducts business to achieve the goals of the Office of River Protection (ORP) at Hanford. As an employee owned company, CHG employees have a strong motivation to develop innovative solutions to enhance project and company performance while ensuring protection of human health and the environment. CHG is responsible to manage and perform work required to safely store, enhance readiness for waste feed delivery, and prepare for treated waste receipts for the approximately 53 million gallons of legacy mixed radioactive waste currently at the Hanford Site tank farms. Safety and environmental awareness is integrated into all activities and work is accomplished in a manner that achieves high levels of quality while protecting the environment and the safety and health of workers and the public. This paper focuses on the innovative strategy to identify, retrieve, treat, and dispose of Hanford Transuranic (TRU) tank waste at the Waste Isolation Pilot Plant (WIPP).

INTRODUCTION

It has been recognized and documented for decades that there is a range of radioactive wastes stored at the Hanford Site Tank Farms. The breadth of materials includes various physical forms such as sludges, saltcakes, and liquids as well as a range of chemicals used in the defense mission. The waste includes high-level waste (HLW), transuranic (TRU) waste, and low-level waste [5 and 6]. The cleanup of these wastes will be in compliance with the *Hanford Federal Facility Agreement and Consent Order.*

The U.S. Department of Energy (DOE) once considered a single waste treatment approach to treat the Hanford Site tank waste - the Waste Treatment and Immobilization Plant (WTP). The WTP is the largest facility of its kind in the world. As a result of ongoing waste characterization efforts, opportunities have been identified to align the characteristics of the various wastes that were placed in the tanks with the treatment and disposal methodologies that could beneficially be applied to those wastes.

In a number of cases, wastes in the tanks were not generated by the reprocessing of spent nuclear fuel (SNF). These include wastes produced during cladding removal prior to reprocessing; wastes produced during plutonium purification; wastes produced due to equipment/facility decontamination; and laboratory wastes. An example of this was double-shell tank waste that

the Nuclear Regulatory Commission stated "clearly do not contain HLW..." and was retrieved, treated, and retrievably disposed at the Hanford Site in 1989 [12]. By tailoring treatment and disposal to a waste stream's origin and characteristics, the DOE can increase the overall treatment efficiency and reduce the time and lifecycle cost to complete the cleanup of tank wastes in full compliance with applicable regulations and the DOE commitments. Specific to this workshop, selected Hanford Site TRU waste tanks will be discussed.

EXTENSIVE CHARACTERIZATION CONDUCTED

Extensive characterization work has been conducted in the past decade on the history, origin, chemical, physical, and radiological properties of the Hanford waste stored within its tank farms. This work was conducted in response to *Defense Nuclear Facility Safety Board Recommendation 93-5* and for the *Hanford Federal Facility Agreement and Consent Order* milestone M-44. The characterization work included an extensive review of operational records to understand the waste generation processes, how the physical configuration of piping went from the processes to the tanks and the resultant tank fill history. Information provided by these records is confirmed by sampling and analysis of tank contents. A pivotal discovery was that the eight (8) TRU tanks discussed in this paper when retrieved, treated and packaged would be contact-handled versus the prior assumption they would be remote-handled.

WASTE GENERATION PROCESSES AT THE HANFORD SITE

The Hanford Site was established in 1943 to produce plutonium from spent nuclear fuel (SNF) as part of national defense activities. During the over 50 years of operations conducted at the Hanford Site, three main chemical separation processes were used to recover plutonium from SNF. All three of these chemical separation processes generated product streams, as well as, HLW, low-level waste, and TRU waste streams. The wastes from the Reduction-Oxidation (REDOX) process: 1951 - 1967; and Plutonium-Uranium Extraction (PUREX) process: 1956 - 1990 processes were not transferred to the tanks that are the subject of this paper and are not discussed further. In general, the low-level waste streams generated from these chemical separation processes have been either disposed or mixed with HLW in the tank system. The HLW generated from reprocessing SNF in these chemical processes will be treated at the Hanford Site Waste Treatment and Immobilization Plant and disposed at the national SNF and HLW repository.

The wastes in the eight (8) tanks discussed in this paper are from the Bismuth Phosphate process (BPP): 1945 – 1956. The contact-handled TRU waste stored in the eight (8) Hanford tanks originated from the Plutonium Concentration Building (224 building) work conducted from 1945 through 1956. The 224 Plutonium Concentration Building received plutonium product solution from the separations building (221 Plant), both of which were part of the Bismuth Phosphate Process (BPP).

Bismuth Phosphate Process

The BPP, the first production-scale SNF reprocessing process ever used, was deployed during the Manhattan Project (World War II) to separate plutonium (Pu) from SNF [1 and2]. The BPP process was a batch specific process with a specific input stream (such as Plutonium solids)

entered a process step and well understood product streams (such as declad SNF) and waste streams (such as condensate) exited a process step.

Figure 1 is a simplified diagram of the BPP process that is used to illustrate the batch processes and demarcation points between process steps. The BPP achieved thorough liquid/solids separation via centrifugation and multiple water rinses of the centrifuge solids cake, thereby removing liquids and soluble materials from the cake. Each batch process step resulted in an extensive and selective separation of the process wastes from the process product streams that contained plutonium.

The BPP consisted of five batch process steps conducted in the 221-B and 221-T Plants and plutonium concentration step conducted in the 224-B and 224-T Buildings. The five BPP batch process steps conducted in the 221-B and 221-T Plants were:

Coating Dissolution;
Uranium Dissolution;
Uranium Separation;
First Decontamination Cycle for plutonium; and
Second Decontamination Cycle for plutonium.

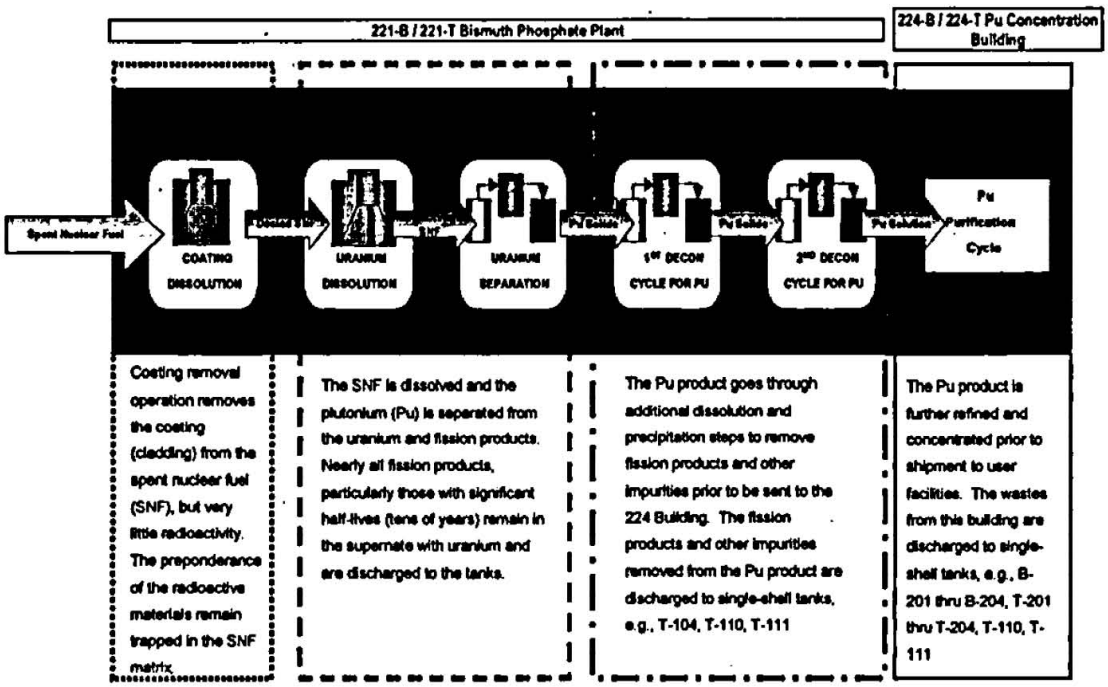

Fig. 1. Diagram demonstrating Simplified Bismuth Phosphate Process.

Coating Removal

Prior to actual reprocessing of the SNF, the aluminum coating of the SNF had to be removed to expose the uranium fuel. A boiling solution of sodium nitrate and sodium hydroxide was used to dissolve coating. While virtually all of the radioactive fission products remained within the intact spent fuel matrix, small amounts of radioactive materials at the surface of the fuel slugs entered the coating removal solutions. The coating removal step is considered a "head-end process" and not part of SNF reprocessing since the SNF remained intact throughout the coating removal process. The coating removal wastes were subsequently combined with first cycle plutonium decontamination waste (discussed below) to use the excess sodium hydroxide in the coating removal wastes to neutralize acids in the first cycle decontamination wastes. The eight (8) Hanford tanks discussed in this paper did not receive coating waste.

Uranium Dissolution and Uranium Separation

Following removal of the coating, the uranium fuel slugs were dissolved in nitric acid. Once dissolved, water and sulfuric acid were added to convert uranyl nitrate to uranyl sulfate. Next, bismuth nitrate and phosphoric acid were added and a bismuth phosphate carrier solid was formed that extracted plutonium from solution as precipitated solids. The uranyl sulfate remained in solution along with nearly all of the long-lived fission products such as cesium-137 (Cs^{137}) and strontium-90 (Sr^{90}). The plutonium solids were then separated from the uranium and fission products solution via centrifuging. The bismuth phosphate and plutonium solids were rinsed with water and re-centrifuged three times to remove any waste liquids and soluble fission products that may have been initially entrained in the solids. The bismuth and plutonium solids were transferred to the first plutonium decontamination cycle.

The uranium and fission products solution along with the water used to wash the plutonium solids were combined and discharged to specific underground storage tanks. This combined waste stream was known as metal waste (designated as MW).

Acids introduced during uranium dissolution dissolved the SNF, placing the plutonium, the uranium, and all of the fission products in solution. The dissolved uranium fuel was then acted upon in the uranium separation step to separate plutonium as a solid. The uranium separation process step selectively precipitated the plutonium as a solid, leaving the uranium and fission products in solution as so-called metal waste.

The metal waste from uranium separations contained over 99.5% of the SNF constituent elements including >99.5% of the uranium, ~99% of the Cs^{137}, and ~90% of the Sr^{90}. The extensive liquid/solids separations and multiple rinses conducted during uranium separations ensured that any liquid wastes produced directly in reprocessing were discharged as liquid wastes and did not follow the plutonium solids into the first or second decontamination cycles or beyond. The eight (8) Hanford tanks discussed in this paper did not receive metal waste.

First and Second Decontamination Cycles

The plutonium precipitate from the uranium separation step, once triple-rinsed, contained >99.5% of the plutonium, <0.5% of the uranium, and ~10% of the fission products. At least half of the fission products were short-lived isotopes that decayed to deminimis levels within one to two years. Because the SNF constituent elements were separated during uranium separations, no SNF was present in the subsequent plutonium decontamination cycles.

In the first plutonium decontamination cycle, the plutonium solids were dissolved and oxidized to the +6 valence state via the addition of sodium bismuthate and sodium dichromate. Sodium bismuthate, phosphoric acid, zirconium nitrate, and cerium nitrate were added to precipitate bismuth phosphate and fission products (primarily strontium, cerium, and zirconium). The bismuth phosphate and fission product precipitate solids were centrifuged to separate them from the plutonium, which remained in the liquid phase. The bismuth phosphate and fission product precipitate solids were dissolved in nitric acid and discharged to specific underground storage tanks as part of the first decontamination cycle waste (called '1C' waste).

Following separation, the plutonium in the liquid phase was reacted with bismuth subnitrate and phosphoric acid to produce a bismuth phosphate carrier and co-precipitate plutonium phosphate as solids. The bismuth phosphate carrier and plutonium phosphate solids were separated from the mother liquor by centrifugation. The plutonium phosphate solids were water-washed and centrifuged three times. The mother liquor and wash water were combined and discharged to specific underground storage tanks as part of the first decontamination cycle waste.

The bismuth phosphate and plutonium phosphate solids were then dissolved in nitric acid, forming plutonium nitrate and bismuth nitrate in solution. This solution was then transferred to the second decontamination cycle where the first decontamination process steps (except for zirconium nitrate and cerium nitrate addition) were repeated to further purify the plutonium product. Waste solutions generated from the second decontamination cycle (called '2C' waste) were discharged to specific underground storage tanks.

The eight (8) Hanford tanks discussed in this paper did not receive first or second plutonium decontamination cycle wastes.

At the end of the second decontamination cycle, the washed plutonium solids were dissolved in nitric acid and transferred to the 224-B or 224-T Concentration Buildings for further processing.

224 Buildings

The plutonium solution from the 221-B (or 221-T) Plant was transferred to the 224-B (or 224-T) Concentration Building to remove the bismuth phosphate and residual fission products, which were essentially all short half-life contaminants. The plutonium solution was received at 224 Concentration Building in a +4 valence state. It was first oxidized with sodium bismuthate to a +6 valence state. Phosphoric acid was added to precipitate bismuth phosphate along with residual Zr^{95} and Nb^{95} fission products, which were then removed by centrifugation leaving the plutonium in solution. Hydrogen fluoride and lanthanum fluoride were added to precipitate remaining fission products leaving the plutonium in solution. Hydrogen fluoride and lanthanum salts were then added to create lanthanum fluoride and plutonium fluoride solids, which were separated by centrifugation. The lanthanum fluoride and plutonium fluoride solids were reacted with potassium hydroxide to produce lanthanum hydroxide and plutonium hydroxide. The lanthanum hydroxide and plutonium hydroxide solids were reacted with nitric acid to produce the high-purity plutonium nitrate/lanthanum nitrate product.

The waste solution generated from processing plutonium solutions in the 224 Concentration Buildings were discharged to specific underground storage tanks. An extensive review of historical documents, such as monthly reports and construction drawings, was conducted to verify the waste transfer routes. Figure 2 depicts the waste routing from the 222-B Plant to the four B-200 series tanks.

> *Beginning in October 1946, tanks 241-B-201 through 241-B-204 were used as settling tanks for the solids that were contained in the 224-B Concentration building waste, with the liquid discharged to the 241-B-1 and 241-B-2 cribs. Prior to October 1946, the waste from the 224-B Concentration building was transferred to the 361-B settling tank and the liquid portion discharged to the 241-B-361, reverse-well. By September 1946, solids had accumulated in the 361-B settling tank to a point where the tank had reached its storage capacity, causing shutdown of 221-B and 224-B building operations, as reported in the Army Corp of Engineers monthly report for September 1946 (14, page 77). A project was initiated in August 1946 to divert the 224-B Concentration building waste to tank 241-B-201 (15). The Army Corp of Engineers monthly report for October 1946 reports this project was completed on October 1, 1946, at which time a connection was made from the 224-B building waste transfer line to tank 241-B-201* (14, page 87).

Tanks 241-B-201 through 241-B-204 received waste from the 224-B Concentration Building until June 1952. Tanks 241-B-201 through 241-B-204 also received miscellaneous low-level wastes (e.g., off-gas scrubber condensate and flush solutions). Similarly, the 224-T Concentration Building waste was initially transferred to the 361-T settling tank (December 1944 through October 1946) and subsequently to tanks 241-T-201 through 241-T-204 (November 1946 through May 1952) [13].

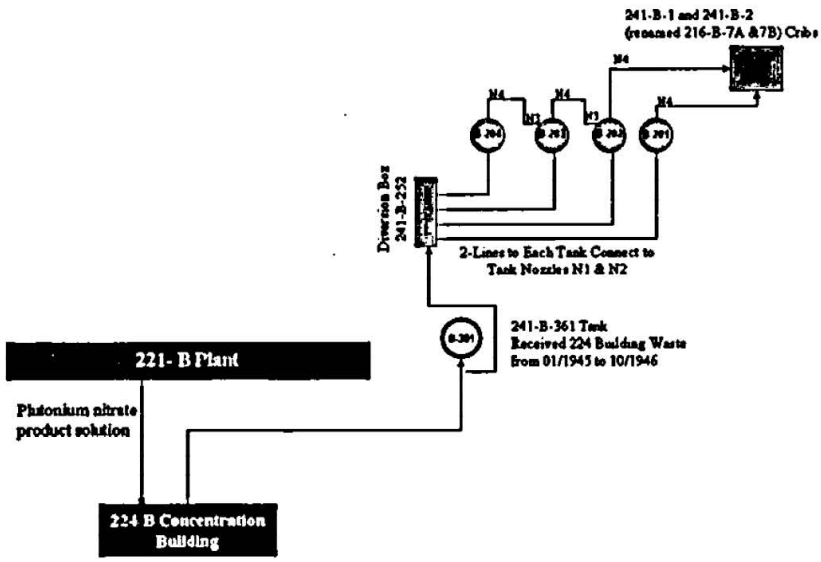

Fig. 2. Diagram of 224-B waste routing to B-200 series SSTs.

Tanks Receiving BPP Wastes

The fission product concentrations are expected to be orders of magnitude higher for the wastes from the reprocessing step than for the other steps in the process because of the batch nature of the BPP. This is confirmed by analytical results. Figure 3 provides the gross gamma and gross beta concentrations of fission products measured in the waste received into some of these tanks from the BPP. These gross gamma and gross beta concentration measurements were obtained at the time each tank was filled with the specified waste. Figure 3 clearly shows that the concentration of fission products from the reprocessing step (the 'metal waste' or HLW) was dramatically higher than any subsequent step further validating the ability to characterize where the waste from the various process steps came from. In fact, the radionuclide concentration in metal waste is seen to be more than 100 times that of 1C waste, more than 1,000 to 100,000 times that of 2C and 224 wastes.

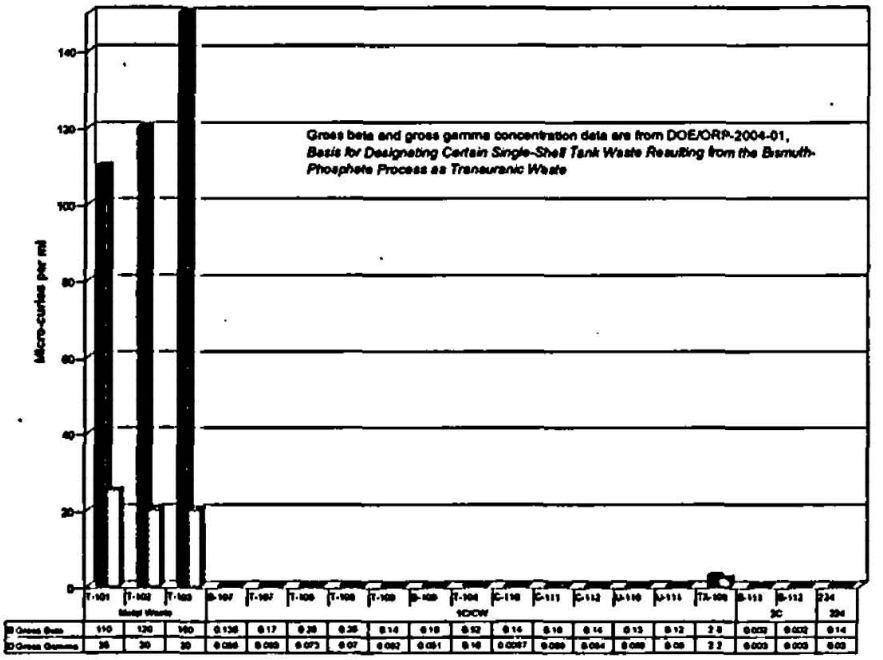

Fig. 3. Chart of fission product activity in Bismuth Phosphate Process Wastes (Late 1940s).

The fission product and TRU elements concentrations of the TRU solids stored in these eight (8) SSTs are listed in Table I. The low fission product concentrations (see Table I) in these wastes are consistent with origin of the waste.

Table I. Candidate Contact-Handled Single-Shell Tanks TRU Waste Designation

Tank	Waste Volume (kgal)	TRU (nanocuries/gram)	Cs^{137} (curies/liter) (1)	Sr^{90} (curies/liter) (1)
B-201	30	824	0.0002	0.002
B-202	29	214	0.0001	0.004
B-203	51	297	0.000008	0.00009
B-204	50	263	0.00003	0.0017
T-201	29	754	0.00004	0.0001
T-202	21	221	0.00003	0.000003
T-203	37	295	0.00002	0.000003
T-204	37	243	0.000009	0.000005

Notes: (1) The concentrations of Cs^{137} and Sr^{90} are reported for these wastes as presently stored in these tanks. The treatment process will increase the concentration of radionuclides by removing free and bound water from these wastes. The Hanford Site maintains a Best Basis Inventory for all tank wastes, which is available at http://twins.pnl.gov/twins.htm. The Best Basis Inventories are re-evaluated on a periodic basis when new information becomes available.

WASTE MANAGEMENT PRACTICES

A summary description of the processes used to generate the subject waste, the piping configurations used to carry the waste to the specific tanks, and the analytical information that confirms the understanding was presented above. It is also instructive to review how the waste has been managed and what decisions have been made regarding the subject waste.

The DOE has regulatory authority associated with the radioactive material stored in Hanford Tanks and has long had in place waste management rules that require the segregation of TRU waste from HLW to the extent practical (e.g., DOE Order 5820.2A, which was later superseded by DOE Order 435.1). Similarly, DOE's predecessor agencies required the segregation of wastes based on waste characteristics. The requirements were intended to facilitate both treatment and disposal activities.

In the Hanford Site tank farms, this segregation was achieved by establishing separate, dedicated storage tanks for each waste type where possible (e.g., HLW, low-level, and TRU wastes), restricting the transfer of wastes among tanks, and by subjecting tank wastes to specific administrative controls and decision-making processes. The administrative controls associated with segregating the TRU tank wastes remain in effect today.

Notwithstanding the physical segregation of waste by type, DOE and its contractors at the Hanford Site managed the TRU tank wastes under the stringent standards for HLW in order to preclude the need to construct and maintain a separate tank system for interim storage of TRU tank wastes. This also avoided the establishment of separate safety protocols for the management of different tanks, depending on whether the wastes were high-level, TRU, or low-level. Management efficiencies were achieved by applying the same safety standards to all tank wastes regardless of type.

DECISIONS REGARDING TRU TANK WASTES

In 1988, following the preparation of the Hanford Defense Waste Environmental Impact Statement [7], DOE issued a Record of Decision (ROD) (53 FR 12449, April 8, 1988, "Record of Decision, Hanford High-Level, TRU, and Tank Wastes") on the proposed disposition of the tank wastes. DOE's ROD announced its decision to retrieve and treat wastes contained in the Double-Shell Tanks (DSTs). The ROD also announced that wastes contained in the Single-Shell Tanks (SSTs), as well as buried TRU and other site wastes, would be further studied and their treatment and disposal would be the subject of future National Environmental Policy Act analyses and decisions. Consistent with this ROD, DOE initiated plans to construct the Hanford Waste Vitrification Plant, which would have had the capacity to complete waste treatment of DST wastes.

In the early 1990s, DOE determined that it needed to develop and implement a strategy to retrieve and treat the tank wastes in both the SST and DST systems. This strategic change required a significant increase in the total treatment capacity. The Hanford Waste Vitrification Plant, in design at that time, was determined to have insufficient capacity to support completion

of the mission and was cancelled. A series of technical studies were undertaken in 1993 to establish a new path forward. A new plan emerged in 1995 to construct a much larger vitrification facility, with a pretreatment facility to separate low-activity tank wastes from high-activity tank wastes. The separate waste streams would then go to large vitrification facilities; one to immobilize the fraction of the wastes commonly called low-activity waste, and one to immobilize the high-activity waste fraction of the wastes, commonly called the HLW. This new treatment complex was to be constructed and begin operations in 1998, with the completion date of 2028 for the retrieval and treatment mission (approximately 30 years of operations).

During the planning timeframe of the early 1990s, DOE and its contractors conducted a series of additional studies to consider other waste treatment strategies. One particular study conducted in 1995 focused on identifying SSTs and DSTs containing TRU wastes [8]. As an element of that study, the tank histories and inventories were reviewed to identify which of the tanks contained TRU wastes. TRU tank waste treatment strategies were developed using the definitions from the WIPP Land Withdrawal Act (LWA), the draft WIPP Waste Acceptance Criteria (WAC), and an earlier U.S. Nuclear Regulatory Commission proposed rulemaking associated with HLW definitions.

This same study identified an initial population of tanks that contain TRU wastes. The study also indicated that further characterization and development of tank process history would likely establish that additional tanks contained TRU wastes.

In 1995, the DOE determined that alternative tank waste disposal strategies should be evaluated based on the projected cost difference between estimated disposal costs for the HLW repository (assumed to be Yucca Mountain) and WIPP. Two follow-on technical studies were commissioned and issued.

The first was a decision document issued in 1996 recommending that the technical planning baseline be modified to include blending of the TRU tank wastes with HLW feeds for treatment and disposal of that blended material in the national HLW repository, rather than separately packaging it for disposal at the WIPP [9]. The decision document was updated in 1996 to include an alternatives evaluation appendix. The second document, issued in 1996, established the technical feasibility of separately processing this TRU material for disposal in the WIPP [10].

In August 1996, DOE concurred with the recommendation that TRU tank waste should be processed with the HLW and authorized changes to the planning basis [11]. As a consequence of this decision, the TRU tank waste streams were not included in the 1995 TRU Waste Baseline Inventory Report (TWBIR) for WIPP because DOE believed it had another cost-effective disposal pathway. Nevertheless, DOE specifically precluded any changes to the waste management procedures, thus requiring continued segregation of stored TRU wastes from HLW.

Subsequent developments prompted a re-evaluation of the most appropriate and cost-effective pathway for the disposition of TRU tank wastes. The primary changes were:

- Historical knowledge of the sources and inventories of wastes in the tank farm has confirmed that the wastes in up to twenty tanks originated from the processing and purification operations of TRU elements.

- Based on its current capacity and processing schedule, the Waste Treatment and Immobilization Plant will not have the capability to process the tank wastes by the *Hanford Federal Facility Agreement and Consent Order* (Tri-Party Agreement) milestone of 2028. It is evident that processing the TRU tank wastes in the Waste Treatment and Immobilization Plant would require two to three years of additional operation at ~$400M per year.

- Significant tank waste characterization has been accomplished since 1996, and it is apparent that the TRU wastes contained in eight (8) of the tanks will be contact-handled when packaged for disposal at the WIPP.

- The WIPP has several years of operating experience with various types of TRU wastes, and the Waste Acceptance Criteria for WIPP disposal are better known and understood.

REGULATORY PROCESSES

Statutory Definitions

In evaluating the wastes contained in these tanks, the Department of Energy as applied the definition of TRU waste from the WIPP Land Withdrawal Act of 1996, as amended (LWA) and the definition of HLW from the Nuclear Waste Policy Act of 1982, as amended (NWPA).

The *WIPP Land Withdrawal Act (LWA) of 1992, P. L. No. 102-579, 106 Stat. 4777, as amended by the WIPP LWA Amendments of 1996, P. L. 104-201, 110 Stat. 2422*), defines TRU wastes as:

> *The term "transuranic waste" means waste containing more than 100 nanocuries of alpha-emitting transuranic isotopes per gram of waste, with half-lives greater than 20 years, except for:*
>
> *(A) high-level radioactive waste;*
>
> *(B) waste that the Secretary has determined, with the concurrence of the Administrator, does not need the degree of isolation required by the disposal regulations; or*
>
> *(C) waste that the Nuclear Regulatory Commission has approved for disposal on a case-by-case basis in accordance with part 61 of title 10, Code of Federal Regulations.*

The Nuclear Waste Policy Act of 1982 (42 U.S.C. 10101(12)), as amended defines HLW as:

> *(A) the highly radioactive material resulting from the reprocessing of spent nuclear fuel, including liquid waste produced directly in reprocessing and any solid material derived from such liquid waste that contains fission products in sufficient concentrations; and (B) other highly radioactive material that the Commission, consistent with existing law, determines by rule requires permanent isolation*

Reprocessing is a chemical process by which spent nuclear fuel is dissolved and the isotopes of interest such as plutonium and uranium are separated from other spent fuel constituents, i.e., waste products. A key element of reprocessing is the separation of isotopes of interest (e.g. plutonium) and waste products from spent nuclear fuel. The term "spent nuclear fuel" means fuel that has been withdrawn from a nuclear reactor following irradiation, the constituent elements of which have not been separated by reprocessing. In the Bismuth Phosphate process, the plutonium recovery technology initially used at the Hanford Site, spent nuclear fuel was separated into its constituent elements during the uranium metal dissolution process step.

As discussed, the wastes in these eight (8) tanks came from the 224 plutonium Concentration Buildings. These buildings received only Plutonium solution and did not see SNF or HLW. The wastes received in these eight (8) tanks were derived from processing plutonium and not from processing SNF. The wastes in the subject tanks meet the definition of TRU waste set forth in the LWA and are, therefore, appropriate for disposal at WIPP. Specifically, these wastes are not HLW and, when retrieved, treated and packaged for eventual shipment to WIPP will meet all WIPP waste acceptance criteria including that these wastes contain more than 100 nanocuries of alpha-emitting TRU isotopes per gram of waste, with half-lives greater than 20 years.

The fact that these wastes are not HLW is supported by comparison of tank waste fission product concentrations to the U.S. Nuclear Regulatory Commission limits for near surface disposal of low-level waste. As expected, the tank waste fission product concentrations for waste from process steps after the reprocessing step are orders of magnitude lower than required for disposal of in a geologic repository (see 10 CFR Part 61), as depicted in Figure 4 [3].

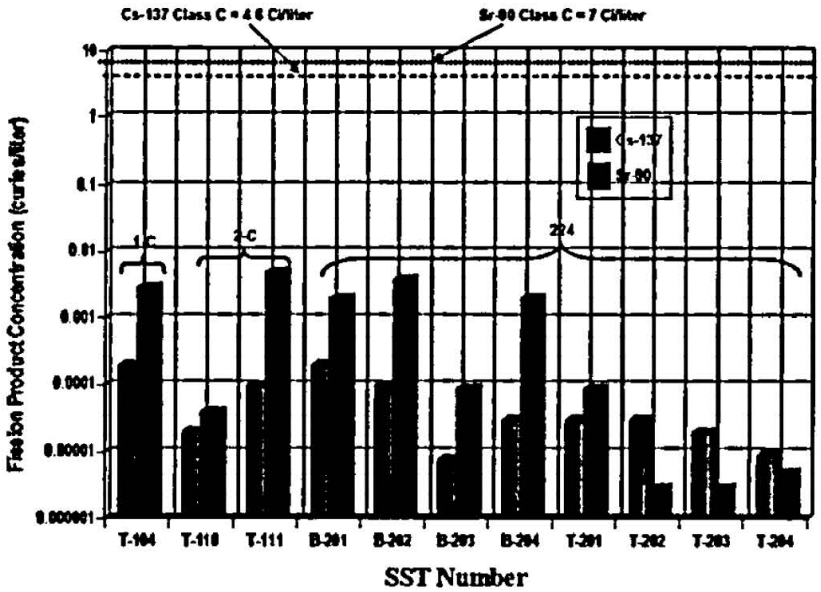

Fig. 4. Chart of Cs^{137} and Sr^{90} concentrations in 1C, 2C, and 224 wastes from BPP[1].

TRU TANK WASTE TREATMENT PLAN

To prepare the Hanford Site TRU tank wastes for shipment to WIPP, the DOE will retrieve the wastes using a retrieval system in conjunction with a limited amount of water to facilitate recovery and to transfer wastes to the co-located waste treatment and packaging system. The wastes will be retrieved from the waste tanks in a systematic and controlled fashion, utilizing a closed loop retrieval process which ensures the wastes and supporting Acceptable Knowledge remains unaffected, which ensures the acceptability of the wastes at the WIPP. The retrieval system will further homogenize the wastes as a function of the retrieval operations.

The contact-handled TRU tank wastes would be dewatered and mixed with additives (adsorbents such as sand and vermiculite are being considered) to yield a homogeneous solid waste form meeting WIPP waste acceptance criteria. The WIPP waste acceptance and transportation protocols will be adhered to throughout the treatment and packaging operations. Wastes will be packaged in NRC-certified waste containers. Waste containers will be visually examined to confirm the acceptability of the wastes while providing independent validation that wastes are compliant with the waste stream profile and meet the WIPP requirements.

WIPP compliant waste characterization will be performed by trained professional staff performing to WIPP approved procedures, on certified equipment, and in compliance with the waste acceptance criteria. Independent review and certification of wastes to verify compliance

[1] DOE/RL-2004-01, page 9: The Cs^{137} and Sr^{90} concentrations are decay corrected to January 1, 2001 and are based on analyses of waste samples obtained from the identified tanks.

with the WIPP Hazardous Waste Facility Permit requirements will be performed by an independent, trained, and certified waste certification team.

Waste loading and shipping operations will be performed in compliance with the WIPP Hazardous Waste Facility Permit, the Nuclear Regulatory Commission, and the U.S. Department of Transportation (DOT) transportation criteria. These operations will be performed by trained staff in accordance with approved procedures on certified equipment. Loading operations personnel, equipment, facilities, and processes will comply with the requirements and be independently certified to ensure WIPP compliance. Waste packages and their supporting characterization data will be submitted, independently reviewed, and authorized for shipment prior to the commencement of loading and shipping operations.

CONCLUSION

The waste within the Hanford Site tank farms has been managed under the more restrictive HLW requirements as a matter of operations management policy. Depending on origin, process history, and radiological characteristics, the wastes in any specific tank will be appropriately retrieved, treated, and disposed as HLW, TRU, or low-level waste. The TRU waste from the eight (8) Hanford Site tanks discussed in this paper are the result of batch processes that enable a clear understanding of what waste came from what part of the process. This is substantiated by physical sample and analysis characterization information. As a result, the waste may be beneficially packaged and disposed at the WIPP.

REFERENCES

1. HW-10475-C, 1944, *Hanford Technical Manual*, Section C, DuPont Company, Richland, Washington.

2. HW-23043, 1951, *Flow Sheets and Flow Diagrams of Precipitation Separations Process*, General Electric Company, Richland, Washington.

3. DOE/ORP-2004-01, 2004, Basis for Designating Certain Hanford SST Waste Resulting from the Bismuth Phosphate Process as TRU Waste, U.S. Department of Energy, Office of River Protection, Richland, Washington.

4. Statement of Proposed Policy (34 FR 8712) for Appendix D, 10 CFR Part 50 "Policy Relating to the Siting of Fuel Reprocessing Plants and Related Waste Management Facilities"

5. DOE/EIS-0189, August 1996, page S-3, "Tank Waste Remediation System, Hanford Site, Richland, Washington, Final Environmental Impact Statement", U.S. Department of Energy.

6. DOE/RL-88-13, June 1988, "Implementation Plan for the Record of Decision for Disposal of Hanford Defense High-Level, Transuranic and Tank Wastes", Background section, U.S. Department of Energy, Richland, Washington.

7. DOE/EIS-0113, 1987, *Final Environmental Impact Statement Disposal of Hanford Defense High-Level, Transuranic and Tank Wastes Hanford Site Richland, Washington,* U.S. Department of Energy, Washington, D.C.

8. WHC-SD-WM-ES-331, 1995, *Identification of Potential Transuranic Waste Tanks at the Hanford Site*, Rev. 0, Westinghouse Hanford Company, Richland, Washington.

9. WHC-SD-WM-ES-368, 1996, *Decision Document for Transuranic Tank Waste Disposal*, Rev. 0, Westinghouse Hanford Company, Richland, Washington.

10. WHC-SD-WM-ES-386, 1996, *Technical Feasibility of Transuranic Tank Waste Processing in High-Level Waste Vitrification Facility*, Rev. 0, Westinghouse Hanford Company, Richland, Washington.

11. W. J. Taylor, U.S. Department of Energy, Richland Operations Office, to President, Letter 96-WDD-102, Westinghouse Hanford Company, *Concurrence with Westinghouse Hanford (WHC) Recommendation on Transuranic (TRU) Tank Waste Disposal*, dated August 1, 1996.

12. WHC-SD-WM-ER-059, 1989, *Phosphate Sulfate Waste Grout Campaign Report,* Rev. 0, Westinghouse Hanford Company, Richland, Washington.

13. RPP-13300, 2004, *Origin of Wastes in the B-200 and T-200 Series Single-Shell Tanks*, Rev. 1,CH2M HILL Hanford Group Inc., Richland, Washington

14. HAN-45800, 1946, *200 Areas Monthly Reports December 1944 thru December 1946*, United States Engineer Office, Hanford Engineering Works, Pasco, Washington

15. HW-7-4640, 1946, *Additional Concentration Building Facilities (361-By-Pass)*, Hanford Engineering Works, Richland, Washington