sta. 4 S

AUG 12 2004

ENGINEERING DATA TRANSMITTAL

1. EDT 821088

1A. Page 1 of 1

2. To: (Receiving Organization) Distribution	3. From: (Originating Organization) Engineering Standards	4. Related EDT No.: N/A
		7. Purchase Order No.: N/A
5. Proj./Prog./Dept./Div.: Vapor Solutions Team/Engineering Services	6. Design Authority/Resp. Engr./Design Agent: Tom Frater	9. Equip./Component No.: N/A
		10. System/Bldg./Facility: N/A
8. Originator Remarks: This document was developed to close in part action C-10 OA Team recommedations		12. Major Assembly Dwg. No.: N/A
		13. Permit/Permit Application No.: N/A
11. Receiver Remarks:	11A. Design Basis Document? ☐ Yes ☒ No	14. Required Response Date: N/A

15. DATA TRANSMITTED

(A) Item No.	(B) Document/Drawing No.	(C) Sheet No.	(D) Rev. No.	(E) Title or Description of Data Transmitted	(F) Approval Designator	(G) Reason for Transmittal	(H) Originator Disposition	(I) Receiver Disposition
1	RPP-22171		0	Lessons Learned from Previous Waste Storage Tank	N/A	1		
				Vapor Control Attempts DST/SST Farms				

16. KEY

Approval Designator (F)	Reason for Transmittal (G)	Disposition (H) & (I)
See TFC-ESHQ-Q-INSP-C-05	1. Approval 2. Review 3. Post-Review	1. Approved 2. Approved w/comment 3. Reviewed no comment 4. Reviewed w/comment 5. Disapproved

17. SIGNATURE/DISTRIBUTION

(G) Reason	(H) Disp.	(J) Name	(K) Signature	(L) Date	(M) MSIN	(G) Reason	(H) Disp.	(J) Name	(K) Signature	(L) Date	(M) MSI
		Design Auth.									
1	1	Resp. Engr. Tom Frater	Tom Frater	8-12-04	R1-14						
1	1	Resp. Mgr. Mike Fish	G Faust for	8/12/04	R1-14						
		QA									
		Safety									
		Env.									
		Design Agent									

18. Tom Frater 8-12-04 Signature of EDT Originator Date T Frater	19. DOE APPROVAL (if required) Ctrl. No. N/A	20. G Faust for MA Fish 8/12/04 Design Auth./Resp. Engr./Resp. Mgr. Date G Faust

BD-7400-172.2 (08/0

Lessons Learned from Previous Waste Storage Tank Vapor Control Attempts on Single and Double Shell Tank Farms

David M. Baker
CH2M Hill Industrial Design and Construction
Richland, WA 99352
U.S. Department of Energy Contract DE-AC27-99RL14047

EDT/ECN: 821088 UC: n/a
Cost Center: n/a Charge Code: n/a
B&R Code: n/a Total Pages: ~~172~~ 174
cc 8-12-04

Key Words: Carbtrol, HEGA Filters, Vapor Mixing, Tank C-103, Lessons Learned

Abstract:
This report forms the basis for a feasibility study and conceptual design to control vapor emissions from waste storage tanks at the Hanford Site. The Carbtrol, Vapor Mixing, and High Efficiency Gas Absorber (HEGA) vapor controls were evaluated to determine the lessons learned from previous failed vapor control attempts. This document illustrates the resulting findings based on that evaluation.

TRADEMARK DISCLAIMER. Reference herein to any specific commercial product, process, or service by trade name, trademark, manufacturer, or otherwise, does not necessarily constitute or imply its endorsement, recommendation, or favoring by the United States Government or any agency thereof or its contractors or subcontractors.

Printed in the United States of America. To obtain copies of this document, contact: Document Control Services, P.O. Box 950, Mailstop H6-08, Richland WA 99352, Phone (509) 372-2420; Fax (509) 376-4989.

AUG 12 2004
DATE:
STA: 4
RELEASE
ID: 21

8/3/04
Release Approval Date Release Stamp

Approved For Public Release

LESSONS LEARNED FROM PREVIOUS WASTE STORAGE TANK VAPOR CONTROL ATTEMPTS

SINGLE SHELL AND DOUBLE SHELL TANK FARMS

U.S. DEPARTMENT OF ENERGY

HANFORD SITE

Report No. RPP-22171 Rev 0

Prepared for

CH2M HILL HANFORD GROUP

Prepared by

CH2M HILL INDUSTRIAL DESIGN & CONSTRUCTION

May 2004

EXECUTIVE SUMMARY

CH2M HILL Industrial Design & Construction (IDC) is conducting a feasibility study and conceptual design to control vapor emissions from waste storage tanks at the Hanford Site. The first task in this effort was to determine the lessons learned from three specific previous vapor control attempts. The following vapor controls were evaluated:

- Carbtrol
- Vapor Mixing
- High Efficiency Gas Adsorber (HEGA)

The cause for the failure of both the Carbtrol and Vapor Mixing was clearly the buildup of condensed moisture due to inadequate heating and insulation. The HEGA modules in the 702AZ Exhausters are almost certainly failing because they are reaching breakthrough before their scheduled date for replacement. This should be expected, based on the loading of volatiles in the air stream and the capacity of the HEGA modules. High air stream temperatures and relatively high air stream moisture content also reduce the capacity of the HEGA modules.

It is concluded that high moisture content and temperature were the causes of complete failure for the Carbtrol and Vapor Mixing systems and contributed to the reduction in performance of the HEGA modules. The HEGA modules were also likely reaching breakthrough based on the length of time in service between changeout, the volatile organic loading, and the HEGA capacity. These conditions can be addressed through standard engineering approaches such as cooling, condensation, and/or reheat for moisture removal and adequate sizing of adsorption beds (possibly with onsite regeneration) for the HEGA modules. Therefore, the use of carbon adsorption, dilution, and stacks for discharge at higher elevation can be used alone or in combination to reduce ground-level concentrations of waste storage tank vapors. However, the issues of air stream moisture and carbon capacity must be adequately addressed to assure that performance meets expectations.

TABLE OF CONTENTS

Executive Summary ii

1.0 Introduction and Background 1

2.0 Description and Evaluation of Previous Vapor Control Attempts 1

2.1. Carbtrol 1
2.2. Vapor Mixing 3
2.3. High Efficiency Gas Adsorber 7

3.0 Conclusions 10

LIST OF FIGURES

Figure 1: Carbtrol and HEPA Installation 2
Figure 2: VMS Design Concept 4
Figure 3: VMS Drawing 4
Figure 4: Photo of VMS on Tank C-103 5
Figure 5: Closeup Photo of VMS on Tank C-103 6
Figure 6: Schematic Flow Diagram of AZ702 Exhauster 8

1.0 INTRODUCTION AND BACKGROUND

A feasibility study was conducted to evaluate available options to reduce or eliminate odorous vapors from the waste storage tanks at the Hanford site. If approved, recommended methods identified in the feasibility study will advance to the conceptual design phase. Several attempts have been made previously to control gaseous tank emissions. It is desired to determine why those attempts did not work well in order to avoid repeating mistakes. The purpose of this document is to describe those methods, identify the reasons why they either failed or did not totally attain their desired performance level, and provide recommendations that will be used during the feasibility study to ensure that the failure mechanisms are recognized and addressed.

2.0 DESCRIPTION AND EVALUATION OF PREVIOUS VAPOR CONTROL ATTEMPTS

Three different attempts previously used to control vapor emissions from the waste storage tanks have been identified. These are:

- Carbtrol
- Vapor Mixing
- High Efficiency Gas Adsorption

2.1. Carbtrol

Information was obtained on the Carbtrol system by interviewing current and past site employees and by searching the available site electronic files.

Carbtrol is the name of a company (http://www.carbtrol.com/) that sells primarily activated carbon systems for control of odors and organic emissions. Their products include 24-inch diameter by 34-inch high drums filled with activated carbon that are rated for airflows up to 500 cubic feet per minute (cfm).

According to Dave Sparks/CHG Operations, the Carbtrol system consisted of 3-55 gallon drums that were connected to the breather vent on tank C-103 in the early to mid-1990's. The system did not include a fan, so it relied on passive ventilation. The system plugged due to accumulation of water. Mr. Sparks recalled that the Carbtrol system was left connected to the breather vent for about one year. Another problem with the system was that there were no provisions for testing the collection efficiency by taking samples before and after the drums.

Several documents were found that describe the Carbtrol installation and support the conclusion that condensation of water was a problem. R. T. Kimura of Westinghouse Hanford Company sent a one page internal memo from Single-Shell Tank Process Engineering to TD Blankenship (carbon copy to ten others) dated October 12, 1989 (Accession # D194032078, Document # 13220-89-0076). A copy is in the Appendix. In summary, the memo states that the "Carbtrol absorption drum design" would be used on the Tank C-103 breather vent. It was stated that media had been found for organics, ammonia, and NOx (nitrogen oxides). The system was to be sized for a minimum six months cycle.

Engineering Change Notice 14634 was issued on April 25, 1990. It details the addition of heat tracing and insulation to tank breather systems, including the HEPA filter and the two activated carbon canisters. This indicates that heat tracing and insulation would have been installed shortly after to address the moisture buildup problem. No calculations were found that would demonstrate that the heat tracing/insulation would be adequate to prevent condensation.

A drawing of the Carbtrol installation, showing the two activated carbon canisters following the HEPA filter is in Figure 1. The first canister contains typical activated carbon. The second canister contains activated carbon treated to control ammonia. This is usually done by impregnating with acid.

Figure 1: Carbtrol and HEPA Installation

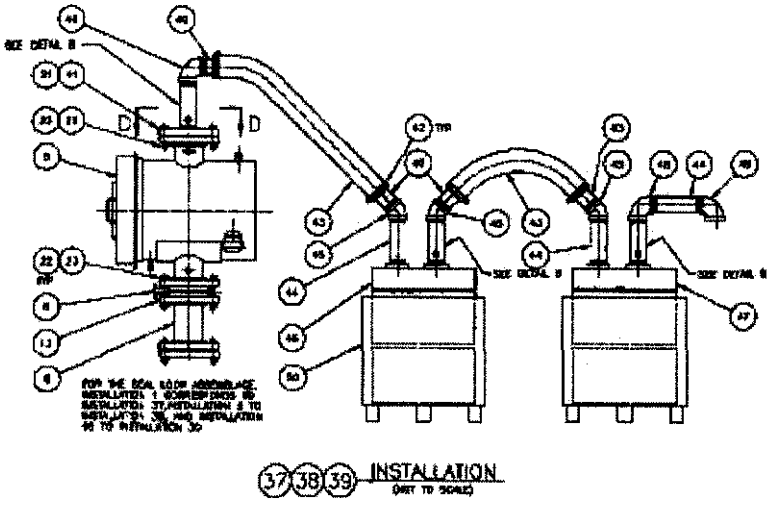

A document titled *Tank 241-C-103 Hazardous Vapor Exhauster* was issued by Ebasco Environmental and Hart Crowser on September 29, 1992. Statements made in the document include:

- Subsequent to a vapor exposure on July 3, 1987, the present breather system of a HEPA filter and two carbon canisters was installed.
- Further vapor incidents were not prevented.
- A system of HEPA filter, condenser, carbon canisters, and fan was proposed.

The reference to the "present" breather system indicates that the carbon canisters were still in place when the document was issued (9/29/92). The two carbon canisters were identified in the report as Carbtrol™. It was stated that the system had been placed in service on December 20, 1989. At the time of the document preparation, the system had been heat traced in an attempt to prevent moisture buildup. The inclusion of the condenser in the proposed system indicates that moisture buildup continued to be a problem even after the application of heat tracing.

Engineering Data Transmittal 604994, dated January 19, 1995, addressed the installation of a vapor flow monitor on Tank C-103. The workplan included the removal of the two Carbtrol

carbon canisters. The HEPA filter is identified as a Flanders G1 housing. No reasons are given for removing the carbon adsorber canisters.

Engineering Data Transmittal 604999, dated March 1995, contains an Engineering Task Plan for a Vapor Treatment System on Tank C-103. This is the Vapor Mixing System discussed later in this report. The background discussion included statements that:

- Carbon adsorption canisters were installed downstream of the breather filter in 1989.
- Multiple failures caused the passive system to be valved out of service in 1993.
- The failures were characterized by restriction of flow.
- An Engineering Evaluation concluded that the failures were due to accumulation of condensate within the canisters until the inlet piping was covered.

Since these failures continued to occur after the application of the heat tracing and insulation, it can be concluded that the amount of heat supplied to the system and/or the amount or coverage of the insulation was inadequate. It was also noted that the restriction in flow through the passive system would have added to tank pressure, causing an increase in fugitive emissions escaping the tank by other paths.

The temperature inside Tank C-103 varies from 92.7 °F to 111.0 °F. Information on relative humidity was not found, but tank headspace air is commonly thought to be at or near saturation. The annual mean temperature is about 55 °F. The amount of heat and insulation required to prevent condensation will depend on the tank air temperature, relative humidity, flowrate and the atmospheric conditions of temperature at any particular time. Flowrate through the passive vent system can vary widely over time. Heat tracing and insulation calculations were not found, but a low assumption of vent flowrate could easily result in undersizing the system. This would result in continued condensation of moisture.

2.2. Vapor Mixing

As mentioned in the previous section on the Carbtrol alternative, Engineering Data Transmittal (EDT) 604999, dated March 1995, contains an Engineering Task Plan for a Vapor Treatment System on Tank C-103. This is later commonly referred to as the Vapor Mixing System (VMS). The reason for implementing the VMS was the failure of the Carbtrol system. A design concept drawing for the VMS that was included in the EDT is shown in Figure 2. A more detailed drawing of the VMS is shown in Figure 3. A photograph of the VMS in its current disconnected state at Tank C-103 is shown in Figure 4. A closeup photograph of the current VMS installation at Tank C-103 is shown in Figure 5.

The concept behind the VMS is described in the Engineering Task Plan. The discharge from the HEPA filter on the breather vent of the tank is connected by a 2-inch flexible hose to the VMS. The VMS includes a blower that forces 800 cubic feet per minute (cfm) of ambient air up a stack. The breather vent hose is connected to a draw tube that

Figure 2: VMS Design Concept

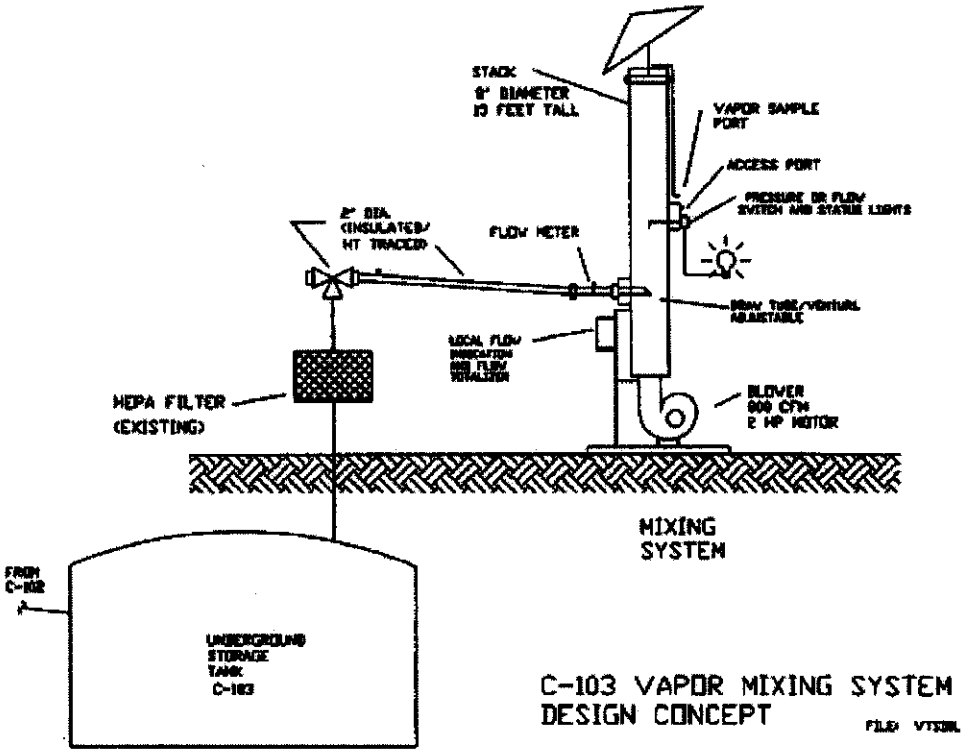

Figure 3: VMS Drawing

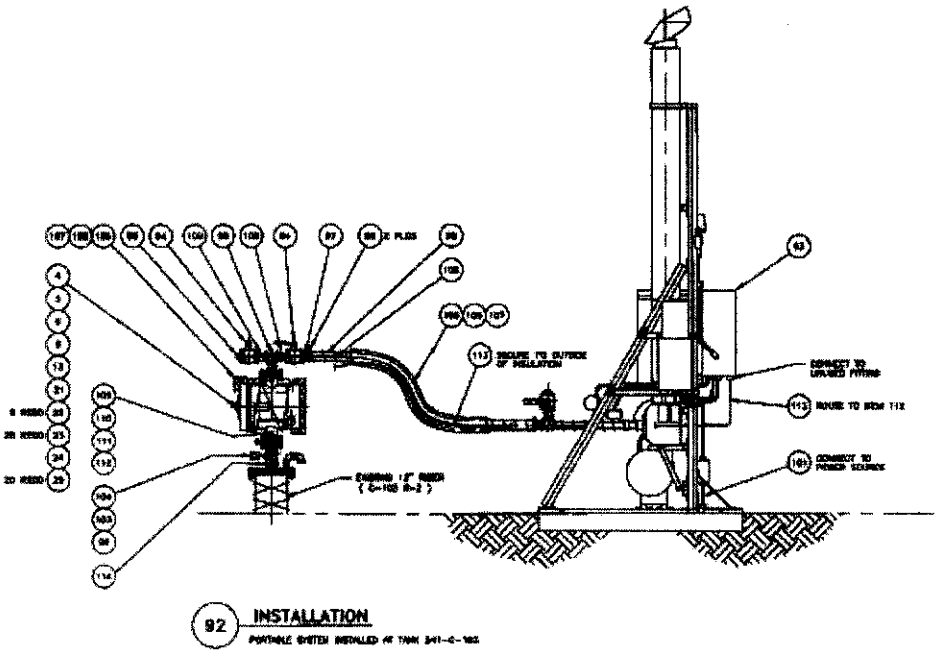

Figure 4: Photo of VMS on Tank C-103

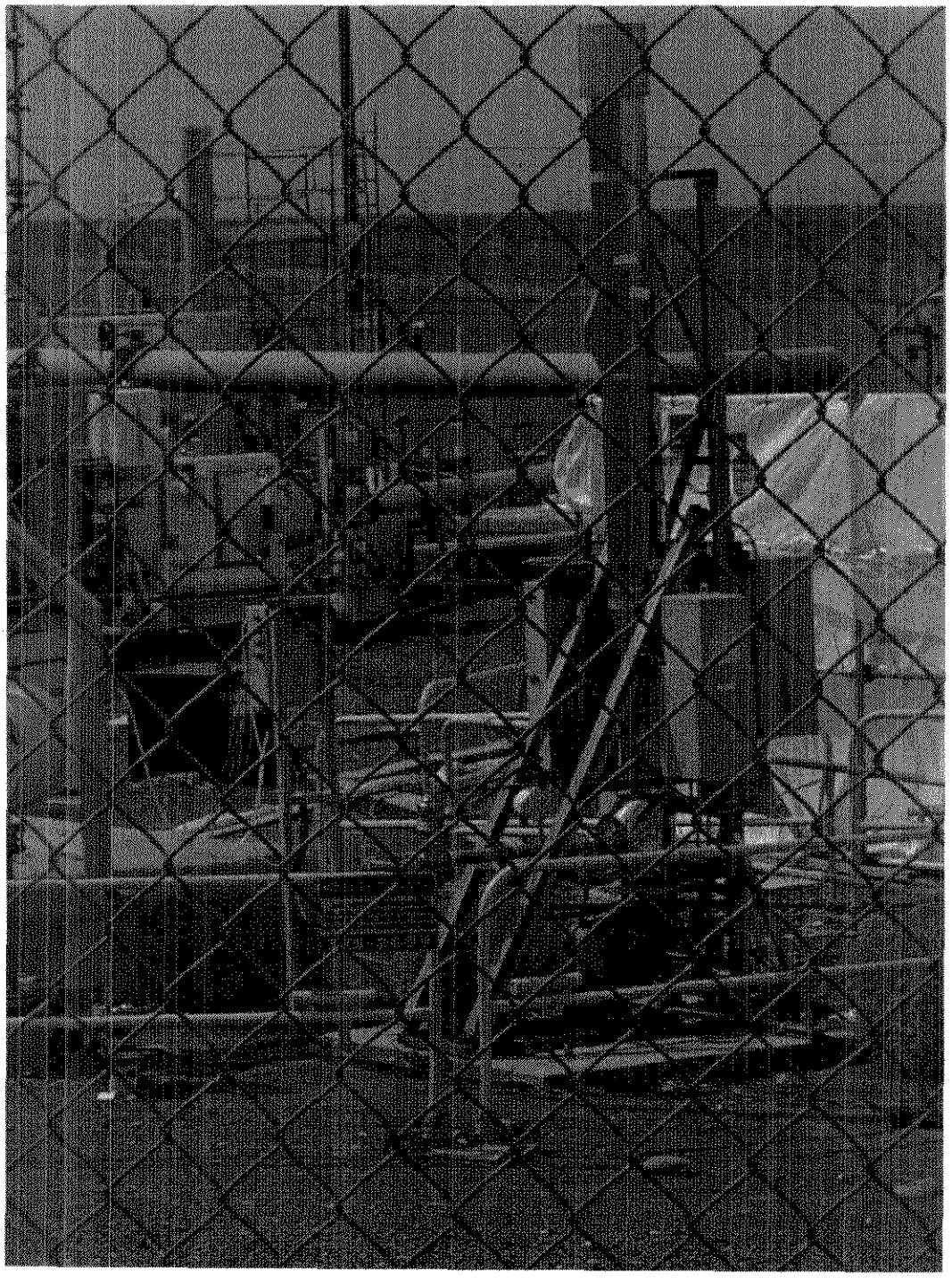

Figure 5: Closeup Photo of VMS on Tank C-103

discharges in the center of the stack, perpendicular to the flow. The stack flow induces flow from the breather vent and dilutes the tank vent air with ambient air before discharging from the stack. The intent is to reduce the concentrations of contaminants below levels identified by the Toxicology Review Panel. These levels were not identified in the Engineering Task Plan.

It was also noted that a survey of carbon vendors had been conducted during the engineering review and had concluded that the required amount of carbon, if used for vapor control, would be much higher than previously anticipated. The specific required amounts were not identified. Design conditions for the tank air at the inlet to the VMS include a temperature range of 80 °F to 100 °F, relative humidity of 100%, and flowrate of 5 cfm to 20 cfm.

It was stated in a letter from E.J. Lipke of Westinghouse Hanford Corporation to R.E. Gerton of the US Department of Energy, dated June 30, 1995, that the installation of a Vapor Treatment System had been completed on Tank C-103 on June 29, 1995. Results of the Acceptance Test Procedure were attached to the letter.

ECN 620758, dated May 8, 1995, was issued to apply heat tracing and insulation on the HEPA filter housing and on the tank vent hose from the HEPA filter housing to the inlet of the VMS.

ECN 620763, dated June 9, 1995, updated the design of the heat tracing and insulation.

ECN 710524, dated April 1, 2000, was issued to disconnect the VMS from the breather filter and to return the breather filter to its normal passive configuration. No reason was given for the decision to disconnect. Instructions to disconnect the heat tracing were included, indicating that it was still in use up to that time.

ECN 671764, dated March 19, 2002, was issued to remove the VMS from Tank C-103. It was stated that the VMS was currently inactive, electrically isolated, and abandoned in place.

The documentation available in electronic format fully describes the specifics of the VMS, the concept behind its operation, and the time period over which it was operated. The ECNs addressing heat tracing and insulation also indicate that moisture condensation was a concern. For example, it is stated in the March 1995 Engineering Task Plan that the failures of the passive adsorption canister system were most likely due to "accumulation of condensate inside the canisters until the inlet piping was covered."

An interview was conducted with Mike Harty and Jahan Lohrasbi on April 29, 2004. It was stated that the VMS system failed because of condensation of water which impeded air flow from the tank breather vent. The condensation caused the HEPA filter to plug, increasing the pressure drop across the filter and restricting airflow.

An interview was conducted with Dave Bowers on May 12, 2004. He confirmed that the problem with the VMS was condensation of moisture in both the HEPA filter and the hose between the filter and the VMS. The initial design review report had identified two methods of heating to prevent moisture condensation; 1) heat tracing and insulation, and 2) the use of an inline heater following the breather vent filter. It was decided to initially use the heat tracing approach. The inline heater was not implemented after the heat tracing and insulation approach failed.

2.3. High Efficiency Gas Adsorber

A high efficiency gas adsorber (HEGA) is in use in the AZ 702 exhauster to collect vapor phase pollutants. It has consistently failed to meet its collection performance requirements when tested.

Tank farms AY and AZ each have two double shell tanks. The primary ventilation from the headspace of all four tanks is ducted to a common exhauster – AZ 702. The standard exhauster configuration at the Hanford site consists of a heater, prefilter, two banks of HEPA filters, fan, and stack. The exhausters have been required by the Washington Department of Health (DOH) to comply with the specifications in ASME/ANSI AG-1, *Code on Nuclear Air and Gas Treatment*. AG-1 includes specifications for both particulate and gaseous contaminant collection. Most exhausters on the Hanford site have only had to include HEPA filters for particulate control. However, it was learned

during the interview with Mike Harty and Jahan Lohrasbi that DOH had concerns about possible arsenic emissions from the AY and AZ tanks. Therefore, DOH required the installation of a HEGA module in the AZ 702 exhauster. Subsequent testing by Hanford personnel demonstrated that the HEGA module was not needed to maintain arsenic emissions at acceptable levels, but DOH would not allow its removal.

A HEGA is a module of activated carbon. Figure 6 is a schematic flow diagram of the AZ702 exhauster system for the AY and AZ tank farms from RPP-15127 which shows the location of the HEGA modules in relation to the other exhauster components.

Figure 6: Schematic Flow Diagram of AZ702 Exhauster

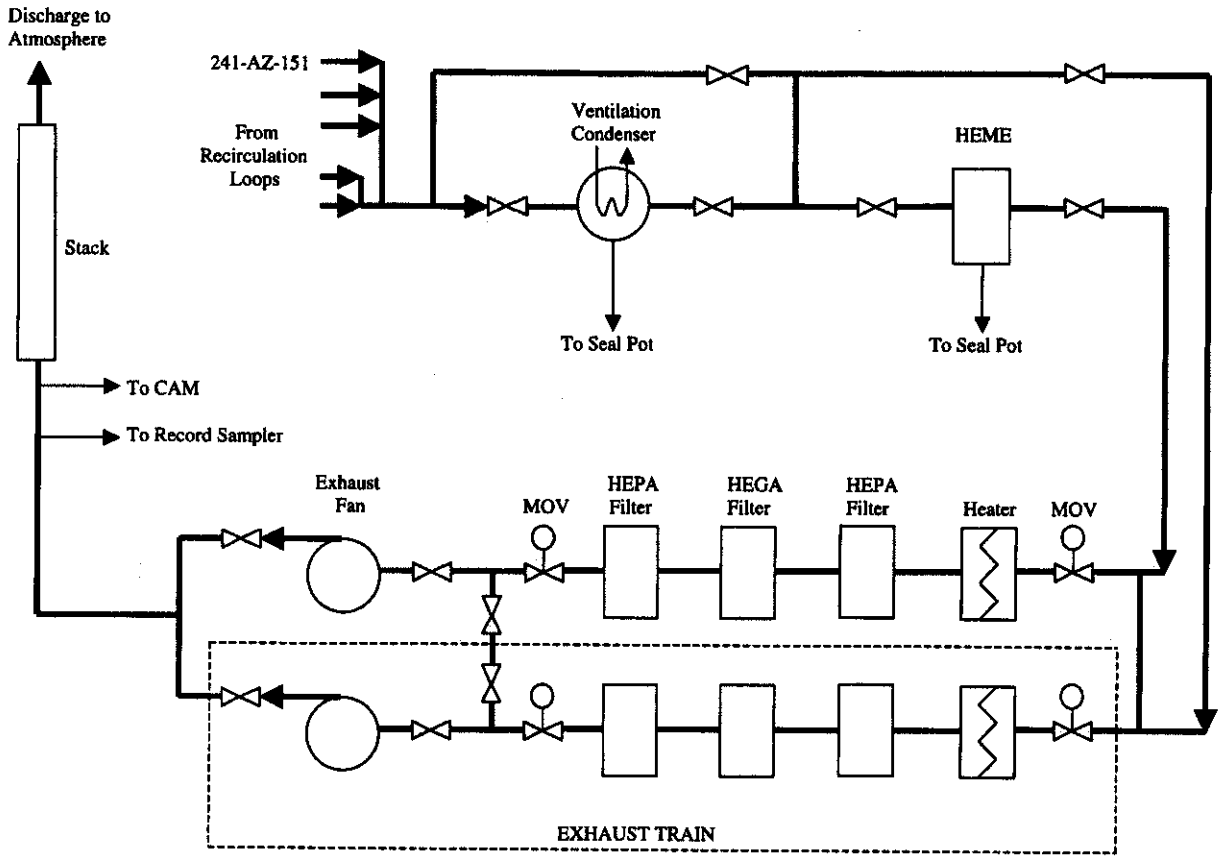

The HEGA modules are identified in the *Technical Basis For The 241-AZ-702 Vessel Ventilation System Operating Specifications*, dated November 2003 (RPP-12183) as Flanders Filters Model AG-GG16-62-NS. Each of these modules consists of cells with 2-inch thick activated carbon beds. Each module contains a total of 86 pounds of activated carbon. Thin bed carbon adsorbers such as these are commonly used for odor control or similar applications where very low loadings are expected. This would be a reasonable application for nuclear powerplant sources where the intent is to control infrequent emissions of radioactive iodine compounds.

Continuous venting of the headspaces of tanks containing organic compounds at temperatures above ambient and at high moisture content would be expected to saturate thin carbon beds relatively quickly. This was confirmed by information from Flanders Filters. A document identified as OA-ENG-293 is a copy of a FAX from Matt O'Neal of Flanders Filters to Gary Tardiff, dated March 28, 1996. It is stated that their carbon vendor determined the life of the HEGA module to be 1,500 hours (approximately two months) with the concentrations of contaminants provided by Tardiff. OA-ENG-367 is a table listing HEGA test results between July 2000 and February 2004. It appears that the HEGA was considered to have failed the test if the leakage and penetration exceeded 0.05%. The HEGA failed the test nine times and passed two times. There was one occurrence when the HEGA installed to replace a failed HEGA also failed the test. All of the failures occurred when the HEGA was operated for longer than two months. This is consistent with the information from Flanders and should be expected.

Although breakthough of volatile organics through the thin carbon beds should be expected in the time frames that are currently being observed, the testing methodology being used to determine collection efficiency may not be appropriate. The test method, which consists of challenging the carbon bed with a refrigerant gas in the air stream, and then measuring concentrations upstream and downstream of the carbon bed, appears to be intended to identify the amount of mechanical leakage. The determination of collection efficiency on the organic compounds being ventilated from the tanks, or the concentration of organic compounds passing through the carbon bed, is not measured directly by the test method and therefore cannot be inferred from the test results.

AG-1 defines a nuclear air treatment system (NATS) as "a system designed to remove radioactive gaseous and particulate contaminants from a near-atmospheric pressure gas stream..." It is described as containing HEPA filters and/or impregnated carbon adsorbers, along with other auxiliary components or accessories. Section FD addresses Type II adsorber cells (2-inch thick rectangular modules). It is specified that the adsorbers must meet the refrigerant leak requirements in FD-5330. This section requires that a refrigerant (specifically R-11 or R-12) be used to demonstrate a leak of less than 0.1% across the adsorber cell. The refrigerant is to be measured by an instrument that is essentially insensitive to hydrocarbons. Section FF addresses adsorbent media. It is applicable to adsorbent media used in cleanup systems for the removal of radioiodine compounds during and after an accident in a nuclear facility. AG-1 also references ASME 509, *Nuclear Power Plant Air-Cleaning Units and Components*, and ASME 510, *Testing of Nuclear Air Treatment Systems*.

The document identified as OA-ENG-297 is a copy of an e-mail provided by Mike Harty, dated March 30, 1999. There was discussion about the required collection efficiency and the difficulty in predicting the overall performance of the HEGA.

The document identified as OA-ENG-301 is a copy of several FAX's between Gary Tarfiff and Matt O'Neal of Flanders Filters between March 4, 1996 and June 6, 1996 concerning the flow conditions to the AZ702 exhauster and the expected HEGA life.

Subsequent to this evaluation, Operations found in June 2004 that a construction pancake in the drain line from the condenser in the AZ702 system had never been removed.

Therefore, moisture was not removed from the system at the condenser and this would have adversely affected the performance of the activated carbon in the HEGA modules.

3.0 CONCLUSIONS

Condensation of water was the cause of failure for both the Carbtrol and Vapor Mixing Systems. This was recognized as a problem and, in both cases, heat tracing and insulation were used in an attempt to prevent condensation. Both attempts failed. Documentation of the heat transfer sizing calculations could not be located, but is believed to exist. However, the amount of heat required in both cases would depend directly upon the air flow rate. This parameter can be highly variable and hard to predict for passively ventilated systems and could be the cause for undersizing the heat trace/insulation approaches. Conversely, the heaters used in the standard exhauster configuration have worked well to avoid condensation in the downstream HEPA filters. Therefore, direct inline heaters are able to prevent moisture condensation problems.

Reduction in performance of the HEGA activated carbon modules is almost certainly due to reaching or approaching the absorption capacity of the carbon. This conclusion is supported by the opinion presented by Flanders that the life of a HEGA module was expected to be about two months. The HEGA modules were actually kept in service for longer periods. This situation can be addressed in the existing AZ 702 system by installing more carbon modules (if feasible) or changing out more often. The use of the refrigerant leak testing method should be reviewed to determine if it is an appropriate measure of the collection efficiency for organic vapors.

Activated carbon systems considered for use on AN, AW, or C farms should be based on carbon beds conservatively sized for the anticipated loading. Continuous monitoring by an organic vapor analyzer, or similar instrumentation, should also be used to determine when breakthrough occurs. Multiple parallel activated carbon units should be used to allow a unit reaching breakthrough to be immediately taken offline and the airflow switched to a unit with new or regenerated carbon.

APPENDIX

RMIS Viewprint Document Cover Sheet

This document was retrieved from the Records Management Information System (RMIS). It is intended for information only and may not be the most recent or updated version.

Accession #: **D194023564**

Document #: **Not Available**

Title/Desc:
C103 BREATHER FILTER CHEMICAL VAPOR REMOVAL SYS

Pages: **1**

Westinghouse Hanford Company

Internal Memo

From: Single-Shell Tank Process Engineering 13220-89-0076
Phone: 3-1943 R1-51
Date: October 12, 1989
Subject: 103-C BREATHER FILTER CHEMICAL VAPOR REMOVAL SYSTEM

To: T. D. Blankenship S5-04

cc:	J. J. Badden	S5-03	D. L. Colley	R3-54
	R. J. Baumhardt	R2-40	G. L. Dunford	R1-51
	F. E. Boyd	S5-04	K. J. Moss	R3-08
	D. J. Calley	R3-54	R. E. Raymond	R2-40
	K. G. Carothers	R1-51	R. K. Tranbarger RKT	R1-51
			RTK:LB/File	

A system has been identified which would remove chemical constituents from the 103-C breather filter gas/vapor stream. This system utilizes the CARBTROL absorption drum design. Absorption media has been identified for organics, ammonia, and NO_x. The system will be sized for a minimum six month cycle life pending receipt of 103-C/102-C vapor sampling data. Tank Farm Plant Engineering is expected to provide this data within a few weeks.

Single-Shell Tank Process Engineering will modify the breather filter system to accomodate the CARBTROL system and will implement a monitoring program for organic, ammonia, and NO_x utilizing respiratory protection and Tank Farm Operations personnel.

R. T. Kimura, Manager

gjg

Hanford Operations and Engineering Contractor for the US Department of Energy

R01053

RMIS Viewprint Document Cover Sheet

This document was retrieved from the Records Management Information System (RMIS). It is intended for information only and may not be the most recent or updated version.

Accession #: **D194049130**

Document #: **ECN-146434**

Title/Desc:
CARBON ADSORPTION SYS

Pages: **8**

ENGINEERING CHANGE NOTICE

Page 1 of 9

1. ECN 146434

Proj. ECN

2. ECN Category (mark one)	3. Originator's Name, Organization, MSIN, and Telephone No.	4. Date
Supplemental ☐	RHETT TRANBARGER/SSTPE/R1-51/3-5549	4-25-90
Direct Revision ☐	5. Project Title/No./Work Order No. ESR 11793 (WB)	6. Bldg./Sys./Fac. No.
Change ECN ☐	CARBON ADSORPTION SYSTEM	241-C
Temporary ☐	8. Document Number Affected (include rev. and sheet no.)	9. Related ECN No(s).
Supersedure ■	H-2-90718 SH.1 REV. 2	146430 146433
Discovery ☐		
Cancel/Void ☐		

7. Impact Level	10. Related PO No.
3	N/A

11a. Modification Work	11b. Work Package Doc. No.	11c. Complete Installation Work	11d. Complete Restoration (Temp. ECN only)
■ Yes (fill out Blk. 11b) ☐ No (NA Blks. 11b, 11c, 11d)	2E-89-01829/W	Cog. Engineer Signature & Date	N/A Cog. Engineer Signature & Date

12. Description of Change

THIS ECN SUPERSEDES ECNs 146430 + 146433 IN THEIR ENTIRETY

ITEM ①: UPDATE NOTES

- DELETE NOTE 2
- NOTE 3 SHOULD READ:
  3. UNLESS OTHERWISE NOTED, DIMENSIONAL TOLERANCES SHALL BE; FRACTIONS ± 1/8" ; ANGLES ± 5°
- NOTE 8 SHOULD READ:
  8. WELD + INSPECT PER ANSI B31.3. VT FINAL PASS ALL WELDS, MT FINAL PASS WHERE DESIGNATED.

(ITEM ① CONT ON PG. 3)

13a. Justification (mark one)	13b. Justification Details
Criteria Change ☐	THIS ECN COMBINES ECNs 146430 + 146433 AND UPDATES THE "VAPOR REMOVING" BREATHER-FILTER DESIGN + PARTS LIST
Design Improvement ■	
Environmental ☐	
As-Found ☐	
Facilitate Const. ☐	
Const. Error/Omission ☐	
Design Error/Omission ☐	

14. Distribution (include name, MSIN, and no. of copies)

A.T. ALSTAD (1) R1-51
R.K. TRANBARGER (1) R1-51
D.P. KERWICK (1) S5-02
S.G. HODGE (1) R3-53
E.V. DOS RAMOS (1) S1-02
G.T. FRATER (1) S2-02
J.P. HAUPTMAN (1) S2-03

RELEASE STAMP

A-7900-013 (11/88)

ENGINEERING CHANGE NOTICE CONTINUATION SHEET Page 3 of 9 | 1. ECN 146434

ITEM ① (CON'T)

- ADD NOTES 9 THROUGH 15

9. USE TEFLON TAPE ON ALL THREADED PIPE JOINTS.

10. PRIOR TO SETTING PN-46 & PN-47 INTO PN-50, APPLY HEAT TRACE TO PN-46 & PN-47 PER NOTE 14.A, LEAVING ABOUT 4 FT. OF LEAD ON EACH END FOR SPLICES. ALSO, LAY 2" OF ARMAFLEX II SHEET INSULATION, 2" THICK HAVING A THERMAL CONDUCTIVITY OF 0.27 BTUH/INCH/SQ.FT./°F IN THE BOTTOM OF PN-50.

11. PNEUMATIC PRESSURE TEST ASSEMBLIES 37, 38, & 39 AT 3.5 +/- 0.5 PSIG PER HS-BS-0076, TYPE I, FROM PN-41 TO THE EXIT ELBOW AFTER PN-47. USE A GAUGE WITH AN ACCURACY OF +/- 2% OVER THE RANGE OF THE GAUGE.

12. ROTATE FLEX HOSE ATTACHMENT PARTS AS NEEDED TO MEET FIELD CONDITIONS.

13. FOR ASSEMBLIES 37, 38, & 39, INSTALL THE FLEX HOSE BETWEEN THE HEPA-FILTER HOUSING AND PN-46 AT A MIN. DROP OF 0.25"/FT.

14. APPLY HEAT TRACE TO ASSEMBLIES 37, 38, & 39, FROM PN-8 TO THE EXIT OF THE ASSEMBLY, USING THE FOLLOWING CRITERIA (ALSO SEE NOTE 10):

    A. HEAT TRACE PN-46 & PN-47 TO A POWER OF 200 - 300 WATTS.
    B. HEAT TRACE PN-5 TO A POWER OF 60 - 150 WATTS.
    C. HEAT TRACE THE REMAINING PARTS TO A POWER OF 4 - 10 WATTS/FT.
    D. USE A POWER CONNECTION KIT TO INITIATE POWER TO THE HEAT TRACE AT PN-8. USE SPLICE KITS AS NEEDED TO CONNECT THE HEAT TRACE AS A CONTINUOUS CIRCUIT. USE A SIGNAL LIGHT TO END THE HEAT TRACE CIRCUIT AT THE EXIT OF THE ASSEMBLY. (SEE ENN146432)

15. AFTER INSTALLATION OF HEAT TRACE, INSULATE ASSEMBLIES 37, 38, & 39 PER THE FOLLOWING INSTRUCTIONS (ALSO SEE NOTE 10):

    A. SECURE ALL INSULATION JOINTS WITH ARMSTRONG 520 ADHESIVE. APPLY PER MANUFACTURER'S RECOMMENDATIONS.
    B. USE ALUMINUM BANDS AS NEEDED TO HOLD THE INSULATION IN PLACE.
    C. FINISH THE WEATHER EXPOSED SURFACE OF ALL INSULATION WITH ARMSTRONG STANDARD WHITE COLOR. APPLY PER MANUFACTURER'S RECOMMENDATIONS.
    D. THE INSULATION SHALL NOT INTERFERE WITH THE REMOVAL OF ACCESS DOORS (HEPA FILTER HOUSING), OR THE OPERATION OF VALVES, OR DOP AND SAMPLE PORTS, OR THE MAINTENANCE OF ELECTRICAL EQUIPMENT.
    E. INSULATE THE EXTERIOR OF PN-46 & PN-47 WITH ARMAFLEX II SHEET INSULATION, 2" THICK HAVING A MIN. THERMAL CONDUCTIVITY OF 0.27 BTUH/INCH/SQ.FT./°F AT 75 °F MEAN TEMPERATURE. AN AIR SPACE BETWEEN 1" LAYERS IS ACCEPTABLE.
    F. INSULATE THE EXTERIOR OF PN-5 WITH ARMAFLEX II SHEET INSULATION, 2" THICK HAVING A MIN. THERMAL CONDUCTIVITY OF 0.27 BTUH/INCH/SQ.FT./°F AT 75 °F MEAN TEMPERATURE (SEE PART C ABOVE).
    G. INSULATE THE REMAINDER OF THE ASSEMBLIES FROM PN-8 (UNDER PN-6) TO THE EXIT OF THE ASSEMBLY WITH ARMAFLEX II SHEET OR PIPE INSULATION, 1" THICK HAVING A THERMAL CONDUCTIVITY OF 0.27 BTUH/INCH/SQ.FT./°F AT 75 °F MEAN TEMPERATURE (SEE PART C ABOVE).

A-7320-036 2 (11-88)

ENGINEERING CHANGE NOTICE CONTINUATION SHEET

Page 4 of 9

T. ECN 146434

ITEM (2): UPDATE PARTS LIST WHERE CLOUDED

Quantity									Part No.	Description	Mat'l/Ref	I.L.
								X	1	INSTALLATION	—	
							X		2	INSTALLATION	—	
		1				X		1	3	ASSEMBLY	—	
	1				X		1		4	ASSEMBLY	—	
1				1			1	1	5	AIR FILTER HOUSING ATMOSPHERIC BREATHING	SK-2-57236	2
1				1			1	1	6	4" BUTTERFLY VALVE	SEE NOTE 5	2
			1		1	1			7	1/4" BALL VALVE, SCREWED ENDS	ITT GRINNELL FIGURE #1660 SERIES SST	3
			AR		AR	AR	AR	AR	8	4" PIPE SCH 40	ASTM A53 TYPE S GR-B	3
			AR		AR	AR			9	1 1/2" PIPE SCH 80	ASTM A106 GR-B	3
			AR		AR	AR			10	1/4" NIPPLE x 2 1/2", SCH 80	ASTM A105 OR A181 CLASS 70	3
			2		2	2			11	1 1/2" PIPE NIPPLE SCH. 40 x 2 1/2"	STORES #45-5826-535	3
					1				12	12" FLANGE, BLIND 150# RF	ASTM A105 OR A181 CLASS 70	3
	1	1	1		1	2	1	1	13	4" FLANGE, SLIP-ON 150# RF	ASTM A105 OR A181 CLASS 70	3
				1			1	1	14	4" - 180° RETURN, BW SCH 40	ASTM A234 GR WPB	3
			1		1	1			15	1 1/2" TEE, 3000#, SCREWED	ASTM A105 OR A181 CLASS 70	3
			4		4	4			16	1 1/2" 90° ELBOW, SCH 40 THD, MI	STORES #45-1920-230	3
			1		1	1			17	4 - 3 1/2 x 1 1/2" THREDOLET 3000# STD WT	ASTM A105 OR A181 CLASS 70	3
			1		1	1			18	1 1/2" x 1/4" BUSHING REDUCING 3000# SCREWED	ASTM A105 OR A181 CLASS 70	3
			1		1	1			19	1/4" QUICK-CONNECT CPLG BODY, MPT BRASS	SWAGELOK B-QC4-BP	3
			1		1	1			20	1 1/4" PLUG, BRASS, MPT	SWAGELOK B-QC4-BP	3
	1	2					1	2	21	GASKET, 6 3/4" OD x 4" ID x 1/16" THK	GARLOCK 3000	3
8	8	8		8			8	8	22	BOLT, HEAVY HEX, 5/8" - 11UNC-2A x 5" L	ASTM A307 GR B	3
24	28	24		24			28	24	23	NUT, HEAVY HEX, 5/8" - 11 UNC- 2B	ASTM A563 GR A	3
							1		24	GASKET, 15" OD x 12" ID x 1/16" THK	GARLOCK 3000	3
			2		2	2			25	1 1/2" PIPE NIPPLE, SCH 40 x 4"L, CS	STORE #45-5926-560	3
AR	AR	AR		AR			AR	AR	26	WIRE CLOTH, 2" x 2" MESH 0.063" WIRE DIA.	McMASTER-CARR #92261415	3
1	1	1		1			1	1	27	8-3 x 1/2" THREDOLET, 3000# STD WT	ASTM A105 OR A181 CLASS 70	3
3	3	3		1			1	1	28	1/2" PLUG, SCREWED	ASTM A105 OR A181 CLASS 70	3

ENGINEERING CHANGE NOTICE CONTINUATION SHEET

Page 5 of 9

1. ECN 146434

ITEM 2 (CONT)

16	20	16		16			20	16	29	BOLT, HEAVY HEX, 5/8" - 11 UNC - 2A x 3 1/2" L	ASTM A307 GR B	3
				X					30	INSTALLATION		
1			X	1					31	ASSEMBLY		
			1						32	CONC. RED., 4" x 3" SCH. 40, BTWLD	ASTM A234 GR WPB, CS	3
			1						33	FLANGE, WELD NECK, RF, 3" CLASS 150, CS	ASTM A105 OR A181 CLASS 70, CS	3
				1					34	GASKET, 5 1/4" O.D. x 3" I.D. x 1/16" THK	GARLOCK 3000	3
			1		1	1			35	1/4" OIL LEVEL GAUGE, STRAIGHT POSITIVE VENTED	McMASTER CARR, CAT. 90, #1141K14	3
			1	1					36	HALF COUPLING 1/4" CL 150 THD	ASTM A105 OR A181 CLASS 70, CS	3
		X							37	INSTALLATION		3
	X								38	INSTALLATION		3
X									39	INSTALLATION		3
4	4	4							40	2" KING NIPPLE	ASTM A53 TYPE S GR-B	3
1	1	1							41	4" BLIND FLANGE	STORE #45-2373-325	3
4	4	4							42	CLAMP, HOSE, WORM DRIVE,	STORE #33-1270-290	3
AR	AR	AR							43	2" FLEX HOSE, PACIFIC-ECKO	SPIRALITE 2000 EPDM	3
5	5	5							44	2" PIPE x 8" L, THD BOTH ENDS	STORE #45-6886-255	3
3	3	3							45	2", 45° ELBOW	STORE #45-1916-255	3
1	1	1							46	ORGANIC ADSORBING CANISTER	CARBTROL MODEL G-1	3
1	1	1							47	AMMONIA ADSORBING CANISTER	CARBTROL MODEL GA-1	3
3	3	3							48	2", 90° ELBOW	STORE #45-1920-255	3
3	3	3							49	1/2" HALF-COUPLING, THREADED	ASTM A105 OR A181 CLASS 70, CS	3
2	2	2							50	SPILLTAINER	BONAR PLASTICS, SP55	3

ENGINEERING CHANGE NOTICE CONTINUATION SHEET

Page 6 of 9

1. ECN 146434

EM 3: ADD INSTALLATIONS 37, 38, & 39, DETAIL B, AND VIEW D-D

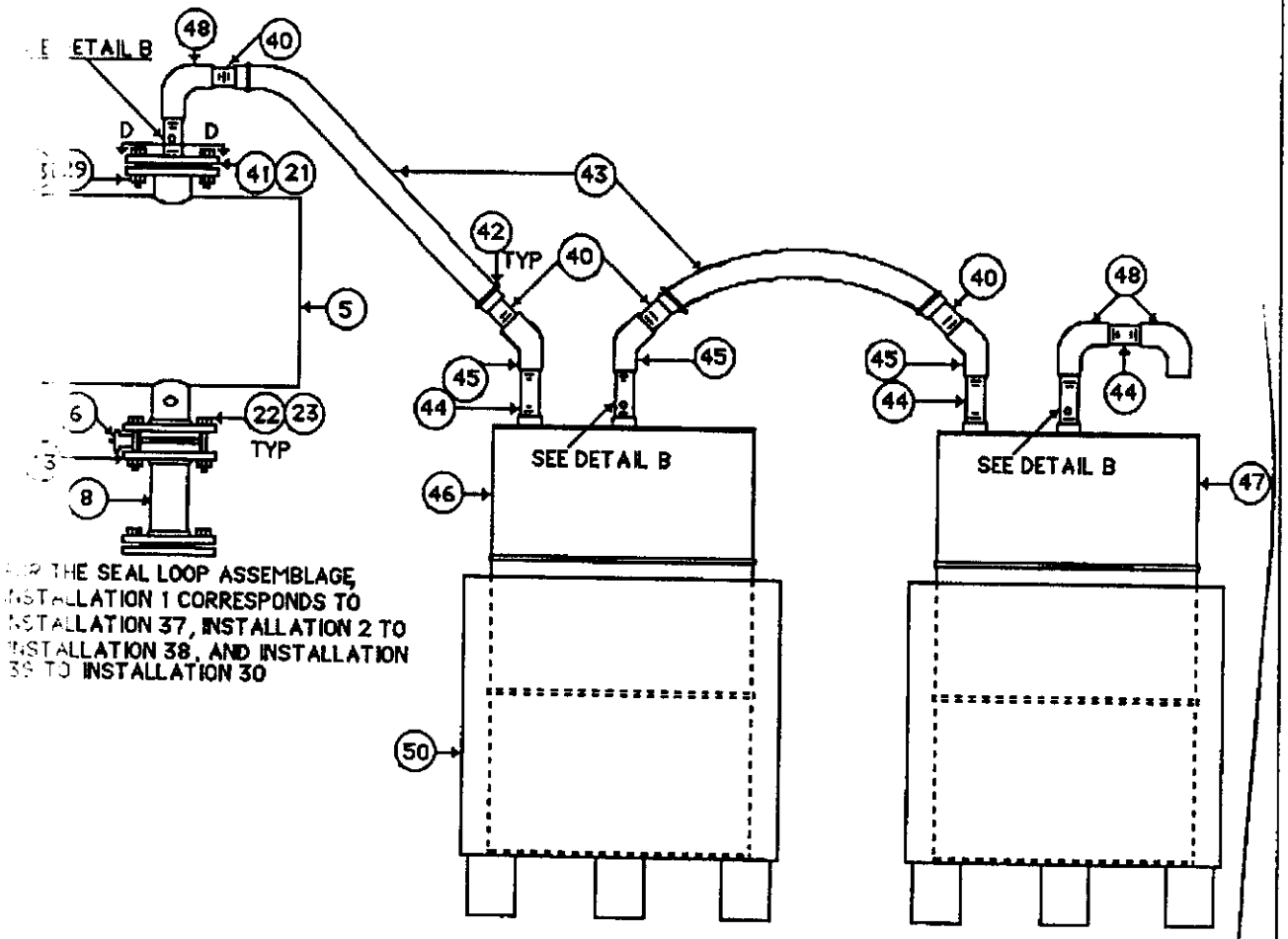

INSTALLATION 37 38 39
(NOT TO SCALE)

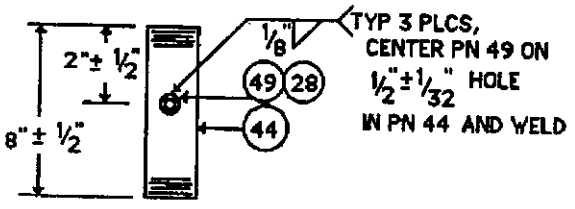

DETAIL B
(NOT TO SCALE)

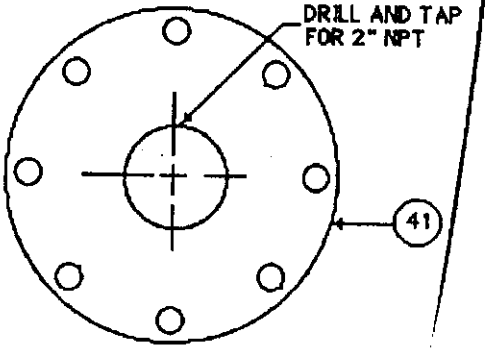

VIEW D-D
(NOT TO SCALE)

A-7320-036 2 (11-88)

NGINEERING CHANGE NOTICE CONTINUATION SHEET Page 7 of 9 | 1. ECN 146434

M (4): ADD ASSEMBLY 31, & REVISE ASSEMBLIES 3, 4, & VIEW B-B

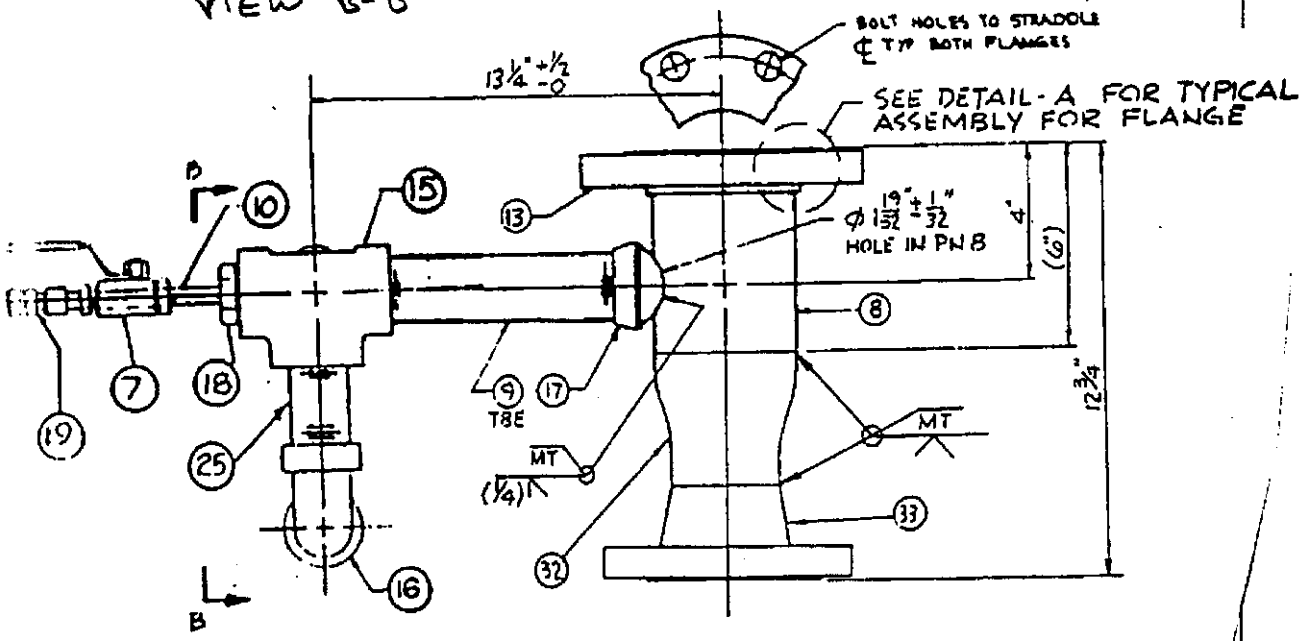

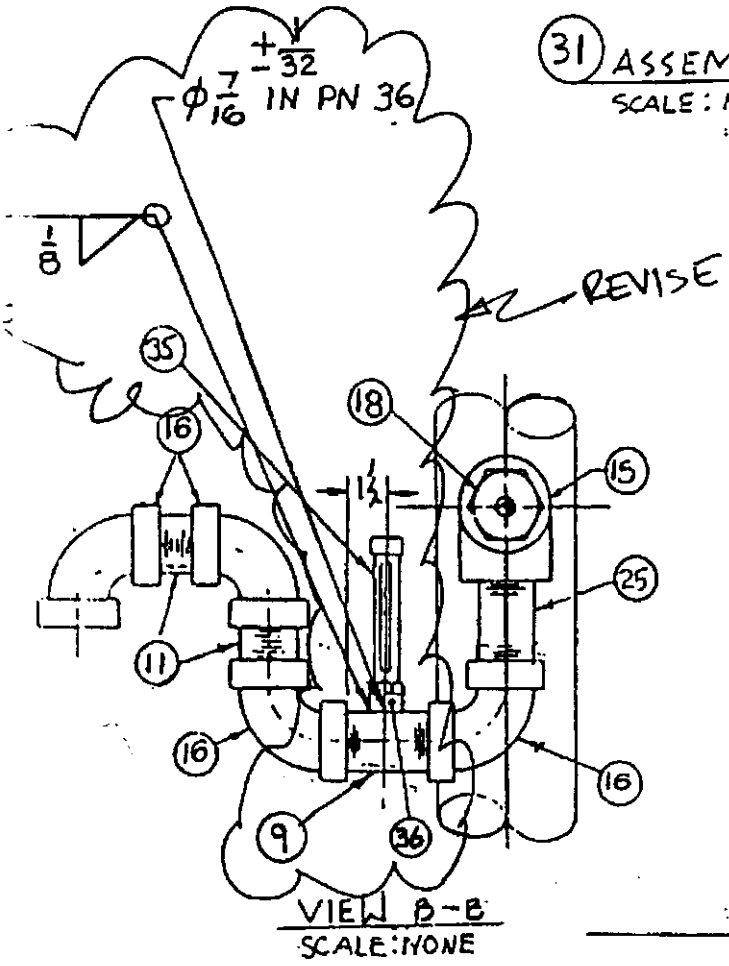

(31) ASSEMBLY
SCALE: NONE

NGINEERING CHANGE NOTICE CONTINUATION SHEET

Page 8 of 9

1. ECN 146434

14 (CONT)

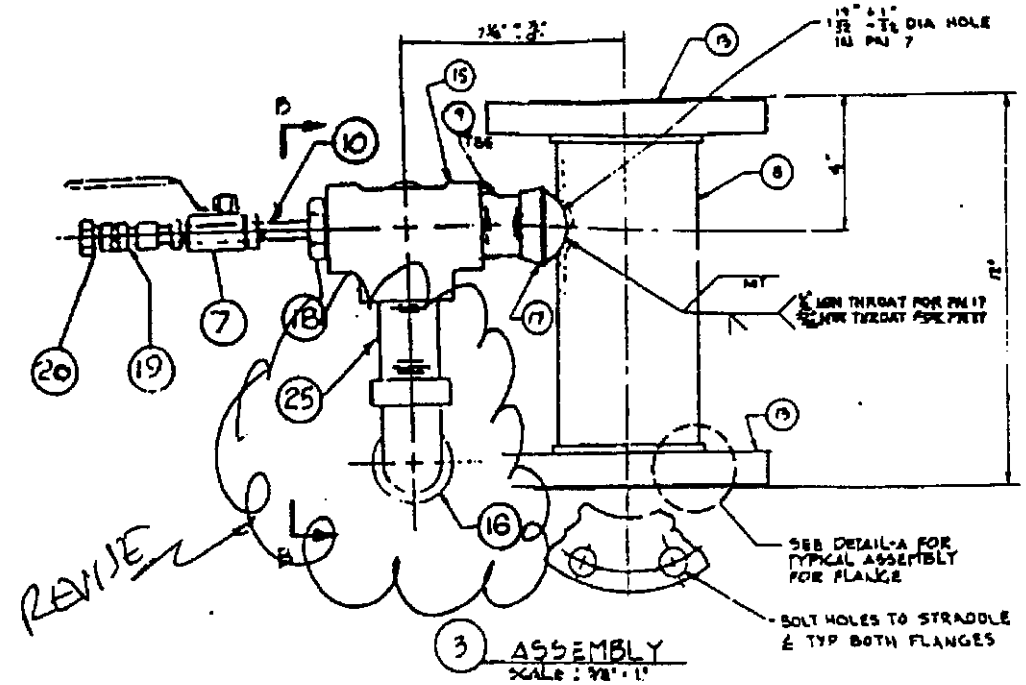

3 ASSEMBLY
SCALE : 3/8" = 1"

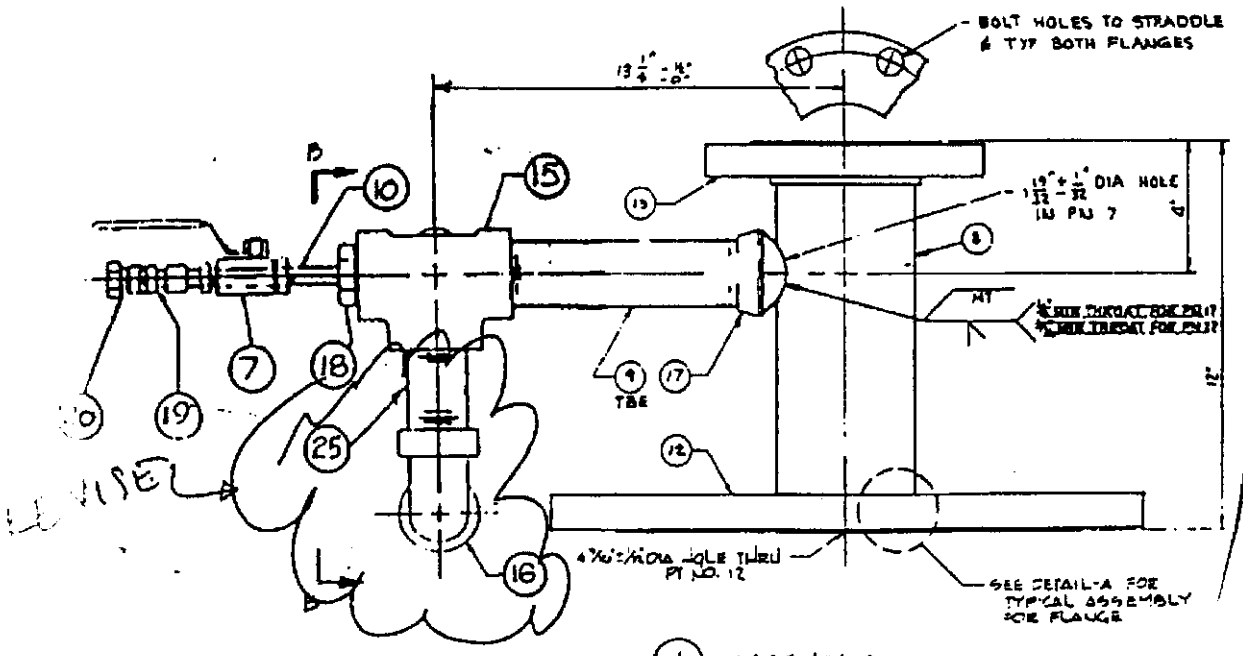

4 ASSEMBLY
SCALE : 3/8" = 1"

ENGINEERING CHANGE NOTICE CONTINUATION SHEET

Page 9 of 9

1. ECN 146434

EM (5): ADD INSTALLATION 30 (SEE CLOUDS)

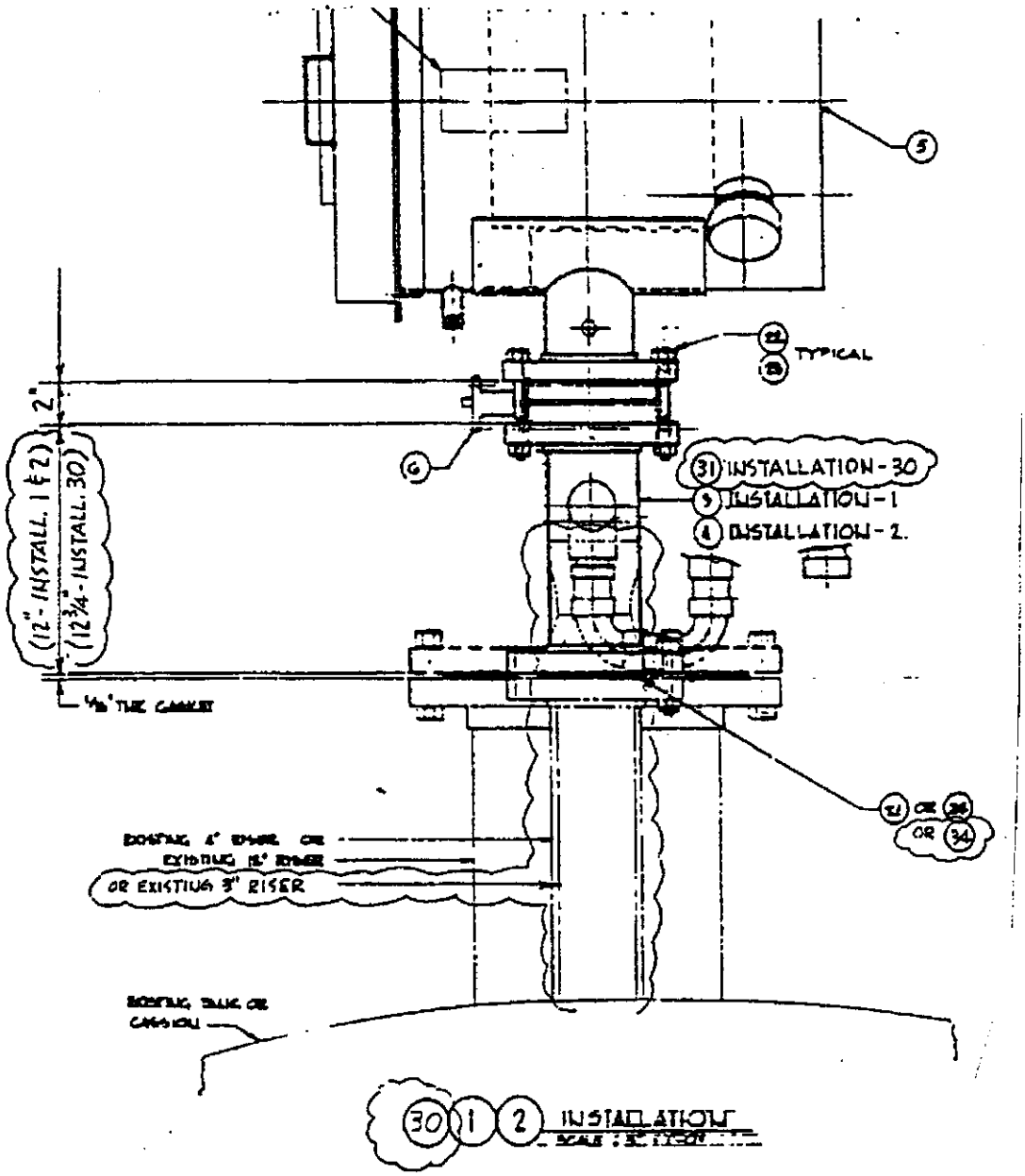

TCSRC-101 C-103

RPP-22171 Rev 0

QA-ENG-234

HANFORD ENVIRONMENTAL RESTORATION PROGRAM SUPPORT

TANK 241-C-103
HAZARDOUS VAPOR EXHAUSTER

September 29, 1992

Submitted by:

EBASCO ENVIRONMENTAL
A Division of EBASCO SERVICES INCORPORATED

and

HARTCROWSER

Order No. MLW-SVV-037106
with
Westinghouse Hanford Company

DRAFT

EXECUTIVE SUMMARY

Tank vapor odors have been present at the Hanford Site tank farms since waste storage activities began, but a July 3, 1987 exposure of three Hanford Site employees at tank 103-C demonstrated the seriousness of the exposures to particular tank vapors. Following this lost time accident, access to the site was limited, numerous vapor samples were taken, and eventually supplied air was required for all personnel working in the area. Corrective action included the addition of the present breather system consisting of a high efficiency particulate air (HEPA) filter and two carbon filters. This breather system was installed in 1989 but has not prevented further reported vapor exposure incidents, consequently the tank farm workers are still using supplied air. A limited study was performed to review existing data relative to these releases and recommend a simple system to prevent further exposures.

To do this, the system must meet the following three requirements: (1) maintain a negative pressure in tanks 101-C, 102-C, and 103-C to prevent uncontrolled vapor releases; (2) remove all hazardous vapors in an exhaust stream prior to releasing this stream to the atmosphere; and (3) provide a flow of air through the three tanks to preclude the possible build up of flammable vapors.

A low volume exhaust system is proposed to satisfy these requirements. This exhaust system will consist of a HEPA filter to trap radioactive

particles, refrigerated coils to condense tank vapors, two carbon filters in series to absorb vapors not trapped by the condenser, and an exhaust fan to maintain a negative pressure in the tank. Inlet air to the tanks will pass through a HEPA filter and a control valve capable of maintaining the desired tank negative pressure. Safety features will be included to prevent exceeding the negative pressure limitations in the tanks and to provide warning of possible equipment failure. The equipment exposed to the radioactive exhaust stream will be located in close proximity to the riser to facilitate decontamination. This will minimize potential worker exposure during both operations and maintenance. Provisions will be made to maintain a filtered breather system for use during power outages, in the event of equipment failure, and during maintenance.

TABLE OF CONTENTS

1.0 INTRODUCTION 1

2.0 OBJECTIVES 2

3.0 BACKGROUND 2

4.0 DESIGN CONSIDERATIONS 5
- 4.1 OBJECTIVES AND SPECIFICATIONS 5
  - 4.1.1 Objectives 5
  - 4.1.2 Specifications 6
- 4.2 LEAKAGE DETERMINATION 7
- 4.3 CASCADE LINE ASSESSMENT 9
- 4.4 SELECTING THE COMPONENTS 9
- 4.5 SAFETY SYSTEMS 10
- 4.6 PERMITTING PROCESS 10

5.0 PROPOSED EXHAUSTER SYSTEM DESCRIPTION 10
- 5.1 SIZING CRITERIA 13
- 5.2 OPERATIONAL CONSIDERATIONS 14
- 5.3 COMMERCIAL AVAILABILITY 14

6.0 RECOMMENDATIONS 16

7.0 REFERENCES 17

LIST OF FIGURES

Figure 1. Existing Breather System 4

Figure 2. Air Balance Chart 8

Figure 3. Low Flow Exhaust System 11

Figure 4. Flow Schematic 15

1.0 INTRODUCTION

The following information is in response to a request to review the existing tank 103-C ventilating system and to recommend a simple system to prevent leakage of hazardous gas from this tank. It is not the intent of this study to examine and document past vapor exposures since these incidents have been investigated and documented in numerous studies. The intent is to review existing data and recommend a system that will prevent future exposures, lower the risk to workers at the 241-C Tank Farm, and reduce or eliminate the requirements for protective breathing equipment.

Tank vapor odors have been present at the tank farms since Hanford Site waste storage activities began, but a July 3, 1987 exposure of three Hanford Site employees at tank 103-C, which resulted in lost time accident, demonstrated the seriousness of exposure to vapors from particular tanks. The three workers were troubleshooting a tank 103-C portable exhauster in close proximity to the discharge from a tank sampling pump. A strong odor was noticed but work continued; after approximately 15 minutes, the workers developed headaches and respiratory problems. Two of the workers were transported to the hospital and treated for breathing passage irritation. Both of these workers were off work for extended periods (7 weeks and 13.5 weeks). Air sampling following the exposure indicated that ammonia was the probable cause of the irritation.

Subsequent, but less severe exposures occurred at or near the 241-C Tank Farm on July 15, 1987; January 6, 1989; August 16, 1989; and March 15, September 6, and September 16, 1991. Following an investigation of the July 3, 1987 occurrence, access to the site was limited, numerous vapor samples were taken, and eventually supplied air was dictated for all personnel working in the area. The vapors were identified as predominantly ammonia and various organic vapors. Corrective action included the addition of a tank breather system consisting of a high efficiency particulate air (HEPA) filter and two carbon filters (Carbtrol)®.[1] This breather system was installed in

---

[1] Carbtrol is a registered trademark of the Carbtrol Corporation, Westport, Connecticut.

1989 but has not prevented further reported vapor exposure incidents and the tank farm workers are still using supplied air.

2.0 OBJECTIVES

The primary objective of this study is to conceptually develop a system that will prevent further hazardous vapor exposures by maintaining a negative pressure in tanks 101-C, 102-C, and 103-C. It must also remove all hazardous vapors in the exhaust stream prior to release to the atmosphere. A flow of air through the tanks is required to preclude the possible build up of flammable vapors. Westinghouse Hanford Company has directed that this flow should be at least one volume change of the vapor space in each tank per day.

Secondary objectives are to (1) extend the life of filters that might be used by minimizing the quantity of vapor to reach them (2) demonstrate the capability to reduce the radioactivity in the condensate stream so it can be treated as hazardous waste rather than as mixed waste.

3.0 BACKGROUND

The tanks in the 241-C Tank Farm were constructed in 1943 and 1944 and are of the same basic design as all of the large Hanford Site single-shell waste tanks (reinforced concrete shell with a carbon steel liner that covers the bottom of the tank and extends up the wall to just above the design liquid level). Tank 103-C is one of twelve 75-ft inside diameter waste tanks in the C Tank Farm. Four 20-ft inside diameter tanks are also located in this farm. All tanks in this farm have been isolated by capping the pipes to and from each tank with the exception of a 3-in. underground cascade line that connects the tanks in sets of three (101-102-103, 104-105-106, 107-108-109, and 110-111-112). Tanks 105-C and 106-C are high heat tanks that are air cooled by one high volume exhauster which is connected to the tanks by above ground ducts. Tank 106-C is adjacent to tank 103-C and tank 105-C is adjacent to tank 102-C. Tank 101-C is an assumed leaker; no indication of tank 102-C or 103-C leakage has been detected in the monitoring wells. Tank 103-C has been experiencing a slight drop in liquid level but an analysis of this loss

determined that it is being caused by evaporation of tank fluids that are being vented through the HEPA and Carbtrol® filters. The condition of the cascade lines is unknown.

The leak tightness of the unlined portions of the reinforced concrete walls and the unlined dome is also unknown. Consequently a leak test is required for the tanks and associated equipment to determine the size of an exhaust system capable of creating a negative pressure in all three tanks.

Very little is known about the volume and nature of the vapor releases associated with tank 103-C. The present assumption is that releases are caused by both the evaporation of organics and changes in atmospheric pressure that causes the tank to "breathe." The low radiation levels in the tank and the current 2 to 3% of lower flammability limit readings support this assumption. Tank vapors have been sampled and analyzed to determine the source of the toxic gases that have been vented to the atmosphere. Based on samples taken in 1988, the vapors present in the highest concentration in the tank were ammonia, magnesium, acetone, 2-butanone, 2-hexanone, and 4-methyl-2-pentanone. Samples have recently been taken and are being analyzed. Attachment 1 discusses the vapor components in more detail.

At the present time, a passive breather filter consisting of a two stage HEPA filter to trap radioactive particles and two Carbtrol® filters in series to absorb hazardous gas vapors is installed on tank 103-C (Figure 1). This system was placed in service on December 20, 1989. It does not have a moisture separation system but has been heat traced in an attempt to prevent moisture build up in the Carbtrol® filters. The first Carbtrol® filter is activated charcoal and the second Carbtrol® filter is activated charcoal treated to absorb ammonia vapors.

All known openings to tanks 101-C, 102-C, and 103-C have been sealed, with the exception of a 3-in. diameter underground cascade line between the tanks. All activities in the vicinity of these tanks are being performed by personnel using protective clothing and supplied air.

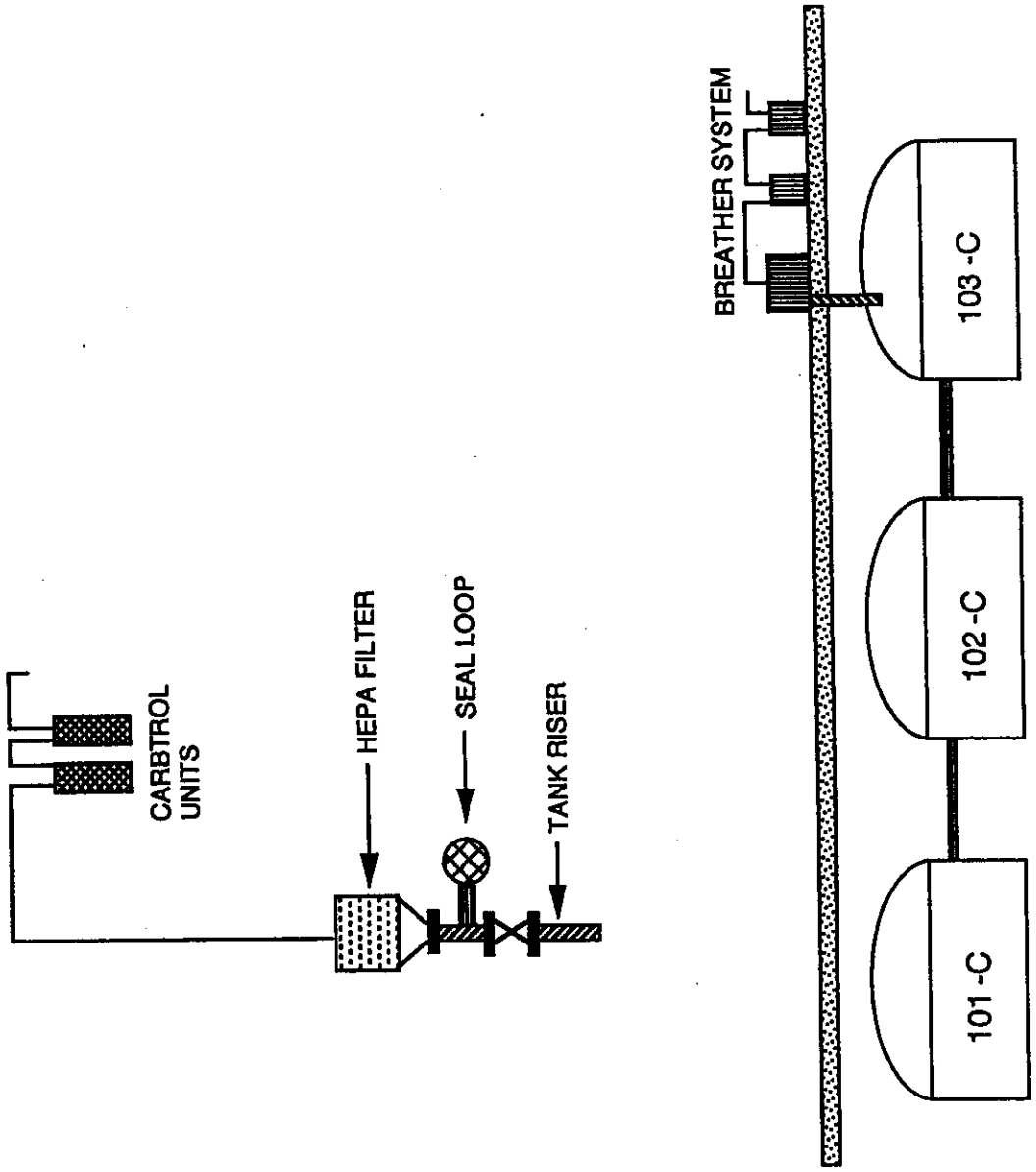

Figure 1. Existing Breather System.

4.0 DESIGN CONSIDERATIONS

To gain a better understanding of system design requirements, all available records were obtained and reviewed. This included tank farm work request, documents from the tank farm files, historical data from the Seattle archives, and several reports on this subject. Meetings were held with individuals knowledgeable with the past history of tank 103-C and with individuals knowledgeable about plans for a proposed sample support exhaust system. The design of an existing portable blower system was reviewed and the advantages and disadvantages of these units were discussed with tank farm personnel. Based on this research, the following is proposed.

4.1 OBJECTIVES AND SPECIFICATIONS

4.1.1 Objectives

As stated previously, the principal objective of this project is to prevent further hazardous gas releases from tanks 101-C, 102-C, and 103-C by maintaining these tanks at a negative pressure with respect to the atmosphere.

A secondary objective may be to use the system to demonstrate that a larger unit of the same basic design could be used to condense large quantities of fluid from waste tanks and reduce the radioactivity of the fluid being removed. This could be accomplished by locating a condenser downstream of the HEPA filter. The intent is to reduce the level of radioactivity in the condensed fluid so it can be treated as hazardous rather than mixed waste.

As noted previously, properly sizing the exhaust system requires detailed knowledge of the sources of in-leakage and flow rates through these paths under operating conditions. For the purpose of this scoping study a preliminary estimate of 75 cfm per tank was assumed. Prior to design a more detailed study as described in Section 4.2 will be required.

4.1.2 Specifications

The *Operating Specifications for Single-Shell Waste Storage Tanks* will be the governing document for the detailed design criteria of the system (Boyles, V.C., 1992). This document establishes structural limitations, radiological containment requirements, cross connection requirements, and leak detection criteria for single-shell tanks.

The structural limitations and radiological containment requirements are the items of most concern for tank 103-C. One structural limitation for each tank is a maximum of 100 tons live load over the tank. The location of the proposed exhaust system is dependent on the tank riser to be used and it may turn out that the system won't be located over the tank. If it is located above the tank, the weight of the exhauster system will have to be factored into the total live load on the tank dome. Vapor space pressure must also be considered in the design of the exhauster system. For a positively ventilated tank, the operating specifications limit the vapor pressure to a maximum of -0.1 in. wg and a minimum of -5.9 in. wg. The specifications also require a seal loop designed to limit tank vapor space pressures to -4 ± 1 in. wg during passive ventilation.

As low as reasonably achievable (ALARA) radiological containment must be included in the design of the exhauster system. To meet this requirement, the operating specifications require a two stage HEPA filter to be installed at both the inlet and outlet of an actively ventilated tank. Good design practice dictates that this filter be located as near as possible to the tank outlet to minimize duct surface area exposed to the tank vapors.

Additional cross connections are not anticipated as part of an exhauster design. The three tanks have been isolated so the only connections between the tanks are the cascade lines. The leak detection system at the 241-C Tank Farm consists of dry wells and liquid level gages that will continue to be monitored for leaks. The system will be operated at a negative pressure upstream of the fan so external leakage will not occur while the system is operating; however the system must be designed to be leak tight since it will function as a passive breather when it is not operating.

4.2 LEAKAGE DETERMINATION

A number of factors must be considered in sizing the exhauster; foremost is the amount of air that will leak into the tanks when they are maintained at a negative pressure. A study has been made to determine the most likely amount of leakage into single shell-tanks. The portion of the study related to tanks 101-C, 102-C, and 103-C will be independently reviewed and discussed with tank farm personnel to help assess the leak rate and evaluate the impact of future activities. Regardless of the results of this study, a test is required to determine the actual collective leakage rate of the three tanks. Ideally, an existing exhauster would be used to support this test but will require negotiations with regulatory agencies to gain approval for a short term release of potentially hazardous vapors. If approval cannot be obtained to vent vapor downstream of the HEPA filter directly to the atmosphere, (possibly combined with the existing tank 105-C and 106-C exhaust stream) a test setup using the existing Carbtrol® filters could be constructed. The test would require pressure readings in the tanks and flow measurements of the exhaust stream. From this data, a fairly accurate estimate of the tank leakage rates could be made. This test must be performed under controlled conditions to prevent further exposures.

An additional factor is that the flow capacity of the cascade line between any two tanks is between 150 and 175 cfm when the downstream tank is at -3 in. wg (the lowest allowable pressure based on a seal loop specification of -4-in. ± 1-in. wg during the passive ventilation mode). The air balance chart (Figure 2) shows the exhauster on tank 103-C and the inlet on tank 101-C. This is the best configuration since it creates air flow through all three tanks and tank 103-C vapors are not drawn into tank 101-C or 102-C. In this configuration, the maximum combined leakage of tanks 101-C and 102-C could not exceed 150 - 175 cfm. If the exhauster is moved to tank 102-C, the maximum leakage that could be accommodated would be 150 - 175 cfm each for tanks 101-C and 103-C. For leakages in any one tank in excess of the flow capacity of the cascade line, the exhauster must be located on that tank or an above ground duct must be used to vent that tank directly to the inlet of the system.

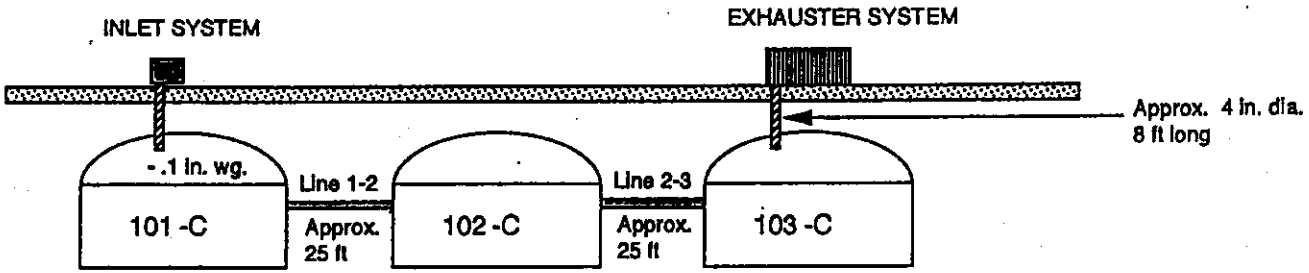

FILTERED INLET SCFM	TANK 101-C IN-LEAKAGE SCFM	TANK 102-C IN-LEAKAGE SCFM	TANK 103-C IN-LEAKAGE SCFM	TANK 103-C SAMPLING AIR ADDITIONS	TOTAL AIR ADDITIONS SCFM	FRICTION LOSS 1-2 IN. WG.	FRICTION LOSS 2-3 IN. WG.	TANK 103-C PRESSURE - IN. WG.	FRICTION LOSS TO CONDENSER
0	50	50	50	0	150	.2	.6		
0	75	75	75	0	225	.4	2.23	-3	-4
0	0	175	0	0	175	0	3.1		

(The actual leak rates must be determined, values shown are for illustration only)

This air flow chart was prepared to determine the various options available in sizing an exhaust system and to evaluate various locations of the inlet and outs for this system. It quickly became apparent that the cascade line were the constraining factor when the inlet was located on 101-C and the exhauster on 103-C. The lowest pressure that can be created in tank 103 and still meet the operational design criteria for the seal loop (4 ± 1 in. wg) is -3 in. wg . If it is assumed that the tanks 101 and 102 leak at an equal rate and that the cascade lines are not restricted, the limitation would be 75 to 85 cfm for tanks 101 and 102. It was also determined that the maximum flow between adjacent tanks through the cascade line is 150 to 175 cfm assuming that -3 in. wg is the lowest allowable negative pressure in the tanks and that the cascade line are fully open. This indicates that the location of the exhauster on 102-C would accommodate larger tank leakage. Leakage in excess of 175 cfm per tank would mandate the use of above ground ducts.

Figure 2. Air Balance Chart.

4.3 CASCADE LINE ASSESSMENT

A key feature of the proposed design is the use of the cascade lines as exhaust ducts. The flow capacity of the cascade lines will be determined during the tank leak test. If the flow through the cascade lines is insufficient to create a negative pressure in the upstream tanks, above ground ducts will be required.

4.4 SELECTING THE COMPONENTS

A cursory review of vendor data did not identify any off-the-shelf units that meet the proposed exhauster design requirements, but individual components can be adapted for the design. The fastest way to obtain a system would be to select a manufacturer who is building suitable components and design a system around these components. Existing demisters and HEPA filters in use at the tank farm will become candidates for use with this new system. Based on 1988 vapor samples, it appears that all components upstream of the condenser will be subjected to a strongly caustic vapor stream; this will need to be considered when selecting components.

The existing Carbtrol® units would be duplicated in the new system and a manifold system would be designed to allow redundancy and operational change out to units. Modifications may be made to the treatment of the carbon in these filters when it is determined what remains in the vapor after passing through the air-to-refrigerant condenser at 38 °F. A study by Erik Neilsen based on gas samples taken in 1988 indicates that, with minor exceptions, ammonia will be the only vapor not removed by the condenser (Attachment 1). As more tank vapor samples become available, it will be possible to update this study.

When the desired flow rate has been determined, calculations will be made to determine the flow resistance in the system and an exhauster fan will be selected. The need for an exhaust stack will be evaluated. If it can be demonstrated that the condenser, filters, and safety monitoring systems are effective, it may be possible to eliminate the exhaust stack.

4.5 SAFETY SYSTEMS

The *Operating Specifications for Single-Shell Waste Storage Tanks* lists a number of safety features to be considered in the design and operation of a positive ventilation system (Boyles, V.C., 1992). A seal loop and an exhauster fan designed to prevent excessive negative pressurization of the tank are required. Inlet and outlet HEPA filters equipped with differential pressure sensors, exhaust stack monitors and alarms, and interlocks to shut down the exhauster fan are required to prevent the release of radiological contamination.

Additional safety features required are a flammable gas detector in the vapor stream and a hazardous gas detector downstream of the Carbtrol® filters. The selection of the hazardous gas detector is dependent on a failure analysis of the Carbtrol® filters in the existing gas stream. Preliminary indications are that ammonia will be the predominant vapor reaching the Carbtrol® filters.

4.6 PERMITTING PROCESS

Since the intent of installing a positive exhaust system on tank 103-C is to reduce an existing hazardous gas release source, the permit approval process should be straightforward. It can be initiated by filing a "Notice of Construction" with the Washington Department of Ecology. Experience indicates that since this system will reduce or eliminate a known hazardous source, a waiting period, if required, would by relatively short; 60 days or less. A follow up clean air permit may be required since an exhaust system is being added, but this also would be based on a reduction or elimination of a known source.

5.0 PROPOSED EXHAUSTER SYSTEM DESCRIPTION

Figure 3 shows the exhauster system proposed for tank 103-C. Referring to Detail A of this figure and starting at the tank riser, the following components are found: an isolation valve located on the tank riser being used for the exhauster; a seal loop located between the tank and the isolation

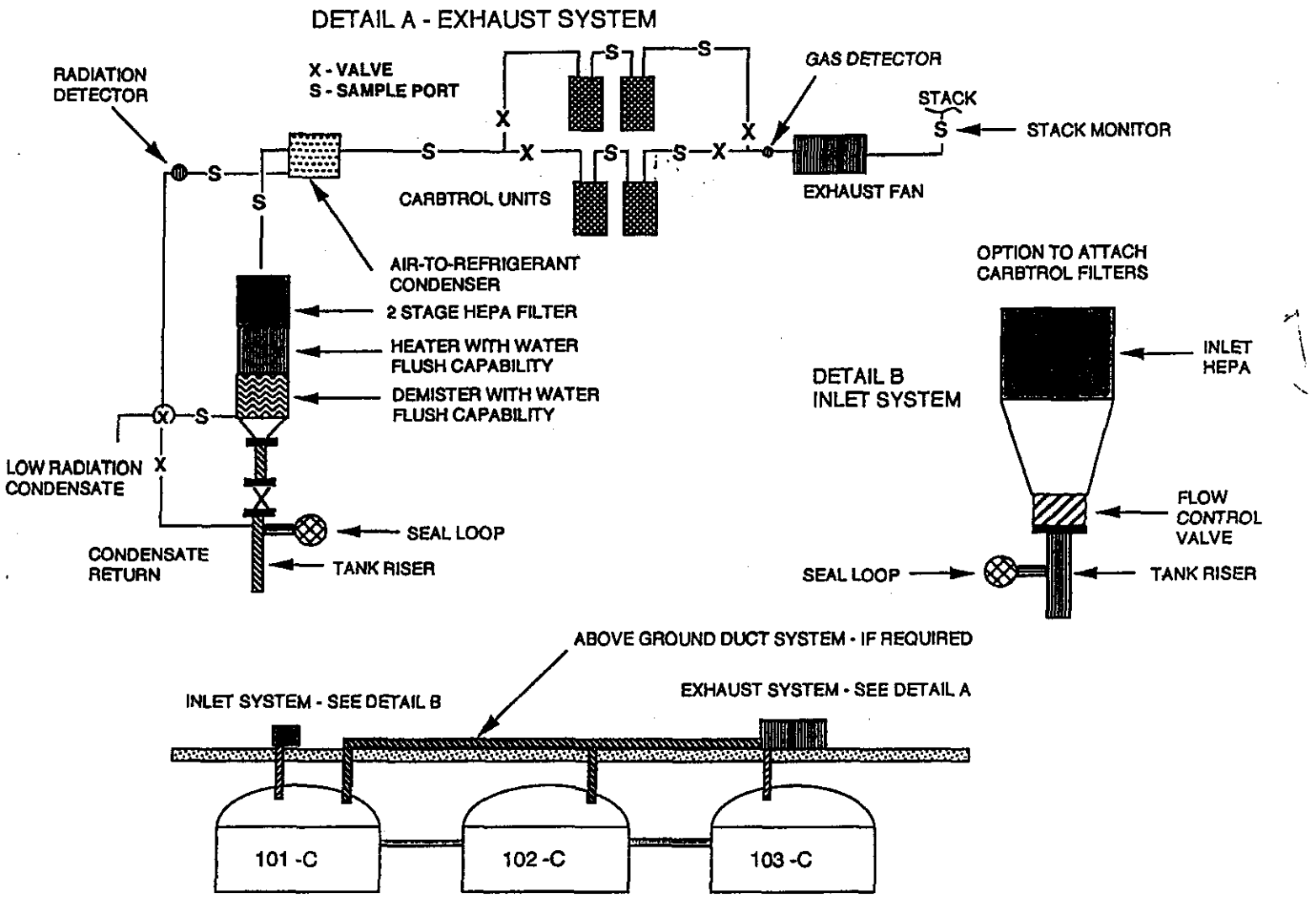

Figure 3. Low Flow Exhaust System.

valve as a safety feature to control out of tolerance negative pressures in the tanks; a transition duct to carry the exhaust stream to a moisture separator (demister) and then to a heater section insuring that unsaturated air enters the HEPA filter, which is next in line; a condenser where cooling coils will condense tank vapors; two Carbtrol® filters in series to absorb vapors not trapped by the condenser; an exhaust fan, and a stack (if necessary).

One advantage of this system is that the air-to-refrigerant condenser will greatly reduce toxic vapors in the exhaust stream. This will reduce the amount of vapor reaching the Carbtrol® filters extending the life of the filters and also reducing maintenance.

Another feature is use of the HEPA filter to remove radioactive particulates prior to condensing the vapors. This may allow the condensate to be classified as hazardous waste rather than mixed.

The demister and heater will be located vertically as shown in Figure 3. This will provide the least surface area for the accumulation of radioactive particles and will allow a water flush to be used to clean these units, if required. The water flushing would be performed during maintenance with the exhaust fan shut down. Proper positioning will also allow the condensate from the condenser and demister to be returned to the tank.

Two Carbtrol® filters in series will be online at one time and backup filters can also be placed online. This allows filters to be replaced without shutting the exhauster down. Standard Hanford Site HEPA tests require uniform injection of dioctylphthalate (DOP) or other test aerosols upstream of the filter; this must be taken into account when designing the ducts.

Sample ports will be provided at all locations where a change in the character of the exhaust stream might occur. This includes a sampling port in each condensate stream. The sampling ports upstream, between, and downstream of the Carbtrol® filters will be used to establish the life expectancy of the filters. A gas detector downstream of the Carbtrol® filters will be utilized as a safety control to shut down the exhauster. The existing gas stream will be sampled to determine the most likely gas to penetrate a failed filter and

the detector or detectors will be selected to match this requirement. The system will be designed to eliminate any ignition sources and a flammable gas detector will be installed to alert the operators of possible hazards.

In the event of equipment failure the inlet isolation valve will be closed and the exhauster section will function as a breather filter until the equipment is repaired. If exhauster equipment must be maintained, the exhauster isolation valve can be closed and the inlet filter can function as a breather filter after Carbtrol® filters are attached.

5.1 SIZING CRITERIA

The criteria used to size the system will be the maximum combined leakage for tanks 101-C, 102-C, and 103-C plus an adjustment to allow for additional leaks and the inability to seal any tank 101-C underground leaks. This will provide a safety factor and may allow the system to be used to support vapor sampling activities and core drilling. One potential limiting factor is the size and condition of the cascade lines between the tanks. The 3-in. lines are of sufficient size to support low to medium flow rates between tanks but the actual condition of these lines is unknown and tests will have to be conducted to determine their flow capability. As discussed earlier, the backup position is to use above ground ducts to provide sufficient air flow from the tanks.

The exhaust flow can be adjusted by positioning the inlet flow control valve, by using a two stage exhauster, or by using a variable speed exhauster. The air-to-refrigerant condenser will be oversized to allow for future increases in air flow and the remainder of the air flow components will be sized to match.

The air balance chart (Figure 2) is based on the assumptions that the cascade lines are not restricted, that the leakage into the tanks is small (less than 100 cfm per tank), that -0.1 in. wg is adequate to prevent leakage out of the tanks and that flow is required through all three tanks. It was requested that a minimum of one volume change of tank vapor space per day be considered for each tank to prevent flammable gas build up. The chart shows

the three tanks in series with the exhauster at one end and the inlet at the other. By placing the exhauster on the middle tank, greater flows can be obtained since only one cascade line would be between the exhauster and the inlet. However, this would require an inlet on the two outboard tanks.

5.2 OPERATIONAL CONSIDERATIONS

The flow control valve below the inlet HEPA filter (Figure 3, Detail B) can be used to control the flow into the tank and regulate the tank negative pressures. By reducing the flow, allowances can be made for additional tank leakage and for openings associated with tank sampling. A seal loop near the tank exhaust port will provide a safety factor and will be sized to protect the tanks from low negative pressures.

The inlet and outlet filter locations are dependent on tank activities and can be moved as needed. The inlet filter is shown installed on tank 101-C and the exhaust system on tank 103-C (Figure 3). This will allow flow through all three tanks and will maintain all three tanks at a negative pressure. This will prevent leakage of toxic fumes through unsealed openings (tank 101-C is an assumed leaker and may have an opening that can't be sealed).

5.3 COMMERCIAL AVAILABILITY

The existing HEPA technology at the Hanford Site is excellent for waste tank use, so a HEPA filter would be sized and then obtained from Hanford Site sources. A preliminary review of the demister in use on the portable exhauster indicates that it might also be suitable for use on the proposed exhauster system. This would leave only the condenser coils and heater element, suitable for use in the vapor stream, to be selected.

Figure 4 is a flow schematic of a typical compressed air dryer. This is a very efficient unit and contains a condenser, moisture separator, and heater. It utilizes the incoming air to heat the outgoing air in an air-to-air heat exchanger. The condensing unit is an air-to-refrigerant heat exchanger and has an air-cooled condenser for the refrigerant. If this

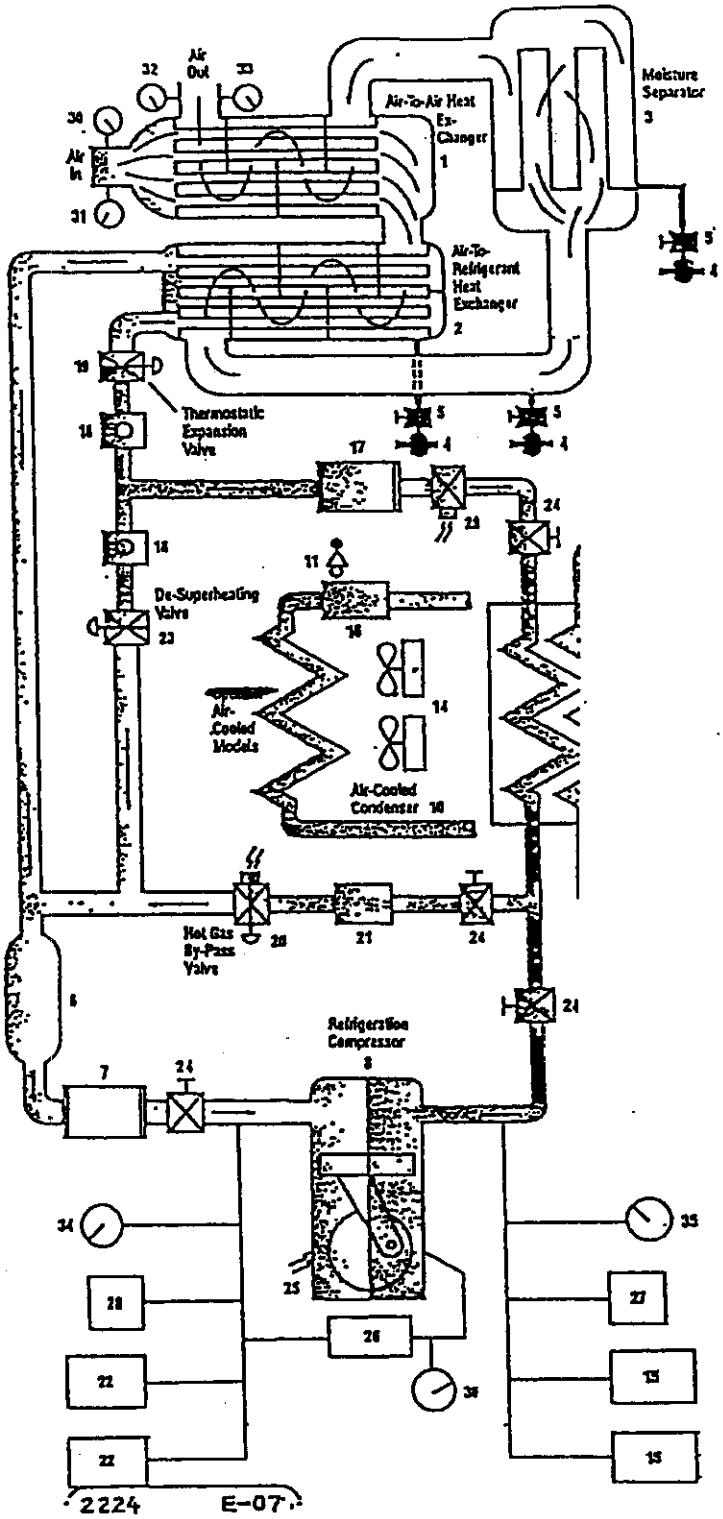

1 Air-to-air heat exchanger
2 Air-to-refrigerant heat exchanger (refrigerant evaporator)
3 Moisture separator
4 Automatic condensate drain
5 Manual isolation valve
6 Accumulator
7 Suction line filter
8 Refrigeration compressor
9 Water-cooled condenser
10 Air-cooled condenser
11 Pressure relief valve
12 Water regulating valve
13 Water strainer
14 Fans
15 Fan cut-out pressure switch
16 Receiver
17 Filter/dryer
18 Sight glass/liquid moisture indicator
19 Thermostatic expansion valve
20 Hot gas by-pass valve with solenoid shut off
21 Strainer
22 Pressure switch for compressor unloader
23 De-superheating valve
24 Service valve
25 Compressor crankcase oil heater
26 Low oil pressure cut-out switch
27 High refrigerant pressure cut-out switch
28 Low refrigerant pressure cut-out switch
29 Liquid line solenoid valve
30 Inlet air pressure gauge
31 Inlet air temperature gauge
32 Outlet air pressure gauge
33 Outlet air temperature gauge
34 Refrigerant suction pressure gauge
35 Refrigerant head pressure gauge
36 Compressor oil pressure gauge

Figure 4. Flow Schematic.

unit was correctly configured and if a HEPA filter was added, it could replace the condenser, moisture separator, and heater as shown in Figure 3.

The commercial air dryer discussed here and shown in Figure 4 has a 2000 scfm capacity at 100 psi and is available as a skid mounted unit weighing less than 3200 lb. It is used only to describe the concept and is not proposed as an available unit to be used on tank 103-C since the materials are not compatible with the vapor stream and it is designed to work at a 20 psi or greater.

6.0 RECOMMENDATIONS

The low volume exhaust system described in Section 5 should be considered for use on tank 103-C since it will eliminate or greatly reduce the potential for additional hazardous vapor exposures. The unit can be permitted under existing Clean Air Act regulations and the condenser can greatly extend the useful life of the Carbtrol® filters reducing operating and maintenance costs.

The concept of using this system to support vapor and core sampling should be explored since the condenser and Carbtrol® filter systems will stop the release of hazardous vapors.

The next step in developing this system would be to complete an assessment of the leak rate and the condition of the cascade lines. With this information the required flow rate can be established and the availability of components suitable for use in the vapor stream determined. A system could then be designed using the available components. Existing components proven by successful use at the Hanford Site should be given first consideration. An industry wide search which is directed toward the commercial nuclear industry and chemical plants handling hazardous materials should identify any components not available at the Hanford Site. A prototype unit can then be developed and be used to demonstrate both capability and safety. Follow on units could be "up scaled" based on the success of the prototype.

7.0 REFERENCES

Boyles, V.C., 1992, *Operating Specifications for Single-Shell Waste Storage Tanks*, OSD-T-151-00013, Westinghouse Hanford Company, Richland, Washington.

RMIS Viewprint Document Cover Sheet

This document was retrieved from the Records Management Information System (RMIS). It is intended for information only and may not be the most recent or updated version.

Accession #: **D196165298**

Document #: **SD-WM-ETP-107**

Title/Desc:
ENGINEERING TASK PLAN FOR THE VAPOR MONITOR INSTALLATION INTO 241C103 TANK

Pages: **12**

S

Stg. 21
JAN 23 1995 38

ENGINEERING DATA TRANSMITTAL

Page 1 of 2

1. EDT 604994

2. To: (Receiving Organization) Safety Equipment Development/71130	3. From: (Originating Organization) Safety Equipment Development/ 71130	4. Related EDT No.: N/A
5. Proj./Prog./Dept./Div.: Tank Vapor Issues Program	6. Cog. Engr.: N. A. Hertelendy	7. Purchase Order No.: N/A
8. Originator Remarks: ETN-94-0161, TANK VAPOR FLOW MONITOR TASK PLAN		9. Equip./Component No.: N/A
		10. System/Bldg./Facility: 241-C-103
11. Receiver Remarks:		12. Major Assm. Dwg. No.: N/A
		13. Permit/Permit Application No.: N/A
		14. Required Response Date: December 21, 1994

15. DATA TRANSMITTED

(A) Item No.	(B) Document/Drawing No.	(C) Sheet No.	(D) Rev. No.	(E) Title or Description of Data Transmitted	(F) Impact Level	(G) Reason for Transmittal	(H) Originator Disposition	(I) Receiver Disposition
1	WHC-SD-WM-ETP-107	All	0	Engineering Task Plan for the Vapor Monitor Installation into 241-C-103 Tank	SQ	1		

16. KEY

Impact Level (F)	Reason for Transmittal (G)	Disposition (H) & (I)
1, 2, 3, or 4 (see MRP 5.43)	1. Approval 2. Release 3. Information 4. Review 5. Post-Review 6. Dist. (Receipt Acknow. Required)	1. Approved 2. Approved w/comment 3. Disapproved w/comment 4. Reviewed no/comment 5. Reviewed w/comment 6. Receipt acknowledged

17. SIGNATURE/DISTRIBUTION (See Impact Level for required signatures)

(G) Reason		(J) Name	(K) Signature	(L) Date	(M) MSIN	(J) Name	(K) Signature	(L) Date	(M) MSIN	(G) Reason	(H) Disp.
1	1	Cog. Eng. NA Hertelendy	N.A. Hertelendy		H5-09	WG Farley	W.G. Farley	12/15/94	H5-32	1	
1	1	Cog. Mgr. TL Moore	J L Moore	12/14/94	H5-09						
1	1	Program Mgr. JW Osborne	J W Osborne	12/21/94	R2-78						
1	1	QA H. K. Ananda	H K Ananda	1/11/95	S1-57						
1	1	Safety MN Islam	L E Thomas	1-16-95	R3-08						
1	1	Safety E. R. Hewitt	E R Hewitt	1-16-95	R3-01						

18.	19.	20.	21. DOE APPROVAL (if required)
N. A. Hertelendy N.A. Hertelendy 12/14/94 Signature of EDT Originator / Date	N. A. Hertelendy N.A. Hertelendy 12/14/94 Authorized Representative for Receiving Organization / Date	T. L. Moore J L Moore 12/14/94 Cognizant/Project Engineer's Manager / Date	Ltr. No. ☐ Approved ☐ Approved w/comments ☐ Disapproved w/comments

BD-7400-172-2 (07/91) GEF097

BD-7400-172-1 (07/91)

RELEASE AUTHORIZATION

Document Number:	WHC-SD-WM-ETP-107 Rev. 0
Document Title:	Engineering Task Plan for the Vapor Monitor Installation into 241-C-103 Tank
Release Date:	January 19, 1995

This document was reviewed following the procedures described in WHC-CM-3-4 and is:

APPROVED FOR PUBLIC RELEASE

WHC Information Release Administration Specialist:

V.L. Birkland — January 20, 1995

V.L. Birkland

TRADEMARK DISCLAIMER. Reference herein to any specific commercial product, process, or service by trade name, trademark, manufacturer, or otherwise, does not necessarily constitute or imply its endorsement, recommendation, or favoring by the United States Government or any agency thereof or its contractors or subcontractors.

This report has been reproduced from the best available copy. Available in paper copy and microfiche. Printed in the United States of America. Available to the U.S. Department of Energy and its contractors from:

U.S. Department of Energy
Office of Scientific and Technical Information (OSTI)
P.O. Box 62
Oak Ridge, TN 37831
Telephone: (615) 576-8401

Available to the public from: U.S. Department of Commerce
National Technical Information Service (NTIS)
5285 Port Royal Road
Springfield, VA 22161
Telephone: (703) 487-4650

A-6001-400.2 (09/94) WEF256

S

SUPPORTING DOCUMENT

1. Total Pages 10

2. Title	3. Number	4. Rev No.
Engineering Task Plan for the Vapor Monitor Installation into 241-C-103 Tank	WHC-SD-WM-ETP-107	0

5. Key Words

Vapor, Monitor, Tank Ventilation, Installation

APPROVED FOR PUBLIC RELEASE

6. Author

Name: N. A. Hertelendy

N.A. Hertelendy
Signature

Organization/Charge Code 71130/N282B

7. Abstract

A vapor flow monitor is to be installed into the 241-C-103 tank's exhaust, just downstream of the HEPA filter. The flow monitor system includes the flow sensor, the baffle assembly, the signal conditioning and control electronics, and a chart recorder. The electronics package and the chart recorder are installed into a small, heated instrument cabinet that is mounted on the same steel pallet on which the flowmeter and the diffuser assembly is mounted. The flowmeter is connected to the HEPA filter with an unheated, un-insulated flex hose. An automatic drain, upstream of the flowmeter, is designed to automatically drain the condensate into an evaporating pan. The flowmeter is heated with a temperature controlled heater to avoid condensation.

8. PURPOSE AND USE OF DOCUMENT - This document was prepared for use within the U.S. Department of Energy and its contractors. It is to be used only to perform, direct, or integrate work under U.S. Department of Energy contracts. This document is not approved for public release until reviewed.

PATENT STATUS - This document copy, since it is transmitted in advance of patent clearance, is made available in confidence solely for use in performance of work under contracts with the U.S. Department of Energy. This document is not to be published nor its contents otherwise disseminated or used for purposes other than specified above before patent approval for such release or use has been secured, upon request, from the Patent Counsel, U.S. Department of Energy Field Office, Richland, WA.

DISCLAIMER - This report was prepared as an account of work sponsored by an agency of the United States Government. Neither the United States Government nor any agency thereof, nor any of their employees, nor any of their contractors, subcontractors or their employees, makes any warranty, express or implied, or assumes any legal liability or responsibility for the accuracy, completeness, or any third party's use or the results of such use of any information, apparatus, product, or process disclosed, or represents that its use would not infringe privately owned rights. Reference herein to any specific commercial product, process, or service by trade name, trademark, manufacturer, or otherwise, does not necessarily constitute or imply its endorsement, recommendation, or favoring by the United States Government or any agency thereof or its contractors or subcontractors. The views and opinions of authors expressed herein do not necessarily state or reflect those of the United States Government or any agency thereof.

9. Impact Level SQ

10. RELEASE STAMP

OFFICIAL RELEASE BY WHC 38
DATE JAN 23 1995
Sta. 21

A-6400-073 (11/91) (EF) WEF124

WHC-SD-WM-ETP-107

Rev. 0

ENGINEERING TASK PLAN

FOR THE VAPOR MONITOR INSTALLATION

INTO 241-C-103 TANK

December 1994

Author

N. A. Hertelendy
Mechanical Equipment

Filename: ETP2

ETN-94-0161

WHC-SD-WM-ETP-107
Rev. 0

TABLE OF CONTENTS

		Page
1.0	INTRODUCTION	1
1.1	PURPOSE	1
1.2	BACKGROUND	1
2.0	SCOPE	1
2.1	OBJECTIVES	1
2.2	TASK DESCRIPTION	1
2.3	SCOPE CHANGES	2
3.0	DESCRIPTION	2
3.1	PHYSICAL DESCRIPTION	2
3.2	DELIVERABLES	2
4.0	RESPONSIBILITY OF ASSIGNMENTS	3
4.1	PROJECT MANAGEMENT	3
4.2	SUPPORT DOCUMENTATION	3
4.2.1	Engineering Task Plan	3
4.2.2	Unreviewed Safety Question (USQ) Evaluation	3
4.3	INSTALLATION DOCUMENTATION	3
4.3.1	Flow Monitor Installation/In-place Testing	3
4.3.2	Flow Monitor Electrical/Electronic Installation Documentation	3
4.3.3	Installation Management	4
4.4	SCHEDULING	4
4.4.1	Installation Coordination	4
4.4.2	Material Procurement	4
4.5	TESTING	4
4.5.1	Operational Setup	4
4.5.2	Testing and Test Coordination	4
4.6	INSTALLATION EVALUATION	5
5.0	SCHEDULE	5
6.0	COST ESTIMATE	7
FIGURE 1		6

WHC-SD-WM-ETP-107
Rev. 0

ENGINEERING TASK PLAN FOR THE VAPOR MONITOR INSTALLATION INTO 241-C-103 TANK

1.0 INTRODUCTION

1.1 PURPOSE

The purpose of this Engineering Task Plan (ETP) is to establish the line of responsibility for the installation of the vapor flow monitor into the 241-C-103 (C-103) waste tank, as part of the vapor flow monitoring and sampling system. The system is to be installed downstream of the tank C-103 breather filter.

1.2 BACKGROUND

Tank C-103 is vented to the atmosphere through a high efficiency particle air (HEPA) filter and is thought to be the source of noxious vapor emissions. The primary motive force for these emissions is believed to be the normal barometric pressure changes, wind, tank ambient temperature difference, and chimney effect. In order to assess the danger caused by these vapors, tank breathing must be characterized. There is no flowmeter on the market with sufficiently low pressure drop that can measure such a low flow, nor is there one with sufficient range to accommodate possible "flow variations" which may occur in tank C-103. Westinghouse Hanford Company (WHC) developed such a flowmeter, WHC-SD-WM-ETP-004 (Hertelendy, 1993), and it is now ready for installation onto tank C-103. Tanks 241-C-101 (C-101), 241-C-102 (C-102), and C-103 are interconnected via underground cascade overflow. Presently, C-101 and C-103 are valved off and all three tanks are breathing through C-102. After the flow monitor installation, the C-103 vent-valve will be opened and the vent valve on C-102 will be closed to channel all flow through the flowmeter.

2.0 SCOPE

2.1 OBJECTIVES

The objectives of this task are to:

- Install the Serial Number (SN) SN1 vapor flow monitor downstream of the HEPA filter.
- Complete the electrical hook-up to bring system on line.

2.2 TASK DESCRIPTION

At the end of this engineering task, the vapor flow monitor will be installed on tank C-103. It will have the capability to measure the flow in and out of the tank, continuously record flow data, turn on/off grab samplers, turn on/off alarms, or any other instruments (up to a maximum of five).

2.3 SCOPE CHANGES

Any deviations from this document are considered scope changes and will require revisions to this ETP. All changes to this document shall be handled formally in accordance with WHC-CM-6-1, Standard Engineering Practices, Section EP-2.2, and shall include changes in schedules and cost.

3.0 DESCRIPTION

3.1 PHYSICAL DESCRIPTION

The breather filter for C-103 is a Flanders[1] G1 housing. Two carbon filters are presently installed downstream of the breather filter. These carbon filters will have to be removed prior to the vapor monitor installation. The flow monitor is designed for installation downstream of the breather filter. The flow monitor has a "diffuser module" (the baffle), which is mounted at the exhaust end of the monitor to reduce the effects of wind and air turbulence. The whole assembly is mounted on the center of a steel pallet with the supporting electronics and chart recorder (which are mounted in a standard electric enclosure). The steel pallet is a standard, 4 ft x 4 ft, "forklift" pallet to which the flowmeter is mounted as low as possible to keep the center of gravity (Cg) low. The electronics cabinet is mounted on a UNI-STRUT frame welded to the pallet. Thus the Cg of the pallet assembly is kept very low to minimize the effects of a seismic event. The cabinet is equipped with a heater and with a 8° tilt switch which disconnects power to the cabinet in case the cabinet tilts over 8° during a seismic event. The flowmeter is mounted vertically on the top of a flanged 4", 90° polyvinyl chloride (PVC) elbow and a steel support frame. On the bottom of the elbow there is an automatic drain to drain the condensate into a heated, aluminum evaporation pan. The vapor monitor itself is equipped with an internal heater and it is insulated, but the flexible line between the flowmeter and the HEPA filter does not have to be heat traced.

3.2 DELIVERABLES

The deliverables are identified as follows:

3.2.1 Installation of SNI vapor flow monitor in tank C-103 in ready to operate condition. All vapor and electrical connections completed.

3.2.2 Removal of two carbon adsorber filters.

3.2.3 Operational testing of the installed system to demonstrate function.

3.2.4 Installed system ready to record tank breathing flow.

---

[1]Flanders Filters, Inc., Washington, North Carolina.

4.0 RESPONSIBILITY OF ASSIGNMENTS

4.1 PROJECT MANAGEMENT

Responsible Organization: Mechanical Equipment/71130
Manager: T. L. Moore TLMoore 12/14/94
Engineer: N. A. Hertelendy

4.2 SUPPORT DOCUMENTATION

4.2.1 Engineering Task Plan

This ETP identifies the criteria, activities, responsibilities, schedule, and cost for the overall program.

Responsible Organization: Mechanical Equipment/71130
Manager: T. L. Moore TLMoore 12/14/94
Engineer: N. A. Hertelendy

4.2.2 Unreviewed Safety Question (USQ) Evaluation

A USQ evaluation will be performed.

Responsible Organization: Waste Tank Safety Analysis/74200
Manager: G.L. Smith ~~J. M. Grigsby~~ [illegible] 12-16-94
Engineer: W. G. Farley

4.3 INSTALLATION DOCUMENTATION

4.3.1 Flow Monitor Installation/In-place Testing

This task includes the mechanical design of the vapor flow monitor installation, testing prior to turnover, and writing the necessary Engineering Change Notices (ECNs). It also includes writing the necessary ECNs to remove the carbon filters and ensuring the removal.

Responsible Organization: Test Engineering/7CH40
Manager: G. T. Bear G. Bear 12-15-94
Engineer: D. W. Strasser

4.3.2 Flow Monitor Electrical/Electronic Installation Documentation

This task includes the electrical/electronic design of the vapor flow monitor installation, testing prior to turnover, and writing the necessary ECNs, as well as the electrical/electronic installation drawings and cabinet installation coordination.

Responsible Organization: Test Engineering/7CH40
Manager: G. T. Bear G. Bear 12-15-94
Engineer: D. W. Strasser

4.3.3 Installation Management

This organization shall coordinate the installation, including the preparation of the work packages, mechanical and electrical hook-ups, and set up the Readiness Review.

Responsible Organization:	TWRS Operations/7C550
Manager:	M. D. Harding
Person in Charge (PIC):	R. L. Wright

4.4 SCHEDULING

4.4.1 Installation Coordination

Responsible Organization:	TWRS Operations/7C550
Manager:	M. D. Harding
PIC:	J. Sanders

4.4.2 Material Procurement

In order to expedite installation, this organization shall ~~identify items to be procured and~~ issue procurement requisitions as required based on the Bill of material from the Planner or PIC

Responsible Organization:	Maintenance Integration/ Material Services/7CB41
Manager:	J. E. Allison
Plant Engineer	R. B. Dunn

4.5 TESTING

4.5.1 Operational Setup

This organization will assist Mechanical Engineering in the setup and testing of the flow monitors in preparation of turnover.

Responsible Organization:	Characterization Equipment/71510
Manager:	R. J. Blanchard
Engineer:	P. R. Deichelbohrer

4.5.2 Testing and Test Coordination

This organization will be responsible to install and test the vapor monitor and cabinet assembly, and writing the turnover report.

This organization will have primary responsibility.

Responsible Organization:	Mechanical Equipment/71130
Manager:	T. L. Moore 12/14/94
Engineer:	N. A. Hertelendy
Engineer:	P. R. Deichelbohrer

4.6 INSTALLATION EVALUATION

The installation design will be evaluated by Quality Assurance (QA) and Industrial Safety to ensure that all Hanford standards are met.

Manager, Quality Assurance: Don Board Date: 1-16-95

~~Manager~~, Industrial Safety: E R Hunt Date: 1/16/95

5.0 SCHEDULE

See Figure 1 for schedule.

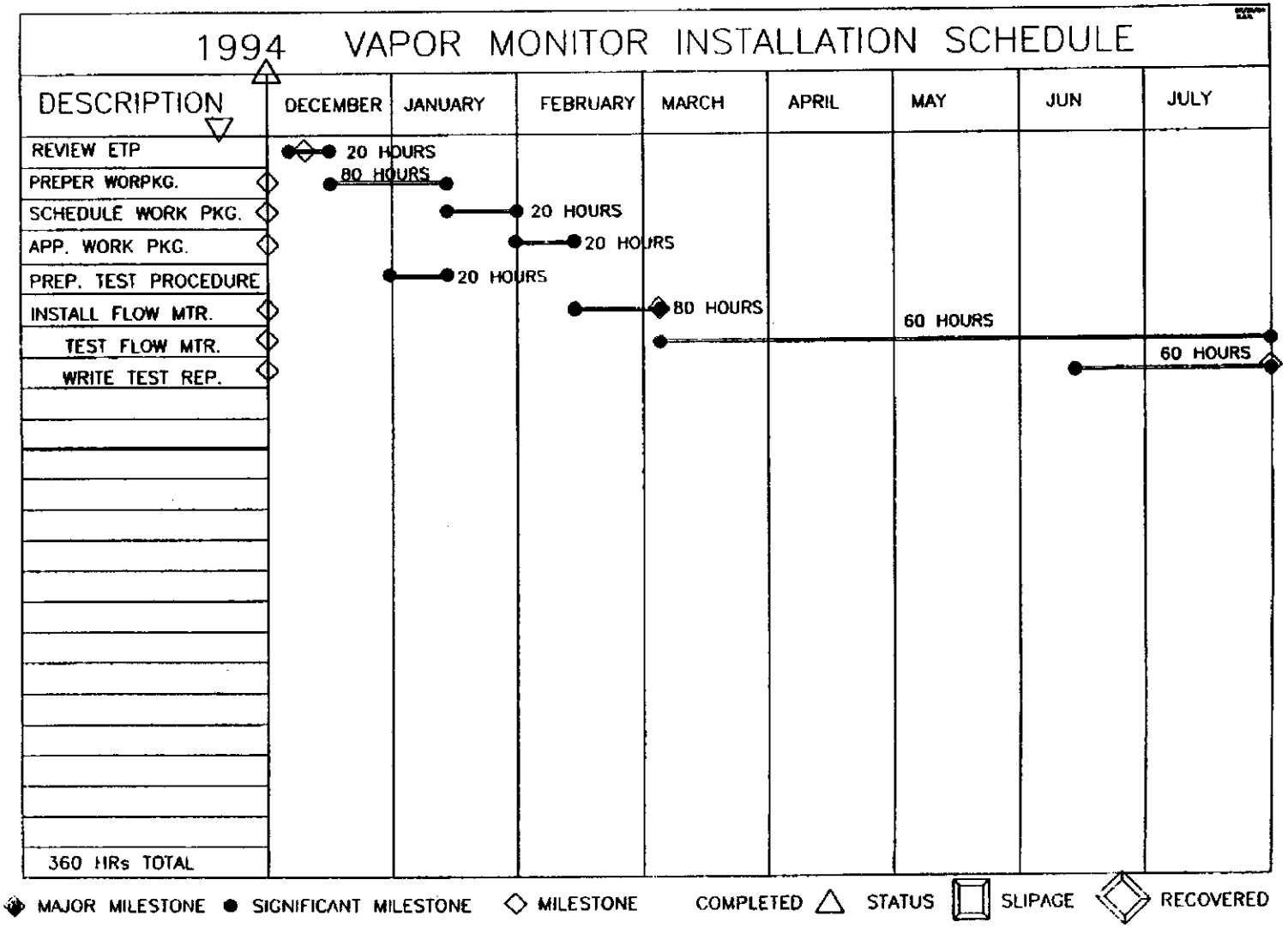
1994 VAPOR MONITOR INSTALLATION SCHEDULE
DESCRIPTION
DECEMBER
JANUARY
FEBRUARY
MARCH
APRIL
MAY
JUN
JULY
REVIEW ETP
PREPER WORPKG.
SCHEDULE WORK PKG.
APP. WORK PKG.
PREP. TEST PROCEDURE
INSTALL FLOW MTR.
TEST FLOW MTR.
WRITE TEST REP.
20 HOURS
80 HOURS
20 HOURS
20 HOURS
20 HOURS
80 HOURS
60 HOURS
60 HOURS
360 HRs TOTAL
MAJOR MILESTONE
SIGNIFICANT MILESTONE
MILESTONE
COMPLETED
STATUS
SLIPAGE
RECOVERED

6.0 COST ESTIMATE

TASK #	RESPONSIBILITY OF ASSIGNMENT	ORG. CODE	TYPE	RATE	FUNC-TIONAL OVERHEAD	HOURS	TOTAL ESTIMATE IN FUNC-TIONAL $
4.1	PROJECT MANAGEMENT	71130	E	39.85	1.185	80	3778
4.2	SUPPORT DOCUMENTATION						
4.2.1	Engineering Task Plan	71130	N	15.97	1.185	40	757
4.2.2	USQ Evaluation	8D113	E	40.56	1.508	16	979
4.3	INSTALLATION DOCUMENTATION						
4.3.1	Flow Monitor Installation/ In-place Testing	7CH40	E	39.85	1.185	16	756
4.3.2	Flow Monitor Electrical/ Electronic Installation Documentation	7CH40	E	39.85	1.185	16	756
4.3.3	Installation Management	7C550	E N	39.85 15.97	1.185	32 8	1512 152
4.4	SCHEDULING						
4.4.1	Installation Coordination	7C550	E	35.73	1.320	16	755
4.4.2	Material Procurement	7CB41	E	35.73	1.185	16	677
4.5	TESTING						
4.5.1	Operational Setup	71510	E	39.85	1.185	40	1889
4.5.2	Testing and Test Coordination	71130	E	39.85	1.185	24	1133
4.6	INSTALLATION EVALUATION						
	Quality Assurance Evaluation	38220	E N	37.95 22.36	1.440	16 8	874 258
	Industrial Safety Evaluation	31111	E N	34.58 22.16	1.440	12 4	598 128
	MATERIALS						1000
	SUBTOTAL						16002
	25% CONTINGENCY						4000
	TOTAL COST						20000

RMIS Viewprint Document Cover Sheet

This document was retrieved from the Records Management Information System (RMIS). It is intended for information only and may not be the most recent or updated version.

Accession #: **D196165370**

Document #: **SD-WM-ETP-115**

Title/Desc:
ENGINEERING TASK PLAN FOR A VAPOR TREATMENT SYSTEM ON TANK 241C103

Pages: **30**

S

MAR 09 1995
35 Station 21

ENGINEERING DATA TRANSMITTAL

Page 1 of 1

1. EDT 604999

2. To: (Receiving Organization) Characterization Equipment Development (71130)	3. From: (Originating Organization) Characterization Equipment Development (71130)	4. Related EDT No.: 604997
5. Proj./Prog./Dept./Div.: Tank Vapor Issues Resolution Program	6. Cog. Engr.: R. B. Conrad	7. Purchase Order No.: N/A
8. Originator Remarks: ETN-94-0167 This is related to TPA Milestone No. M-40-07 which is to install and operate the C-103 vapor treatment system by June 30, 1995. Your comments have been incorporated. Please sign below.		9. Equip./Component No.: N/A 10. System/Bldg./Facility: 241-C-103
11. Receiver Remarks:		12. Major Assm. Dwg. No.: N/A 13. Permit/Permit Application No.: N/A 14. Required Response Date: March 7, 1995

15. DATA TRANSMITTED

(A) Item No.	(B) Document/Drawing No.	(C) Sheet No.	(D) Rev. No.	(E) Title or Description of Data Transmitted	(F) Impact Level	(G) Reason for Transmittal	(H) Originator Disposition	(I) Receiver Disposition
1	WHC-SD-WM-ETP-115	ALL	0	Engineering Task Plan for a Vapor Treatment System on Tank 241-C-103	ESQ	1	1	

16. KEY

Impact Level (F)	Reason for Transmittal (G)	Disposition (H) & (I)
1, 2, 3, or 4 (see MRP 5.43)	1. Approval 2. Release 3. Information 4. Review 5. Post-Review 6. Dist. (Receipt Acknow. Required)	1. Approved 2. Approved w/comment 3. Disapproved w/comment 4. Reviewed no/comment 5. Reviewed w/comment 6. Receipt acknowledged

17. SIGNATURE/DISTRIBUTION (See Impact Level for required signatures)

(G) Reason	(H) Disp.	(J) Name	(K) Signature	(L) Date	(M) MSIN	(J) Name	(K) Signature	(L) Date	(M) MSIN	(G) Reason	(H) Disp.
1	1	Cog.Eng. RB Conrad	Bruce Conrad	3/9/95	R3-09	Safety JA Harvey	R.P. Harvey	3/9/95	R3-01	1	1
1	1	Cog. Mgr. TL Moore	T L Moore	3/9/95	R3-09	Env. LA Garner	[illegible]	3/9/95	R1-52	1	1
1	1	Program Mgr. JW Osborne	[illegible]	3/9/95	S7-15	QA HK Ananda	H Ananda	3/9/95	S1-57	1	1

18. RB Conrad Bruce Conrad 3/9/95 Signature of EDT Originator Date	19. RB Conrad Bruce Conrad 3/9/95 Authorized Representative for Receiving Organization Date	20. TL Moore T L Moore 3/9/95 Cognizant/Project Engineer's Manager Date	21. DOE APPROVAL (if required) Ltr. No. [] Approved [] Approved w/comments [] Disapproved w/comments

BD-7400-172-2 (07/91) GEF097

BD-7400-172-1 (07/91)

RELEASE AUTHORIZATION

Document Number:	WHC-SD-WM-ETP-115, Rev. 0
Document Title:	ENGINEERING TASK PLAN FOR A VAPOR TREATMENT SYSTEM ON TANK 241-C-103
Release Date:	3/9/95

This document was reviewed following the procedures described in WHC-CM-3-4 and is:

APPROVED FOR PUBLIC RELEASE

WHC Information Release Administration Specialist:

Chris Willingham

C. Willingham 3/9/95

TRADEMARK DISCLAIMER. Reference herein to any specific commercial product, process, or service by trade name, trademark, manufacturer, or otherwise, does not necessarily constitute or imply its endorsement, recommendation, or favoring by the United States Government or any agency thereof or its contractors or subcontractors.

This report has been reproduced from the best available copy. Available in paper copy and microfiche. Printed in the United States of America. Available to the U.S. Department of Energy and its contractors from:

U.S. Department of Energy
Office of Scientific and Technical Information (OSTI)
P.O. Box 62
Oak Ridge, TN 37831
Telephone: (615) 576-8401

Available to the public from: U.S. Department of Commerce
National Technical Information Service (NTIS)
5285 Port Royal Road
Springfield, VA 22161
Telephone: (703) 487-4650

A-6001-400.2 (09/94) WEF256

S

SUPPORTING DOCUMENT

1. Total Pages 28

2. Title	3. Number	4. Rev No.
Engineering Task Plan for a Vapor Treatment System on Tank 241-C-103	WHC-SD-WM-ETP-115	0

5. Key Words	6. Author
Worker Exposure Industrial Hygiene Vapor Mixing	Name: RB Conrad Signature Organization/Charge Code 71130/N2044

7. Abstract

This Engineering Task Plan describes tasks and responsibilities for the design, fabrication, test, and installation of a vapor treatment system on Tank 241-C-103.

8. PURPOSE AND USE OF DOCUMENT - This document was prepared for use within the U.S. Department of Energy and its contractors. It is to be used only to perform, direct, or integrate work under U.S. Department of Energy contracts. This document is not approved for public release until reviewed.

PATENT STATUS - This document copy, since it is transmitted in advance of patent clearance, is made available in confidence solely for use in performance of work under contracts with the U.S. Department of Energy. This document is not to be published nor its contents otherwise disseminated or used for purposes other than specified above before patent approval for such release or use has been secured, upon request, from the Patent Counsel, U.S. Department of Energy Field Office, Richland, WA.

DISCLAIMER - This report was prepared as an account of work sponsored by an agency of the United States Government. Neither the United States Government nor any agency thereof, nor any of their employees, nor any of their contractors, subcontractors or their employees, makes any warranty, express or implied, or assumes any legal liability or responsibility for the accuracy, completeness, or any third party's use or the results of such use of any information, apparatus, product, or process disclosed, or represents that its use would not infringe privately owned rights. Reference herein to any specific commercial product, process, or service by trade name, trademark, manufacturer, or otherwise, does not necessarily constitute or imply its endorsement, recommendation, or favoring by the United States Government or any agency thereof or its contractors or subcontractors. The views and opinions of authors expressed herein do not necessarily state or reflect those of the United States Government or any agency thereof.

APPROVED FOR PUBLIC RELEASE

eW 3-9-95

10. RELEASE STAMP

OFFICIAL RELEASE BY WHC

DATE MAR 09 1995

35 Stanco 21

9. Impact Level ESQ

WHC-SD-WM-ETP-115

REV. 0

ENGINEERING TASK PLAN

for a

VAPOR TREATMENT SYSTEM

ON TANK 241-C-103

Characterization Equipment Development

R. B. Conrad

March 1995

WHC-SD-WM-ETP-115
REV 0

TABLE OF CONTENTS

		Page
1.0	INTRODUCTION	1
1.1	Purpose	1
1.2	Background	1
2.0	SCOPE	2
2.1	Objective	2
2.2	Deliverables	2
3.0	DESCRIPTION	3
3.1	Physical Description	3
3.2	Procurement	4
3.3	Testing	4
3.4	Special Reviews	5
3.5	Installation	5
3.6	Maintenance/Operation	5
3.7	Training	5
3.8	Tank Flow Rate Range	5
3.9	Metric Units	5
3.10	Design Control	6
4.0	SYSTEM FUNCTIONAL PERFORMANCE DESCRIPTION	6
4.1	Environmental Conditions	6
4.2	Vapor Mixing System Inlet Conditions (from tank)	7
4.3	Vapor Mixing System Outlet Conditions	7
4.4	Design Interface	8
4.5	Instrumentation and Control	10
4.6	Material Selection	10
4.7	Tank Vapor Condensate	10
4.8	Transportability	11
4.9	Design Verification	11
5.0	ORGANIZATIONAL RESPONSIBILITIES	11
5.1	Customer	11
5.2	Responsible Manager and Engineer	11
5.3	Lead Design and Test Engineer	12
5.4	Electrical Support Engineer	12
5.5	Equipment Testing Engineer	13
5.6	East Tank Farms Ventilation Systems Engineer	13
5.7	Installation/Acceptance Engineer	13
5.8	Quality Control Engineer	14
5.9	Industrial Safety Engineer	14
5.10	Environmental Compliance Engineer	15

WHC-SD-WM-ETP-115
REV 0

TABLE OF CONTENTS

Page

5.11 Environmental Permit Engineer 15
5.12 National Environmental Policy Act (NEPA) 16
5.13 Safety Assessments Engineer 16
5.14 Operational Readiness Review Engineer 16
5.15 TWRS Operations Support 16
5.16 TWRS Industrial Hygienist 17
5.17 ABU Requirements 17

6.0 SCHEDULE 17

7.0 COST ESTIMATE 19

8.0 QUALITY ASSURANCE 19

9.0 APPROVAL DESIGNATOR 20

10.0 SAFETY CLASS 20

11.0 REFERENCES 20

TABLE 1, C-103 Vapor Treatment System
Environmental and Worker Impacts 23
TABLE 2, C-103 Vapor Treatment System
Environmental and Worker Impacts 24

WHC-SD-WM-ETP-115
REV 0

ENGINEERING TASK PLAN FOR A VAPOR TREATMENT SYSTEM ON TANK 241-C-103

1.0 INTRODUCTION

1.1 Purpose

The purpose of this Engineering Task Plan (ETP) is to obtain concurrence on the scope, tasks, and responsibilities necessary to design, fabricate, test, and install a vapor treatment system (mixing system) on tank 241-C-103 (C-103). The mixing system is to be installed downstream of the breather filter and will use a mixing blower to reduce the chemical concentrations to below allowable levels as identified by the Toxicology Review Panel (TRP) report (Mahlum, et al., 1994). This is related to Tri-Party Agreement (TPA) Milestone No. M-40-07 which is to install and operate the C-103 vapor treatment system by June 30, 1995.

1.2 Background

A number of people have reported ill effects, including headache, burning sensation in nose and throat, nausea, and impaired pulmonary function, while working around waste tanks on the Hanford project. As indicated in the "1993 Program Plan for the Resolution of Tank Vapor Issues," WHC-EP-0562, Rev. 1 (Osborne and Huckaby, 1994), musty and foul odors, including the smell of ammonia, have been reported to emanate from several single-shell tanks (SSTs). Several of these occurrences were attributed to C-103. C-103 is connected to 241-C-102 (C-102) which is connected to 241-C-101 (C-101) via underground cascade overflow lines (C-103 being the lowest or last tank in the cascade).

An attempt to address this problem was made in 1989. Two carbon adsorption canisters were installed downstream of the C-103 breather filter. Multiple failures of this passive system caused it to be valved out of service in 1993. The failures were all characterized by partial or total restriction of flow identified during periodic flow testing of the breather filter. An Engineering Evaluation of Alternatives evaluated this system and concluded that these failures were most likely due to accumulation of condensate inside the canisters until the inlet piping was covered (Conrad, 1994).

It was also determined that unfiltered leak paths were not adequately sealed which would result in fugitive emissions (emissions emanating from unfiltered leak paths). The pressure drop of the passive carbon system added to the tank pressure during rapid barometric pressure drops, which had to result in increased fugitive emissions. As the carbon adsorbers filled with condensate, the fugitive emission problem would get worse.

Characterization of C-103 vapors and gases has been completed (Huckaby and Story, 1994). The TRP has issued a report identifying the chemicals of concern (Mahlum, 1994). See Table 1 for information.

The Engineering Evaluation of Alternatives was performed to identify the best vapor treatment technologies to control vapor emissions from C-103 (Conrad, 1994). A review of the existing system concluded that, with some design and procedural improvements, it was a viable technology. Carbon adsorption with carbon adsorption/reactants and biofiltration were identified as the top two technologies for this application. Uncertainties associated with biofiltration initially resulted in the selection of a carbon based technology. A survey of carbon vendors using the latest tank vapor characterization, however, resulted in a much higher carbon usage rate than previously estimated. During initial design efforts, a simpler, safer, and more cost effective "mixing" method was identified that does not require the use of carbon.

The new concept has been approved by Westinghouse Hanford Company (WHC) Engineering and Program management, WHC safety and environmental organizations, and the Washington Department of Health. Efforts to gain approval from the Washington Department of Ecology (WDOE) are ongoing. A representative from WHC's Air and Water Permitting indicates that chances to obtain WDOE's approval are high.

2.0 SCOPE

2.1 Objective

The objective of this task is to provide a treatment system for C-103, which is TPA Milestone No. M-40-07 (Osborne & Huckaby, 1994). Completion of the field Acceptance Test Procedure (ATP) as described herein will satisfy the TPA milestone. The vapor and liquid characterization of tank C-103 indicates that it is definitely a source of vapors of concern. Tank C-102 is directly connected to C-103 and is believed to possibly be a source of vapors of concern. Tank C-101 has been pumped and is not considered a source of vapors of concern.

The installation of this mixing system will protect the facility worker from overexposure to passive vapors emanating from C-102 and C-103 during normal operation. When the mixing system is installed and its performance verified, it will allow Industrial Hygiene to relax the worker safety personal protective equipment requirements that are currently in place within the vicinity of C-102 and C-103.

The design objective will be to design a system that will keep tank emissions as close to passive as possible that will protect workers and minimize impact on the environment.

2.2 Deliverables

A mixing system will be provided to Tank Farms Operations. The deliverables consist of the following.

2.2.1 Project supporting documentation including an ETP, procurement specifications, drawings, test plan, plant forces work review, As Low As Reasonably Achievable (ALARA) Management Work Sheet, dose rate

calculations, unreviewed safety question (USQ) screening (where required), Acceptance for Beneficial Use (ABU), and as-built drawings.

2.2.2 Hardware to support the mixing system installation.

2.2.3 The mixing system may include a draw tube/venturi, mixer blower, and stack and be skid mounted. Instrumentation may consist of a mixer blower outlet flow or pressure switch that will interface with status lights. It will also have the capability to measure and totalize flow exiting the tank.

2.2.4 An evaluation of electrical power availability and condition at the installation site and design, procurement, and installation of additional or new electrical power if required.

2.2.5 Installation work plan and operating and maintenance procedures as required.

3.0 DESCRIPTION

3.1 Physical Description

This mixing system concept will utilize a blower that will force approximately 22.6 m^3/min (800 cfm) of fresh air up through a nominal 4.6 m (15-foot) stack. See Figure 1 for the current design concept. This relatively large flow rate of fresh air will pass around a smaller beveled draw tube positioned perpendicular to the main flow. This will create a low pressure in the smaller tube which will be connected to the tank via a new 2-inch diameter three-way valve installed on the existing breather filter. By adjusting the position of the beveled tube in the larger flow stream, the low pressure, and therefore the tank flow rate, can be adjusted. The turbulence in the stack will ensure full mixing of the two streams.

An evaluation of potential unfiltered leak paths concluded that fugitive emissions can be eliminated or at least reduced to an acceptable level by "sealing" unfiltered leak paths (Conrad, 1994). The mixing system will have the capability to measure tank exhaust flow rate.

The mixing system will be capable of being passively operated. That is, the tank flow after turning on the fresh air blower will have the capability to be set to equal the average natural breathing rate. The system will "track" with barometric pressure fluctuations. To illustrate, during a decrease in barometric pressure, the pressure inside the tank, and thus the pressure in the small tube, will increase relative to that of ambient. The pressure difference at the beveled tube/main flow interface must increase resulting in a higher flow out of the tank. As soon as the tank pressure equalizes with the barometric pressure, the flow will return to normal. The system flow rate will also be adjustable if field conditions require a higher tank flow. Although very desirable, it is not a requirement that a measurable negative pressure be attained in the three tanks.

The three tanks will be configured as follows: 1) the mixing system will be installed downstream of the C-103 breather filter; 2) the breather valve on C-101 and C-102 will be closed; and 3) the above ground unfiltered leak paths will be sealed as required. In this configuration, the only predominant point of emission is via the mixing system on C-103. The system will be turned on and, by measuring the pressure in the three tanks, the optimum flow rate will be obtained. If the tanks are sufficiently "leak tight," a negative pressure should be measurable. If they are not and cannot be made so, the system will be set at 0.4 m^3/min (15 cfm) above the average natural breathing rate. This is the estimated peak flow rate due to barometric pressure fluctuations. In essence this flow will simulate the highest estimated combined flow from all factors that would create a condition where the tank pressure is greater than the atmosphere causing tank vapor to exit a tank. These factors include the Food Instrument Corporation purge air, temperature buoyancy effects, and barometric pressure fluctuations. The argument is that by doing so these factors are negated and the predominant point of emission is through the mixing system.

The minimum average flow rate allowed is 56 l/min (2 cfm) as identified by a safety analysis performed on the exothermic reaction hazards of the organic liquid layer in C-103 (Postma, 1994).

3.2 Procurement

All material procurement will be identified and accomplished in accordance with WHC-CM-2-1, Procurement Manual and Procedures. Emergency procurements will be used only if time constraints on the item will exceed scheduled commitments that may prolong an unsafe condition.

3.3 Testing

Preliminary tests on individual components shall be performed to optimize design configuration. Formal testing will include a shop ATP, a field ATP after installation, and an Operational Test Procedure (OTP). These formal tests will be accomplished in accordance with approved test procedures (see Section 9.0).

After installation a field ATP will be performed. This ATP will verify the operation of the system and that the concentrations at the stack exit are below the Consensus Exposure Standard (CES) as identified by the TRP report (Mahlum, 1994). Successful completion of this ATP will satisfy the TPA milestone.

After completion of the field ATP, an OTP will be performed which may take one to two months to complete. During this OTP, Industrial Hygiene personnel will perform additional source, area, and personnel monitoring to further monitor the system's performance before relaxing safety requirements. Barometric pressure, flow rate, tank pressures, etc., will also be monitored to verify performance characteristics. The OTP will also attempt to establish a system curve (i.e., negative pressure of each tank versus mixing system tank flow rate from 0 to 40 cfm).

After completion of the OTP, the system will be formally turned over to Operations.

3.4 Special Reviews

Special reviews required include review by Safety Analysis and a final Operational Readiness Review (ORR) prior to installation. An ORR will also be required prior to final turnover to Operations after completion of the performance evaluation phase. This task is less than a Hazard Category 3 and, as such, the readiness review will be via a plant generated checklist. In addition, a USQ determination will be performed in accordance with WHC-CM-1-3, Management Requirements and Procedures, MRP 5.12.

3.5 Installation

Installation will be completed by appropriate bargaining unit staff. Installation will be performed via work package documentation in accordance the Job Control System (JCS).

3.6 Maintenance/Operation

Operation and maintenance of the system will be performed through approved tank farm preventive maintenance and operation/maintenance documents.

3.7 Training

Installation training will be performed prior to installation. Maintenance and operation training will be performed prior to final turnover to Operations.

3.8 Tank Flow Rate Range

The WDOE must approve of the operating range of 0.4 m^3/min (0-15 cfm) above average natural breathing rate. Air and Water Permitting has indicated confidence is high that this approval will be obtained.

3.9 Metric Units

All drawings, documents, and procedures will utilize metric units in their development. Soft conversions from English units to metric units (also known as standard international system of units (SI)) shall be implemented on this project where practical. For example, pipes, tubing, fittings, plate sizes, wiring, panels, etc., will be true English dimensioned components, but will be called out with its equivalent metric dimension. English unit callouts, in parentheses, will only follow those SI units which are at critical locations, interfaces with English components, or where confusion may occur with them. Bills of material will utilize both units where practical. Equipment that is routinely labelled, sold, and installed by other than metric callouts will be detailed on the drawings and specifications by the common trade size (i.e., wire size, motor size, English sized fasteners, etc.).

Analog pressure gauges as well as flow measuring and sensing devices will have combination measurement units called out, with the primary numbers

in SI units. The pressure units will be in centimeters of water (inches of water) and/or kilopascals (psi) as required. Digital meters will be set to read in SI units.

3.10 Design Control

The mixing system design shall be controlled per WHC-CM-6-1, Standard Engineering Practices, EP-2.4, Rev. 3. The system has facility use potential. This document will serve as the engineering work plan for the mixing system assembly.

The drawings will be identified as "development control." The drawings will identify any restrictions or special conditions attached to the fabrication. Material requirements and inspection criteria will be called out on the drawings.

Changes to fabrication drawings will be made only by the cognizant design engineer or designated representative (see engineering tasks). Changes shall be made in red ink on drawings and then signed and dated by the individual making the change. If a drawing becomes illegible or confusing due to the number of changes, that drawing shall be replaced with an updated version containing all modifications to that point.

4.0 SYSTEM FUNCTIONAL PERFORMANCE DESCRIPTION

The mixing system will consist of a skid mounted mixing blower, draw tube/venturi, and stack. See Figure 1 for a design concept which is provided for reference only.

4.1 Environmental Conditions

Condition	Range	Rate of Change
Ambient Air Temperature	-31°C to 46°C (-23°F to 115°F)	3°C (5.4°F) decrease in 20 minutes 4°C (7.2°F) increase in 60 minutes
Relative Humidity	15% to 90%	Negligible
Rain	1.5 cm (.60 inch) per hour maximum	
Snow, Sleet, Hail	20 cm (8 inches) of snow maximum in 24 hours with 36 cm (14 inches) of snow maximum accumulation. Sleet and hail account for less than 1 percent of frozen precipitation. Maximum hailstone diameter is 1 cm (3/8 inches). The site is subject to blowing and drifting snow. Glaze occurs approximately six days a year.	

Blowing Dust (dust picked locally from surface and blown about in clouds or sheets)	Restricts visibility up to 10 km (6 miles) or less. May completely obscure sky. Occurs approximately 10 times a year. Approximately 24-hour duration for each occurrence.
Solar Radiation	300 plus days direct sunlight per year
Wind	129 km/hr (80 mph) (American National Standards Institute A58.1)

4.2 Vapor Mixing System Inlet Conditions (from tank)

See Table 1 for a listing of the chemical compounds of concern, reported concentrations, and CES as identified by the TRP (Mahlum, et al., 1994).

Temperature, 27°C to 38°C (80°F to 100°F)
Relative humidity, 100%
Average natural breathing rate estimate, 141 l/min (5 cfm) (Claybrook, 1991)

Maximum flow rate out of C-103 is calculated to be about 0.4 m^3/min (15 cfm) above natural breathing flow rate (due to rapid decreases in barometric pressure).

Ammonia and nitrous oxide are generated in the waste at a fixed rate. Therefore, at higher flow rates the concentration of these chemicals decrease proportionally. The organic chemicals, however, are evaporated from the organic layer and at these low flow rates are conservatively assumed to remain constant.

4.3 Vapor Mixing System Outlet Conditions

Each chemical compound of concern shall be reduced in concentration to at or below its CES as identified by the TRP report (Mahlum, et al., 1994). Analysis will only be performed for those chemicals listed in the TRP report as being above the CES. This will satisfy the TPA milestone. However, to address odor concerns the concentrations shall be reduced even more to as low as reasonably achievable.

The minimum required fresh air flow is determined by identifying the chemicals that have the highest ratio of reported concentration to its CES. For the generated inorganic gases, ammonia and nitrous oxide are reported to be present at essentially equal concentrations (304 ppm) and both have the same CES (25 ppm). A conservative goal is to reduce chemicals to one-half the CES. The minimum required mixing ratio for these gases then is 304/(.5 x 25) = 24. A conservative assumption is that the reported concentration was obtained at a natural breathing rate of 141 l/min (5 cfm). Therefore a conservative minimum required fresh air flow rate for these gases is 141 l/min (5 cfm) times the minimum required mixing ratio, or 141 x 24 = 3.4 m^3/min (120 cfm). This is true for any flow rate from the tank since ammonia and nitrous oxide are generated at a constant rate.

For the organic chemicals, the highest concentration to CES ratio is for Benzene (0.3 ppm : 0.1 ppm). The minimum required mixing ratio is 0.3/(0.5 x 0.1) = 6. But since the concentration for organic chemicals is assumed to remain constant, the minimum required fresh air flow rate must be calculated at the maximum expected tank flow rate. The maximum flow is estimated at 424 l/min (15 cfm) + 141 l/min (5 cfm) = 565 l/min (20 cfm). Therefore the minimum required fresh air flow rate is 565 l/min (20 cfm) x 6 = 3.4 m^3/min (120 cfm).

To address odor concerns, a blower capable of producing 22.6 m^3/min (800 cfm) of fresh air has been selected based on physical size and electrical power requirements. See Table 1 for resulting mixed concentrations and comparisons to CES and odor thresholds assuming a tank flow of 141 l/min (5 cfm). For the organic chemicals of concern, the mixed concentrations are all less than 2% of the CES. The ammonia and nitrous oxide are both at 8% of the CES.

See Table 2 for the same comparisons assuming a tank flow of 0.57 m^3/min (20 cfm). For the organics, the mixed concentrations are all less than 8% of the CES. Since ammonia and nitrous oxide are generated at a fixed rate, the concentrations remain the same as the 141 l/min (5 cfm) case or at 8% of the CES.

4.4 Design Interface

The design interfaces identified for the mixing system are of the following categories: hardware, functional, human factors engineering, and safety.

Hardware interfaces include those between the mixing system and the existing breather filter and the existing electrical power supply.

Functional interfaces:

Maintenance - Includes duct connection to the existing breather filter outlet (Flanders[1] G1 housing), and to site electrical power supply.

Operation - Will consist of mixing blower on/off switch and tank flow rate/totalizer local indication and status lights. Operations will be able to visually determine from a distance if the fresh air flow has decreased below a set point for some reason.

Sampling - Includes vapor stream sample ports to allow Industrial Hygiene and Health Physics personnel to perform periodic confirmatory sampling if required.

Human factors engineering shall be applied to the functional interfaces identified above. The system shall be designed so as to minimize the

[1]Flanders Filters, Inc., Washington, North Carolina.

number of personnel and time required to perform operational, maintenance, and periodic sampling functions.

Safety interfaces include those for the worker such as high temperature, pinch points, surface radioactive contamination, and overexposure to gaseous emissions from the mixing system. Also of concern is the impact on the tanks due to loss of power or reduction in fresh air flow.

Industrial Hygiene has performed source monitoring on all potential leak paths in the past. A few leak paths have been identified on the central pump pit of both C-102 and C-103. Operations and engineering will decide on a reliable sealing method for all potential leak paths and attempt to eliminate these leaks.

4.4.1 Breather Filter

The mixing system will be designed to connect with the breather filter exit flange (4-inch diameter, 150 lb.).

4.4.2 Electrical

Sufficient power to supply a 2 horsepower, 230/460 volt motor is required. Electrical and equipment grounding will be required.

The design and construction of this equipment shall comply with the requirements of National Fire Protection Agency (NFPA) 70. The specific application of this equipment requires that it be designed to function and to be serviced in an exposed environment as previously defined. All equipment shall be suitable for the application and shall be listed by an approved, nationally recognized testing laboratory.

4.4.3 System Performance

System performance can be verified in several ways: by calculation, by field sampling of stack, by source sweeps of potential fugitive leak paths, and by monitoring pressure in the three tanks. However, it is not a requirement that a measurable negative pressure be attained in the tanks.

Determining the concentration of chemicals of concern after mixing is a simple calculation. The reported concentration (C) in the tank is divided by the mixing ratio. The mixing ratio is the fresh air flow rate (Q_f) divided by the tank flow rate (Q_t). The equation is $C/(Q_f/Q_t)$. To illustrate, the concentration of ammonia after mixing, given a tank flow of 141 l/min (5 cfm) and fresh air flow of 22.6 m^3/min (800 cfm), would be 1.9 ppm [304 ppm/(800/5)]. The CES of ammonia is 25 ppm and the odor detection level is 17 ppm (see Table 1).

A confirmation of the mixed concentration can be obtained by collecting field samples from the stack downstream of the drawtube/venturi. This will require limits of detection in the ppm range and can be obtained using hand-held real time instruments. Grab samples for laboratory analysis can also be

taken. A sample port will be provided with a 1/4" Swagelok®[2] tube fitting and cap on the outlet.

How well fugitive leak paths can be sealed can be evaluated by: 1) performance of industrial hygiene source monitoring (source sweeps) during a falling barometer, 2) monitoring tank pressures of the three tanks, and/or 3) comparison of the mixing system tank flow rate (flow out) with inlet flow.

4.4.4 Radioactive Particulate Sampling

Periodic confirmatory sampling (about once per year) will be performed via a new three-way valve on the breather filter. An existing mobile sampler will be used to pull samples from a normally capped 2-inch diameter male threaded connection. Mobile samplers are available on site but a 4-inch filter holder will have to be procured. This sampling can be performed without interruption of the mixing system.

4.5 Instrumentation and Control

Instrumentation will consist of a fresh air flow or pressure switch that will interface with the mixing system status lights in the following manner.

Red light - Fresh air flow is above the set point (normal condition).

Green light - Fresh air flow is below the set point (abnormal condition).

No light - Power is off.

Local indication of tank exhaust flow rate and a tank flow totalizer will be required. Extra contacts will be provided for remote monitoring if required in the future.

Instrumentation shall be traceable to National Institute of Standards and Technology.

Control of the system will be simply an on/off switch of the mixing blower.

4.6 Material Selection

All materials will be selected appropriate for the intended application and environment. Design life is 10 years.

4.7 Tank Vapor Condensate

Consideration shall be given to the potential for tank vapor to condense prior to entering the mixing stack. The stack velocity of approximately 2,500 fpm will most likely prevent any significant accumulation of condensate

---

[2]Swagelok® is a registered trademark of Crawford Fitting Company.

in the bottom of the stack or skid. The main concern if vapors were to condense is that the condensate may accumulate on the skid and cause an odor incident.

4.8 Transportability

The stack shall be capable of being disassembled to facilitate transporting. It shall also be capable of being moved by forklift or crane.

4.9 Design Verification

Verification of the design of the mixing system will be documented accordingly per WHC-CM-6-1, EP-4.1. Approval designator will be ESQ.

5.0 ORGANIZATIONAL RESPONSIBILITIES

Listed below are tasks assigned to each organization involved in the project. The items listed are the major activities for each group and may not include all areas of responsibilities that may be implied by the specific task.

5.1 Customer

Customer:	**JW Osborne**	**(Tank Vapor Issue Resolution)**

The Customer for this project is Jerry Osborne who is the program manager for the Vapor Issues Resolution Safety Program. The Customer will have overall input on the requirements and direction for the mixing system. The Customer will provide funding and scheduling requirements for the activities and perform the ORR before installation and before turnover to Operations.

5.2 Responsible Manager and Engineer

Responsible Manager:	**TL Moore**	**(Characterization Equipment Development)**
Responsible Engineer:	**RB Conrad**	**(Characterization Equipment Development)**

The Responsible Manager has overall responsibility in implementing the design and installation of the mixing system. All other organizations will be responsible to the Responsible Manager and Engineer. The following are the major tasks of the Responsible Manager and Engineer.

5.2.1 Provide project management, coordination, and direction on the mixing system.

5.2.2 Overall project scheduling and budget development.

5.2.3 Overall design review of the mixing system and site work.

5.2.4 Prepare the ETP.

5.2.5 Support and provide input to the environmental and safety assessment individuals with their tasks.

5.2.6 Provide lead on design review of the mixing system.

5.2.7 Assist in system ATPs and system turnover ABU.

5.2.8 Provide input on site work design, as required.

5.2.9 Provide coordination with other tank activities tied to the mixing system.

5.2.10 Provide mechanical support on the program.

5.2.11 Provide comment resolution, input, and support during design reviews on the mixing system.

5.2.12 Provide lead coordination and direction during testing and final turnover of the mixing system. Provide and lead ATP documentation.

5.2.13 Provide functional design criteria for the mixing system to the ETP.

5.2.14 Provide required documentation as identified in the ABU checklist.

5.3 Lead Design and Test Engineer

Lead Design and Test Engineer: GA Barnes (Characterization Equipment Development)

The Lead Design and Test Engineer is responsible for the detail design fabrication and test of the mixing system and shall provide comment resolution, input, and support during design reviews on the mixing system. He is also responsible to perform development control as described in Section 3.10.

5.4 Electrical Support Engineer

Electrical Support Engineer: RE Merriman (Electrical Engineering)

The Electrical Support Engineer will provide electrical support on the skid mounted mixing system and site electrical power supply design.

5.4.1 Assist in identifying appropriate electrical design codes.

5.4.2 Provide electrical design support on the project.

5.4.3 Responsible for interfacing with associated activities and organizations.

5.4.4 Provide comment resolution, input, and support during design reviews on the mixing system and site electrical systems.

5.4.5 Provide design, guidance, and direction on site work design and installations as required. Develop Engineering Change Notices (ECNs) as needed.

5.4.6 Coordinate testing and final turnover of electrical systems.

5.5 Equipment Testing Engineer

Equipment Testing Engineer: PV Meeuwsen (Equipment Testing Laboratory)

The Equipment Testing Engineer shall be responsible to provide facilities (305 Building), technicians, and fabrication support as required for preliminary testing, fabrication, and functional shop tests. He will also prepare both the shop and field ATP's.

5.6 East Tank Farms Ventilation Systems Engineer

East Tank Farms Ventilation Systems Engineer: SR Pierce (East Systems Engineering)

The East Tank Farms Ventilation Systems Engineer will provide all required support on the task.

5.6.1 Responsible for interfacing with associated activities and organizations.

5.6.2 Provide comment resolution, input, and support during design reviews on the mixing system if required.

5.6.3 Will be the cognizant engineer for the system after the evaluation phase is complete and the system has been turned over to Operations.

5.7 Installation/Acceptance Engineer

Installation/Acceptance Engineer: RW Reed (Manager, Installation/ Acceptance Engineering)

The Installation/Acceptance Engineer will be responsible for the field work plans and/or JCS documentation for installation of the mixing system in the tank farm. The following are the major responsibilities of this engineer and may not be all inclusive.

5.7.1 Provide all required procedures for maintenance, craft personnel, and operators for installation and operation of the mixing system in the tank farm. Characterization Equipment Development will provide

operation and preventative maintenance requirements, and recommended spare parts list and funding.

5.7.2 Provide input, reviews, and approval on such activities as the design, training, operating, maintenance, and safety documents for the mixing system.

5.7.3 Act as the cognizant engineer, on behalf of East Systems Engineering, as the design authority, and customer for Plant Engineering for all structures, systems, and equipment provided by this project.

5.7.4 Responsible for providing engineering input to the preparation, planning, scheduling, and performance of the JCS work packages in the tank farms.

5.7.5 Will help define what is required for partial and final ABU forms.

5.7.6 Will accept primary engineering responsibility for the mixing system provided by this project after installation and during performance of the OTP. After completion of the OTP, the system will be turned over to East Tank Farms Ventilation Cognizant Engineer.

5.8 Quality Control Engineer

Quality Control Engineer: HK Ananda (Tank Waste Remediation System (TWRS) Programs Quality Assurance)

The Quality Control Engineer will ensure compliance.

5.8.1 Review and approve documentation provided by this work including this ETP, design, ATP, etc.

5.8.2 Provide design review, comment resolution, input, and support during design reviews on the mixing system.

5.9 Industrial Safety Engineer

Industrial Safety Engineer: JA Harvey (TWRS Industrial Health/Safety)

The Industrial Safety Engineer will be the main safety contact and is responsible for ensuring that the mixing system meets all applicable safety codes and standards. This position will interface with other safety organizations such as Industrial Hygiene, Fire Protection, Nuclear, and Radiation Control as required.

5.9.1 Provide input to documentation such as design and ATP as required, including applicable safety codes and standards.

5.9.2 Review and approve documentation provided by this work including the this ETP, design, ATP, etc.

5.10 Environmental Compliance Engineer

Environmental Compliance Engineer: LA Garner (Tank Farm Environmental Compliance)

The Environmental Compliance Engineer will ensure compliance with environmental regulations.

5.10.1 Review and approve documentation provided by this work including the design, ATP, etc.

5.10.2 Provide design review, comment resolution, input, and support during design reviews on the mixing system.

5.10.3 Provide appropriate environmental documentation. This includes preparing a documented plan and conducting an independent assessment of operational readiness, with respect to environmental protection, and verifying that all required environmental documentation is in place relative to this task in accordance with WHC-CM-1-5, Standard Operating Practices, Section 1.2, "Operational Readiness Reviews."

5.11 Environmental Permit Engineer

Environmental Permit Engineer: CE Sowa (Air & Water Permitting)

The Environmental Permit Engineer will provide support in obtaining the necessary permit documentation. This approach has been presented to the Washington State Department of Health who approved the concept and a tank flow range between 0 and 425 l/m (15 cfm) above the average natural breathing rate as required. The Washington State Department of Health directed that periodic confirmatory measurement of radioactive particulate emissions is required only if a constant flow above the average breathing rate is pulled from the tank. A continuous record sampler is not required. Air & Water Permitting will submit a request to the WDOE to allow an operating range of 425 l/m (15 cfm) above the average natural breathing rate. This request is being made in case unforseen field conditions make it desirable to operate at a constant flow rate above the natural breathing rate.

5.11.1 Prepare appropriate documentation and interface with appropriate regulators.

5.11.2 Provide comment resolution, input, and support during design reviews on the mixing system if required.

5.12 National Environmental Policy Act (NEPA)

NEPA: MT Jansky (NEPA Services)

NEPA Services has reviewed the concept and has issued a letter indicating that it does not require additional NEPA review. This letter is still valid although the concept described in this ETP is slightly different than that described in the letter.

5.13 Safety Assessments Engineer

Safety Assessments Engineer: WG Farley (SST Safety Analysis)

The Safety Assessments Engineer will perform a USQ Safety Evaluation.

5.14 Operational Readiness Review Engineer

Operational Readiness Review Engineer: SJ Dechter (TWRS Plant)

Preliminary direction is that the ORR will consist of a memorandum of understanding to the U.S. Department of Energy, Richland Operations Office, stating that the hazards will have been evaluated per the USQ and appropriate approvals from regulators are being obtained. Preliminary indications are that this task is less than hazard category 3 and as such the readiness assessment will be via a plant generated checklist.

5.15 TWRS Operations Support

TWRS Operations Support: DL Sparks (ETF Field Support)

TWRS Operations Support will provide Operations support on the mixing system during installation and will be the end user of the system.

5.15.1 Provide input and reviews on the mixing system designs to determine site adequacy and interface problems in the tank farms.

5.15.2 Responsible for installation of the mixing system. This may include installation of all ancillary components as well as wiring and piping needs.

5.15.3 Provide resources to complete the work packages and field installations, as required.

5.15.4 Will assume ownership of the mixing system at turnover.

5.15.5 With engineering's assistance, will identify a sealing method and seal unfiltered leak paths in C-101, C-102, and C-103.

5.15.6 Will add to operators routines a regular check of the mixing system to ensure proper operation.

5.16 TWRS Industrial Hygienist

Industrial Hygienist Scientist:	**ER Hewitt (TWRS Industrial Health/Safety)**

Senior Industrial Hygienist assesses employee exposure by interpreting monitoring results, makes decisions on ability of engineering controls to control worker exposures, and makes recommendations to management on need for engineering controls and personal protective equipment.

5.17 ABU Requirements

This section will describe the turnover requirements on this program prior to final acceptance of the mixing system. The following table from the ABU document is included to identify tasks to be completed and responsible individuals. A final ABU will be prepared upon final turnover to Operations.

6.0 SCHEDULE

The mixing system will be available for installation by April 30, 1995, and installation will be completed by May 15, 1995. The ATP will be performed after installation, followed by the OTP. Completion of the ATP will serve as meeting the requirements of TPA Milestone No. M-40-07. See separate schedule for details.

WHC-SD-WM-ETP-115
Rev 0

DOCUMENTATION REQUIRED for ACCEPTANCE FOR BENEFICIAL USE

DESCRIPTION		RESPONSIBILITY
ENGINEERING		
• Engineering Task Plan (ETP)	[x]	Conrad
• Activity Schedule	[x]	Conrad
• Final Safety Analysis Report (FSAR)	[ ]	
• Interim Safety Basis - update	[ ]	
• Safety Assessment (USQ)	[x]	Farley
• Safety Equipment List (SEL)	[ ]	
• Operational Safety Requirements (OSR) - or update existing	[ ]	
• Operational Safety Document(s) (OSD) - or update existing	[ ]	
• Functional Design Criteria (FDC)	[ ]	
• Conceptual Design Report (CDR)	[ ]	
• Supplemental Design Requirements Document (SDRD)	[ ]	
• System Design Description (SDD)	[ ]	
• Test Plan/Specifications	[ ]	
• Acceptance Test Procedures (ATPs) and Final Test Report	[x]	Meeuwsen
• Operational Test Procedures (OTPs) and Final Test Report	[x]	Strickler
• Environmental Impact Statement	[ ]	
• Environmental Report	[ ]	
• Environmental Permit	[x]	Sowa
• Hazardous Waste Disposal Plan/Procedures	[ ]	
• Solid Waste Disposal Plan/ Procedures	[ ]	
• Stress/Seismic Analysis	[ ]	
• Stress/Design Report	[ ]	
• Design Specifications/Report	[ ]	
• Equipment Specifications	[ ]	
• Procurement Specifications	[x]	Barnes
• Construction Specifications	[ ]	
• Essential Material Specifications	[ ]	
• Final Design Drawing(s)	[x]	Barnes
• Installation Drawing(s)	[x]	Barnes/ Merriman
• Installation Work Plan	[ ]	
• As-built Drawing(s)	[x]	Barnes
• Interface Control Drawing(s)	[ ]	
• IEFD Drawing(s)	[ ]	
• Systems Drawing(s)	[ ]	
• Drawing Tree	[ ]	

DESCRIPTION		RESPONSIBILITY
ENGINEERING cont'd		
• Incorporate outstanding project generated ECNs	[ ]	
• Software Configuration Management Plan	[ ]	
• System Requirements Specs.	[ ]	
• Software Design Description	[ ]	
• Validation & Verification Records	[ ]	
TRAINING		
• Training Plan	[ ]	
• Training Manuals	[ ]	
• Training to Operating Crews	[x]	Reed
• Training to Maintenance Crews	[x]	Reed
• Training Mock-up	[ ]	
OPERATIONS/ MAINTENANCE		
• Operating and Maintenance Manuals	[ ]	
• Operating Procedures	[x]	Reed
• Surveillance Procedures	[x]	Reed
• Calibration Procedures	[x]	Reed
• Preventative Maintenance Procedures	[x]	Reed
• Repair/Maintenance Procedures	[x]	Reed
• Functional Check Procedures	[ ]	
• CBRS (PM/S) Data Sheets	[ ]	
QUALITY ASSURANCE		
• Inspection Plan	[ ]	
• QAPP	[ ]	
• QAPjP	[ ]	
PROCUREMENT ACTIVITIES		
• Vendor Information Files	[x]	Conrad
• Comprehensive Equip. List	[ ]	
• Spare Parts List	[x]	Conrad
• Spare Parts in Stock	[ ]	
• _____	[ ]	
• _____	[ ]	
• _____	[ ]	

7.0 COST ESTIMATE

Task	Responsible Organization	Funding Req'mts
1. Project Lead	Responsible Manager and Engineer	$80,000.00
2. Mixing System Design/Analysis	Characterization Equipment Development	50,000.00
3. Mixing System Fabrication	306 Building	30,000.00
4. Electrical Design	Electrical Support Engineer	10,000.00
5. Installation	Crafts, Operations, etc.	20,000.00
6. Safety/Environmental Assessments	Safety and Environmental Organizations	10,000.00
7. Environmental Permit	Environmental Permits	10,000.00
8. Industrial Safety Support	Industrial Safety	10,000.00
9. Industrial Hygiene Support	Industrial Hygiene	50,000.00
10. Quality Assurance	Quality Assurance	10,000.00
11. JCS Support	Test Engineering	30,000.00
TOTAL		310,000.00

8.0 QUALITY ASSURANCE

Quality Assurance requirements for activities defined within the defined scope of work shall be in accordance with the U.S. Department of Energy, Richland Operations Office Order 5700.6C, and WHC-CM-4-2, Quality Assurance Manual. These documents meet the American Society of Mechanical Engineers (ASME), Quality Assurance Program Requirements for Nuclear Facilities (ASME NQA-1) as the quality standard for this work. The overall system being Safety Class 3, a graded approach towards the Quality Assurance shall be implemented to be cost effective. The main intent is to provide assurance that the facility and equipment are adequate to meet task requirements; the prepared plans and specifications adequately state Quality Assurance requirements; fabrication and construction are performed in accordance with the design; and tests confirm the adequacy of design and the quality of construction and manufactured components, where appropriate.

The final assembled system will be tested to the requirements of its approval designator and safety class. Therefore, for the individual components, if purchased as commercial grade, the ATP can be treated as dedicating them for the system, although such dedication is not mandatory for Safety Class 3 systems.

9.0 APPROVAL DESIGNATOR

Approval Designator ESQ applies to the mixing system design, with Designator SQ for overall work scope of the mixing system installation on C-103. ECNs or drawings related to the electrical power supply requirements will have approval designator SQ. The shop ATP will have a Q designator. Preliminary testing designator is not applicable.

10.0 SAFETY CLASS

The overall safety class of this system is Safety Class 3.

The safety function performed by this system is to protect the facility worker from being overexposed to passive emissions from tank C-103 which is a passively ventilated tank. It is to be installed downstream of the existing passive breather filter. Failure of this system to provide this function may result in a facility worker within the immediate vicinity to be overexposed to passive emissions. The status lights will provide visual indication from a safe distance that the system is functioning properly. Therefore, the flow switch/status light circuit is Safety Class 3. All other components are Safety Class 4.

C-101 is not a watch list tank.

C-102 is on the organic watch list tank and is currently being pumped.

C-103 is on the organic watch list. It is no longer a USQ tank. It has been determined to be NFPA Class IIIB, which is the least flammable class (Postma, 1994).

11.0 REFERENCES

Claybrook, S. W., and T. M. Burke, "Evaporation Modeling for Tank C-103," WHC-SD-WM-ER-127, Rev. 0, dated 1991. Numerical Applications, Inc., and Westinghouse Hanford Company, both of Richland, Washington.

Conrad, R. B., "Engineering Evaluation of Alternatives for Treatment of Tank 241-C-103 Vapor Space," WHC-SD-WM-ES-281, Rev. 0, dated June 1994. Westinghouse Hanford Company, Richland, Washington.

Huckaby, J. L., and M. S. Story, "Vapor Characterization of Tank 241-C-103," WHC-EP-0780, Rev. 0, dated June 1994. Westinghouse Hanford Company, Richland, Washington.

Mahlum, D. D., J. Y. Young, and R. E. Weller, "Toxicologic Evaluation of Analytes, from Tank 241-C-103," PNL-10189, dated 1994. Pacific Northwest Laboratory, Richland, Washington.

Osborne, J. W., and J. L. Huckaby, "Program Plan for the Resolution of Tank Vapor Issues," WHC-EP-0562, Rev. 1, dated May 1994. Westinghouse Hanford Company, Richland, Washington.

Postma, A. K., "Safety Analysis of Exothermic Reaction Hazards Associated with the Organic Liquid Layer in Tank 241-C-103," WHC-SD-WM-SARR-001, Rev. 0, dated March 1994. Westinghouse Hanford Company, Richland, Washington.

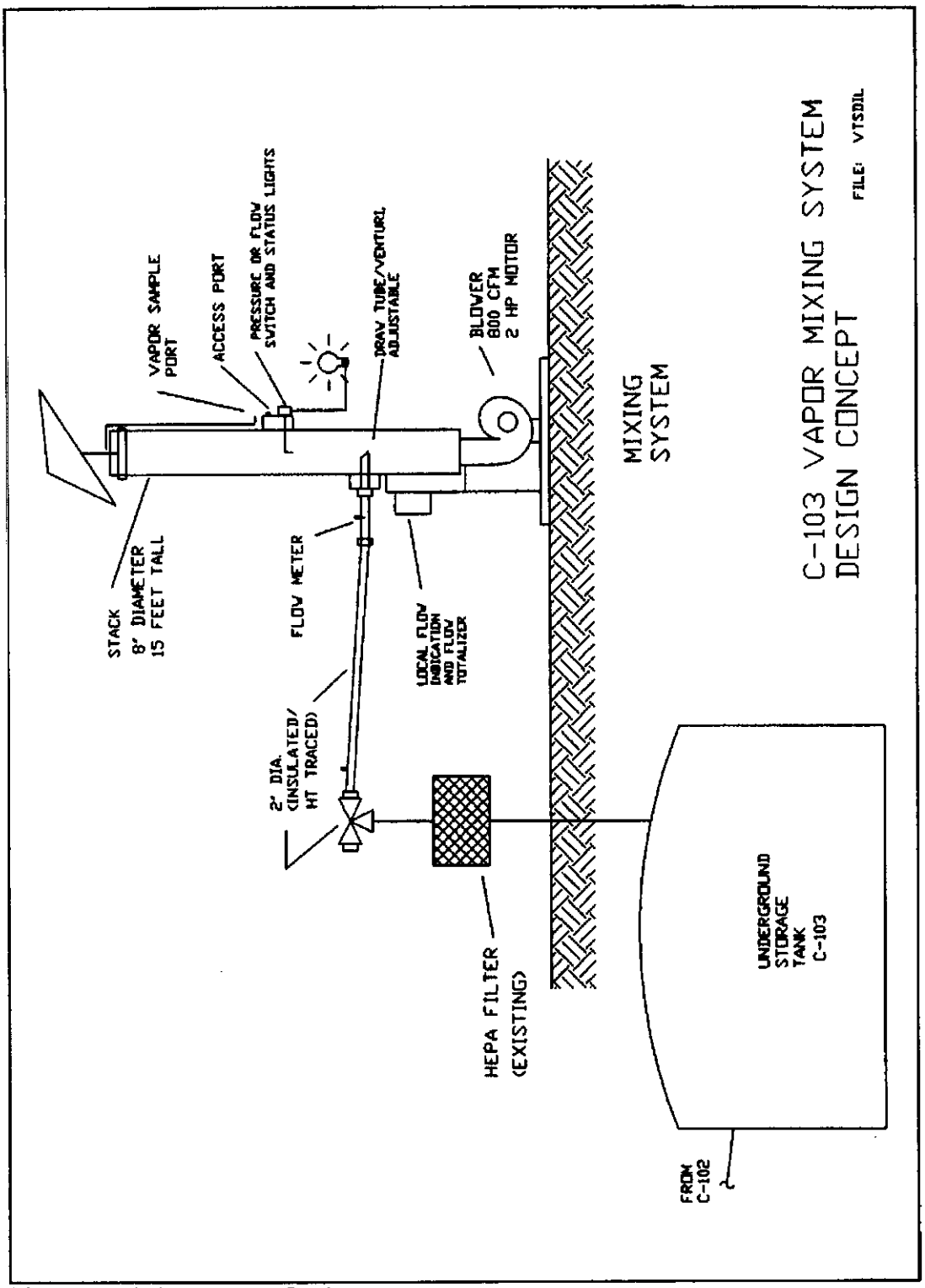

Figure 1 Mixing System Design Concept

TABLE 1
C-103 VAPOR TREATMENT SYSTEM
ENVIRONMENTAL AND WORKER IMPACTS

Quantity of Chemicals Emitted to Environment					Worker Exposure Allowables				Mixed Concentration	
Q(tank flow cfm)	5								Fresh air (cfm) Ratio	800 / 160
Chemical*	M	C (ppm)*	lb/hr	lb/yr	CES* ppm	Percent of CES	Odor* (ppm) I	Odor* (ppm) D	Mixed Concentration (ppm)	% of CES
ORGANIC										
Acetonitrile (75-05-8)	41.05	13	4.09E-04	3.49E+00	20	65	0.400	1160.00	0.08	0
Benzene (71-43-2)	78.12	0.3	1.80E-05	1.53E-01	0.1	300	0.780	61.00	0.00	2
1,3-Butadiene (106-99-0)	54.09	0.06	2.49E-06	2.13E-02	0.19	32	0.099	0.45	0.00	0
n-Butanol (71-36-3)	74.12	28	1.59E-03	1.36E+01	50	56	0.050	1.20	0.18	0
n-Dodecane (112-40-3)	170.34	46	6.01E-03	5.13E+01	120	38			0.29	0
2-Hexanone (591-78-6)	100.16	0.6	4.61E-05	3.94E-01	1	60	0.068		0.00	0
Methylene chloride (75-09-2)	84.93	1.6	1.04E-04	8.90E-01	50	3	1.200	160.00	0.01	0
Propane nitrile (107-12-0)	55	5.3	2.23E-04	1.91E+00	6	88	1.600	1.60	0.03	1
Tributyl phosphate (126-73-8)	266	0.5	1.02E-04	8.71E-01	0.2	250			0.00	2
n-Tridecane (629-50-5)	184.37	53	8.90E-03	7.61E+01	120	53			0.39	0
Total Organics		158.36	1.74E-02	1.49E+02					0.99	
INORGANIC										
Ammonia (7664-41-7)	17	304	3.96E-03	3.38E+01	25	1216	0.043	17.00	1.90	8
Nitrous oxide (10024-97-2)	44	305	1.03E-02	8.79E+01	25	1220			1.91	8

*PNL-10189, Toxicologic Evaluation of Analytes from Tank 241-C-103, November 1994, Pacific Northwest Laboratory, Richland, Washington.
C = Concentration
CES = Consensus Exposure Standard
D = Detection
I = Inclusive Range (lowest number)
M = Molecular Weight

TABLE 2
C-103 VAPOR TREATMENT SYSTEM
ENVIRONMENTAL AND WORKER IMPACTS

Quantity of Chemicals Emitted to Environment					Worker Exposure Allowables				Mixed Concentration	
Q(tank flow cfm)	20								Fresh air (cfm) Ratio	800 / 40
Chemical*	M	C (ppm)*	lb/hr	lb/yr	CES* ppm	Percent of CES	Odor* (ppm) I	Odor* (ppm) D	Mixed Concentration (ppm)	% of CES
ORGANIC										
Acetonitrile (75-05-8)	41.05	13	1.64E-03	1.40E+01	20	65	0.400	1160.00	0.33	2
Benzene (71-43-2)	78.12	0.3	7.19E-05	6.14E-01	0.1	300	0.780	61.00	0.01	8
1,3-Butadiene (106-99-0)	54.09	0.08	9.95E-06	8.50E-02	0.19	32	0.099	0.45	0.00	1
n-Butanol (71-36-3)	74.12	28	6.36E-03	5.44E+01	50	56	0.050	1.20	0.70	1
n-Dodecane (112-40-3)	170.34	46	2.40E-02	2.05E+02	120	38			1.15	1
2-Hexanone (591-78-6)	100.16	0.6	1.84E-04	1.57E+00	1	60	0.068		0.02	2
Methylene chloride (75-09-2)	84.93	1.6	4.17E-04	3.56E+00	50	3	1.200	160.00	0.04	0
Propane nitrile (107-12-0)	55	5.3	8.94E-04	7.64E+00	6	88	1.600	1.60	0.13	2
Tributyl phosphate (126-73-8)	266	0.5	4.08E-04	3.48E+00	0.2	250			0.01	6
n-Tridecane (629-50-5)	184.37	63	3.56E-02	3.04E+02	120	53			1.58	1
Total Organics		158.36	6.96E-02	5.95E+02					3.96	
INORGANIC										
Ammonia (7664-41-7)	17	304	3.96E-03	3.38E+01	25	1216	0.043	17.00	1.90	8
Nitrous oxide (10024-97-2)	44	305	1.03E-02	8.79E+01	25	1220			1.91	8

*PNL-10189, Toxicologic Evaluation of Analytes from Tank 241-C-103, November 1994, Pacific Northwest Laboratory, Richland, Washington.
C = Concentration
CES = Consensus Exposure Standard
D = Detection
I = Inclusive Range (lowest number)
M = Molecular Weight

Tank 241-C-103

TANK DESCRIPTION	
Type	Single Shell
Constructed	1943-1944
In-service	8/1946
Diameter	22.9 m (75 ft)
Operating Depth	469.9 cm (185 in)
Design Capacity	2,006 kL (530 kgal)
Bottom shape	dish
Ventilation	Passive
TANK STATUS	
Total Waste Volume	273 kL (72 kgal)
Supernatant Volume	2 kL (1 kgal)
Retained Gas Volume	N/A
Retained Gas - Sludge Volume	N/A
Retained Gas - Salt Cake Volume	N/A
Salt Cake Liquid Volume	N/A
Salt Cake Solid Volume	N/A
Sludge Volume	271 kL (72 kgal)
Surface Level (4/29/2003)	85.5 cm (33.7 inches)
PCSACS Surface Level (4/29/2003)	85.5 cm (33.7 inches)
Temperature (10/1/2002 - 9/30/2003)	33.9°C - 43.9°C (93.0°F - 111.0°F)
Temperature (2/26/2004)	33.7°C - 38.9°C (92.7°F - 102.0°F)
Volume Effective Date	10/1/2003
Recent Sampling:	
Core Samples	1/17/1995 - 2/9/1995
Grab Samples	12/5/2001 - 12/6/2001
Vapor Samples	5/25/1994
SAFETY PROFILE	
Integrity	Sound
Flammable Gas Waste Group	C
Former Safety Issues	Organic (solvent)
Relative Vapor Toxicity Ranking (per Intertox Report)	1
Air Monitoring Zones	Breather Filter Pump Pit (included in C-Farm AMZ)
TOC Content	5,700 kg
Heat Load Estimate	32,000 BTU/hr

Tank Summary Sheet updated on: March 4, 2004

KENNEWICK, WASHINGTON

NCDC 1971-2000 Monthly Normals

	Jan	Feb	Mar	Apr	May	Jun	Jul	Aug	Sep	Oct	Nov	Dec	Annual Monthly
Mean Max. Temperature (F)	40.4	47.9	58.0	66.2	74.1	81.6	89.3	88.9	79.5	66.3	50.4	41.1	65.3
Highest Mean Max. Temperature (F)	48.6	54.2	62.4	71.2	79.6	87.6	97.0	93.5	85.8	72.5	56.1	48.5	97.0
Year Highest Occurred	1999	1991	1992	1987	1992	1992	1998	1977	1990	1988	1990	1974	1998
Lowest Mean Max. Temperature (F)	23.9	34.4	51.4	61.6	65.9	75.9	80.9	84.4	72.9	63.4	36.3	27.3	23.9
Year Lowest Occurred	1979	1989	1993	1975	1977	1991	1993	1976	1985	1984	1985	1985	1979
Mean Temperature (F)	34.2	39.6	47.2	54.3	61.7	68.7	75.2	74.7	65.7	54.1	43.1	35.2	54.5
Highest Mean Temperature (F)	42.8	44.1	51.0	58.9	66.1	73.8	82.1	79.5	70.9	60.0	48.5	41.5	82.1
Year Highest Occurred	1990	1991	1983	1987	1993	1992	1998	1977	1990	1988	1990	1999	1998
Lowest Mean Temperature (F)	18.5	26.9	42.2	49.5	56.5	64.5	69.1	70.5	60.5	50.2	29.7	23.1	18.5
Year Lowest Occurred	1979	1989	1993	1982	1977	1991	1993	1995	1985	1984	1985	1985	1979
Mean Min. Temperature (F)	28.0	31.3	36.4	42.3	49.2	55.8	61.0	60.5	51.8	41.9	35.7	29.3	43.6
Highest Mean Min. Temperature (F)	37.4	36.0	41.0	46.6	53.8	60.0	67.2	65.5	56.8	47.6	41.4	36.1	67.2
Year Highest Occurred	1990	1983	1983	1987	1987	1992	1998	1977	1998	1988	1998	1999	1998
Lowest Mean Min. Temperature (F)	13.2	19.3	32.7	36.0	45.5	50.8	57.3	56.0	48.1	37.1	23.0	19.0	13.2
Year Lowest Occurred	1979	1989	1985	1982	1982	1976	1993	1995	1985	1984	1985	1985	1979
Mean Precipitation (in.)	1.05	0.79	0.77	0.52	0.65	0.38	0.25	0.39	0.37	0.60	1.08	1.16	8.01
Highest Precipitation (in.)	2.26	1.60	1.73	1.58	1.76	1.21	1.50	1.67	1.63	1.90	2.91	3.47	3.47
Year Highest Occurred	1980	2000	1984	1993	1980	1971	1992	1977	1980	1982	1973	1973	1973
Lowest Precipitation (in.)	0.23	0.02	0.03	0.00	0.03	0.00	0.00	0.00	0.00	0.00	0.09	0.17	0.00
Year Lowest													

Occurred	1984	1988	1994	1973	1992	1986	1989	2000	1999	1987	1976	999	1973
Heating Degree Days (F)	954.	712.	552.	326.	142.	32.	5.	4.	81.	340.	659.	924.	4731.
Cooling Degree Days (F)	0.	0.	0.	3.	39.	142.	318.	305.	101.	1.	0.	0.	909.

Western Regional Climate Center, wrcc@dri.edu

RMIS Viewprint Document Cover Sheet

This document was retrieved from the Records Management Information System (RMIS). It is intended for information only and may not be the most recent or updated version.

Accession #: **D198184544**

Document #: **ECN-620758**

Title/Desc:
SUPPL ECN TO DWG FOR INSTALLATION & USE OF TANK VAPOR MIXING SYS TO REDUCE CONCENTRATIONS OF NOXIOUS VAPORS

Pages: **9**

9513348.2572

ESSENTIAL

START ENGINEERING CHANGE NOTICE

Page 1 of 9

1. ECN № 620758

Proj. ECN 562

2. ECN Category (mark one)	3. Originator's Name, Organization, MSIN, and Telephone No.	3a. USQ Required?	4. Date
Supplemental [X] Direct Revision [] Change ECN [] Temporary [] Standby [] Supersedure [] Cancel/Void []	RB Conrad; Charact. Equipment (75220); H5-09; 376-7299	[X] Yes [] No	May 8, 1995
	5. Project Title/No./Work Order No. Tank Vapor Mixing System	6. Bldg./Sys./Fac. No. 241-C-103	7. Approval Designator SQ
	8. Document Numbers Changed by this ECN (includes sheet no. and rev.) H-2-73343, sht 1, Rev 3 •H-2-90718, sht 1, Rev 7 •H-2-90718, sht 2, Rev 2 •H-2-73948, sht 1, Rev 5 H-2-73957, sht 1, Rev 1	9. Related ECN No(s). N/A	10. Related PO No. N/A

11a. Modification Work	11b. Work Package No.	11c. Modification Work Complete	11d. Restored to Original Condition (Temp. or Standby ECN only)
[X] Yes (fill out Blk. 11b) [] No (NA Blks. 11b, 11c, 11d)	2E-95-~~327~~ 237	Cog. Engineer Signature & Date	NA Cog. Engineer Signature & Date

12. Description of Change

ETN-94-0167

1. Revise the NOZZLE & RISER SCHEDULE on drawing H-2-73343 as follows:

RISER NO.	SIZE	IDENTIFICATION	REFERENCE AND COMMENTS
241-C-103-R-2	12"	VENT PORT	AIR FILTER WITH VAPOR MIXING SYSTEM PER H-2-90718 SHTS 1 AND 2.

2. Revise H-2-73343 sht 1, (isolation drwg) as shown on page 5 of this ECN.
3. Revise H-2-90718 sht 1 as shown on page 3 and 4 of this ECN (add to notes and material list).
4. Revise H-2-90718 sht 2 as shown on page 6 of this ECN (installation details).
5. Revise H-2-73957 sht 1 as shown on page 7 of this ECN (electrical installation).
6. Revise H-2-73948 sht 1 as shown on page 8 of this ECN (connection to electrical power source).

An USQ Evaluation has been completed and documented under USQ Tracking Number TF-95-0022, rev 1 and by Internal Memo # 8H100-WGF-95018 from W. G. Farley to S. R. Callaway. Construction notes are provided on page 9 (not to be incorporated in drawings).

13a. Justification (mark one)

Criteria Change	[]	Design Improvement	[X]	Environmental	[]	Facility Deactivation	[]
As-Found	[]	Facility Const.	[]	Const. Error/Omission	[]	Design Error/Omission	[]

13b. Justification Details

The installation and use of the Vapor Treatment System will reduce the concentrations of noxious vapors so that work with in the tank farm can safely be done with out respiratory protection.

14. Distribution (include name, MSIN, and no. of copies)

G. A. Barnes	H5-09 (1)	RE Merriman	E6-27 (1)	SR Pierce	S5-05 (1)
D. C. Board	S1-57 (1)	G. N. Hanson	S5-01 (1)	AE Wilder	R1-51 (1)
D. E. Bowers	S6-01 (1)	M. N. Islam	R3-08 (5)		
R. B. Conrad	H5-09 (1)	L. D. Rakestraw	S5-05 (1)		
MD Vanderzanden	S2-24 (1)	J. E. Wells	S5-05 (1)		
STA 1	S5-59	STA 20	T4-00		
5	T4-30	IPF 7	T2-06		
15	S5-00				
16	E6-12	IPF 20	S4-43		

RELEASE STAMP

OFFICIAL RELEASE BY WHC

DATE MAY 11 1995

STA 4

A-82

9513348.2573

ENGINEERING CHANGE NOTICE	Page 2 of 9	1. ECN (use no. from pg. 1) 620758

15. Design Verification Required	16. Cost Impact				17. Schedule Impact (days)	
	ENGINEERING		CONSTRUCTION			
[X] Yes	Additional	[] $	Additional	[] $	Improvement	[]
[] No	Savings	[] $ N/A	Savings	[] $ N/A	Delay	[] N/A

18. Change Impact Review: Indicate the related documents (other than the engineering documents identified on Side 1) that will be affected by the change described in Block 12. Enter the affected document number in Block 19.

SDD/DD	[]	Seismic/Stress Analysis	[]	Tank Calibration Manual	[]
Functional Design Criteria	[]	Stress/Design Report	[]	Health Physics Procedure	[]
Operating Specification	[]	Interface Control Drawing	[]	Spares Multiple Unit Listing	[]
Criticality Specification	[]	Calibration Procedure	[]	Test Procedures/Specification	[]
Conceptual Design Report	[]	Installation Procedure	[]	Component Index	[]
Equipment Spec.	[]	Maintenance Procedure	[X]	ASME Coded Item	[]
Const. Spec.	[]	Engineering Procedure	[]	Human Factor Consideration	[]
Procurement Spec.	[]	Operating Instruction	[]	Computer Software	[]
Vendor Information	[]	Operating Procedure	[X]	Electric Circuit Schedule	[]
OM Manual	[]	Operational Safety Requirement	[]	ICRS Procedure	[]
FSAR/SAR	[]	IEFD Drawing	[]	Process Control Manual/Plan	[]
Safety Equipment List	[]	Cell Arrangement Drawing	[]	Process Flow Chart	[]
Radiation Work Permit	[]	Essential Material Specification	[]	Purchase Requisition	[]
Environmental Impact Statement	[]	Fac. Proc. Samp. Schedule	[]	Tickler File	[]
Environmental Report	[]	Inspection Plan	[]		[]
Environmental Permit	[]	Inventory Adjustment Request	[]		[]

19. Other Affected Documents: (NOTE: Documents listed below will not be revised by this ECN.) Signatures below indicate that the signing organization has been notified of other affected documents listed below.

Document Number/Revision	Document Number/Revision	Document Number Revision
6-TF-157 Rev 0, Change 0		
6-TF-157-C		
6-TF-157-QC		
SD-RE-TI-053 Rev 5		
TF-OR-EF-C-D		

20. Approvals

Signature	Date	Signature	Date
OPERATIONS AND ENGINEERING		ARCHITECT-ENGINEER	
Cog. Eng. SR Pierce	5/10/95	PE	
Cog. Mgr. GH Hanson	5/11/95	QA	
QA DC Board	5-11-95	Safety	
Safety MN Islam	5/9/95	Design	
Environ.		Environ.	
Originator RB Conrad,	5/9/95	Other	
Independent Reviewer MD Vanderzanden	5/9/95	DEPARTMENT OF ENERGY	
EL ENG J. WELLS	5/9/95	Signature or a Control Number that tracks the Approval Signature	
Stabilization Engineering VC Boyles	5/11/95		

A-7900-013-3 (11/94) GEF096

9513348.2574

ENGINEERING CHANGE NOTICE CONTINUATION SHEET Page 3 of 9 | 1. ECN 620758

VAPOR TREATMENT SYSTEM INSTALLATION

Reference Drawings:

H-14-100290	H-14-100291	H-14-100293	H-14-020113
H-14-030113	H-2-92087	ECN 615580	

ADD THE FOLLOWING NOTES TO H-2-90718, SHT 1.

21. Apply heat trace from the inlet to PN 32 of the Vapor Mixing System (H-14-100290) to the inlet of the G1 Filter Housing, PN 5 (H-2-90718) using the following criteria.

    A. Use self-regulating heating cable rated at 5 Watts/foot.

    B. Spiral wrap the 2" piping/flex duct with 2.4' to 3' of heating cable per foot of pipe (2-3/4" to 3-3/4" pitch).

    C. Use 18' to 24' of heating cable around the G1 Filter Housing (4 to 5 wraps).

    D. Use a power connection kit to connect power to the heat trace at the Vapor Mixing System. Use a connection kit with pilot light to terminate the heat trace circuit and indicate "energized".

    E. Mount pilot light in an easy to see location.

22. After installation of the heat trace, insulate per the following instructions.

    A. Insulate the exterior of the G1 Filter Housing with Armaflex II sheet insulation, 2" thick.

    B. Insulate the piping/flex duct/valves from the G1 Filter Housing to the inlet to PN 32 of the Vapor Mixing System (H-14-100290) with Armaflex II sheet or pipe insulation, 1" thick.

    C. Secure all insulation joints with Armstrong 520 adhesive. Apply in accordance to manufacturer's recommendations.

    D. Use aluminum bands as needed to hold the insulation in place.

    E. Finish the weather exposed surface of all insulation with Armstrong standard white Armaflex Finish. Apply in accordance to manufacturer's recommendations.

    F. The insulation shall not interfere with the removal of access doors (G1 Filter Housing), or the operation of valves, or DOP and sample ports, or the maintenance of electrical equipment, or the visibility of the heat trace pilot light.

9513348.2575

ENGINEERING CHANGE NOTICE CONTINUATION SHEET Page 4 of 9

1. ECN 620758

PARTS / MATERIAL LIST (add to H-2-90718 sht1)			
PART #	QTY -150	DESCRIPTION	MATERIAL/REF
100	X	INSTALLATION	
101	1	VAPOR MIXING SYSTEM	H-14-100290-010
102	2	VALVE, BALL, 2", FULL PORT, SST	APOLLO, #86-108-01A
103	1	FLEX HOSE, 2" SPIRALITE (20' LG.)	PACIFIC-ECKO, 2000 EPDM
104	2	CLAMP, HOSE, WORMDRIVE, 2"	WHC STORES, 0033-1270-290
105	2	CLAMP, HOSE, WORMDRIVE, 3"	WHC STORES
106	2	KING NIPPLE, 2"	300 SERIES SST
107	1	TEE, 2" PIPE NPT	ASTM A182, 304L SST
108	1	PLUG, 2" PIPE NPT	ASTM A182, 304L SST
109	AR	NIPPLE, PIPE NPT, 2", CLOSE	ASTM A312, GRADE TP 304L
110	AR	WIRE, 10GA, THHN, (BLACK AND GREEN)	
111	60 FT	HEAT TRACE, SELF-REGULATING	RAYCHEM CHEMELEX, 5BTV1CT
112		Not used	
113	1	PILOT LIGHT 120V NEON	RAYCHEM CHEMELEX, AM-L1N
114	1	CONNECTION KIT, PILOT LIGHT	RAYCHEM CHEMELEX, AMG-BC-111
115	AR	INSULATION, SHEET, 1" THICK (2 LAYERS) OR 2" THICK (1 LAYER)	ARMSTRONG, ARMAFLEX II
116	20 FT	INSULATION, FOR 2" PIPE, 1" THICK	ARMSTRONG, ARMAFLEX II
117	AR	WEATHER COATING, ARMSTRONG STANDARD WHITE ARMAFLEX FINISH	ARMSTRONG
118	AR	ADHESIVE, FOR INSULATION JOINTS	ARMSTRONG, ARMSTRONG 520
119	1	NIPPLE, 1/4", CLOSE, PIPE NPT	ASTM A182, 304L SST
120	1	TEE, 1/4", PIPE NPT	ASTM A182, 304L SST
121	1	PLUG, 1/4", PIPE NPT	ASTM A182, 304L SST
122	1	MALE CONNECTOR, 1/4" NPT TO 1/4" POLYETHYLENE TUBING	SWAGLOCK, 316 STAINLESS STEEL, SS-400-1-4
123	20 FT	TUBING, POLYETHYLENE BLACK, 1/4" OD, .063" WALL	
124	1	GROUND CLAMP, FOR 4" DIA. PIPE	Burndy, type GC-A

9513348.2576

ENGINEERING CHANGE NOTICE CONTINUATION SHEET Page 5 of 9 | 1. ECN 620758

WAS: SEE H-2-73343 SHT 1, REV 3

IS: SEE BELOW

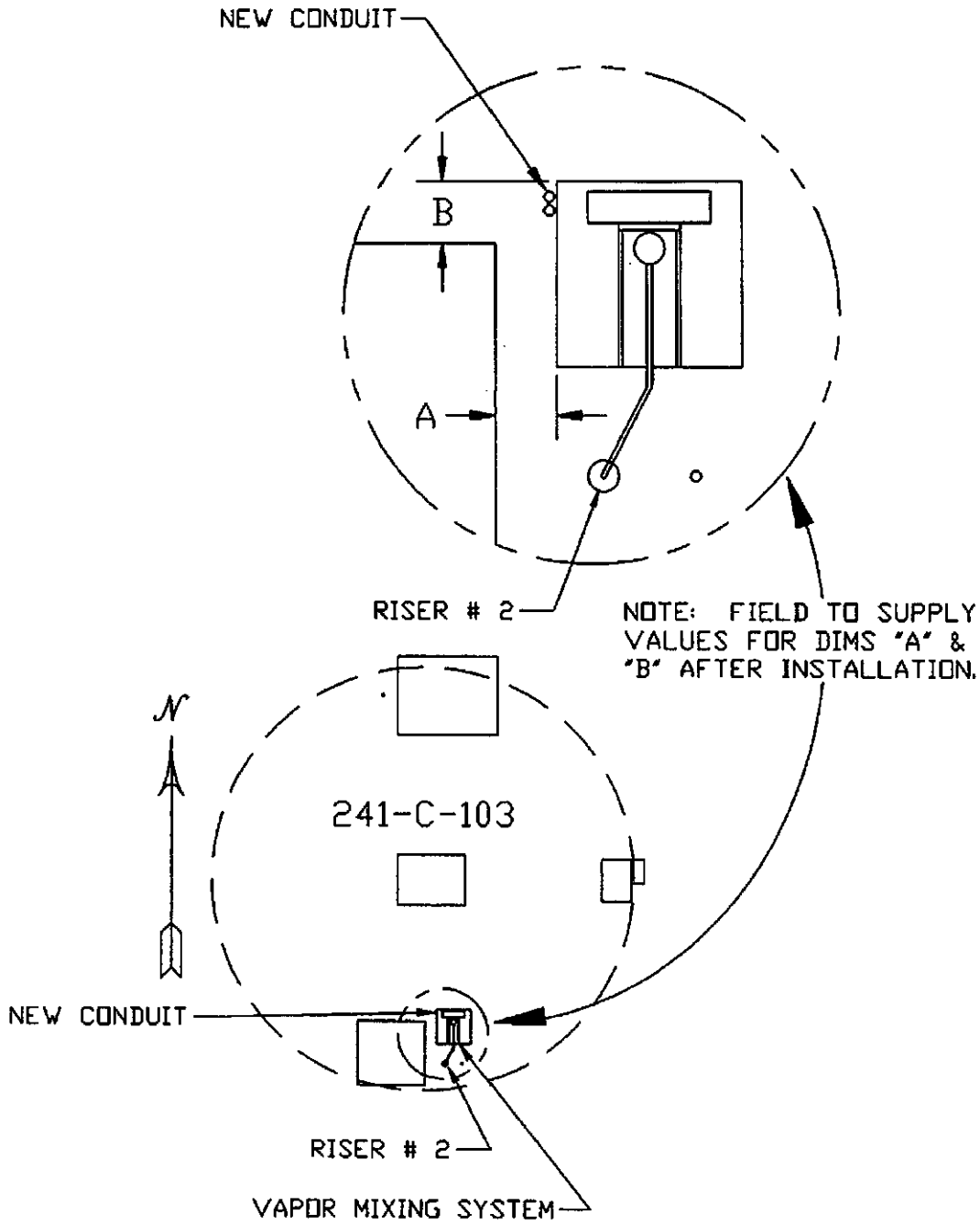

9513348.2577

ENGINEERING CHANGE NOTICE CONTINUATION SHEET	Page 6 of 9	1. ECN 620758

ADD TO H-2-90718 SHT 2

(CLOUDED AREAS CHANGED)

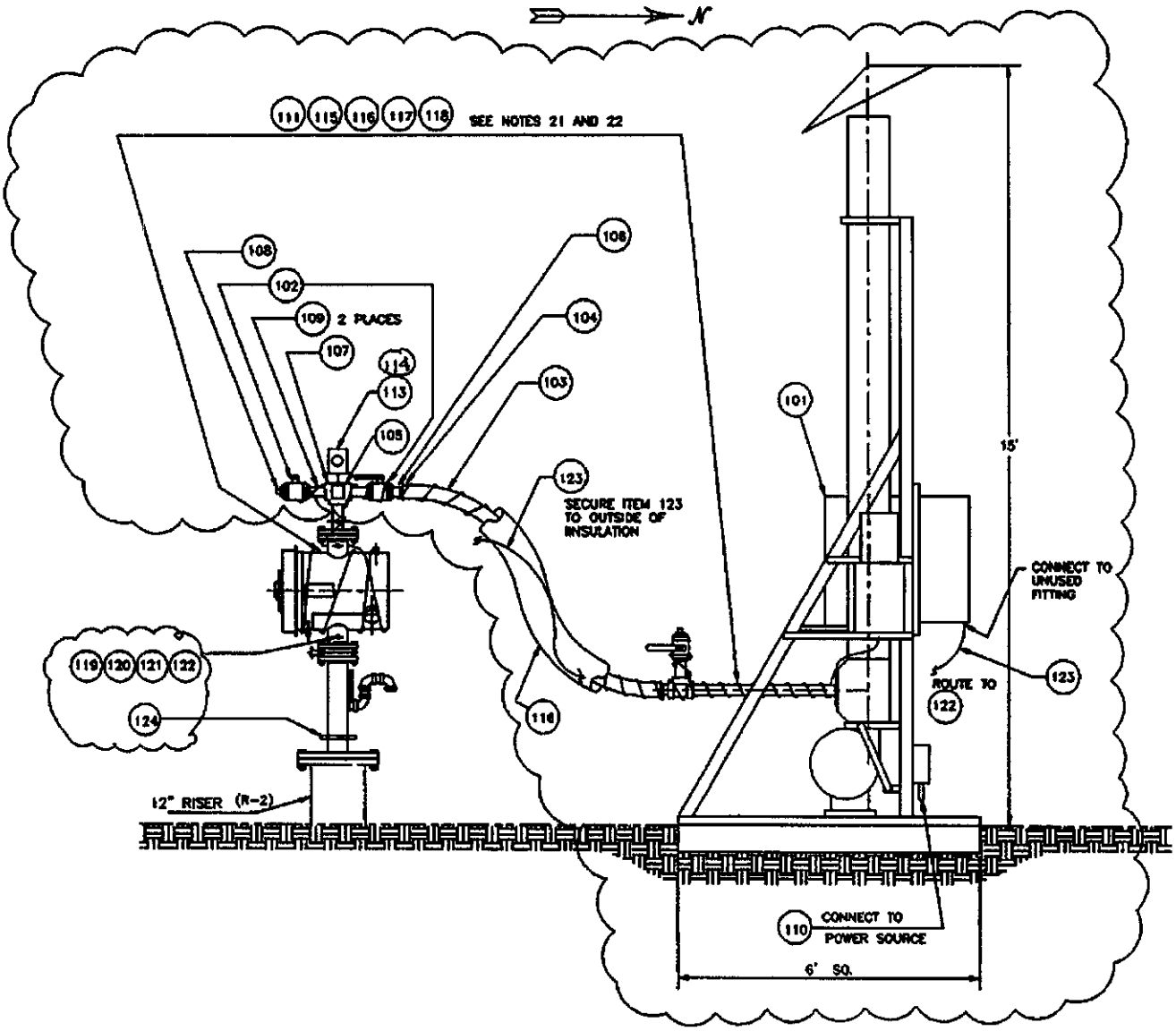

INSTALLATION

(NOT TO SCALE)

9513348.2578

ENGINEERING CHANGE NOTICE CONTINUATION SHEET

1. ECN 620758

WAS: SEE DWG. H-2-73957

ECN 620758

IS: SEE BELOW

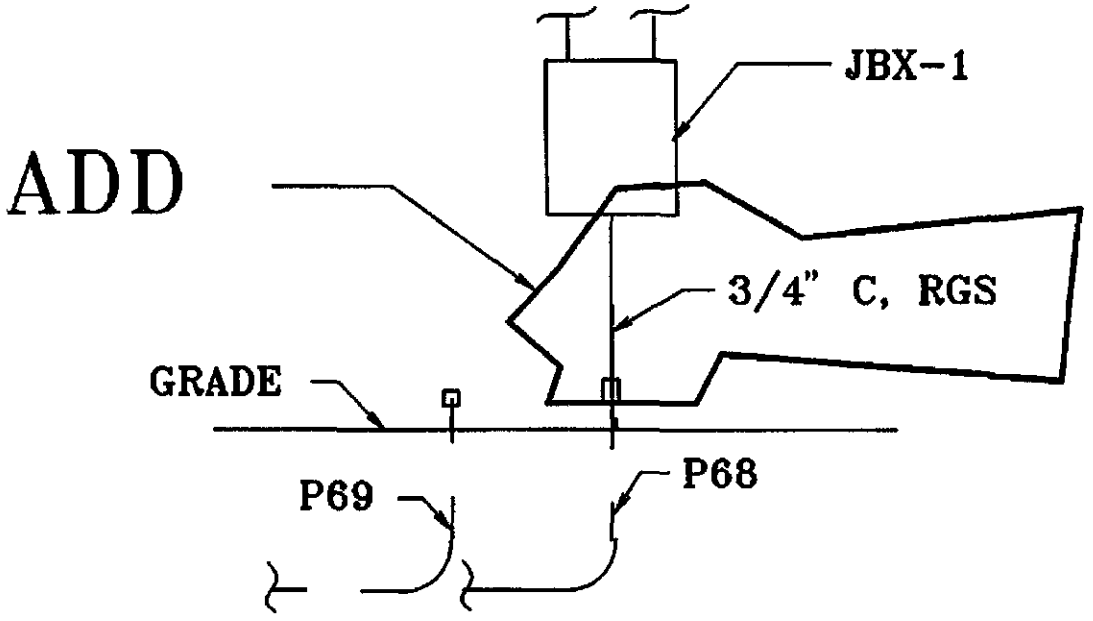

ELEVATION

(NTS)

9513348.2579

ENGINEERING CHANGE NOTICE CONTINUATION SHEET

Page 8 of 9

1. ECN 620758

WAS: SEE DWG H-2-73948, SH 1

ISS: SEE BELOW

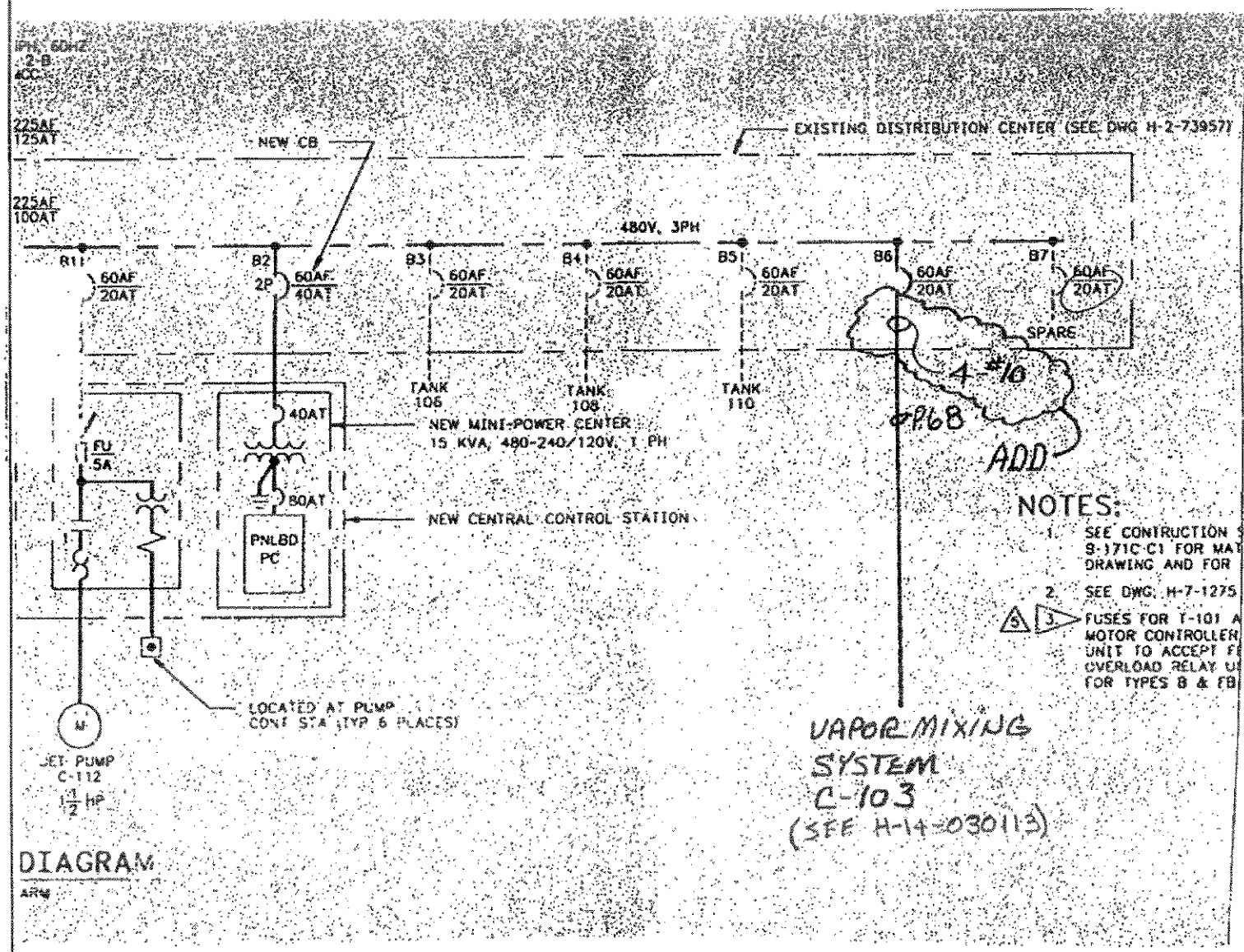

NOTES:

1. SEE CONTRUCTION S
9-171C-C1 FOR MAT
DRAWING AND FOR
2. SEE DWG. H-7-1275
3. FUSES FOR T-101 A
MOTOR CONTROLLER
UNIT TO ACCEPT F
OVERLOAD RELAY U
FOR TYPES B & FB

DIAGRAM

ARW

9513348.2580

ENGINEERING CHANGE NOTICE CONTINUATION SHEET Page 9 of 9 | 1. ECN 620758

NOTE TO DRAFTSMAN: Construction notes only. Do not incorporate the following notes into drawings. These notes are meant to be a guide for the more detailed work package instructions.

1. At riser 2 of 241-C-103 remove and dispose of the carbon adsorbers, connecting piping and breather filter insulation/heat trace if not already done.

2. Field locate concrete base (H-14-100291) near Riser 2 of tank 241-C-103 and the termination of the new electrical conduit (ref. ECN 615580) approximately as shown on page 5 of this ECN (dimensions A & B are approximately 2'). Provide field location data requested. Mount the Vapor Mixing System (H-14-100290-010) and orient it so that the pipe from the vent stack runs in the north-south direction and that the connection point for the vent gas flex-hose is south of the stack.

3. Extend conduit P 68 (P 69 is a spare) using rigid galvanized conduit or seal tight from its termination near grade level to connect to the junction box on the Vapor Mixing System at JBX-1. Pull wires [4 - #10 THHN, (3 phase wires black color coded per NEC. 1 ground wire green)] through conduit P 68. Connect wires to the existing circuit breaker #B6 in the Distribution Center (ECN 615580) and to the Vapor mixing system with wire nuts. Route ground wire so that it is not a tripping hazard, per H-14-100292. Ground the Vapor Mixing System to Riser 2 with an approved clamp (H-14-100292). Verify ground connection. Installation shall be per National Electrical Code.

4. Connect Vapor Mixing System to the outlet of the vent filter per page 6 of this ECN (remove existing elbow, re-use existing nipple).

5. Heat trace and insulate per notes 21 and 22.

6. Connect the photohelic in the mixing system control panel to existing pressure port upstream of breather filter per the following instructions (see page 6).

   A. Install 1/4" nipple/tee/plug/male connector assembly to the upstream pressure port on existing breather filter (located between filter and existing 4" butterfly valve).

   B. Route 1/4 " polyethylene tubing along flex duct back to the mixing system to capped 1/4" swaglock fitting on the bottom of control panel assembly.

Westinghouse
Hanford Company

P.O. Box 1970 Richland, WA 99352

June 30, 1995 9553592

Mr. R. E. Gerton, Director
Tank Safety Analysis Division
U.S. Department of Energy
Richland Operations Office
Richland, Washington 99352

Dear Mr. Gerton:

COMPLETION OF HANFORD FEDERAL FACILITY AGREEMENT AND CONSENT ORDER INTERIM MILESTONE M-40-07

This letter provides notification of completion of the Hanford Federal Facility Agreement and Consent Order Interim Milestone M-40-07, "Commence Operation of a Vapor Treatment System in Tank 241-C-103." Installation was completed on June 29, 1995. A copy of the results of the Acceptance Test Procedure is attached (Attachment 2) for transmittal to the Washington State Department of Ecology and the U. S. Environmental Protection Agency to fulfill the milestone requirements.

As agreed in our meeting of June 15, 1995, Westinghouse Hanford Company will continue field testing of the equipment for several months. Testing during this period will establish the system's ability to maintain the noxious and potentially hazardous vapors, that have periodically emanated from the tank, within acceptable worker exposure limits at all times. Operating restrictions will continue in C-farm until the results of the testing are evaluated.

Also attached for your convenience is a draft notification letter to the U.S. Environmental Protection Agency and the State of Washington Department of Ecology (Attachment 1).

Please address any questions to Mr. J. G. Propson on 372-0455.

Very truly yours,

E. J. Lipke, Manager
Safety Engineering
Tank Waste Remediation System

Attachments

RL - S. O. Branch
M. F. Jarvis
K. M. Thompson
J. E. Rasmussen
A. H. Wirkkala (w/o attachments)

CORRESPONDENCE DISTRIBUTION COVERSHEET

Author	Addressee	Correspondence No.
J. G. Propson, 372-0455	R. E. Gerton, RL	9553592

Subject:

INTERNAL DISTRIBUTION

Approval	Date	Name	Location	w/att
		Correspondence Control	A3-01	X
X L.D. Arnold	Per Telecon with M.A. McLaughlin. JGP 6-30-95	L. D. Arnold	B2-35	X
		R. F. Bacon	S7-85	X
		L. E. Borneman	R2-06	X
		D. R. Bratzel	S7-21	X
		R. B. Conrad	H5-09	X
		W. T. Dixon	H6-21	X
		G. T. Dukelow	S7-15	X
		J. L. Lee	R2-50	X
		E. J. Lipke	S7-14	X
		J. J. Luke	H6-25	X
		M. A. McLaughlin	B2-35	X
		T. L. Moore	H5-09	X
		S. R. Moreno	B3-06	X
X John D. Propson	6-30-95	J. G. Propson	S2-02	X
		B. D. Williamson	B3-15	X
		A. M. Umek	S7-81	X
		EPIC	H6-08	X
		JGP file/LB	S2-02	X

JUL 11 1995

A-6001-538 (01/95) WEF008

Attachment 1 to 9553592

Draft Transmittal Letter
to
U.S. Environmental Protection Agency
and
State of Washington Department of Ecology

Consisting of 1 page

Mr. Douglas R. Sherwood
Hanford Project Manager
U.S. Environmental Protection Agency
712 Swift Boulevard, Suite 5
Richland, Washington 99352

Mr. Roger Stanley
Tri-Party Agreement Implementation
State of Washington
Department of Ecology
P. O. Box 47600
Olympia, Washington 98504-7600

Dear Messrs. Sherwood and Stanley:

COMPLETION OF HANFORD FEDERAL FACILITY AGREEMENT AND CONSENT ORDER INTERIM MILESTONE M-40-07: COMMENCE OPERATION OF A VAPOR TREATMENT SYSTEM IN TANK 241-C-103

This letter provides notification of the completion of Hanford Federal Facility Agreement and Consent Order Interim Milestone M-40-07, "Commence Operation of a Vapor Treatment System in Tank 241-C-103." The treatment system was installed on June 29, 1995. Operability has been demonstrated by the completion of the acceptance test procedure, a copy of the test results is enclosed for your information.

Additional testing will be completed during the next several months. Testing during this period will establish the system's ability to maintain the noxious and potentially hazardous vapors, that have periodically emanated from the tank, within acceptable worker exposure limits at all times. Operating restrictions will continue in C Farm until the results of the testing are evaluated.

If you have any questions, please contact Mary F. Jarvis, PhD at (509)376-4550.

Sincerely,

K. M. Thompson
Hanford Project Manager

cc: R. King, Ecology
A. Stone, Ecology
K. Oates, EPA
L. Arnold, WHC
E. Lipke, WHC
R. Jim, YIN
D. Pawaukee, Nez Perce
J. Wilkenson, CTUIR

Attachment 2 to 9553592

Acceptance Test Procedure Results for Vapor Treatment System for Tank 241-C-103

Consisting of 5 pages

1. Document Number 2E-95-00237/M *MODIFICATION*
   Work Item Title VAPOR TREATMENT SYSTEM FOR C-103

9.0 POST-MAINTENANCE TESTING:

9.1 NOTIFY Engineering, Bruce Conrad and/or Drew Wilder for direction during performance of this section.

9.2 ENSURE breaker number B-6 at the existing power distribution center is ON.

9.3 PLACE THE 30 AMP MAIN BREAKER AT VMS MINI POWER ZONE PNLBD A IN THE ON POSITION.

9.4 PLACE THE VMS MOTOR DISCONNECT SWITCH IN THE BLOWER MOTOR CONTROLLER IN THE CLOSED POSITION.

9.5 START blower motor and VERIFY correct rotation.

Rotation correct _____
Initial

9.5.1 IF rotation is incorrect, OPEN disconnect switch at the blower motor controller VTP-DS-1303 PLACE A PLD, AND

PERFORM zero energy check, THEN

REVERSE any two motor leads on the load side of the starter, THEN

CLOSE VTP-DS-1303 and REPEAT step 9.5

9.6 MEASURE and RECORD voltage level between phases at motor starter. Voltage should be 460 +/-5% and unbalance between measurements should not be more than 2%.

L1-L2 478 V, L2-L3 480 V, L1-L3 478 V

9.7 MEASURE and RECORD motor ampere at motor starter. Measurements should not exceed motor nameplate ampere rating and unbalance between measurements should not be greater than 10%.

L1 2.5 amps L2 2.5 amps L3 2.5 amps

1. Document Number 2E-95-00237/M *MODIFICATION*
   Work Item Title VAPOR TREATMENT SYSTEM FOR C-103

9.8 ENSURE heat trace pilot light is on.

pilot light on aw
Initial

9.9 IF the required conditions were not met in Steps 9.6 through 9.8 Engineering will determine resolution and NOTIFY Planning for work package support.

FLOW DATA

9.10 IF required, adjust flow rate to within specification per Engineering direction, THEN

RECORD flow rate from tank from gage labeled VTP-FI-1313. Flow rate shall be 20 cfm +/- 10 cfm.

20.7 cfm

9.11 RECORD main stack flow velocity from gage labeled VTP-FIS-1333. Stack velocity shall be greater than 2500 fpm.

3400 fpm

9.12 RECORD draw tube temperature from gage labeled VTP-TIC-1323 (informational).

106 Degrees F

9.13 RECORD draw tube pressure from gage labeled VTP-PI-1303. Pressure shall be between -1 and 0 inches wc.

.303 aw
~~.2575~~ inches wc.

1. Document Number 2E-95-00237/M *MODIFICATION*
   Work Item Title VAPOR TREATMENT SYSTEM FOR C-103

==========

WARNING LIGHTS

NOTE:
The flashing yellow warning light is designed to come on if HEPA filter has a high delta pressure or if the main stack flow is low. A steady white light indicates normal operation.

9.14 SIMULATE high delta pressure across HEPA filter by slowly closing the 2 inch diameter valve located above the breather filter (#VTP-V-1301). RECORD gage reading (labeled VTP-PDIS-1343) below when flashing yellow light first comes on (shall be .75 +/- .1 inch wc). WCN - 02

Flashing yellow on at .7 inches wc. SHUT valve # VTP-V-1301 completely and Record diff tube vacuum reading as indicated on VTP-PI-1303 on the VHMS control panel & VTP-PI-1303 reading .9

9.15 RETURN valve # VTP-V-1301, located on top of breather filter and connected to flex hose, back to its normal open position. VERIFY flashing yellow light is OFF and white light is ON.

Flashing yellow light is OFF yes (yes\no)

Steady white light is ON yes (yes\no)

9.16 REQUEST OPERATIONS PLACE VALVE #VTP-V-1301 in open position.

9.17 REQUEST OPERATIONS PLACE VALVE #VTP-V-1302 in the closed position.

9.18 SIMULATE low main stack flow by slowly closing the slide gate damper at inlet of blower. RECORD gage reading (labeled VTP-FIS-1333) below when flashing yellow first comes on (shall be 2500 fpm +/- 50 fpm)

Flashing yellow on at 2500 fpm

1. Document Number 2E-95-00237/M *MODIFICATION*
   Work Item Title VAPOR TREATMENT SYSTEM FOR C-103

9.19 IF the required conditions were not met in Steps 9.10 through 9.18 Engineering will determine resolution and NOTIFY Planning for work package support.

9.20 REMOVE slide gate damper from blower and give to engineering.

9.21 RECORD reading from the Magnehelic gages at C-101, C-102, and C-103.

WCN-02 ~~C-101~~ _____ ~~aw~~ C-102 .01 C-103 .025 aw WCN-02

~~9.22 COLLECT one ammonia drager tube (< 25 ppm) and one total organic carbon sorbent tube from the sample port below control panel and record information below. The ammonia concentration in the stack shall be less than 25 ppm. The TOC sorbent tube shall be sent to PNL for analysis.~~

~~SAMPLE TYPE, TIME, DRAWTUBE FLOW: STACK VEL,RESULTS~~
~~AMMONIA~~
~~DRAGER ___ _____ _____CFM _____CFM _____~~

~~TOC~~
~~SORBENT___ _____ _____CFM _____CFM _____~~

~~ADDITIONAL: _____~~

9.23 ENSURE that any exceptions to ATP testing are recorded on the J-5, AND

FORWARD a copy of work package J-4A and a copy of the J-5 to Bruce Conrad upon completion.

Test Complete and Satisfactory:

MD _____ 6/29/95
PIC Date

AE Wilder _____ 6/29/95
Test Engineer Date

J-7 #2E-95-237 /1M WCN-C2 page 2 of 2

9.22 COLLECT three ammonia drager tubes (acceptance criteria is < 25 ppm) and three SUMMA canister samples from the sample port below control panel, and one SUMMA from ambient (within 2 feet of blower inlet). Record information below. The ammonia concentration in the stack shall be less than 25 ppm. The SUMMA's shall be sent to PNL for analysis and results will be documented as part of the OTP.

Sample Type	Time/ date	Drawtube flow (cfm)	Stack velocity (fpm)	Results	Sample ID number and/or Comments
Ammonia Drager #1	6/29/95 1457	20.7	3400	5 ppm	3 ppm TOC
Ammonia Drager #2	6/29/95 1457	20.7	3400	5 ppm	none
Ammonia Drager #3	1457 6/29/95	20.5	3400	5 ppm	None
SUMMA #1	1503 6/29/95	20.5	3400	N/A	S5043-A02.271
SUMMA #2	1510 6/29/95	20.5	3400	N/A	S5043-A03.272
SUMMA #3	1512 6/29/95	20.5	3400	N/A	S5043-A04.273
SUMMA (AMBIENT)	1503 6/29/95	20.5	3400	N/A	S5043-A01.270

Readings taken by HQ Junt 6/29/95

RMIS Viewprint Document Cover Sheet

This document was retrieved from the Records Management Information System (RMIS). It is intended for information only and may not be the most recent or updated version.

Accession #: **D198168645**

Document #: **Not Available**

Title/Desc:
CHANGE TO ECN-620758 & DWG FOR TANK VAPOR MIXING SYS TO MOD PARTS LIST FOR SYS INSTALLATION TO SHOW ACTUAL PROCURED ITEMS

Pages: 7

CPF 13
IPF 7,20

FILE COPY
ESSENTIAL

ENGINEERING CHANGE NOTICE

Page 1 of 8

1. ECN No 620763

Proj. ECN

2. ECN Category (mark one)	3. Originator's Name, Organization, MSIN, and Telephone No.	3a. USQ Required?	4. Date
Supplemental [] Direct Revision [] Change ECN [x] Temporary [] Standby [] Supersedure [] Cancel/Void []	GA Barnes; Charact. Equipment (75220); H5-09; 376-2241	[X] Yes [] No	June 9, 1995
	5. Project Title/No./Work Order No.	6. Bldg./Sys./Fac. No.	7. Approval Designator
	Tank Vapor Mixing System	241-C-103	Q
	8. Document Numbers Changed by this ECN (includes sheet no. and rev.)	9. Related ECN No(s).	10. Related PO No.
	H-2-90718, sht 1, Rev 7 SHT 2, REV 2	620758	N/A

11a. Modification Work	11b. Work Package No.	11c. Modification Work Complete	11d. Restored to Original Condition (Temp. or Standby ECN only)
[X] Yes (fill out Blk. 11b) [] No (NA Blks. 11b, 11c, 11d)	2E-95-00237	SEP 04 1998 J E Wells 9/4/98 Cog. Engineer Signature & Date	NA Cog. Engineer Signature & Date

12. Description of Change

ETN-94-0167

SEE CHANGES ON PAGE 3.

CECN-620759

13a. Justification (mark one)

Criteria Change	[]	Design Improvement	[X]	Environmental	[]	Facility Deactivation	[]
As-Found	[]	Facility Const.	[]	Const. Error/Omission	[]	Design Error/Omission	[]

13b. Justification Details

This ECN modifies the parts list for the C-103 Vapor Mixing System installation to show actual procured items. These changes have gone through design verification per WHC-CM-6-1, EP 4.1 (informal review).

Sh. 1,3,4,6,15,16, 5,20

14. Distribution (include name, MSIN, and no. of copies)

G. A. Barnes	H5-09 (1)	S. R. Pierce	S5-05 (1)
D. C. Board	S1-57 (1)	G. M. Hanson	S5-01 (1)
A. E. Wilder	R1-51 (1)	D. E. Bowers	S6-01 (1)
R. B. Conrad	H5-09 (1)	M. D. Vanderzanden	S2-24 (1)

RELEASE STAMP

OFFICIAL RELEASE BY WHC (16)
DATE JUN 26 1995
WS #16

A-7900-013-1

ENGINEERING CHANGE NOTICE	Page 2 of 87	1. ECN (use no. from pg. 1) 620763

15. Design Verification Required	16. Cost Impact				17. Schedule Impact (days)	
	ENGINEERING		CONSTRUCTION			
[X] Yes	Additional	[] $	Additional	[] $	Improvement	[]
[] No	Savings	[] $ N/A	Savings	[] $ N/A	Delay	[] N/A

18. Change Impact Review: Indicate the related documents (other than the engineering documents identified on side 1) that will be affected by the change described in Block 12. Enter the affected document number in Block 19.

SDD/DD	[]	Seismic/Stress Analysis	[]	Tank Calibration Manual	[]
Functional Design Criteria	[]	Stress/Design Report	[]	Health Physics Procedure	[]
Operating Specification	[]	Interface Control Drawing	[]	Spares Multiple Unit Listing	[]
Criticality Specification	[]	Calibration Procedure	[]	Test Procedures/Specification	[]
Conceptual Design Report	[]	Installation Procedure	[]	Component Index	[]
Equipment Spec.	[]	Maintenance Procedure	[]	ASME Coded Item	[]
Const. Spec.	[]	Engineering Procedure	[]	Human Factor Consideration	[]
Procurement Spec.	[]	Operating Instruction	[]	Computer Software	[]
Vendor Information	[]	Operating Procedure	[]	Electric Circuit Schedule	[]
OM Manual	[]	Operational Safety Requirement	[]	ICRS Procedure	[]
FSAR/SAR	[]	IEFD Drawing	[]	Process Control Manual/Plan	[]
Safety Equipment List	[]	Cell Arrangement Drawing	[]	Process Flow Chart	[]
Radiation Work Permit	[]	Essential Material Specification	[]	Purchase Requisition	[]
Environmental Impact Statement	[]	Fac. Proc. Samp. Schedule	[]	Tickler File	[]
Environmental Report	[]	Inspection Plan	[]	N/A	[X]
Environmental Permit	[]	Inventory Adjustment Request	[]		[]

19. Other Affected Documents: (NOTE: Documents listed below will not be revised by this ECN.) Signatures below indicate that the signing organization has been notified of other affected documents listed below.

Document Number/Revision	Document Number/Revision	Document Number Revision
N/A		

20. Approvals

	Signature	Date		Signature	Date
OPERATIONS AND ENGINEERING	DE Willson	6/26/95	ARCHITECT-ENGINEER		
Cog. Eng. SR Pierce	[signature]	6/26/95	PE		
Cog. Mgr. DE Willson	[signature]	6/26/95	QA		
QA DC Board	JGB Per TELECON	6-21-95	Safety		
Safety			Design		
Environ.			Environ.		
Originator GA Barnes,	[signature]	6-23-95	Other		
X Informal Reviewer,	[signature]	6-26-95	DEPARTMENT OF ENERGY		
R.E. MERRIMAN	JGB Per TELECON	6-23-95	Signature or a Control Number that tracks the Approval Signature		

ENGINEERING CHANGE NOTICE CONTINUATION SHEET	Page 3 of 57	1. ECN 620758

Item 1: Update the PARTS/MATERIAL LIST on H-2-90718, sht 1 (ECN 620758, page 4) as follows (shaded areas changed):

PARTS / MATERIAL LIST (add to H-2-90718 sht1)			
PART #	QTY -150	DESCRIPTION	MATERIAL/REF
102	2	VALVE, BALL, 2" NPT, FULL PORT, SST	(APOLLO, #86-108-01A)
103	AR 4	FLEX HOSE, 2" ~~SPIRALITE (20" LG.)~~	KANAFLEX, 300 EPDM ~~PAC-FIC ECKO, 2000 EPDM~~
104	2 4	CLAMP, HOSE, WORMDRIVE, FIELD TO DETERMINE SIZE ~~2"~~	WHC STORES ~~0033-1270-290~~
~~105~~	~~2~~	~~CLAMP, HOSE, WORMDRIVE, 3"~~	~~WHC STORES~~
106	~~1~~ 2	KING NIPPLE, 2"	300 SERIES SST
107	1	TEE, 2" PIPE NPT	~~ASTM A182, 304L~~ 300 SERIES SST
108	1	PLUG, 2" PIPE NPT	~~ASTM A182, 304L~~ 300 SERIES SST
109	AR	NIPPLE, PIPE NPT, 2", CLOSE	~~ASTM A312, GRADE TP 304L~~ 300 SERIES SST
111	100 FT	HEAT TRACE, SELF REGULATING	RAYCHEM CHEMELEX, 5BTV1-CT
115	AR	INSULATION, SHEET, 1" THICK (2 LAYERS) OR 2" THICK (1 LAYER)	ARMSTRONG, ARMAFLEX ~~AP II~~
116	~~AR 20 FT~~	INSULATION, FOR 2" PIPE, 1" THICK	ARMSTRONG, ARMAFLEX ~~AP II~~
119	1	NIPPLE, 1/4" X 1" LONG, ~~CLOSE PIPE~~ NPT	~~ASTM A182, 304L SST~~ 300 SERIES SST
120	1	TEE, 1/4", PIPE NPT	~~ASTM A182, 304L~~ 300 SERIES SST
121	1	PLUG, 1/4", PIPE NPT	~~ASTM A182, 304L~~ 300 SERIES SST
124	1	GROUND CLAMP, FOR 4" DIA. PIPE	~~ILSCO Burndy, type GC-A~~

ENGINEERING CHANGE NOTICE CONTINUATION SHEET	Page 4 of ~~5~~ 7	1. ECN 620758 63

Item 2: Replace NOTE 21 and 22 on sheet 1 of H-2-90718 (ref. page 3 of ECN 620758) with the following:

21. Apply heat trace from the inlet to PN 32 of the Vapor Mixing System (H-14-100290) to Riser 2 at grade level as shown.

    A. Use self-regulating heating cable rated at 5 Watts/foot.

    B. Spiral wrap the 2" piping/flex duct with 2.4' to 3' of heating cable per foot of pipe (2-3/4" to 3-3/4" pitch).

    C. Use 18' to 24' of heating cable around the G1 Filter Housing (4 to 5 wraps). Wrap the remaining heating cable around Riser 2 down to grade level and the 4" pipe (Item No 8), as shown.

    D. Use a power connection kit to connect power to the heat trace at the Vapor Mixing System. Use a connection kit with pilot light to terminate the heat trace circuit and indicate "energized".

    E. Mount pilot light in an easy to see location.

22. After installation of the heat trace, insulate per the following instructions.

    A. Insulate the exterior of the G1 Filter Housing, riser 2 and the 4" pipe (Item No 8) with Armaflex II sheet insulation, 2" thick.

    B. Insulate the piping/flex duct/valves from the G1 Filter Housing to the inlet to PN 32 of the Vapor Mixing System (H-14-100290) with Armaflex II sheet or pipe insulation, 1" thick.

    C. Secure all insulation joints with Armstrong 520 adhesive. Apply in accordance to manufacturer's recommendations.

    D. Use aluminum bands as needed to hold the insulation in place.

    E. Finish the weather exposed surface of all insulation with Armstrong standard white Armaflex Finish. Apply in accordance to manufacturer's recommendations.

    F. The insulation shall not interfere with the removal of access doors (G1 Filter Housing), or the operation of valves, or DOP and sample ports, or the maintenance of electrical equipment, or the visibility of the heat trace pilot light.

ENGINEERING CHANGE NOTICE CONTINUATION SHEET	Page 5 of ~~57~~	1. ECN 620~~758~~ 63

Item 3: Update the the following istallation on page 6 of ECN 620758:
(CLOUDED AREAS CHANGED)

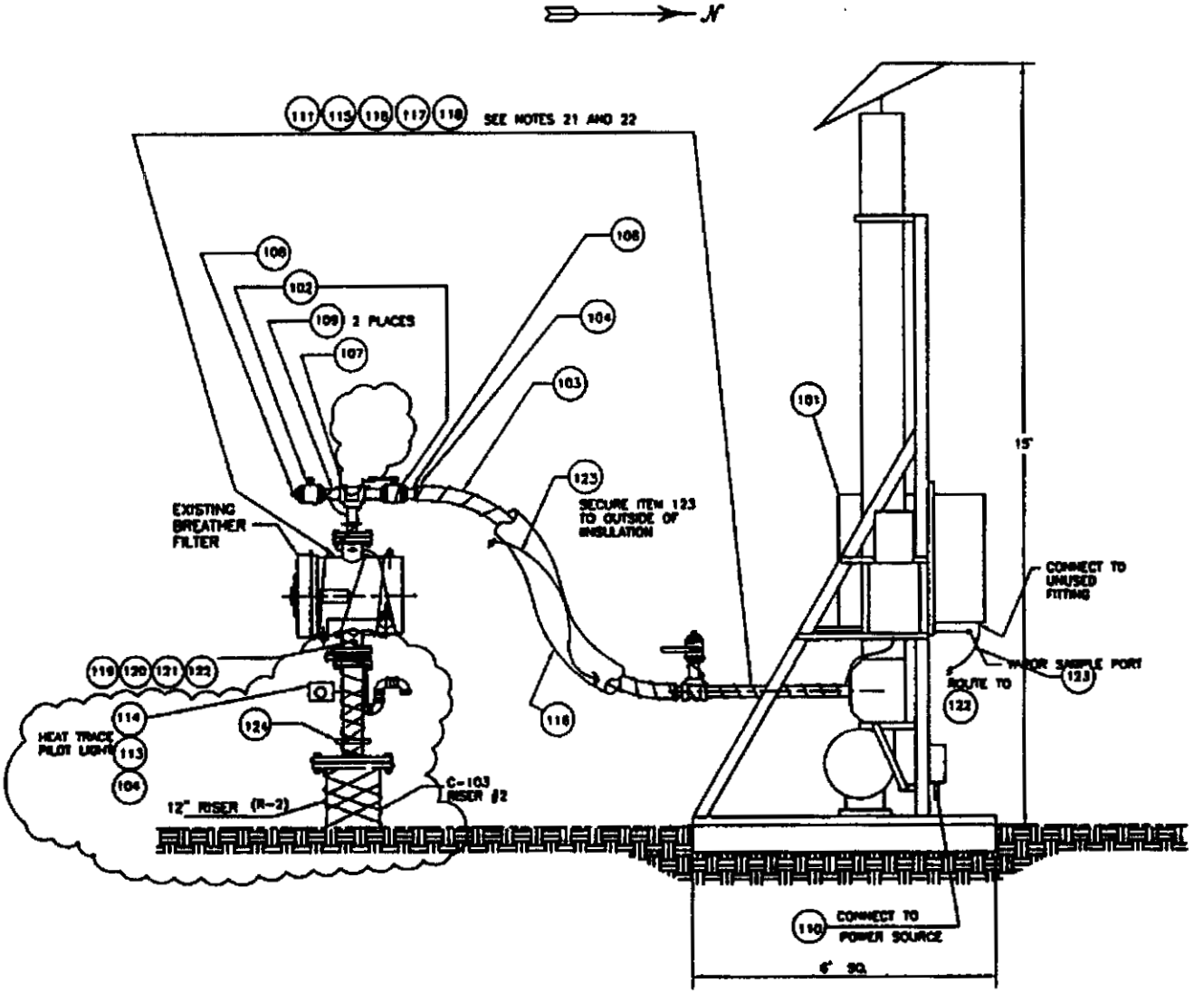

INSTALLATION
(NOT TO SCALE)

ECN-620763 sht 6 of 7

UNREVIEWED SAFETY QUESTION SAFETY REVIEW FORM
(Per WHC-IP-0842, 15.9)

REFERENCE DOCUMENT(S):

ECN No. 620763 PCA No.

Work Pkg No. Other (Specify)

TITLE: UPDATE OF PARTS/MATERIAL LIST AND ADDITION OF HEAT TRACE AND INSULATION ON DRAWING H-2-90718

A. Does the PROPOSED CHANGE represent a change to the facility as described in the AUTHORIZATION BASIS documentation?

[] N/A [X] No [] Yes/Maybe

Basis: The authorization basis for work in the tank farms is chapter six of WHC-SD-WM-ISB-001 (ISB-001) and its references. ISB-001 references WHC-SD-WM-SARR-001 (SARR-001) as the authorization basis for work in and around tanks 241-C-101, -102, and -103. These three tanks share a common ventilation system, which is being updated by a vapor treatment (mixing) system (VTS) to be installed on C-103. Parts/materials are listed on drawing H-2-90718, sheet 1, for the VTS. The new substitute parts/materials and the addition of heat trace and insulation listed on ECN 620762 will provide equivalent general safety functions for proper operation of the VTS, as permitted by safety criteria in SARR-001 and as described in USQ Safety Evaluation TF-95-0022. Therefore, the substitution of these parts/materials does not represent a change.

B. Does the PROPOSED CHANGE represent a change to procedures as described in the AUTHORIZATION BASIS?

[] N/A [X] No [] Yes/Maybe

Basis: Basic installation and operating procedures will not change as a result of using the substitute parts/materials for the VTS, as the parts/materials perform equivalent functions.

C. Does the test or experiment represent a test or experiment not described in the AUTHORIZATION BASIS documentation?

[] N/A [X] No [] Yes/Maybe

Basis: The authorization basis, WHC-SD-WM-SARR-001, permits ventilation of 241-C-101, -102, and -103 through any of the three tanks with the others closed off. The substitution of parts/materials as listed in ECN 620762 will not change the ventilation performance from that expected with the original parts/materials, thus it does not represent a new test or experiment.

ECN-620763 Sht 7 of 7

UNREVIEWED SAFETY QUESTION SAFETY REVIEW FORM
(Continued)

D. Does the change, test or experiment impact:

- Implemented OSRs or IOSRs? [] N/A [X] No [] Yes/Maybe
- Approved IOSR Compliance Implementation Plans? [X] N/A [] No [] Yes/Maybe

Basis: The IOSR covering single-shell waste tanks is WHC-SD-WM-OSR-005. There are no operating safety requirements for toxic gases emanating from single-shell waste tanks in this OSR. Controls for worker protection from toxic gases are contained in the tank farm Health and Safety Plan WHC-SD-WM-HSP-002.

Based on the above, a Safety Evaluation [] DOES [X] DOES NOT need to be performed for this change

USQE No. 1 W. G. Farley (Print Name)

Wayne G. Farley (Signature) 6/26/95 (Date)

USQE No. 2 R. L. Guthrie (Print Name)

Richard L. Guthrie (Signature) 6/26/95 (Date)

A-6001-202 (03/95) GEF288

FROM : FLANDERS FILTERS FPD SALES TO : 3730171 1996.03-29 10:01 #983 P.01/01

Flanders®

FLANDERS FILTERS INC.
531 Flanders Filters Road
Washington, NC 27889

Telephone: (919) 946-8081
FAX: (919) 946-3425

DATE: 03/28/96
TO: GARY TARDIFF
COMPANY: WHC
FAX NUMBER : 509/373-0171
FROM: MATT O'NEAL
NUMBER OF PAGES: (Including This Page): 1

RE: CARBON ADSORPTION

OUR CARBON VENDOR HAS ESTIMATED THAT THE LIFE OF A 24"x24"x16" CARBON ADSORBER OPERATING AT 1,000 CFM AND CHALLENGED WITH THE CONCENTRATIONS OF NPH ONLY PER YOUR LIST WILL LAST APPROX. 1500 HRS.

I HOPE THIS WILL BE HELPFUL TO YOU AND PLEASE CALL IF YOU NEED ANYTHING ELSE.

REGARDS,

Matt

Harty, W M Jr (Mike)

From: Tardiff, Gary R
Sent: Tuesday, March 30, 1999 7:55 AM
To: Bryan, Wesley E (Wes); Harty, W M Jr (Mike)
Cc: Baide, Daniel G (Dan); Dodd, Ryan A
Subject: RE: 702-AZ HEGA Efficiency

Wes,

The overall efficiency of the HEGA will depend on many factors (sort of a Black Art) like organics involves, flow rate (residence time) temperature, mositure content, whether we run ALC or not, waste transfers, new wastes entering the system (106-C) ..etc! Based on earlier calc.the HEGA may only last 3-6 months depending on incoming concentrations. As we discussed before, to really understand this beast, we need a rigurous sampling program to find out what the overall organic removal rates are during normal operation, during waste transfers and during ALC operation. The literature indicates that the HEGA removes ~ 90% of the incoming stream noramily (again it depends on the organic involved and how new the filter is).

I don't believe we can afford a rigorous sampling program so the fall back position is to change out more frequently. Also since the HEGA pick up moisture 100-200 pounds we should change out yearly so they are not too heavy to lift. Maybe we should perform the aerosol testing every 6 months?

If we get a year out of one HEGA I think that is Great! So I would recommned leaving the Efficiency at 99.5% so that we err on the conservative side! However, with a sampling program we may find out we really don't need a HEGA filter at all.

Gary Tardiff, AWF Cog Eng, DST Engineering

—Original Message—
From: Bryan, Wesley E (Wes)
Sent: Sunday, March 28, 1999 9:44 AM
To: Harty, W M Jr (Mike)
Cc: Tardiff, Gary R; Baide, Daniel G (Dan); Dodd, Ryan A; Bryan, Wesley E (Wes)
Subject: 702-AZ HEGA Efficiency

Mike,

At the WRSS pre-job this morning Ryan told me about the 702-AZ HEGA failing its efficiency test last week. It apparently met a 99% efficiency, but not the required 99.5%. The question came up as to where the 99.5% requirement came from and is it artificially restrictive?. Since the system historically exhibits minimal VOC readings, could a lesser HEGA efficiency still keep us within the 50 ppm VOC limit stipulated in the NOC? Is the efficiency requirement written into the NOC or what? Will you please do some research as to the source of the 99.5% requirement and give some thought as to the acceptability of a lesser efficiency requirement?

Thanks,

Wes

 11:30 AM

OA-ENG-301

FAX

FAX COVER SHEET

Date: March 4, 1996

Page 1 of 3 Pages (Coversheet included)

Fax Number To: 919-946-3425	**Fax Number From:** (509) 373-0171
Name: Matt O'Neal	**Name:** Gary R Tardiff
Phone Number/Location: 919-946-8081	**Phone Number/Location:** 509-373-5539 / 274-AW / 200 East
Organization: Flanders	**Organization:** Westinghouse Hanford Richland Wa

Message

Matt, Attached are Organic Concentrations and I-131. Please Let me know how long a 16" x 24" x 24" (1000 cfm) U-Bed Carbon Adsorber will last. Is it possible I can get an answer by the end of this week. Thanks

Gary R Tardiff

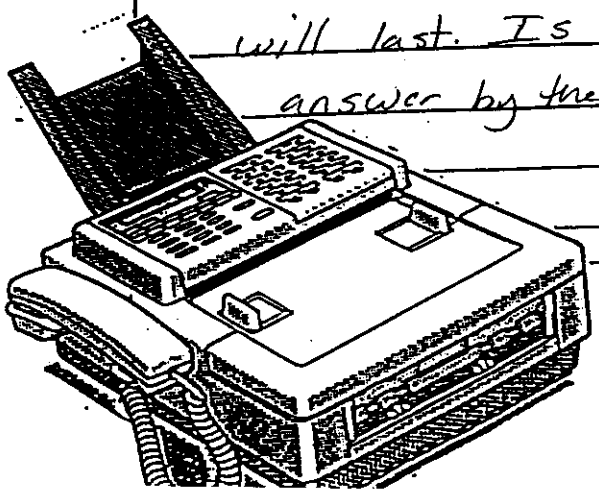

TABLE B

GASEOUS RADIONUCLIDE CONCENTRATIONS UPSTREAM OF AIR CLEAN-UP TRAIN

Radionuclide	Concentrations ($\mu Ci/ft^3$)
Ru-106/Rh-106	6.9E-08
Sn-113	1.3E-07
Sb-125	6.2E-07
I-129	3.9E-05

All concentrations referenced to dry air at 70°F, 14.7 psia.

TABLE C

ORGANIC CONCENTRATIONS UPSTREAM OF AIR CLEAN-UP TRAIN

System Temperature	50°F
System Pressure	13.7 psia
Relative Humidity	68%
Abs Hum	0.005 lb H_2O/lb dry air
Vapor Pressure	0.36 inHg
Specific Volume	13.9 ft^3/lb dry air

ORGANIC CONTAMINANTS	CONCENTRATIONS lb/min	lb/ft^3 (dry)
1-butanol	1.62E-06	4.06E-09
methylene chloride	1.92E-09	4.80E-12
acetone	1.16E-06	2.90E-09
carbon disulfide	1.40E-10	3.50E-13
1,2-dichloroethane	4.45E-11	1.11E-13
trichlorofluoromethane	4.64E-09	1.16E-11
bromomethane	5.16E-11	1.29E-13
1,1,1-trichloroethane	2.40E-10	6.00E-13
carbon tetrachloride	1.03E-11	2.57E-14
1,2-dichloropropane	1.72E-11	4.30E-14
benzene	1.36E-09	3.40E-12
dibromochloromethane	3.43E-12	8.57E-15
1,1,2-trichloroethane	9.61E-11	2.40E-13
vinyl acetate	9.57E-10	2.39E-12
2-butanone (MEK)	1.90E-07	4.74E-10
trichloroethylene	3.09E-11	7.73E-14
bromoform	1.92E-10	4.80E-13
2-hexanone (MBK)	5.09E-08	1.27E-10
tetrachloroethylene	2.85E-10	7.13E-13
toluene	2.43E-09	6.07E-12
chlorobenzene	2.05E-11	5.13E-14
4-methyl-2-pentanone (MIBK)	1.77E-08	4.43E-11
ethyl benzene	3.43E-12	8.57E-15
1,1,2,2-tetrachloroethane	4.77E-10	1.19E-12
o-xylene	7.43E-08	1.86E-10
NPH (kerosene-type diluent)	4.35E-05	1.09E-07
TBP (tributyl phosphate)	7.14E-08	1.78E-10
EDTA	1.22E-07	3.05E-10
HEDTA	2.32E-06	5.80E-09
Ammonia	4.08E-04	1.02E-06

FROM : FLANDERS FILTERS FPD SALES TO : 3730171 1996.06-06 16:28 #893 P.01/01

Flanders®

FLANDERS FILTERS INC.
531 Flanders Filters Road
Washington, NC 27889

Telephone: (919) 946-8081
FAX: (919) 946-3425

DATE: 06/06/96
TO: GARY TARDIFF
COMPANY: WHC
FAX NUMBER : 509/373-0171
FROM: MATT O'NEAL
NUMBER OF PAGES: (Including This Page): 1

RE: CARBON APPLICATION

OUR CARBON EXPERT HAS ADVISED THE FOLLOWING:

1: ACTIVATED CARBON WOULD BE THE PREFERRED MEDIA FOR THIS GENERAL APPLICATION. NUCLEAR GRADE CARBON IS IMPREGNATED SPECIFICALLY FOR ORGANIC IODIDE REMOVAL. THERE WOULD BE AN INCREASE IN THE LIFE EXPECTANCY, BUT IT WOULD BE MINIMAL (5-10%).

2: AT AMBIENT TEMPERATURES (70-80 DEG. F) AND AN RH OF 68%, THE CARBON CAN BE EXPECTED TO GAIN 10-15% OF ITS WEIGHT AS WATER. THIS TRANSLATES TO (9-13) LBS. OF WATER FOR A 16" ADSORBER.

HERE IS THE ESTIMATED PRICING FOR YOUR INFORMATION:

(1) CSC-16-62-AS ADSORBER WITH COMMERCIAL GRADE CARBON: $1484.00
(1) CSC-16-62-NS ADSORBER WITH NUCLEAR GRADE CARBON: $1562.00

ADD FOR (6) TEST CANNISTERS PER ADSORBER: $1206.00

CURRENT LEAD TIMES ARE APPROX. (8) WEEKS.
F.O.B.: WASHINGTON, NC (NO FREIGHT INCLUDED)
TERMS: NET (30) DAYS. NO TAXES WILL BE COLLECTED.

I HOPE THIS INFORMATION WILL BE HELPFUL TO YOU AND PLEASE CALL IF I MAY BE OF ANY FURTHER ASSISTANCE.

REGARDS, Matt

FROM :FLANDERS FILTERS FPD SALES TO : 3730171 1996.03-29 10:01 #983 P.01/01

Flanders®

FLANDERS FILTERS INC.
531 Flanders Filters Road
Washington, NC 27889

Telephone: (919) 946-8081
FAX: (919) 946-3425

DATE: 03/28/96
TO: GARY TARDIFF
COMPANY: WHC
FAX NUMBER : 509/373-0171
FROM: MATT O'NEAL
NUMBER OF PAGES: (Including This Page): 1

RE: CARBON ADSORPTION

OUR CARBON VENDOR HAS ESTIMATED THAT THE LIFE OF A 24"x24"x16" CARBON ADSORBER OPERATING AT 1,000 CFM AND CHALLENGED WITH THE CONCENTRATIONS OF NPH ONLY PER YOUR LIST WILL LAST APPROX. 1500 HRS.

I HOPE THIS WILL BE HELPFUL TO YOU AND PLEASE CALL IF YOU NEED ANYTHING ELSE.

REGARDS,

Matt

Flanders The Foremost Designers and Manufacturers of High Efficiency Air Filtration Systems

FROM :FLANDERS FILTERS TO : 3730171 1996.03-07 13:19 #927 P.01/01
FPD SALES

Flanders®

FLANDERS FILTERS INC.
531 Flanders Filters Road
Washington, NC 27889

Telephone: (919) 946-8081
FAX: (919) 946-3425

DATE: 03/07/96
TO: GARY TARDIFF
COMPANY: WHC
FAX NUMBER : 509/373-0171
FROM: MATT O'NEAL
NUMBER OF PAGES: (Including This Page): 1

RE: CARBON ADSORPTION

MY CARBON CONTACT IS NOT ABLE TO PROVIDE MUCH INSIGHT INTO YOUR REQUEST. CARBON LIFE COULD BE ANYWHERE FROM A FEW HOURS TO A FEW MONTHS DEPENDING ON WHETHER ALL CONTAMINANTS ARE PRESENT AT ONE TIME OR NOT. ALSO, HE HAS ADVISED THAT SOME OF THE CONTAMINANTS LISTED WOULD BE EXPECTED TO BE IN PARTICULATE PHASE NOT GASEOUS PHASE. ALSO, IF THE IODINE IS IN ORGANIC FORM THEN A RESIDENCE TIME OF 0.25 SEC. WOULD BE REQUIRED. THIS WILL REQUIRE (2) ADSORBERS AS EACH ONE IS RATED TO PROVIDE A 0.125 SEC. RESIDENCE TIME AT 1,000 CFM.

I APOLOGIZE THAT I AM UNABLE TO PROVIDE MORE INFORMATION. PLEASE FEEL FREE TO CONTACT ME IF YOU WISH TO PURSUE YOUR APPLICATION FURTHER.

REGARDS,

Matt

Flanders®

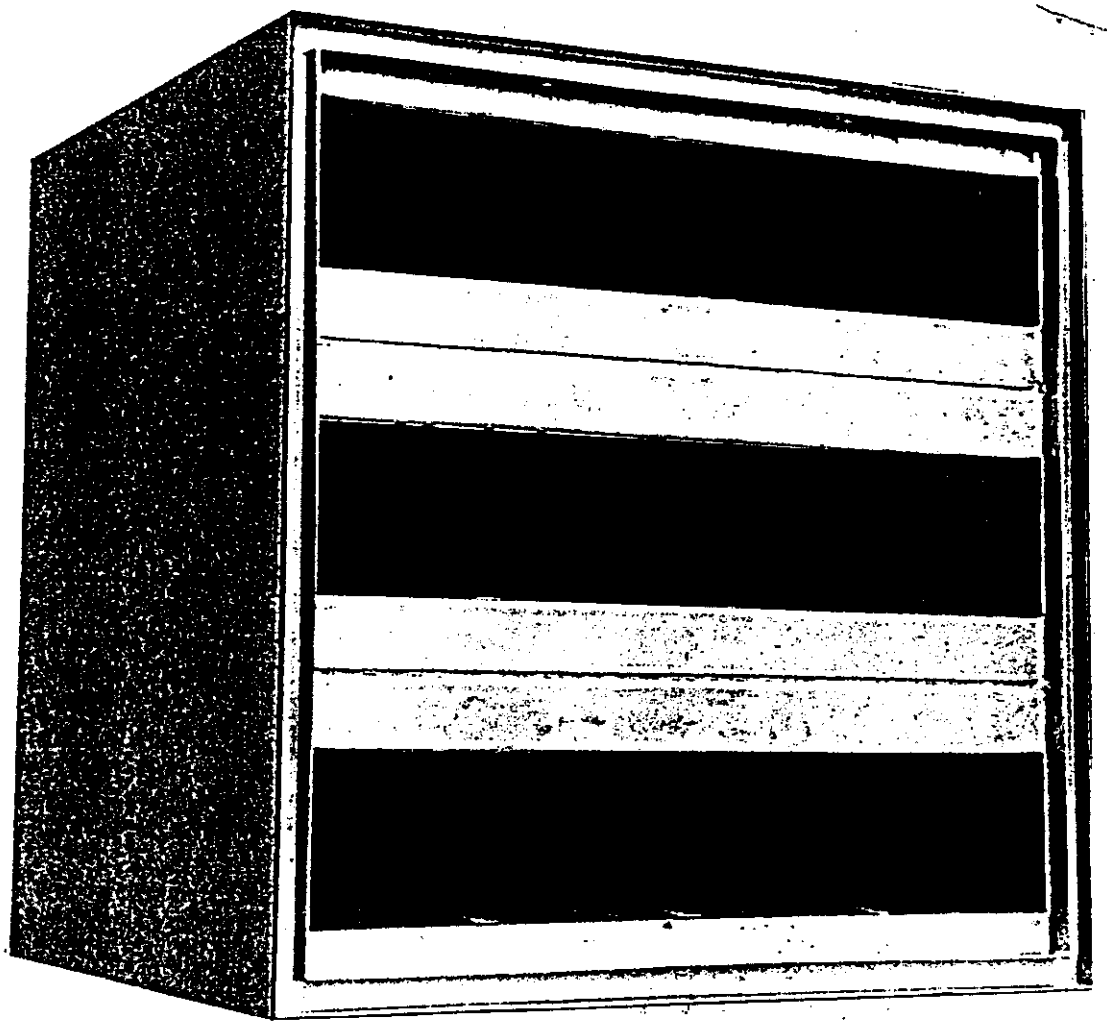

V-Bed Carbon Adsorbers

for high-efficiency containment of gas-phase emissions

Bulletin No. 894A

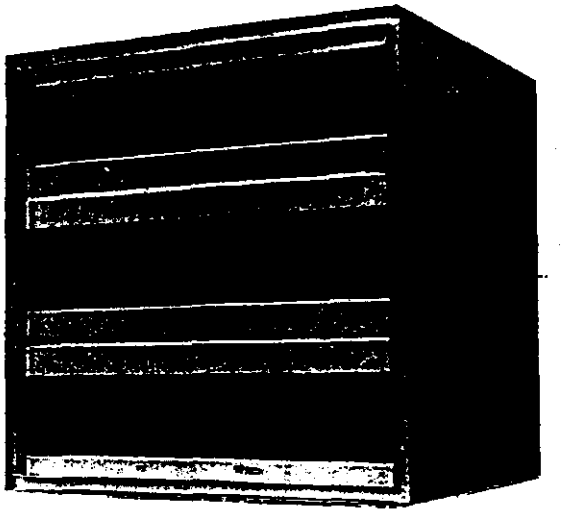

Flanders' V-Bed Carbon Adsorber Cells

V-Bed Carbon Adsorbers use activated or impregnated carbon as a filtering medium to remove gaseous emissions from nuclear, biological, and/or chemical process exhaust air. Due to the potentially hazardous nature of their end-use, the customer should consult with Flanders' technical representatives as early as possible during the design phase of the project to assure proper specifications for the adsorbers and the filtration system. Flanders' personnel have many years' experience with gas-phase and HEPA filtration systems and can provide assistance in adsorbent selection, residence time calculations, and system configuration.

Residence Time Calculation

Under actual operating conditions, the removal efficiency of an adsorber is determined by the type and amount of contaminant in the gas stream, and the *residence time*. Residence time is the time that the gas stream is in contact with the carbon. In most applications, a residence time of 0.125 second is sufficient. In other cases, residence time is a critical factor that must be calculated for the specific contaminant (i.e., radioactive isotope I-131, which requires a residence time of 0.250 second).

Quality Manufacturing and Testing

All units are manufactured in accordance with ANSI/ASME NQA-1, "Quality Assurance Program Requirements for Nuclear Power Plants." Flanders tests each adsorber to ensure a minimum mechanical efficiency of 99.9% per IES-RP-CC-008-84, "Recommended Practices for Gas-Phase Adsorber Cells". This test of the adsorber's removal efficiency on freon is used to determine whether leaks are present, but does not imply 99.9% efficiency on other contaminants.

Adsorber Design and Performance

All units are made with six 2" deep beds of carbon mounted in a "V" configuration in a steel cell. At rated airflow, residence time is 0.125 second. Face velocity across the beds is 80 FPM, and resistance is 1.25" w.g. Maximum operating temperature is 200° F.

Various grades of carbon are available to meet specific removal requirements:

Nuclear Grade: Granular activated coconut shell carbon impregnated with potassium iodine for removal of the radioactive isotope I-131.

Commercial Grade: Granular activated coconut shell carbon with a highly porous structure used for a wide range of gas phase applications.

Whetlerite: Granular activated coal base carbon impregnated with various metallic oxides.

NOTE: Carbon adsorbents can be "poisoned" by paint fumes or other gases commonly found in many facilities and must be carefully protected when stored. Even under ideal conditions, shelf life is limited to three years maximum. The customer should consult the factory representative regarding storage precautions.

DMMP-Qualified Adsorbers

Flanders model number 2VDM-W63-G16 has been tested and certified for DMMP Qualification at the U.S. Army Armament Munitions and Chemical Command, Aberdeen Proving Grounds. No other model numbers are currently available with DMMP Qualification.

Adsorber Housings

V-Bed Carbon Adsorbers are manufactured in standard sizes for use in bag-in/bag-out and side-load housings, and are available in both fluid seal and gasket seal designs. Flanders manufactures a complete line of housings for adsorbers and HEPA filters. Please see: **Bulletin No. 866** "E-5 Bag-Out Housings" (Fluid Seal); **Bulletin No. 868** "E-6 Bag-Out Housings" (Gasket Seal); **Bulletin No. 877** "E-7 and E-8 Bag-Out Housings" (Fluid and Gasket Seal); or **Bulletin No. 893**, "C-Series Side-Load Housings" (Fluid and Gasket Seal).

©FLANDERS FILTERS, INC.

Ordering Information

Model numbers for Flanders' V-Bed Carbon Adsorbers are coded for number and configuration of beds, type of carbon adsorbent, frame material, the method of the adsorber-to-housing seal, and size.

Prefix	Installation/Removal Clips (Fluid Seal Units Only)	T
Model	2" Carbon Beds In 'V' Configuration	2V
	Same Design, DMMP-Qualified	2VDM
Adsorbent*	Nuclear Grade	N
	Commercial Grade	C
	Whetlerite Type	W
Quantity of Beds	Six	6
Frame Material	14-ga. Type 304 Stainless Steel	3
Adsorber/Housing Seal	Fluid Seal	F
	Gasket Seal	G
Nominal Depth	24"x24"x12"	12
	24"x24"x16"	16
	24"x24"x18"	18

Example:
T-2V-N63-F12

(Nuclear Grade Adsorber, 12" deep with fluid seal channel and T-clips, as illustrated below.)

*** Special mesh sizes available**

D Depth	H Height	W Width	Rated Airflow	Approximate Resistance			Average Weight
				Nuclear	Commercial	Whetlerite	
11-1/2"	24"	24"	700	1.25" w.g.	1.25" w.g.	4.0" w.g.	135 lbs.
16"	24"	24"	1000	1.25" w.g.	1.25" w.g.	4.0" w.g.	160 lbs.
18"	24"	24"	1250	1.25" w.g.	1.25" w.g.	4.0" w.g.	190 lbs.

Residence Time – *0.125* Sec. at Rated Airflow

~75 lbs Carbon in each Filter can be regenerated

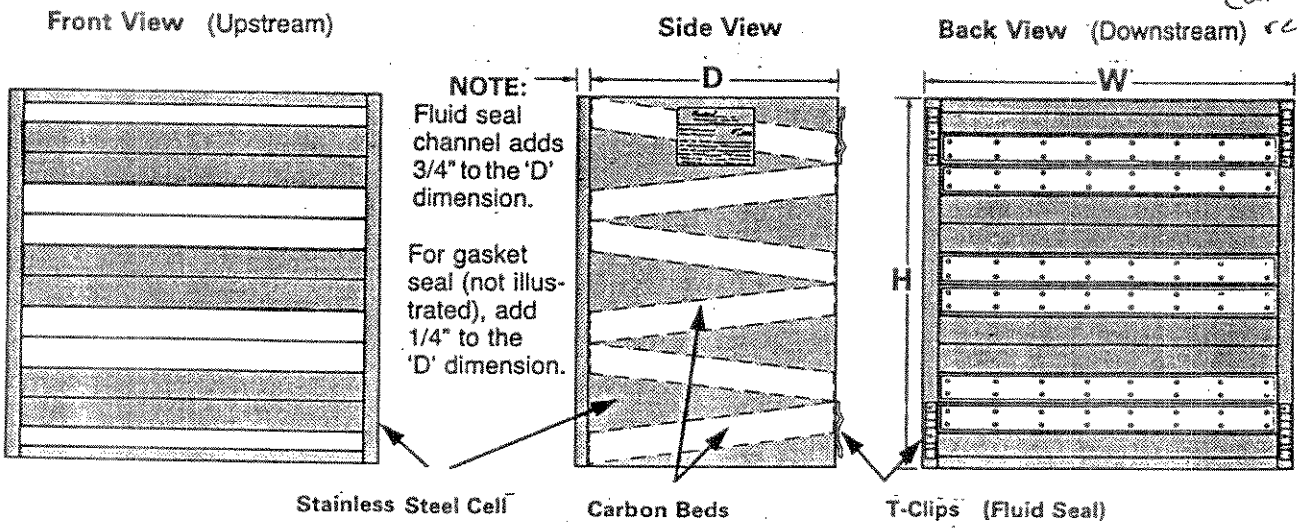

©FLANDERS FILTERS, INC.

Suggested Specifications

Materials and Construction

V-Bed Carbon Adsorber cells shall be constructed of 14 gauge Type 304 stainless steel. The screens on the carbon beds shall be constructed of 26 gauge perforated stainless steel. All joints and seams shall be seal welded and pop-riveted and ground free of all burrs and sharp edges. Manufacture of the unit shall be in accordance with the procedures of ANSI/ASME NQA-1.

Carbon Adsorbent

Nuclear Grade Carbon shall be 8 x 16 mesh granular activated coconut shell carbon impregnated with potassium iodine for removal of the isotope I-131.

Commercial Grade Carbon shall be 8 x 16 mesh granular activated coconut shell carbon with a highly porous structure for use in a wide range of gas phase applications.

Whetlerite Type Carbon shall be 12 x 30 mesh coal-based granulated activated carbon impregnated with metallic oxides for enhanced chemical adsorption.

Adsorber-To-Housing Fluid Seal

Adsorbers designed for use in fluid seal housings shall be equipped with a fluid seal channel on one side of the adsorber cell. The channel shall be filled with a non-drying gel seal compound formulated for high efficiency applications. A continuous knife-edge component located on the housing shall mate into the gel seal compound to effect a leak-tight interface between the adsorber and its housing. The adsorber shall be equipped with T-clips on its air-exiting side. A mechanical device in the housing shall hook into the T-clips to move the adsorber in and out of its sealing position on the knife edge.

Adsorber-to-Housing Gasket Seal

Adsorbers designed for use in gasket seal housings shall be provided with a closed cell neoprene gasket material located on one side. Standard gasket dimension shall be 1/4" thick by 3/4" wide. NOTE: *Flanders does not recommend the use of gasket seal in highly-critical applications. Gaskets often lose their flexibility, or "memory", allowing the bypass of unfiltered air.*

Testing

Each adsorber shall be factory-tested to determine the mechanical efficiency of the assembled unit and must exhibit a minimum efficiency of 99.9% per IES-RP-CC-008-84. Each Nuclear Grade adsorber shall be manufactured and tested according to Flanders Quality Assurance Program, which addresses the 18-point criteria of 10CFR50, Appendix B.

DMMP-Qualified designs units shall have been tested for rough handling and DMMP (dimethymethylphosphonate) life (breakthrough time) by the U.S. Army Armament Munitions and Chemical Command, Aberdeen Proving Grounds, MD. The DMMP gas life of the adsorber shall not be less than 35 minutes.

Options

Please consult the factory or factory representative for information on the following options.

Carbon Adsorbent—Special grades of carbon to meet specific removal requirements are available.

Carbon Refilling — Many applications allow for refilling the carbon adsorbent. Factory refilling is available from Flanders as an option. Please inquire in advance about safety requirements, pricing, and the availability of the particular adsorbent.

Replacement Components—Flanders stocks certain grades of carbon for shipment to customers who are equipped for on-site refilling. Replacements for fluid seal compound, gaskets, PVC bags, and other components of the adsorber are also available.

Wood Construction—Adsorber cells can be constructed from fire-retardant plywood for certain uses requiring incineration.

Drawer-Type Design — Drawer-type carbon adsorbers (Type III per IES-RP-CC-008-84) are available.

IMPORTANT NOTICE

Each Flanders V-Bed Carbon Adsorber Cell is factory tested to meet the requirements of IES RP-CC-008-84 for Type I adsorbers. Test results appear on both the adsorber label and upon the carton label. An additional quality assurance test report is available on request. Flanders Filters, Inc. recommends that these adsorbers be tested in service by qualified personnel to ensure that they have been correctly installed. Flanders service personnel are available for installations, supervision of installation, testing and certification of compliance to industry and government standards and instruction of the owner's personnel in testing and maintenance procedures.

Flanders does not guarantee that its equipment will operate at the performance levels given on the identification labels or in the catalog specifications under all conditions of installation and use, nor does Flanders guarantee the suitability of its product for the particular end use which may be contemplated by the buyer. For best results, it is recommended that the buyer supply complete information about the operating conditions of the ventilation system to Flanders for evaluation. When the system components are supplied to the buyer or his agent for final installation and assembly in the field, it should be under the supervision of factory trained personnel.

Failure to adhere to these recommendations or failure of buyer to have filters timely retested and serviced will nullify or limit any warranties which might otherwise apply and may result in a compromised installation.

Flanders®

Flanders Filters, Inc.
P.O. Box 1708
Washington, North Carolina 27889-1708 USA
✆ **919/946-8081**
FAX: 919/946-3425

©FLANDERS FILTERS, INC. FOREMOST PRODUCERS OF HEPA FILTERS AND SYSTEMS FOR SCIENCE AND INDUSTRY SINCE - 1950

RMIS Viewprint Document Cover Sheet

This document was retrieved from the Records Management Information System (RMIS). It is intended for information only and may not be the most recent or updated version.

Accession #: **D8314097**

Document #: **ECN-710524**

Title/Desc:
SUPERSEDE ECN-710498 & CHANGE DWG TO DISCONNECT VAPOR MIXING SYS FROM BREATHER FILTER & RETURN BREATHER FILTER TO NORMAL PASSIVE VENTILATION

Pages: **14**

S
ESSENTIAL

ENGINEERING CHANGE NOTICE

4/12/00 gms

Page 1 of 8 14

1. ECN 710524

Proj. ECN

2. ECN Category (mark one)	3. Originator's Name, Organization, MSIN, and Telephone No.	4. USQ Required?	5. Date
Supplemental ☐ Direct Revision ☐ Change ECN ☐ Temporary ☐ Standby ☐ Supersedure ☒ Cancel/Void ☐	DANIEL M. STENKAMP, MAINTENANCE CONCEPTS 77910, R2-88, 373-3408 85 9612	TF-00-0286 Rev 0 ☒ Yes ☐ No	01 APR. 00
	6. Project Title/No./Work Order No. ~~106843~~ DMS 4/11/00 241-C-103 BREATHER FILTER 102467	7. Bldg./Sys./Fac. No. 241-C	8. Approval Designator ESQ
	9. Document Numbers Changed by this ECN (includes sheet no. and rev.) SEE BLOCK 13a	10. Related ECN No(s). 710498	11. Related PO No. N/A

12a. Modification Work	12b. Work Package No.	12c. Modification Work Completed	12d. Restored to Original Condition (Temp. or Standby ECNs only)
☒ Yes (fill out Blk. 12b) ☐ No (NA Blks. 12b, 12c, 12d)	2E.00-1066	Design Authority/Cog. Engineer Signature & Date	N/A Design Authority/Cog. Engineer Signature & Date

13a. Description of Change

13b. Design Baseline Document? ☒ Yes ☐ No

BLOCK 9 CONT.:

H-2-90718 SHT 1 REV 9
H-14-030013 SHT 6 REV 2
H-14-100290 sht 1 Rev 0
H-14-100290 sht 2 Rev 0

H-2-90718 SHT 7 REV 0
H-14-030113 SHT 1 REV 01
H-14-100290 sht 3 Rev 0
H-14-100293 sht 1 Rev 0
H-14-020113 sht 1 Rev 0

THIS ECN SUPERSEDES ECN 710498 IN ITS ENTIRETY

THIS ECN DISCONNECTS THE VAPOR MIXING SYSTEM FROM THE BREATHER FILTER AND RETURNS THE BREATHER FILTER TO THE NORMAL PASSIVE VENTILATION TYPE CONFIGURATION.

14a. Justification (mark one)

- Criteria Change ☒
- Design Improvement ☐
- Environmental ☐
- Facility Deactivation ☐
- As-Found ☐
- Facilitate Const. ☐
- Const. Error/Omission ☐
- Design Error/Omission ☐

14b. Justification Details

EXISTING VAPOR MIXING NO LONGER REQUIRED. DESIGN VERIFICATION PERFORMED VIA INDEPENDENT REVIEW PER IP-0842, VOL. IV, SECT. 4.24 AND DOCUMENTED BY SIGNATURE ON PAGE 2.

THIS MODIFICATION WILL NOT CHANGE COLLECTIVE DOSE SINCE IT HAS NO IMPACT ON RADIOLOGICAL SOURCES, CONTAMINATION CONTROL, OR SHIELDING.

15. Distribution (include name, MSIN, and no. of copies)

DAN STENKAMP	R2-88	(2) ADVANCED COPIES
DAVE PARKMAN	S5-13	(1)
JAHAN LOHRASBI	S5-05	(1)
DAN BAIDE	S5-05	(1)
W. SHEPHERD	S6-16	1
IOF #9	S2-25	1

RELEASE STAMP

DATE: MAY 30 2000
STA: 4
HANFORD RELEASE
ID: 2

A-7900-013 (05/96)

ENGINEERING CHANGE NOTICE

Page 2 of 6 14

1. ECN (use no. from pg. 1) 710524

16. Design Verification Required	17. Cost Impact		18. Schedule Impact (days)
	ENGINEERING	CONSTRUCTION	
☒ Yes	Additional ☐ $ N/A	Additional ☐ $ N/A	Improvement ☐ N/A
☐ No	Savings ☐ $	Savings ☐ $	Delay ☐

19. Change Impact Review: Indicate the related documents (other than the engineering documents identified on Side 1) that will be affected by the change described in Block 13. Enter the affected document number in Block 20.

SDD/DD	☐	Seismic/Stress Analysis	☐	Tank Calibration Manual	☐
Functional Design Criteria	☐	Stress/Design Report	☐	Health Physics Procedure	☐
Operating Specification	☐	Interface Control Drawing	☐	Spares Multiple Unit Listing	☐
Criticality Specification	☐	Calibration Procedure	☐	Test Procedures/Specification	☐
Conceptual Design Report	☐	Installation Procedure	☐	Component Index	☐
Equipment Spec.	☐	Maintenance Procedure	☐	ASME Coded Item	☐
Const. Spec.	☐	Engineering Procedure	☐	Human Factor Consideration	☐
Procurement Spec.	☐	Operating Instruction	☐	Computer Software	☐
Vendor Information	☐	Operating Procedure	☐	Electric Circuit Schedule	☒
OM Manual	☐	Operational Safety Requirement	☐	ICRS Procedure	☐
FSAR/SAR	☐	IEFD Drawing	☐	Process Control Manual/Plan	☐
Safety Equipment List	☐	Cell Arrangement Drawing	☐	Process Flow Chart	☐
Radiation Work Permit	☐	Essential Material Specification	☐	Purchase Requisition	☐
Environmental Impact Statement	☐	Fac. Proc. Samp. Schedule	☐	Tickler File	☐
Environmental Report	☐	Inspection Plan	☐		☐
Environmental Permit	☐	Inventory Adjustment Request	☐		☐

20. Other Affected Documents: (NOTE: Documents listed below will not be revised by this ECN.) Signatures below indicate that the signing organization has been notified of other affected documents listed below.

Document Number/Revision	Document Number/Revision	Document Number/Revision
Vent and Balance procedure		
3-VB-157C, PCA by		
J. Lohrasbi		

21. Approvals

	Signature	Date		Signature	Date
Design Authority	DuBruy	5/02/00	Design Agent		
Cog. Eng.	D. B. Parkema	4-17-00	PE		
Cog. Mgr.	[illegible]	5-5-00	QA		
QA	W. L. Adams	5-9-00	Safety		
Safety	Jeff Rynchorn	5-25-00	Design		
Environ.	[illegible]	5/8/00	Environ.		
Other	David A. Stefanga	04/01/00	Other		
	[illegible]	4-24-00			

DEPARTMENT OF ENERGY

Signature or a Control Number that tracks the Approval Signature

ADDITIONAL

A-7900-013R (05/95)

ENGINEERING CHANGE NOTICE CONTINUATION SHEET	Page 3 of 14	ECN 710524
		Date 04/01/00

ON DRAWING H-2-90718 SHT 7 REVISE AS FOLLOWS: WAS

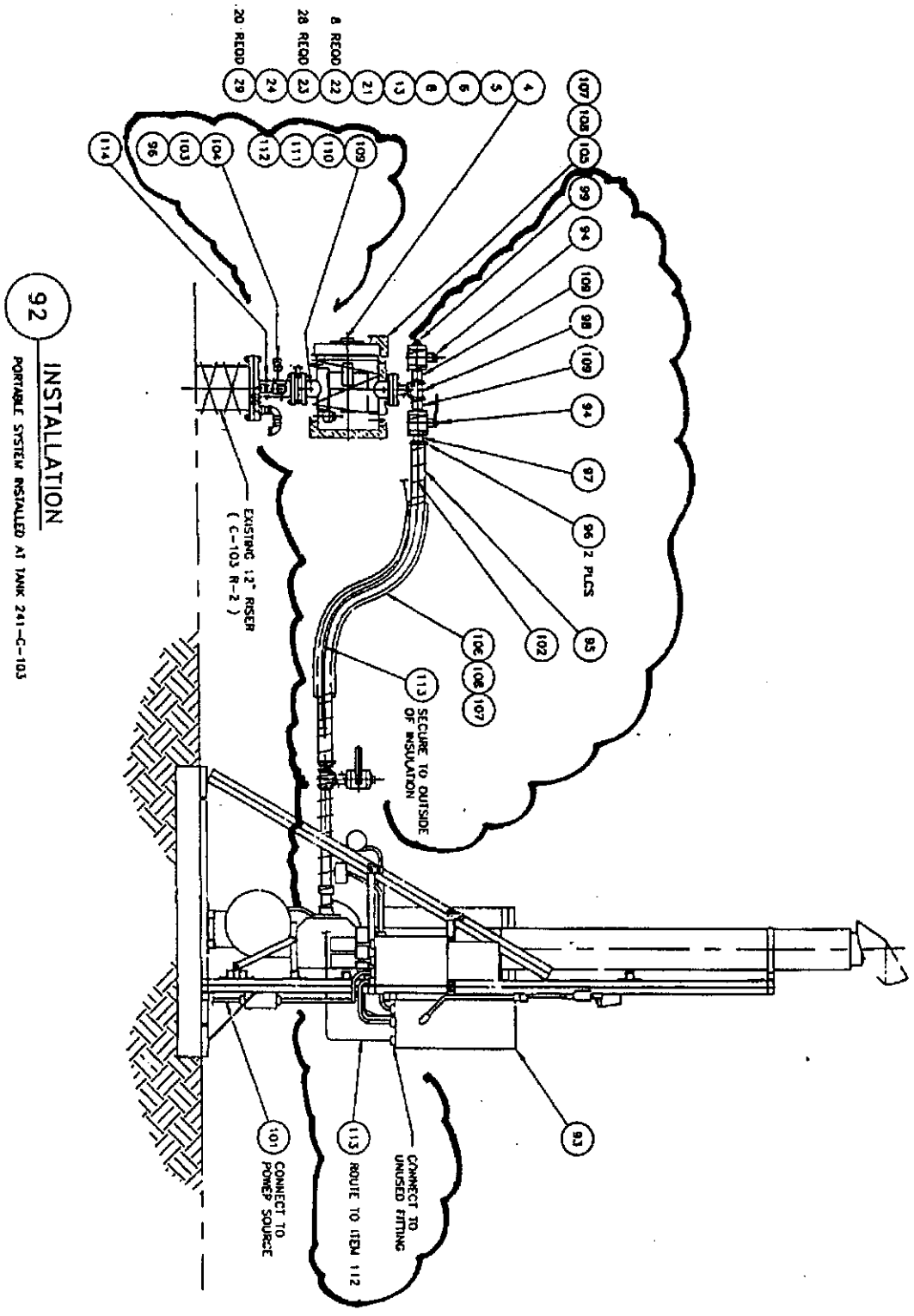

ENGINEERING CHANGE NOTICE CONTINUATION SHEET

Page 4 of 14

ECN 710524

Date 04/01/00

ON DRAWING H-2-90718 SHT 7 REVISE AS FOLLOWS: IS (REMOVE HOSES ETC CONNECTING BREATHER FILTER TO VAPOR MIXING SYSTEM. CONVERT BREATHER FILTER BACK TO TYPICAL CONFIGURATION.) DELETE ITEM NUMBERS 95-98, 102-104, 106, 109, 110, 112 AND 113. ON DRAWING H-2-90718 SHT 1 IN THE MATERIAL LIST IN THE QTY REQD COLUMN OF -170 ADD QUANTITIES FOR ITEM NUMBER 14 AND 26-28.

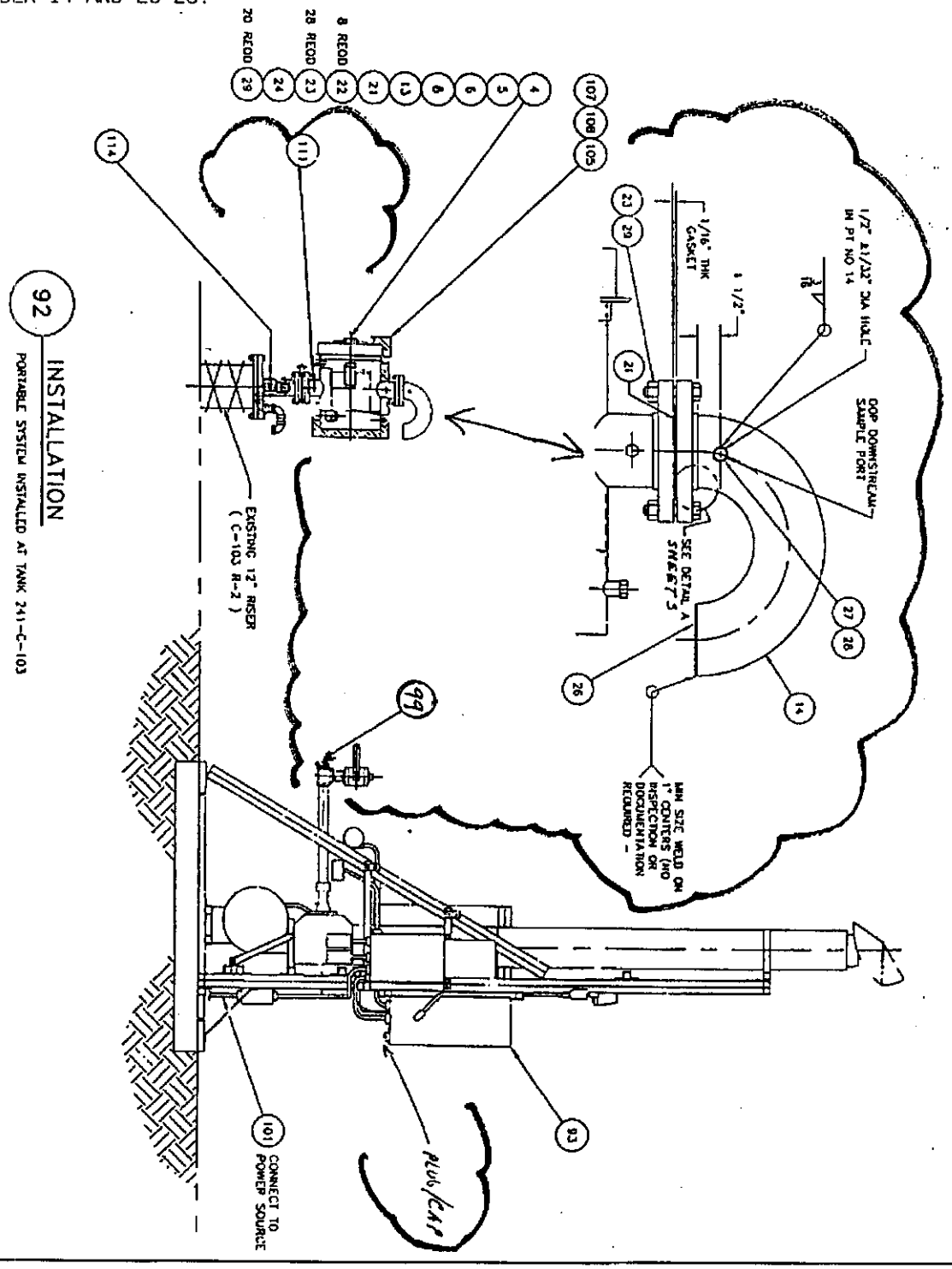

ENGINEERING CHANGE NOTICE CONTINUATION SHEET	Page 5 of 14	ECN 710524
		Date 04/01/00

REVISE DRAWING H-14-030113 SHT 1 TO SHOW HEAT TRACE DISCONNECTED AND CIRCUIT BREAKER SPARED OUT.

WAS

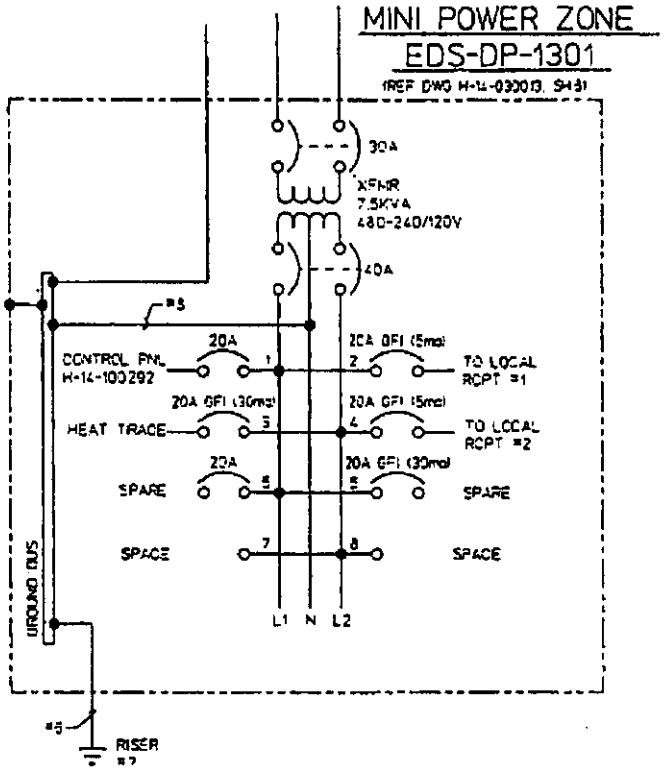

IS

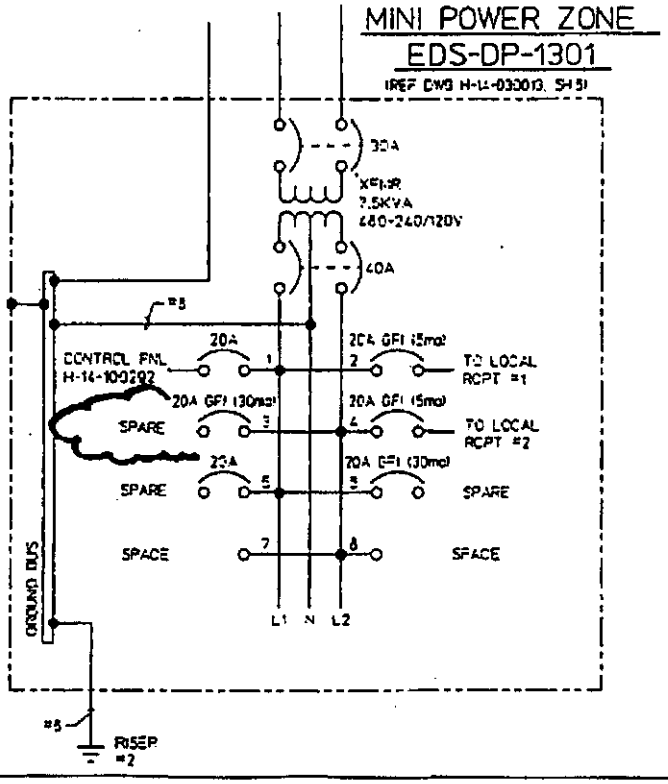

ENGINEERING CHANGE NOTICE CONTINUATION SHEET Page 6 of 14

ECN 710524
Date 04/01/00

REVISE DRAWING H-14-030013 SHT 6 TO SHOW HEAT TRACE DISCONNECTED AND CIRCUIT BREAKER SPARED OUT.

WAS

PANEL MFG: SQUARE D
PANEL TYPE (MODEL): MINI POWER ZONE, MPZ7540F
MAIN BRKR TYPE: (SECONDARY MAIN) SQUARE D, QO-240

PANELBOARD: EDS-DP-1301 LOCATION: 241-C, TANK C-103
FED FROM: DISTR CENTER, BKR B6

NEMA TYPE: 3R ■ MAIN BREAKER
■ SURFACE MOUNT □ LUGS ONLY
□ FLUSH MOUNT □ TOP □ BOTTOM FEED

REMARKS	SCHEME NUMBER	WATTS/HP PH A	WATTS/HP PH B	LOAD DESCRIPTION	SYS NO.	CKT NO.	A	B
		–		SPACE				40
			–	SPACE				
		285		VAPOR MIXING SYSTEM CONTROL PANEL VTP-PNL-1303		1	20	20
GFI-EDP, 30mA TRIP, SELF REGULATING .5W/FT HEAT TRACE			300	HEAT TRACE		3	20	20
		–		SPARE		5	20	20
			–	SPACE		7		
	SUBTOTAL	285	300					

TOTAL WATTS PHASE A: 465
TOTAL WATTS PHASE B: 480
TOTAL: 945

IS

PANEL MFG: SQUARE D
PANEL TYPE (MODEL): MINI POWER ZONE, MPZ7540F
MAIN BRKR TYPE: (SECONDARY MAIN) SQUARE D, QO-240

PANELBOARD: EDS-DP-1301 LOCATION: 241-C, TANK C-103
FED FROM: DISTR CENTER, BKR B6

NEMA TYPE: 3R ■ MAIN BREAKER
■ SURFACE MOUNT □ LUGS ONLY
□ FLUSH MOUNT □ TOP □ BOTTOM FEED

REMARKS	SCHEME NUMBER	WATTS/HP PH A	WATTS/HP PH B	LOAD DESCRIPTION	SYS NO.	CKT NO.	A	B
		–		SPACE				40
			–	SPACE				
		285		VAPOR MIXING SYSTEM CONTROL PANEL VTP-PNL-1303		1	20	20
GFI-EDP, 30mA TRIP,			–	SPARE		3	20	20
		–		SPARE		5	20	20
			–	SPACE		7		
	SUBTOTAL	285	–					

TOTAL WATTS PHASE A: 465
TOTAL WATTS PHASE B: 180
TOTAL: 645

ENGINEERING CHANGE NOTICE CONTINUATION SHEET

Page 7 of 14

ECN 710524

Date 04/01/00

REVISE DRAWING H-14-020113 SHT 1 AS FOLLOWS:

WAS

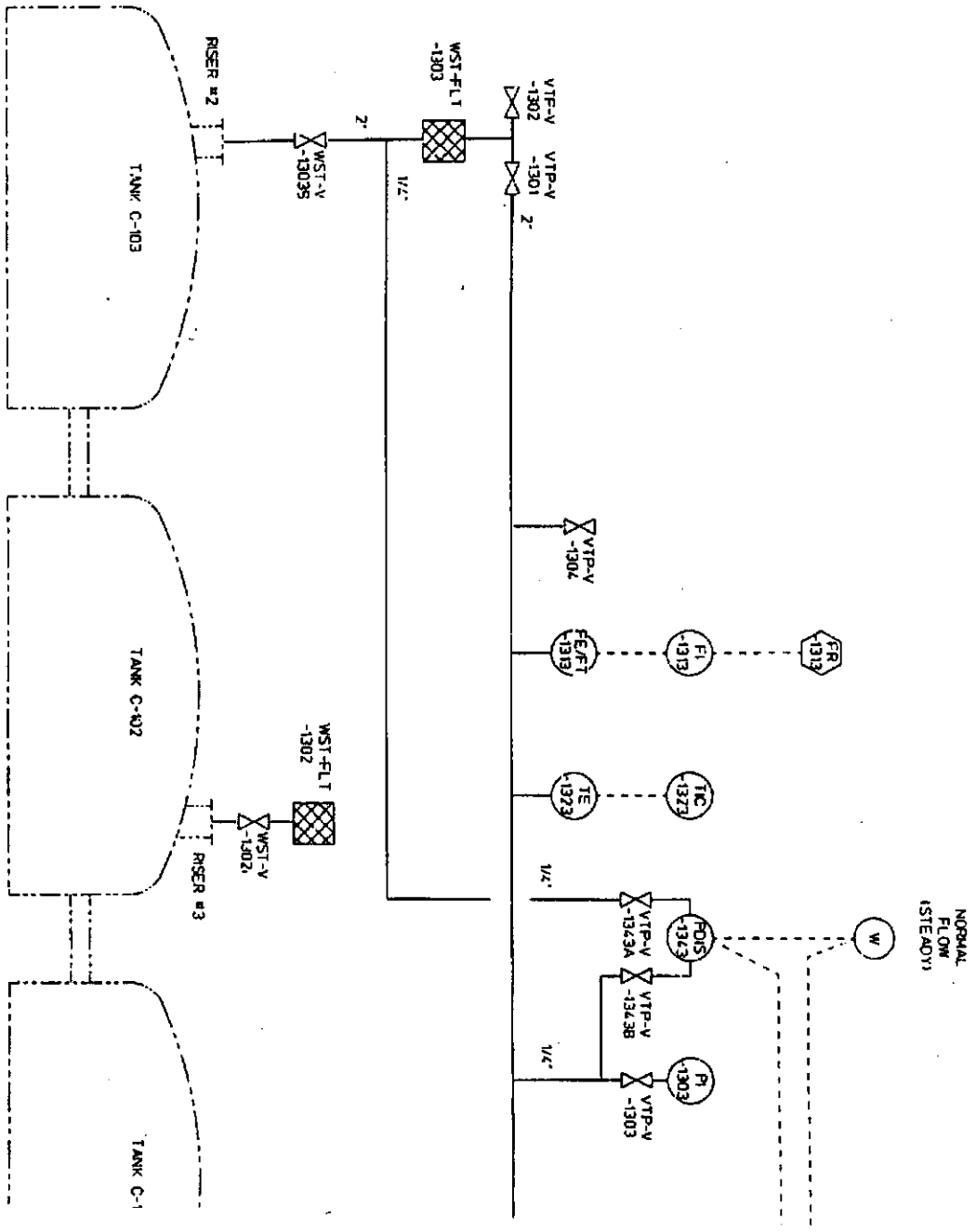

ENGINEERING CHANGE NOTICE CONTINUATION SHEET	Page 8 of 14	ECN 710524
		Date 04/01/00

REVISE DRAWING H-14-020113 SHT 1 AS FOLLOWS:

IS

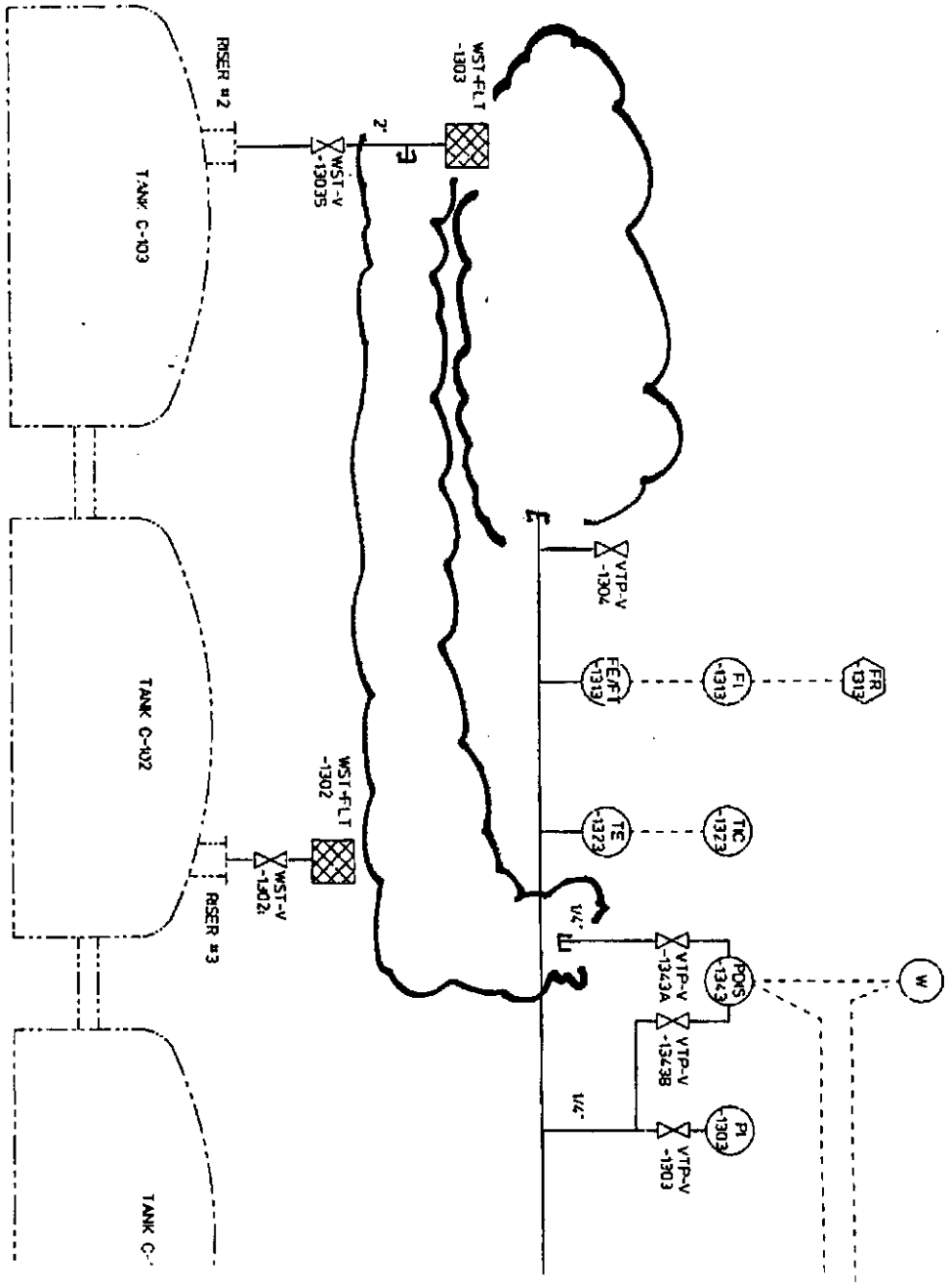

ENGINEERING CHANGE NOTICE CONTINUATION SHEET

ECN 710524 | Page 9 of 14 | Date 04/01/00

REVISE DRAWING H-14-100293 SHT 1 AS FOLLOWS:

WAS

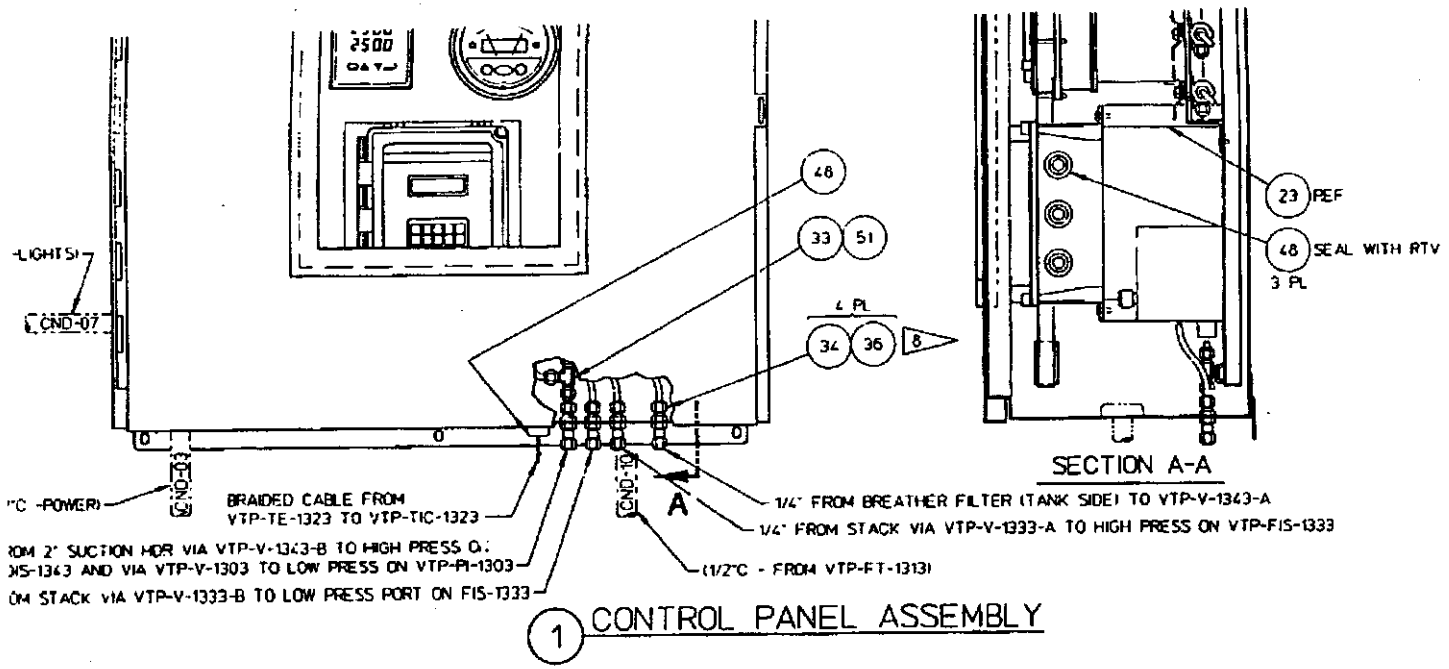

1 CONTROL PANEL ASSEMBLY

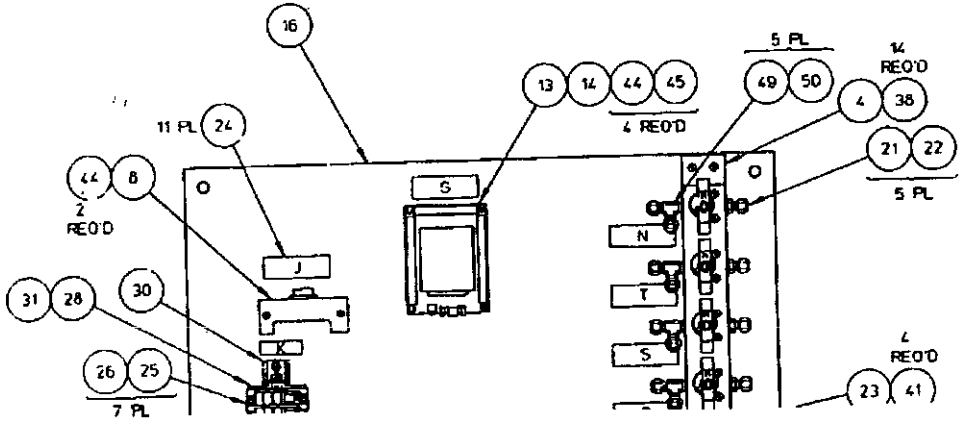

ENGINEERING CHANGE NOTICE CONTINUATION SHEET

Page 10 of 14

ECN 710524

Date 04/01/00

REVISE DRAWING H-14-100293 SHT 1 AS FOLLOWS:

IN THE MATERIAL LIST FOR PART NUMBER 50 CHANGE IS THE QUANTITY FROM "5" TO "6". DELETE ITEM "N" FROM THE NAMEPLATE SCHEDULE.

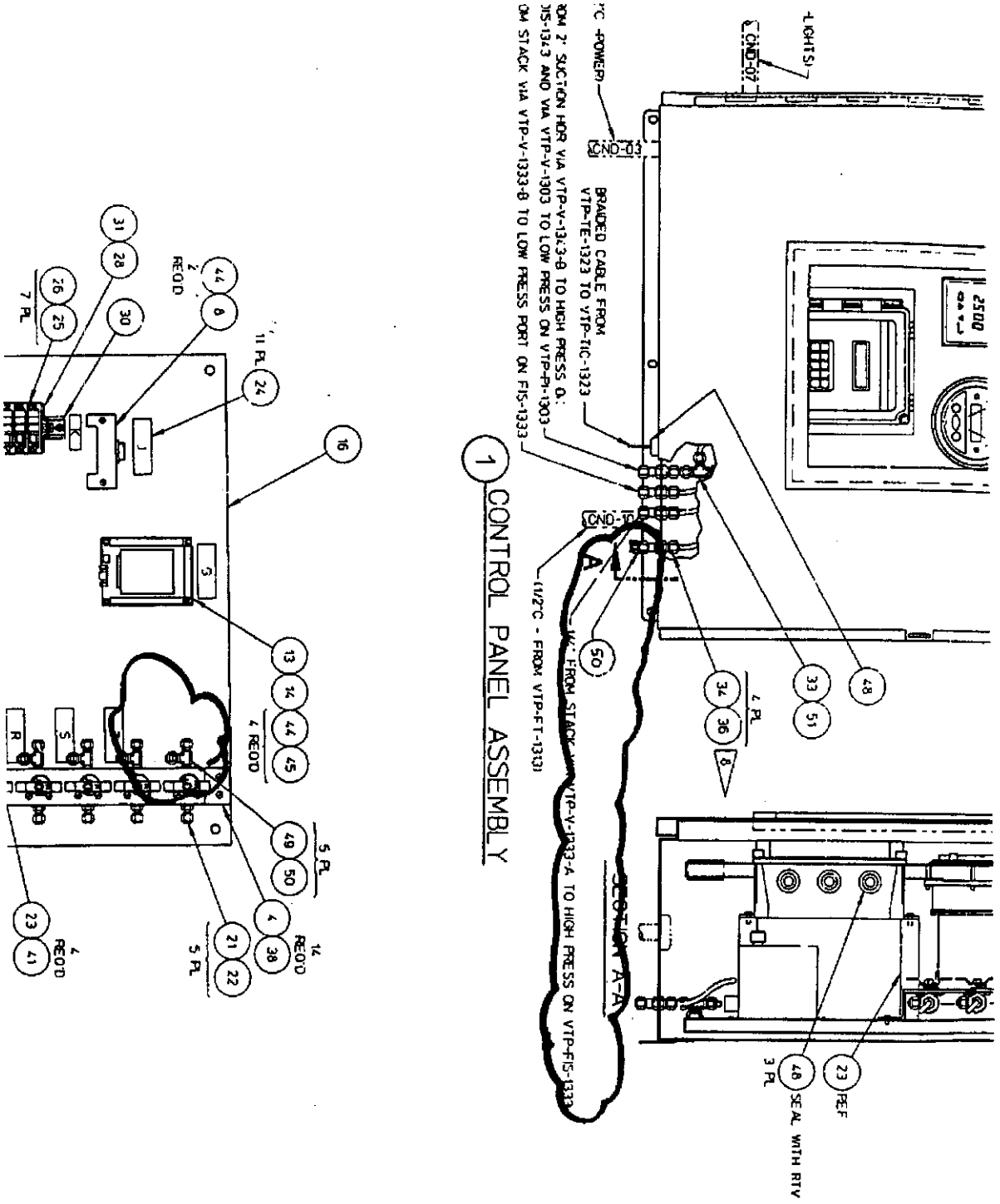

ENGINEERING CHANGE NOTICE CONTINUATION SHEET

Page 11 of 14

ECN 710524

Date 04/01/00

REVISE DRAWING H-14-100290 SHT 1 AS FOLLOWS: DELETE PART NUMBER 100 AND 110 FROM THE MATERIAL LIST.

REVISE DRAWING H-14-100290 SHT 3 AS FOLLOWS:

WAS

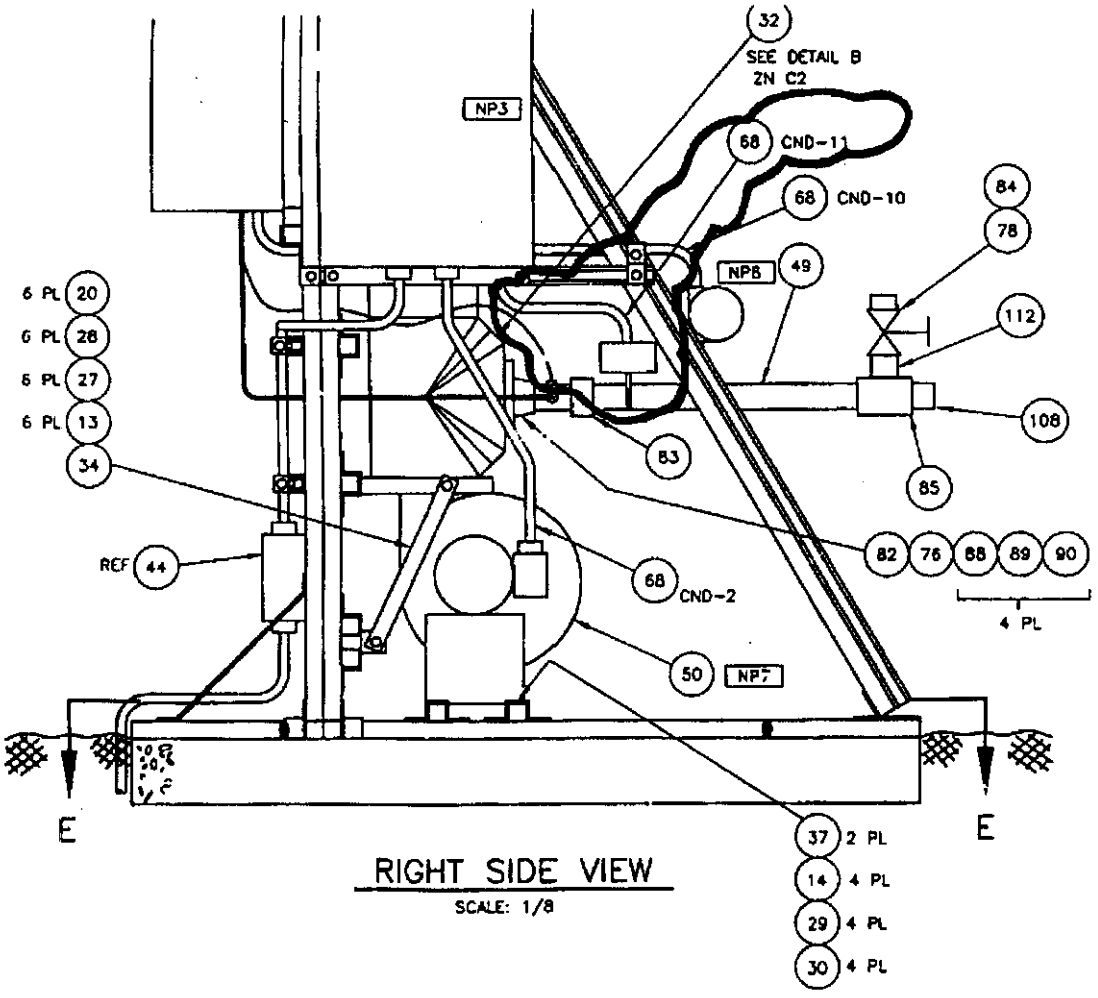

RIGHT SIDE VIEW

SCALE: 1/8

ENGINEERING CHANGE NOTICE CONTINUATION SHEET	Page 12 of 14	ECN 710524
		Date 04/01/00

REVISE DRAWING H-14-100290 SHT 3 AS FOLLOWS:

IS

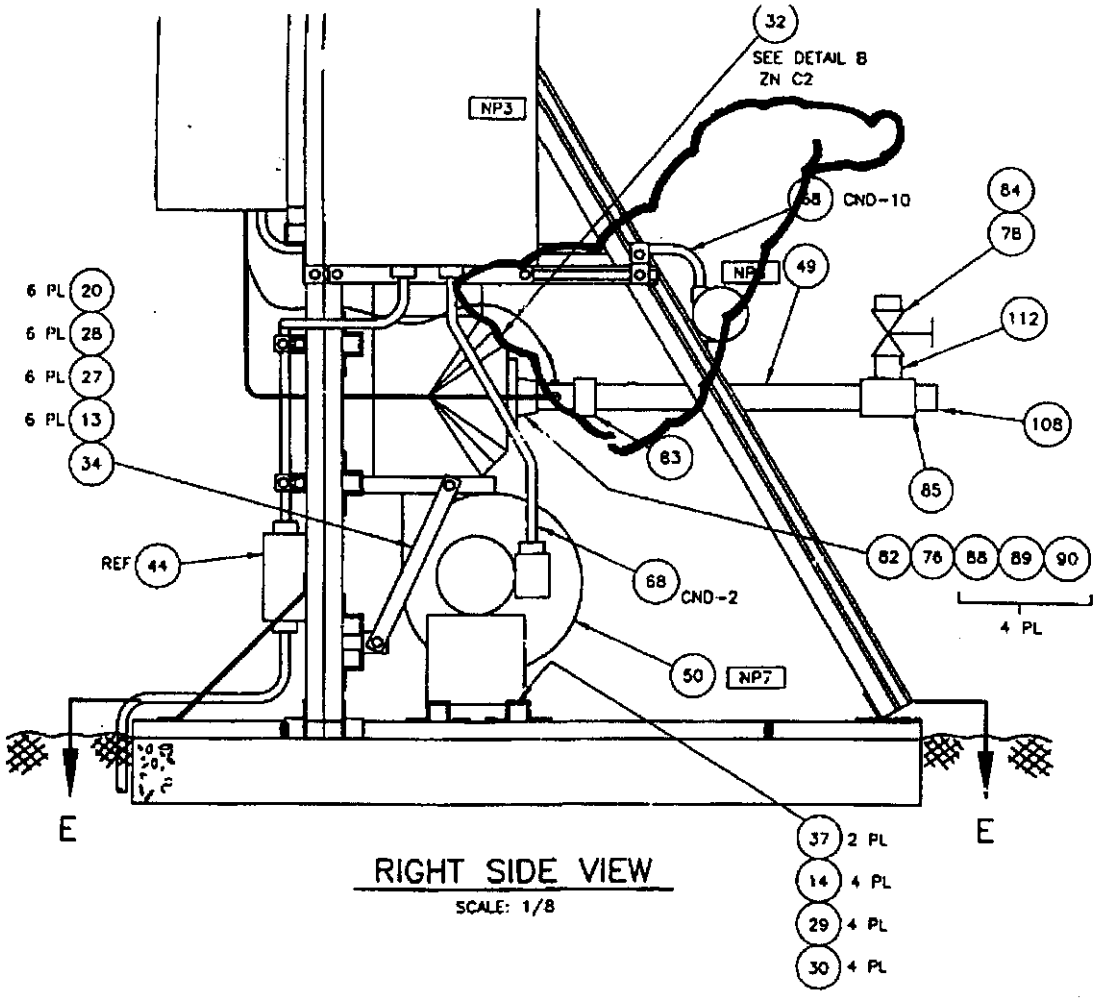

RIGHT SIDE VIEW

SCALE: 1/8

ENGINEERING CHANGE NOTICE CONTINUATION SHEET

Page 13 of 14

ECN 710524

Date 04/01/00

REVISE DRAWING H-14-100290 SHT 2 AS FOLLOWS:

WAS

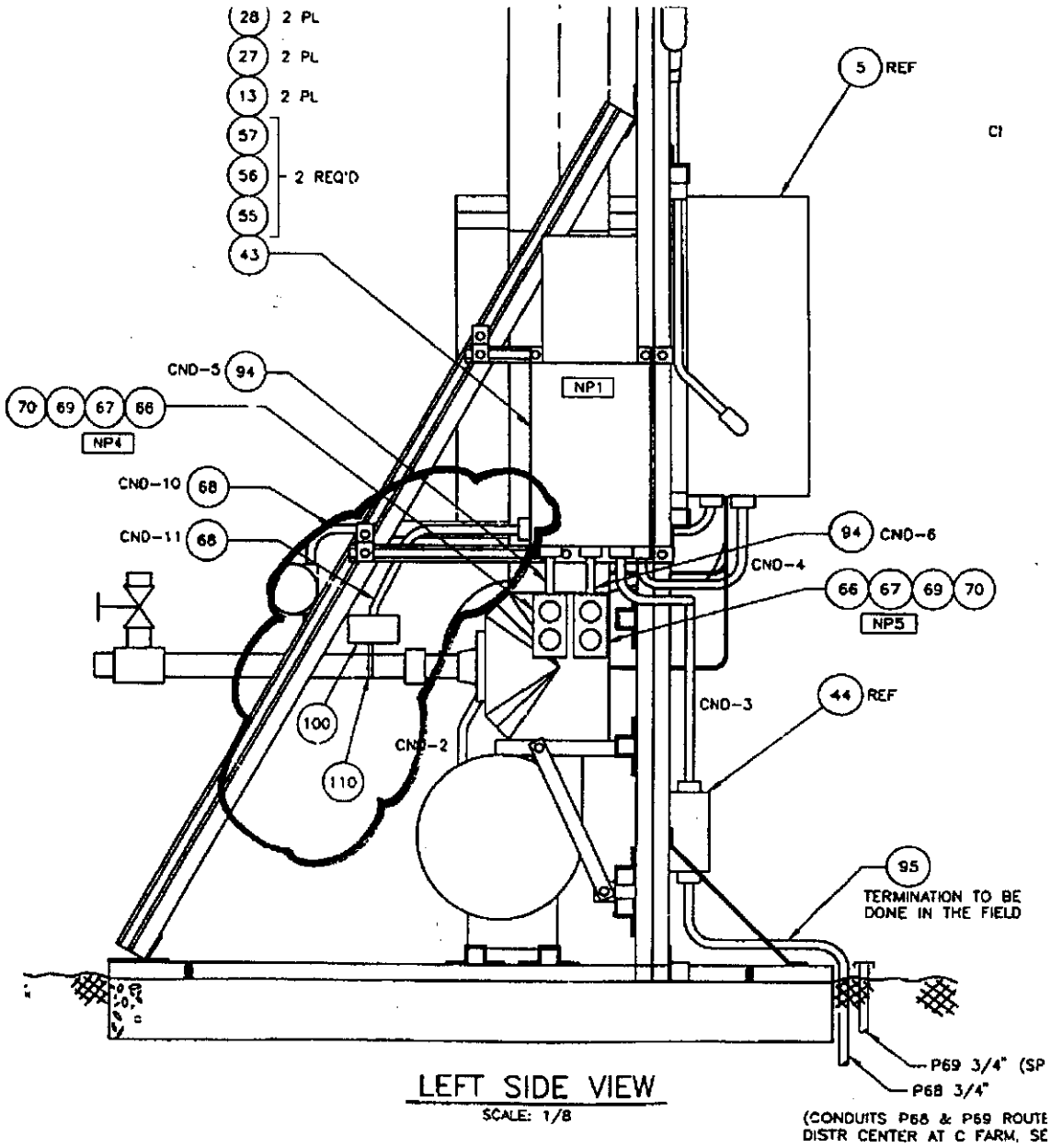

LEFT SIDE VIEW

SCALE: 1/8

ENGINEERING CHANGE NOTICE CONTINUATION SHEET

Page 14 of 14

ECN 710524

Date 04/01/00

REVISE DRAWING H-14-100290 SHT 2 AS FOLLOWS: DELETE THE ENTRY FOR CND-11 FROM THE CONDUIT RUN SCHEDULE

IS

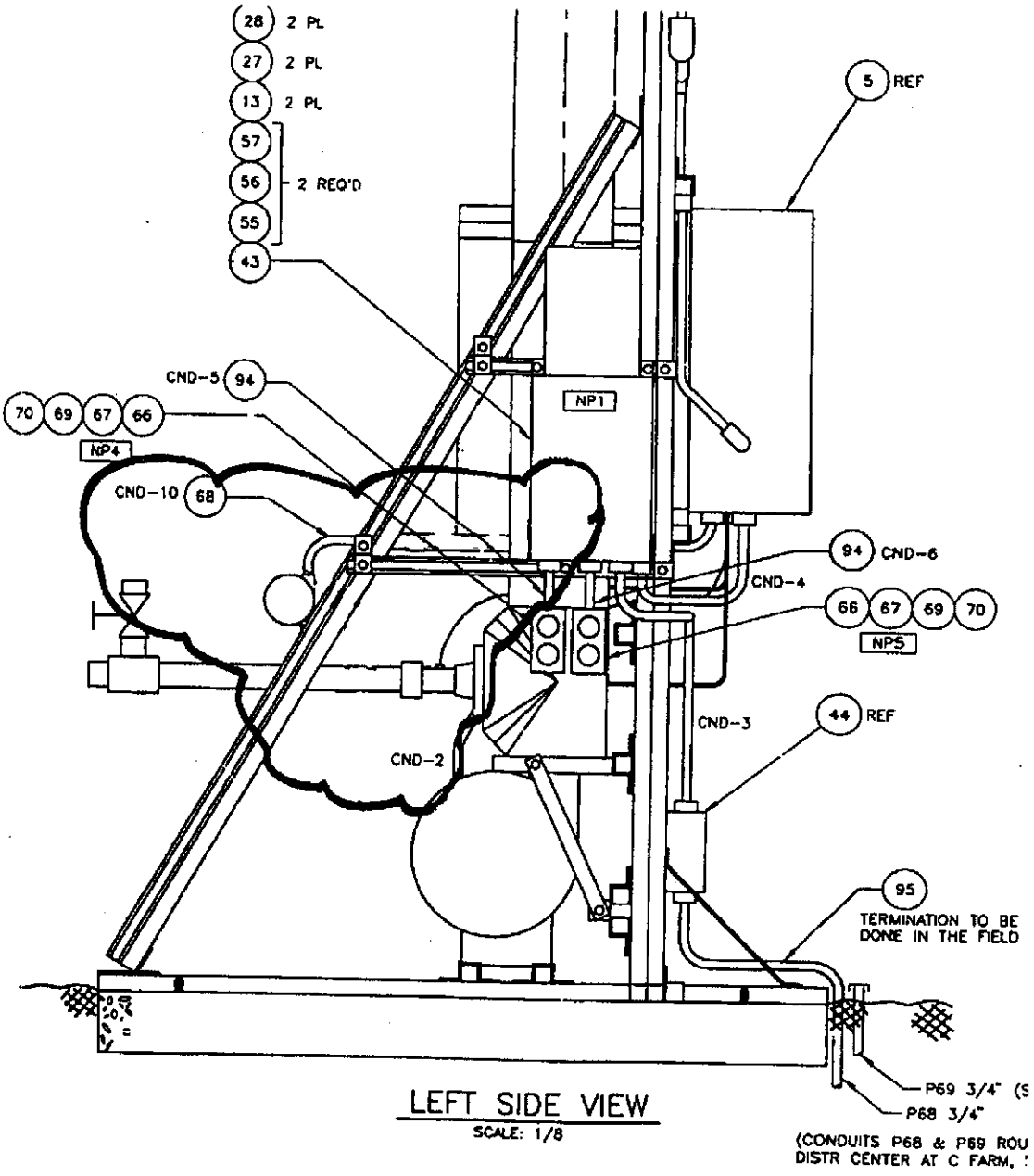

LEFT SIDE VIEW

SCALE: 1/8

RMIS Viewprint Document Cover Sheet

This document was retrieved from the Records Management Information System (RMIS). It is intended for information only and may not be the most recent or updated version.

Accession #: **D9011127**

Document #: **ECN-671764**

Title/Desc:
SUPPL DWG CHANGE TO REFLECT DESIGN BASIS FOR REMOVAL & DELETION OF C103 TANK VAPOR MIXING SYS & PIPING & ELEC COMPONENTS

Pages: **21**

ENGINEERING CHANGE NOTICE

S

Page 1 of 21

1. ECN 671764

Proj. ECN

2. ECN Category (mark one)	3. Originator's Name, Organization, MSIN, and Telephone No.	4. USQ Required?	5. Date
Supplemental ◉ Direct Revision ○ Change ECN ○ Temporary ○ Standby ○ Supersedure ◉ Cancel/Void ○	Jeffrey A Edwards, CHG/LATA, R3-85, 376-4179	◉ Yes ○ No	03/19/02
	6. Project Title/No./Work Order No. Remove vapor mixing system-VMS from waste tank 241-C-103.	7. Bldg./Sys./Fac. No. 241-C tank farm	8. Approval Designator E,S,Q
	9. Document Numbers Changed by this ECN (includes sheet no. and rev.) See ~~Block 13a~~ PAGE # 03/20/02	10. Related ECN No(s). NA ~~See Block 13a~~ 03/25/02	11. Related PO No. NONE
12a. Modification Work ◉ Yes (fill out Blk. 12b) ○ No (NA Blks. 12b, 12c, 12d)	12b. Work Package No. 2W-02-00404	12c. Modification Work Completed Design Authority/Cog. Engineer Signature & Date	12d. Restored to Original Condition (Temp. or Standby ECNs only) N/A Design Authority/Cog. Engineer Signature & Date

13a. Description of Change — 13b. Design Baseline Document? ◉ Yes ○ No

The 241-C tank farm vapor mixing system-VMS is currently inactive, electrically isolated, and abandoned in place. This ECN provides the design basis for removal and deletion of the C-103 tank VMS, piping, and electical components.

~~A USQD is required.~~ 03/20/02

USQD# TF-02-0290, R.0, Review of ECN-671764; Removal of the 241-C-103 tank farm Vapor Mixing System-VMS, piping and electrical components. ~~MD Kippes 03/19/02.~~ 03/25/02

Related ECNs: #615580, #620758, and #620763. #607233L #705247.

~~This ECN supercedes: #620758, and #620763~~ 03/20/02

14a. Justification (mark one)	14b. Justification Details
Criteria Change ○ Design Improvement ○ Environmental ○ Facility Deactivation ◉ As-Found ○ Facilitate Const. ○ Const. Error/Omission ○ Design Error/Omission ○	ECNs are required to provide direction and requirements for disconnected and abandoned C-103 VMS removal. Design verification performed via ~~informal~~ DISCIPLINE 03/25/02 review per IP-0842, Vol. IV, Sect. 4.24 and documented via signatures on page 2 of this ECN. This modification will not change collective dose since it has no impact on the radiological sources, contamination control or shielding.

15. Distribution (include name, MSIN, and no. of copies)

BF ZUROFF	S7-24, 1	DB PARKMAN	S5-13, 1
~~GM LEWIS~~ 03/25/02	~~R3-86, 1~~	KR DUNN	T4-08, 1
MJ SUTEY	T4-07, 1	RG LEE	T4-08, 1
JJ VERDERBER	T4-07, 1	RL MATTHEWS	S6-18, 1
SR STALEY	T4-08, 1	RD FREEMAN	B1-44, 1
JS CONRAD	T4-08, 1	JA EDWARDS	R3-85, 1
CR REICHMUTH	T4-01, 1		
RE HEATH	T4-08, 1		
JB ROBERTS	T4-08, 1		

RELEASE STAMP

DATE: APR 02 2002 HANFORD RELEASE STA: 4 ID: 2

ENGINEERING CHANGE NOTICE

Page 2 of 21 ~~23~~ @03/21/02

1. ECN (use no. from pg. 1): 671764

16. Design Verification Required	17. Cost Impact		18. Schedule Impact (days)
	ENGINEERING	CONSTRUCTION	
● Yes	Additional ○ $ N/A	Additional ○ $ N/A	Improvement ○ N/A
○ No	Savings ○ $	Savings ○ $	Delay ○

19. Change Impact Review: Indicate the related documents (other than the engineering documents identified on Side 1) that will be affected by the change described in Block 13. Enter the affected document number in Block 20.

SDD/DD	☐	Seismic/Stress Analysis	☐	Tank Calibration Manual	☐
Functional Design Criteria	☐	Stress/Design Report	☐	Health Physics Procedure	☐
Operating Specification	☐	Interface Control Drawing	☐	Spares Multiple Unit Listing	☐
Criticality Specification	☐	Calibration Procedure	☐	Test Procedures/Specification	☐
Conceptual Design Report	☐	Installation Procedure	☐	Component Index	☐
Equipment Spec.	☐	Maintenance Procedure	☐	ASME Coded Item	☐
Const. Spec.	☐	Engineering Procedure	☐	Human Factor Consideration	☐
Procurement Spec.	☐	Operating Instruction	☐	Computer Software	☐
Vendor Information	☐	Operating Procedure	☐	Electric Circuit Schedule	☐
OM Manual	☐	Operational Safety Requirement	☐	ICRS Procedure	☐
FSAR/SAR	☒	IEFD Drawing	☐	Process Control Manual/Plan	☐
Safety Equipment List	☐	Cell Arrangement Drawing	☐	Process Flow Chart	☐
Radiation Work Permit	☐	Essential Material Specification	☐	Purchase Requisition	☐
Environmental Impact Statement	☐	Fac. Proc. Samp. Schedule	☐	Tickler File	☐
Environmental Report	☐	Inspection Plan	☐		☐
Environmental Permit	☐	Inventory Adjustment Request	☐		☐

20. Other Affected Documents: (NOTE: Documents listed below will not be revised by this ECN.) Signatures below indicate that the signing organization has been notified of other affected documents listed below.

Document Number/Revision	Document Number/Revision	Document Number/Revision
NONE	NONE	NONE

21. Approvals

	Signature	Date		Signature	Date
Design Authority BF Zuroff	[signature]	3/21/02	Design Agent JA Edwards	[signature]	03/20/02
Cog. Eng. ~~CM Lewis~~	D.B. Parkman	3/28/02	PE		
Cog. Mgr. MJ Sutey	[signature]	3/28/02	QA		
QA JJ Verderber	[signature]	3/25/02	Safety		
Safety SR Staley	SR Staley	03/21/02	Design		
Environ. JS Conrad	[signature]	4/1/02	Environ.		
Other			Other		
Sys Eng Mech. ~~RE Heath~~	[signature]	3/25/02			
Sys Eng Elect. JB Roberts	[signature]	3/21/02			
FAC. MANGR. ~~Fac Sys Eng~~ CR Reichmuth	[signature]	3/25/02	DEPARTMENT OF ENERGY		
FAC. SYS. ENG. ~~Fac Manager~~ DB Parkman	D.B. Parkman	3/28/02	Signature or a Control Number that tracks the Approval Signature		
RadCon. KR Dunn	Kenneth R. Dunn	3/21/02			
			ADDITIONAL		

A-7900-013-3 (10/97)

ENGINEERING CHANGE NOTICE CONTINUATION SHEET	Page 3 of 21	ECN	671764
		Date	03/19/02

Detailed drawing changes are as follows:

On drawing H-2-73957, R.3, SH.1: Vapor sample skid for tank C-103 is no longer in use and being removed from the C-farm. Revise to remove the 3/4" conduits (P68 and P69) from the conduit run, and vapor mixing system from the drawing.

~~On drawing H-2-73948, R.11, SH.1; Revise to 'spare' breaker B6 as the power supply for the vapor mixing system skid.~~
DWG SUPERCEDED BY H-14-030013, SH.1, R.2 04/02/02

On drawing H-2-73957, R.3, SH.1; Revise to remove the 3/4" C, RGS conduits (P68 and P69), and JBX-1 (may be labeled as VTP-JBX-1301) from the drawing.

On drawing H-14-030013, R.2, SH.1; Remove 'Vapor Mixing System' equipment from breaker B6 and mark as 'spare'.

On drawing H-14-030013, R.0, SH.4; Revise to remove EDS-DP-1301, 241-C Distribution Center, BKR B6, Located on Vapor Mixing System Skid at Tank C-103 from the drawing.

On drawing H-14-030013, R.2, SH.6; Void this drawing in its entirety.

On drawing H-14-030113, R.1, SH.1; Void this drawing in its entirety.

On drawing H-14-100292, R.0, SH.1; Void this drawing in its entirety.

On drawing H-14-100293, R.0, SH.1; Void this drawing in its entirety.

On drawing H-14-100293, R.0, SH.2; Void this drawing in its entirety.

On drawing H-2-73957, R.3, SH.1, Zones (E-F1-2); Revise to delete the connection from the Distribution Center and conduits P68 and P69 from the drawing.

On drawing H-14-100290, R.0, SH.1; Void entire drawing.

On drawing H-14-100290, R.0, SH.2; Void entire drawing.

On drawing H-14-100290, R.0, SH.3; Void this drawing in its entirety.

On drawing H-2-90718, R.1, SH.7; Delete from drawing, Items #92-95, 97-102, 106-108 & 113, VMS from installation drawing and note. Revise to show HEPA breather filter typical configuration as per ECN-710524.

On drawing H-14-100290, R.0, SH.4; Void this drawing in its entirety.

On drawing H-14-100290, R.0, SH.5; Void this drawing in its entirety.

ENGINEERING CHANGE NOTICE CONTINUATION SHEET	Page 4 of 21	ECN 671764
		Date 03/19/02

ECN-671764 241-C-103 Vapor Mixing System removal work instructions:

04/02/02 (JE)
1) ~~H-2-73948 SH.1 and~~ H-14-030013 SH.1: At the existing distribution cntr (ref H-2-73957) breaker B6 should already be 'open.' If not, open breaker B6. Identify wires and designators at load side of breaker B6. Verify zero voltage at the load side terminals.

04/02/02 (JE)
2) ~~H-2-73948 SH.1 and~~ H-14-030013 SH.1: Tag breaker B6 as 'spare'.

3) Unbolt the VMS as found on drawings H-14-100290, SH.2 thru SH.5, and drawing H-2-90718, SH.7 from the concrete slab to remove for disposal.

4) All anchor bolts and tie-down bolts will be removed, or flush-cut on the concrete slab after the VMS has been removed from the concrete slab as found on drawings H-14-100290, SH.2 thru SH.5, and H-2-90718, SH.7. The concrete slab detail is found on H-14-100291, SH.1. The concrete slab will not be removed.

ENGINEERING CHANGE NOTICE CONTINUATION SHEET Page 5 of 21	ECN 671764
	Date 03/19/02

IS: H-2-73957, R.3, SH.1, Zone C5

SHOULD BE: Equipment being removed from the tank farm. Remove the 3/4" conduits P68 and P69 (spare), and the vapor mixing system (future) from the drawing.

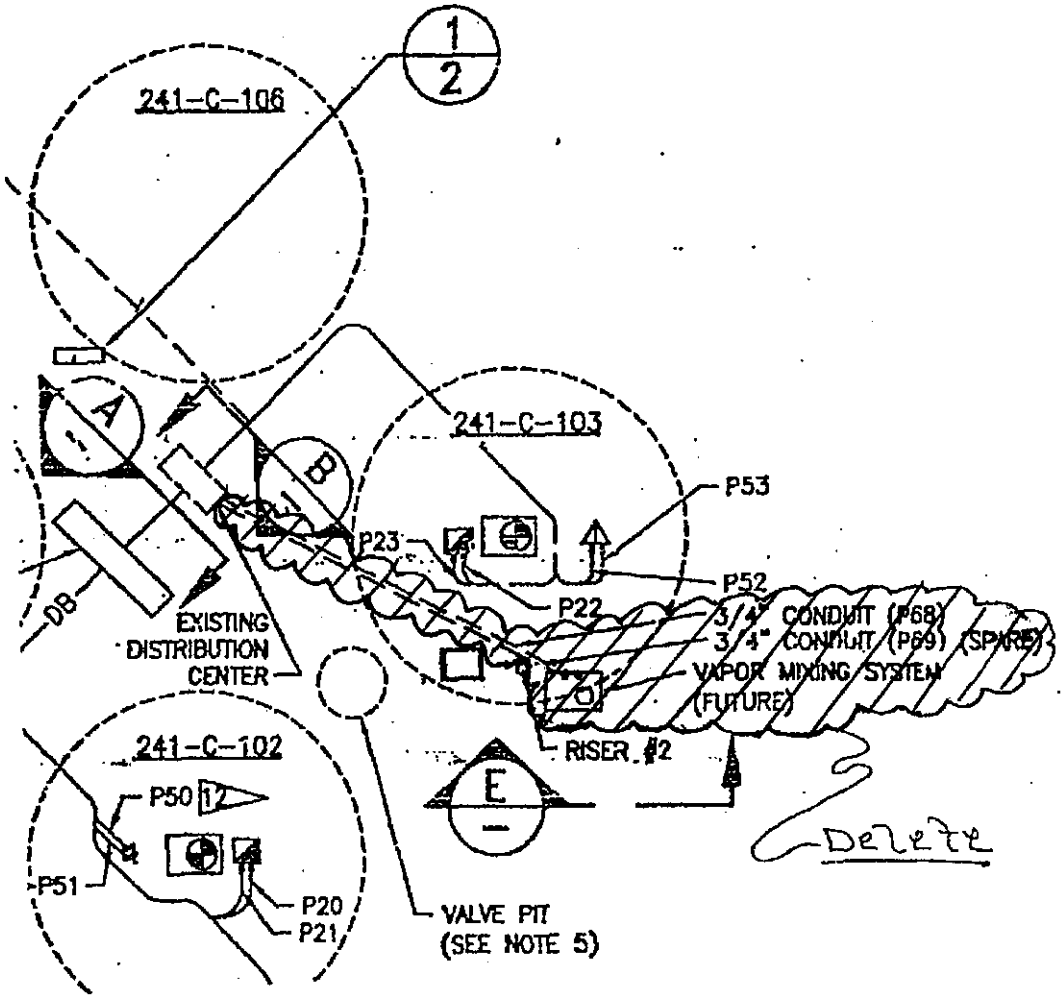

ENGINEERING CHANGE NOTICE CONTINUATION SHEET	ECN: 671764
Page 6 of 21	Date: 03/19/02

IS: H-2-73948, Sht. 1, Rev. 11 *DWG SUPERCEDED BY H-14-030013, R.2, SH.1 FOR INFORMATION PURPOSES ONLY! 04/02/02

SHOULD BE: Equipment being removed from the tank farm. Delete this equipment from this drawing.

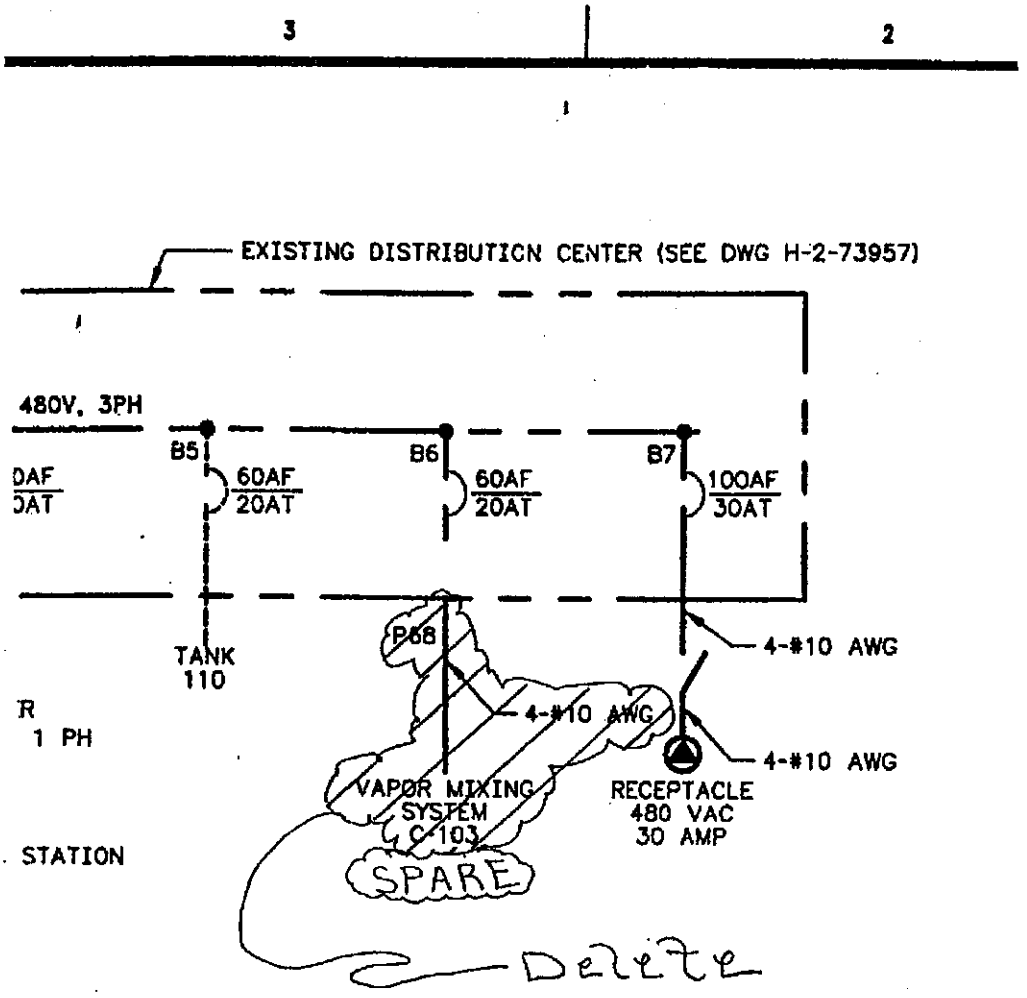

ENGINEERING CHANGE NOTICE CONTINUATION SHEET	Page 7 of 21	ECN	671764
		Date	03/19/02

IS: H-2-73957, R.3, SH.1, Zone B3

SHOULD BE: Equipment being removed from the tank farm. Remove the 3/4" C, RGS conduits P68 and P69, and the JBX-1 from the drawing.

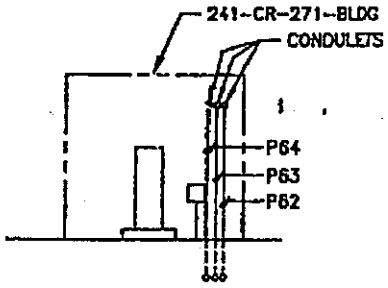

D ELEVATION
SCALE: NONE

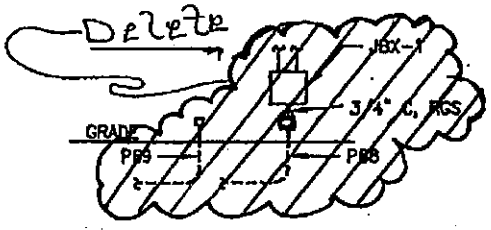

E ELEVATION
SCALE: NONE

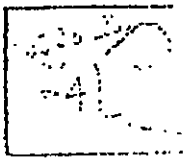

ENGINEERING CHANGE NOTICE CONTINUATION SHEET	ECN: 671764
Page 8 of 21	Date: 03/19/02

IS: H-14-030013, Sht. 1, Rev. 2

SHOULD BE: Equipment being removed from the tank farm. Delete equipment from the drawing.

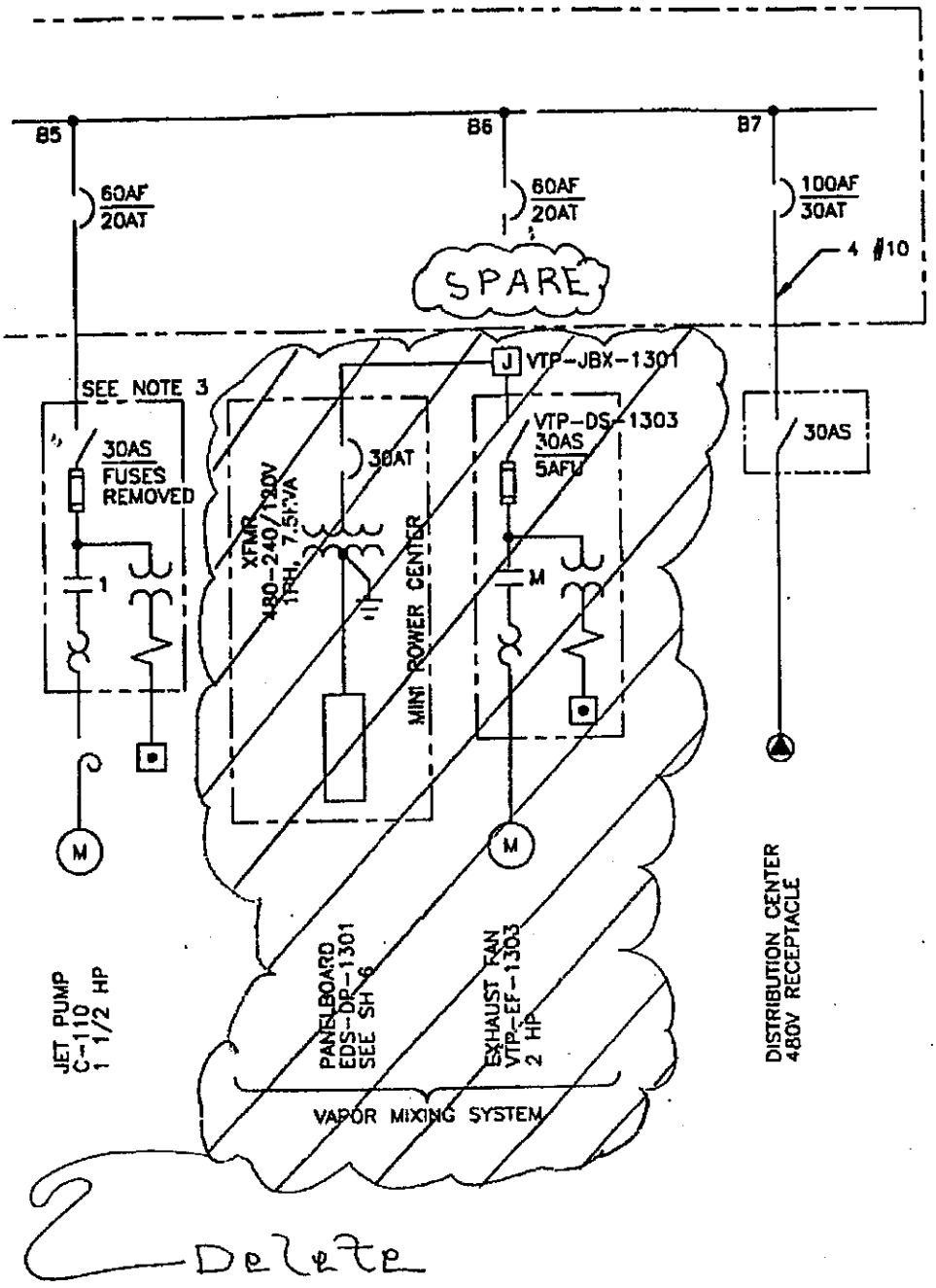

ENGINEERING CHANGE NOTICE CONTINUATION SHEET	Page 9 of 21	ECN	671764
		Date	03/19/02

IS: H-14-030013, R.0, SH.4.

SHOULD BE: Delete from drawing, EDS-DP-1301, 241-C Distribution Center, BKR B6, Located on Vapor Mixing System Skid at Tank C-103.

IS:

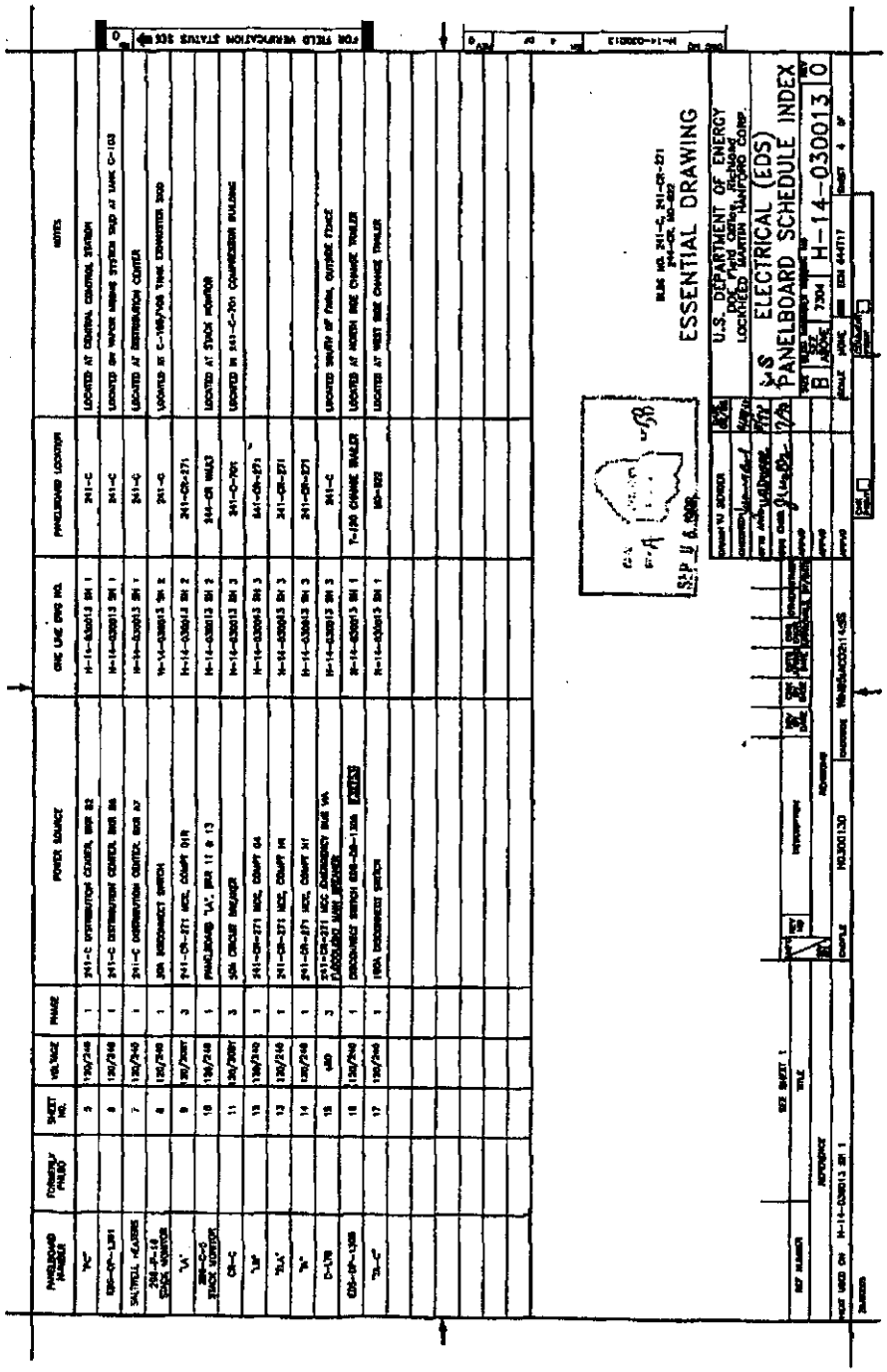

SHOULD BE:

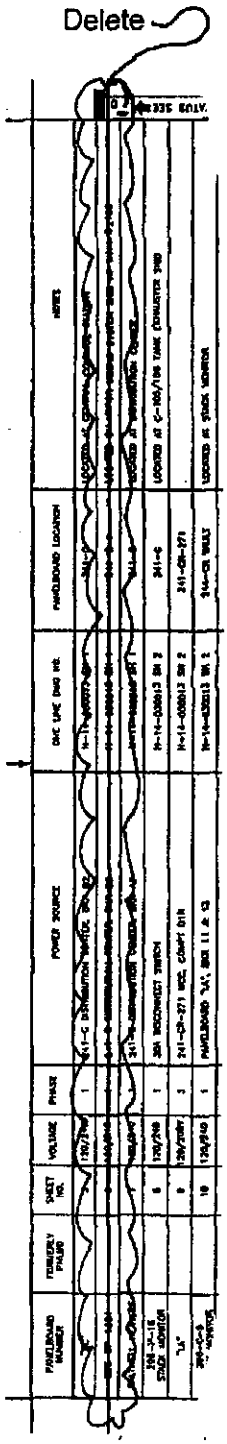

ENGINEERING CHANGE NOTICE CONTINUATION SHEET	ECN: 671764
Page 10 of 21	Date: 03/19/02

IS: H-14-030113, Sht. 1, Rev. 1

SHOULD BE: Void this dwg. in its entirety.

ONTROL ELEMENTARY DIAGRAM

GENERAL NOTES: (UNLESS OTHERWISE SPECIFIED)

1. ELECTRICAL INSTALLATION SHALL BE IN ACCORDANCE WITH NATIONAL ELECTRIC CODE-1993.
2. A TYPED DIRECTORY CARD SHALL BE INSTALLED IN PANELBOARD "EDS-DP-1301" AND SHALL ACCURATELY REFLECT THE FACILITY ELECTRICAL INSTALLATION.
3. POWER CONDUCTORS SHALL BE STRANDED COPPER, WITH TYPE THWN/THHN INSULATION PER THE WIRE RUN LIST.
4. ALL ELECTRICAL EQUIPMENT SHALL BE GROUNDED IN ACCORDANCE WITH NEC-1993 ARTICLE 250.

Void this dwg in its entirety

DRAWN	R. PARSONS	5/30/95
CHECKED	SEE REV.0	5/30/95
DTS APVD	SEE REV.0	5/31/95
CDS ENGR	J. WELLS	
APPVD	SEE REV.0	6/5/95
APPVD		
APPVD		
APPVD		
APPVD		
APPVD		

U.S. DEPARTMENT OF ENERGY
DOE Field Office, Richland
Westinghouse Hanford Company

VENTILATION TANK
PRIMARY SYS
ELECTRICAL DIAG

SIZE	BLDG NO	INDEX NO	DWG NO	REV
F	241-C	7302.7502	H-14-030113	1

SCALE NONE | SHEET 1 OF 1

-622814. BAM 5/00

REVISIONS

DWG NO H-14-030113 SH 1 OF 1 REV 0

ENGINEERING CHANGE NOTICE CONTINUATION SHEET	ECN: 671764
Page 11 of 21	Date: 03/19/02

IS: H-14-100292, Sht. 1, Rev. 0

SHOULD BE: Void this dwg. in its entirety.

GENERAL NOTES: (UNLESS OTHERWISE SPECIFIED)

1. ELECTRICAL INSTALLATION SHALL BE IN ACCORDANCE WITH NATIONAL ELECTRIC CODE-1993.
2. POWER CONDUCTORS SHALL BE COPPER STRANDED, WITH TYPE THWN/THHN INSULATION PER THE WIRE RUN LIST.
3. ALL ELECTRICAL EQUIPMENT SHALL BE GROUNDED IN ACCORDANCE WITH NEC-1993 ARTICLE 250.
4. WIRE TERMINATIONS SHALL BE MADE USING AN UL APPROVED, PRESSURE TYPE SOLDERLESS LUG. LUGS SHALL BE INSTALLED ACCORDING TO THE MANUFACTURER'S INSTRUCTIONS USING THE PROPER TOOL FOR THE SPECIFIED LUG.
5. ALL PIECES OF EQUIPMENT IDENTIFIED SHALL BE PREFIXED WITH "VTP".

Void this dwg. in its entirety.

H-14-100292 | 1 | 1 | 0

DRAWN R. PARSONS	U.S. DEPARTMENT OF ENERGY DOE Field Office, Richland Westinghouse Hanford Company
DOE Engr J WELLS	VAPOR MIXING SYSTEM CONNECTION DIAG
SIZE F · SLDG NO 241-C · DWG NO 7307, 7502 · DWG NO H-14-100292 · REV 0	
SCALE NONE · SHEET 1 OF 1	

DE HPUX90M102615N

ENGINEERING CHANGE NOTICE CONTINUATION SHEET	ECN: 671764
Page 12 of 21	Date: 03/19/02

IS: H-14-100293, Sht. 1, Rev. 0

SHOULD BE: Void this dwg. in its entirety.

						SCREW. PAN HEAD 1/4-20-UNC-2A X 1/2"	ANY GRADE		41
				AR		WIRE. COPPER 14 AWG STRANDED. WITH TYPE THHN INSULATION.	ANY GRADE		42
				AR		WIRE. COPPER 12 AWG STRANDED. WITH TYPE THHN INSULATION.	ANY GRADE		43
			6			SCREW. PAN HEAD #8-32-UNC-2A X 3/8"	ANY GRADE		44
			4			SPACER. HEX MALE/FEMALE #8-32	ANY GRADE		45
			2			SCREW. PAN HEAD #6-32 UNC-2A X 1/2"	ANY GRADE		46
				AR	R511	GASKET 5/16 X 1"	FROST KING		47
			.	4	SR-503	HUB. 1/2". STRAIN RELIEF	O-Z / GEDNEY		48
			5		SS-400-3-4TMT	ADAPTER TEE. 1/4" TUBE TO 1/4" NPT	SWAGELOK		49

FOR CONTINUATION SEE ZONE F4

Void this dwg. in its entirety.

REV 0 | SHT 1 OF 2 | DWG NO H-14-100293

M

DRAWN BJ MESSINGER	DATE 3/20/95	U.S. DEPARTMENT OF ENERGY DOE Field Office, Richland Westinghouse Hanford Company
CHECKED	6-5-95	
OFFICE APPVD	6-19-95	VAPOR MIXING SYSTEM CONTROL PANEL ASSEMBLY
COG ENGR S. PERCE		
APPVD	6-7-95	
APPVD		
APPVD		
APPVD		
APPVD		
APPVD		

REV BY DATE | CHK BY DATE | DES'G APVD DATE | COG ENGR | OTHER | OTHER | MANUFACTURING DATE

REVISIONS

CADCODE HPUX 9 0 H 1 0 2 6 1 SN

SIZE F | BLDG NO 241-C | INDEX NO 7501 | DWG NO H-14-100293 | REV 0

SCALE 3" = 1'-0" | EDT 607836 | SHEET 1 OF 2

2 | DWG PRINT 0 DATE __/__/__ | CONFORM PRINT 0 DATE __/__/__ | 1

A

ENGINEERING CHANGE NOTICE CONTINUATION SHEET	ECN: 671764
Page 13 of 21	Date: 03/19/02

IS: H-14-100293, Sht. 2, Rev. 0

SHOULD BE: Void this dwg. in its entirety.

FOR GENERAL NOTES, PARTS LIST AND REFERENCE DRAWINGS SEE SHEET 1.

Void this dwg. in its entirety.

H-14-100293 SH 2 OF REV 0

U.S. DEPARTMENT OF ENERGY
DOE Field Office, Richland
Westinghouse Hanford Company

VAPOR MIXING SYSTEM
CONTROL PANEL
DETAILS

DRAWN BA MESSINGER 3/20/95
DOE ENGR S. PIERCE
SIZE F | BLDG NO 241-C | DWG NO H-14-100293 | REV 0
SCALE SHOWN | SHEET 2 OF
CODE HPUX 3.0 M102 B 1.SN
DATE 5/11/95

ENGINEERING CHANGE NOTICE CONTINUATION SHEET	Page 14 of 21	ECN	671764
		Date	03/19/02

IS: H-2-73957, R.3, SH.1, Zones (E-F1-2).

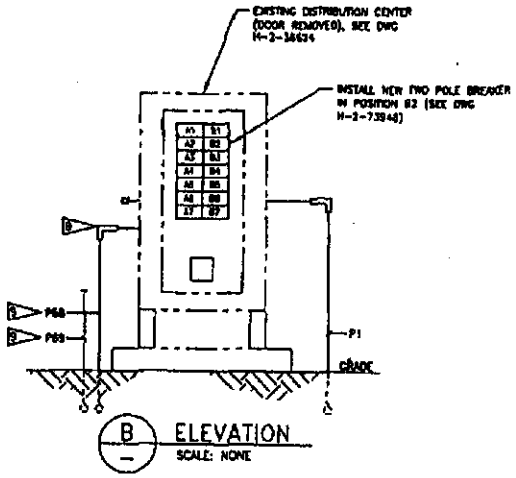

SHOULD BE: DELETION OF H-2-73957, R.3, SH.1, Zones (E-F1-2); Revise to delete the conduits P68 and P69 connected to the Existing Distribution Center from the drawing.

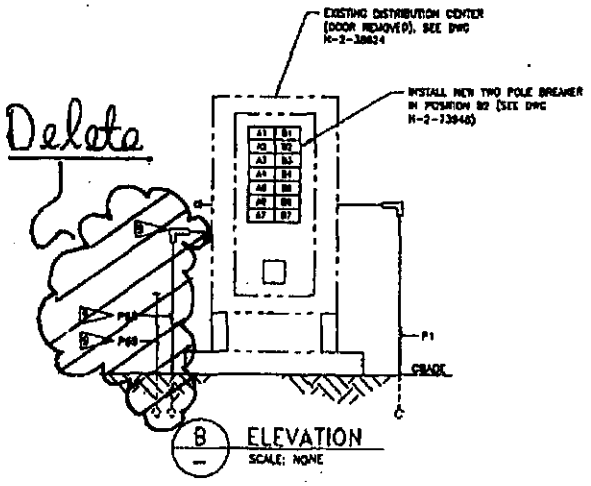

ENGINEERING CHANGE NOTICE CONTINUATION SHEET Page 15 of 21	ECN 671764
	Date 03/19/02

IS: H-14-100290, R.0, SH.1. VOID entire drawing.

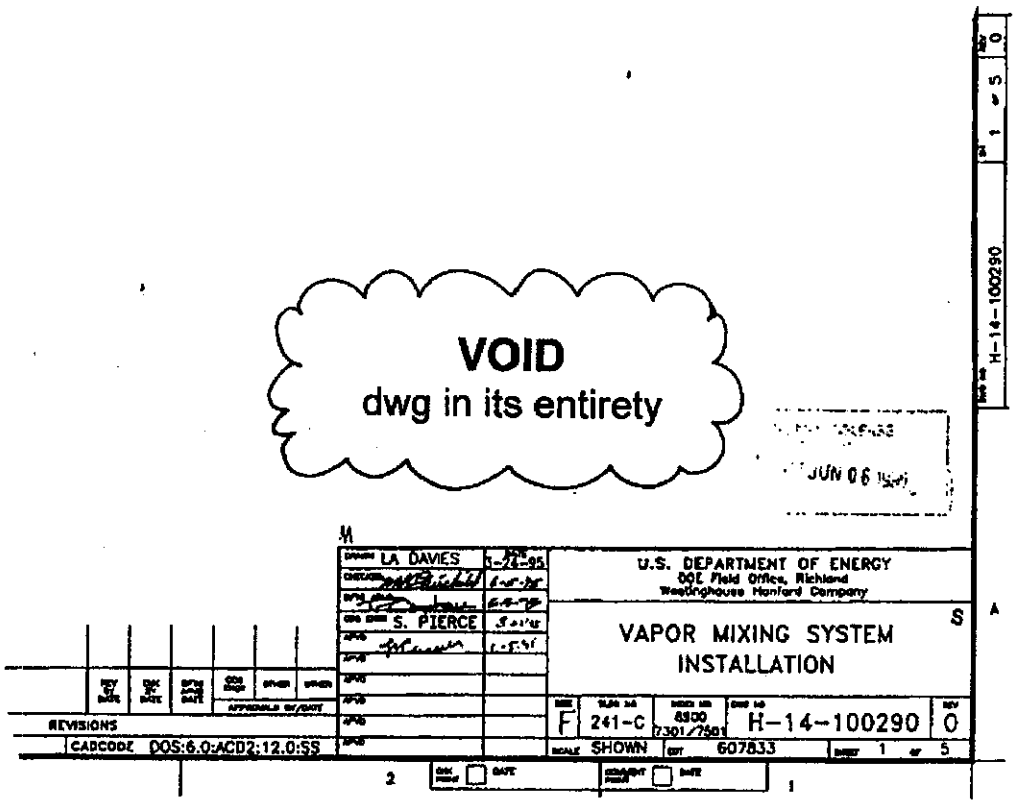

ENGINEERING CHANGE NOTICE CONTINUATION SHEET	Page 16 of 21	ECN	671764
		Date	03/19/02

IS: H-14-100290, R.0, SH.2; VOID entire drawing.

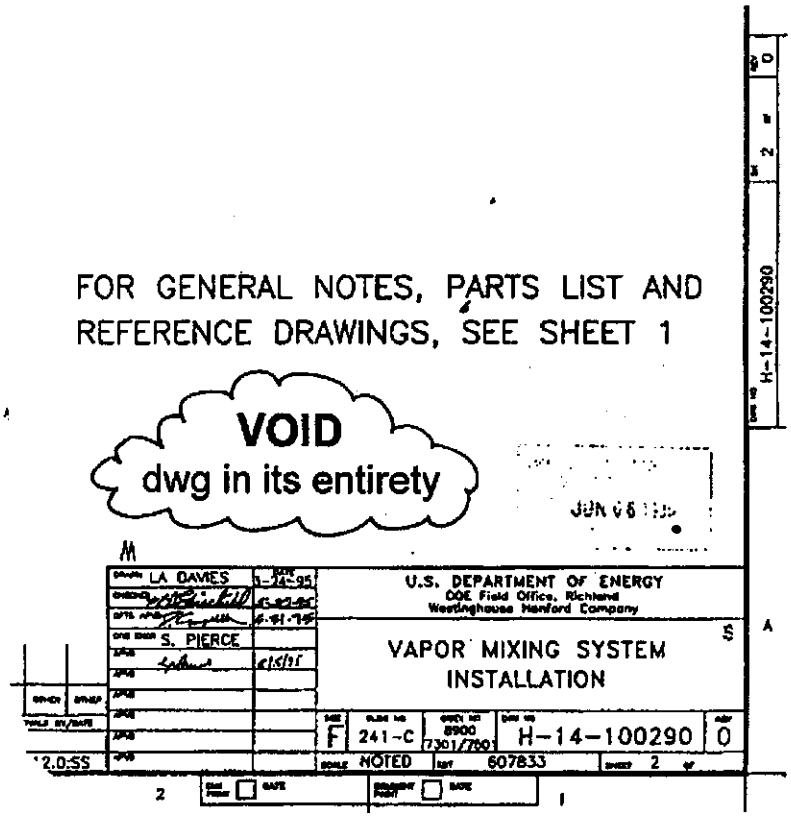

ENGINEERING CHANGE NOTICE CONTINUATION SHEET	Page 17 of 21	ECN	671764
		Date	03/19/02

IS: H-14-100290, R.0, SH.3; VOID entire drawing.

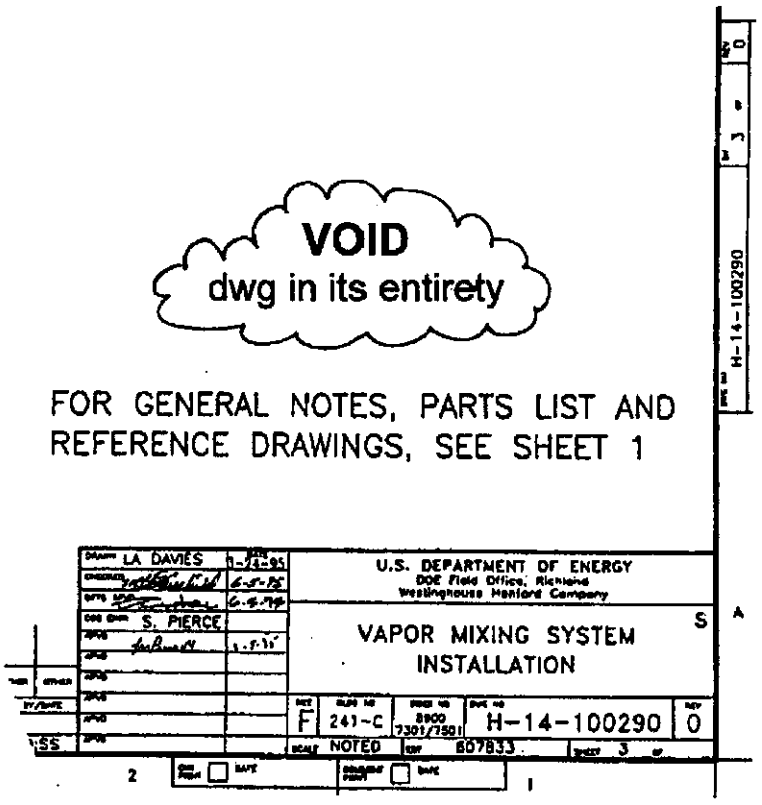

ENGINEERING CHANGE NOTICE CONTINUATION SHEET	Page 18 of 21	ECN	671764
		Date	03/19/02

IS: H-2-90718, R.1, SH.7, Zones (D-F1-8).

SHOULD BE: Delete from drawing, Items ~~#92~~ 93 -95, 97-102, 106-108, & 113 in the PartsList/Material List on this drawing and the VMS from the drawing and the installation note. 03/20/02

IS:

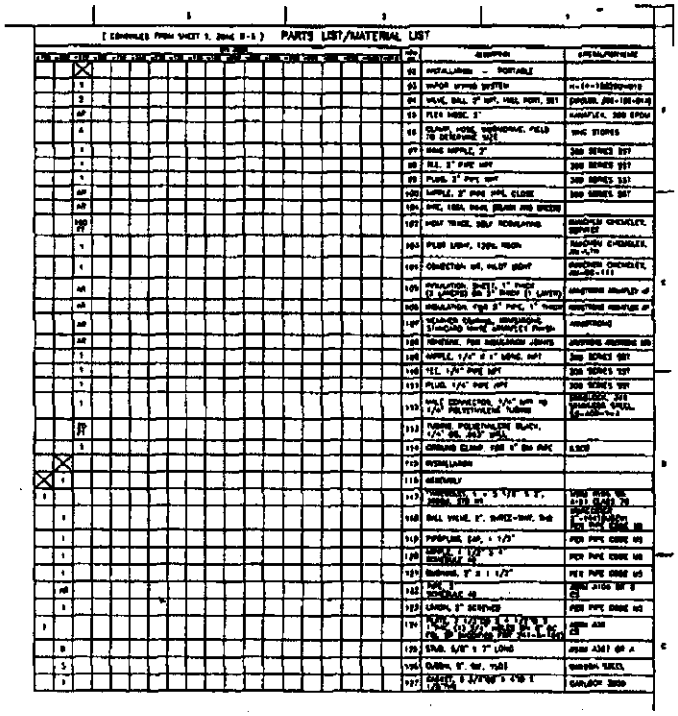

SHOULD BE:

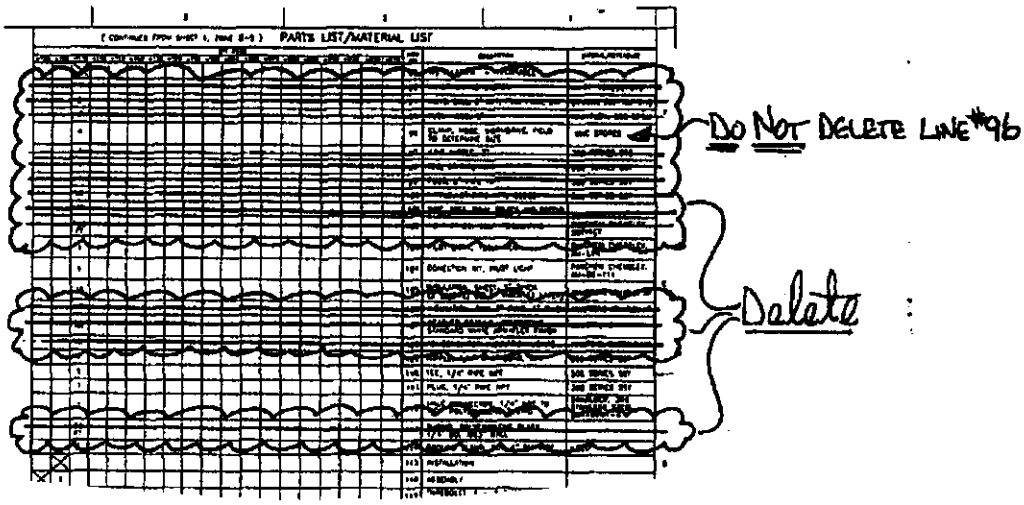

ENGINEERING CHANGE NOTICE CONTINUATION SHEET	Page 19 of 21	ECN	671764
		Date	03/19/02

IS: H-2-90718, R.1, SH.7, Zone (D-F4-8).

SHOULD BE: As shown in ECN-710524 on drawing H-2-90718, R.1, SD.7 revise as follows: convert breather filter to typical configuration (SHOULD BE) and delete the vapor mixing system from the drawing. Delete Item numbers 93-95, 97-102, 106-108 & 113 in the Parts List/Material List on this drawing.

IS:

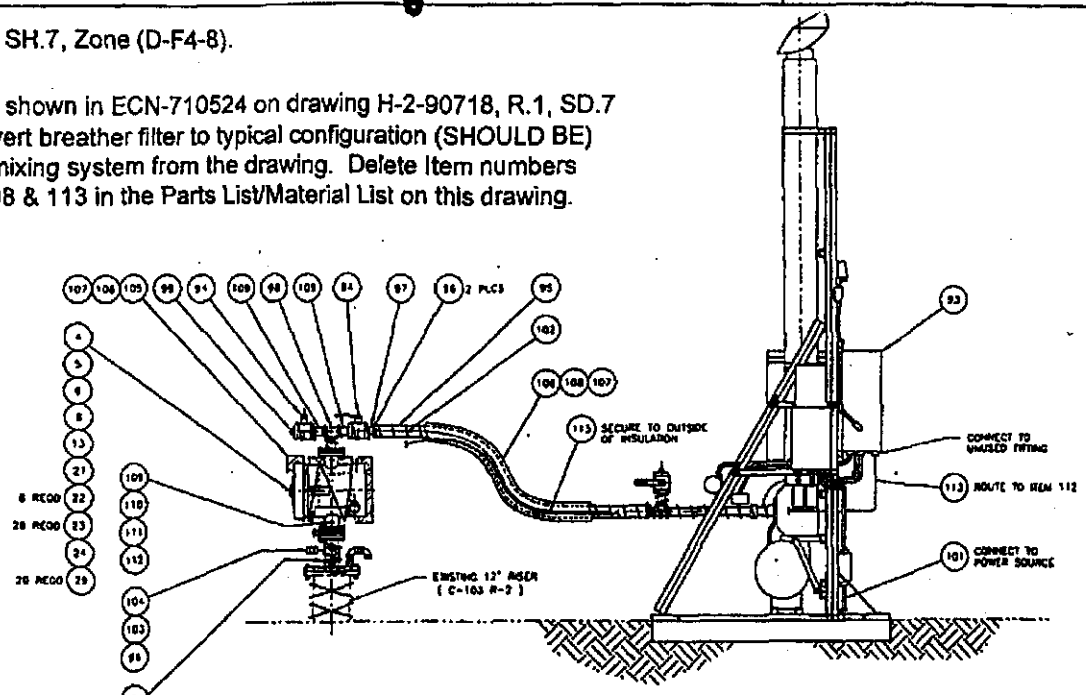

SHOULD BE:

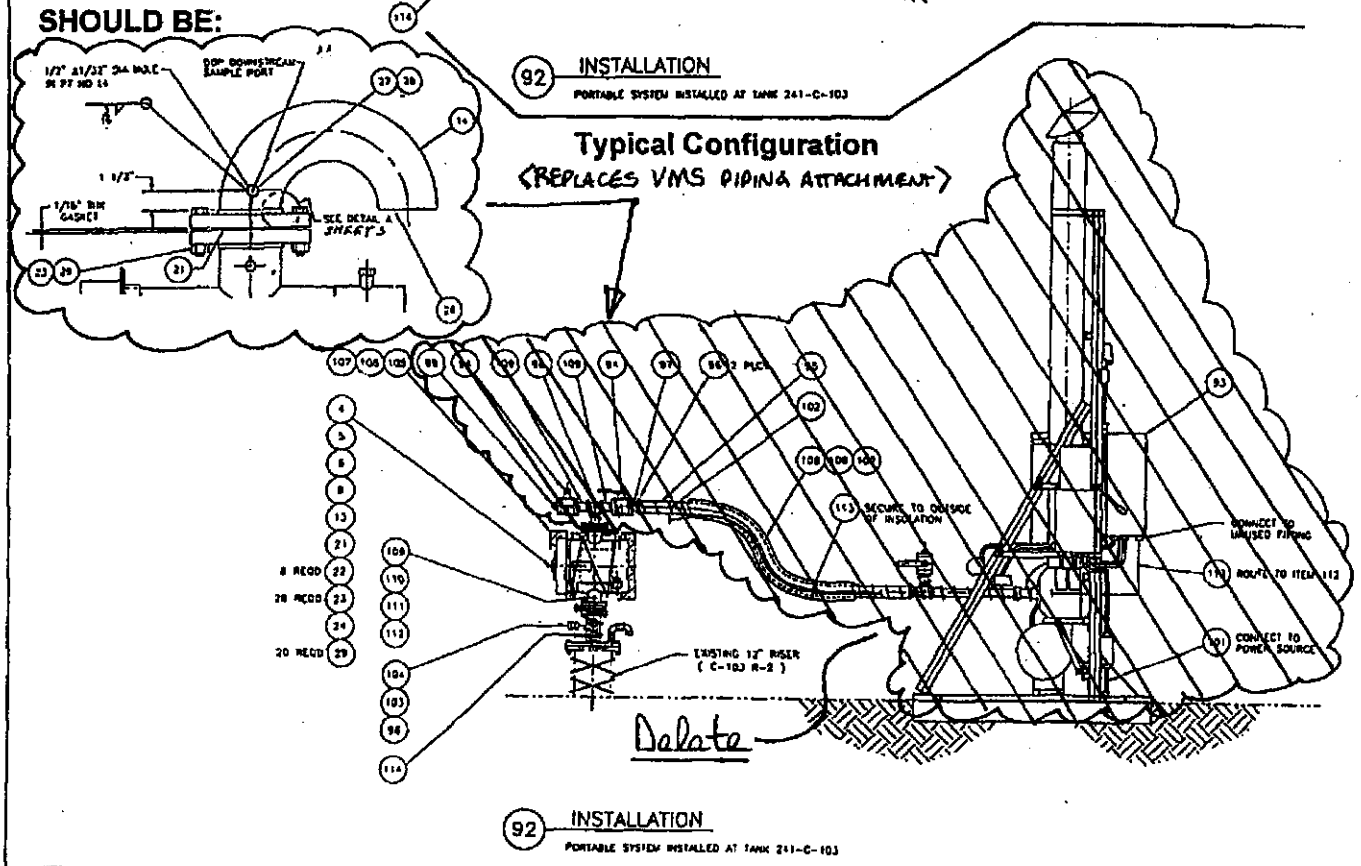

The new drawing will show ONLY the HEPA filter assembly attached to Riser #2 on tank C-103.
Drafting Note: The breather filter has been modified per ECN-710524.

ENGINEERING CHANGE NOTICE CONTINUATION SHEET	Page 20 of 21	ECN 671764
		Date 03/19/02

IS: H-14-100290, R.0, SH.4; VOID entire drawing.

VOID
dwg in its entirety

FOR GENERAL NOTES, PARTS LIST AND REFERENCE DRAWINGS, SEE SHEET 1

LA DAVIES	1-21-95	U.S. DEPARTMENT OF ENERGY DOE Field Office, Richland Westinghouse Hanford Company
S. PIERCE		VAPOR MIXING SYSTEM INSTALLATION
		F 241-C 8900 H-14-100290 0
		SCALE 1/8 607833 4

A S

2 1

ENGINEERING CHANGE NOTICE CONTINUATION SHEET	Page 21 of 21	ECN 671764
		Date 03/19/02

IS: H-14-100290, R.0, SH.5; VOID entire drawing.

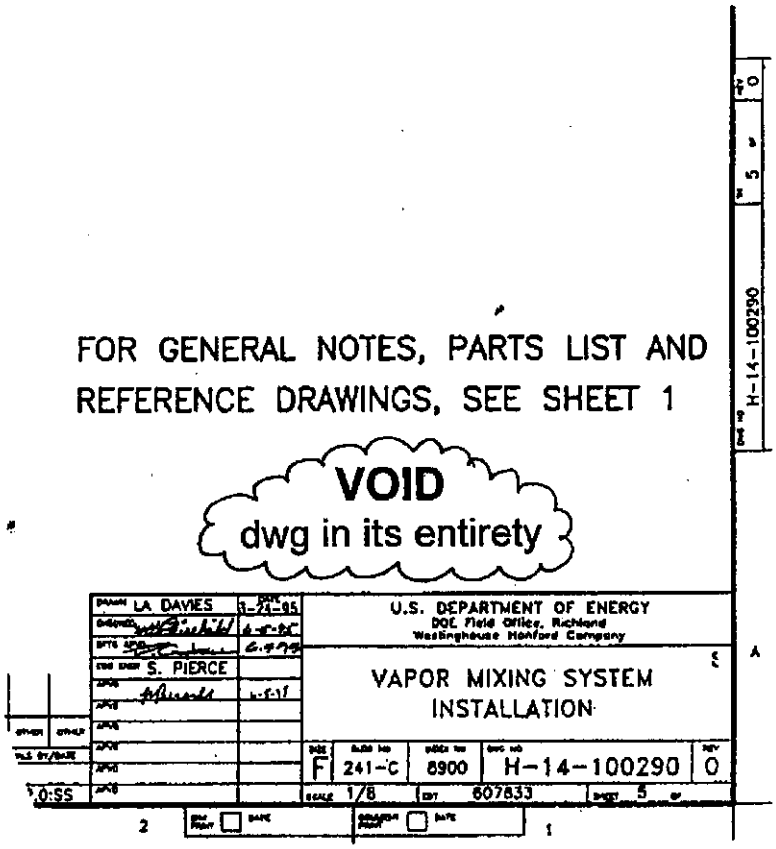

04-ENG-367

Filter (A-Train) Leak Test	7/17/2002	0.067	Fail the test	
Filter	7/22/2002	0.025	Replaced HEGA and Pass the test	When it wasP >= 0.05 for Pass
A-Train) Halide Test	10/22/2002	0.442	Fail the test	
HEGA Filter	11/12/2002	0.0244	Replaced HEGA and Pass the test	
3 HEGA Filter (A-Train) Halide Test	2/27/2003	0.043	Pass the test	
3 HEGA Filter (A-Train) Halide Test	6/18/2003	0.48	Fail the test	
G HEGA Filter (A-Train)	7/10/2003	0.03983	Replaced HEGA and Pass the test	
: (A-Train)	10/17/2003	0.61	Fail the test	
HEGA Filter	11/12/2003	0.01982	Replaced HEGA and Pass the test	
HEGA, A-Train Leak Test	2/12/2004	0.042	Pass the test	
3-Train) in Place Leak test	6/19/2002	0.1	Fail the test	
Test	7/9/2002	0.1	Replaced HEGA and Fail the test, install second HEGA (on 7-17-02) and pass the test with 0.01	When it wasP >= 0.05 for Pass
				When it wasP >= 0.05 for Pass
lter (B-Train) Leak Test	11/12/2002	0.376	Fail the test	
HEGA Filter	12/10/2002	0.013	Replaced HEGA and Pass the test	
in) HEGA Filter Test	3/12/2003	0.66	Fail the test	
ilter &Test	4/1/2003	0.034	Replaced HEGA and Pass the test	
lter (B-Train) Test	7/10/2003	0.17381	Fail the test	
HEGA Filter & Test	7/23/2003	0.041	Replaced HEGA and Pass the test	
lter Halide Test	1/13/2004	0.42	Fail the test	
HEGA Filter	2/12/2004	0.014	Replaced HEGA and Pass the test	

A-158

RPP-22171 Rev 0

RPP-22171 Rev 0

2E-02-614	A	241-AY/AZ Tank HEGA Filter (A-Train) Leak Test	7/17/2002	0.067	Fail the test
2E-02-716	A	Replace A-Train HEGA Filter	7/22/2002	0.025	Replaced HEGA and Pass the test
2E-02-702	A	241-AY/AZ HEGA Filter (A-Train) Halide Test	10/22/2002	0.442	Fail the test
2E-02-1140	A	Replace 702-AZ A-Train HEGA Filter	11/12/2002	0.0244	Replaced HEGA and Pass the test
2E-03-069	A	241-AY/AZ TK 702 BLDG HEGA Filter (A-Train) Halide Test	2/27/2003	0.043	Pass the test
2E-03-595	A	241-AY/AZ TK 702 BLDG HEGA Filter (A-Train) Halide Test	6/16/2003	0.48	Fail the test
2E-03-60	A	Replace AY/AZ 702 BLDG HEGA Filter (A-Train)	7/10/2003	0.03983	Replaced HEGA and Pass the test
2E-03-1315	A	702-AZ HEGA Filter Test (A-Train)	10/17/2003	0.61	Fail the test
2E-03-1511	A	702-AZ Replace A-Train HEGA Filter	11/12/2003	0.01982	Replaced HEGA and Pass the test
2E-03-1694	A	241-AZ Tank Exhauster HEGA, A-Train Leak Test	2/12/2004	0.042	Pass the test
2E-02-606	B	241-AY/AZ HEGA Filter (B-Train) In Place Leak test	6/19/2002	0.1	Fail the test
2E-02-717	B	Replace B-Train HEGA &Test	7/9/2002	0.1	Replaced HEGA and Fail the test, install second HEGA (on 7-17-02) and pass the test with 0.01
2E-02-1621	B	241-AY/AZ Tank HEGA Filter (B-Train) Leak Test	11/12/2002	0.376	Fail the test
2E-02-1141	B	Replace 702-AZ B-Train HEGA Filter	12/10/2002	0.013	Replaced HEGA and Pass the test
2E-03-165	B	241-AZ 702 BLDG (B-Train) HEGA Filter Test	3/12/2003	0.66	Fail the test
2E-03-191	B	Replace B-Train HEGA Filter &Test	4/1/2003	0.034	Replaced HEGA and Pass the test
2E-03-875	B	241-AY/AZ Tank HEGA Filter (B-Train) Test	7/10/2003	0.17381	Fail the test
2E-03-1039	B	702-AZ Replace B-Train HEGA Filter & Test	7/23/2003	0.041	Replaced HEGA and Pass the test
2E-03-1692	B	241-AY/AZ Tank HEGA Filter Halide Test	1/13/2004	0.42	Fail the test
2E-04-190	B	702-AZ Replace B-Train HEGA Filter	2/12/2004	0.014	Replaced HEGA and Pass the test

A-159