18 STA 3 JUL 28 2003

ENGINEERING DATA TRANSMITTAL

Page 1 of 1

1. EDT 636316

2. To: (Receiving Organization) DISTRIBUTION	3. From: (Originating Organization) Retrieval/Closure Sys Engineering	4. Related EDT No.: NA
5. Proj./Prog./Dept./Div.: C-106 WASTE RETRIEVAL	6. Design Authority/Design Agent/Cog. Engr.: GP JANICEK	7. Purchase Order No.: NA
8. Originator Remarks: Initial Revision Release RPP-17385, Rev. 0, C-106 Acid Dissolution Transfer Pump Comparative Structural Calculation		9. Equip./Component No.: NA
		10. System/Bldg./Facility: 241-C
		12. Major Assm. Dwg. No.: NA
11. Receiver Remarks:	11A. Design Baseline Document? ☒ Yes ☐ No	13. Permit/Permit Application No.: NA
		14. Required Response Date: NA

15. DATA TRANSMITTED

(A) Item No.	(B) Document/Drawing No.	(C) Sheet No.	(D) Rev. No.	(E) Title or Description of Data Transmitted	(F) Approval Designator	(G) Reason for Transmittal	(H) Originator Disposition	(I) Receiver Disposition
1	RPP-17385	ALL	0	C-106 Acid Dissolution	NA	2	1	
				Transfer Pump Comparative				
				Structural Calculation				

16. KEY

Approval Designator (F)	Reason for Transmittal (G)		Disposition (H) & (I)	
E, S, Q, D OR N/A (See WHC-CM-3-5, Sec. 12.7)	1. Approval 2. Release 3. Information	4. Review 5. Post-Review 6. Dist. (Receipt Acknow. Required)	1. Approved 2. Approved w/comment 3. Disapproved w/comment	4. Reviewed no/comment 5. Reviewed w/comment 6. Receipt acknowledged

17. SIGNATURE/DISTRIBUTION (See Approval Designator for required signatures)

(G) Reason	(H) Disp.	(J) Name	(K) Signature	(L) Date	(M) MSIN	(G) Reason	(H) Disp.	(J) Name	(K) Signature	(L) Date	(M) MSIN
1	1	Design Authority GP JANICEK			57-12	1	1	PM DORSH		7/24/03	57-24
1	1	Design Agent SS PAULSEN		7/24/03	57-24	1	1	JR BELLOMY		7/25/03	57-24
1	1	Cog. Eng. J.R. Bellomy		7/28/03		1	1	J.G. Propson			57-90
1	1	Cog. Mgr. WT THOMPSON	per Telecon	7/28/03							
		QA									
		Safety									
		Env.									

18.	19.	20.	21. DOE APPROVAL (if required)
SS Paulsen 7/24/03 Signature of EDT Originator — Date	Authorized Representative for Receiving Organization — Date	GP JANICEK 7/28/03 Design Authority/ Cognizant Manager — Date	Ctrl No. ____ ☐ Approved ☐ Approved w/comments ☐ Disapproved w/comments

BD-7400-172-2 (10/97) BD-7400-172-1

C-106 Acid Dissolution Transfer Pump Comparative Structural Calculation

Sam Paulsen
Los Alamos Technical Assotiates, Inc.
Richland, WA 99352
U.S. Department of Energy Contract DE-AC06-96RL13200

EDT/ECN: 636316 UC: N/A
Org Code: CP54/76500 Charge Code: 501555
B&R Code: N/A Total Pages: 28

Key Words: C-106, WRS, C-106 Waste Retrieval System, Structural Calc

Abstract: The replacement waste transfer pump that may be utilized in C-106 Waste Retrieval for Acid Dissolution is analyzed for its structural integrity. The pump is very similar to H-14-104773 and therefore the structural calculation, RPP-14445, Rev. 0, is utilized to analyze the replacement pump.

TRADEMARK DISCLAIMER. Reference herein to any specific commercial product, process, or service by trade name, trademark, manufacturer, or otherwise, does not necessarily constitute or imply its endorsement, recommendation, or favoring by the United States Government or any agency thereof or its contractors or subcontractors.

Printed in the United States of America. To obtain copies of this document, contact: Document Control Services, P.O. Box 950, Mailstop H6-08, Richland WA 99352, Phone (509) 372-2420; Fax (509) 376-4989.

Barbara Wolski 7/28/03
Release Approval Date

JUL 28 2003
DATE:
STA: 3
HANFORD RELEASE
18
Release Stamp

Approved For Public Release

Calculation Review Checklist.

Calculation Reviewed: C-106 Acid Dissolution Transfer Pump Comparative Structural Calculation
Scope of Review: Entire Calculation and Write-up
(e.g., document section or portion of calculation)

Engineer/Analyst: Sam Paulsen [signature] Date: 7/24/03

Organizational Mgr: ~~Mike Sutey~~ J. Prapson [signature] for W Thompson per telecom Date: 7/26/03

This document consists of 6 pages and the following attachments (if applicable):

Attachment A: Miscellaneous Reference Materials and Sketches (7 pages)

Attachment B: Exerpt from Mechanics of Materials, Gere and Tomishenko (4 pages)

Attachment C: Excerpt from RPP-14445, Rev. 0 (8 pages)

Yes	No	NA*		
[X]	[ ]	[ ]	1.	Analytical and technical approaches and results are reasonable and appropriate.
[X]	[ ]	[ ]	2.	Necessary assumptions are reasonable, explicitly stated, and supported.
[X]	[ ]	[ ]	3.	Ensure calculations that use software include a paper printout, microfiche, CD ROM, or other electronic file of the input data and identification to the computer codes and versions used, or provide alternate documentation to uniquely and clearly identify the exact coding and execution process.
[X]	[ ]	[ ]	4.	Input data were checked for consistency with original source information.
[X]	[ ]	[ ]	5.	For both qualitative and quantitative data, uncertainties are recognized and discussed.
[X]	[ ]	[ ]	6.	Mathematical derivations were checked including dimensional consistency of results.
[X]	[ ]	[ ]	7.	Calculations are sufficiently detailed such that a technically qualified person can understand the analysis without requiring outside information.
[X]	[ ]	[ ]	8.	Software verification and validation are addressed adequately.
[X]	[ ]	[ ]	9.	Limits/criteria/guidelines applied to the analysis results are appropriate and referenced. Limits/criteria/guidelines were checked against references.
[X]	[ ]	[ ]	10.	Conclusions are consistent with analytical results and applicable limits.
[X]	[ ]	[ ]	11.	Results and conclusions address all points in the purpose.
[X]	[ ]	[ ]	12.	Referenced documents are retrievable or otherwise available.
[X]	[ ]	[ ]	13.	The version or revision of each reference is cited.
[X]	[ ]	[ ]	14.	The document was prepared in accordance with Attachment A, "Calculation Format and Preparation Instructions."
[X]	[ ]	[ ]	15.	All checker comments have been dispositioned and the design media matches the calculations.

PAUL H. DORSH [signature] Date: 7/24/03
Checker (Printed Name and Signature)

* If No or NA is chosen, an explanation must be provided on or attached to this form.

ANALYTICAL CALCULATIONS

Subject: C-106 Acid Dissolution Transfer Pump Comparative Structural Calculation **Identifier:** C-08-13

Originator: Sam Paulsen Date: 7/24/03

Checker: Paul Dorsh Date: 7/24/03

Table of Contents

Section	Description	Page
1.0	Purpose	1
2.0	Method of Analysis	1
3.0	Input Data	1
4.0	Use of Computer Software	1
5.0	Results	1
6.0	Conclusions/ Recommendations	1
7.0	References	2
8.0	Calculations	2
8.1	System Weight and Center of Gravity Calculatoins	2
8.2	Hoisting Reaction Determination and Stress Calculation	4
8.3	Lifting Instructions	6

Attachments	Description	Pages
Att. A	Miscellaneous Reference Materials and Sketches	A1-A7
Att. B	Excerpt from *Mechanics of Materials*, Gere and Tomishenko	B1-B4
Att. C	Excerpt from RPP-14445, Rev. 0	C1-C8

Title: C-106 Acid Dissolution Transfer Pump Comparative Structural Calculation Identifier: C-08-13
Originator: Sam Paulsen Date: 7/24/03
Checker: Paul Dorsh Date: 7/24/03

1.0 Purpose

The waste in Tank 241-C-106 is to be transferred to a DST to support Waste Retrieval and Accelerated Closure of the tank. Liquid waste was removed in Phase 1 of this retrieval via the Supernate Removal Pump, H-14-104773. The next phase of waste retrieval is Acid Dissolution of the tank.

In the event that the current Supernate Removal Pump (Flygt Pump Assembly, H-14-104773) is incapable of transferring acidic waste from C-106 to AN-106 it will have to be replaced. The replacement pump (an assembly containing one Gorman-Rupp Pump) is very similar to the pump described by H-14-104773. The pump was specified in RPP-16266 and vendor information will be located in CVI-50385 upon receipt of the pump assembly from the vendor. This calculation compares the replacement pump assembly to the C-106 Supernate Removal Pump Assembly and the structural calculation performed on that pump in RPP-14445, Rev. 0 (See Attachment C). Also, the recommended lifting configuration is defined.

2.0 Method of Analysis

The weight and center of gravity of the replacement assembly is determined. The weight distribution is compared to the weight of the pump described by H-14-104773. The loading associated with the two assemblies are compared as well.

3.0 Input Data

The C-106 Supernate Removal Pump is described by H-14-104773 and was analyzed for structural integrity in RPP-14445. The replacement pump is basically the same assembly with the 10" SCH 40 shroud cut a bit shorter, only one Gorman-Rupp pump is used as opposed to 2 Tandem Flygt Pumps, and the Gorman-Rupp Pump is attached via a flexhose. See Attachment A, page 2 and 3 for sketches of the replacement pump.

4.0 Use of Computer Software

Mathcad was used for these calculations. All calculations are checked and verified using a handheld calculator. Mathcad™ is a registered trademark of Mathsoft, Inc. One Kendall Square, Cambridge, Massachusetts.

5.0 Results

Sec	Description	Result	Allowable	DR
8.1	Design Weight (Excluding Cradle)	4067 lbf	-	-
8.1	Estimated CG from Top of Main Plate (Including Cradle)	14.2 ft	-	-
8.2	Maximum Stress	6197 psi	23100 psi	3.7

6.0 Conclusions/ Recommendations

The replacement pump assembly described herein will remain structurally sound when lifted from horizontal with two cranes. It is a requirement that a cradle or similar device be used to hold the Gorman-Rupp Pump during the lift (Att. A, pg. 6). The pump shall only be lifted horizontally from the two hoist rings located directly on the main plate. Do not lift from the horizontal using the hoist rings located on top of the structural tubing (see RPP-14445 for further explanation).

7.0 References

American Institute of Steel Construction, 1991, *Manual of Steel Construction, Allowable Stress Design*, 9th Edition, Chicago, IL

Avallone and Baumeister, 1996, *Marks' Standard Handbook for Mechanical Engineers*, 10th Edition, McGraw Hill, New York, NY

CVI-50385, 2003, *C-106 Acid Pump Assembly and Mixer Pump Assembly*, CH2M Hill Hanford Group, Richland, WA

ECN-720290-R0, 2003, *C-106 Retrieval Supernate Removal Pump Assembly Modification*, CH2M Hill Hanford Group, Richland, WA

Gere and Timoshenko, 1997, *Mechanics of Materials*, 4th Edition, PWS Publishing Company, Boston MA

H-14-104773, Sheets 1-4, 2003, *C-106 Retrieval Supernate Removal Pump Assy and Details*, U.S. Dept. of Energy, Richland, WA

RPP-14445, 2003, *Structural Analysis of C-106 Supernate Removal Pump*, Rev. 0, CH2M Hill Hanford Group, Richland, WA

RPP-16266, 2003, *Specification for 241-C-106, Acid Dissolution Pump Assembly*, Rev. 1, CH2M Hill Hanford Group, Richland, WA

RPP-8360, 2002, *Lifting Point Evaluation Process*, Rev. 2, CH2M Hill Hanford Group, Richland, WA

Shigley and Mischke, 1989, *Mechanical Engineering Design*, Fifth Edition, McGraw-Hill New York, NY

TFC-ENG-DESIGN-C-10, 2003, *Engineering Calculations*, Rev. A, CH2M Hill Hanford Group Inc., Richland, WA

8.0 Calculations

An approximation of the weight and center of gravity for the pump assembly is determined. The weight for the replacement pump assembly is then compared to the weight distribution of the pump assembly described by H-14-104773. Once the comparative analysis is complete, lifting instructions are discussed.

8.1 System Weight and Center of Gravity Calculation

Representative Sketch of System
Refer to RPP-14445 page 5 for similar Sketch, Factors, and Weights of Flygt Pump Assembly

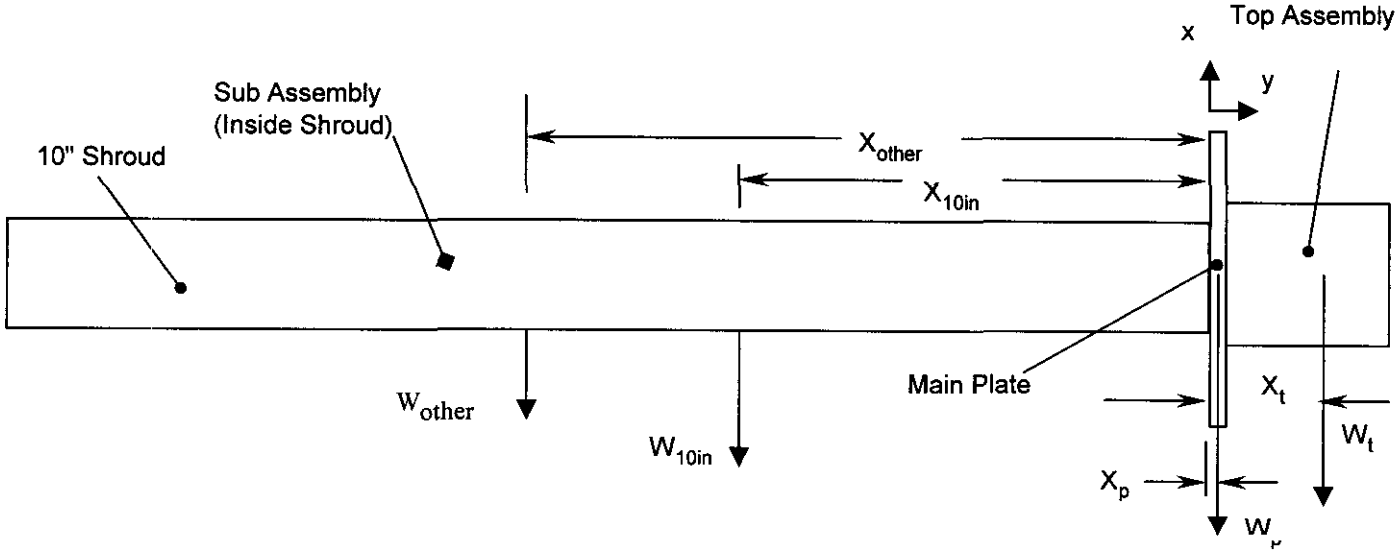

$\eta_\omega := 1.5$ Factor of Safety Multiplier for Weight, for conservatism.

$\rho_{st} := .282 \cdot \frac{lbf}{in^3}$ Density of Steel (Shigley, pg. 729)

$W_p := \eta_\omega \cdot 521 \cdot lbf$ $W_p = 782\,lbf$ Plate Weight (RPP-14445, pg. 6)

$W_t := \eta_\omega \cdot 314 \cdot lbf$ $W_t = 471\,lbf$ System Above Plate (Top Asm) Weight (RPP-14445, pg. 6)

$W_{10in} := \eta_\omega \cdot \left(40.48 \cdot \frac{lbf}{ft} \cdot 33ft\right)$ $W_{10in} = 2004\,lbf$ 10" SCH 40 Shroud Weight (Mark's Handbook, pg. 8-150 & Att. A, pg. 3)

$W_{3in} := \eta_\omega \cdot 23 \cdot ft \cdot 10.25 \cdot \frac{lbf}{ft}$ $W_{3in} = 354\,lbf$ Weight of 3" SCH 40 Pipe (Mark's Handbook, pg. 8-150)

$W_{sup} := \eta_\omega \cdot 2 \cdot \left[\frac{\pi \cdot (10.02 \cdot in - 3.5 \cdot in)^2}{4} \cdot .25 \cdot in \cdot \rho_{st}\right]$ $W_{sup} = 7\,lbf$ Weight of 3" Pipe Support (Att A, pg. 3)

$W_{flex} := \eta_\omega \cdot 10 \cdot ft \cdot 1.89 \cdot \frac{lbf}{ft}$ $W_{flex} = 28\,lbf$ Weight of 3" Flex Hose (Att A, pg. 3 and 5)

$W_{pump} := \eta_\omega \cdot 281 \cdot lbf$ $W_{pump} = 422\,lbf$ Weight of Gorman Rupp Pump (Att. A, pg. 4)

Major Component Weight

$W'_T := W_p + W_t + W_{10in} + W_{3in} + W_{sup} + W_{flex} + W_{pump}$ $\boxed{W'_T = 4067\,lbf}$ Summed Weight of Major Components

The Centers of Gravity are given for the major components.

$Y_p := .5 \cdot in$ CG_y in the y-direction of the Main Plate (RPP-14445, pg 6)

$Y_t := 13.9 \cdot in$ CG_y in the y-direction for the Top Asm (RPP-14445, pg 6)

$Y_{10in} := \frac{33 \cdot ft}{2}$ $Y_{10in} = 16.5\,ft$ CG_y in the negative y-direction, of 10" SCH 40 Shroud (Att. A, pg. 3)

$Y_{3in} := \frac{23 \cdot ft}{2}$ $Y_{3in} = 11.5\,ft$ CG_y in negative y-direction of 3" SCH 80 pipe (Att. A, pg. 3)

$Y_{sup} := Y_{3in}$ $Y_{sup} = 11.5\,ft$ Approximate CG_y in negative y-direction of 3" pipe supports

$Y_{pump} := 33 \cdot ft + \frac{3 \cdot ft}{2}$ $Y_{pump} = 34.5\,ft$ CG_y in negative y-direction of Gorman-Rupp Pump (Att. A, pg. 3)

$Y_{flex} := 23 \cdot ft + \frac{10 \cdot ft}{2}$ $Y_{flex} = 28\,ft$ CG_y in negative y-direction of Flex Hose (Att. A, pg. 3)

It is recommended that a cradle be used when lifting the replacement pump assembly from horizontal to restrict movement of the Gorman-Rupp Pump that would otherwise hang freely. An example of a cradle is defined below (see sketch Attachment A, pg. 6).

$W_{cradle} := \eta_{\omega} \cdot 6 \cdot ft \cdot .5 \cdot 53.62 \cdot \frac{lbf}{ft}$ $\quad W_{cradle} = 241\ lbf$ $\quad$ Cradle Design Weight (Mark's pg. 8-150)

The actual cradle length can be smaller than 6 feet, but this is used to allow up to a 6 foot cradle.

$Y_{cradle} := 33 \cdot ft$ $\quad Y_{cradle} = 33\ ft$ $\quad$ Estimated CG_y in negative y-direction of Cradle (Att. A, pg. 3 and 6)

System Estimated CG

$$Y := \frac{W_{cradle} \cdot Y_{cradle} + W_{flex} \cdot Y_{flex} + W_{pump} \cdot Y_{pump} + W_{sup} \cdot Y_{sup} + W_{3in} \cdot Y_{3in} + W_{10in} \cdot Y_{10in} + W_t \cdot Y_t + W_p \cdot Y_p}{W'_T + W_{cradle}}$$

$\boxed{Y = 14.2\ ft}$

8.2 Hoisting Reaction Determination and Stress Calculations

The forces and moments throughout the system, due to horizontal hoisting of the assembly, are determined. During the hoisting operation the pump will be picked from horizontal to vertical by lifting on two hoist rings that are attached to the main plate of the pump assembly. A spreader bar will be utilized for avoidance of the top assembly by the hoisting and rigging apparatus. A second crane will be required to lift on the other end of the pump. A strap will be wrapped around the 10" SCH 40 shroud and cradle. The system is modeled as a simply supported beam at these lifting points (see sketch below).

Sketch of Loaded System

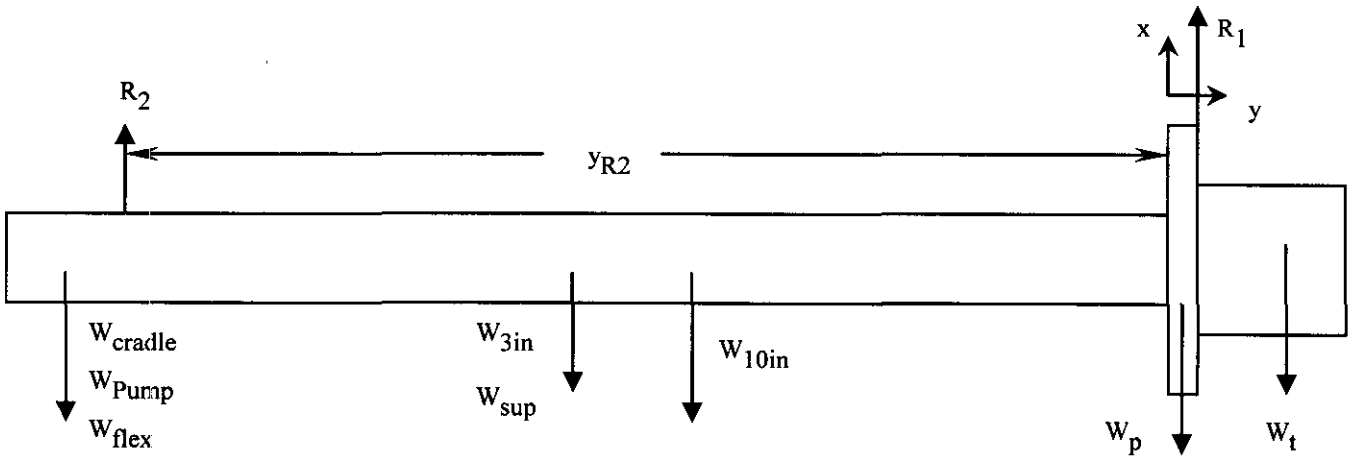

$y_{R2} := 360 \cdot in$ $\quad$ Distance to 2nd Crane (RPP-14445, pg. 7)

The pump, cradle, and flex hose are considered to act at the same center of gravity for simplicity (@ Y_{cradle}). The 3 inch pipe and support are also considered to act at the same point. A simplification of the weights is defined below.

$W_1 := W_{cradle} + W_{pump} + W_{flex}$ $\quad W_1 = 691\ lbf$

$W_2 := W_{3in} + W_{sup}$ $\quad W_2 = 361\ lbf$

Static Determination of Reaction Forces

$\Sigma F_x = 0$ $\quad W_T := W'_T + W_{cradle}$ $\quad W_T = 4308\,lbf$

$R_2 + R_1 = W_T$ $\quad R_2 = W_T - R_1$

$\Sigma M_o = 0$ Moments about the origin, i.e. the bottom of the plate

$$W_1 \cdot Y_{cradle} + R_1 \cdot 1 \cdot in + W_2 \cdot Y_{3in} + W_{10in} \cdot Y_{10in} = R_2 \cdot y_{R2} + W_p \cdot Y_p + W_t \cdot Y_t$$

Substitute Equation from Sum of Forces into Moment equation

$$W_1 \cdot Y_{cradle} + R_1 \cdot 1 \cdot in + W_2 \cdot Y_{3in} + W_{10in} \cdot Y_{10in} = (W_T - R_1) \cdot y_{R2} + W_p \cdot Y_p + W_t \cdot Y_t$$

$$W_1 \cdot Y_{cradle} + R_1 \cdot 1 \cdot in + W_2 \cdot Y_{3in} + W_{10in} \cdot Y_{10in} + R_1 \cdot y_{R2} = W_T \cdot y_{R2} + W_p \cdot Y_p + W_t \cdot Y_t$$

$$R_1 \cdot (1 \cdot in + y_{R2}) + W_1 \cdot Y_{cradle} + W_2 \cdot Y_{3in} + W_{10in} \cdot Y_{10in} = W_T \cdot y_{R2} + W_p \cdot Y_p + W_t \cdot Y_t$$

$$R_1 := \frac{(W_T \cdot y_{R2} + W_p \cdot Y_p + W_t \cdot Y_t) - (W_1 \cdot Y_{cradle} + W_2 \cdot Y_{3in} + W_{10in} \cdot Y_{10in})}{(1 \cdot in + y_{R2})}$$

$R_1 = 2320\,lbf$ Reaction 1 Resultant Force

$R_2 := W_T - R_1$ $\quad R_2 = 1988\,lbf$ Reaction 2 Resultant Force

Shear and Moment Determination

See Attachment A, page 7 for Shear and Moment Diagram. The plate weight is considered to act at the same point as reaction 1 for simplicity. The resultant upward force is:

$R_{up} := R_1 - W_p$ $\quad R_{up} = 1539\,lbf$

From Attachment A page 7 it is clear that the most stress on the assembly is seen at approximately the midpoint of the 10" SCH 40 Shroud. From RPP-14445 it is also apparent that this is the critical analysis point, and is therefore the only stress analysis required.

$V_{max} := 1297 \cdot lbf$ Shear in 10" SCH 40 Pipe (Att. A, pg. 7)

$M_{max} := 15436.5 \cdot lbf \cdot ft$ Maximum Moment in 10" SCH 40 Pipe (Att. A, pg. 7)

Stress Calculation

$A_{10} := 11.90 \cdot in^2$ Cross Sectional Area of 10" SCH 40 pipe (Mark's Handbook, pg. 8-150)

$S_{10} := 29.9 \cdot in^3$ Section Modulus of 10" SCH 40 pipe (Mark's Handbook, pg. 8-150)

$\sigma_v := \frac{V_{max}}{A_{10}}$ $\quad \sigma_v = 109\,psi$ Shear Stress

$\sigma_b := \frac{M_{max}}{S_{10}}$ $\quad \sigma_b = 6195\,psi$ Bending Stress

The pipe is considered a compact section per RPP-14445, pg. 10. The shear stress and bending stress are combined using Mohr's circle to determine the maximum bending stress in the material.

Construct Mohr's Circle (Ref. Mechanics of Materials pg. 492-494, see Att. B pg. 2-4)

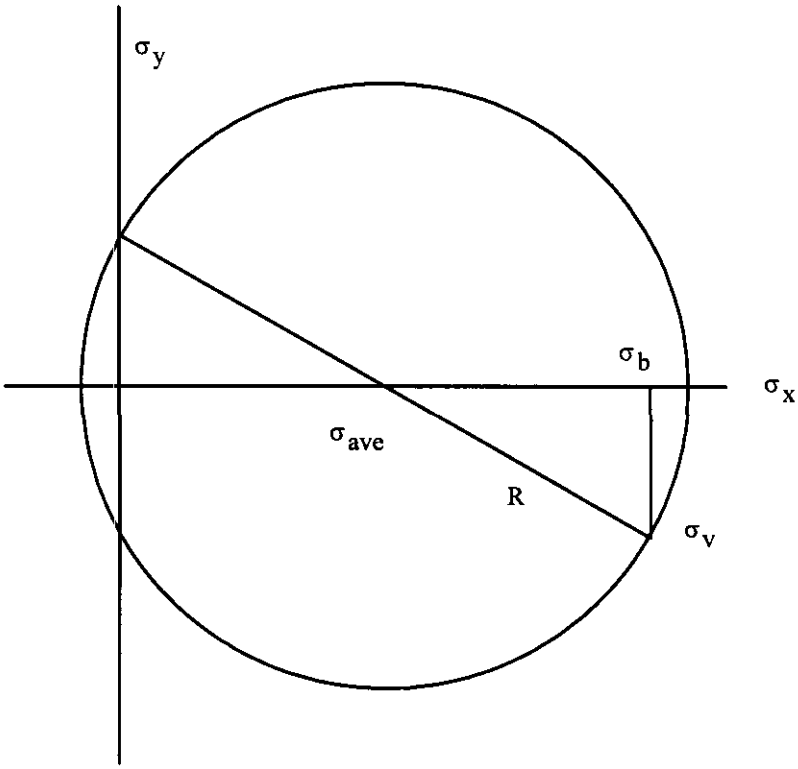

$\sigma_{x1} := \sigma_b$ $\sigma_{x1} = 6195\,psi$

$\sigma_{y1} := 0 \cdot psi$

$\sigma_{ave} := \frac{\sigma_{x1} + \sigma_{y1}}{2}$ $\sigma_{ave} = 3098\,psi$

$R := \sqrt{\left(\frac{\sigma_{x1} - \sigma_{y1}}{2}\right)^2 + \sigma_v^{\,2}}$

$R = 3100\,psi$

$\sigma_{max} := \sigma_{ave} + R$

$\boxed{\sigma_{max} = 6197\,psi}$ Maximum Bending Stress

$f_b := 23100 \cdot psi$ Maximum Allowable Bending Stress (RPP-14445, pg. 10)

$DR := \frac{f_b}{\sigma_{max}}$ $\boxed{DR = 3.7}$ Design Ratio for Bending of replacement pump assembly

The pump will remain structurally sound during horizontal lifting.

8.3 Lifting Instructions

It is recommended that a cradle similar to the one shown in Attachment A, pg. 6 is used during the lifting process. Other characteristics of the lift shall be analogous to that described in Section 8.2 of RPP-14445. (See Attachment C)

Attachment A:

Miscellaneous Reference Materials and Sketches

Description	**Pages**
Sketch of Replacement Pump	A2
Sketch, Comparison of Flygt Pump Asm vs. Gorman-Rupp Pump Asm	A3
Gorman-Rupp Pump Cut Sheet	A4
Example Flexible Hose	A5
Sketch of Lifting Cradle	A6
Shear and Moment Diagram	A7

SKETCH OF REPLACEMENT PUMP CHANGES

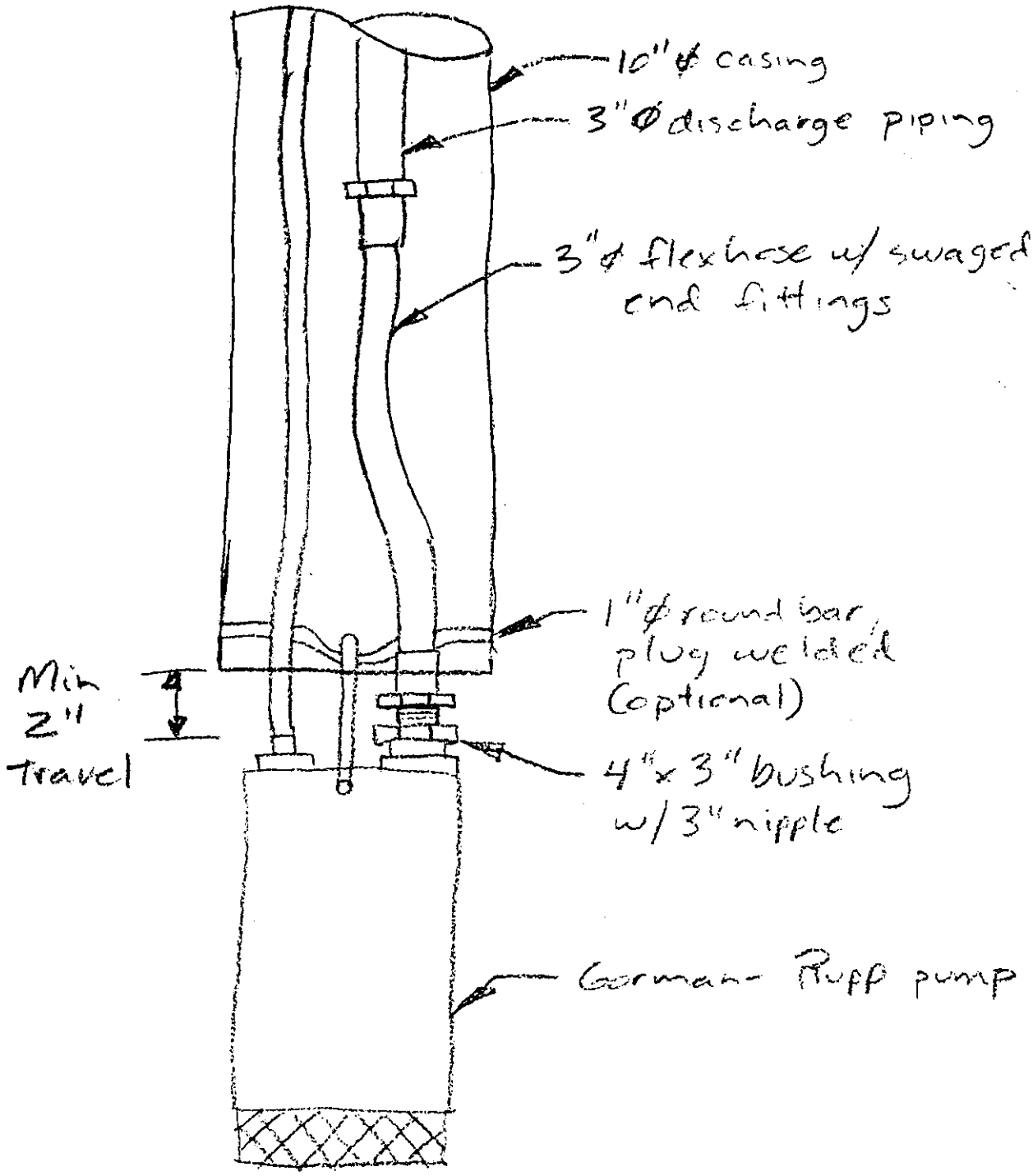

C-106 Supernate Removal Pump
(Flygt Pumps)

Replacement Acid Pump
(Gorman-Rupp Pump)

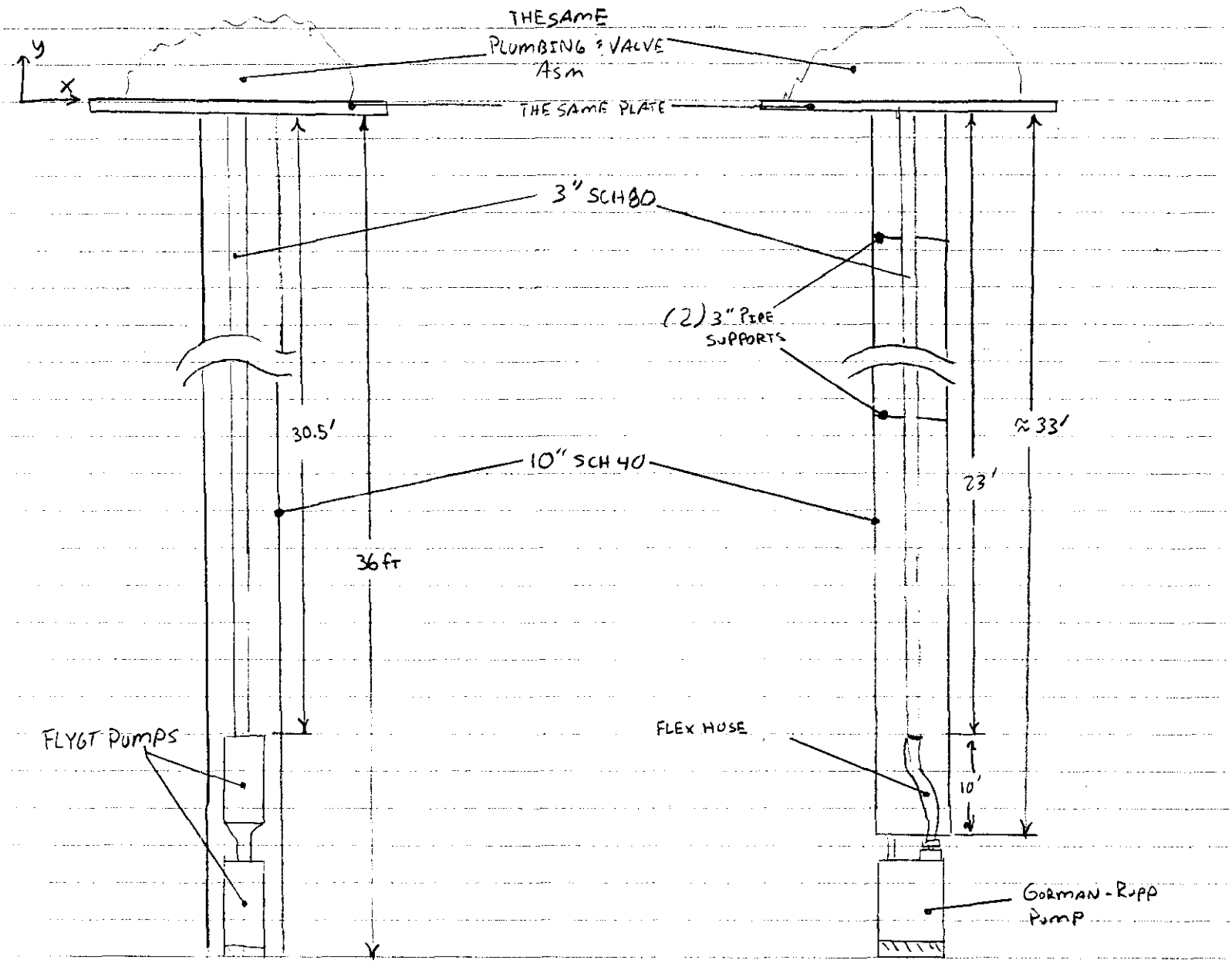

THE CABLE AND SUPPORTS FOR THE REPLACEMENT PUMP WEIGH ≤ WEIGHT OF CABLE FOR THE FLYGT PUMP ASM.

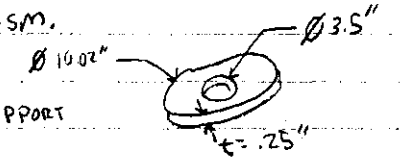

OVERALL DIMENSIONS
and
WEIGHTS APPROXIMATE

PUMP MET WEIGHT:	281 LBS.
PUMP & CABLE NET WEIGHT:	313 LBS.
CONTROL BOX NET WEIGHT:	35 LBS.
GROSS SHIPPING WEIGHT:	363 LBS.
EXPORT CRATE:	7.9 CU. FT.

RPP-17385, REV 0
ATTACHMENT. A
PG A4 OF A7

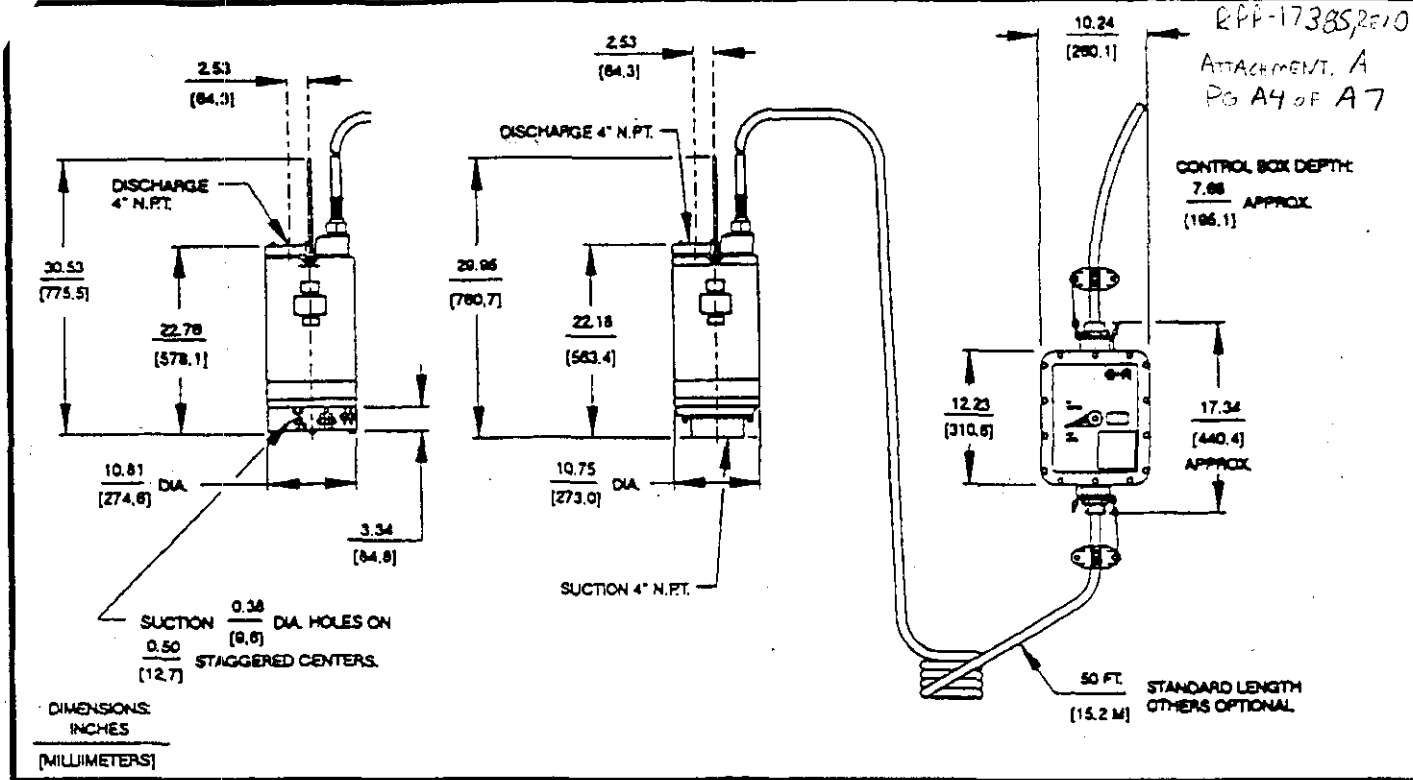

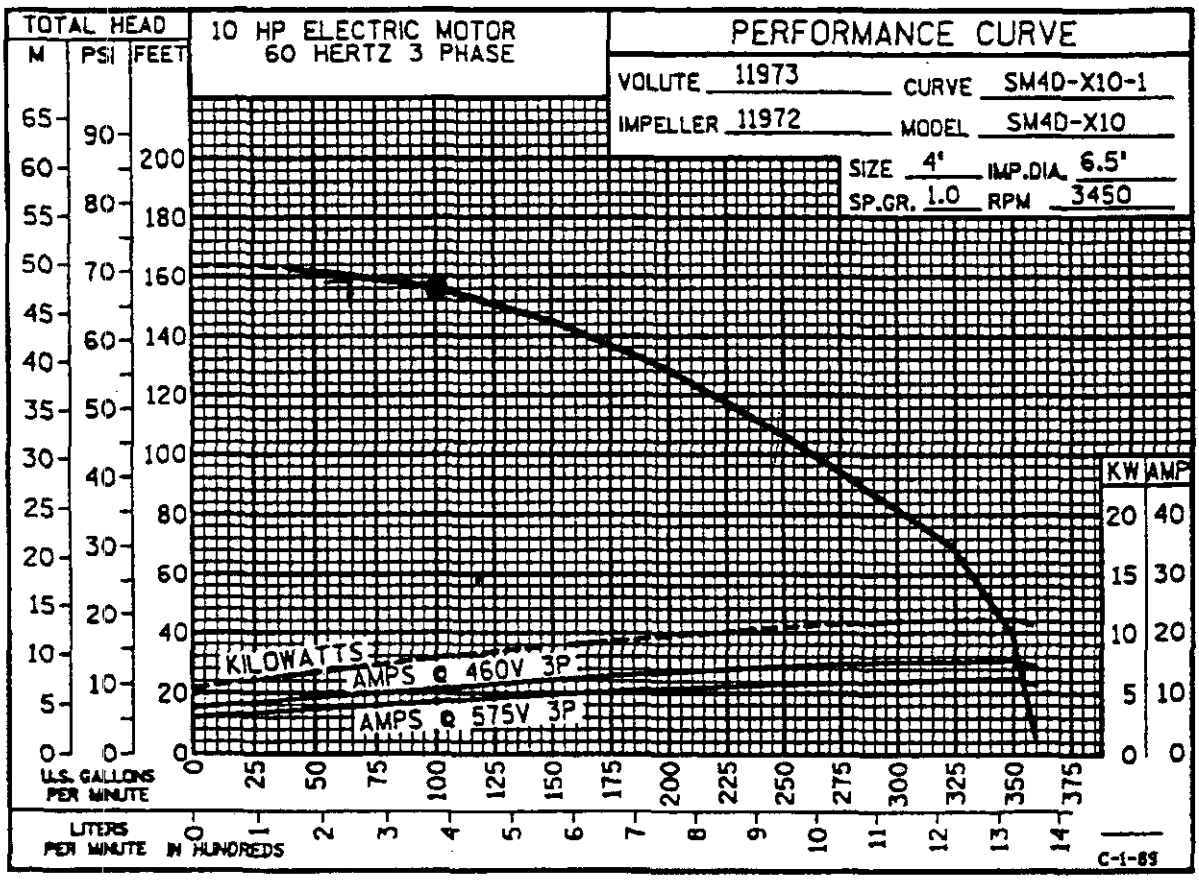

THE GORMAN-RUPP COMPANY • MANSFIELD, OHIO

GORMAN-RUPP OF CANADA LIMITED • ST. THOMAS, ONTARIO, CANADA

Printed in U.S.A.

© Copyright by the Gorman-Rupp Company 1990

R PP-17385, REV. 0
ATTACHMENT A PG A5 OF A7

TITAN INDUSTRIES
Manufacturer of Industrial Hose
11121 Garfield Avenue
South Gate, CA 90280
800-242-HOSE (4673)

CHEMICAL

SP-483 LIGHT-N-BRIGHT CHEMICAL HOSE W/STATIC WIRE

Unique versatile suction and discharge hose that will handle 90% of all known chemicals. Our special multi-chem cross linked polyethylene tube and Arana manufacturing method allows superior chemical resistance and user flexibility. Spiral construction provides excellent working pressure. A minimum 4 to 1 safety factor adds protection against impulse surges which help reduce worker injuries and environmental accident. External PVC *rod provides full vacuum capabilities and superior cover abrasion* resistance.

Tube: Modified X-link polyethylene.
Reinforcement: Multiple plies of polyester, supported by a PVC rod helix with static wire.
Cover: Blue synthetic cover.
Temperature Rating: -40° to +180° F.

I.D.	O.D.	Bend Radius	Working Pressure PSI	Weight LB/FT	Vacuum Rating
2"	3"	10"	150	1.34	Full
3"	4"	15"	150	1.89	Full
4"	5"	20"	150	2.45	Full

SKETCH OF LIFTING CRADLE

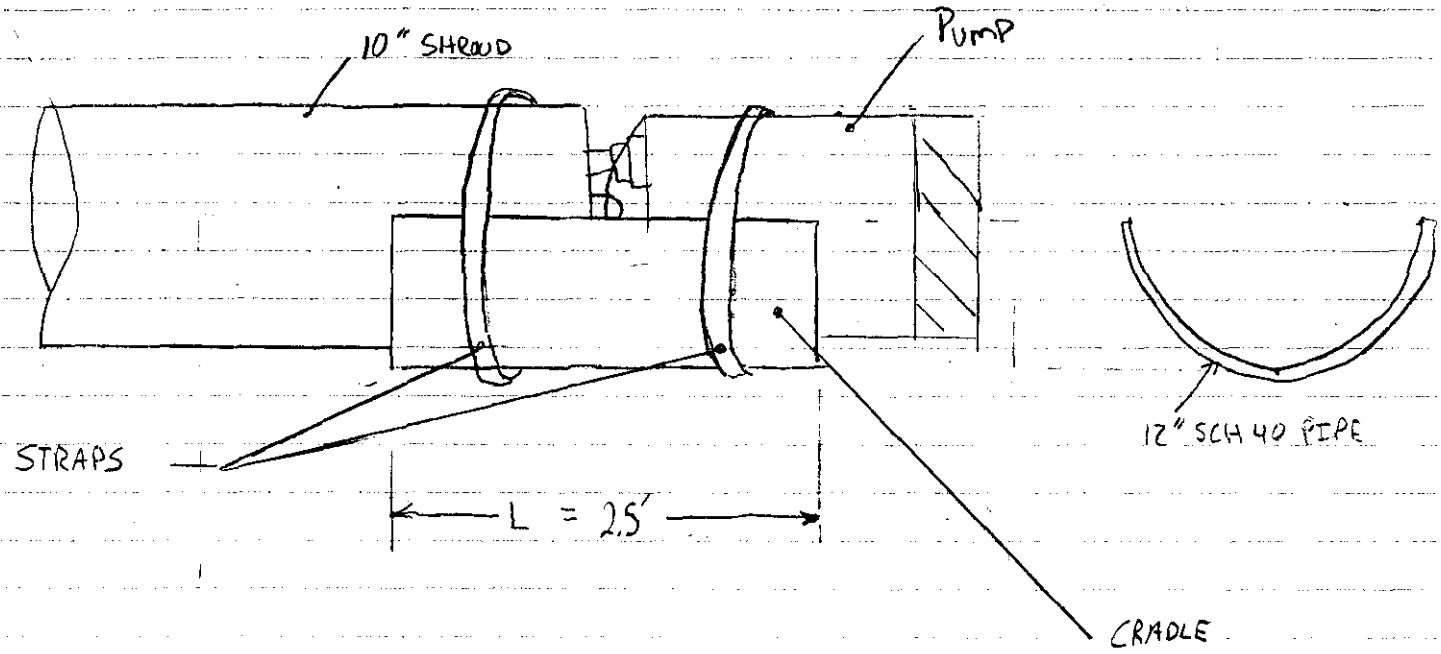

CALCULATED BY: SAM PAULSEN 7/24/03

CHECKED BY: PAUL DORSH 7/24/03

RPP-17385, REV. 0

ATTACHMENT A PAGE A7 OF A7

CONSERVATIVE LOADING CONDITION

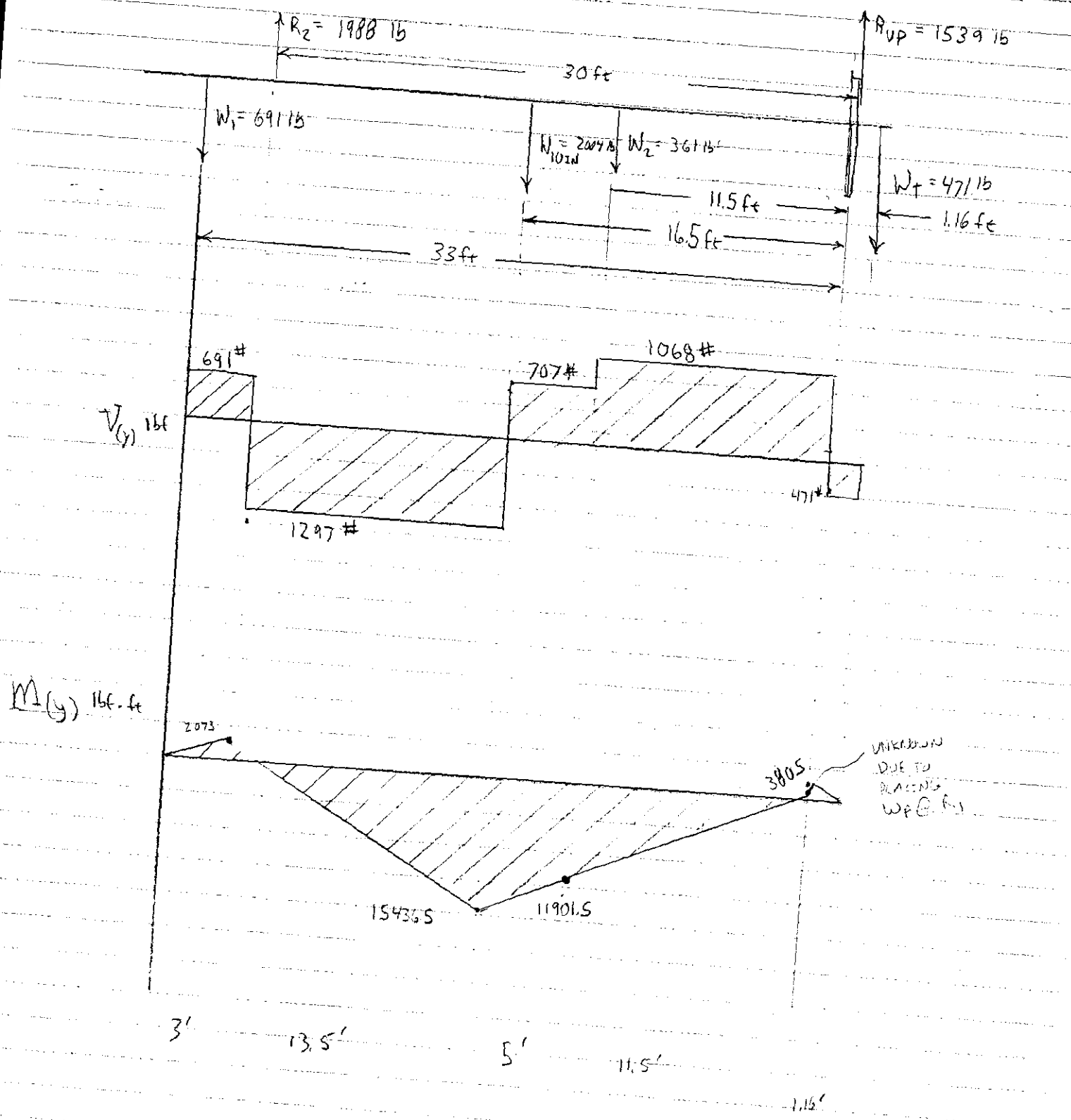

Attachment B:

Excerpt from Mechanics of Materials,

Gere and Tomishenko

Description	**Pages**
Excerpt from Gere and Tomishenko (Mohr's Circle)	B2-4

7.4 MOHR'S CIRCLE FOR PLANE STRESS

The transformation equations for plane stress can be represented graphical form by a plot known as **Mohr's circle.*** This graphical rep sentation is extremely useful because it enables you to visualize the re tionships between the normal and shear stresses acting on vario inclined planes at a point in a stressed body. It also provides a means f calculating principal stresses, maximum shear stresses, and stresses inclined planes. Furthermore, Mohr's circle is valid not only for stress but also for other quantities of a similar mathematical nature, includi strains and moments of inertia.

■ Equations of Mohr's Circle

The equations of Mohr's circle can be derived from the transformati equations for plane stress (Eqs. 7-4a and 7-4b). The two equations a repeated here, but with a slight rearrangement of the first equation:

$$\sigma_{x_1} - \frac{\sigma_x + \sigma_y}{2} = \frac{\sigma_x - \sigma_y}{2}\cos 2\theta + \tau_{xy}\sin 2\theta \qquad (7\text{-}29$$

$$\tau_{x_1y_1} = -\frac{\sigma_x - \sigma_y}{2}\sin 2\theta + \tau_{xy}\cos 2\theta \qquad (7\text{-}29$$

From analytic geometry, we might recognize that these two equations a the equations of a circle in parametric form. The angle 2θ is the par meter and the stresses σ_{x1} and τ_{x1y1} are the coordinates. However, it is n necessary to recognize the nature of the equations at this stage—if w eliminate the parameter, the significance of the equations will becom apparent.

To eliminate the parameter 2θ, we square both sides of each equa tion and then add the two equations. The equation that results is

$$\left(\sigma_{x_1} - \frac{\sigma_x + \sigma_y}{2}\right)^2 + \tau_{x_1y_1}^2 = \left(\frac{\sigma_x - \sigma_y}{2}\right)^2 + \tau_{xy}^2 \qquad (7\text{-}3($$

This equation can be written in simpler form by using the following nota tion from Section 7.3 (see Eqs. 7-27 and 7-12, respectively):

$$\sigma_{aver} = \frac{\sigma_x + \sigma_y}{2} \qquad R = \sqrt{\left(\frac{\sigma_x - \sigma_y}{2}\right)^2 + \tau_{xy}^2} \qquad (7\text{-}31a,b$$

Equation (7-30) now becomes

$$(\sigma_{x_1} - \sigma_{aver})^2 + \tau_{x_1y_1}^2 = R^2 \qquad (7\text{-}3$$

*Mohr's circle is named after the famous German civil engineer Otto Christian M (1835–1918), who developed the circle in 1882 (Ref. 7-4).

which is the equation of a circle in standard algebraic form. The coordinates are σ_{x_1} and $\tau_{x_1y_1}$, the radius is R, and the center of the circle has coordinates $\sigma_{x_1} = \sigma_{aver}$ and $\tau_{x_1y_1} = 0$.

Mohr's circle can be plotted from Eqs. (7-29) and (7-32) in two different ways. In the first form of Mohr's circle, we plot the normal stress σ_{x_1} positive to the right and the shear stress $\tau_{x_1y_1}$ positive downward, as shown in Fig. 7-14a. The advantage of plotting shear stresses positive downward is that the angle 2θ on Mohr's circle is positive when counterclockwise, which agrees with the positive direction of 2θ in the derivation of the transformation equations (see Figs. 7-1 and 7-2). In the second form of Mohr's circle, $\tau_{x_1y_1}$ is plotted positive upward but the angle 2θ is now positive clockwise (Fig. 7-14b), which is opposite to its usual positive direction.

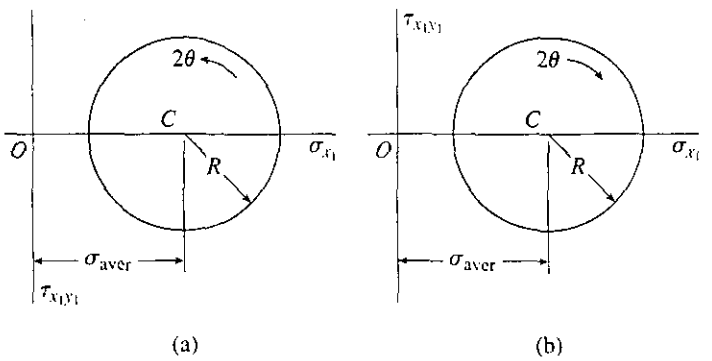

Fig. 7-14 Two forms of Mohr's circle: (a) $\tau_{x_1y_1}$ is positive downward and the angle 2θ is positive counterclockwise, and (b) $\tau_{x_1y_1}$ is positive upward and the angle 2θ is positive clockwise. (*Note:* This book uses the first form.)

Both forms of Mohr's circle are mathematically correct, and either one can be used. However, it is easier to visualize the orientation of the stress element if the positive direction of the angle 2θ is the same in Mohr's circle as it is for the element itself. Furthermore, a counterclockwise rotation agrees with the customary right-hand rule for rotation. Therefore, we will opt for the first form of Mohr's circle (Fig. 7-14a) in which *positive shear stress is plotted downward and a positive angle 2θ is plotted counterclockwise.*

■ Construction of Mohr's Circle

Mohr's circle can be constructed in a variety of ways, depending upon which stresses are known and which are unknown. Also, personal preferences often determine how one proceeds. For our immediate purpose, which is to show the basic properties of the circle, let us assume that we know the stresses σ_x, σ_y, and τ_{xy} acting on the x and y planes of an element in plane stress (Fig. 7-15a). As we will see, this information is sufficient to construct the circle. Then, with the circle drawn, we can determine the stresses σ_{x_1}, σ_{y_1}, and $\tau_{x_1y_1}$ acting on an inclined element (Fig. 7-15b). We can also obtain the principal stresses and maximum shear stresses from the circle.

RPP-17385, REV.0
ATTACHMENT B PG. B4 OF B4

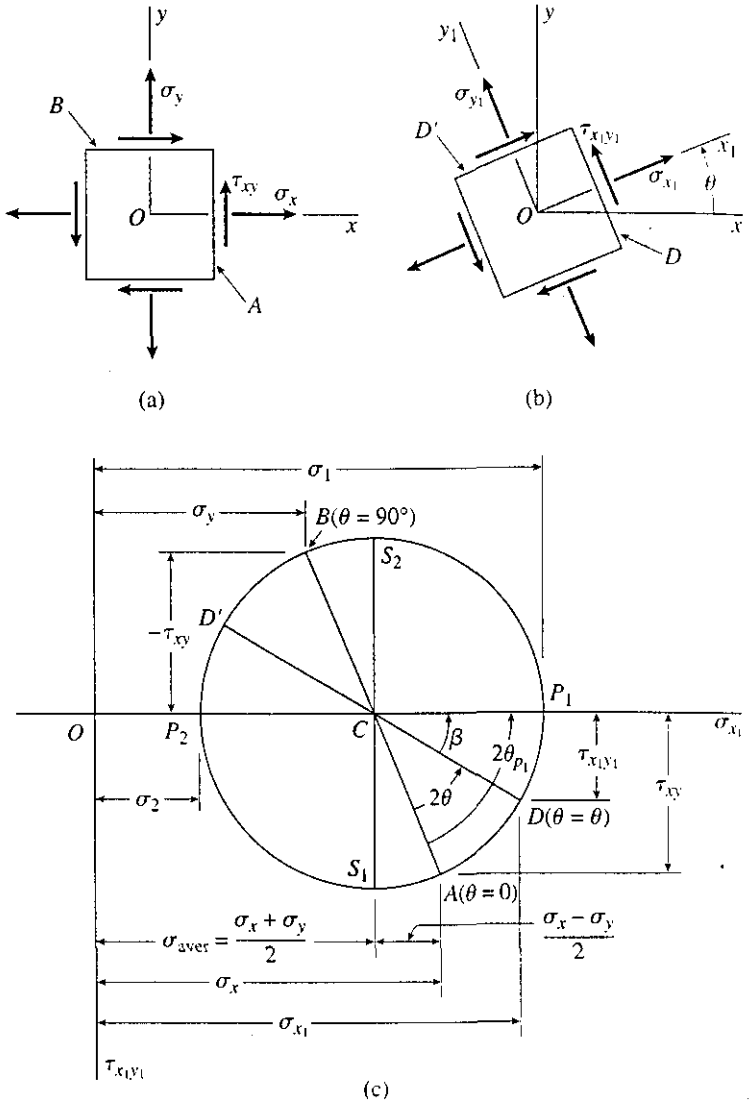

Fig. 7-15 Construction of Mohr's circle for plane stress

With σ_x, σ_y, and τ_{xy} known, the procedure for constructing Mohr's circle is as follows (see Fig. 7-15c):

(1) Draw a set of coordinate axes with σ_{x_1} as abscissa (positive to the right) and $\tau_{x_1y_1}$ as ordinate (positive downward).

(2) Locate the center C of the circle at the point having coordinates $\sigma_{x_1} = \sigma_{aver}$ and $\tau_{x_1y_1} = 0$ (see Eqs. 7-31a and 7-32).

(3) Locate point A, representing the stress conditions on the x face of the element shown in Fig. 7-15a, by plotting its coordinates $\sigma_{x_1} = \sigma_x$ and $\tau_{x_1y_1} = \tau_{xy}$. Note that point A corresponds to $\theta = 0$. Also, note

Attachment C:

Exerpt from RPP-14445

Description	**Pages**
Excerpt from RPP-14445, Structural Calc for C-106 Supernate Removal Pump	C2-C8

ANALYTICAL CALCULATIONS

RPP-14445, Rev. 0

Subject: Structural Analysis of C-106 Supernate Removal Pump Assy (LRS)
Originator: Sam Paulsen Date: 2/20/03
Checker: Wayne Adamek Date: 2/20/03 2/21/03

1.0 Purpose

The Liquid Removal System, that is to be installed into Riser 13 of C-06B Heel Pit, will require Hoisting and Rigging for installation. During the lifting operation the system will be introduced to forces and moments throughout. The design will be examined to ensure the lifting procedure doesn't cause damage to the pumping assembly.

Furthermore, once the pump is installed and the W320 sluicing nozzle is activated to dislodge the solids in the tank, it is possible that the sluicing stream could contact the pump assembly. Because the flow rates for the sluicing nozzle will be as high as 350-gpm, the jet stream can translate a significant amount of momentum to the pump assembly if hit by the stream. Weak spots in the LRS pump assembly design will be examined to ensure the sluicer will not damage the pump assembly.

2.0 Open Items

None

3.0 Method of Analysis

The methods used in this calculation are based upon static loading of the system. Stresses are calculated due to these loads. The calculated stresses are compared to allowable stress design criteria (AISC, Manual of Steel Construction).

Mathcad was used for these calculations. All calculations are confirmed using either a handheld calculator or an alternative form of calculation. Mathcad™ is a registered trademark of Mathsoft, Inc. One Kendall Square, Cambridge, Massachusetts.

4.0 Input Data

4.1. Dimensions and other input data are derived from drawing H-14-104773. (See Attachment C for Current Information)
4.2. Weights and centers of gravity were provided by a computer generated assembly in SolidWorks 2001Plus.
4.3. See Calculation Section for additional input data that is pertinent to individual equations.

5.0 Results

	HOISTING STRESS ANALYIS			
Sec.	Analysis Performed	Stress (or Result)	Allowable	DM
8.2.2	Weld Analysis, 10" Shroud to Main Plate	70.8 lbf/in	2987 lbf/in	41.1
8.2.3	10" SCH 40 Pipe (Bending)	5247 psi	23100 psi	3.4
	SLUICING IMPACT STRESS ANALYSIS			
Sec.	Analysis Performed	Stress (or Result)	Allowable	DM
8.3.1	Max Angle of Incidence	24 deg	-	-
8.3.2	Horizontal Force at Impact	221.1 lbf	-	-
8.3.3	Bending Moment @ the Base (i.e. Main Plate)	95503 lbf-in	-	-
8.3.4	Weld Analysis, 10" Shroud to Main Plate	1052.3 lbf/in	2987 lbf/in	1.82
8.3.5	10" SCH 40 Pipe (Bending)	3194 psi	23100 psi	6.23
	TRANSLATED FORCE CACLULATION			
Sec.	Analysis Performed	Stress (or Result)	Allowable	DM
8.4.1	Riser Clearance Angle Calculation	3.3 deg	-	-
8.4.2	Plate to Pit Floor Angle Calculation	8.8 deg	-	-
8.4.3	Dowel Clearance Angle Calculation	8.2 deg	-	-
8.4.4	Resultant Horizontal Force	704.4 lbf	9290 lbf	12.2

6.0 Conclusions

The Supernate Removal Pump Assembly, described by Attachment C, will withstand both horizontal lifting of the system and being hit by the sluicer stream without suffering adverse effects. The system is adequate for the proposed application. (See Section 8.2 for Hoisting and Rigging requirements) AND ATTACHMENT E SSP 2/21/03 2/21/03
Upon contact of the sluicer stream to the supernate pump, the pump will rock and strike the Riser Adapter Assembly. The forces caused by this are not significant to the structure. If this is of concern (not required) either a centrally balanced counter weight of 2600 lbf or donut w/set screw placed on the dowel pins could be implemented. Either of these devices, or similarly functioning device, could be installed after pump installation to eliminate the concern for pump rocking.

ANALYTICAL CALCULATIONS

RPP-14445, Rev. 0

Subject: Structural Analysis of C-106 Supernate Removal Pump Assy (LRS)
Originator: Sam Paulsen Date: 2/20/03
Checker: Wayne Adamek Date: 2/20/03

7.0 References

American Institute of Steel Construction, 1991, *Manual of Steel Construction, Allowable Stress Design*, 9th Edition, Chicago, IL

Avallone and Baumeister, 1996, *Marks' Standard Handbook for Mechanical Engineers*, 10th Edition, , McGraw Hill, New York, NY

Drawings:

H-2-41294, Rev. 2, 1950, *Mech. Equip. - Plan, Section & Details - Heel Jet*, The Kellex Corporation, Richland, WA.

H-2-41295, Rev. 3, 1950, *Mech. Equip. - Sub Assy - Heel Jet Adapter Ring*, The Kellex Corporation, Richland, WA.

H-2-41297, Rev. 2, 1950, *Mech. Equip. - Sub Assy - Adapter Ring*, The Kellex Corporation, Richland, WA.

H-2-41345, Rev. 3, 1950, *Structural Concrete Plan & Sections - Heel Pit*, The Kellex Corporation, Richland, WA.

H-2-41367, Rev. 0, 1950, *Mech. Equip. - Detail - Long Dowels*, The Kellex Corporation, Richland, WA

H-2-818549, Rev. 1, 1995, *Piping Sluicer Installation*, W-320 Tank 241-C-106 Sluicing, U.S. Dept. of Energy, Richland, WA

H-14-104140, Rev. 1, 2000, *Submersible Pump Assembly Modifications*, U.S. Dept. of Energy, Richland, WA.

H-14-104773, Rev. 0, 2003, *C-106 Retrieval Supernate Removal Pump Assy and Details*, U.S. Dept. of Energy, Richland, WA

H-14-105651, Rev. 0, 2002, *Hydraulic Ram for Heel Jet Removal*, 241-C-06B Heel Pit, U.S. Dept. of Energy, Richland, WA.

HNF-2477, 1997, *Project W-320 241-C-106 Sluicing Piping Calculations Vol. 7*, Rev. 0, Flour Daniel Northwest, Richland, WA

HNF-IP-0842, 2002, *Vol. 4, Sec. 3.6, Engineering Calculations*, Rev. 16, CH2M Hill Hanford Group, Richland, WA

RPP-8360, 2002, *Lifting Point Evaluation Process*, Rev. 2, CH2M Hill Hanford Group, Richland, WA

8.0 Calculations

8.1 Calculation Input Data

Representative Sketch of System

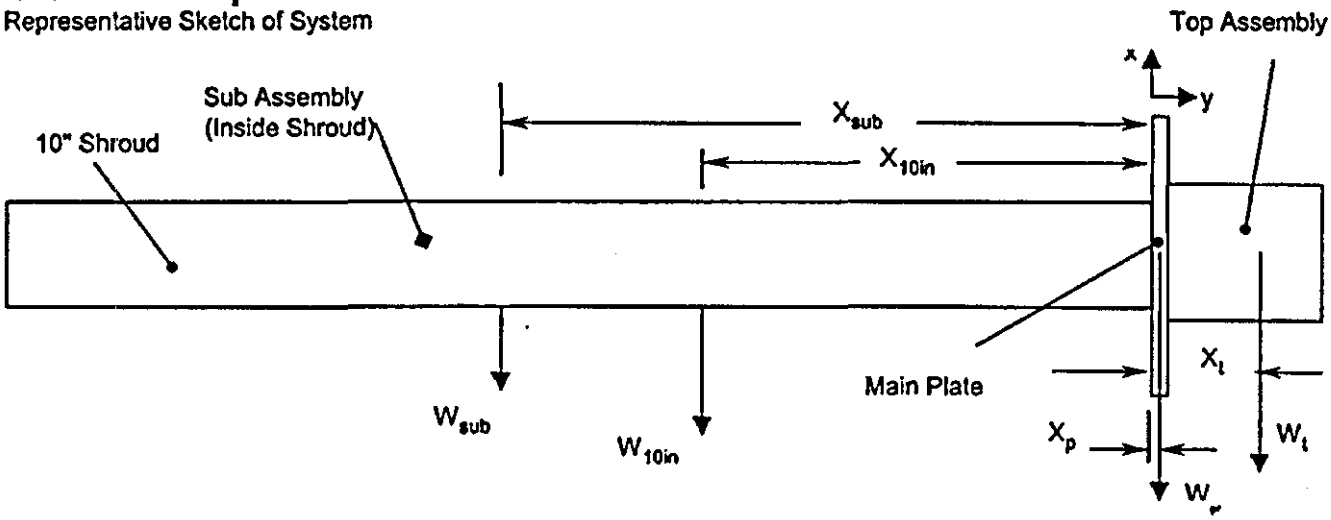

ANALYTICAL CALCULATIONS

RPP-14445, Rev. 0

Subject: Structural Analysis of C-106 Supernate Removal Pump Assy (LRS)
Originator: Sam Paulsen Date: 2/20/03
Checker: Wayne Adamek Date: 2/20/03 2/21/03

$\eta_\omega := 1.5$		Factor of Safety Multiplier for Weight, for conservatism.
$W_p := \eta_\omega \cdot 521 \cdot lbf$	$W_p = 781.5\,lbf$	Plate Weight (Attachment A, pg. 3)
$W_t := \eta_\omega \cdot 314 \cdot lbf$	$W_t = 471\,lbf$	System Above Plate (Top Asm) Weight (Attachment A, pg. 4)
$W_{10in} := \eta_\omega \cdot 1445.4 \cdot lbf$	$W_{10in} = 2168\,lbf$	10" SCH 40 Shroud Weight (Attachment A, pg. 5)
$W_{sub} := \eta_\omega \cdot 507.8 \cdot lbf$	$W_{sub} = 761.7\,lbf$	Flygt Pump and Piping Sub Assembly Weight (Attachment A pg. 6)
$W'_T := W_p + W_t + W_{10in} + W_{sub}$	$W'_T = 4182.3\,lbf$	Summed Weight of Major Components

All weights were derived from Solid Works. The weights of individual components and systems were checked and verified with hand calculations for accuracy (see Attachment D, pg. 2). Because of the system complexity a factor of safety, η_ω, of 50% is added to each reported weight for conservatism in the stress calculations below. To account for residual waste after removal from the tank an extra 25% is added, also another factor of 25% is applied to account for dynamic loading during the crane lifting process (RPP-8360, pg. 4).

The Centers of Gravity are given for the major components. The CG's were derived from Solid Works, unless otherwise stated. The CG's were checked and verified via hand calculations to ensure accuracy (See Attachment D, pg. 2). (See Attachment B, pg. 2 for Coordinate System)

$X_p := .5 \cdot in$	Center of Gravity in the y-direction of the Main Plate (Attachment A, pg. 3)
$X_t := 13.9 \cdot in$	Center of Gravity in the y-direction for the Top Asm (Attachment A, pg. 4)
$X_{10in} := 207.5 \cdot in$	Center of Gravigy in the negative y-direction, of 10" SCH 40 Shroud (Attachment A, pg. 5)
$X_{sub} := 257 \cdot in$	Center of Gravity, in the negative y-direction, of Sub Assembly (Attachment A, pg. 6)

8.2 Hoisting Reaction Determination and Stress Calculations

The forces and moments throughout the system, due to horizontal hoisting of the assembly, are determined. During the hoisting operation the pump will be picked from Horizontal to Vertical by lifting on two hoist rings that are attached to the main plate of the pump assembly (Attachment C) A spreader bar will be utilized for avoidance of the top assembly by the hoisting and rigging apparatus (use item 29). A second crane will be required to lift on the other end of the pump. A strap will be wrapped around the 10" SCH 40 shroud. The system is modeled as a simply supported beam at these lifting points (see sketches below).

ATTACHED TO MOUNTING FLANGE SSP 2/21/03 2/21/03

Hoisting on item 29 (Attachment C) shall be used for lifting from horizontal. The distance from the bottom of the pump plate to the second lifting location shall be 30' ± 6" (not critical). Item 19 (Attachment C) shall be used for vertical lifting only. For more detail see Attachment C.

Representative Sketch

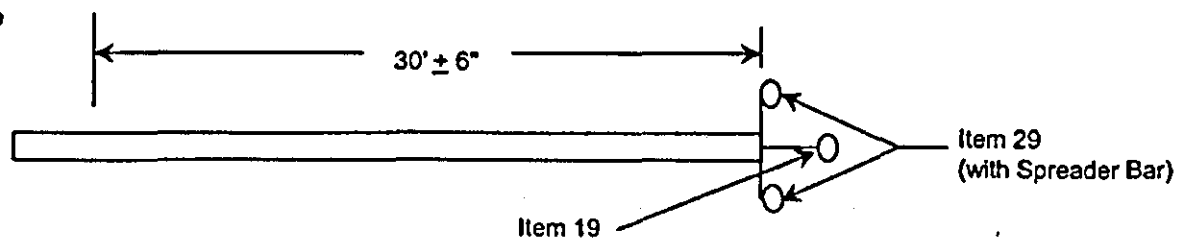

ANALYTICAL CALCULATIONS

RPP-14445, Rev. 0

Subject: Structural Analysis of C-106 Supernate Removal Pump Assy (LRS)
Originator: Sam Paulsen Date: 2/20/03
Checker: Wayne Adamek Date: 2/20/03

Sketch of Loaded System

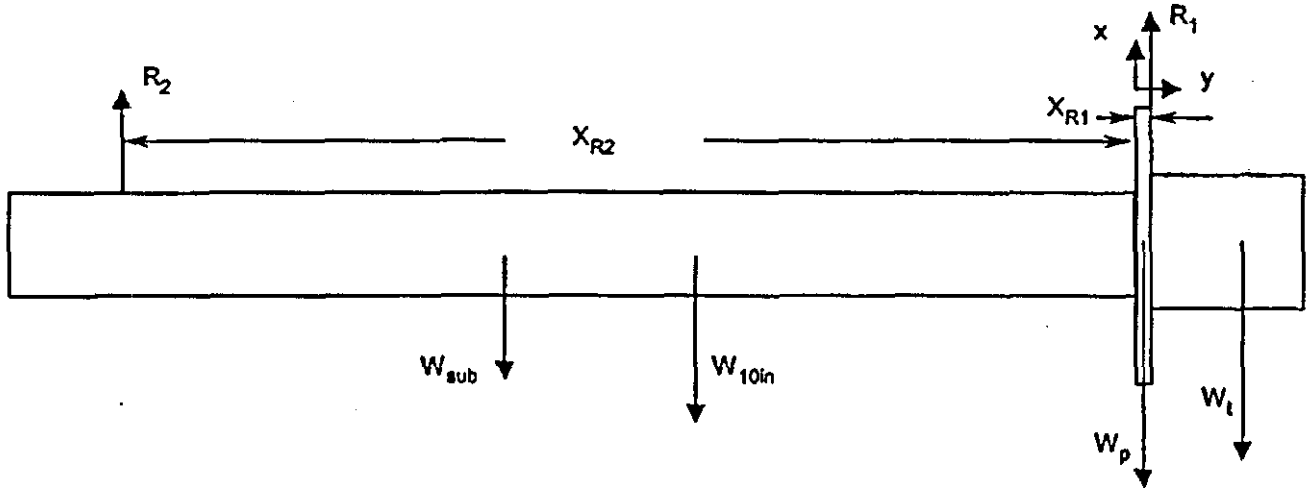

$X_{R2} := 360 \cdot in$ — Negative X Distance from Origin to Reaction 2, Just above Flygt Pump Assemblies (Ref. H-14-104773, sht 2 and H-14-104140, sht. 1)

$X_{R1} := 1 \cdot in$ — Positive X Distance from Origin to Reaction 1 (Attachment C, pg. 3 and Attachment B, pg. 2)

Because the Flygt Pump and Piping Sub Assembly is encased within the 10" shroud it will only deflect until it has contacted the shroud. The maximum amount that the sub assembly can deflect before its load is transfered to the 10" shroud is 1.198" (see Attachment B, pg. 3). Once contact is acheived a reaction force, equal to the sub assembly weight, will act at the end of the 10" shroud (i.e. the point of contact between the sub assembly and pipe). This force and moment arm will be used in the stress determinations for conservatism.

$L_{10in} := 36 \cdot ft$ — Length of 10" SCH 40 Pipe, for conservatism (Attachment C, pg. 3)

Statics Equations:

$\Sigma F_x = 0$ Sum Forces in the x direction Rearrange

$W_{sub} + W_{10in} + W_p + W_t = R_2 + R_1$ $R_2 = W_{sub} + W_{10in} + W_p + W_t - R_1$

Substitute W'_T $R_2 = W'_T - R_1$

$\Sigma M = 0$ Sum Moments about Origin (Bottom of Main Plate)

$$(L_{10in})W_{sub} + (X_{10in})W_{10in} + (X_{R1})R_1 = (X_t)W_t + (X_p)W_p + (X_{R2})R_2$$

Substitute Force equation into Moment equation and solve for R_1 and R_2.

$$R_1 := \frac{L_{10in} \cdot W_{sub} + X_{10in} \cdot W_{10in} - X_t \cdot W_t - X_p \cdot W_p - X_{R2} \cdot W'_T}{-(X_{R2} + X_{R1})}$$

$R_2 := W'_T - R_1$

$R_1 = 2032.2\,lbf$ Reaction 1 Resultant Force

$R_2 = 2150\,lbf$ Reaction 2 Resultant Force

ANALYTICAL CALCULATIONS

RPP-14445, Rev. 0

Subject: Structural Analysis of C-106 Supernate Removal Pump Assy (LRS)
Originator: Sam Paulsen Date: 2/20/03
Checker: Wayne Adamek Date: 2/20/03

8.2.1 Shear and Moment Diagram

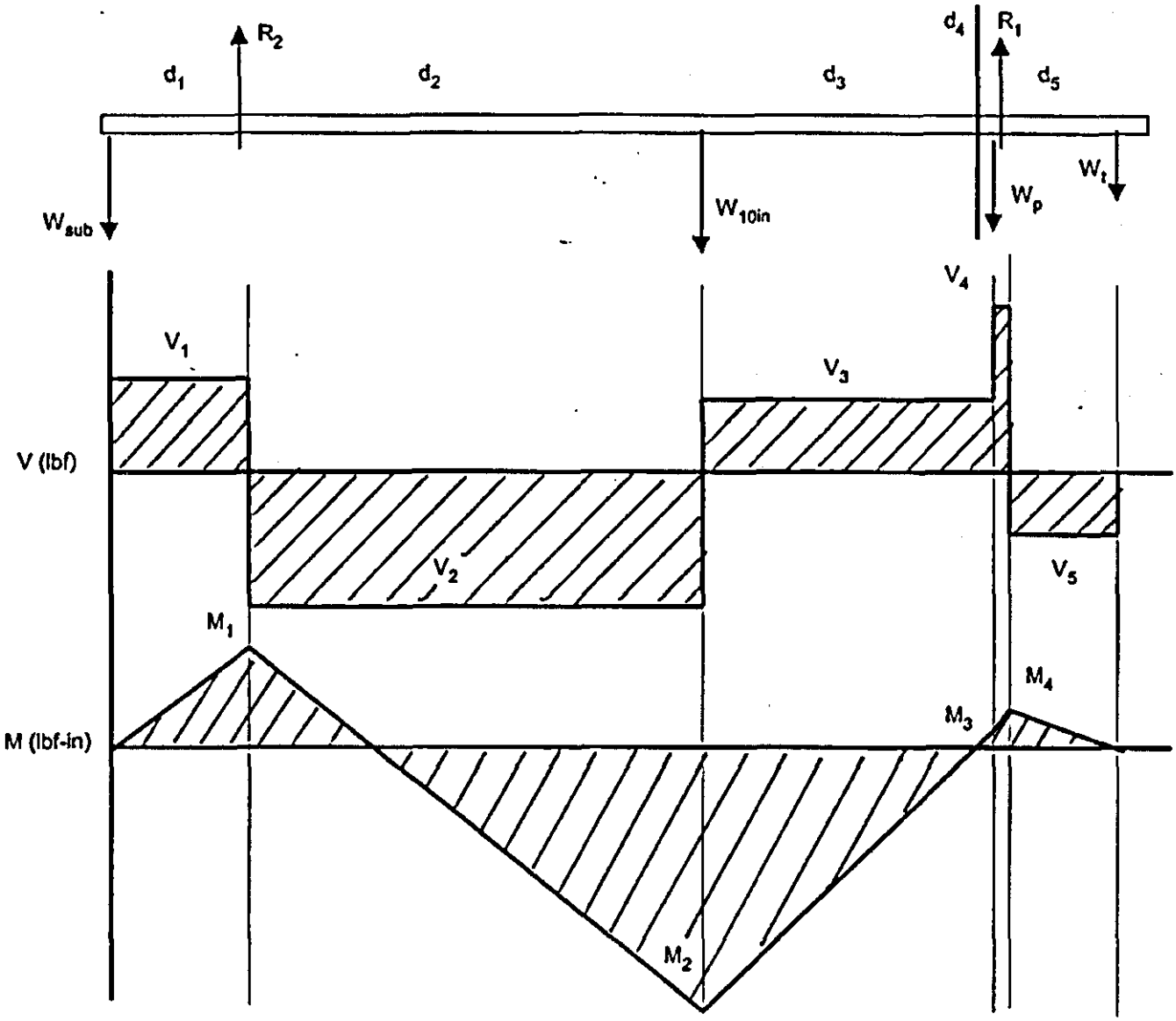

ANALYTICAL CALCULATIONS

RPP-14445, Rev. 0

Subject: Structural Analysis of C-106 Supernate Removal Pump Assy (LRS)
Originator: Sam Paulsen Date: 2/6/03
Checker: Wayne Adamek Date: 2/20/03

Distance		Shear		Moment	
$d_1 := L_{10in} - X_{R2}$	$d_1 = 72\,in$	$V_1 := W_{sub}$	$V_1 = 761.7\,lbf$	$M_1 := V_1 \cdot d_1$	$M_1 = 54842\,lbf \cdot in$
$d_2 := X_{R2} - X_{10in}$	$d_2 = 152.5\,in$	$V_2 := V_1 - R_2$	$V_2 = -1388.4\,lbf$	$M_2 := M_1 + V_2 \cdot d_2$	$M_2 = -156886\,lbf \cdot in$
$d_3 := X_{10in} + X_p$	$d_3 = 208\,in$	$V_3 := V_2 + W_{10in}$	$V_3 = 779.7\,lbf$	$M_3 := M_2 + V_3 \cdot d_3$	$M_3 = 5295\,lbf \cdot in$
$d_4 := X_{R1} - X_p$	$d_4 = 0.5\,in$	$V_4 := V_3 + W_p$	$V_4 = 1561.2\,lbf$	$M_4 := M_3 + V_4 \cdot d_4$	$M_4 = 6076\,lbf \cdot in$
$d_5 := X_t - X_{R1}$	$d_5 = 12.9\,in$	$V_5 := V_4 - R_1$	$V_5 = -471\,lbf$	$M_5 := M_4 + V_5 \cdot d_5$	

8.2.2 Analysis of Weld, 10" Shroud to Main Plate

The weld that joins the 10" SCH 40 Pipe to the Main Plate must be examined. No welds in the sub assembly require examination because it is considered that all of the sub assembly weight is transferred to the 10" shroud. This is a reasonable consideration based upon the clearance between sub assembly and 10" Shroud I.D (Attachment B, pg. 3).

$d_{10b} := 10.75 \cdot in$ Weld diameter (Attachment C, pg. 2)

$A_w := \pi \cdot d_{10b}$ Weld Area (Ref. Mark's Handbook, pg. 13-39)

$S_w := \frac{\pi \cdot d_{10b}^2}{4}$ Weld Section Modulus

$t := .25 \cdot in$ Weld Leg (Attachment C, pg. 3)

Shear Load

$V_y := \frac{V_3}{A_w}$ $V_y = 23.1 \frac{lbf}{in}$

Bending Load

$f_z := \frac{M_4}{S_w}$ $f_z = 66.9 \frac{lbf}{in}$ M_4 used as bending moment for conservatism.

Combined Load

$L_{tl} := \sqrt{\left(f_z^2 + V_y^2\right)}$ $L_{tl} = 70.8 \frac{lbf}{in}$

The weld is analyzed as a fillet weld.

$F_y := 35000 \cdot psi$ Yield Strength for ASTM A53 CS, (Attachment D, pg. 4)

$F_{al} := .4 \cdot F_y \cdot \sin(45deg) \cdot t$ Allowable Stress for an 1/4" Fillet Weld (Ref. AICS Manual of Steel Construction Table J2.5, pg. 5-70 and Sect. J2a pg. 5-67) Note: 40 percent of the material strength is conservative vs. 30% of weld material strength.

$F_{al} = 2475 \frac{lbf}{in}$

$DM_1 := \frac{F_{al}}{L_{tl}} - 1$ $DM_1 = 33.9$ Design Margin for Weld

The 1/4" fillet weld that joins the 10" Shroud to the Main Plate assures structural integrity.

ANALYTICAL CALCULATIONS

RPP-14445, Rev. 0

Subject: Structural Analysis of C-106 Supernate Removal Pump Assy (LRS)
Originator: Sam Paulsen Date: 2/20/03
Checker: Wayne Adamek Date: 2/20/03

8.2.3 Analysis of 10" SCH 40 Pipe

$M_{max} := -M_2$	$M_{max} = 156886\,lbf \cdot in$	Maximum Bending Stress in 10" Pipe
$S := 29.9 \cdot in^3$		Section Modulus for 10" SCH 40 Pipe (Ref. Mark's Handbook pg. 8-150)
$d_{10b} = 10.8\,in$		10" SCH 40 Pipe Diamter (Ref. Mark's Handbook, pg. 8-150)
$t_{10} := .365 \cdot in$		10" SCH 40 Pipe Thickness (Ref. Mark's Handboook, pg. 8-150)
$F_y := 35000 \cdot psi$		Yield Strength for ASTM A53 CS (Attachment D, pg. 4)
$\frac{d_{10b}}{t_{10}} = 29.5 < \frac{3300 \cdot ksi}{F_y} = 94.3$		This is considered a compact section (Ref. AISC Manual of Steel Constuction, pt. 5-36, Table B5.1)
$f_b := .66 \cdot F_y$	$f_b = 23100\,psi$	Allowable Bending Stress based upon above compact section criteria (Ref. AISC Manual of Steel Construction, pg. 5-48, F3-1)
$\sigma_b := \frac{M_{max}}{S}$	$\sigma_b = 5247\,psi$	Bending Stress
$DM_2 := \frac{f_b}{\sigma_b} - 1$	$DM_2 = 3.4$	Design Margin for 3" pipe

The 10" pipe will effectively resist the bending moment associated with hoisting the pump assembly horizontally.

8.3 Sluicing Reaction Determination and Stress Calculations

During the Liquid Retrieval phase of waste retrieval for Tank 241-C-106, it is highly probable that the W320 Sluicer stream will impact upon the Flygt Pump Assembly (Liquid Retrieval Assembly). Therefore, the assembly is checked to see if it will withstand the forces associated with the maximum flow rate, 350 GPM, hitting the bottom of the Flygt Pump. This situation is worst case and will result in the most conservative analysis. (Vortex Shedding is not considered an issue for this application because the pump will not be fully submersed in the fluid stream.)

Input Data:

$F_{sl} := 242 \cdot lbf$	Sluicer Nozzle Force (Ref. HNF-2477, pg. A5)
$L_p := 36 \cdot ft$	Pump Length Estimated Long for Conservatism (Ref. H-14-104773, sht 2 & Attachement C, pg. 3)
$L := 364 \cdot in$	Distance from Top of Sluicer to Bottom of Tank (Ref. H-2-818549, sht 1)
$h := 393 \cdot in$	Distance from Centerline of Sluicer to Centerline of Tank (Ref. W-72743, Attachment D, pg. 3)
$L_s := 15 \cdot ft + 9 \cdot in$	Length of Sluicer Without Nozzle (Top of Sluicer to Rotational Joint), (Ref. H-2-818549, sht 1)
$F_y := 35000 \cdot psi$	Yield Strength for ASTM A53 CS, (Attachment D, pg. 4)
$f_b := .66 \cdot F_y$	Allowable Bending Stress (Ref. AISC Manual of Steel Construction, pg. 5-48, F3-1. Also See above compact section determination)
$S_p := 29.9 \cdot in^3$	Section Modulus for 10" SCH 40 Pipe (Ref. Mark's Handbook, pg. 8-150)
F_h -	Horizontal Force Exerted by the Sluicer at impact
θ -	Angle of Incidence for Sluicer, from Horizontal, (Therfore, if the sluicer was pointing down at the ground it would be at 90 deg.)