Dta. 4

(21) MAY 16 2003 **ENGINEERING DATA TRANSMITTAL**

1. EDT 635115

2. To: (Receiving Organization) Distribution	3. From: (Originating Organization) CHG Design Engineering	4. Related EDT No.:
5. Proj./Prog./Dept./Div.: Design Engineering	6. Design Authority/Design Agent/Cog. Engr.: Tom Mackey, R3-83, 373-3823	7. Purchase Order No.: N/A
8. Originator Remarks: Release and Distribution of RPP-15512 Rev. 0, "Structural Analysis for Proposed ENRAF Installation on 3" Risers of Tanks 241-AY-101/102"		9. Equip./Component No.: N/A
		10. System/Bldg./Facility: Tank 241-AY-101/102
11. Receiver Remarks:	11A. Design Baseline Document? [X] Yes ~~[X] No~~ 4/24/03	12. Major Assm. Dwg. No.: N/A
		13. Permit/Permit Application No.: N/A
		14. Required Response Date:

15. DATA TRANSMITTED

(A) Item No.	(B) Document/Drawing No.	(C) Sheet No.	(D) Rev. No.	(E) Title or Description of Data Transmitted	(F) Approval Designator	(G) Reason for Transmittal	(H) Originator Disposition	(I) Receiver Disposition
1	RPP-15512		0	Structural Analysis for Proposed ENRAF Installation on 3" Risers of Tanks 241-AY 101/102	N.A.	1,2	1	

16. KEY

Approval Designator (F)	Reason for Transmittal (G)	Disposition (H) & (I)
E, S, Q, D or N/A (see WHC-CM-3-5, Sec. 12.7)	1. Approval 2. Release 3. Information 4. Review 5. Post-Review 6. Dist. (Receipt Acknow. Required)	1. Approved 2. Approved w/comment 3. Disapproved w/comment 4. Reviewed no/comment 5. Reviewed w/comment 6. Receipt acknowledged

17. SIGNATURE/DISTRIBUTION
(See Approval Designator for required signatures)

(G) Reason	(H) Disp.	(J) Name	(K) Signature	(L) Date	(M) MSIN	(G) Reason	(H) Disp.	(J) Name	(K) Signature	(L) Date	(M) MSIN
1	1	Design Auth. T.C. Mackey, R3-83	T.C. Mackey	4/24/03	R3-83	1	1	Ind. Reveiwer H. Ziada	Hassan H. Ziada	4-24-03	
1	1	Design Agent K. Calibo,	Kateh Calibo	4/18/03							
1	1	Cog. Eng. G. Tardiff, S5-05	[signature]	4/30/03							
1	1	Cog. Mgr. ~~T.C. Oten~~ R.N. DALE	[signature]	5/2/03							
		QA NA									
		Safety NA									
		Env. NA									

18.	19.	20.	21. DOE APPROVAL (if required)
K. Calibo Kateh Calibo 4/18/03 Signature of EDT Originator Date	N/A Authorized Representative for Receiving Organization Date	T.C.Mackey T.C. Mackey 4/24/03 Design Authority/ Cognizant Manager Date	Ctrl. No. N/A [] Approved [] Approved w/comments [] Disapproved w/comments

BD-7400-172-2 (10/97)

BD-7400-172-1

STRUCTURAL ANALYSIS FOR PROPOSED ENRAF INSTALLATION ON 3" RISERS OF TANKS 241-AY-101/102

Author: K. Calibo
LATA, Inc.
Richland, WA 99352
U.S. Department of Energy Contract DE-AC27-99RL-14047

EDT/ECN: 635115 UC: 721
Org Code: 6N100 Charge Code: 500824
B&R Code: Total Pages: ~~53~~ 55
cc 5-16-03

Key Words: RPP-15512, 241-AY-101, 241-AY-102, Structural, Analysis, ENRAF, Nonius, Tank, Soil, Pressure, Load, Calculations, Allowables, Cast Iron, Reducer, Seismic, Leak, Detection

Abstract:

This document analyzed the structural adequacy of proposed ENRAF assembly Installation on 3" risers of Tanks 241-AY-101/102, specifically the strength of the 4-in to 3-in cast iron reducer added to the assembly to connect to 3-in.

TRADEMARK DISCLAIMER. Reference herein to any specific commercial product, process, or service by trade name, trademark, manufacturer, or otherwise, does not necessarily constitute or imply its endorsement, recommendation, or favoring by the United States Government or any agency thereof or its contractors or subcontractors.

Printed in the United States of America. To obtain copies of this document, contact: Document Control Services, P.O. Box 950, Mailstop H6-08, Richland WA 99352, Phone (509) 372-2420; Fax (509) 376-4989.

MAY 16 2003
DATE:
STA: 4
HANFORD RELEASE
ID: 21

5/15/03
Release Approval Date Release Stamp

APPROVED FOR PUBLIC RELEASE

RPP-15512
Rev. 0

STRUCTURAL ANALYSIS FOR PROPOSED ENRAF INSTALLATION ON 3" RISERS OF TANKS 241-AY-101/102

ENGINEERING EVALUATION

Prepared for the U.S. Department of Energy
Assistant Secretary for Environmental Management

CH2MHILL
Hanford Group, Inc.
Richland, Washington
Contractor for the U.S. Department of Energy
Office of River Protection under Contract DE-AC06-99RL14047

Approved for Public Release; Further Dissemination Unlimited

RPP-15512
Rev. 0

STRUCTURAL ANALYSIS FOR PROPOSED ENRAF INSTALLATION ON 3" RISERS OF TANKS 241-AY-101/102

Prepared by
K Calibo
Los Alamos Technical Associates, Inc.

Date Published
April 2003

CH2MHILL
Hanford Group, Inc.
P. O. Box 1500
Richland, Washington

Contractor for the U.S. Department of Energy
Office of River Protection under Contract DE-AC06-99RL14047

Approved for Public Release; Further Dissemination Unlimited

LEGAL DISCLAIMER

This report was prepared as an account of work sponsored by an agency of the United States Government. Neither the United States Government nor any agency thereof, nor any of their employees, nor any of their contractors, subcontractors or their employees, makes any warranty, express or implied, or assumes any legal liability or responsibility for the accuracy, completeness, or any third party's use or the results of such use of any information, apparatus, product, or process disclosed, or represents that its use would not infringe privately owned rights. Reference herein to any specific commercial product, process, or service by trade name, trademark, manufacturer, or otherwise, does not necessarily constitute or imply its endorsement, recommendation, or favoring by the United States Government or any agency thereof or its contractors or subcontractors. The views and opinions of authors expressed herein do not necessarily state or reflect those of the United States Government or any agency thereof.

This report has been reproduced from the best available copy. Available in paper copy and microfiche.

Available electronically at
http://www.doe.gov/bridge. Available for a processing fee to the U.S. Department of Energy and its contractors, in paper, from:
U.S. Department of Energy
Office of Scientific and Technical Information
P.O. Box 62
Oak Ridge, TN 37831-0062
phone: 865-576-8401
fax: 865-576-5728
email: reports@adonis.osti.gov(423) 576-8401

Available for sale to the public, in paper, from:
U.S. Department of Commerce
National Technical Information Service
5285 Port Royal Road
Springfield, VA 22161
Phone: 800-553-6847
fax: 703-605-6900
email: orders@ ntis.fedworld.gov
online ordering:
http://www.ntis.gov/ordering.htm

Printed in the United States of America

STRUCTURAL ANALYSIS FOR PROPOSED ENRAF INSTALLATION ON 3" RISERS OF TANKS 241-AY-101/102

April 2003

By

K. Calibo
Los Alamos Technical Associates, Inc.

For
CH2M Hill Hanford Group, Inc.

For

The U. S. Department of Energy
Office of River Protection, Richland Washington

ANALYTICAL CALCULATIONS APPROVAL

Subject: Structural Analysis for Proposed ENRAF Installation on 3" Risers of Tanks 241-AY-101/102

The subject document has been reviewed by the undersigned.
The reviewer reviewed and verified the following items as applicable

Documents Reviewed: Structural Analysis for Proposed ENRAF Installation on 3" Risers of Tanks 241-AY-101/102 (Calculations 14 pgs), (Attachment A 11 pgs.), (Attachment B 2 pgs.), (Attachment C 4 pgs.), (Attachment D 3 pgs), (Attachment E 5 pgs), (Attachment F 3 pgs), (Attachment G 4 pgs), (Attachment H 2 pgs)

Analysis Performed By: Katasak Calibo

- Design Input
- Basic Assumption
- Approach/Design Methodology
- Related information
- Conclusion/Result Interpretation

Reviewer/Approver (print) Hassan H. Ziada

Reviewer/Approver (signature) Hassan H. Ziada Date 4-24-03

Subject: Structural Analysis for Proposed ENRAF Installation on 3" Risers of Tanks 241-AY-101/102
Originator: Katasak Calibo Date: 4/23/03
Checker: Greg Lisle Date: 4/23/03

Design Review Checklist for Simple Designs/Simple Design Changes (Routine Engineering Change Notices)

Subject: Structural Analysis for Proposed ENRAF Installation on 3" Risers of Tanks 241-AY-101/102

Originator: Katasak Calibo Date: 4/23/03
(Print/Sign)

Checker: Greg Lisle
Date: 4/23/03

This document consists of 14 pages and the following attachments (if applicable): (Attachment A 11 pgs.), (Attachment B 2 pgs.), (Attachment C 4 pgs.), (Attachment D 3 pgs), (Attachment E 5 pgs), (Attachment F 3 pgs), (Attachment G 4 pgs), (Attachment H 2 pgs)

Documents/Engineering Change Notices Reviewed:
Structural Analysis for Proposed ENRAF Installation on 3" Risers of Tanks 241-AY-101/102

Affected Documents: N/A

Yes	No	N/A	
[X]	[ ]	[ ]	Were the design inputs correctly selected?
[X]	[ ]	[ ]	Are assumptions necessary to perform the design activity adequately described and reasonable?
[ ]	[ ]	[X]	Where necessary, are the assumptions identified for subsequent re-verifications when the detailed design activities are completed?
[X]	[ ]	[ ]	Was an appropriate design method used?
[X]	[ ]	[ ]	Were the design inputs correctly incorporated into the design?
[X]	[ ]	[ ]	Is the design output reasonable compared to design inputs?
[ ]	[ ]	[X]	Are the necessary design input verification requirements for interfacing organizations specified in the design documents or in supporting procedures or instructions?

Checklist Completed By: Greg Lisle / Greg Lisle Date 4/23/03
(Print/Sign)

Subject: Structural Analysis for Proposed ENRAF Installation on 3" Risers of Tanks 241-AY-101/102
Originator: Katasak Calibo Date: 4/24/03
Checker: Greg Lisle Date: 4/24/03

TABLE OF CONTENTS

Objective/Purpose	2
Open Items	2
Method of Analysis	2
Input Data	2
Results	3
Conclusions	3
References	4
ENRAF Assembly Weights	9
Center of Gravity	10
Discussion on Riser Buried in Soil	11
Wind and Seismic Loading	11
Reducer Evaluation	12
Look at Riser Section at Grade for Stress Comparison	14

LIST OF ATTACHMENTS

Attachment A	FAX from David J. Born	11 pgs
Attachment B	Email from David J. Born	2 pgs
Attachment C	Cast Iron Reducer Specification	4 pgs
Attachment D	Specification for Class 150 Flanges	3 pgs
Attachment E	Specifications for Worcester Controls Full Bore Flanged Ball Valves	5 pgs
Attachment F	ECN-720173 R.0 and ECN-720174 R.0	3 pgs
Attachment G	Standards, ASME and ASTM	4 pgs
Attachment H	Email from Chuck Scaief	2 pgs

ANALYTICAL CALCULATIONS

Page _____ of _____

Subject: Structural Analysis for Proposed ENRAF Installation on 3" Risers of Tanks 241-AY-101/102
Originator: Katasak Calibo Date: 4/23/03
Checker: Greg Lisle Date: 4/23/03

OBJECTIVE/PURPOSE:

A proposed ENRAF level gauge assembly (ECN-720173, Attachment F), similar to a replacement ENRAF assembly per drawing H-2-817634, is to be installed on annulus risers -079, -083, and -087 of Tank 241-AY-101 (H-14-010506, Sht. 1) and annulus risers -079, -082, and -086 of Tank 241-AY-102 (H-14-010506, Sht. 3). The proposed ENRAF assembly differs from the replacement ENRAF assembly of drawing H-2-817634 with the introduction of a 7-in long 4-in to 3-in cast iron reducer just below the ball value assembly (See Attachment F). The reducer will provide the necessary transition from the replacement ENRAF assembly (4-in diameter) to the existing 3-in steel annulus risers of Tanks 241-AY-101/102 (H-14-010506). The reducer fitting increases the height by 7 inches and redistributes the center of the mass (C.G.) of the assembly to a different location. Additionally, the the reducer is made of cast iron and whose strength must be checked against NPH (Natural Phenomena Hazards) loading. NPH loading analysis was performed on the replacement ENRAF assembly per WHC-SD-WM-ANAL-028 as noted on drawing H-2-817634 Sht. 5. Due to the changes proposed per ECN-720173 (Attachment F), WHC-SD-WM-ANAL-028 will only be used as a reference. In order to determine the least load resistant component between the reducer and the riser, both the reducer and the 3-in riser pipe at grade will be evaluated at their critical sections. This analysis does not directly evaluate the structural integrity of the ENRAF component but only its effect on the reducer and riser.

OPEN ITEMS: None

METHODS OF ANALYSIS:

Apply simple handbook equations to evaluate the structural adequacy of Tank 241-AY-101/102 for proposed ENRAF installation using lateral loading requirements of TFC-ENG-STD-06. Evaluate bending and shear stresses in the 4-in. to 3-in cast iron reducer fitting, along with the 3-in steel riser from proposed ENRAF installation. Buckling of riser pipe is not an issue because of lateral restraint from soil. MathCAD with embedded AutoCAD sketches will be used to analyze and illustrate the analysis. All calculations are confirmed using either a hand held calculator or an alternate form of calculation.

INPUT DATA:

Safety Designation: Safety Significant , Performance Category 2 (PC2)	(Attachment H)
Riser-079 (Tank-241-AY-101) Elevation = 679.93 ft	(H-14-010506, Sht 1)
Riser-079 (Tank-241-AY-101) 11" above grade	(Attachment B)
Riser-083 (Tank-241-AY-101) Elevation = 679.98 ft	(H-14-010506, Sht 1)
Riser-083 (Tank-241-AY-101) 6" above grade	(Attachment B)
Riser-087 (Tank-241-AY-101) 4" below grade	(Attachment B)
Riser-079 (Tank-241-AY-102) Elevation = 679.95 ft	(H-14-010506, Sht 3)
Riser-079 (Tank-241-AY-102) 4" above grade	(Attachment B)
Riser-082 (Tank-241-AY-102) 4" below grade	(Attachment B and H-2-64406)
Riser-086 (Tank-241-AY-102) Elevation = 680.00 ft	(H-14-010506, Sht 3)
Riser-086 (Tank-241-AY-102) 5" above grade	(Attachment B)
Weight of ENRAF Nonius = 37 lbs	(Attachment A)
Weight of 4" Schedule 40 pipe = 10.79 lbs/ft	(ASD, p. 1-93)
Weight of spray nozzle assembly = 2 lbs (Conservatively estimated based on 6.5" lg solid steel round weight)	(Estimated)

ANALYTICAL CALCULATIONS

Page ____ of ____

Subject: Structural Analysis for Proposed ENRAF Installation on 3" Risers of Tanks 241-AY-101/102
Originator: Katasak Calibo Date: 4/24/03
Checker: Greg Lisle Date: 4/24/03

Weight of 4" to 3" reducer fitting = 44 lbs (Conservatively estimated using available class 250 weight)		(Attachment C)
Weight of 4", 150# Blind Flange (unaltered, conservative) = 17 lbs		(Attachment D)
Weight of 4", 150# Slip-on Flange = 13 lbs		(Attachment D)
Weight of Site Glass Assembly = 42 lbs		(Attachment A)
Weight of Ball Value assembly = 110 lbs		(Attachment E)
3" Schedule 40 pipe riser material	ASTM A106 Grade B	(H-2-31750 Sht. 7 and H-2-64419 Sht. 1)
ASTM A106 Grade B Fy=35,000 psi		(Attachment G)
Weight of 3" Schedule 40 pipe = 7.58 lbs/ft		(ASD, p. 1-93)
4" to 3" Class 150 reducer material:	ASTM A126 Grade A (Gray Cast Iron)	(Attachment G)
ASTM A126 Grade A Fu=21,000 psi		(Attachment G)

RESULTS:

The proposed addition of the 7-in long, 4-in to 3-in cast iron reducer (Figures 1 thru 3) resulted in an elevation increase to the ENRAF assembly above the 3-in riser. The total weight of the above ground assembly is 317 lbs. The center of gravity relative to grade and to the centerline of the stack are 0.93-in away from the centerline and 33.57-in above grade. The governing seismic load per UBC-97, Equation 30-5 was 126 lbf. This resulted in bending stresses in the 4-in to 3-in cast-iron reducer and the 3-in riser to be 870.7 psi and 2,455.3 psi, respectively. The allowable bending stresses on the 4-in to 3-in cast-iron reducer and the 3-in riser were determined to be 2,100 psi and 23,100 psi, respectively. A shear stress check was performed on the 4-in to 3-in cast-iron reducer due to its relatively high bending stress compared to its allowable bending stress. By inspection, the shear stress in the 3-in riser was low in comparison to the bending stresses and did not warrant evaluation. The maximum combined beam shearing stress on the 4-in to 3-in reducer was determined to be 81.4 psi as compared to the allowable shear stress of 1,400 psi.

CONCLUSIONS:

The limiting component of the proposed ENRAF assembly was determined to be the 4-in to 3-in cast-iron reducer. The bending stress design margin for the 4-in to 3-in reducer was determined to be 1.41, while the bending stress design margin for the 3-in riser was determined to be 8.41. The design margin for the shear stresses of the 4-in to 3-in cast-iron reducer was determined to be 16.2. This analysis is therefore considered applicable to 3-in risers of lengths up to 12 inches above grade with a minimum below grade 3-in riser lengths of 16 feet.

Additionally, wind and seismic loading on the ENRAF unit has been evaluated by L.J.Julyk for the dome load evaluation of Catch Tank-241-A-302B (IOM 7M100-00-AHF-005) and was determined that seismic loading controls over wind loading by a large margin. Therefore, wind loading was not evaluated. (RPP-11449)

Furthermore, with approximately 16 ft of soil (H-2-64419) to resist loading and the design configuration of the riser attachment to the dome, it is engineering judgment that the additional load from the proposed ENRAF assembly will not cause local stress issues on the tank dome and therefore did not warrant evaluating. (RPP-11449)

ANALYTICAL CALCULATIONS

Page _____ of _____

Subject: Structural Analysis for Proposed ENRAF Installation on 3" Risers of Tanks 241-AY-101/102
Originator: Katasak Calibo Date: 4/23/03
Checker: Greg Lisle Date: 4/23/03

REFERENCES

ASD, 1989, *Manual of Steel Construction-Allowable Stress Design*, 9th edition, American Institue of Steel Construction, Inc., Chicago, Illinois.

ASME B16.1-98, 1998, *Cast Iron Pipe Flanges and Flanged Fittings*, American Society of Mechanical Engineers, New York, New York.

ASME B31.3-99, 1999, *Process Piping*, American Society of Mechanical Engineers, New York, New York.

ASTM, 2000, *Annual Book of ASTM Standards*, American Society of Testing and Materials, Philadelphia, PA.

Avallone, E. A.,et. al. , 1996, *Marks' Standard Handbook for Mechanical Engineers*, McGraw-Hill, New York, New York.

Budynas, R.G. and Young W.C., 2002, *Formulas for Stress and Strain*, 7th Edition, McGraw-Hill Book Company, New York, New York.

H-2-31750, Sht. 7, Piping Material Code M-7, Rev. 4, dated 1998, Lockheed Martin Hanford Corp., Richland, Washington.

H-2-64406, Sht. 1, *Piping Plan Tk-102 241-AY Tank Farm*, Rev. 13, dated 2001, Department of Energy, Richland, Washington.

H-2-64419, Sht. 1, *Tank Riser Details*, Rev. 17, dated 2002, Department of Energy, Richland, Washington.

H-2-64448, *Tank Penetration Details*, Rev. 4, dated 1970, Vitro Hanford Engineering Services, Richland, Washington.

H-2-817634, Sht. 1, *Instm ENRAF Nonius Assy Installation & Riser Sched*, Rev. 15, dated 2000, Kaiser Engineering Hanford Company, Richland, Washington.

H-2-817634, Sht. 2, *Instm ENRAF Nonius Assy Installation & Riser Sched*, Rev. 10, dated 2000, Kaiser Engineering Hanford Company, Richland, Washington.

H-2-817634, Sht. 3, *Instm ENRAF Nonius Assembly Installation & Riser Schedule*, Rev. 3, dated 1999, Westinghouse Hanford Company, Richland, Washington.

H-2-817634, Sht. 4, *Instm ENRAF Nonius Assembly Installation & Riser Schedule*, Rev. 4, dated 1999, Westinghouse Hanford Company, Richland, Washington.

H-2-817634, Sht. 5, *Instm ENRAF Nonius Assy Installation & Riser Schedule*, Rev. 9, dated 2000, Lockheed Martin Hanford Corp., Richland, Washington.

H-2-817634, Sht. 6, *Inst ENRAF Nonius Assy Installation & Riser Schedule*, Rev. 22, dated 2003, Department of Energy Office of River Protection, Richland, Washington.

H-2-817634, Sht. 7, *Inst ENRAF Nonius Assy Installation & Riser*, Rev. 0, dated 2000, Department of Energy, Richland, Washington.

ANALYTICAL CALCULATIONS

Page ____ of ____

Subject: Structural Analysis for Proposed ENRAF Installation on 3" Risers of Tanks 241-AY-101/102
Originator: Katasak Calibo Date: 4/23/03
Checker: Greg Lisle Date: 4/23/03

H-14-010506, Sht. 1, *Dome Penetration Schedules (WST/WSTA) Tank 241-AY-101*, Rev. 4, dated 2002, Department of Energy, Richland, Washington.

H-14-010506, Sht. 2, *Dome Penetration Schedules (WST/WSTA) Tank 241-AY-101*, Rev. 1, dated 2000, Department of Energy, Richland, Washington.

H-14-010506, Sht. 3, *Dome Penetration Schedules (WST/WSTA) Tank 241-AY-102*, Rev. 3, dated 2002, Department of Energy, Richland, Washington.

H-14-010506, Sht. 4, *Dome Penetration Schedules (WST/WSTA) Tank 241-AY-102*, Rev. 1, dated 2000, Department of Energy, Richland, Washington.

Julyk, L. J., 2000, *Catch Tank 241-A-302B Dome Load Evaluation for Proposed ENRAF Installation on 4-Inch Riser*, Interoffice Memo 7M100-00-AHF-005, to C. M. Lewis, dated December 21, 2000, CH2MHILL Hanford Group, Inc., Richland, Washington.

RPP-11449, 2002, *Catch Tank 241-TX-302B Dome Load Evaluation for Proposed ENRAF Installation on 4-inch Riser*, Rev. 0, CH2MHILL Hanford Group, Inc. Richland, Washington

TFC-ENG-STD-06, 2002, *Design Loads for Tank Farm Facilities,* Rev. A, CH2MHILL Hanford Group, Inc. Richland, Washington.

UBC, 1997, *Uniform Building Code*, International Conference of Building Officials, Whittier, California.

WHC-SD-WM-ANAL-028, 1994, *Level Gauge Seismic/Structural Analysis Review*, Rev. 0, Westinghouse Hanford Company, Richland, Washington.

ANALYTICAL CALCULATIONS

Page _____ of _____

Subject: Structural Analysis for Proposed ENRAF Installation on 3" Risers of Tanks 241-AY-101/102
Originator: Katasak Calibo Date: 4/23/03
Checker: Greg Lisle Date: 4/23/03

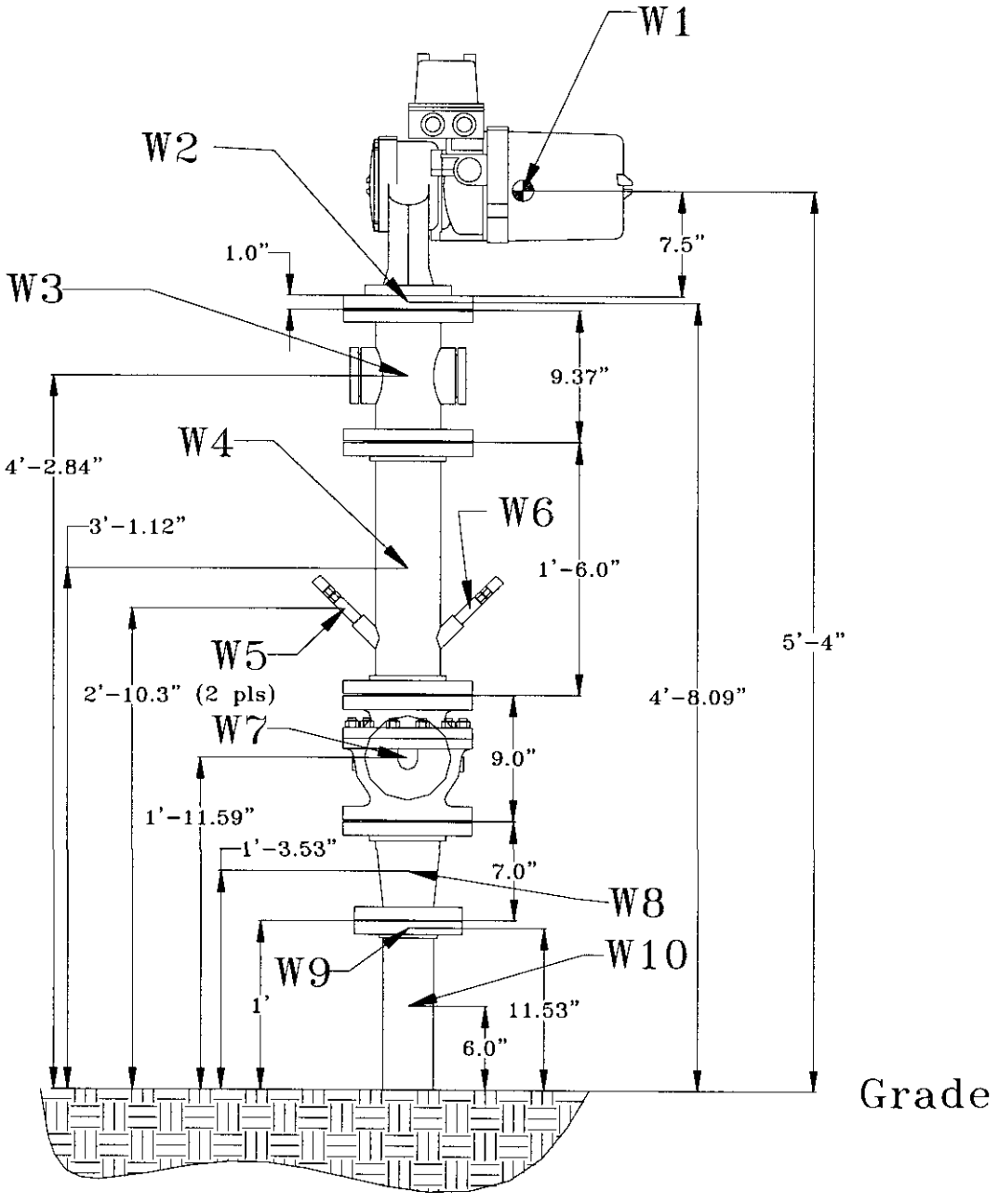

Figure 1. ENRAF Assembly on 3" Riser on Tanks 241-AY-101 and 241-AY-102 (Vertical dimension of weight components, includes 1/16" gasket between flanges).

ANALYTICAL CALCULATIONS

Page ____ of ____

Subject: Structural Analysis for Proposed ENRAF Installation on 3" Risers of Tanks 241-AY-101/102
Originator: Katasak Calibo Date: 4/23/03
Checker: Greg Lisle Date: 4/23/03

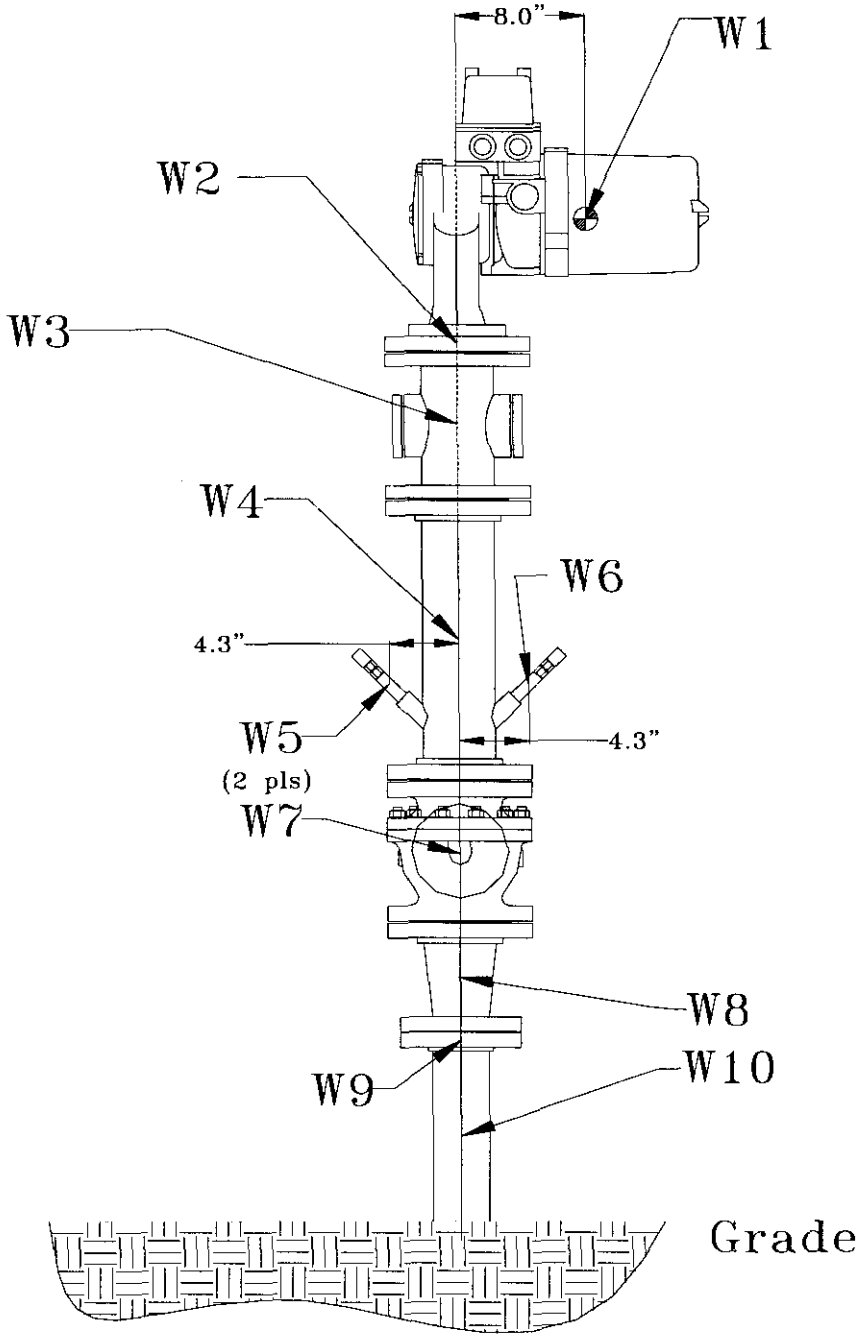

Figure 2. ENRAF Assembly on 3" Riser on Tanks 241-AY-101 and 241-AY-102
(Horizontal dimension of weight components).

ANALYTICAL CALCULATIONS

Page _____ of _____

Subject: Structural Analysis for Proposed ENRAF Installation on 3" Risers of Tanks 241-AY-101/102
Originator: Katasak Calibo Date: 4/23/03
Checker: Greg Lisle Date: 4/23/03

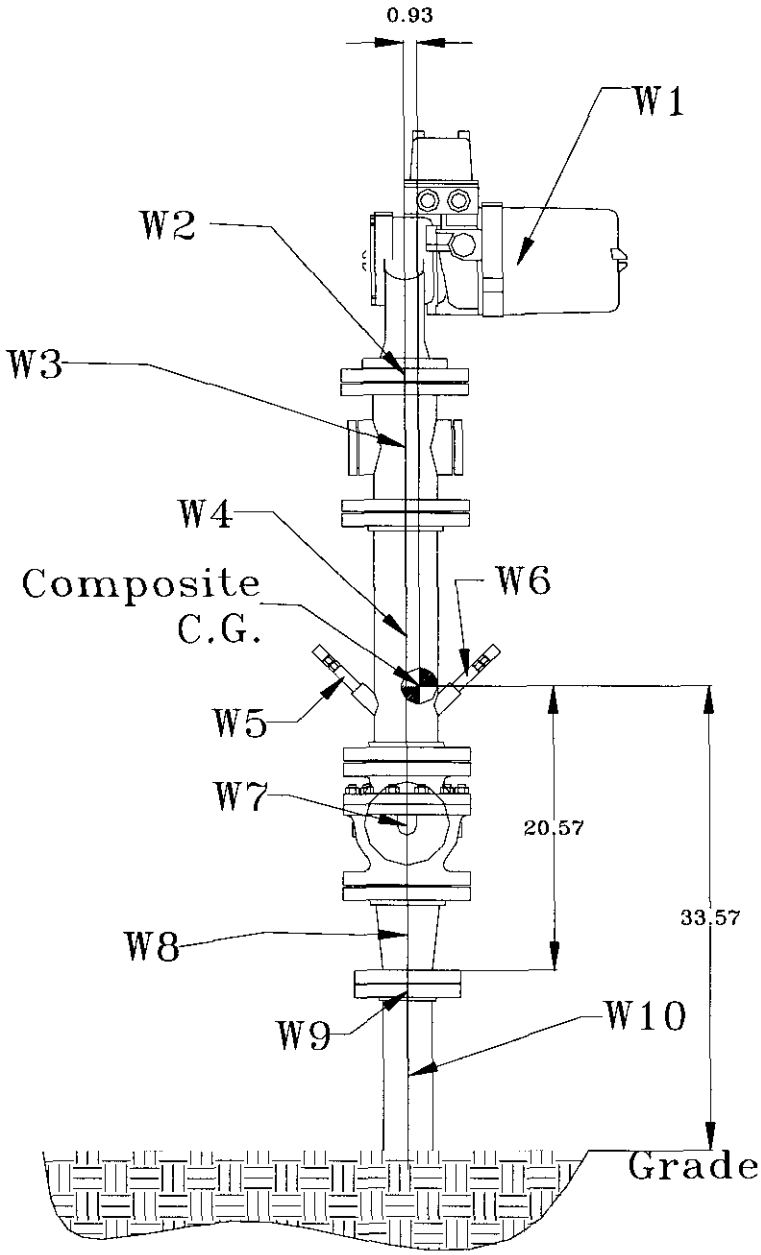

Figure 3. ENRAF Assembly on 3" Riser on Tanks 241-AY-101 and 241-AY-102 (Overall Assembly Center of Gravity).

ANALYTICAL CALCULATIONS

Page _____ of _____

Subject: Structural Analysis for Proposed ENRAF Installation on 3" Risers of Tanks 241-AY-101/102
Originator: Katasak Calibo Date: 4/23/03
Checker: Greg Lisle Date: 4/23/03

ENRAF ASSEMBLY WEIGHTS

Figures 1 thru 3 depict the proposed ENRAF assembly configuration. The figures were developed in AutoCAD from sketches provided by the Cognizant Engineer and subsequently detailed for this analysis.

Weight of ENRAF Nonius = 37 lbs

Weight of 4" Schedule 40 pipe = 10.79 lbs/ft

Weight of spray nozzle assembly = 2 lbs (Conservatively estimated based on 6.5" lg solid steel round weight)

Weight of 4" to 3" reducer fitting = 44 lbs (Conservatively estimated using available class 250 weight)

Weight of 4", 150# Blind Flange (Unaltered, conservative) = 17 lbs

Weight of 4", 150# Slip-on Flange = 13 lbs

Weight of Site Glass Assembly = 42 lbs

Weight of Ball Value assembly = 110 lbs

Weight of 3" Schedule 40 pipe = 7.58 lbs/ft

Component Weights

See Figures 1 and 2 for location of loads

W_1 is proposed ENRAF	(Attachment A)	$W_1 := 37 \cdot lbf$
W_2 is 4" blind flange	(Attachment D)	$W_2 := 17 \cdot lbf$
W_3 is sight glass assembly	(Attachment A)	$W_3 := 42 \cdot lbf$
W_4 is spool assembly (2- 4" Slip-on flanges and 1-4" pipe)	$W_4 := 1.5 \cdot ft \cdot \left(10.79 \cdot \frac{lbf}{ft}\right) + 2 \cdot (13 \cdot lbf)$	$W_4 = 42\,lbf$
W_5 is one spray nozzle	(Estimated, conservative)	$W_5 := 2 \cdot lbf$
W_6 is one spray nozzle	(Estimated, conservative)	$W_6 := 2 \cdot lbf$
W_7 is a ball value assembly	(Attachment E)	$W_7 := 110 \cdot lbf$
W_8 is 4" to 3" reducer	(Attachment C)	$W_8 := 44 \cdot lbf$
W_9 is 4" slip-on flange	(Attachment D)	$W_9 := 13 \cdot lbf$
W_{10} is 3" Sched 40 Steel Pipe	$W_{10} := (1 \cdot ft) \cdot \left(7.58 \cdot \frac{lbf}{ft}\right)$	$W_{10} = 7.58\,lbf$

Total Weight

$$W_t := W_1 + W_2 + W_3 + W_4 + W_5 + W_6 + W_7 + W_8 + W_9 + W_{10}$$

$$W_t = 317\,lbf$$

ANALYTICAL CALCULATIONS

Page _____ of _____

Subject: Structural Analysis for Proposed ENRAF Installation on 3" Risers of Tanks 241-AY-101/102
Originator: Katasak Calibo Date: 4/23/03
Checker: Greg Lisle Date: 4/23/03

CENTER OF GRAVITY

See Figures 1 and 2 for distances to component/assembly CG's

The center of gravity along the x-axis = CG_x and the center of gravity along the y-axis = CG_y of the entire assembly. (See Figure 3)

The equation for determining the center of gravity incorporates 10 separate weights. Each weight along with its respective distance to the axis with which the center of gravity is taken is determined separately then combined.

$d_{1x} := (8 \cdot in) \cdot W_1 \quad d_{1x} = 296\,in \cdot lbf$

$d_{2x} := (0 \cdot in) \cdot W_2 \quad d_{2x} = 0\,in \cdot lbf$

$d_{3x} := (0 \cdot in) \cdot W_3 \quad d_{3x} = 0\,in \cdot lbf$

$d_{4x} := (0 \cdot in) \cdot W_4 \quad d_{4x} = 0\,in \cdot lbf$

$d_{5x} := (-4.3 \cdot in) \cdot W_5 \quad d_{5x} = -8.6\,in \cdot lbf$

$d_{6x} := (4.3 \cdot in) \cdot W_6 \quad d_{6x} = 8.6\,in \cdot lbf$

$d_{7x} := (0 \cdot in) \cdot W_7 \quad d_{7x} = 0\,in \cdot lbf$

$d_{8x} := (0 \cdot in) \cdot W_8 \quad d_{8x} = 0\,in \cdot lbf$

$d_{9x} := (0 \cdot in) \cdot W_9 \quad d_{9x} = 0\,in \cdot lbf$

$d_{10x} := (0 \cdot in) \cdot W_{10} \quad d_{10x} = 0\,in \cdot lbf$

$$CG_x := \frac{\left(d_{1x} + d_{2x} + d_{3x} + d_{4x} + d_{5x} + d_{6x} + d_{7x} + d_{8x} + d_{9x} + d_{10x}\right)}{W_t} \quad CG_x = 0.93\,in$$

$d_{1y} := (64 \cdot in) \cdot W_1 \quad d_{1y} = 2368\,in \cdot lbf$

$d_{2y} := (56.09 \cdot in) \cdot W_2 \quad d_{2y} = 954\,in \cdot lbf$

$d_{3y} := (50.84 \cdot in) \cdot W_3 \quad d_{3y} = 2135\,in \cdot lbf$

$d_{4y} := (37.12 \cdot in) \cdot W_4 \quad d_{4y} = 1566\,in \cdot lbf$

$d_{5y} := (34.3 \cdot in) \cdot W_5 \quad d_{5y} = 68.6\,in \cdot lbf$

$d_{6y} := (34.3 \cdot in) \cdot W_6 \quad d_{6y} = 68.6\,in \cdot lbf$

$d_{7y} := (23.59 \cdot in) \cdot W_7 \quad d_{7y} = 2595\,in \cdot lbf$

$d_{8y} := (15.53 \cdot in) \cdot W_8 \quad d_{8y} = 683\,in \cdot lbf$

$d_{9y} := (11.53 \cdot in) \cdot W_9 \quad d_{9y} = 150\,in \cdot lbf$

$d_{10y} := (6 \cdot in) \cdot W_{10} \quad d_{10y} = 45\,in \cdot lbf$

$$CG_y := \frac{\left(d_{1y} + d_{2y} + d_{3y} + d_{4y} + d_{5y} + d_{6y} + d_{7y} + d_{8y} + d_{9y} + d_{10y}\right)}{W_t} \quad CG_y = 33.57\,in$$

ANALYTICAL CALCULATIONS

Page _____ of _____

Subject: Structural Analysis for Proposed ENRAF Installation on 3" Risers of Tanks 241-AY-101/102
Originator: Katasak Calibo Date: 4/23/03
Checker: Greg Lisle Date: 4/23/03

DISCUSSION ON RISER BURIED IN SOIL

Risers -79, -83 and -87 on Tank AY-101 and risers -79, -82 and -86 are located around the perimeter of the dome. Of the six risers mentioned, Riser -79 of Tank 241-AY-101 is 11 inches above grade (Attachment B). Conservatively, this analysis will use the above grade riser height of 12 inches as the worst case. Drawings H-2-64419 Sht. 1 and H-2-64448 shows the design configuration of the 3" riser and how it is cast into the concrete dome of the tank. With approximately 16 ft of soil to resist loading and the design configuration of the riser attachment to the dome, it is engineering judgment that the additional load from the proposed ENRAF assembly will not cause local stress issues on the tank dome and therefore does not warrant evaluating. (See RPP-11449)

The riser will be evaluated to seismic and wind loading and treated as a fixed condition at grade level.

WIND AND SEISMIC LOADING

Wind and seismic loading on the ENRAF unit has been evaluated by L.J.Julyk for the dome load evaluation of Catch Tank-241-A-302B (IOM 7M100-00-AHF-005) and was determined that seismic loading controls over wind loading by a large margin. Therefore, wind loading will not be evaluated.

Seismic loading is in accordance with UBC-97, with an importance factor for an essential facility in accordance with Performance Category 2 (PC2) criteria.

Seismic load shall be determined from the following equations: 30-4, 30-5, 30-6, or 34-2

$I := 1.25$ (UBC-97, Table 16-K, Pg. 2-30,) ✓
(Essential Facilities, PC-2)
(TFC-ENG-STD-06, Sect. 3.6.5.1)

Soil Type = S_D (UBC-97, Sect. 1636.2, Pg. 2-23)

$C_a := .28$ (UBC-97, Table 16-Q, Pg. 2-34)

$C_v := .40$ (UBC-97, Table 16-R, Pg. 2-35)

$R := 2.2$ (UBC-97, Table 16-P, Pg. 2-34)

$h_n = CG_y$ $h_n := 2.8$

$C_t := .035$ (UBC-97, Equation 30-8, Page 2-14)

$T := C_t \cdot (h_n)^{.75}$ $T = 0.076$ (UBC-97, Equation 30-8, Page 2-14)

Equation 30-4

$$V_1 := \left[\frac{(C_v \cdot I)}{(R \cdot T)}\right] \cdot W_t \qquad V_1 = 950.3\,\text{lbf}$$

Equation 30-5 Seismic load need not exceed this value

$$V_2 := \left[\frac{(2.5 \cdot C_a \cdot I)}{R}\right] \cdot W_t \quad V_2 = 126\,\text{lbf}$$

Equation V_2 governs for seismic loading

Equation 30-6 Seismic load shall not be less than this value

$$V_3 := .11 \cdot C_a \cdot I \cdot W_t \qquad V_3 = 12.2\,\text{lbf}$$

Equation 34-2 Seismic load shall not be less than this value

$$V_4 := .56 \cdot C_a \cdot I \cdot W_t \qquad V_4 = 62.1\,\text{lbf}$$

ANALYTICAL CALCULATIONS

Page _____ of _____

Subject: Structural Analysis for Proposed ENRAF Installation on 3" Risers of Tanks 241-AY-101/102
Originator: Katasak Calibo Date: 4/23/03
Checker: Greg Lisle Date: 4/23/03

REDUCER EVALUATION

$y_{reducer} := 20.57 \cdot in$ (Distance from C.G. of Combined Assembly, See Figure 3)

Moment due to Dead Load

$M_{DL} := W_t \cdot CG_x \quad M_{DL} = 296.0 in \cdot lbf$

Moment due to Seismic X

$M_{Sx} := V_2 \cdot y_{reducer} \quad M_{Sx} = 216.0 ft \cdot lbf$

Moment due to Orthogonal Effects (Seismic Z)

$M_{.30Msz} := .3 \cdot M_{Sz}$ (UBC-97, Sect. 1633.1, p. 2-19)

Moment due to Seismic Z

$M_{Sz} := V_2 \cdot y_{reduc} \quad M_{Sz} = 216.0 ft \cdot lbf$

Torque due to Seismic Z

$T_{Sz} := V_2 \cdot CG_x \quad T_{Sz} = 9.8 ft \cdot lbf$

Total Moment at reducer (UBC-97, Sect. 1612.2.1 Eq. 12-9 as directed by TFC-ENG-STD-06)

$$M_{tot.reducer} := M_{DL} + \frac{(M_{Sx} + M_{.30Msz})}{1.4}$$

$M_{tot.reducer} = 225.2 ft \cdot lbf$

Section Properties for 3" section of 4" to 3" Cast Iron Reducer

$ID_3 := 3 \cdot in \quad Thk_3 := .380 \cdot in$ (Thickness)

$OD_3 := ID_3 + 2(.380 \cdot in) \quad OD_3 = 3.76 in \quad c_3 := \frac{OD_3}{2} \quad c_3 = 1.88 in$

$A_3 := \frac{\pi \cdot OD_3^2}{4} - \frac{\pi \cdot ID_3^2}{4} \quad I_3 := \frac{\pi}{64}(OD_3^4 - ID_3^4) \quad S_3 := \frac{I_3}{c_3}$ (Avallone, p. 5-29)

$A_3 = 4.035 in^2 \quad I_3 = 5.835 in^4 \quad S_3 = 3.104 in^3$

4" to 3" Reducer Stresses

$f_b := \frac{M_{tot.reducer}}{S_3} \quad f_b = 870.7 psi$

Allowable Bending Stress for Cast-Iron
(ASME B31.3-99, Sect. 302.3.2.(b).(2))

$F_u := 21000 psi$ (ASTM A126 Class A, See Attachment G)

$F_b := .1 F_u \quad F_b = 2100 psi$

ANALYTICAL CALCULATIONS

Page _____ of _____

Subject: Structural Analysis for Proposed ENRAF Installation on 3" Risers of Tanks 241-AY-101/102
Originator: Katasak Calibo Date: 4/24/03
Checker: Greg Lisle Date: 4/24/03

Determine Design Margin for Cast-Iron reducer

$$DM_{bending} := \left(\frac{F_b}{f_b}\right) - 1 \qquad DM_{bending} = 1.41$$

Shear Stress Check for Cast-Iron reducer

(Only use 1/2 of pipe area to carry beam shear, conservative)

$$\tau := \frac{V_2}{.5 \cdot A_3} \qquad \tau = 62.4\,psi$$

Torsion Shear (Torsion due to Seismic Z, T_{Sz})

$$\tau_{torsion} := \frac{2T_{Sz} \cdot \left(\frac{OD_3}{2}\right)}{\pi\left[\left(\frac{OD_3}{2}\right)^4 - \left(\frac{ID_3}{2}\right)^4\right]}$$

(Budynas, Item 10, Table 10.1, p. 404)

$$\tau_{torsion} = 19.0\,psi$$

Maximum Combined Shear

$$\tau_{max} := \tau + \tau_{torsion} \qquad \tau_{max} = 81.4\,psi$$

Allowable Shear Stress

$$\tau_{all} := \frac{2}{3} \cdot F_b$$

(Conservative, ASD, Sect. F4, p. 5-148)

$$\tau_{all} = 1400\,psi$$

Determine Shear Design Margin for Cast-Iron reducer

$$DM_{bending} := \left(\frac{\tau_{all}}{\tau_{max}}\right) - 1 \qquad DM_{bending} = 16.2$$

ANALYTICAL CALCULATIONS

Page _____ of _____

Subject: Structural Analysis for Proposed ENRAF Installation on 3" Risers of Tanks 241-AY-101/102
Originator: Katasak Calibo Date: 4/23/03
Checker: Greg Lisle Date: 4/23/03

LOOK AT RISER SECTION AT GRADE FOR STRESS COMPARISON

The combined ENRAF Assemby and Riser will be evaluated as if fixed at grade level.

Moment due to Dead Load

$M_{DL} := W_t \cdot CG_x \quad M_{DL} = 296.0\,in \cdot lbf$

Moment due to Seismic X

$M_{Sx} := V_2 \cdot CG_y \quad M_{Sx} = 352.4\,ft \cdot lbf$

Moment due to Seismic Z

$M_{Sz} := V_2 \cdot CG_y \quad M_{Sz} = 352.4\,ft \cdot lbf$

Torque due to Seismic Z

$T_{Sz} := V_2 \cdot CG_x \quad T_{Sz} = 9.8\,ft \cdot lbf$

Moment due to Orthogonal Effects (Seismic Z)

$M_{.30Msz} := .3 \cdot M_{Sz}$ (UBC-97, Sect. 1633.1, p. 2-19)

Total Moment at reducer (UBC-97, Sect. 1612.2.1 Eq. 12-9 as directed by TFC-ENG-STD-06)

$$M_{tot.grade} := M_{DL} + \frac{\left(M_{Sx} + M_{.30Msz}\right)}{1.4}$$

$M_{tot.grade} = 351.9\,ft \cdot lbf$

Section Properties for 3" Schedule 40 A-106 Grade B (H-2-31750)

$A_{3.pipe} := 2.23 \cdot in^2$ (ASD, p. 1-93)

$S_{3.pipe} := 1.72 \cdot in^3$ (ASD, p. 1-93)

$F_y := 35000 \cdot psi$ (Attachment G)

$$f_b := \frac{M_{tot.grade}}{S_{3.pipe}} \quad f_b = 2455.3\,psi$$

Allowable Stress: Bending of Circular Tubes **(ASD, Sect. F3, eq. F3-1)**

$F_b := 0.66 F_y$

$F_b = 23100\,psi$

Design Margin for Riser

$$DM_{bending} := \left(\frac{F_b}{f_b}\right) - 1 \qquad DM_{bending} = 8.41$$

ATTACHMENT A

FAX from David J. Born

- ENRAF Level Gauge Installation Estimated Weights
- Weight of Sight Flow Indicator
- CHG Material Request

FAX COVER SHEET

Date: March 19, 2003

Page 1 of Pages (Coversheet included)

TO	FROM
Name: Calibo Katasak	Name: DAVID J. BORN
Fax Number To: 946-8700	Fax Number From: (509) 373-7606
Phone Number/Location:	Phone Number/Location: (509) 376-6939
Organization:	Organization: Upgrade Projects

Message

David Born
376-6939

CH2M MATERIAL REQUEST

Page 1 of 1

Date	Originator	Phone	Org. Code	CACN/COA
2/20/03	David J. Born	376-6939	7T400	500824/AF20

Deliver To	Date Required	Building	Tracking No.
Duane Shults	4/18/03	2715WA	

Item	Quantity	U/I	Description	Est. Cost	Safety Class	Quality Level	Approval Designator	Storage Level
1	~~12~~ 7 DJB	EA	REDUCER, CONCENTRIC, 4" TO 3", CAST IRON, 150 POUND FLANGED, FLAT FACED	200.00	GS	0	NA	C

Recommended Vendor(s):
Paramount Supply Co.
Kennewick, WA
546-4611

Quality Clauses:

Total Estimated Cost: $2,400

End Use: AY and AZ farm Leak Detection

Hazardous? ☐ Yes ☒ No Item No.: N/A

M.S.D.S. Required? ☐ Yes ☒ No Item No.: N/A

Date Ordered: Date Complete: Order Number:

Authorized By: Mike J. Adams (Director LEP) Date: 2/21/03

System/Component Engineer: [illegible] Date: 2/20/03

Quality Assurance: M.J. Adams Date: 2/21/03

Other: C.E. Snyder Date: 2/21/03

Safety: Date:

Other: David J. Born Date: 2/20/03

A-6003-017 (02/03)

CHG MATERIAL REQUEST

Page 1 of 1

Date	Originator	Phone	Org. Code	CACN/COA
2/10/03	David J. Born	376-6939	7T400	500824/AF20

Deliver To	Date Required	Building	Tracking No.
Duane Shults	4/18/2003	2715WA	

Item	Quantity	U/I	Description	Est. Cost	Safety Class	Quality Level	Approval Designator	Storage Level
1	12	EA	Valve, Ball, 4-inch, Class 150, RF Full Port, UHMWPE Seats and Seals. Worchester Controls Part No: 4" 818466U150N0113	1,700.00	GS	0	NA	C

Recommended Vendor(s):

Quality Clauses:

Total Estimated cost: $20,400

End Use: AY- and AZ- Leak Detection

Hazardous? ☐ Yes ☒ No Item No.: N/A

M.S.D.S. Required? ☐ Yes ☒ No Item No.: N/A

Date Ordered: Date Complete: Order Number:

Authorized By: Mike J. Ottom (Director LEP) Date: 2/21/03

System Engineer: [signature] Date: 2-19-03

Quality Assurance: W L Adams Date: 2/21/03

Other: C E Shuplen Date: 2/21/03

Safety: Date:

Other: David J. Born Date: 2-18-03

A-6003-017 (06/02)

CHG MATERIAL REQUEST

Page 1 of 1

Date	Originator	Phone	Org. Code	CACN/COA
2/10/03	David J. Born	376-6939	7T400	500824/AF20

Deliver To	Date Required	Building	Tracking No.
Duane Shults	4/18/03	2715WA	

Item	Quantity	U/I	Description	Est. Cost	Safety Class	Quality Level	Approval Designator	Storage Level
1	12	EA	DOUBLE WINDOW SITE FLOW INDICATOR, 4" FLANGED, CLASS 150, PLAIN, TEMPERED GLASS, ERNST WATER COLUMN & GAUGE CO, P/N 215-CS	800.00	GS	0	NA	C

Recommended Vendor(s):

Quality Clauses:

Total Estimated Cost: $9,600

End Use: AY and AZ farm Leak Detection

Hazardous? ☐ Yes ☒ No Item No.: N/A

M.S.D.S. Required? ☐ Yes ☒ No Item No.: N/A

Date Ordered: Date Complete: Order Number:

Authorized By: Mike J. Orton (LEP DIRECTOR) Date: 2/21/03

System Engineer: [illegible] Date: 2/19/03

Quality Assurance: W.L. Adams Date: 2/21/03

Other: C E Shipley Date: 2/21/03

Safety: Date:

Other: David J Born Date: 2-18-03

A-6003-017 (06/02)

CHG MATERIAL REQUEST

Page 1 of 1

Date	Originator	Phone	Org. Code	CACN/COA
2/10/03	David J. Born	376-6939	7T400	500824/AF20

Deliver To	Date Required	Building	Tracking No.
Duane Shults	4/18/03	2715WA	

Item	Quantity	U/I	Description	Est. Cost	Safety Class	Quality Level	Approval Designator	Storage Level
1	14	EA	GAUGE, LEVEL, SERVO, ENRAF MODEL NUMBER UEAZ854M21FDLC*W	11,000.00	GS	3	Q	B
2	1	EA	TEST WEIGHTS ENRAF PART NO.: 1854.061	275.00	GS	3	Q	B

Recommended Vendor(s):
Enraf,
4333 West Sam Houston Pky Suite 190
Houston, Texas 77043
(832) 467-3422 Andrew Bertrand

Quality Clauses:
B32

TOTAL ESTIMATED COST $155,000

End Use: AY- and AZ- Leak Detection

Hazardous? ☐ Yes ☒ No Item No.: N/A

M.S.D.S. Required? ☐ Yes ☒ No Item No.: N/A

Date Ordered: | Date Complete: | Order Number:

Authorized By: Mike J. Orton (Director LEP) Date: 2-21-03

System Engineer: [signature] Date: 2-19-03

Quality Assurance: W. Adams Date: 2/21/03

Other: C. E. Snyder Date: 2/21/03

Safety: Date:

Other: David J. Born Date: 2-18-03

A-6003-017 (06/02)

EFI SERIES 215 SIGHT FLOW INDICATORS

FLANGED CONNECTION / WINDOW TYPE
CONSTRUCTION: BRONZE, IRON, CARBON STEEL, STAINLESS STEEL OR PVC

Plain, Ball Action, Flapper, Drip Tube or Rotating Wheel

Pressure Rating: Annealed glass: 75 PSI,
Tempered glass: 200 PSI
*(*PVC 100 PSI with Tempered glass @ 75°F)*

- Bronze, Iron or PVC models have flat face flange connections.
- Carbon Steel or Stainless Steel models have raised face flanged connections.

** NOTE: PVC only available in Model EFI 215-P or 215-B. Teflon® gaskets standard with PVC. Consult EFI for PVC dimensions and weights.*

BRONZE OR IRON				
Flanged Conn.	Dimensions in Inches A	B	C	Approx. Weight (lbs.)
1	6-7/8	1-3/4	4-1/4	10
1-1/4	7-1/8	1-3/4	4-3/8	10
1-1/2	7-1/8	1-3/4	[illegible]	[illegible]
2	8-7/8	[illegible]	[illegible]	[illegible]
2-1/2	8-7/8	[illegible]	[illegible]	[illegible]
3	[illegible]	[illegible]	[illegible]	[illegible]
4	[illegible]	[illegible]	[illegible]	[illegible]

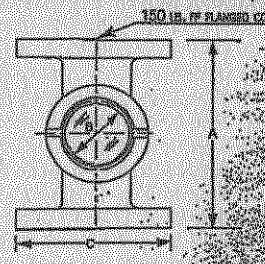

CARBON STEEL OR STAINLESS STEEL				
Flanged Conn.	Dimensions in Inches A	B	C	Approx. Weight (lbs.)
1	7-1/4	1-3/4	4-1/4	10
1-1/4	7-1/4	1-3/4	[illegible]	10
1-1/2	7-1/4	1-3/4	[illegible]	[illegible]
2	[illegible]	[illegible]	[illegible]	[illegible]
2-1/2	9-1/4	[illegible]	[illegible]	[illegible]
3	9-1/4	[illegible]	[illegible]	[illegible]
4	[illegible]	[illegible]	[illegible]	[illegible]

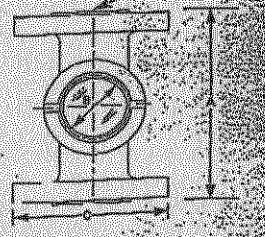

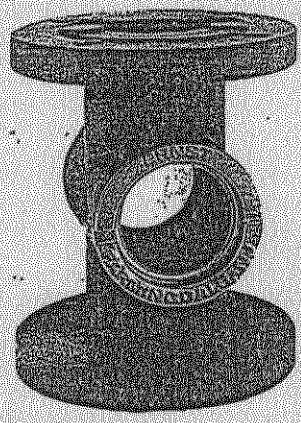

MODEL EFI 215-P (Plain)
MODEL EFI 215-B (Ball Action)
not shown...specify ball material

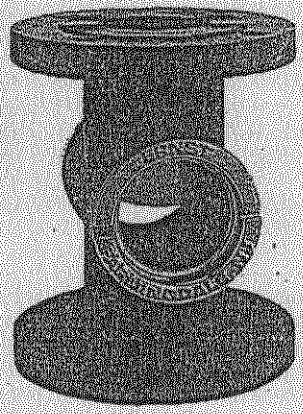

MODEL EFI 215-D
(Drip Tube)

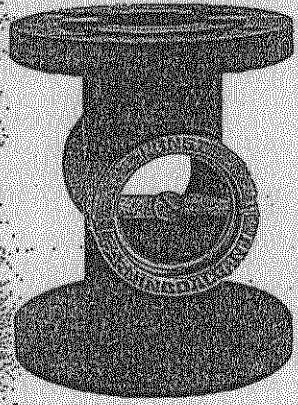

MODEL EFI 215-F
(Rynite® Flapper)
...not recommended for downward flow

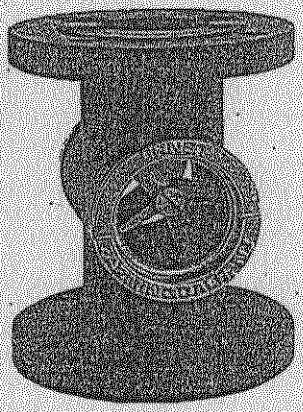

MODEL EFI 215-R
(Rynite® Rotating Wheel)

ERNST FLOW INDUSTRIES
P.O. Box 923 • Farmingdale, NJ 07727-0925 • TEL (732) 938-5641 • TOLL FREE 800-992-2843 • TOLL FREE FAX 888-992-2843
E-mail: info@ernstflow.com • www.ernstflow.com

ERNST®
FLOW INDUSTRIES

P. O. Box 925
116 Main Street
Farmingdale, NJ 07727-0925

Toll Free: 800-992-2843
Tel: 732-938-5641
Toll Free Fax: 888-992-2843

E-Mail: info@ernstflow.com
www.ernstflow.com

Catalog No. A002

Specializing in Processing and Industrial Plant Equipment

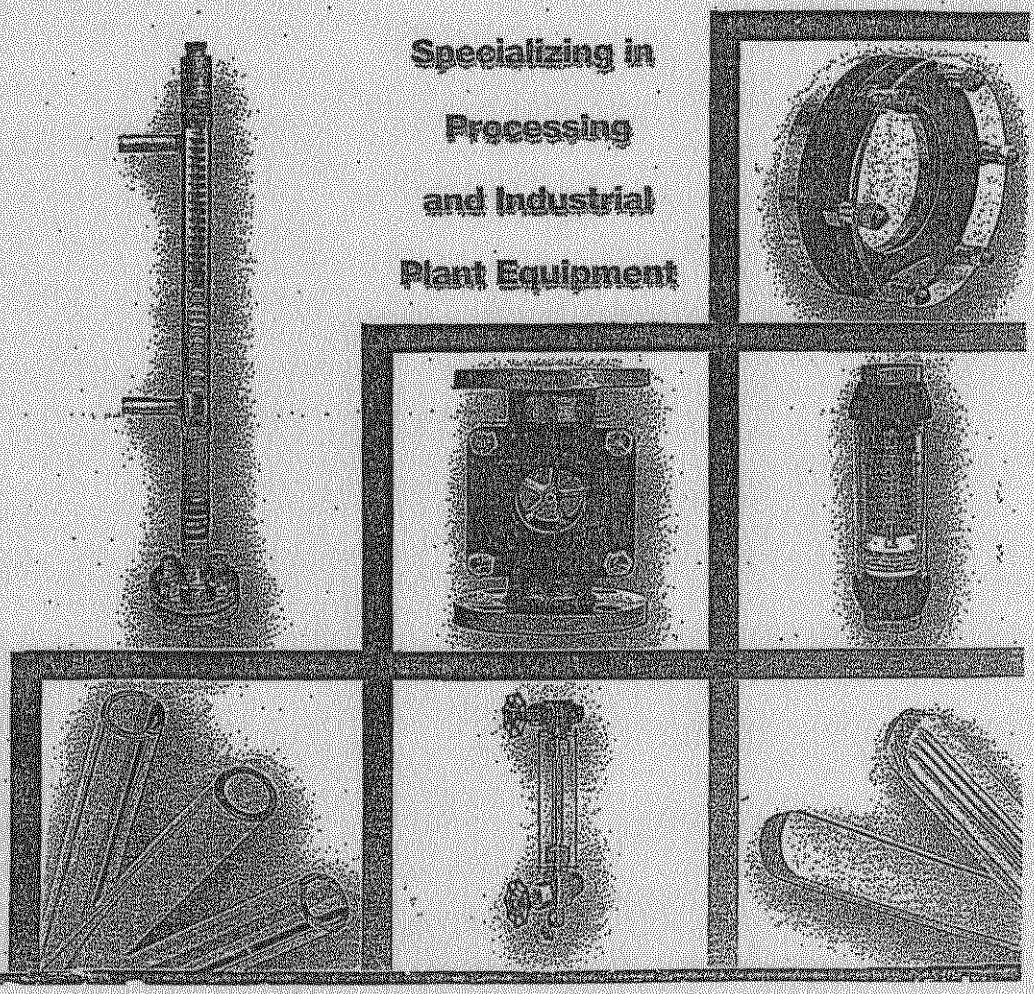

ENGINEERING CHANGE NOTICE CONTINUATION SHEET

Page 21 of 67

ECN W2I1-AP24-014
Date 7/6/98

Enraf Level Gauge Installation Estimated Weight		
Component	Weight	Total
	Sight Glass (estimated weight=31 lbs) ~~31.00~~ 42 ACTUAL	
	Modified Blind Flange (estimated) 17.00	
	Enraf Level Gauge 37.00	
	Bolts and Nuts 5/8-11 x 3" LG. (QTY=32) .49 lbs each estimated 15.68	
	Bolts and Nuts 5/8-11 x 1-1/2" LG (QTY=4) .36 lbs each estimated 1.44	
	Miscellaneous 5.00	
	Subtotal	238.31
Total		~~938.44~~

925.14

925.14

925.14

A-7900-013-4 (04/94) GEF094

ENGINEERING CHANGE NOTICE CONTINUATION SHEET

Page 20 of 67

ECN W211-AP24-014
Date 7/6/98

Enraf Level Gauge Installation Estimated Weight

Component	Weight		Total
	Screw 1/2-13 x 1.5" LG (QTY=64) .116 lbs each	7.42	
	Spring Nuts 1/2-13 (QTY=56) .12 lbs each	6.72	
	Flat Washers, 1/2" (QTY=64), .035 lbs each	2.24	
	Lock Washers, 1/2" (QTY=64), .013 lbs each	.83	
	NUT, 1/2"-13, (QTY=8), .048 lbs each	.38	
	Screw 1/4"-20 x 1.5" LG (QTY=8), .026 lbs each	.21	
	Flat Washers 1/4" (QTY=8) .008 lbs each	.06	
	Lock Washer 1/4" (QTY=8) .003 lbs each	.02	
	Spring Nut, 1/4"-20 (QTY=8) .07 lbs each	.56	
	Conduit, 3/4" (QTY=10 ft) 1.4 lbs/ft	14.00	
	Conduit Clamp, (QTY=4), .12 lbs each	.48	
	Myers Sealing Hub, (QTY=2), .3 lbs each	.60	
	EYS Conduit Seals (QTY=2) 2 lbs each	4.00	
	ECLK Coupling (QTY=2) .7 lbs each	1.40	
	Miscellaneous Fittings	5.00	
	Subtotal		139.11
Enraf Level Gauge Mechanical Assembly	Worcester 4" Ball Valve p/n 8246U150	81.00	
	18" Spool Piece (pipe=16.19 lbs, flange=12 lbs each, weldlets + fittigs= 5 lbs each estimated)	50.19	

A-7900-013-4 (04/94) GEF094

ENGINEERING CHANGE NOTICE CONTINUATION SHEET

Page 19 of 67

ECN W211-AP24-014
Date 7/6/98

Installation Weight:

Enraf Level Gauge Installation Estimated Weight			
Component	Weight		Total
Hand Switch	FSC27	4.60	
	DS185	0.36	
	DS1006	0.36	
	Fuse	0.10	
	Fuse Holder	0.30	
	Subtotal		5.72
Terminal Box	Enclosure	4.00	
	Panel	1.00	
	Internal Components	2.00	
	Subtotal		7
Junction Box	Enclosure	17.00	
	Panel	3.00	
	Internal Components	3.00	
	Subtotal		23
Concrete Footings (QTY=4) 128 lbs ea.			512
Electrical Stand	Unistrut P1001 Channel, Vertical Upright (QTY=2), 3.8 lbs/ft	38.00	
	Unistrut P1001 Channel, Horizontal Cross Bar, 22-3/8" LG (QTY=3), 3.8 lbs/ft	21.26	
	Unistrut P1000 Channel, Horizontal Cross Bar, 22-3/8" LG (QTY=4), 1.9 lbs/ft	14.17	
	Unistrut P1728 Ninety Degree Bracket (QTY=2), 1.54 lbs	3.08	
	Unistrut P2484W Ninety Degree Bracket (QTY=2), 1.34 lbs	2.68	
	Unistrut P1950 Cross Bracket (QTY=2), 2.4 lbs each	4.80	
	P1031 Tee Bracket (QTY=14), 0.8 lbs each	11.20	

A-7900-013-4 (04/94) GEF094

ATTACHMENT B

Email from David J. Born

Confirmation of "As-Is" Riser Heights

Calibo Katasak

From: Born, David J [David_J_Born@RL.gov]
Sent: Tuesday, March 25, 2003 3:04 PM
To: Calibo Katasak; Born, David J
Cc: Ulk, Paul F
Subject: RE: Confirmation of "As-Is" Riser Heights

Calibo,

The values listed below are correct.

NOTE: AY-102 Riser-82 4" below grade is an estimated value. It is below
grade, but we have not uncovered it yet.)

David Born
376-6939

-----Original Message-----
From: Calibo Katasak [mailto:KCalibo@LATA.com]
Sent: Tuesday, March 25, 2003 1:00 PM
To: 'David_J_Born@rl.gov'
Cc: 'Paul_F_Ulk@rl.gov'
Subject: Confirmation of "As-Is" Riser Heights

Dave,

Please confirm to the correctness of the the following information by replying to this correspondence. Per our phone conversation last week, the following are the "as-is" riser elevations:

241-AY-101
Riser-79 11" above grade
Riser-83 6" above grade
Riser-87 4" below grade

241-AY-102
Riser-79 4" above grade
Riser-82 4" below grade (Estimated: It is below grade, but we have not
uncovered it yet.)
Riser-86 5" above grade

Thanks.

ATTACHMENT C

- 4-in to 3-in Class 150 Cast Iron Reducer Specifications
- 4-in to 3-in Class 250 Cast Iron Reducer Specifications (Grinnell) (Conservatively estimated weight used for Class 150 Reducer)

SECTION 7

FLANGES, FLANGE UNIONS, COMPANION FLANGES, FLANGED FITTINGS

WARD flanged components are made with high quality iron and are designed to handle the tough service that flanged components normally experience. Precision machining and thread chamfering allows WARD flanged components to be easily installed. Most importantly, quality is built into the design, material and manufacturing of each of WARD's flanged components.

Cast iron flanges may have either a black or galvanized finish.

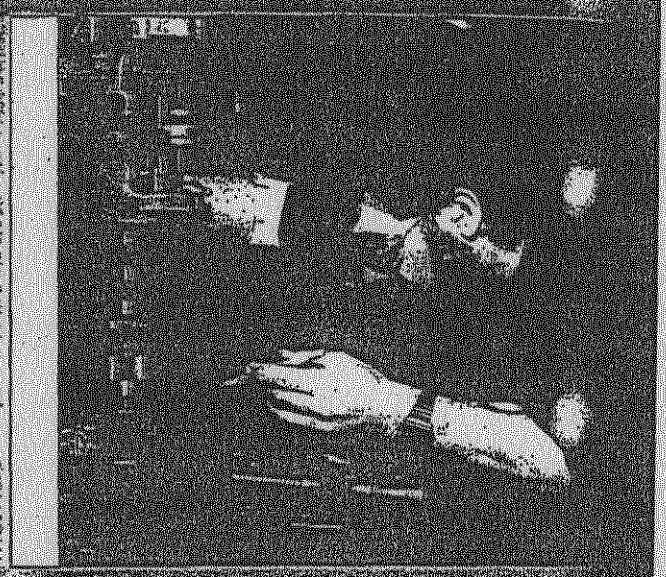

	FLANGES		HUB	BLIND FLANGES		BOLT HOLES		BOLTING			
NPS	Diameter of Flange O	Thickness of Flange, Min. Q	Diameter of Hub, Min. X	Length of Hub & Threads, Min. Y	Diameter of Port I	Wall Thickness V	Diameter of Bolt Circle	Diameter of Bolt Holes	Number of Bolts	Dia. of Bolts	Length of Bolts
1	4.25	0.44	1.94	0.69	1.00	0.38	3.12	0.62	4	0.50	2.00
1 1/4	4.62	0.50	2.31	0.81	1.25	0.44	3.50	0.62	4	0.50	2.00
1 1/2	5.00	0.56	2.56	0.88	1.50	0.50	3.88	0.62	4	0.50	2.00
2	6.00	0.62	3.06	1.00	2.00	0.56	4.75	0.75	4	0.62	2.50
2 1/2	7.00	0.69	3.56	1.12	2.50	0.63	5.50	0.75	4	0.62	2.50
3	7.50	0.75	4.25	1.19	3.00	0.69	6.00	0.75	4	0.62	2.50
3 1/2	8.50	0.81	4.81	1.25	3.50	0.75	7.00	0.75	8	0.62	1.00
4	9.00	0.94	5.31	1.31	4.00	0.88	7.50	0.75	8	0.62	1.00
5	10.00	0.94	6.44	1.44	5.00	0.88	8.50	0.88	8	0.75	3.00
6	11.00	1.00	7.56	1.56	6.00	0.94	9.50	0.88	8	0.75	3.50
8	13.50	1.12	9.69	1.75	8.00	1.06	11.75	0.88	8	0.75	3.50
10	16.00	1.19	11.94	1.94	10.00	1.12	14.25	1.00	12	0.88	4.00
12	19.00	1.25	14.06	2.19	12.00	0.81	17.00	1.00	12	0.88	4.00

Materials: ASTM A126
Dimensions: ANSI/ASME B 16.1
ANSI/ASME B 16.24
Coatings: ASTM A 153
Additional Specifications: Federal Spec. WWP-406
UL AND FM listed where applicable.

TOTAL P.02

CAST IRON FLANGED CONCENTRIC REDUCERS *

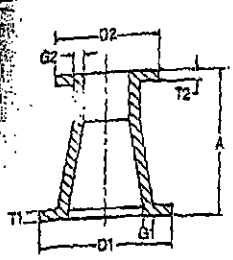

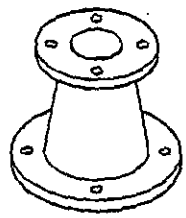

NPS	End to End Overall A	Flange Diameter D1	Flange Diameter D2	1st Flg. Thickness T1 (min)	2nd Flg. Thickness T2 (min)	1st Wall Thickness G1 (min)	2nd Wall Thickness G2 (min)
2 1/2 x 2"	5.500	7.000	6.000	0.690	0.620	0.310	0.310
3 x 2 1/2"	6.000	7.500	7.000	0.750	0.690	0.380	0.310
3 x 2"	6.000	7.500	6.000	0.750	0.620	0.380	0.310
4 x 3"	7.000	9.000	7.500	0.940	0.750	0.500	0.380
4 x 2 1/2"	7.000	9.000	7.000	0.940	0.690	0.500	0.310
4 x 2"	7.000	9.000	6.000	0.940	0.620	0.500	0.310
5 x 4"	8.000	10.000	9.000	0.940	0.940	0.500	0.500
6 x 5"	9.000	11.000	10.000	1.000	0.940	0.560	0.500
8 x 4"	9.000	11.000	9.000	1.000	0.940	0.560	0.500
6 [illegible]	9.000	11.000	7.500	1.000	0.750	0.560	0.380
6 x 2 1/2"	9.000	11.000	7.000	1.000	0.690	0.560	0.310
6 x 2"	9.000	11.000	6.000	1.000	0.620	0.560	0.310
8 x 6"	11.000	13.500	11.000	1.120	1.000	0.620	0.560
8 x 5"	11.000	13.500	10.000	1.120	0.940	0.620	0.500
8 x 4"	11.000	13.500	9.000	1.120	0.940	0.620	0.500
10 x 8"	12.000	16.000	13.500	1.190	1.120	0.750	0.620
10 x 6"	12.000	16.000	11.000	1.190	1.000	0.750	0.560
12 x 10"	12.000	19.000	16.000	1.250	1.190	0.810	0.750
12 x 8"	12.000	19.000	13.500	1.250	1.120	0.810	0.620
[illegible]	12.000	19.000	11.000	1.250	1.000	0.810	0.560

CAST IRON FLANGED ECCENTRIC REDUCERS *

NPS	Length K	Wall Thickness G1 Min	Wall Thickness G2 Min	Flange Thickness T1 Min	Flange Thickness T2 Min
3 x 2"	6.000	0.380	0.310	0.750	0.620
4 x 3"	7.000	0.500	0.380	0.940	0.750
4 x 2"	7.000	0.500	0.310	0.940	0.620
6 x 5"	9.000	0.560	0.500	1.000	0.940
6 x 4"	9.000	0.560	0.500	1.000	0.940
6 x 3"	9.000	0.560	0.380	1.000	0.750
8 x 6"	11.000	0.620	0.560	1.120	1.000
8 x 5"	11.000	0.620	0.500	1.120	0.940
8 x 4"	11.000	0.620	0.500	1.120	0.940
10 x 8"	12.000	0.750	0.620	1.190	1.120
10 x 6"	12.000	0.750	0.560	1.190	1.000
12 x 10"	14.000	0.810	0.750	1.250	1.190
12 x 8"	14.000	0.810	0.620	1.250	1.120

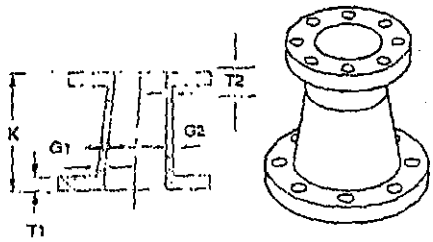

TOTAL P.02

cast iron flanged, (class 250)

tees *(continued)*

tee, reducing on run or outlet: fig. 842

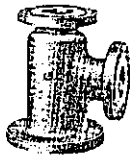

In describing tees, the run is first named, then the outlet, thus:

2 NPS / 50 DN

10 NPS / 250 DN | 8 NPS / 200 DN

= 10 X 8 X 6 NPS / *250 X 200 X 150 DN*

Dimensions for reducing tees for sizes listed 16 NPS / 400 DN and smaller have same center to face dimension as straight size fittings corre-sponding to the largest opening. Dimensions of sizes not listed furnished on request.

size, reducing NPS	DN	NPS	DN	NPS	DN	wgt (approx.) each lb	kg	size, reducing NPS	DN	NPS	DN	NPS	DN	wgt (approx.) each lb	kg
3	80	3	80	2½ 2	65 50	55 50	25.00 22.73	6	150	6	150	4 3	100 80	160 148	72.73 67.28
4	100	4	100	3 2½ 2	80 65 50	84 83 77	38.19 37.73 35.00	8	200	8	200	6 4	150 100	257 229	116.82 104.09
5	125	5	125	4	100	125	56.82	10	250	10	250	8 6	200 150	376 369	170.91 167.73

reducer

concentric reducer fig. 855

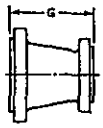

G: face to face

size NPS	DN	NPS	DN	G in	mm	wgt (approx.) each lb	kg	size NPS	DN	NPS	DN	G in	mm	wgt (approx.) each lb	kg
2½	65	2	50	5½	140	24	10.91	6	150	6 4 3 2½	125 100 80 65	9	225	85 77 67 63	38.64 35.00 30.46 28.64
3	80	2½ 2	65 50	6	150	29 25	13.19 11.37								
4	100	3 2½ 2	80 65 50	7	175	44 40 36	20.00 18.19 16.37	8	200	6 5 4	150 125 100	11	275	130 115 105	59.09 52.28 47.73
5	125	4 3 2½	100 80 65	8	200	63 54 50	28.64 24.55 22.73	10	250	8 6	200 150	12	300	190 170	86.37 77.28

Drilling templates are in multiples of four so that fittings may face in any quarter. Bolt holes straddle center line.

See note page pf-91.

ATTACHMENT D

Specifications for Class 150 Flanges

Flanges

CLASS 150 — ANSI B16.5

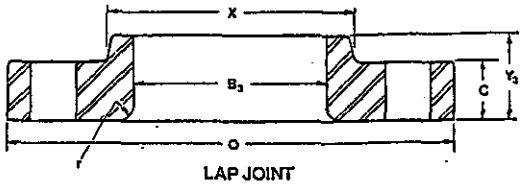

LAP JOINT

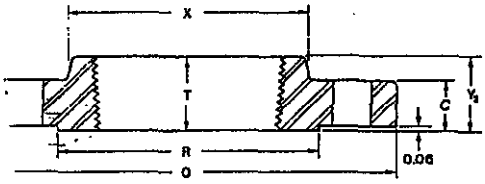

THREADED
½" THRU 3" ONLY

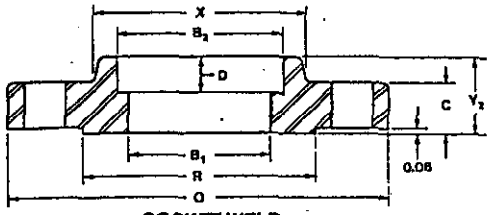

SOCKET WELD
½" THRU 3" ONLY #

Flange Thickness	Dia. Hub at Bevel	Fillet Radius	Drilling			Approx. Weight				Nominal Size
			Bolt Circle	Dia. Holes	No. Holes	Wldg. Neck	Slip-on Thrd. Sock.W.	Lap Joint	Blind	
C	A	r								
0.38	0.84	0.13	2.38	0.63	4	2	1	1	1	½
0.44	1.05	0.13	2.75	0.63	4	2	2	2	2	¾
0.50	1.32	0.13	3.13	0.63	4	3	2	2	2	1
0.56	1.66	0.19	3.50	0.63	4	3	3	3	3	1¼
0.63	1.90	0.25	3.88	0.63	4	4	3	3	4	1½
0.69	2.38	0.31	4.75	0.75	4	6	5	5	5	2
0.75	2.88	0.31	5.50	0.75	4	8	7	7	7	2½
0.81	3.50	0.38	6.00	0.75	4	10	8	8	9	3
0.88	4.00	0.38	7.00	0.75	8	12	11	11	13	3½
0.94	4.50	0.44	7.50	0.75	8	15	13	13	17	4
0.94	5.56	0.44	8.50	0.88	8	19	15	15	20	5
1.06	6.63	0.50	9.50	0.88	8	24	19	19	26	6
1.25	8.63	0.50	11.75	0.88	8	39	30	30	45	8
1.31	10.75	0.50	14.25	1.00	12	52	43	43	70	10
1.56	12.75	0.50	17.00	1.00	12	80	64	64	110	12
1.63	14.00	0.50	18.75	1.13	12	110	90	105	140	14
1.75	16.00	0.50	21.25	1.13	16	140	98	140	180	16
1.94	18.00	0.50	22.75	1.25	16	150	130	160	220	18
2.13	20.00	0.50	25.00	1.25	20	180	165	195	285	20
2.38	22.00	0.50	27.25	1.38	20	225	185	245	355	22
2.50	24.00	0.50	29.50	1.38	20	260	220	275	430	24

NOTE Sizes > 3" listed for reference.

Flanges

ANSI B16.5 CLASS 150

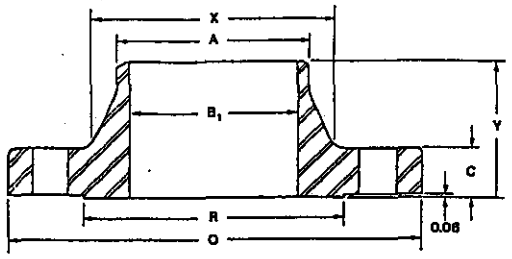

WELDING NECK

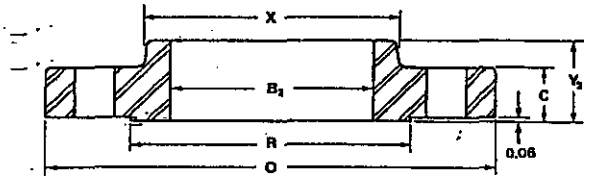

SLIP-ON

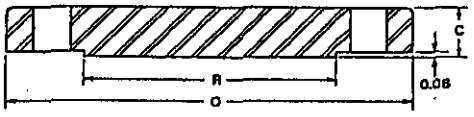

BLIND

Nominal Size	Common Dimensions				Bore			Length Thru Hub		
	Outside Dia. O	Thk. C	Raised Face Dia. R	Hub Dia. X	Welding* Neck Socket B_1	Slip-on Socket B_2	Lap Joint B_3	Welding Neck Y_1	Slip-on Threaded Socket Y_2, T	Lap Joint Y_3
½	3.50	0.44	1.38	1.19	0.62	0.88	0.90	1.88	0.63	0.63
¾	3.88	0.50	1.69	1.50	0.82	1.09	1.11	2.06	0.63	0.63
1	4.25	0.56	2.00	1.94	1.05	1.36	1.38	2.19	0.69	0.69
1¼	4.63	0.63	2.50	2.31	1.38	1.70	1.72	2.25	0.81	0.81
1½	5.00	0.69	2.88	2.56	1.61	1.95	1.97	2.44	0.88	0.88
2	6.00	0.75	3.63	3.06	2.07	2.44	2.46	2.50	1.00	1.00
2½	7.00	0.88	4.13	3.56	2.47	2.94	2.97	2.75	1.13	1.13
3	7.50	0.94	5.00	4.25	3.07	3.57	3.60	2.75	1.19	1.19
3½	8.50	0.94	5.50	4.81	3.55	4.07	4.10	2.81	1.25	1.25
4	9.00	0.94	6.19	5.31	4.03	4.57	4.60	3.00	1.31	1.31
5	10.00	0.94	7.31	6.44	5.05	5.66	5.69	3.50	1.44	1.44
6	11.00	1.00	8.50	7.56	6.07	6.72	6.75	3.50	1.56	1.56
8	13.50	1.13	10.63	9.69	7.98	8.72	8.75	4.00	1.75	1.75
10	16.00	1.19	12.75	12.00	10.02	10.88	10.92	4.00	1.94	1.94
12	19.00	1.25	15.00	14.38	12.00	12.88	12.92	4.50	2.19	2.19
14	21.00	1.38	16.25	15.75	13.25	14.14	14.18	5.00	2.25	3.13
16	23.50	1.44	18.50	18.00	15.25	16.16	16.19	5.00	2.50	3.44
18	25.00	1.56	21.00	19.88	17.25	18.18	18.20	5.50	2.69	3.81
20	27.50	1.69	23.00	22.00	19.25	20.20	20.25	5.69	2.88	4.06
22	29.50	1.81	25.25	24.25	21.25	22.22	22.25	5.88	3.13	4.25
24	32.00	1.88	27.25	26.13	23.25	24.25	24.25	6.00	3.25	4.38

* Standard Bore will be furnished unless otherwise specified.

ATTACHMENT E

Specifications for Worcester Controls
Full Bore Flanged Ball Values

PB 800-1

Worcester Controls

Series 818/828
Full Bore Flanged Ball Valves

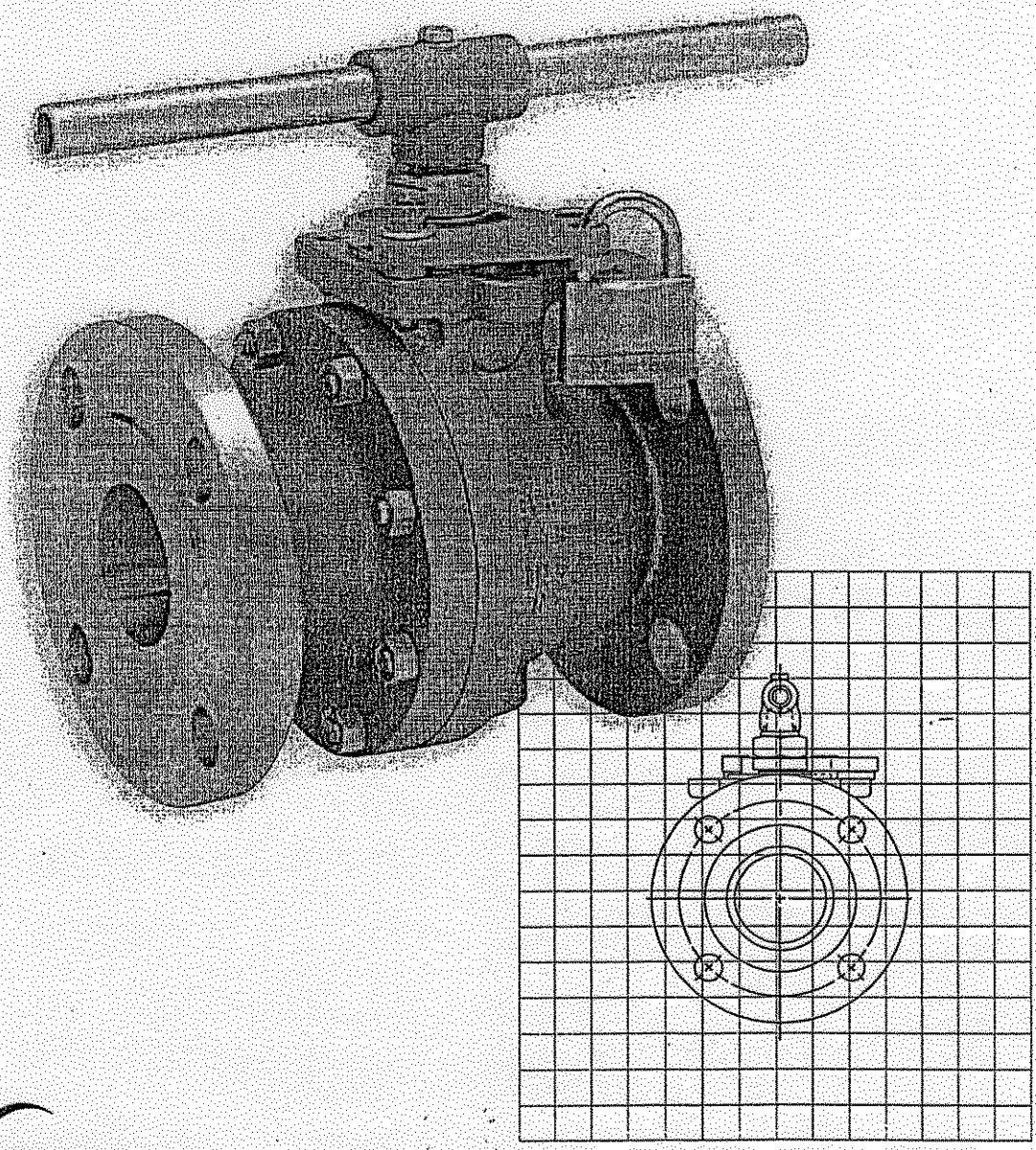

Invensys
Flow Control

www.worcestercc.com

AN ISO 9001 REGISTERED COMPANY

Worcester's all new full port ball valve features worldwide design standardization, fire-safety, OSHA lockout, ISO actuator mounting and best price and performance value.

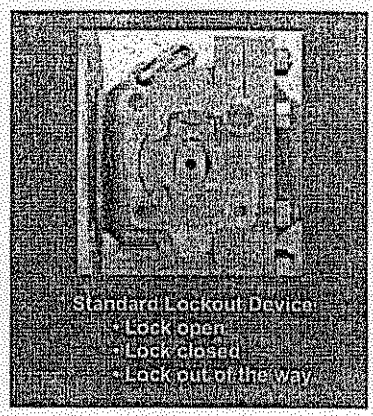

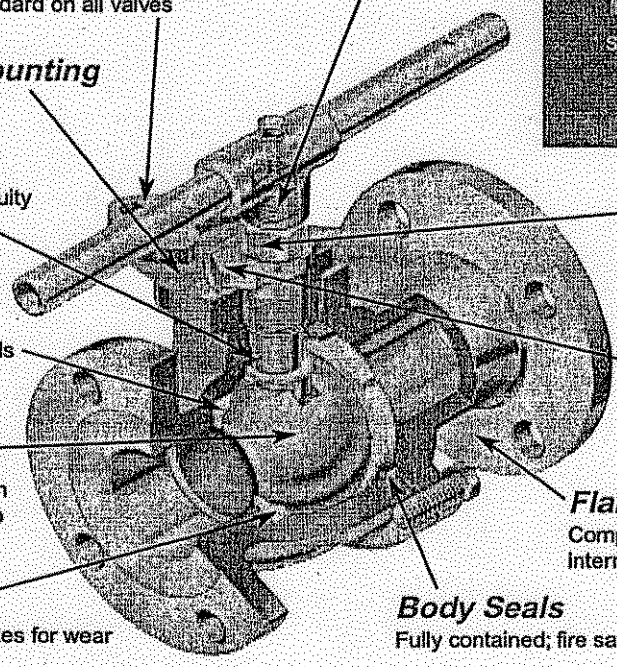

Anti-Blowout Stem

OSHA Lockout
Standard on all valves

Actuator Mounting
Per ISO 5211

Anti-Static Stem
Ensures electrical continuity between ball and body

Gland Nut
Does not need to be removed for actuator mounting

Seats
Wide range of seat materials

Stop Plate
Visual indication of ball position

Ball
316 stainless steel ball with pressure equalizing hole to balance cavity pressure

Flange Connectors
Comply with all major international standards

Seat Design
Automatically compensates for wear and thermal fluctuations

Body Seals
Fully contained; fire safe option

Specifications

Sizes:	2", 3", 4", 6", 8"
Standard Valve Model Numbers:	Series 818 ANSI Class 150 Series 828 ANSI Class 300
Firesafe Valve Model Numbers:	Series AF818 ANSI Class 150 Series AF828 ANSI Class 300 Series FZ818 (2" only) Series FZ828 (2" only)
Body Materials:	Carbon Steel Stainless Steel
Seats:	TFE, Reinforced TFE, Polyfill®
Body Seal:	TFE (Graphite on AF and FZ Firesafe Valves)
Stem Seals:	Reinforced TFE (Graphite on AF and FZ Firesafe Valves)
Actuator Mounting:	ISO 5211
Standards:	B16.34 ANSI B16.10 face to face dimensions ANSI B16.5 150 lb. & 300 lb. flange dimensions API 6D Pipeline Valves. Specify V39 option API 607 Ed. 4, BS6755 MSS SP6 flange finish (125-250 Ra) NACE MR0175-95 BS5500 and ASME VIII bolt & pressure vessel codes Certifications to above standards are available on request. Specify when ordering.
Valve Torque:	Refer to full port valve torque values in Actuator Sizing Manual (ASM).

Dimensions

Inches (mm)

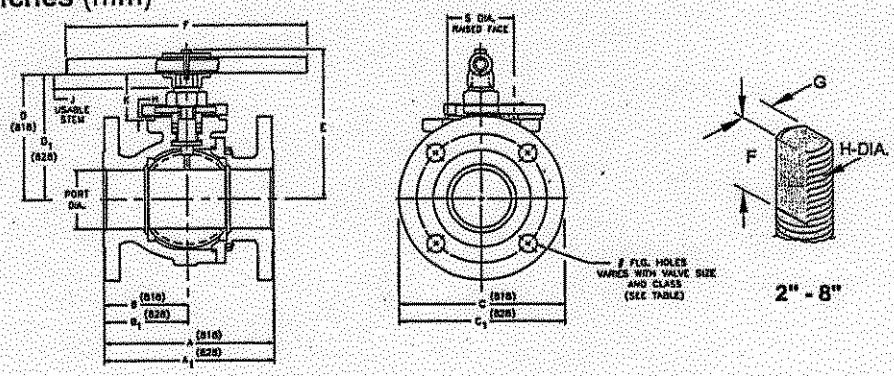

Valve Size	Weight lb. (Kg) 816	Weight lb. (Kg) 826
2"	55 (25.0)	65 (29.5)
3"	75 (34.0)	100 (45.4)
4"	110 (50.0)	150 (68.0)
6"	210 (95.3)	275 (125)
8"	375 (170)	525 (238)

Valve Size	816-ANSI Class 150 Ball Valves A	B	C	D	E	F Usable Stem	G	H	K	ISO MTG	826-ANSI Class 300 Ball Valves A	B	C	D	E	F Usable Stem	G	H	K	ISO MTG
2"	7.00 (178)	2.90 (73.7)	6.16 (157)	5.12 (130)	1.68 (42.7)	.70 (17.8)	.549 (13.9)	.787 (20.0)	10.00 (254)	F07	8.50 (216)	2.90 (73.7)	6.16 (157)	5.11 (130)	1.68 (42.7)	.70 (17.8)	.549 (13.9)	.787 (20.0)	10.00 (254)	F07
3"	8.00 (203)	3.68 (93.5)	7.89 (200)	6.37 (162)	1.96 (49.8)	.68 (17.3)	.592 (15.0)	.831 (21.1)	15.8 (401)	F07	11.1 (282)	3.68 (93.5)	8.41 (214)	6.85 (174)	2.15 (54.6)	.84 (21.3)	.758 (19.3)	1.07 (27.2)	24.0 (610)	F10
4"	9.00 (229)	4.61 (117)	9.23 (234)	7.67 (195)	2.15 (54.6)	.84 (21.3)	.758 (19.3)	1.07 (27.2)	24.0 (610)	F10	12.0 (305)	5.20 (132)	10.8 (274)	8.60 (218)	2.82 (71.6)	1.13 (28.7)	1.04 (26.4)	1.30 (33.0)	39.5 (1003)	F12
6"	15.5 (394)	7.03 (179)	12.2 (310)	9.98 (254)	2.82 (71.6)	1.13 (28.7)	1.04 (26.4)	1.30 (33.0)	39.5 (1003)	F12	15.9 (404)	7.03 (179)	12.8 (325)	10.6 (269)	2.99 (75.9)	1.17 (29.7)	1.19 (30.2)	1.49 (37.9)	39.5 (1003)	F14
8"	18.0 (457)	8.10 (206)	—	12.3 (313)	2.99 (76.0)	1.17 (29.7)	1.19 (30.2)	1.49 (37.9)	—	F14	16.5 (419)	8.10 (206)	—	13.5 (343)	3.42 (86.9)	1.42 (36.1)	1.35 (34.3)	1.67 (42.4)	—	F16

Worcester flanged valves are designed to conform to ASME B16.5-1996 standards. Selected dimensions from that publication are shown in Worcester's Brochure No. PB51 (Series 51/52 Valves) and Engineering Data Sheet ED-2.

Pressure/Temperature Rating

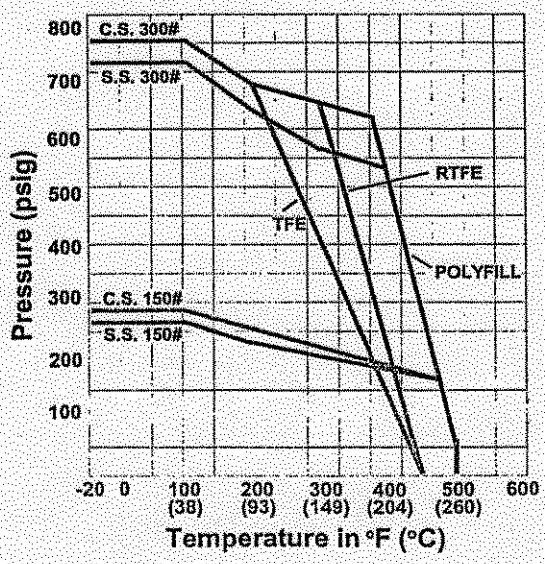

Flow Coefficient - C_V

Valve Size	Port Size Inches (mm)	C_V
2"	2.00 (50.8)	501
3"	3.00 (76.2)	1,158
4"	4.00 (102)	2,118
6"	6.00 (152)	5,047
8"	8.00 (204)	9,337

Parts/Materials

No.	Part Name	Material	No.	Part Name	Material
1	Body	Carbon Steel ASTM-A216 WCB Stainless Steel ASTM-A351 CF8M	13	Body Studs	Carbon Steel ASTM-A193 GR. B7, Black Oxide Coated Stainless Steel ASTM-A193 GR. B8
2	End Connector	Carbon Steel ASTM-A216 WCB Stainless Steel ASTM-A351 CF8M	14	Body Nuts	Carbon Steel ASTM-A194-GR. 2H, Zinc Plated Stainless Steel ASTM-A194 GR. 8
3	Ball	Stainless Steel ASTM-A351 CF8M or ASTM A479-316, Cond. A	15	Centering Washer	Stainless Steel AISI 316
4	Stem	Stainless Steel ASTM-A479-316 Condition A	16	Wrench Extension	Carbon Steel ASTM-A53, Galvanized Stainless Steel ASTM-A312, 300 Series
5	Seat	TFE, Reinforced TFE, Polyfill	17	Wrench Block	Stainless Steel ASTM-A743-CF8
6	Body Seal	TFE, Z (Graphite) seal used on AF & FZ valves	18	Hex Head Bolt	Stainless Steel AISI 300 Series
7	Stem Seals	Reinforced TFE, Graphite on AF & FZ valves	19	Fixed Lockplate	Stainless Steel AISI 300 Series
8	Thrust Bearing	Reinforced TFE, Graphite on AF & FZ valves	20	Moving Lockplate	Stainless Steel ASTM-A743-CF8 (304)
9	Follower	Stainless Steel ASTM-A276-316 Condition A or A269-300	21	Lock Spacer	Stainless Steel AISI 300 Series
10	Retaining Nut	Carbon Steel, Zinc Plated Stainless Steel AISI 303, Zinc Plated	22	Washer	Stainless Steel AISI 300 Series
11	Stop	Stainless Steel, 300 Series	23	Button Head Screw	Stainless Steel AISI 300 Series
12	Stop Screw	Stainless Steel ASTM-A276, 300 Series			

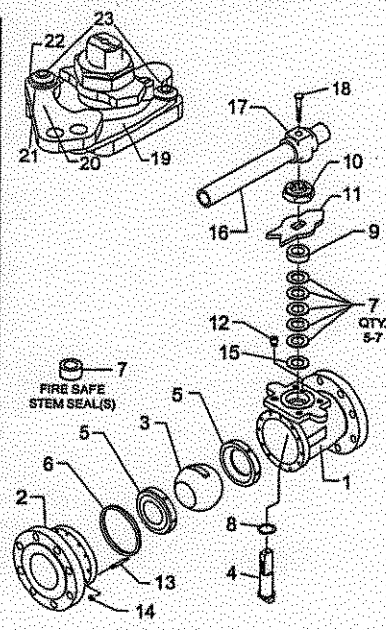

How To Order

3" — 818 — 4 — 66 — R — T — 150

Valve Size	Options	Design	Style	Body	Ball & Stem	Seats	Body Seals**	End Connection
2" 3" 4" 6" 8"	( ) - Blank, No Options J - No handle, valve built for automation V - Clean for vacuum service X - Clean for oxygen service	( ) - Blank, Standard AF - Fire-safe *FZ - Fire-safe	818 - Class 150 828 - Class 300	4 - Carbon Steel 6 - 316 Stainless Steel	66 - 316 Stainless Steel	T - TFE R - Reinforced TFE P - Polyfill	T - TFE †Z - Graphite	150 - ANSI 150# Flanges 300 - ANSI 300# Flanges

* 2" valves only.
** Use only one letter if body seal is same material as seat.
† AF and FZ Fire safe valves only available with Z body seals.

NOTE: Standard Worcester Valves are assembled with silicon based break in lubricant. For other options, consult your distributor or Worcester Controls.

Ordering Example: A 3" Series 818 full port flanged valve with carbon steel body, 316 stainless steel ball and stem, reinforced TFE seats, TFE body seal, ANSI Class 150 flanges and manual lever or handle.

Caution: Ball valves can retain pressurized media in the body cavity when closed. Use care when disassembling. Always open valve to relieve pressure prior to disassembly.

Due to continuous development of our product range, we reserve the right to alter the product specifications contained in this brochure, as required.

® and Worcester are registered trademarks of Worcester Controls Corporation.
Polyfill® is a registered trademark of Worcester Controls Corporation.

Distributed By:

Worcester Controls / McCANNA

33 LOCKE DRIVE
P.O. BOX 538
MARLBOROUGH, MA 01752
(508) 481-4500
(508) 481-4454 FAX
http://www.worcesterco.com
http://www.mccannainc.com

20 MID-DOMINION ACRES
SCARBOROUGH, ONTARIO
M1S 4A5 CANADA
(416) 298-1671
(416) 298-8330 FAX

RUA TOCANTINS, 128 - VILA GERTY
SÃO CAETANO DO SUL
SÃO PAULO - CEP: 09580-130
BRAZIL
(55-11) 4239.3500
(55-11) 4239.4757 FAX

©1999 by Worcester Controls/McCANNA
Printed in USA 4/99 7M WV

ATTACHMENT F

ECN-720173 R.0
ECN-720174 R.0
Proposed ENRAF Sketches

ENGINEERING CHANGE NOTICE CONTINUATION SHEET Page 5 of	☐ DM ☒ FM ☐ TM	1a. ECN-720173 R 0 1b. Proj. ECN W- -

FOR REFERENCE ONLY

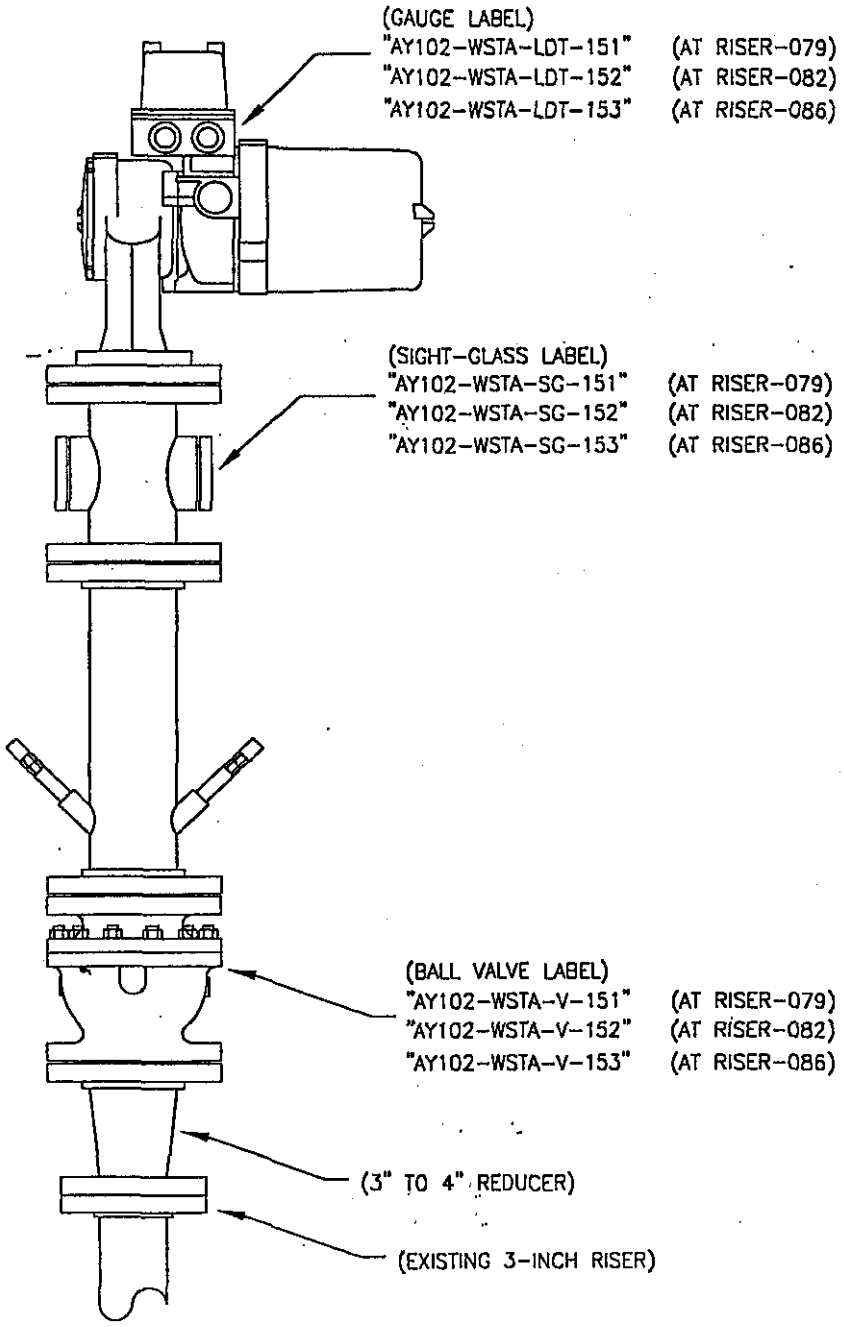

ECN-720173R0---4 TO 3 REDUCER.DWG

ENGINEERING CHANGE NOTICE CONTINUATION SHEET Page 5 of	☐ DM ☒ FM ☐ TM	1a. ECN-720174 R 0 1b. Proj. ECN W- -

FOR REFERENCE ONLY

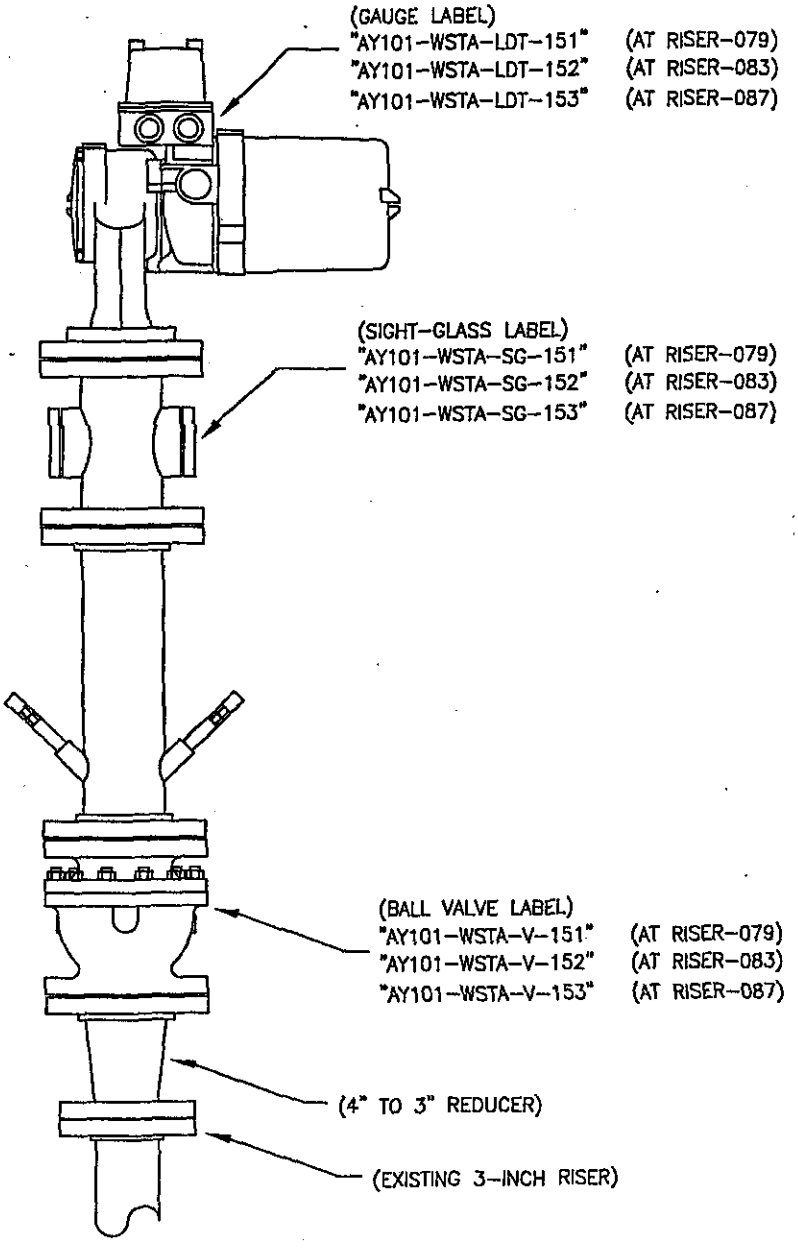

ECN-720174R0---4 TO 3 REDUCER.DWG

ATTACHMENT G

Standards

- ASME B16.1-1998
- ASTM A106 Grade B
- ASTM A126 Grade A

Rating Class	Size	Numeral
25	All	25
125	1 to 12	125
	14 to 24	100
	30 to 48	50
250	1 to 12	250
	14 to 24	200
	30 to 48	100

4.2 Flanges

The manufacturer's name or trademark shall be cast on all loose flanges. In addition, numerals 25 shall be cast on Class 25 flanges. Rating numerals for other classes shall be cast on loose flanges that are subject to the requirements of para. 4.3.

4.3 Material Class

In those sizes and classes where both Classes A and B iron can be used, the letter A or B shall be cast on both flanges and fittings adjacent to the rating numerals. Flanges and fittings with no A or B Class iron marking shall be considered as Class A iron for rating purposes.

5 MATERIALS

5.1 Castings

The castings shall meet the requirements of ASTM A 126 as listed in para. 5.1.1.

5.1.1 The material requirements for flanges and flanged fittings shall be as follows:

Rating Class	Size	Class of Iron ASTM A 126
25	All	A
125	1 to 12	A or B
	14 and above	B
250	1 to 12	A or B
	14 and above	B

5.2 Bolting

The bolting used with these flanges and fittings shall be made of carbon steel that conforms to the requirements of ASTM A 307 Grade B[1] and used with ring-type gaskets.

6 FITTING DIMENSIONS AND TOLERANCES

6.1 Wall Thickness

It is recognized that some variations are absolutely unavoidable in the making of patterns and castings. Equipment shall be designed to produce wall thicknesses given in the tables. Wall thickness at no point shall be less than 87.5% of the thickness given in the tables.

6.2 Facing

6.2.1 Classes 25 and 125 cast iron flanges and flanged fittings shall be flat faced (i.e., without projection or raised face) and finished in accordance with MSS SP-6.

6.2.2 Class 250 flanges and flanged fittings shall have a raised face 0.06 in. high of the diameters given in Table 6 and finished in accordance with MSS SP-6. The raised face is included in the minimum flange thickness and center-to-face dimension.

6.3 Center-to-Face Dimensions

6.3.1 Side Outlet Fittings. Side outlet elbows, side outlet tees, and side outlet crosses shall have all openings on intersecting centerlines. Long-radius elbows with side outlet shall have the side outlet on the radial centerline of the elbow.

6.3.2 Elbows

(a) The center-to-face dimensions for straight-size 90 deg. elbows, 90 deg. long-radius elbows, 45 deg. elbows, side-outlet 90 deg. elbows, and double-branch elbows are shown in Tables 3, 5, and 7.

(b) Reducing 90 deg. elbows, reducing 90 deg. long-radius elbows, reducing side-outlet 90 deg. elbows, and reducing double-branch elbows shall have the same center-to-face dimensions as straight-size fittings shown in Tables 3, 5, and 7 corresponding to the size of the largest opening.

[1] For Classes 25 and 125 flanges: The carbon steel bolts prescribed for the flanges in this Standard are based on the use of a flat "ring" gasket that extends to the bolts.

Where cast iron to cast iron flanges or cast iron to steel flanges are used with full-face gaskets, higher strength bolts may properly be used.

Where cast iron flanges are bolted to steel flanges and flat ring gaskets are used, carbon steel bolts prescribed in this Standard shall be employed.

A 106

TABLE 2 Tensile Requirements

	Grade A (Explanatory Note 2)		Grade B		Grade C	
Tensile strength, min, psi (MPa)	48 000 (330)		60 000 (415)		70 000 (485)	
Yield strength, min, psi (MPa)	30 000 (205)		35 000 (240)		40 000 (275)	
	Longitudinal	Transverse	Longitudinal	Transverse	Longitudinal	Transverse
Elongation in 2 in. or 50 mm, min, %:						
Basic minimum elongation transverse strip tests, and for all small sizes tested in full section	35	25	30	16.5	30	16.5
When standard round 2-in. or 50-mm gage length test specimen is used	28	20	22	12	20	12
For longitudinal strip tests	A,B		A,B		A,B	
For transverse strip tests, a deduction for each 1/32-in. (0.8-mm) decrease in wall thickness below 5/16 in. (7.9 mm) from the basic minimum elongation of the following percentage shall be made		1.25[C]		1.00[C]		1.00[C]

[A]The minimum elogation in 2 in. (50.8 mm) shall be determined by the following equation:

$$e = 625\,000A^{0.2} / U^{0.9}$$

where:

e = minimum elongation in 2 in. (50.8 mm), %, rounded to the nearest 0.5%.
A = cross-sectional area of the tension test specimen, in.^{2}, based on specified outside diameter or nominal specimen width and specified wall thickness rounded to the nearest 0.01 in.^{2}(if the area thus calculated is greater than the value 0.75 in.^{2} shall be used), and
U = specified tensile strength, psi.

[B]See Table 4 for minimum elongation values for various size tension specimens and grades.
[C]Table 3 gives the computed minimum values:

TABLE 3 Computed Transverse Elongation[A]

Wall Thickness		Elongation in 2 in. or 50 mm, min, %	
in.	mm	Grade A, Transverse	Grades B and C, Transverse
5/16 (0.312)	7.9	25.00	16.50
9/32 (0.281)	7.1	23.75	15.50
1/4 (0.250)	6.4	22.50	14.50

[A]This table gives the computed minimum elongation values for each 1/32-in. (0.8-mm) decrease in wall thickness. Where the wall thickness lies between two values shown above, the minimum elongation value is determined by the following equation:

Grade	Direction of Test	Equation
A	Transverse	$E = 40t + 12.50$
B and C	Transverse	$E = 32t + 6.50$

where:

E = elongation in 2 in. or 50 mm, %, and
t = actual thickness of specimen, in.

TABLE 4 Elongation Values

	Tension Test Specimen Wall Thickness, in.[B]				Elongation in 2 in. min., Specified Tensile Strength, psi		
					Grade A	*Grade B*	*Grade C*
Area, in.^{2}[A]	1/2 in. Specimen	3/4 in. Specimen	1 in. Specimen	1 1/2 in. Specimen	48 000	60 000	70 000
≥ 0.75	≥ 1.491	≥ 0.994	≥ 0.746	≥ 0.497	36.0	29.5	25.5
0.74	1.470–1.490	0.980–0.993	0.735–0.745	0.490–0.496	36.0	29.5	25.5
0.73	1.451–1.469	0.967–0.979	0.726–0.734	0.484–0.489	36.0	29.5	25.5
0.72	1.430–1.450	0.954–0.966	0.715–0.725	0.477–0.483	36.0	29.5	25.5
0.71	1.411–1.429	0.941–0.953	0.706–0.714	0.471–0.476	35.5	29.0	25.5
0.70	1.390–1.410	0.927–0.940	0.695–0.705	0.464–0.470	35.5	29.0	25.5
0.69	1.371–1.389	0.914–0.926	0.686–0.694	0.457–0.463	35.5	29.0	25.5
0.68	1.350–1.370	0.900–0.913	0.675–0.685	0.450–0.456	35.5	29.0	25.0
0.67	1.331–1.349	0.887–0.899	0.666–0.674	0.444–0.449	35.5	29.0	25.0
0.66	1.310–1.330	0.874–0.886	0.655–0.665	0.437–0.443	35.0	29.0	25.0
0.65	1.291–1.309	0.861–0.873	0.646–0.654	0.431–0.436	35.0	28.5	25.0
0.64	1.270–1.290	0.847–0.860	0.635–0.645	0.424–0.430	35.0	28.5	25.0
0.63	1.251–1.269	0.834–0.846	0.626–0.634	0.417–0.423	35.0	28.5	25.0
0.62	1.230–1.250	0.820–0.833	0.615–0.625	0.410–0.416	35.0	28.5	25.0

Designation: A 126 – 95[ε1]

Standard Specification for Gray Iron Castings for Valves, Flanges, and Pipe Fittings[1]

This standard is issued under the fixed designation A 126; the number immediately following the designation indicates the year of original adoption or, in the case of revision, the year of last revision. A number in parentheses indicates the year of last reapproval. A superscript epsilon (ε) indicates an editorial change since the last revision or reapproval.

This standard has been approved for use by agencies of the Department of Defense.

ε[1] NOTE—Note 1 was added editorially in September 1998.

1. Scope

1.1 This specification covers three classes of gray iron for castings intended for use as valve pressure retaining parts, pipe fittings, and flanges.

1.2 The values stated in inch-pound units are to be regarded as the standard. The values given in parentheses are for information only.

NOTE 1—The text of this standard references notes and footnotes which provide explanatory material. These notes and footnotes (excluding those in tables and figures) shall not be considered as requirements of the standard.

2. Referenced Documents

2.1 *ASTM Standards:*

A 48 Specification for Gray Iron Castings[2]

A 438 Test Method for Transverse Testing of Gray Cast Iron[2]

A 644 Terminology Relating to Iron Castings[2]

E 8 Test Methods for Tension Testing of Metallic Materials[3]

3. Terminology

3.1 Definitions of many terms common to gray iron castings are found in Terminology A 644.

4. Classification

4.1 Castings produced to this specification are classified based upon the minimum tensile strength of the iron (see Table 1).

5. Ordering Information

5.1 Orders for material in this specification should include the following information:

5.1.1 ASTM designation and year date,

5.1.2 Class of iron required,

5.1.3 Quantity,

5.1.4 Transverse test, if required (see Section 8), and

5.1.5 Certification, if required (see Section 17).

TABLE 1 Tensile Requirements

	Class A	Class B	Class C
Tensile strength, min, ksi (MPa)	21 (145)	31 (214)	41 (283)

6. Workmanship, Finish, and Appearance

6.1 The castings shall be made in a workmanlike manner and the surface shall be free of adhering sand, scale, cracks, and hot tears as determined by visual examination.

7. Chemical Requirements

7.1 A chemical analysis shall be performed on each lot and shall conform to the following requirements for phosphorus and sulfur:

Phosphorus, max, %	0.75
Sulfur, max, %	0.15

7.2 The chemical analysis shall be performed on a sample obtained during the pouring of the lot.

8. Tensile Properties

8.1 One tension test shall be performed on each lot and shall conform to the mechanical properties specified in Table 1.

9. Transverse Test

9.1 When specified by the purchaser, one transverse test shall be performed on each lot and shall conform to the requirement specified in Table 2.

9.2 The test shall be performed with the bar resting on supports separated by 12 in. (305 mm) and the load applied midway between the supports. The load shall be applied at a rate that will produce 0.10 in. (2.5 mm) central deflection in 20 to 40 s.

9.3 In case the transverse test specimen varies from the specified diameter of 1.20 in. (30.5 mm), a correction factor conforming to the requirements for Test Bar B in Table 1 of Test Method A 438 shall apply.

[1] This specification is under the jurisdiction of ASTM Committee A-4 on Iron Castings and is the direct responsibility of Subcommittee A04.01 on Gray Iron Castings.

Current edition approved Dec. 10, 1995. Published January 1996. Originally published as A 126 – 29T. Last previous edition A 126 – 93.

[2] *Annual Book of ASTM Standards*, Vol 01.02.

[3] *Annual Book of ASTM Standards*, Vol 03.01.

Copyright © ASTM, 100 Barr Harbor Drive, West Conshohocken, PA 19428-2959, United States.

ATTACHMENT H

Email from Chuck Scaief

Safety and Performance Category

Calibo Katasak

From: Scaief, C C III (Chuck) [C_C_III_Chuck_Scaief@RL.gov]
Sent: Monday, March 31, 2003 7:52 AM
To: Calibo Katasak; Scaief, C C III (Chuck)
Cc: Freeman, Roger D (Rick); Born, David J; Ulk, Paul F
Subject: RE: Safety Class and Performance Category on 241-AY-101/102 ENRAF Ins tallation

I am not sure what SC=SS means, but the gauges are being designed safety class and PC-2 for seismic.

Chuck

-----Original Message-----
From: Calibo Katasak [mailto:KCalibo@LATA.com]
Sent: Thursday, March 27, 2003 8:16 AM
To: 'C_C_III_Chuck_Scaief@rl.gov'
Cc: 'Roger_D_Rick_Freeman@rl.gov'; 'David_J_Born@rl.gov'; 'Paul_F_Ulk@rl.gov'
Subject: Safety Class and Performance Category on 241-AY-101/102 ENRAF Ins tallation

Chuck,

I was informed by Rick Freeman (per his conversation with you) that I should
use "Safety Class = Safety Significant" and "Performance Category = PC-2"
for my structural analysis of 241-AY-101/102 ENRAF-Nonius Assembly (ECN-720173 R.0) Installation on 3" risers.

Please confirm by return correspondence.

Thank You.

Katasak Calibo
Civil/Structural, E.I.T.
LATA, Inc.
(509) 946-2983
Fax (509) 946-8700