Sta. 4 ⑥

M026 - 200

MAY 3 0 2003

ENGINEERING DATA TRANSMITTAL

1. EDT 637182

S

2. To: (Receiving Organization) Distribution	3. From: (Originating Organization) Design Engineering	4. Related EDT No.: N/A
5. Proj./Prog./Dept./Div.: /7G120	6. Design Authority/Design Agent/Cog. Engr.: R. Schlosser/T. Blaak TMB 5/30/03	7. Purchase Order No.: N/A
8. Originator Remarks: For Review and Approval		9. Equip./Component No.: N/A
		10. System/Bldg./Facility: 200E DST Trans system
		12. Major Assm. Dwg. No.: N/A
11. Receiver Remarks: For Approval. Note - This document is not effective until the DSA is implemented. This SDD replaces RPP-10683 on implementation.	11A. Design Baseline Document? ☒ Yes ☐ No	13. Permit/Permit Application No.: N/A
		14. Required Response Date: May 30, 2003

15. DATA TRANSMITTED

(A) Item No.	(B) Document/Drawing No.	(C) Sheet No.	(D) Rev. No.	(E) Title or Description of Data Transmitted	(F) Approval Designator	(G) Reason for Transmittal	(H) Originator Disposition	(I) Receiver Disposition
1	RPP-15137	N/A	0	System Design Description	N/A	1	1	
				for the 200E Area DST				
				Waste Transfer System				
				(DSA-Based)				

16. KEY

Approval Designator (F)	Reason for Transmittal (G)		Disposition (H) & (I)	
E, S, Q, D OR N/A (See WHC-CM-3-5, Sec. 12.7)	1. Approval 2. Release 3. Information	4. Review 5. Post-Review 6. Dist. (Receipt Acknow. Required)	1. Approved 2. Approved w/comment 3. Disapproved w/comment	4. Reviewed no/comment 5. Reviewed w/comment 6. Receipt acknowledged

17. SIGNATURE/DISTRIBUTION (See Approval Designator for required signatures)

(G) Reason	(H) Disp.	(J) Name	(K) Signature	(L) Date	(M) MSIN	(G) Reason	(H) Disp.	(J) Name	(K) Signature	(L) Date	(M) MSIN
1	1	Design Authority R. Schlosser		5/30/03	R3-83	1	1	W. Powell		5/30/03	S6-18
8		Design Agent N/A									
1	1	Cog. Eng. T Blaak		5/30/03	S5-13						
1	1	Cog. Mgr. C. DeFigh-Price		5-30-03	R2-58						
		QA									
4	4	Safety A Stithem			R1-44						
4	4	Env. P C Miller			R1-51						

18.	19.	20.	21. DOE APPROVAL (if required)
R. Schlosser Signature of EDT Originator Date 5/30/03	C. DeFigh-Price Authorized Representative for Receiving Organization Date 5/30/03	R. Schlosser Design Authority/ Cognizant Manager Date 5/30/03	Ctrl No. N/A ☐ Approved ☐ Approved w/comments ☐ Disapproved w/comments

DISTRIBUTION SHEET

To	From	Page 1 of 1
Distribution	Design Engineering	Date May 30, 2003
Project Title/Work Order		EDT No. 637182
System Design Description for the 200E Area DST Waste Transfer System (DSA-Based)		ECN No. N/A

Name	MSIN	Text With All Attach.	Text Only	Attach./ Appendix Only	EDT/ECN Only
C Defigh-Price	R2-58	x			
T C Oten	R1-14	x			
P C Miller	R1-51	x			
A Stithem	R1-44	x			
M A Fish	R1-14	x			
D C Lowe	R2-58	x			
R Schlossler	R3-83	x			
W. Powell	S6-18	x			
T. Blaak	S5-13	x			
DOE Reading Room	H2-53	X h			
Hanf. Tech. Library	P8-55	X h			

A-6000-135 (10/97)

SYSTEM DESIGN DESCRIPTION FOR THE 200 EAST AREA DST WASTE TRANSFER SYSTEM (DSA-BASED)

R. Reed
CH2M HILL Hanford Group, Inc.
Richland, WA 99352
U.S. Department of Energy Contract DE-AC27-99RL14047

EDT/ECN: 637182 UC:
Cost Center: 7G120 Charge Code: 501628
B&R Code: Total Pages: ~~158~~ 150

Key Words: 200 East Area DST transfer, transfer, tank farm, 200 East transfer, 200 East DST, transfer system, 200E transfer

Abstract: SDD secribes the 200 East Area DST transfer system.

TRADEMARK DISCLAIMER. Reference herein to any specific commercial product, process, or service by trade name, trademark, manufacturer, or otherwise, does not necessarily constitute or imply its endorsement, recommendation, or favoring by the United States Government or any agency thereof or its contractors or subcontractors.

Printed in the United States of America. To obtain copies of this document, contact: Document Control Services, P.O. Box 950, Mailstop H6-08, Richland WA 99352, Phone (509) 372-2420; Fax (509) 376-4989.

DATE: HANFORD RELEASE
STA: 4 ID: 2.
MAY 30 2003

Release Approval Date 5/30/03

Release Stamp

Approved For Public Release

RPP-15137
Revision 0

System Design Description for 200 East Area Double-Shell Tank Waste Transfer Systems (DSA-Based)

This document is not effective until the DSA is implemented. This SDD replaces RPP-10683 on implementation.

Prepared for the U.S. Department of Energy
Assistant Secretary for Environmental Management

CH2MHILL
Hanford Group, Inc.

Richland, Washington

Contractor for the U.S. Department of Energy
Office of River Protection under Contract DE-AC27-99RL14047

Approved for public release; further dissemination unlimited

TRADEMARK DISCLAIMER

Reference herein to any specific commercial product, process, or service by trade name, trademark, manufacturer, or otherwise, does not necessarily constitute or imply its endorsement, recommendation, or favoring by the United States Government or any agency thereof or its contractors or subcontractors.

This report has been reproduced from the best available copy.

Printed in the United States of America

RPP-15137
Revision 0

System Design Description for 200 East Area Double-Shell Tank Waste Transfer Systems (DSA-Based)

This document is not effective until the DSA is implemented. This SDD replaces RPP-10683 on implementation.

Date Published
May 2003

Prepared for the U.S. Department of Energy
Assistant Secretary for Environmental Management

CH2MHILL
Hanford Group, Inc.

P. O. Box 1500
Richland, Washington

Contractor for the U.S. Department of Energy
Office of River Protection under Contract DE-AC27-99RL14047

Approved for public release; further dissemination unlimited

SYSTEM DESIGN DESCRIPTION FOR THE 200 EAST AREA DOUBLE-SHELL TANK WASTE TRANSFER SYSTEM

This page intentionally left blank.

RECORD OF REVISION

Replace this page with the Record of Revision (ROR), Site Form A-7320-005.

This page intentionally left blank.

ABSTRACT

This system design description of the 200 East Area Double-Shell Tank Waste Transfer System is intended to be a living compendium of design requirements, design bases, and system descriptions. The system design description includes references to relevant procedures, drawings, calculations, and supporting documents. It is written to the outline provided in DOE-STD-3024-98, *Content of System Design Descriptions*.[1] All section headings from DOE-STD-3024-98 are included.

[1] DOE-STD-3024-98, *Content of System Design Descriptions*, U.S. Department of Energy, Washington, D.C.

This page intentionally left blank.

CONTENTS

1.0 INTRODUCTION 1-1
- 1.1 SYSTEM IDENTIFICATION 1-1
- 1.2 LIMITATIONS OF THIS SYSTEM DESIGN DESCRIPTION 1-2
- 1.3 OWNERSHIP OF THIS SYSTEM DESIGN DESCRIPTION 1-2
- 1.4 DEFINITIONS/GLOSSARY 1-2
- 1.5 ACRONYMS 1-4

2.0 GENERAL OVERVIEW 2-1
- 2.1 SYSTEM FUNCTIONS 2-1
- 2.2 SYSTEM CLASSIFICATION 2-3
  - 2.2.1 Safety Classification 2-3
  - 2.2.2 Mission Critical Classification 2-3
  - 2.2.3 Environmental Classification 2-3
- 2.3 BASIC OPERATIONAL OVERVIEW 2-4
  - 2.3.1 Process Function 2-4
  - 2.3.2 Process Functions at System Interface 2-13
  - 2.3.3 Environmental Protection Function 2-14

3.0 REQUIREMENTS AND BASES 3-1
- 3.1 GENERAL REQUIREMENTS (PROCESS PIPING) 3-1
  - 3.1.1 System Functional Requirements 3-1
  - 3.1.2 Subsystems and Major Components 3-5
  - 3.1.3 Boundaries and Interfaces 3-7
  - 3.1.4 Codes, Standards, and Regulations 3-10
  - 3.1.5 Operability 3-11
- 3.2 SPECIAL REQUIREMENTS (PIPING) 3-14
  - 3.2.1 Radiation and Other Hazards 3-14
  - 3.2.2 As Low As Reasonably Achievable Standards 3-15
  - 3.2.3 Nuclear Criticality Safety 3-15
  - 3.2.4 Industrial Hazards 3-15
  - 3.2.5 Operating Environment and Natural Phenomena 3-16
  - 3.2.6 Human Interface Requirements 3-17
  - 3.2.7 Specific Commitments 3-17
- 3.3 ENGINEERING DISCIPLINARY REQUIREMENTS 3-17
  - 3.3.1 Civil and Structural 3-17
  - 3.3.2 Mechanical and Materials 3-17
  - 3.3.3 Chemical and Process 3-18
  - 3.3.4 Electrical Power 3-18
  - 3.3.5 Instrumentation and Control 3-18
  - 3.3.6 Computer Hardware and Software 3-18
- 3.4 TESTING AND MAINTENANCE REQUIREMENTS (PIPING) 3-19
  - 3.4.1 Testability 3-19
  - 3.4.2 Technical Safety Requirement-Required Surveillances 3-19
  - 3.4.3 Non-Technical Safety Requirement Inspections and Testing 3-20

3.4.4 Maintenance 3-20
3.5 OTHER REQUIREMENTS 3-21
3.5.1 Security and Special Nuclear Material Protection 3-21
3.5.2 Special Installation Requirements 3-21
3.5.3 Reliability, Availability, and Preferred Failure Modes 3-21
3.5.4 Quality Assurance 3-22
3.5.5 Miscellaneous 3-22
3.6 MISCELLANEOUS TRANSFER STRUCTURES 3-22
3.6.1 General Requirements 3-22
3.6.2 Specific Requirements 3-24
3.6.3 Engineering Disciplinary Requirements 3-26
3.6.4 Testing And Maintenance Requirements 3-27
3.6.5 Other Requirements 3-27
3.7 INSTRUMENTATION AND CONTROLS/ MASTER PUMP SHUTDOWN SYSTEM 3-28
3.7.1 General Requirements 3-28
3.7.2 Special Requirements 3-32
3.7.3 Engineering Disciplinary Requirements 3-33
3.7.4 Testing And Maintenance Requirements 3-34
3.7.5 Other Requirements 3-36

4.0 SYSTEM DESCRIPTION 4-1
4.1 CONFIGURATION 4-1
4.1.1 Description of System, Subsystems, and Major Components 4-1
4.1.2 Boundaries and Interfaces 4-1
4.1.3 Physical Location and Layout 4-5
4.1.4 Principles of Operation 4-19
4.1.5 System Reliability Features 4-26
4.1.6 System Control Features 4-26
4.2 OPERATIONS 4-27
4.2.1 Initial Configuration (Pre-Startup) 4-27
4.2.2 System Startup 4-27
4.2.3 Normal Operations 4-27
4.2.4 Off-Normal Operations 4-28
4.2.5 System Shutdown 4-28
4.2.6 Safety Management Programs and Administrative Controls 4-28
4.3 TESTING AND MAINTENANCE 4-29
4.3.1 Temporary Configurations 4-29
4.3.2 Technical Safety Requirement-Required Surveillances 4-29
4.3.3 Non-Technical Safety Requirement Inspections and Testing 4-29
4.3.4 Maintenance 4-29

5.0 REFERENCES 5-1

APPENDICES

A DRAWINGS AND DOCUMENTS NECESSARY TO MAINTAIN CONFIGURATION CONTROL OF DESIGN BASELINE ..... A-i

B SYSTEM PROCEDURES ..... B-i

C VENDOR INFORMATION FILES ..... C-i

D SYSTEM HISTORY ..... D-i

E CROSS-REFERENCE TO TANK FARM FACILITY SYSTEM DESIGN DESCRIPTIONS CONTROLLED BY DESIGN ENGINEERING ..... E-i

FIGURES

Figure 1. Waste Transfer System Active Transfer Routes....2-5

Figure 2. Typical DST Tank Farm System Diagram....4-2

Figure 3. Support of Pipe Encasement....4-6

Figure 4. Rigid Jumper Assembly....4-9

Figure 5. Typical Layout of Cleanout Box....4-12

Figure 6. Typical Pump Pit–Plan View....4-14

Figure 7. Typical Pump Pit–Section View....4-15

Figure 8. Typical Layout of a Catch Tank....4-17

Figure 9. Typical 200 East Area Leak Detectors....4-24

Figure 10. Backflow Preventer....4-25

TABLES

Table 1. Active Transfer Lines and Transfer Structures. (7 sheets)....2-7

Table 2. Design Temperatures and Pressures for Transfer Primary Pipe....3-16

Table 3. Flush Pit Interfaces....4-3

Table 4. Clean-Out Boxes associated with WTS....4-12

Table 5. Valve Pits Associated with the WTS....4-13

Table 6. Pump Pits and Sluice Pits Associated with the WTS....4-13

Table 7. Diversion Boxes Associated with the WTS....4-16

1.0 INTRODUCTION

The 200 East Area Double-Shell Tank (DST) Waste Transfer System (WTS) consists of a network of buried transfer pipelines, operating equipment, and transfer structures (diversion boxes, valve pits, and pump pits) used to transfer high-level, radioactive waste between tank farm facilities. The primary purpose of the 200 East Area DST WTS is to support the overall mission of the River Protection Project (RPP) to store, treat, and immobilize highly radioactive waste from Hanford Site tanks in an environmentally safe, sound, and cost-effective manner.

This system design description (SDD) describes the functions of the 200 East Area DST WTS, identifies the requirements and their bases to support the system functions, and discusses how the 200 East Area DST WTS, as designed, fulfills those requirements.

1.1 SYSTEM IDENTIFICATION

The 200 East Area DST WTS extends through the A Tank Farm complex and to the 244-BX double-contained receiver tank (DCRT), consisting of waste transfer systems and components within the AN, AP, AW, AY, and AZ Tank Farms, along with miscellaneous waste transfer systems and components associated with interfarm transfers. The 200 East Area DST WTS contains the following subsystems and major components:

- Process piping
  - Encased piping
  - Valve manifold/jumper assemblies
  - Transfer pumps.
- Miscellaneous transfer structures
  - Cleanout boxes (COB)
  - Valve pits
  - Pump pits
  - Diversion boxes
  - Diverter stations
  - Catch tanks.
- Instrumentation, controls, and the master pump shutdown system(MPSS)
- Chemical addition systems

Each of these subsystems and major components is necessary to support the 200 East Area DST WTS operation. Systems and components that are not compliant with current regulatory codes and currently are inactive are mentioned only where they interface with the 200 East Area DST WTS. Details of these noncompliant systems and/or components are not covered by this SDD.

1.2 LIMITATIONS OF THIS SYSTEM DESIGN DESCRIPTION

The SDD is a central coordinating link among the engineering design documents, the facility safety basis, and the implementing procedures. The SDD is a compilation of information intended primarily for use by facility operation, maintenance, and technical support personnel. The SDD is not a part of the safety basis.

The SDD is formatted to be consistent with DOE-STD-3024-98, *Content of System Design Descriptions*, and is based on the best available information, including interviews with knowledgeable personnel. This SDD was written after the system was designed and installed, and operations had begun. It relies on historic and design basis information.

Chapter 3 of this SDD addresses the system requirements and bases, and provides an assessment of how the design meets the requirements. A formal assessment of how the as-built structures, systems, and components (SSC) in the field meet the requirements is not necessary for the SDD, even though some "walkdowns" were made during its preparation.

This SDD does not include all SSCs for the system, but focuses on those that are active. Designed or planned facility modifications and additions for ongoing projects were not included in the SDD. The intent is to update this SDD with new project information as part of any new project turnover to Operations personnel for beneficial use. A compilation of related tank farm SDDs and their scope descriptions is provided in Appendix E.

1.3 OWNERSHIP OF THIS SYSTEM DESIGN DESCRIPTION

The owner of this document is the design authority for this system who has been formally assigned responsibility by the Engineering Management of the Tank Farm Contractor. The assigned design authority shall approve any changes to this SDD.

1.4 DEFINITIONS/GLOSSARY

Active. An active component is one that is part of the "as-built" tank farms and has not been isolated and disconnected from all other tank farm components as part of an approved engineering change notice.

ALARA. The philosophy of making every reasonable effort to maintain exposures to radiation as low as reasonably achievable (ALARA).

Design Authority. Assigned person responsible to identify and approve design-basis information (TFC-PLN-03, *Engineering Program Management Plan*).

Double-Shell Tank. A tank designed for storage of the highly radioactive and hazardous waste produced at the Hanford Site. The primary tank shell contains the waste and is surrounded by a secondary shell to provide waste containment if the primary shell develops a leak.

Hanford Site. A 1518 km^2 (586-mi^2) nuclear processing site located in south-central Washington State and operated by the U.S. Department of Energy (DOE).

Managed Tank Waste. An historic tank farms systems engineering term used to describe the submission of handling existing tank waste (i.e., waste contained in double-shell tanks, single-shell tanks, and miscellaneous tanks), and new tank waste from Site-level interfaces (e.g., facility operations, decontamination and decommissioning, environmental restoration) that is not the product of retrieval for final processing (see process waste definition). Managed tank waste is limited to the storage of waste before retrieval for processing waste characterization; transfer of supernatant for the resolution of safety issues, optimization of tank space, volume reduction; interim stabilization, and/or emergency pumping; and concentration of tank waste to support tank space use. Management of tank waste continues until all waste is retrieved for final processing and waste no longer is being received from external resources.

Manifold. Remotely installed rigid piping system inside a pit that transfers waste and flush water between nozzles.

Physically Connected Piping. Any piping that is part of the direct transfer path or is connected to the transfer path. Piping is not considered to be connected to the transfer path if it is physically disconnected by an air gap, a blind flange or process blank, an operable Safety-Significant service water pressure detection system, an operable Safety-Significant backflow prevention system, or two closed Safety-Significant isolation valves.

Pit Nozzle. Rigid male connector anchored in the pit wall or the transfer pump housing that provides a leak-tight connection with the connector block attached to a manifold.

Process Waste. Waste from DSTs, SSTs, and miscellaneous underground storage tanks that contain high-level waste.

Programmable Logic Controller. A monitoring and control device capable of providing signal processing, data acquisition, and alarming and interlocking functions.

Safety Basis. The documented safety analysis and hazard controls that provide reasonable assurance that a DOE nuclear facility can be operated safely in a manner that adequately protects workers, the public, and the environment (Title 10 *Code of Federal Regulations* (CFR) Part 830.3, "Nuclear Safety Management," "Definitions").

Safety Classification. Defined in DOE-STD-3009.94, *Preparation Guide for U.S. Department of Energy Nonreactor Nuclear Facility Documented Safety Analyses*, as follows:

> **Safety-Class (SC) SSCs**. Structures, systems, or components including portions of process systems, whose preventive and mitigative function is necessary to limit radioactive hazardous material exposure to the public, as determined from the safety analyses.
>
> **Safety Significant (SS) SSCs**. Structures, systems, and components which are not designated as safety-class SSCs but whose preventive or mitigative junction is a major contributor to defense in depth and/or worker safety as determined from safety analysis.

Tank Farm SSCs that are not designated as SC or SS are referred to as General Service (GS).

RPP-13033, *Tank Farm Documented Safety Analysis*, Chapter 3 "Hazards and Accident Analysis," designates SC and SS SSCs that provide safety controls for postulated accidents. RPP-13033, Chapter 4, "Safety Structures Systems and Components," identifies safety functions, functional requirements and performance criteria for tank farm safety systems.

HNF-SD-WM-TSR-006, *Tank Farms Technical Safety Requirements*, Technical Safety Requirement (TSR) Administrative Control (AC) 5.15, "Tank Farm Instrumentation," lists parameters that must be verified to comply with limiting conditions of operation (LCO). Equipment used to monitor these parameters is not designated as SS or SC and will be referred to as "Other Safety" in this SDD and is classified as General Service.

Slurry Waste. Slurry waste is waste that is not supernatant, other liquid waste, or a solid saltcake/sludge form. Slurry waste is liquid and possesses suspended solids; therefore its specific gravity is greater than 1. Slurry waste is transferable with little or no chemical conditioning; however, most slurry waste requires mixing before it is transferred to ensure that the solids present are suspended throughout.

Supernatant. The component of waste that is liquid and contains no appreciable suspended solids. The specific gravity of supernatant is approximately equal to or slightly greater than 1. Supernatant levels in tanks usually are derived by subtracting the solids-level measurement from the liquid-level measurement. In some cases, this includes any floating solid crusts that are present in the tank.

Transfer-Associated Structure. Pump pits, valve pits, diversion boxes, or COBs.

1.5 ACRONYMS

AC	administrative control
ALARA	as low as reasonably achievable
ANSI	American National Standards Institute
ASME	American Society of Mechanical Engineers
ASTM	American Society for Testing and Materials
CFR	*Code of Federal Regulations*
COB	cleanout box
DCRT	double-contained receiver tank
DOE	U.S. Department of Energy
DST	double-shell tank
LCO	limiting condition for operation
LDSTA	local detection station
MPSS	master pump shutdown system
NFPA	National Fire Protection Association
OSD	operating specification documents
PUREX	Plutonium-Uranium Extraction (Plant)
RCSTS	Replacement Cross-Site Transfer System

RPP	River Protection Project
SC	Safety Class
SDD	system design description
SR	surveillance requirement
SS	Safety Significant
SSC	structure, system, and/or component
SST	single-shell tank
TMAC	tank monitor and control (system)
TSR	technical safety requirement
WAC	*Washington Administrative Code*
WTDS	waste transfer data sheets
WTS	Waste Transfer System

This page intentionally left blank.

2.0 GENERAL OVERVIEW

This chapter provides a general description of the functions that the 200 East Area DST WTS performs and a brief discussion of how the system operates to carry out these functions. A more detailed system description appears in Chapter 4.

2.1 SYSTEM FUNCTIONS

Requirements for the 200 East Area DST WTS are characterized by major system functions. The 200 East Area DST WTS performs the following major functions to accomplish its intended purpose.

- Process function
  - Transfer waste from DST to DST
  - Transfer waste from a catch tank to a DST
  - Transfer waste from a DCRT to a DST
- Process functions at the system interfaces
  - Transfer waste between DST and the 242-A Evaporator
  - Transfer waste from the 204-AR Unloading Facility to any DST
  - Transfer waste from the Replacement Cross-Site Transfer System (RCSTS)
  - Transfer liquid waste from the Single-Shell Tank (SST) Stabilization Project to a DST
  - Receive new liquid waste into DST from facilities
- Safety function (Safety Basis)
  - **Backflow Preventers**. The identified safety function of the backflow preventers is to physically disconnect the waste transfer system from non-waste transfer systems, thus decreasing the potential frequency of a waste transfer leak accident.
  - **Isolation Valves for Double Isolation**. The identified safety function of isolation valves for double isolation is to physically disconnect the waste transfer system, thus decreasing the consequences of a waste transfer leak accident.
  - **Transfer Leak Detection Systems**. The identified safety functions of the waste transfer leak detection system are as follows:
    - To detect the accumulation of waste leaked into a waste transfer-associated structure and to provide an alarm signal to initiate operator

response and pump shutdown, thus decreasing the consequences of the waste transfer leak accident.

* To detect the accumulation of waste leaked into a waste transfer-associated structure and to provide an alarm signal to initiate operator response, thus decreasing the frequency of flammable gas accidents.

- **Service Water Pressure Detection Systems**. The identified safety function of the service water pressure detection systems is to physically disconnect the waste transfer system from non-waste transfer systems, thus decreasing the frequency or consequences of a waste transfer leak accident.

- **Master Pump Shutdown Systems**. The identified safety function of the MPSS is to shut down waste transfer pumps when an alarm signal is received from either a transfer leak detection system or a service water pressure detection systems, thus decreasing the consequences of a waste transfer leak accident.

- Environmental protection function
  - Confine materials and prevent releases to the environment
  - Mitigate the consequences of any accidental releases or leakage
  - Transfer chemicals into DSTs
  - Direct the flow of leaked waste from the primary line to a waste transfer-associated structure for detection
  - Detect waste transfer system leaks in waste transfer-associated structures and provide an alarm to alert operators to take mitigative action to shut down the transfer pump or other motive force
  - Detect backflow into the piping systems physically connected to the waste transfer route, and either interlock or alarm to alert operators to take action to shut down the transfer pump or other motive force
  - Limit the misrouting of waste from the physically connected transfer routes to the physically disconnected portions of the facility
  - Provide confinement of waste in primary piping to minimize the potential for leakage (passive)
  - Prevent leaked waste from jetting directly to the atmosphere (passive)
  - Limit release of aerosols into the atmosphere by means of tortuous air passages (passive).

2.2 SYSTEM CLASSIFICATION

2.2.1 Safety Classification

Safety-Significant subsystems of the 200 East Area DST WTS are as follows:

- Backflow Preventers
- Isolation Valves for Double Valve Isolation
- Transfer Leak Detection Systems
- Service Water Pressure Detection Systems
- Master Pump Shutdown Systems

General-Service SSCs that are part of the 200 East Area DST WTS are as follows:

- Encasement leak detector
- Primary transfer piping
- Transfer structures
- Earth covering buried piping
- Above-grade portions of the transfer structures and their cover block installations
- All other 200 East Area DST WTS SSCs
- Chemical addition system

Specific safety functions and requirements for portions of the 200 East Area DST WTS are provided in the *Tank Farm Safety Equipment List* at URL: http://apwebo5/rapidweb/chg/tfmel/index.

2.2.2 Mission Critical Classification

The 200 East Area DST WTS includes the following mission-critical subsystems as defined in CH2M HILL Hanford Group, Inc., Letter Number CHG-0200593 R1, "Contract Number DE-AC-27-99RL14047; Current Listings of Vital Safety Systems and Mission Critical Systems."

- The cover blocks, including lifting bail controls and inspections
- The electrical distribution system
- The WTS, including transfer piping, transfer piping valves, transfer pumps, and the encasement and transfer structure leak detection systems.

2.2.3 Environmental Classification

The 200 East Area DST WTS is a portion of a *Resource Conservation and Recovery Act of 1976* treatment, storage, and disposal facility and is subject to the *Clean Air Act*, the *Toxic Substances Control Act of 1976*, and the *National Environmental Policy Act of 1969* and *Washington Administrative Code* (WAC) 173-303, "Dangerous Waste Regulations."

2.3 BASIC OPERATIONAL OVERVIEW

Figure 1 shows the active waste transfer routings and transfer structures for the 200 East Area DST WTS. To simplify the diagram, only example tanks and their piping are shown for each farm. For greater detail see Hanford Site Drawing H-14-104175, *Waste Transfer Piping Diagram 200 East Area.* Table 1 lists the current waste transfer routings and transfer structures.

2.3.1 Process Function

Transfer Waste Between Tanks

To transfer waste from tank farm to tank farm, the 200 East Area DST WTS generally uses buried supernatant and slurry transfer lines constructed of carbon or stainless steel primary pipe inside a carbon or stainless steel encasement pipe. Typically, the supernatant transfer lines are 3 in. in diameter with 6-in.-diameter encasements and the slurry transfer lines are 2 in. in diameter with 4-in.--diameter encasements. These interfarm transfer lines interface at the tank farm valve pits or pump pits, and, depending on the route required, pass through valve pits or pump pits of tank farms not designated as the originating or receiving tank farm. Although not currently used in the 200 East Area DST WTS, over-ground transfer hose-in-hose lines can be used to transfer waste. The process for transferring waste within a tank farm is identical to that for transferring waste between tank farms, except that the supernatant and slurry transfer lines all are within the tank farm boundaries.

Before transferring waste, Tank Farm Operations perform several activities. These activities are described in Section 4.1.4. The transfer operations are controlled at the individual tank farm control rooms, and/or the control room alarms are connected to the 242-A Evaporator control room.

Transferring Waste from a Catch Tank to a DST

Catch tanks are underground storage tanks used to collect waste drained from waste transfer systems and DST equipment. Catch tanks can be pumped to a DST via a pump pit through an underground pump-out line. Monitor and control of these transfers are similar to those for transfers from DSTs.

Figure 1. Waste Transfer System Active Transfer Routes.

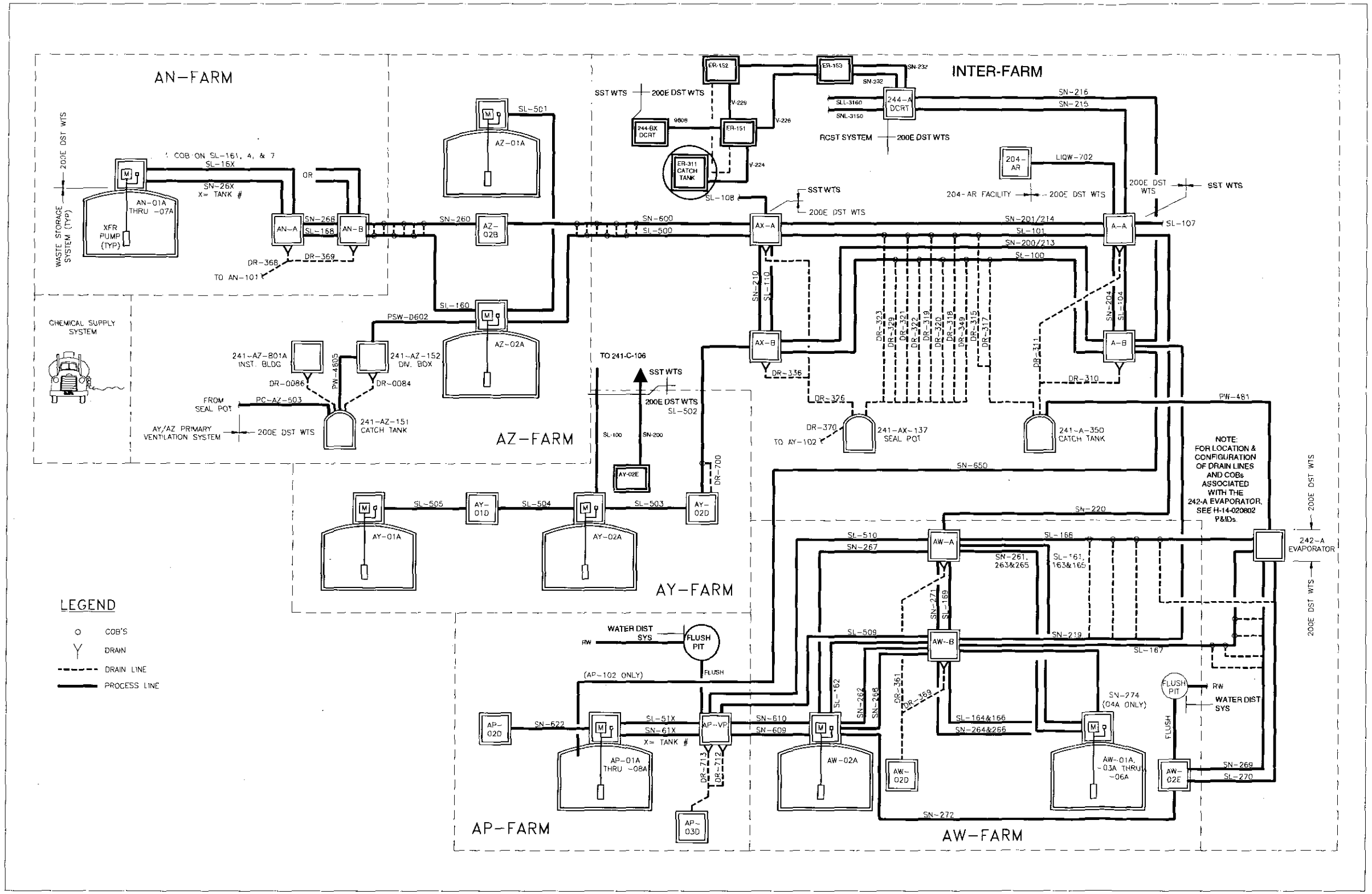

Table 1. Active Transfer Lines and Transfer Structures. (7 sheets)

Tank System and Ancillary Piping Identification	Leak Detection Location*	Waste Route
241-A Valve Pit A		
3" LIQW-702†	241-A-A	From 204-AR Unloading Facility
3" SN-215†	244-A DCRT	From 244-A DCRT
3" SN-220†	241-AW-A	To 241-AW-A
2" SL-104†	241-A-A & 241-A-B	To 241-A-B
2" SL-114†	241-A-A	From 242-A Evaporator
3" SN-204†	241-A-A & 241-A-B	To 241-A-B
241-A Valve Pit B		
2" SL-113†	241-A-B	From 242-A Evaporator
3" SN-216†	244-A DCRT	To 244-A DCRT
3" SN-219†	241-AW-B	To 241-AW-B
3" SN-650†	241-AP-102 (encasement only)	To Tank 241-AP-102
241-A-350 Catch Tank		
3" PW-481/SN-234†	241-A-350	To 242-A Evaporator
241-AN Valve Pit A		
2" SL-165	241-AN-05A	To 241-AN-05A
3" SN-265	241-AN-05A	To 241-AN-05A
2" SL-166	241-AN-06A	To 241-AN-06A
3" SN-266	241-AN-06A	To 241-AN-06A
2" SL-167	241-AN-07A	To 241-AN-07A
3" SN-267	241-AN-07A	To 241-AN-07A
3" SN-268	241-AN-A	To 241-AN-B
2" SL-168	241-AN-A	To 241-AN-B
2" SL-164	241-AN-04A	To 241-AN-04A
3" SN-264	241-AN-04A	To 241-AN-04A
241-AN Valve Pit B		
2" SL-161	241-AN-01A	To 241-AN-01A
3" SN-261	241-AN-01A	To 241-AN-01A
2" SL-162	241-AN-02A	To 241-AN-02A
3" SN-262	241-AN-02A	To 241-AN-02A
2" SL-163	241-AN-03A	To 241-AN-03A
3" SN-263	241-AN-03A	To 241-AN-03A
2" SL-160†	241-AN-B	To 241-AZ-02A
2" SN-260†	241-AN-B	To 241-AZ-02B
241-AP Flush Pit		
2" Flush Water Line	241-AP-VP	To 241-AP-VP

Table 1. Active Transfer Lines and Transfer Structures. (7 sheets)

Tank System and Ancillary Piping Identification	Leak Detection Location*	Waste Route
241-AP Valve Pit		
2" DR-712	241-AP-03D	To 241-AP-103
3" SN-609	241-AP-VP	To 241-AW-02A
3" SN-610	241-AP-VP	To 241-AW-02A
3" SN-611	241-AP-01A	To 241-AP-01A
3" SN-612	241-AP-02A	To 241-AP-02A
3" SN-613	241-AP-03A	To 241-AP-03A
3" SN-614	241-AP-04A	To 241-AP-04A
3" SN-615	241-AP-05A	To 241-AP-05A
3" SN-616	241-AP-06A	To 241-AP-06A
3" SN-617	241-AP-07A	To 241-AP-07A
3" SN-618	241-AP-08A	To 241-AP-08A
2" SL-511	241-AP-01A	To 241-AP-01A
2" SL-512	241-AP-02A	To 241-AP-02A
2" SL-513	241-AP-03A	To 241-AP-03A
2" SL-514	241-AP-04A	To 241-AP-04A
2" SL-515	241-AP-05A	To 241-AP-05A
2" SL-516	241-AP-06A	To 241-AP-06A
2" SL-517	241-AP-07A	To 241-AP-07A
2" SL-518	241-AP-08A	To 241-AP-08A
241-AW Flush Pit		
1" Flush Water Line	241-AW-02E	To 241-AW-02E
241-AW Valve Pit A		
3" SN-220†	241-AW-A	To 241-A-A
3" SN-261	241-AW-01A	To 241-AW-01A
3" SN-263	241-AW-03A	To 241-AW-03A
3" SN-265	241-AW-05A	To 241-AW-05A
3" SN-267	241-AW-02A	To 241-AW-02A
3" SN-271	241-AW-B	To 241-AW-B
2" SL-161	241-AW-01A	To 241-AW-01A
2" SL-163	241-AW-03A	To 241-AW-03A
2" SL-165	241-AW-05A	To 241-AW-05A
2" SL-168	241-AW-A	To 242-A Evaporator
2" SL-169	241-AW-B	To 241-AW-B
2" SL-510	241-AP-VP	To 241-AP-VP
241-AW Valve Pit B		
3" SN-262	241-AW-02A	To 241-AW-02A

Table 1. Active Transfer Lines and Transfer Structures. (7 sheets)

Tank System and Ancillary Piping Identification	Leak Detection Location*	Waste Route
3" SN-264	241-AW-04A	To 241-AW-04A
3" SN-266	241-AW-06A	To 241-AW-06A
3" SN-268	241-AW-02A	To 241-AW-02A
3" SN-274	241-AW-04A	To 241-AW-04A
2" SL-162	241-AW-02A	To 241-AW-02A
2" SL-164	241-AW-04A	To 241-AW-04A
2" SL-166	241-AW-06A	To 241-AW-06A
2" SL-167	241-AW-B	To 242-A Evaporator
2" SL-509	241-AP Valve Pit	To 241-AP Valve Pit
241-AW-02D Pit		
10" DR-334	241-AW-02D	From 242-A Evaporator
10" DR-335	241-AW-02D	From 242-A Evaporator
3" DR-338	10" DR-334	From 242-A Evaporator
6" DR-343	241-AW-02D	From 242-A Evaporator
241-AW-02E Feed Pump Pit		
3" SN-269	241-AW-02E	To 242-A Evaporator
3" SN-270	241-AW-02E	To 242-A Evaporator
3" SN-272	241-AW-02E	To 241-AW-02A
241-AX Diversion Box		
3-4" PW-4503/C108†	241-AY-101	To 241-AY-101
3-4" PW-4506/C106†	241-AY-102	To 241-AY-102
4" PW-4509/4507†	241-AZ-101	To 241-AZ-101
4" PW-4512/4600†	241-AZ-102	To 241-AZ-102
241-AX Valve Pit A		
3" SN-600†	241-AZ-02B	To 241-AZ-02B
2" SL-101†	241-AX-A	To 241-A-A
3" SN-201/214†	241-AX-A	To 241-A-A
2" SL-110†	241-AX-A & 241-AX-B	To 241-A-B
3" SN-210†	241-AX-A & 241-AX-B	To 241-A-B
241-AX Valve Pit B		
2" SL-100†	241-AX-B	To 241-A-B
3" SN-200/213†	241-AX-B	To 241-A-B
2" SL-502†	241-AY-02D	To 241-AY-02D
241-AY-01A Pump Pit		
3" PW-4513†	241-AY-01A	To 241-AY-151
2" SL-505†	241-AY-01A	To 241-AY-01D

Table 1. Active Transfer Lines and Transfer Structures. (7 sheets)

Tank System and Ancillary Piping Identification	Leak Detection Location*	Waste Route
241-AY-02A Pump Pit		
4" SL-100	241-C-06A	From 241-C-06A
2" SL-503†	241-AY-01A	To 241-AY-02D
2" SL-504†	241-AY-02A	To 241-AY-01D
3" SN-633	241-AZ-VP	To 241-AZ-VP
3" SN-635	241-AP-01A	To 241-AP-01A
241-AY-02D Pit		
3" V-720	241-AY-02D	From 241-AR-151
241-AY-02E Pit		
4" SN-200	241-C-06A	To 241-C-06A
241-AZ-02A Pump Pit		
2" SL-500†	241-AZ-02A	To 241-AX-A
2" SL-501†	241-AZ-01A	To 241-AZ-01A
3" PSW-D602†	241-AZ-02A	From 241-AZ-152
3" SN-632	241-AZ-01A	To 241-AZ-VP
241-AZ Valve Pit		
3" SN-630	241-AN-01A	To 241-AN-01A
3" SN-634	241-AZ-VP	To 241-AP-02D (future)
3" SN-637	241-AZ-VP	To Waste Treatment Plant (future)
241-AZ-151 Catch Tank		
3" PW-4605†	241-AZ-151 Catch Tank Pump Pit	To 241-AZ-152
241-AZ-152 Diversion Box		
3" PW-4606†	241-AZ-02A	To 241-AZ-02A
3" PW-4607†	241-AZ-01A	To 241-AZ-01A
3" PW-4608/4550†	241-AZ-152	To 241-AY-01A
6" PSW-D602†	241-AZ-02A	To 241-AZ-02A
6" PSW-D603†	241-AZ-01A	To 241-AZ-01A
6" PSW-S603†	241-AZ-02B	To 241-AZ-02B
6" PSW-S605†	241-AZ-02C	To 241-AZ-02C
6" PSW-S608†	241-AZ-01B	To 241-AZ-01B
6" PSW-S609†	241-AZ-01C	To 241-AZ-01C
3" NHW-V-719†	241-AZ-152	To 241-AX-155
241-AZ-01A Pump Pit		
3" PW-4621†	241-AZ-01C	To 241-AZ-01C
3" PW-4622/3654†	241-AZ-01B	To 241-AZ-01B
241-AZ-01C Pit		
2" SN-601†	241-AZ-02B	To 241-AZ-02B

Table 1. Active Transfer Lines and Transfer Structures. (7 sheets)

Tank System and Ancillary Piping Identification	Leak Detection Location*	Waste Route
241-AZ-02A Pump Pit		
4" PSW-D604†	241-AZ-02A	To 241-AZ-02C
6" PSW-S607†	241-AZ-02A	To 241-AZ-02B
241-ER-311 Catch Tank		
2" V224†	241-ER-151	241-ER-311 Pump Pit to 241-ER-151
244-BX DCRT (Transfer Route)		
3" SN-9808†	244-BX	244-BX to 241-ER-151
3" PSN-V228†	241-ER-153	241-ER-151 to 241-ER-153
3" PSN-V229†	241-ER-152	241-ER-151 to 241-ER-152
3" SN-244†	241-ER-153	241-ER-152 to 241-ER-153
3" SN-232†	244-A	241-ER-153 to 244-A
3" SN-234†	244-A	241-ER-153 to 244-A
DST Annulus Pump Pits		
2" PW-471	241-AN-01B	To 241-AN-01A
2" PW-472	241-AN-02B	To 241-AN-02A
2" PW-473	241-AN-03B	To 241-AN-03A
2" PW-474	241-AN-04B	To 241-AN-04A
2" PW-475	241-AN-05B	To 241-AN-05A
2" PW-476	241-AN-06B	To 241-AN-06A
2" PW-477	241-AN-07B	To 241-AN-07A
2" PW-811	241-AP-01B	To 241-AP-01A
2" PW-812	241-AP-02B	To 241-AP-02A
2" PW-813	241-AP-03B	To 241-AP-03A
2" PW-814	241-AP-04B	To 241-AP-04A
2" PW-815	241-AP-05B	To 241-AP-05A
2" PW-816	241-AP-06B	To 241-AP-06A
2" PW-817	241-AP-07B	To 241-AP-07A
2" PW-818	241-AP-08B	To 241-AP-08A
2" PW-471	241-AW-01B	To 241-AW-01A
2" PW-472	241-AW-02B	To 241-AW-02A
2" PW-473	241-AW-03B	To 241-AW-03A
2" PW-474	241-AW-04B	To 241-AW-04A
2" PW-475	241-AW-05B	To 241-AW-05A
2" PW-476	241-AW-06B	To 241-AW-06A
2" PW-4528†	241-AY-101	To 241-AY-101
2" PW-4529†	241-AY-02F	To 241-AY-102
2" PW-4531†	241-AY-01F	To 241-AY-01A

Table 1. Active Transfer Lines and Transfer Structures. (7 sheets)

Tank System and Ancillary Piping Identification	Leak Detection Location*	Waste Route
2" PW-4532†	241-AY-02F	To 241-AY-02A
2" PW-4609†	241-AZ-02F	241-AZ-02F to 241-AZ-02A
2" PW-4610†	241-AZ-102	241-AZ-02F to 241-AZ-102
2" PW-4620†	241-AZ-101	241-AZ-01F to 241-AZ-101
2" PW-4623†	241-AZ-01A	241-AZ-01F to 241-AZ-01A
DST Leak Detection Pits		
2" PW-461	241-AN-01C	To 241-AN-01A
2" PW-462	241-AN-02C	To 241-AN-02A
2" PW-463	241-AN-03C	To 241-AN-03A
2" PW-464	241-AN-04C	To 241-AN-04A
2" PW-465	241-AN-05C	To 241-AN-05A
2" PW-466	241-AN-06C	To 241-AN-06A
2" PW-467	241-AN-07C	To 241-AN-07A
2" PW-823	241-AP-03C	To 241-AP-03A
2" PW-825	241-AP-05C	To 241-AP-05A
2" PW-461	241-AW-01C	To 241-AW-01A
2" PW-462	241-AW-02C	To 241-AW-02A
2" PW-463	241-AW-03C	To 241-AW-03A
2" PW-464	241-AW-04C	To 241-AW-04A
2" PW-465	241-AW-05C	To 241-AW-05A
2" PW-466	241-AW-06C	To 241-AW-06A
2" PW-4522†/4526†	Leak Detection Pit AY-101-A	To 241-AX-152
2" PW-4522†/4526†	Leak Detection Pit AY-101-B	To 241-AX-152
2" PW-4523†/4526†	Leak Detection Pit AY-102-A	To 241-AX-152
2" PW-4602†	241-AZ-151	Leak Detection Pit AZ-101 to Catch Tank 241-AZ-151
2" PW-4603†/4602†	241-AZ-151	Encasement Leak Detection Pit AZ-101/102 to Catch Tank 241-AZ-151
2" PW-4604†/4602†	241-AZ-151	Leak Detection Pit AZ-102 to Catch Tank 241-AZ-151

† Line is non-compliant and cannot be used after June 30, 2005.

* This is the low-point of the transfer line where leak detection is located. Note: Certain lines do not have low-point leak detection in a structure (e.g., SN-650 with encasement leak detection only).

2.3.2 Process Functions at System Interface

Transferring Waste from a DST to the 242-A Evaporator

Tank 241-AW-102 is the feed tank for the 242-A Evaporator and is used for all waste transfers to the 242-A Evaporator. Any waste designated for concentration is pumped to Feed Tank 241-AW-102 for transfer to the 242-A Evaporator. The 241-AW-02E Feed Pump Pit uses 3-in. supernatant transfer line SN-269 or SN-270 to feed waste to the evaporator.

Transferring Waste from the 204-AR Unloading Facility to any DST

Transfer line LIQW-702 provides a transfer route from the 204-AR to the 241-A-A Valve Pit. From the valve pit, waste can be transferred to any tank farm as previously described. Monitor and control of this transfer will be described in the pending 204-AR Facility SDD, see Appendix E.

Transferring Waste from the Replacement Cross-Site Transfer System to any Double-Shell Tank

The RCSTS transfer lines terminate at the 244-A DCRT pump pit. Transfer lines SN-215 and SN-216 provide transfer routes from the 244-A DCRT pump pit to the 241-A-A or -B Valve Pit. From these valve pits, waste can be transferred to any tank farm. Monitor and control of this transfer is described in RPP-15136, *System Design Description for the Replacement Cross-Site Transfer System Between 200 West and 200 East Tank Farms.*

Transferring Waste from the Single-Shell Tank Waste Transfer System

Transfer lines SL-107 at the 241-A-A Valve Pit and SL-108 at the 241-AX-A Valve Pit provide transfer routes from the SST WTS to the 200 East Area DST WTS.

An SST WTS interface also occurs at the 244-BX DCRT. Transfer line SN-9808 provides a transfer route from the 244-BX DCRT to pit 241-ER-151, transfer line PSN-V228 (or transfer line PSN-V229 to pit 241-ER-152 then through transfer line SN-244) provides a transfer route from pit 241-ER-151to pit 241-ER-153, transfer line SN-232 or SN-234 provides a transfer route from 241-ER-153 to the 244-A DCRT pump pit, and transfer lines SN-215 and SN-216 provide transfer routes from the 244-A DCRT pump pit to the 241-A-A or -B Valve Pits.

Transfer line SL-100 from pit 241-C-06A to pit 241-AY-02A and transfer line SN-200 from the 241-AY-02E pit to pit 241-C-06A are available for potential waste retrieval operations from the SST 241-C tank farm. These lines were installed as dedicated lines for sluicing tank waste from tank 241-C-106 and are still available as a potential SST WTS interface. Lines SN-215 and SN-216 provide transfer routes from the RCSTS through the 244-A DCRT pump pit to the 241-A-A or -B Valve Pits.

Receive New Liquid Waste into Double-Shell Tanks from Facilities

During the Site's production mission, the DST tank facility received waste streams from several sources, including the Plutonium-Uranium Extraction (PUREX) Plant, and B Plant (see

FDM-T-020-00002, *Waste Transfer and Routing Facilities, Facility Description Manual).* Currently, the DST WTS normally does not receive or transport new waste from facilities. However the facilities still exist and this off-normal function is expected to occur. It is unknown when, how much waste, at what pressure, waste composition, and timing of future transfers.

2.3.3 Environmental Protection Function

An objective of the 200 East Area DST WTS design is to minimize worker and public exposure and to meet ALARA requirements through remote operations and underground transfer. The system design also reduces the safety and environmental risks of a radiological release by providing low-point leak detection in the encasement pipe and/or the terminating transfer-associated structure. Should a leak occur in the transfer line, the leaked waste would be routed to the transfer structure and returned to a DST or catch tank. The leak would be detected as described in Section 2.3.2.

The leak detection system encompasses the leak detection equipment associated with the pump pits, sluice pits, valve pits, COBs, diversion boxes, transfer boxes, and encased transfer lines. This part of the system includes dual-probe electrodes, induction-type relays, fail-safe relays, transmitters, and reset switches. Leak detection conductivity probes are located in the central pump, tank, annulus, leak detection, valve, flush, and service pits, and COBs. Identical control stations usually hold single-mounted detection monitors for the central pump, annulus pump, and leak detection pits. The other part of the leak detection system monitors the encased transfer lines using leak detection risers.

Leak detection risers are located at the low end of the encased line and are either capped risers or probe risers. The capped risers are used to add water for pressure testing and testing of the leak detection alarm system. The probe riser contains an electrode connected to a leak detection station and alarm system. Leakage into an encasement pipe flows to the leak detection riser to be contained at the seal loop inside the pit. Opening the seal loop valve allows liquid to flow to the pit floor drain.

The style of leak detection currently used in the AY and AZ Tank Farms transfer lines is the encasement leak detection pit. The leak detection pit uses a specific-gravity/weight-factor system to measure liquid levels at the bottom of the well. The waste transfer line intersects the encasement leak detection pit well. The encasement leak detection well has approximately 20 in. of water at the bottom. A weight factor dip tube monitors the fluid height in the tube. The leak detection equipment is housed in the leak-detection pit transmitter enclosure located adjacent to the leak-detection pits. Zip cords also may be used to monitor for level changes.

Typically a specific-gravity/weight-factor system consists of three dip tubes, sometimes called bubbler tubes, extending into the liquid storage space and a signal transmitter station. The transmitter converts the static pressure signals into pneumatic control signals for remote recording and alarm activation. Two of the three dip tubes extend into the liquid; one terminates just above the bottom of the pit well and the other terminates about 10 in. above the first tube. The third dip tube terminates in the air space just above the highest predictable liquid level. If the fluid level unexpectedly changes during a waste transfer, the transfer activity is stopped. For

further information see RPP-15135, *System Design Description for AY/AZ Tank Farm Double-Shell Tank Waste Storage System.*

This page intentionally left blank.

3.0 REQUIREMENTS AND BASES

The 200 East Area DST WTS contains various SSCs to fulfill its process, safety, and environmental protection functions. This chapter focuses on the requirements for the 200 East Area DST WTS components and subsystems: the process piping, miscellaneous transfer structures, and instrumentation and control system and MPSS.

Each SSC has five categories of system requirements: general, special, engineering disciplinary, testing and maintenance, and other requirements. The specific requirements, their bases, and how the system design meets those specific requirements are described for each requirements category.

New design and construction work involving the 200 East Area DST WTS must conform to current codes, standards, and regulations as defined in the specifications completed for DST systems and subsystems, sometimes referred to as Level-1 and Level-2 specifications. The requirements for new work will be derived from the authorization basis for that work, as well as from the following system and subsystem specifications:

- HNF-SD-WM-TRD-007, *System Specification for the Double-Shell Tank System*
- HNF-4155, *Double-Shell Tank Monitor and Control Subsystem Specification*
- HNF-4157, *Double-Shell Tank Utilities Specification* (including electric, raw and potable water, and service and instrument air subsystems)
- HNF-4159, *Double-Shell Tank Maintenance and Recovery Subsystem Specification*
- HNF-4160, *Double-Shell Tank Transfer Valving Subsystem Specification*
- HNF-4161, *Double-Shell Tank Transfer Piping Subsystem Specification*
- HNF-4162, *Double-Shell Tank Transfer Pump Subsystem Specification.*

The Level-1 specification in this list is HNF-SD-WM-TRD-007. It establishes the functional, performance, design, development, interface, and test requirements for new DST systems. The remaining specifications are for Level-2 subsystems required by the Level-1 system specification.

3.1 GENERAL REQUIREMENTS (PROCESS PIPING)

3.1.1 System Functional Requirements

3.1.1.1 Process Functional Requirements

Requirement: Transfer liquid waste from DST to DST.

Basis: ARH-1437, *Design Criteria: PUREX AZ Tank Farm*, (AZ) and ARH-CD-362, *Functional Design Criteria: Additional High-Level Waste Storage Facilities* (AW).

How Requirement is Met: The 200 East Area DST WTS intrafarm piping provides transfer routes between the DSTs within a tank farm and from tank farm to tank farm. Details of the transfer lines provided are in Chapter 4.

Requirement: Transfer liquid waste from a catch tank or DCRT to a DST.

Basis: ARH-CD-304, *Functional Design Criteria: Additional High-Level Waste handling and Storage Facilities* (AN).

How Requirement is Met: The 200 East Area DST WTS inter-farm piping provides transfer routes from the active catch tanks and the 244-A and 244-BX DCRTs to a DST in the 200 East Area. Details about the transfer lines are provided in Chapter 4.

3.1.1.2 Safety Functional Requirements

Service Water Pressure Detection System

Requirement: The service water pressure detection system shall detect and limit the backflow of waste into non-waste transfer systems (e.g., service water, raw water, diluent systems)

Basis: RPP-13033, Chapter 4, "Safety Structures, Systems, and Components," Section 4.4.8, "Service Water Pressure Detection System."

How Requirement is Met: Service water pressure detection systems are designed and installed where service water piping interfaces with waste transfer piping. This system includes two valves that limit the backflow of waste into the service water system and a pressure switch between the valves that typically is set to actuate when pressure between the valves increases to 15 lb/in.^{2}. When a service water pressure detection system is required to be operable, periodic testing is performed to verify that the pressure detection switch actuates before pressure increases to 20 lb/in.^{2}.

Requirement: The service water pressure detection system shall have reasonable integrity when pressurized.

Basis: RPP-13033, Chapter 4, Section 4.4.8.

How Requirement is Met: The service water pressure detection system is designed to withstand pressures commensurate with the service water system. When a service water pressure detection system is required to be operable, periodic testing is performed to verify the integrity of components to limit backflow. When testing demonstrates that the service water pressure detection system has reasonable integrity when pressurized to 50 lb/in.^{2}, physical disconnection is considered to be at V2. When testing demonstrates that the service water pressure detection system has reasonable integrity when pressurized to the maximum WTS pressure, physical disconnection is considered to be at V1.

Requirement: The service water pressure detection system shall annunciate a service water pressure switch alarm to initiate operator response or actuate automatic shutdown of waste transfer pumps via the MPSS on detection of increased pressure.

Basis: RPP-13033, Chapter 4, Section 4.4.8.

How Requirement is Met: Actuation of the pressure switch sends an alarm signal to either an alarm station that can be monitored or to an MPSS. When a service water pressure detection system is required to be operable, periodic testing is performed to verify that the system alarms annunciates at a location that can be monitored in accordance with AC 5.11 (HNF-SD-WM-TSR-006) or that the alarm signal is transmitted to the MPSS.

Master Pump Shutdown System

Requirement: The MPSS shall shut down physically connected pumps when an alarm signal is received from the service water pressure detection system.

Basis: RPP-13033, Chapter 4, Section 4.4.9.

How Requirement is Met: The MPSS is designed and installed to shut down waste transfer pumps by opening the pump contactor when an alarm signal is received from the service water pressure detection system. When the MPSS is required to be operable, periodic testing is performed to verify that an alarm signal received from the service water pressure detection system causes associated waste transfer pump contactors to open.

Backflow Preventers

Requirement: Backflow preventers shall prevent the backflow of waste into non-waste transfer systems.

Basis: RPP-13033, Chapter 4, Section 4.4.5, "Backflow Preventers."

How Requirement is Met: Backflow preventers installed for this purpose are of model types included on the approved list of backflow preventers for Washington State at the time of installation, in accordance with the WAC. The backflow preventer assemblies on this list have met the design, operation, and testing standards of the Foundation for Cross Connection Control and Hydraulic Research at the University of Southern California. Functional testing is performed in accordance with WAC 246-290-490, "Cross Connection Control," to demonstrate that the following performance criteria are met:

- The reduced pressure relief valve shall open at 2 lb/in^2 or greater differential pressure across Check Valve No. 1 to vent fluid trapped in the chamber.
- Check Valve No. 2 shall close tight under backpressure conditions maintaining a differential pressure across the valve above the relief valve opening value.
- Check Valve No. 1 shall close tight under backpressure conditions maintaining a differential pressure across the valve at least 3 lb/in^2 greater than the relief valve opening pressure.

Isolation Valves for Double-Valve Isolation

Requirement: Waste transfer isolation valves used for double-valve isolation shall limit the misroute of waste into physically disconnected (i.e., isolated) waste transfer lines and limit the backflow of waste into non-waste transfer systems (e.g., service water, raw water, diluent systems).

Basis: RPP-13033, Chapter 4, "Section 4.4.6, "Isolation Valves for Double Valve Isolation."

How Requirement is Met: RPP-13033, credits isolation valves as an effective control if they provide sufficient sealing to prevent gross leakage (e.g., gallons/minute). Isolation valves used for this purpose shall be demonstrated as qualified by either of the following:

- Leak testing in accordance with ANSI/FCI-70-2, *Control Valve Seat Leakage*
- In-service pressure testing in accordance with ASME B31.3, *Process Piping.*

3.1.1.3 Environmental Protection Functional Requirements

Requirement: Contain materials (confinement) and prevent releases to the environment.

Basis: WAC 173-303-400, "Interim Status Facility Standards," and WAC-173-303-640, "Tank Systems."

How Requirement is Met: Buried portions of the piping system are designed with an encasement between structures. Jumpers and manifolds located within the transfer structures are fully contained within a closed structure. This design provides two barriers to contain materials and prevent releases to the environment (see Appendix A). In some cases (e.g., lines from flush pits to waste transfer structures), lines are not encased because they are not part of a waste transfer line. Also at the interface between some waste transfer lines and waste transfer structures, the encasement does not extend through the waste transfer structure wall. Waste transfer lines that are not encased are pressure-tested annually before use to ensure their integrity.

Requirement: Mitigate the consequences of any accidental releases or leakage.

Basis: WAC 173-303 and DOE Order 6430.1A, *General Design Criteria*, Section 1300-7.

How Requirement is Met: Low-point encasement leak detection is provided in most transfer lines. Transfer leak detection is provided for waste transfer structures and is considered a Safety-Significant control. Waste transfer-associated structures provide a barrier to prevent leaked waste from entering the environment.

Requirement: Direct the flow of leaked waste from the primary line to a waste transfer-associated structure for detection.

Basis: DOE Order 6430.1A, Section 1300-3; and ARH-1437 (AZ).

How Requirement is Met: Buried portions of the piping system between structures are designed with an encasement. The encasement drain piping is provided at the transfer structures to allow leaked waste to enter the structure. The jumper and manifolds within the structures are not encased and allow waste to leak directly to the structure. The waste

transfer-associated structures found in the DST WTS are considered to perform the function of secondary waste confinement.

Requirement: Provide confinement of waste to minimize the potential for leakage (passive).

Basis: HNF-SD-WM-TSR-006, Appendix B, and DOE Order 6430.1A, Section 1323-5.2.

How Requirement is Met: Most of the 200 East Area DST WTS process piping is of all-welded construction and provides a confinement barrier to confine waste for all transfer routes in the 200 East Area. All containment welds are examined by 100-percent radiograph (reference Construction Specifications B-102-C1, *Construction Specification for the Salt Cake Storage Facility 241-A and 241-AX Tank Farm Completion Project B-130*, B-120-C7, *Construction Specification for the 241-AW Tank Farm Completion Project B-120*, B-130-C7, *Construction Specification for the 241-AN Tank Farm Completion Project B-120*, B-131-C1, *Construction Specification for Terminal Liquor Transfer Facility for 241-AX, AY, and AZ Project B-131*, and B-340-C7, *Construction Specification for the 241-AP Tank Farm Completion*). Pits and some piping routes use concrete to provide secondary containment (e.g., transfer routes from pit 241-AX-155 and catch tank 241-AZ-151 are encased in concrete and currently are in use). Some drain lines are direct-buried and some transfer lines have encasements that terminate outside of the connected waste transfer-associated structure, providing potential for direct waste leakage to the soil. By June 30, 2005, these routes no longer will be used.

Requirement: Prevent leaked waste from jetting directly to the atmosphere (passive).

Basis: HNF-SD-WM-TSR-006, Appendix B

How Requirement is Met: Buried piping is fully encased. The above-grade portion of the transfer structures and cover blocks provide a barrier to prevent leaked waste from jetting directly to the atmosphere. Pits and some piping routes use concrete or steel plate covers to provide secondary containment.

3.1.2 Subsystems and Major Components

3.1.2.1 Primary Confinement Piping

Requirement: The primary piping and encasements shall be fully drainable and shall be designed and fabricated to minimize crud traps.

Basis: ARH-1437 (AZ), ARH-CD-304 (AN), SD-340-FDC-001, *Functional Design Criteria: Project B-340, 241-AP Tank Farm*, and DOE Order 6430.1.A.

How Requirement is Met: The 200 East Area DST WTS piping is continuously sloped as identified in the piping plans listed in Appendix A. Some especially applicable drawings are Hanford Site Drawings H-2-69183, *Piping Plan 242-A Building Area*, H-2-70398, *Piping Plan 241-AW Tank Farm to 242-A Bldg*, H-2-70763, *Piping Plan, 241-AZ-A to 241-AZ, 241-AX-B to 241-AY*, H-2-71986, *Piping Plan, 241-AN Tank Farm*, and H-2-90543, *Piping Plan #1, 241-AW Tank Farm*. In some cases, complete encasement low-point drainage is limited by an encasement drain line seal loop.

Requirement: The primary piping shall slope continuously from the high points to transfer-associated structures with a minimum slope of 0.25 percent.

Basis: SD-340-FDC-001 (AP), DST farm piping specifications and HNF-4160, HNF-4161, and HNF-4162.

How Requirement is Met: The piping is installed per the requirement. See: H-2-69183, H-2-70398, H-2-70763, H-2-71986, and H-2-90543.

Requirement: Pipe bends in the primary piping should have a minimum bend radius of five pipe diameters.

Basis: DST tank farm piping specifications, HNF-4160, 4161, and 4162, and DOE Order 6430.1A.

How Requirement is Met: The piping is installed per the requirement. See H-2-69183, H-2-70398, H-2-70763, H-2-71986, and H-2-90543.

Requirement: The slurry piping shall be designed to maintain a slurry velocity of 3 to 10 ft/sec over the slurry pump range of 32 to 100 gal/min to keep the slurry solids from settling in the piping.

Basis: ARH-CD-362 (AW), ARH-CD-304 (AN), SD-340-FDC-001 (AP) and DOE Order 6430.1A.

How Requirement is Met: The slurry piping is all 2-in. schedule 40 piping (Hanford Site Drawings H-2-69183, H-2-70398, H-2-70763, H-2-71986, and H-2-90543). Based on Crane[2] "Flow of Fluids," the velocity in this size of pipe will range from 3.1 to 9.6 ft/sec at a flow of 32 to 100 gal/min. Normally, pump flows significantly exceed 32 gal/min. (See vendor information about pumps for examples of typical deep well turbine pump flow curves.)

Requirement: All process piping, including process drain lines, shall be encased to collect and detect any leakage from the primary process piping.

Basis: ARH-CD-362 (AW), ARH-CD-304 (AN), SD-340-FDC-001 (AP), and DOE Order 6430.1A.

How Requirement is Met: Buried portions of the piping system between structures are designed with an encasement (reference Pipe Code M-26 or M-26a in Construction Specifications B-102-C1, B-120-C7, B-130-C7, B-131-C1, and B-340-C7). Pits and some piping routes use concrete to provide secondary containment. For example, transfer routes from pit 241-AX-155 and catch tank 241-AZ-151 are encased in concrete and currently are in use. Not all noncompliant concrete incased routes have been identified. By June 30, 2005, these noncompliant routes no longer will be used unless an exemption is in place to allow use.

[2] Crane is a registered trademark of the Crane Company.

3.1.2.2 Valve Manifolds/Jumper Assemblies

Requirement: The valve manifolds and jumpers shall provide the primary containment boundary for waste routed through transfer-associated structures.

Basis: ARH-CD-362 (AW) and ARH-CD-549, *Functional Design Criteria: Additional High-Level Waste Handling and Storage Facilities.*

How Requirement is Met: The 200 East Area DST WTS valve manifolds and jumpers are of all-welded construction and were built and pressure tested to ASME B31.1, *Power Piping* (or ANSI/ASME B31.3, *Process Piping*), requirements (reference SD-RE-DGS-002, *Jumper Design Standard*). PUREX nozzles, which are jumper connectors, are noncode items that are pressure tested to verify design pressures.

Requirement: The valve manifolds and jumpers shall be designed and fabricated to minimize crud traps.

Basis: SD-340-FDC-001 (AP).

How Requirement is Met: The 200 East Area DST WTS jumper assemblies normally are designed to be level with no traps to facilitate draining. When jumpers cannot be designed to be level, they are designed to drain to the lower attachment nozzle in the pit. In some cases low points can be designed into jumpers to allow instrumentation (magnetic flow meters) to operate correctly. These traps are designed to be flushable and minimize the chance and risk of crud traps (SD-RE-DGS-002). In some instances flexible jumpers are used that might have low points; however, design length of the jumpers is minimized to minimize the volume of any potential crud trap.

3.1.2.3 Transfer Pumps

Requirement: The 200 East Area DST WTS transfer pumps shall be capable of removing supernatant, dissolved salts, and suspended salts from source tanks and transferring them to destination tanks.

Basis: SD-340-FDC-001 (AP), ARH-CD-304 (AN), ARH-CD-362 (AW), and ARH-CD-549.

How Requirement is Met: Most of the 200 East Area DST WTS transfer pumps are vertical turbine pumps that were procured in accordance with the requirements given by a combination of a purchase order, referenced drawings, and/or a specification. Generally, pumps were bought in batches with similar design characteristics. See Appendix C for pump vendor information.

3.1.3 Boundaries and Interfaces

3.1.3.1 Waste Storage Tank System

Requirement: Recirculate liquid waste within DSTs 241-AN-107 and 241-AN-102 during chemical addition process.

Basis: RPP-9771, *Tank 241-AN-107 Caustic Addition Project System Design Description*, and RPP-7984, *Project Definition Criteria for Tanks 241-AN-102 and Tank 241-AN-107.*

How Requirement is Met: The 200 East Area DST WTS transfer pumps and jumpers provide the necessary interface during the Caustic Addition Project to prevent the waste from jelling. This is required in Tanks 241-AN-102 and 241-AN-107 and their associated pumps. This also is reflected in Hanford Site Drawing H-14- 020806, *Waste Transfer System (WT) O&M System P&ID.*

3.1.3.2 Water Supply and Distribution

Requirement: The water supply and distribution system shall provide flush water to the waste transfer system.

Basis: ARH-CD-304 (AN), ARH-CD-362 (AW), and ARH-CD-549.

How Requirement is Met: Raw water is supplied at the waste transfer valve pits from the flush pits. A 2-in. PUREX nozzle is provided for interface with the WTS jumpers. Currently only one flush pit (AW) is operable. The water supply and distribution system SDD[3], which has not yet been written, and Hanford Site drawings provide more information.

3.1.3.3 Electrical Distribution

Requirement: The electrical distribution system shall provide 120-V (ac), single-phase power and 480-V (ac), 3-phase power to the WTS.

Basis: SD-340-FDC-001 (AP), ARH-1437 (AZ), ARH-205, *Design Criteria PUREX AY Tank Farm*, ARH-CD-362 (AW), and ARH-CD-549.

How Requirement is Met: The 120-V (ac) and 480-V (ac) power is fed to the WTS for transfer pumps, heat trace, leak detection, and miscellaneous instrumentation. See Appendix E for the titles and numbers of the electrical distribution system SDDs.

3.1.3.4 Cathodic Protection System

Requirement: The cathodic protection system shall minimize process waste line failures.

Basis: SD-340-FDC-001 (AP) and ARH-1437 (AZ).

How Requirement is Met: All of the active carbon steel waste transfer lines are tied to the cathodic protection system.

3.1.3.5 Double-Contained Receiver Tanks

Requirement: Transfer liquid waste from the ~~244-A DCRT and other~~ active DCRTs to any DST.

Basis: Process functional requirement. See Section 2.1.

---

[3] Water Supply and Distribution SDD to be released in FY 03. See Appendix E for the SDD matrix.

How Requirement is Met: The 244-BX DCRT serves as an interface between the SST WTS and the 200 East Area DST WTS, with the 200 East Area WTS transfer line SN-9808 connecting other 200 East Area DST WTS transfer lines and waste transfer-associated structures to the 244-A DCRT pump pit (see Table 1). The RCSTS interfaces with the 200 East Area DST WTS at the 244-A DCRT pump pit (Hanford Site Drawings H-2-822320, *Jumper Arrangement Lift Station 244-A*, and H-14-020806). The 200 East Area DST WTS provides transfer lines SN-215 and SN-216 from the 244-A DCRT pump pit to Valve Pits A-A and A-B. From the valve pits the transfer system connects to the piping system for transfer to any DST in the 200 East Area. The 244-A DCRT pump pit is used as a transfer pit, and the 244-A DCRT serves as a catch tank, rather than as a DCRT.

3.1.3.6 Replacement Cross-Site Transfer System

The RCSTS interfaces with the 200 East Area DST WTS at the 244-A DCRT. The244-A DCRT interface requirement are covered in Section 3.1.3.5.

3.1.3.7 204-AR Unloading Facility

Requirement: Transfer liquid waste from the 204-AR Unloading Facility to any DST.

Basis: Process functional requirement.

How Requirement is Met: The 200 East Area DST WTS provides transfer line LIQW-702 from the 204-AR Unloading Facility that connects to the piping system for transfer to any DST in the 200 East Area (Hanford Site Drawings H-2-70760, *Engineering Flow Diagram Valve Pits to 241-AX AY & AZ Tanks*, and H-14-020806 (see Appendix A).

3.1.3.8 242-A Evaporator

Requirement: Transfer liquid waste from the DST to the 242-A Evaporator within a range of 70 gal/min to 120 gal/min for up to 2 months.

Basis: ARH-CD-362 (AW).

How Requirement is Met: The 200 East Area DST WTS Tank 241-AW-102 is the feed tank for the 242-A Evaporator. Any waste designated for concentration is pumped to Feed Tank 241-AW-102 for transfer to the 242-A Evaporator. Transfer lines SN-269 and SN-270 provide a transfer route from the feed tank pump pit to the evaporator (Hanford Site Drawing H-2-70398). The transfer pump installed is capable of pumping waste in the range specified.

Requirement: The 200 East Area DST WTS shall be capable of continuously receiving evaporator slurry at a nominal 30 gal/min to 70 gal/min for up to 2 months.

Basis: The 242-A Evaporator interface was described in HNF-3395, *Interface Control Document Between the Double-Shell Tanks (DST) System and the 242-A Evaporator Facility*, Section 4.2. The 242-A Evaporator is in the process of contract transition. This requirement, basis, and how the requirement is met segment will be revised to reflect the redefined basis when interface revision is completed.

How Requirement is Met: The 200 East Area DST WTS transfer lines can support this requirement and a slurry receiver tank is chosen based on the volume requirements.

Requirement: The 200 East Area DST WTS shall transfer waste from the slurry receiver tank to the feed tank, Tank 241-AW-102, as necessary to allow multiple passes through the Evaporator to achieve the desired waste volume reduction.

Basis: The 242-A Evaporator interface is described in HNF-3395, Section 4.2. The 242-A Evaporator is in the process of contract transition. This requirement, basis, and how the requirement is met segment will be revised to reflect the redefined basis when interface revision is completed.

How Requirement is Met: The 200 East Area DST WTS intrafarm piping provides transfer routes between all of the DSTs within a tank farm as described in Section 3.1.1.1 of this document.

Requirement: The 200 East Area DST WTS shall be capable of accepting an emergency purge volume of up to 26 kgal of waste in 8 minutes from the 242-A Evaporator to Tank 241-AW-102. During some deep flush or hydro test activities, flush volumes can be up to 36 Kgal.

Basis: The 242-A Evaporator interface is described in HNF-3395, Section 4.2. The 242-A Evaporator is in the process of contract transition. This requirement, basis, and how the requirement is met segment will be revised to reflect the redefined basis when interface revision is completed.

How Requirement is Met: Transfer lines are in place to transfer this emergency purge volume back to Tank 241-AW-102. The volume in the tank is administratively controlled to ensure that the flush volume can be accepted. See OSD-T-151-0007, *Operation Specifications for the Double Shell Storage Tanks* for the volume limit for Tank 241-AW-002.

3.1.3.9 SST Waste Transfer System

Requirement: Transfer liquid waste from the SST WTS.

Basis: SD-340-FDC-001 (AP).

How Requirement is Met: The 200 East Area DST WTS provides interfaces at Valve Pit 241-A-A, Valve Pit 241-AX-A, DCRT 244-BX, and DCRT 244-A for the SST WTS. Details are provided in Chapter 4.

3.1.4 Codes, Standards, and Regulations

The safety basis for the 200 East Area DST WTS is the same as that for all other facilities associated with RPP activities and is given in RPP-13033. At the time the WTS was designed, the applicable codes, standards, regulations, and DOE orders required for establishing the safety basis were the latest revision of the following:

- 10 CFR 830.120, "Quality Assurance Requirements"

- 10 CFR 835, "Occupational Radiation Protection"
- DOE Order 5400.5, *Radiation Protection of the Public and the Environment*
- DOE Order 5480.7A, *Fire Protection*
- DOE Order 5480.11, *Radiation Protection for Occupational Workers*
- DOE Order 5480.28, *Natural Phenomena Hazards Mitigation*
- DOE Order 5820.2A, *Radioactive Waste Management*
- DOE Order 6430.1A
- DOE O 414.1A, *Quality Assurance*
- DOE O 420.1, *Facility Safety*
- DOE-STD-1020-94, *Natural Phenomena Hazards Design and Evaluation Criteria for Department of Energy Facilities*
- DOE-STD-1021-93, *Natural Phenomena Hazards Performance Categorization Guidelines for Structures, Systems, and Components*
- DOE-STD-1022-94, *Natural Phenomena Hazards Characterization Criteria*
- DOE-STD-1023-95, *Natural Phenomena Hazards Assessment Criteria.*

The following additional codes, standards, and regulations are applicable to the WTS. The revisions vary because of the time span over which the DST tank farms were constructed.

- American Concrete Institute (ACI)-issued ACI 318, *Building Code Requirements for Reinforced Concrete*
- ANSI/ASME B31.1, *Power Piping*; ANSI/ASME B31.3, *Process Piping*
- NFPA 70, *National Electric Code.*

3.1.5 Operability

System operability is based on the facility authorization basis, including RPP-13033, HNF-SD-WM-TSR-006, and other documents. The 200 East Area DST WTS has operability requirements specified in these authorization basis documents as follows.

3.1.5.1 TSR LCO 3.1.2 Backflow Prevention Systems

Backflow Preventers

The backflow preventers shall be considered operable if the following requirements are demonstrated to have been met.

> Requirement: The backflow preventer reduced pressure relief valve shall open at 2 lb/in.^{2} or greater differential pressure across Check Valve No. 1 to vent fluid trapped in the chamber.

Basis: RPP-13033, Chapter 4, Section 4.4.5.4.1, "Performance Criteria 1," HNF-SD-WM-TSR-006, and LCO 3.1.2, "Backflow Prevention Systems."

How Requirement is Met: Backflow preventers are procured and installed to meet this requirement. When backflow preventers are required to be operable, functional testing is performed every 365 days to verify that the assembly functions as designed when subjected to the test conditions representative of back-pressure and back-siphonage conditions. Testing verifies the differential pressure relief valve (TSR Surveillance Requirement (SR) 3.1.2.5).

Requirement: The Backflow Preventer Check Valve No. 2 shall close tight under backpressure conditions maintaining a differential pressure across the valve above the relief valve opening value.

Basis: RPP-13033, Chapter 4, Section 4.4.5.4.2, "Performance Criteria 2," and HNF-SD-WM-TSR-006, LCO 3.1.2.

How Requirement is Met: Backflow preventers are procured and installed to meet this requirement. When backflow preventers are required to be operable, functional testing is performed every 365 days to verify that the assembly functions as designed when subjected to the test conditions representative of back-pressure and back-siphonage conditions. Testing verifies the tightness of Check Valve No. 2 (TSR SR 3.1.2.5).

Requirement: The Backflow Preventer Check Valve No. 1 shall close tight under backpressure conditions maintaining a differential pressure across the valve at least 3 lb/in.^{2} greater than the relief valve opening pressure.

Basis: RPP-13033, Chapter 4, Section 4.4.5.4.3, Performance Criteria 3, and HNF-SD-WM-TSR-006, LCO 3.1.2.

How Requirement is Met: Backflow preventers are procured and installed to meet this requirement. When Backflow preventers are required to be operable, functional testing is performed every 365 days to verify that the assembly functions as designed when subjected to the test conditions representative of back-pressure and back-siphonage conditions. Testing verifies the tightness of Check Valve No. 1 (TSR SR 3.1.2.5).

Isolation Valves for Double-Valve Isolation

The isolation valves for double-valve isolation shall be considered operable if the following requirements are demonstrated to have been met.

Requirement: The isolation valves for double-valve isolation shall either be leak tested in accordance with ANSI/FCI-70-2, *Control Valve Seat Leakage*, or in-service pressure testing in accordance with ASME B31.3.

Basis: RPP-13033, Chapter 4, Section 4.4.6.4.1, "Performance Criteria 1," and HNF-SD-WM-TSR-006, LCO 3.1.2.

How Requirement is Met: Operability of isolation valves for double-valve isolation is ensured through performance of at least one of these prescribed tests once over the lifetime of the valve or after the valve undergoes major repair that could affect its

qualification. When isolation valves are used to provide backflow prevention, the two safety significant isolation valves are independently verified to be closed before removing an administrative lock from a physically connected waste transfer pump (TSR SR 3.1.2.6).

Service Water Pressure Detection System

The service water pressure detection system shall be considered operable if the following requirements are demonstrated to have been met.

Requirement: The service water pressure detection system alarm shall actuate before pressure increases to 20 lb/in.^{2}.

Basis: RPP-13033, Chapter 4, Section 4.4.8.4.1, "Performance Criteria 1," and HNF-SD-WM-TSR-006, LCO 3.1.2.

How Requirement is Met: The service water pressure detection system is designed and installed to meet this requirement. The switch is typically set to actuate when pressure increases to 15 lb/in.^{2}. When the service water pressure detection system is used as a method of backflow prevention and required to be operable, functional testing is performed every 182 days to verify that the pressure switch actuates before pressure increases to 20 lb/in.^{2} (TSR SR 3.1.2.1). When the service water pressure detection system is used to provide backflow prevention, appropriate system configuration (valve alignment) is verified before removing an administrative lock from a physically connected waste transfer pump (TSR SR 3.1.2.4).

Requirement: The service water pressure detection system shall have reasonable integrity when pressurized. For physical disconnection at V2, the system shall have reasonable integrity when pressurized to 50 lb/in^2. For physical disconnection at V1, the system shall have reasonable integrity when pressurized to the maximum waste transfer system pressure.

Basis: RPP-13033, Chapter 4, Section 4.4.8.4.2, "Performance Criteria 2," and HNF-SD-WM-TSR-006, LCO 3.1.2.

How Requirement is Met: The service water pressure detection system is designed to withstand pressures typical of the service water system. When the service water pressure detection system is required to be operable, functional testing is performed every 365 days to verify system integrity when pressurized to 50lb/in^2 or greater (TSR SR 3.1.2.3).

Requirement: The service water pressure detection system alarm shall annunciate at a location that can be monitored in accordance with HNF-SD-WM-TSR-006, AC 5.11.

Basis: RPP-13033, Chapter 4, Section 4.4.8.4.3, "Performance Criteria 3," and HNF-SD-WM-TSR-006, LCO 3.1.2.

How Requirement is Met: The service water pressure detection system is designed to annunciate an alarm at a remote alarm station. when the service water pressure detection system is required to be operable, and when alarm indication is relied on to initiate operators to manually shutdown transfer pumps, functional testing is performed every

182 days to verify that system alarms annunciate when the pressure switch is actuated (TSR SR 3.1.2.1).

Requirement: The service water pressure detection system alarm shall be transmitted to the MPSS.

Basis: RPP-13033, Chapter 4, Section 4.4.8.4.3, "Performance Criteria 3," HNF-SD-WM-TSR-006, LCO 3.1.2.

How Requirement is Met: The service water pressure detection system is designed to transmit an alarm signal to the MPSS. When the service water pressure detection system is required to be operable, and when the MPSS is relied on for automatic pump shutdown, functional testing is performed every 182 days to verify that system alarms are transmitted to the MPSS (TSR SR 3.1.2.1).

Master Pump Shutdown System

The MPSS shall be considered operable if the following requirements are demonstrated to have been met.

Requirement: The MPSS shall cause associated waste transfer pump contactors to open when an alarm signal is received from the service water pressure detection system.

Basis: RPP-13033, Chapter 4, Section 4.4.9.4.2, "Performance Criteria 2," and HNF-SD-WM-TSR-006, LCO 3.1.2.

How Requirement is Met: The MPSS is designed to meet this requirement. When the MPSS is required to be operable, functional testing is performed every 182 days to verify that system alarms annunciate when the pressure switch is actuated (TSR SR 3.1.2.2).

3.2 SPECIAL REQUIREMENTS (PIPING)

3.2.1 Radiation and Other Hazards

Safety Function

Requirement: Provide shielding for worker protection (passive).

Basis: HNF-SD-WM-TSR-006, Appendix B, ARH-1437 (AZ), ARH-CD-362 (AW), and SD-340-FDC-001 (AP).

How Requirement is Met: Transfer lines are buried for most of their length, with earth cover or concrete shielding provided based on radiation shielding analysis. Jumpers and manifolds within the transfer structures are shielded for worker protection by the concrete structures and cover blocks or equivalent shielding (cover plates).

3.2.2 As Low As Reasonably Achievable Standards

Requirement: The system shall be designed to protect workers from occupational radiation exposures and to keep personnel exposures ALARA.

Basis: SD-340-FDC-001 (AP) and ARH-CD-549.

How Requirement is Met: Transfer lines are buried and valve manifolds are located with shielded structures to reduce exposure to workers. Also, the monitor and control of these systems are in instrument buildings that are remote from the waste transfer piping. Decontamination, application of fixatives, temporary shielding, and monitoring are performed when access to structures is required for maintenance or modifications.

3.2.3 Nuclear Criticality Safety

During initial operations, a record of the total amount of plutonium transferred to the aging-waste tanks was maintained. The maximum amount of plutonium permitted was restricted based on criticality considerations. (FDM-T-200-00003, *Aging Waste Tank Facilities Description Manual*, Section 4.1.6)

All new equipment modified or installed in the DST WTS shall receive, store, and transfer waste in a manner that prevents criticality in accordance with HNF-IP-0842, Vol. 4, Section 6, "Nuclear Safety"; TFC-ENG-CHEM-P-02, *Criticality Safety Inspections and Assessments*; TFC-ENG-CHEM-P-04, *Criticality Safety Evaluations*; and CPS-T-149-00012, *Criticality Prevention Specification for Tank Farm Operations*.

The new equipment or modifications also shall be designed in accordance with the applicable safety classification for subsystems and components using the process described in TFC-ENG-SB-C-01, *Safety Basis Issuance and Maintenance*; and TFC-ENG-SB-C-06, *Safety Basis Development*.

Tank farms nuclear criticality safety policy is contained in RPP-POL-CRIT-SFT, *Nuclear Criticality Safety Policy*. However, the DST WTS basically is passive and the bulk of nuclear criticality safety requirements apply to inventory control systems. Waste composition limits are imposed through the criticality program. Nuclear Criticality AC 5.7, "Nuclear Criticality Safety," from HNF-SD-WM-TSR-006, also is used.

3.2.4 Industrial Hazards

The functional design criteria for the DST tank farms that are part of the 200 East Area DST WTS, indicate that the tank farms should be designed to 29 CFR 1910, "Occupational Safety and Health Standards." Industrial hazard requirements for any new subsystems and components will be derived from the safety basis for that work, along with the DST system and subsystem specifications already described. The Integrated Environment, Safety and Health Management System requirements also govern tank farm work activities.

3.2.5 Operating Environment and Natural Phenomena

Requirement: The waste transfer primary confinement shall have a design pressure and temperature at least equal to that specified in Table 2.

Table 2. Design Temperatures and Pressures for Transfer Primary Pipe.

Tank Farm	Design pressure (lb/in.2 g)		Design temperature (°F)
	SN	SL	
241-AN	275	400	340
241-AP	400	400	340
241-AW	275	400	340
241-A/AX	230	375	330
241-AY	400	400	200
241-AZ	400	400	200
Facility	**Design pressure (lb/in.^{2} g)**		**Design temperature (°F)**
	LIQW		
204-AR Unloading Facility	120		100

Basis: ARH-1437 (AZ), ARH-CD-362 (AW), ARH-CD-304 (AN), and SD-340-FDC-001 (AP).

How Requirement is Met: These design pressures are identified in Pipe Code M-25 in Construction Specifications B-102-C1 (A and AX), B-120-C7 (AW), B-130-C7 (AN), B-131-C1 (AX, AY, and AZ), B-340-C7 (AP), and M-19 in Construction Specification B-133-C1, *Construction Specification for Waste Unloading Facility Building 204-AR* (AW and AN).

Requirement: The secondary confinement shall have a minimum design pressure of 60 lb/in.^{2} gauge.

Basis: SD-340-FDC-001 (AP).

How Requirement is Met: This design pressure is identified in Pipe Code M-26 or M-26a in Construction Specifications B-102-C1, B-120-C7 (AW), B-130-C7 (AN), B-131-C1 (AX, AY, and AZ), B-340-C7 (AP), and B-133-C1 (AW and AN).

Requirement: All confinement structures and process piping shall be designed and analyzed for a maximum horizontal ground acceleration of 0.25g and a simultaneous maximum vertical ground acceleration of two-thirds of the horizontal.

Basis: ARH-CD-362 (AW), ARH-CD-304 (AN), and SD-340-FDC-001 (AP).

How Requirement is Met: All confinement structures and process piping were analyzed to meet this requirement.

Requirement: Equipment, components, and parts shall be designed for the chemical and radiological environment in their location.

Basis: DOE Order 6430.1A, Section 1300-3.4.2.

How Requirement is Met: Equipment, components, and parts are selected to minimize chemical and radiological degradation. Those items exposed to the waste are selected based on chemical compatibility with the waste, generally a high-pH material. Particularly, nonmetallic parts such as gaskets, valve seat and packing material, and electrical insulation materials also are selected to minimize radiation-induced degradation.

3.2.6 Human Interface Requirements

Operation of waste transfer is remote, and human interface occurs at the instrument stations or where walkdowns of direct-buried lines are required. The human interface requirements are discussed in Section 3.7.2.6.

3.2.7 Specific Commitments

No specific requirements are imposed.

3.3 ENGINEERING DISCIPLINARY REQUIREMENTS

3.3.1 Civil and Structural

Requirement: The system shall be designed to withstand soil loads imposed by a 100,000-lb crane loading in the tank farm area.

Basis: SD-340-FDC-001 (AP).

How Requirement is Met: Transfer lines are buried at least 3 ft below grade and the vehicle movement within the farm is administratively controlled,(Hanford Site Drawings H-2-69183, H-2-70398, H-2-70763, H-2-71986, and H-2-90543) by AC 5.16, "Dome Loading Controls." Allowable loading conditions permissible near and above DSTs are evaluated in RPP-11801, *Analysis of Record Summary for Double-Shell Tanks*, and allowable loadings near and on miscellaneous tank farms structures and tanks are evaluated in RPP-11803, *Analysis of Record Summary for DCRTs, Catch Tanks, and IMUSTs*.

3.3.2 Mechanical and Materials

Requirement: Stainless steel piping shall be American Society of Testing and Materials (ASTM) A 312, *Standard Specification for Seamless and Welded Austenitic Stainless Steel Pipes*, Grade 304L.

Basis: ARH-205 (AY), Chapter 2; and ARH-1437 (AZ).

How Requirement is Met: When the DST transfer piping was installed, only process waste lines from the PUREX Plant and line LIQW-702 from the 204-AR Unloading Facility were stainless steel (Construction Specifications B-120-C7 and B-133-C1).

Requirement: The slurry and supernatant piping, including jumpers, and components shall be designed in accordance with ASME B31.1 or, for more recent construction, ASME B31.3.

Basis: ARH-CD-362 (AW), ARH-CD-304 (AN), SD-340-FDC-001 (AP), and RPP-7984.

How Requirement is Met: The B31.1 code is identified in Construction Specifications B-102-C1, B-120-C7, B-130-C7, B-131-C1, and B-340-C7. The ASME B31.3 code is specified in Hanford Site Drawing H-14-022201, *Caustic Addition Project O&M System P&ID*. There are other projects for which codes and standards and prints are not readily available.

3.3.3 Chemical and Process

Caustic addition system requirements are addressed in Section 3.7.3.3. Protection from corrosion is provided by the Caustic Addition Project document and process. Refer to the chemical composition limits for transfer and storage, AC 5.16, "Corrosion Mitigation Program." Depending on tank chemistry, other chemicals (e.g., sodium nitrate, sodium nitrite, or sodium hydroxide) may be added.

3.3.4 Electrical Power

Requirement: The electrical installation shall comply with the provisions of NFPA 70.

Basis: ARH-CD-362 (AW); ARH-CD-304 (AN); and SD-340-FDC-001 (AP); ARH-205 (AY), Chapter 2;ARH-1437 (AZ), RPP-7984, and DOE Order 6430.1A.

How Requirement is Met: This code is identified in Construction Specifications B-102-C1, B-120-C7, B-130-C7, B-131-C1, and B-340-C7. Refer to the drawings of the electrical system listed in Appendix A. Electrical equipment and installations in the tank farms are accepted by qualified *National Electric Code* inspectors before use.

3.3.5 Instrumentation and Control

See discussions in Section 3.7 for the requirements and bases for instrumentation and control.

3.3.6 Computer Hardware and Software

Current general requirements for computer hardware and software can be found in HNF-IP-0842, Vol. 17, Section 3.5, "Qualification of Software Applications." No specific requirements are imposed in the 200 East Area DST WTS. However, DOE Order 6430.1A requires that the NFPA code be used where applicable.

3.4 TESTING AND MAINTENANCE REQUIREMENTS (PIPING)

3.4.1 Testability

Requirement: Both the primary process piping and its encasement shall be provided with capabilities for periodic pressure test.

Basis: ARH-CD-362 (AW), ARH-CD-304 (AN), and SD-340-FDC-001 (AP).

How Requirement is Met: The encasement piping normally is equipped with hydrotest risers that can be used to periodically test the integrity of the encasement. To test the primary process piping, temporary jumpers may be required to be installed.

3.4.2 Technical Safety Requirement-Required Surveillances

TSR-required surveillances are contained in HNF-SD-WM-TSR-006. The following TSR-required surveillances apply to the 200 East Area DST WTS.

Backflow Prevention Systems (TSR LCO 3.1.2)

Requirement: Perform functional test of the service water pressure detection system.

Frequency: 182 days

Basis: HNF-SD-WM-TSR-006, LCO 3.1.2, SR 3.1.2.1.

How Requirement is Met: Preventive maintenance tests are performed by procedure, which is controlled by the Job Control System.

Requirement: Perform functional test of the MPSS to verify interlock when an alarm signal is received from the service water pressure detection system.

Frequency: 182 days

Basis: HNF-SD-WM-TSR-006, LCO 3.1.2, SR 3.1.2.2.

How Requirement is Met: Preventive maintenance tests are performed by procedure, which is controlled by the Job Control System.

Requirement: Perform functional test of the service water pressure detection system integrity when pressurized.

Frequency: 365 days

Basis: HNF-SD-WM-TSR-006, LCO 3.1.2, SR 3.1.2.3.

How Requirement is Met: Preventive maintenance tests are performed by procedure, which is controlled by the Job Control System.

Requirement: Verify the service water pressure detection system configuration.

Frequency: Before removing an administrative lock from a physically connected waste transfer pump

Basis: HNF-SD-WM-TSR-006, LCO 3.1.2, SR 3.1.2.4.

How Requirement is Met: By physical inspection in accordance with operating procedures.

Requirement: Perform functional test of the backflow preventers.

Frequency: 365 days

Basis: HNF-SD-WM-TSR-006, LCO 3.1.2, SR 3.1.2.5.

How Requirement is Met: Preventive maintenance tests are performed by procedure, which is controlled by the Job Control System. Functional test procedure S-CC-0044 for surveillance of backflow preventers is noted in Appendix B.

Requirement: Independently verify that two safety-significant isolation valves are closed.

Frequency: Before removing an administrative lock from a physically connected waste transfer pump

Basis: HNF-SD-WM-TSR-006, LCO 3.1.2, SR 3.1.2.6.

How Requirement is Met: By physical inspection in accordance with operating procedures.

3.4.3 Non-Technical Safety Requirement Inspections and Testing

Requirement: Lines shall be of all-welded construction with full radiograph inspection of welds required.

Basis: ARH-1437 (AZ).

How Requirement is Met: This requirement is identified in Construction Specifications B-102-C1, B-120-C7, B-130-C7, B-131-C1, B-340-C7, and B-133-C1.

Requirement: Buried waste transfer lines that do not have an encasement (secondary containment shall have a leak test or other integrity assessment at least annually.

Basis: WAC-173-303-640, "Tank Systems," Subsection (4)(i)(C).

How Requirement is Met: Waste transfer lines that are not encased are pressure-tested annually before use to ensure their integrity.

3.4.4 Maintenance

Special maintenance testing required for the interface of the raw water system is the functional test of the pressure switch interlock in the flush pit. The key inspections and maintenance testing for the other systems are listed in Appendix B, Table B-1.

3.5 OTHER REQUIREMENTS

Other requirements are those requirements that may be unique to the Hanford Site, such as nuclear and hazardous waste requirements, availability and reliability requirements, and quality assurance requirements.

3.5.1 Security and Special Nuclear Material Protection

The system shall be designated in accordance with HNF-IP-0842, Vol. 12, *Security*, Section 1.2, "Physical Protection of Property and Facilities."

3.5.2 Special Installation Requirements

Special installation requirements can be applied to the following WTS equipment:

- **Transfer Pumps**. Special consideration would be needed because of the tank waste source term (ALARA) and the ACs found in HNF-SD-WM-TSR-006. Removal of transfer pumps needs to be evaluated based on the specific pump design, installation configuration, service history, and age of the installation.

- **Jumpers**. Most jumpers require remote installation techniques. These techniques and the necessary installation equipment are described in FDM-T-020-00002, Figure 10.

- **Nozzles**. Removing and installing PUREX nozzles on jumpers require special equipment and procedures, which is specified by the Job Control System as needed.

3.5.3 Reliability, Availability, and Preferred Failure Modes

Critical sensing instrumentation will alarm on loss of ability to detect a critical unwanted event (i.e., fail safe). The overall design of the 200 East Area DST WTS contains redundant elements, including redundant physical containment (e.g., secondary confinement pits, hose-in-hose encasements). Also, critical sensing and detecting instrumentation is designed with primary and backup levels, as well as multiple alarm and indication locations (e.g., at a local panel and at a central control location in the Tank Monitor and Control System).

Requirement: The degree of reliability achieved by the design shall allow the facilities to function throughout their intended useful life without undue maintenance or replacement.

Basis: SD-340-FDC-001 (AP).

How Requirement is Met: Programmatic planning and engineering design.

Requirement: Installation of spare pipelines shall be considered.

Basis: DOE Order 6430.1A, Section 1323-5.2.

How Requirement is Met: Except for the AY and AZ Tank Farms, waste from DSTs could be transferred using either the supernatant or slurry transfer lines. However, this might require jumper changes within the transfer-associated structures.

3.5.4 Quality Assurance

Quality assurance requirements documents that apply to operation, maintenance, or modification of the DST WTS include the following:

- RPP-POL-QA, *Quality Assurance Policy*
- RPP-MP-600, *Quality Assurance Program Description*
- RPP-QAPP-008, *River Protection Project Quality Assurance Program Plan.*

3.5.5 Miscellaneous

Catch tanks are limited to 70% full for Tanks 241-A-350 and 241-AZ-151 and 80% full for Tank 241-ER-311 and the 244-A catch tank by OSD-T-151-00015, *Operating Specification for Miscellaneous Facilities.*

3.6 MISCELLANEOUS TRANSFER STRUCTURES

3.6.1 General Requirements

3.6.1.1 System Functional Requirements

The safety functional requirement of preventing leaked waste from jetting to the atmosphere and the environmental protection functional requirement of providing confinement apply to this section. These requirements were identified in Section 3.1.1.2.

3.6.1.2 Subsystems and Major Components

3.6.1.2.1 Process Pits

Requirement: Cover blocks and existing process pits shall have a special protective coating to prevent waste from a spray leak from being absorbed.

Basis: DOE Order 6430.1A and WAC-173-303.

How Requirement is Met: All concrete transfer-associated structures and cover blocks in the WTS have had a special protective coating applied to them (Construction Specifications B-102-C1, B-120-C7, B-130-C7, B-131-C1, and B-340-C7). This coating typically was Amercoat[4] 33. Recently, polyurea coating has been added to some pits. See Appendix A and Design Specifications W314-C-054, *AW Valve Pits Structural Evaluation*;

[4] Amercoat is a trademark of the Ameron International Corporation.

W314-C-092, *AW Pits Lifting Bail Investigation*; W314-P-006, *Inside Pit & Buried Pipeline Heat Loss Calculation*; W314-P064, *Pipe Jumper Stress Analysis 241-AW-A&B Valve Pits*; W314-P-066, *Shielding Analysis 241-AW-A&B Valve Pits*; and W314-P-070, *Lifting Bail Structural Analysis*.

3.6.1.2.2 Cover Blocks and Cover Plates

Requirement: Cover blocks shall be provided for all transfer-associated structures that can be physically connected to an active waste transfer route.

Basis: SD-340-FDC-001 (AP).

How Requirement is Met: All of the process pits have cover blocks or cover plates. The COBs are equipped with lids of various designs, as described in Chapter 4.

Requirement: Design and installation of new tank systems or components, including cover blocks, shall be modified with drip shields or other mechanical means to prevent precipitation from entering the pits.

Basis: WAC 173-303-640(4)(e)(i)(B).

How Requirement is Met: Most new cover blocks (AW, AN, and AP) have been modified with drip shields or other means to prevent precipitation from entering the pits, as shown in Hanford Site Drawing H-2-90454, Sheet 1, *Structural Typical Details*, Detail 5, "Moisture Guard," to meet this requirement.

Requirement: Design and installation of cover plates or temporary pit cover installations to replace cover blocks shall meet the process, safety, and environmental requirements for the operating conditions applicable while the cover plates or temporary pit cover installations are installed.

Basis: Various safety management systems are used to implement those requirements applicable for the particular application as a design practice.

How Requirement is Met: Pit cover plates that are in service during all operating conditions are designed to provide functionally equivalent accident mitigation, shielding, confinement , and ALARA design to the cover plates they replace. Temporary pit cover installations (at times in conjunction with other temporary installations) are designed to provide accident mitigation, shielding, confinement, and ALARA design for the conditions of service during the period that the temporary installations are in place.

3.6.1.3 Boundaries and Interfaces

The boundaries and interfaces for the transfer structures are the same as for the process piping. Section 3.1.3 contains a detailed description of the requirements associated with these boundaries and interfaces.

3.6.1.4 Codes, Standards, and Regulations

The codes, standards, and regulations are discussed in Section 3.1.4. Detailed discussions on how the design of various components meets the requirements of codes, standards, and regulations are contained in the appropriate paragraphs in Section 3.6.

3.6.1.5 Operability

No operability requirements are associated with the transfer structures.

3.6.2 Specific Requirements

3.6.2.1 Radiation and Other Hazards

Requirement: Primary processing pits shall be designed to protect personnel to ALARA levels, but not to exceed 1 mR/hr based on the process solution concentration of 6 Ci of ^{137}Cs/gal. Radiation levels in the AP Tank Farm were required to not exceed 0.5 mR/hr.

Basis: ARH-CD-362 (AW), ARH-CD-304 (AN), and SD-340-FDC-001 (AP).

How Requirement is Met: The DST process pits were built based on the results of shielding analyses that show that these radiation levels would be met. Other structures and equipment were designed using Design Specifications W314-C-054, W314-C-092, W314-P-000, W314-P-064, W314-P-066, and W314-P-070 were based on design reviews, ALARA principals, and radiological analyses to make cost-effective ALARA determinations. These determinations showed that radiation levels were potentially above 1mR/hr. See RPP-8656, *Design Review Report 241-A-B Valve Pit Manifold Jumper Assembly (H-14-104770) Safety-Significant Valves*; RPP-5346, *Waste Feed Delivery Transfer System Analysis;* and RPP-8549, *Radiological Design Review Screening 241-A-B Valve Pit Steel Cover Plate.*

Requirement: Cover blocks and cover plates shall prevent radiation streaming.

Basis: ARH-CD-304 (AN), ARH-CD-549, and ARH-CD-362 (AW).

How Requirement is Met: The cover block design mitigates radiation streaming by creating a tortuous path through cracks and joints, using closures for open penetrations, or creating a tortuous path from radiation sources by location and configuration of penetrations.

3.6.2.2 As Low As Reasonably Achievable Standards

ALARA standards are covered in Section 3.2.2.

3.6.2.3 Nuclear Criticality Safety

Nuclear criticality safety is covered in Section 3.2.3.

3.6.2.4 Industrial Hazards

No specific requirements are imposed; however, design decisions were made using chemical ALARA and Integrated Environment, Safety and Health Management System programs.

3.6.2.5 Operating Environment and Natural Phenomena

The governing document for natural phenomena design considerations is covered in HNF-IP-0842, Vol. 4, Section 3.14, "Engineering Design and Evaluation." This document supersedes Hanford plant standards standard design criteria document SDC-4.1, *Design Load*, and GC-LOAD-01, *Design Load for Facilities*. Previously, general design criteria for DOE facilities were included in DOE Order 6430.1A. Current DOE requirements for natural phenomena hazard (NPH) mitigation for DOE sites and facilities are listed in DOE Order 5480.28 and DOE-STD-1020-94. Design and evaluation requirements based on performance categories life-cycle stage, and particular characteristics of a facility are contained in DOE Order 5480.28 and DOE-STD-1020-94. Section 3.2.5 contains additional operating environment and natural phenomena requirements.

Operating Environment

Requirement: Equipment installed in the tanks shall be able to withstand, and perform within, the radiological environment operating area.

Basis: Best management practices and HNF-2004, *Estimated Dose to In-Plant Equipment: Phase 1 Waste Feed Delivery*.

How Requirement is Met: Equipment installed in the tanks is designed to be compatible with its operating environment. The design is documented by design reviews.

Natural Phenomena

Requirement: The system shall be designed for the natural environmental conditions where it will be used.

Basis: HNF-SD-GN-ER-501, *Natural Phenomena Hazards, Hanford Site, Washington*; HNF-IP-0842, Vol. 4, Section 3.14, "Engineering Design and Evaluation."

How Requirement is Met: The system design and applicable procedures conform to the requirements of the listed design-basis documents for the Hanford Site.

3.6.2.6 Human Interface Requirements

Section 3.7.2.6 covers the human interface design requirements.

3.6.2.7 Specific Commitments

No specific requirements are imposed.

3.6.3 Engineering Disciplinary Requirements

3.6.3.1 Civil and Structural

Requirement: The concrete shall meet ACI design code specifications.

Basis: ARH-CD-362 (AW); ARH-CD-304 (AN); and SD-340-FDC-001 (AP); ARH-205 (AY), Section 2; and ARH-1437 (AZ).

How Requirement is Met: This criterion is implemented in Section 3300 of B-102-C1, B-120-C7, B-130-C7, B-131-C1, and B-340-C7.

Requirement: The design and installation of new tank components including cover block or cover plate design for pits with valve handles in place shall provide resistance to snow and rain water intrusion.

Basis: SD-340-FDC-001 (AP) and WAC 173-303-640(4)(e)(i)(B).

How Requirement is Met: Most new cover blocks are equipped with gaskets to provide a weather seal. Such cover blocks can be found in the AN, AP, and AW Tank Farms. Some of the cover blocks are sealed with aluminum duct tape to mitigate the intrusion of foreign elements into the crack between the blocks and the pit sidewalls.

3.6.3.2 Mechanical and Materials

No specific requirements are imposed.

3.6.3.3 Chemical and Process

No additional requirements for chemical and process apply.

3.6.3.4 Electrical Power

No additional requirements for electrical power apply.

3.6.3.5 Instrumentation and Control

No additional requirements and bases for instrumentation and control apply.

3.6.3.6 Computer Hardware and Software

No additional computer hardware and software requirements apply.

3.6.3.7 Fire Protection

No additional fire protection requirements apply.

3.6.4 Testing And Maintenance Requirements

3.6.4.1 Testability

No specific requirements are imposed.

3.6.4.2 Technical Safety Requirement-Required Surveillances

No specific requirements are imposed.

3.6.4.3 Non-Technical Safety Requirement Inspections and Testing

See Appendix B, Table B-1, for inspection and testing procedures.

3.6.4.4 Maintenance

See Appendix B, Table B-1, for maintenance procedures.

3.6.5 Other Requirements

3.6.5.1 Security and Special Nuclear Material Protection

No additional security and special nuclear material protection requirements apply.

3.6.5.2 Special Installation Requirements

No additional special installation requirements apply.

3.6.5.3 Reliability, Availability, and Preferred Failure Modes

No additional requirements for reliability, availability, and preferred failure modes apply.

3.6.5.4 Quality Assurance

No additional quality assurance requirements apply.

3.6.5.5 Miscellaneous

Requirement: Cover blocks shall be marked to indicate their weight.

Basis: DOE/RL-92-36, *Hanford Site Hoisting and Rigging Manual*, and HNF-IP-0842, Volume 4, Rev. 0b, Section 4.39, "Structural Integrity Verification of Permanent Lifting attachments."

How Requirement is Met: Most new or refurbished cover blocks have been painted to indicate their weight. This requirement might not be reflected on older cover blocks. By procedure this is to be done the first time the cover block is lifted.

3.7 INSTRUMENTATION AND CONTROLS/ MASTER PUMP SHUTDOWN SYSTEM

3.7.1 General Requirements

3.7.1.1 System Functional Requirements

Safety Function

Requirement: The Transfer Leak Detection System shall detect the accumulation of waste leaked into waste transfer-associated structures before the waste accumulates to 20% of the structure volume.

Basis: RPP-13033, Chapter 4, Section 4.4.7, "Transfer Leak Detection Systems."

How Requirement is Met: Permanently installed transfer leak detectors are installed as close to the structure floor as possible and typically actuate before accumulating waste reaches 5% of the structure volume. RPP-13909, *Transfer Leak Detection Alarm Activation Percent Volume Level Calculation*, identifies structures with transfer leak detection maintained to meet this requirement and documents the percent volume level at which transfer leak detection alarms for each structure. This document supports configuration control for permanent transfer leak detector placement and shall be revised to accurately describe new installations or modifications to existing installations. Periodic testing is not required to demonstrate detector placement. When transfer leak detection is installed in an above-ground structure (such as a portable pump pit), the structure is verified (after installation or related maintenance) to not leak before accumulating waste actuates the leak detector.

Requirement: The transfer leak detection system shall annunciate transfer leak detection alarms to initiate operator response.

Basis: RPP-13033, Chapter 4, Section 4.4.7.

How Requirement is Met: Transfer leak detection systems are designed and installed to actuate alarms at local and/or remote stations. To satisfy this annunciation requirement, only one of the alarm stations must be functional. When transfer leak detection is required to be operable, periodic testing is performed to verify that the transfer leak detection system alarms annunciate at a location that can be monitored in accordance with AC 5.11 (HNF-SD-WM-TSR-006).

Requirement: The Transfer leak detection system shall actuate automatic shutdown of physically connected pumps via the MPSS on detection of a waste transfer leak. (If leak detection annunciation is monitored in accordance with AC 5.11 during the transfer to ensure pump shutdown within 30 min, automatic pump shutdown function is not required.)

Basis: RPP-13033, Chapter 4, Section 4.4.7.

How Requirement is Met: Transfer leak detection systems are designed and installed to transmit an alarm signal to the MPSS, which will actuate an interlock to shut down transfer pumps under any of the following conditions:

- Accumulating waste actuates the detector circuit
- Power is lost to the leak detector
- The signal from the detector local alarm station is lost.

When transfer leak detection is required to be operable, and automatic pump shutdown is relied on, periodic testing is performed to verify that these transfer leak detection system alarm conditions cause pump contactors to open.

Requirement: The MPSS shall shut down physically connected pumps when an alarm signal is received from the transfer leak detection system.

Basis: RPP-13033, Chapter 4, Section 4.4.9, "Master Pump Shutdown System."

How Requirement is Met: The MPSS is designed and installed to shut down waste transfer pumps by opening the pump contactor when an alarm signal is received from the transfer leak detection system. When the MPSS is required to be operable, periodic testing is performed to verify that an alarm signal received from the transfer leak detection system causes associated waste transfer pump contactors to open.

3.7.1.2 Subsystems and Major Components

Major components of the instrumentation and controls system include leak detection equipment, radiation detection equipment, and their interconnections to the existing MPSS. These components have the following requirements.

Requirement: All instrumentation shall read and/or alarm in the designated tank farm instrument building or at a location that can be manned when required for waste transfers.

Basis: ARH-CD-362 (AW), ARH-CD-304 (AN), and SD-340-FDC-001 (AP).

How Requirement is Met: This is shown in the system piping and instrumentation drawings: Hanford Site Drawings H-14-020801, *Waste Transfer System (Wt) O&M System P&ID*; H-14-020802, *Waste Transfer System (WT) O&M System P&ID*; H-14-020803, *Waste Transfer System (WT) O&M System P&ID*; H-14-020806; and H-14-020807, *Waste Transfer System WT O&M System P&ID*). Not all instrumentation reads out or alarms in the instrument building. Some instruments are read locally. However, all waste transfer-associated instrument displays and alarms meet the TSR requirements. Transfer leak detectors and service water pressure switches either interlock the transfer pump or alarm. There is no requirement to alarm in the instrument building and the transfer procedures require that operable alarm locations be determined.

Requirement: Selected leak and radiation detection instrumentation shall interlock with the tank farm pump and evaporator pump controls, and shall alarm at the 242-A Evaporator Building control room.

Basis: ARH-CD-362 (AW), ARH-CD-304 (AN), and SD-340-FDC-001 (AP).

How Requirement is Met: Transfer leak detectors and service water pressure switches are required to either interlock the transfer pump or alarm. The status of the interlock and the alarm is determined before waste transfers as specified in the transfer procedures. The alarm need not annunciate in the 242-A Evaporator Building control room to meet the TSR

waster transfer requirements. See the piping and instrumentation diagrams listed in Table A-1 for a status of the instrumentation alarm configurations.

Requirement: Leak detection instrumentation shall be designed to fail safe in the event of an electrical outage, if its failure is not otherwise obvious.

Basis: ARH-CD-362 (AW), ARH-CD-304 (AN), and SD-340-FDC-001 (AP).

How Requirement is Met: This requirement is met by design and verified by design reviews and periodic functional tests.

Requirement: The pit leak detector shall detect the failure of either the primary containment structure or the presence of any accumulated liquid in the secondary containment within 24 hours.

Basis: WAC 173-303-640.

How Requirement is Met: All transfer-associated structures are equipped with leak detectors near the structures drain. These leak detectors are less than 2 in. above the low point of the structure.

3.7.1.3 Boundaries and Interfaces

No additional electrical distribution system requirements apply.

3.7.1.4 Codes, Standards, and Regulations

Section 3.1.4 lists the codes, standards, and regulations that affect the 200 East Area DST WTS.

3.7.1.5 Operability

System operability is based on the facility authorization basis, including RPP-13033, HNF-SD-WM-TSR-006, and other documents. The 200 East Area DST WTS has operability requirements specified in these authorization basis documents as follows.

3.7.1.5.1 TSR LCO 3.1.1, "Transfer Leak Detection Systems"

Permanently installed transfer leak detection systems (i.e., conductivity probes or weight factor instrumentation) shall be considered operable if the following requirements are demonstrated to have been met.

Requirement: Leak detection shall be positioned in waste transfer-associated structures to detect waste before it accumulates to 20% of the structure volume.

Basis: RPP-13033, Chapter 4, Section 4.4.7.4.1, "Performance Criteria 1," and HNF-SD-WM-TSR-006, LCO 3.1.1.

How Requirement is Met: Permanently installed leak detectors are installed to meet this requirement. The detector placement is protected by configuration management programs. No periodic testing is required to verify placement of permanently installed detectors. If transfer leak detection is required to be operable in an above-ground structure, such as a

portable pump pit, the structure is tested after installation or related maintenance to verify that accumulating waste will not leak before the detector is actuated.

Requirement: The transfer leak detection system alarm shall annunciate at a location that can be monitored in accordance with AC 5.11 (HNF-SD-WM-TSR-006).

Basis: RPP-13033, Chapter 4, Section 4.4.7.4.2, "Performance Criteria 2," and HNF-SD-WM-TSR-006, LCO 3.1.1.

How Requirement is Met: Permanently installed leak detection is installed to meet this requirement. When the transfer leak detection system is required to be operable, testing is performed every 365 days to verify that alarm conditions (leak detection, loss of power to the detector, and loss of signal from the local alarm station to the alarm station to be monitored) result in alarm annunciation at at least one location where that alarm may be monitored (TSR SR 3.1.1.3). Additionally, if the system alarm is monitored at a remote alarm station, the remote alarm indicator lamps are tested every 121 days to verify that they illuminate when energized (TSR SR 3.1.1.1)

Requirement: The transfer leak detection system alarm signal shall be transmitted to the MPSS (not required if alarm annunciation is monitored in accordance with TSR AC 5.11 during the transfer to ensure pump shutdown within 30 min).

Basis: RPP-13033, Chapter 4, Section 4.4.7.4.3, "Performance Criteria 3," and HNF-SD-WM-TSR-006, LCO 3.1.1

How Requirement is Met: Permanently installed leak detection is installed to meet this requirement. When the transfer leak detection system is required to be operable, periodic testing is performed every 365 days to verify that alarm conditions (leak detection, loss of power to the detector, and loss of signal from the local alarm station to the MPSS) result in an alarm signal transmitted to the MPSS (TSR SR 3.1.1.3).

The MPSS shall be considered to be operable if the following requirements are demonstrated to have been met.

Requirement: The MPSS shall cause associated waste transfer pump contactors to open when an alarm signal is received from the transfer leak detection system.

Basis: RPP-13033, Chapter 4, Section 4.4.9.4.1, "Performance Criteria 1," and HNF-SD-WM-TSR-006, LCO 3.1.1.

How Requirement is Met: The MPSS is designed to meet this requirement. When the MPSS is required to be operable, functional testing is performed every 182 days to verify that system alarms annunciate when the pressure switch is actuated (TSR SR 3.1.1.2).

Temporary Transfer Leak Detection Systems (i.e., zip cords) shall be considered to be operable if the following requirements are demonstrated to have been met.

Requirement: The zip cord meter shall display the impedance (or resistance) sensed by the zip cord probe.

Basis: RPP-13033, Chapter 4, Section 4.4.7.4.2, "Performance Criteria 2," and HNF-SD-WM-TSR-006, LCO 3.1.1.

How Requirement is Met: When a zip cord is required to be operable, an initial functional test is performed on the zip cord and meter before positioning the zip cord in the structure. This test verifies that the impedance meter deflects (or indicates 'closed circuit') when the zip cord probes are shorted together (TSR SR 3.1.1.4). It is not required that the meter be calibrated. However, the meter must be able to measure and display 'closed circuit' (probe submerged in waste) and 'open circuit' (probe in dry air) conditions. The meter display should be clear and easy to read such that 'closed circuit' and 'open circuit' conditions are clear to the operator.

Requirement: The zip cord probe shall be positioned in the transfer-associated structure to detect waste before it accumulates to 20% of the structure volume.

Basis: RPP-13033, Chapter 4, Section 4.4.7.4.1, "Performance Criteria 1," and HNF-SD-WM-TSR-006, LCO 3.1.1.

How Requirement is Met: When a zip cord is required to be operable, the probe placement may be verified by indirect methods such as visual observation or measuring the length of the zip cord and lowering it into a structure of known floor depth (TSR SR 3.1.14).

3.7.2 Special Requirements

3.7.2.1 Radiation and Other Hazards

Requirement: Equipment and systems shall be capable of in-place preventive maintenance with minimal exposure of workers.

Basis: DOE Order 6430.1A and ALARA principles.

How Requirement is Met: The monitoring and control components are located remote from radiation and contamination sources to facilitate maintenance.

3.7.2.2 As Low As Reasonably Achievable Standards

No additional ALARA requirements apply.

3.7.2.3 Nuclear Criticality Safety

No additional nuclear criticality safety requirements apply.

3.7.2.4 Industrial Hazards

No additional industrial hazards are present.

3.7.2.5 Operating Environment and Natural Phenomena

Requirement: All instrument electrical equipment shall be designed to operate under adverse open-field conditions.

Basis: ARH-CD-362 (AW), SD-340-FDC-001 (AP), and DOE Order 6430.1A. The requirement also is identified in RPP-7984.

How Requirement is Met: This criterion is identified in Construction Specifications B-102-C1, B-120-C7, B-130-C7, B-131-C1, B-340-C7.

3.7.2.6 Human Interface Requirements

Tank farms system design shall comply with DOE Order 6430.1A, Section 1300-12, "Human Factors Engineering."

The system shall be operated, maintained, and managed by qualified personnel trained to the levels described in TFC-BSM-TQ-STD-02, *Operations Management Qualification Requirements*, HNF-IP-0842, Vol. 3, *Training*, Section 10.5, "Operator Qualification Program Description."

3.7.2.7 Specific Commitments

No specific requirements are imposed.

3.7.3 Engineering Disciplinary Requirements

3.7.3.1 Civil and Structural

No specific requirements are imposed.

3.7.3.2 Mechanical and Materials

No specific requirements are imposed.

3.7.3.3 Chemical and Process

The SDDs for chemical addition are RPP-8195, *Tank 241-AN-102 Caustic Addition Project System Design Description*; RPP-9438, *System Design Description for Waste Tank Addition Project by Tanker Truck*; and RPP-9771, *Tank 241-AN-107 Caustic Addition Project System Design Description*. They describe special chemical-related requirements and background for adding chemicals to waste tanks.

3.7.3.4 Electrical Power

Requirement: Power, control, and instrumentation cables to motor control centers and to individual motors, lights, panels, etc., shall be routed below grade in raceways or conduits wherever practicable to avoid direct-buried cable runs.

Basis: SD-340-FDC-001 (AP) and ARH-CD-304 (AN).

How Requirement is Met: Design reviews and field walkdowns confirm this requirement is implemented for the newer DST tank farms. This requirement was not in place when older tanks farms, such as AY and AZ, were constructed; those tank farms still use some direct-buried cables.

Requirement: The location of above-grade instrumentation and electrical apparatuses shall accommodate routine access to the process pits using a crane and 60-ft trailer and with space provided adjacent to the pits so that the cover blocks can be stacked without moving the crane.

Basis: SD-340-FDC-001 (AP).

How Requirement is Met: Design reviews and field walkdowns confirm that this requirement is implemented.

Requirement: Leak detection devices for transfer-associated structures shall comply with NFPA 70.

Basis: ARH-CD-362 (AW), ARH-CD-304 (AN), and SD-340-FDC-001 (AP), ARH-205 (AY), Section 2, ARH-1437 (AZ), DOE Order 6430.1A, and RPP-9771.

How Requirement is Met: This criterion is identified in Construction Specifications B-102-C1, B-120-C7, B-130-C7, B-131-C1, and B-340-C7. Compliance with NFPA 70 is a Sitewide requirement. Leak detectors have been designed, installed, and inspected to the requirements of NFPA 70.

3.7.3.5 Instrumentation and Control

No additional instrumentation and control requirements apply.

3.7.3.6 Computer Hardware and Software

No additional computer hardware and software requirements apply.

3.7.3.7 Fire Protection

No additional fire protection requirements apply.

3.7.4 Testing And Maintenance Requirements

3.7.4.1 Testability

Requirement: Equipment, instrumentation, detectors, and systems located in pits shall have remote test and interrogation capability to determine performance and condition.

Basis: SD-340-FDC-001 (AP), Section 9.

How Requirement is Met: Design reviews and test procedures listed in Appendix B, Table B-1.

Requirement: Leak detectors shall be capable of being functionally tested.

Basis: SD-340-FDC-001 (AP).

How Requirement is Met: All transfer-associated leak detectors can be functionally tested from outside the pits. See test procedures listed in Appendix B. The specific functional

test for the AP Tank Farm is TF-FT-279-006, *Perform Functional Test for AP Farm Transfer Leak Detectors*.

3.7.4.2 Technical Safety Requirement-Required Surveillances

TSR-required surveillances are contained in HNF-SD-WM-TSR-006. Typically, testing is required only when the systems are required to be operable. Refer to the TSR for specific applicability.

Transfer Leak Detection System (TSR LCO 3.1.1)

Requirement: Verify that the remote alarm indicator lamps illuminate when energized.

Frequency: 121 days

Basis: HNF-SD-WM-TSR-006, LCO 3.1.1, SR 3.1.1.1.

How Requirement is Met: Preventive maintenance tests are performed by procedure, which is controlled by the Job Control System.

Requirement: Perform functional test of the MPSS to verify interlock when an alarm signal is received from the transfer leak detection system.

Frequency: 182 days

Basis: HNF-SD-WM-TSR-006, LCO 3.1.1, SR 3.1.1.2.

How Requirement is Met: Preventive maintenance tests are performed by procedure, which is controlled by the Job Control System.

Requirement: Perform functional test of the permanently installed transfer leak detection systems.

Frequency: 365 days

Basis: HNF-SD-WM-TSR-006, LCO 3.1.1, SR 3.1.1.3.

How Requirement is Met: Preventive maintenance tests are performed by procedure, which is controlled by the Job Control System.

Requirement: Perform functional test of the zip cord and meter.

Frequency: Before removing an administrative lock from a physically connected waste transfer pump.

Basis: HNF-SD-WM-TSR-006, LCO 3.1.1, SR 3.1.1.4.

How Requirement is Met: Preventive maintenance tests are performed by procedure, which is controlled by the Job Control System.

3.7.4.3 Non-Technical Safety Requirement Inspections and Testing

No specific requirements are imposed.

3.7.4.4 Maintenance

Requirement: Above-ground equipment and systems shall be capable of in-place preventive maintenance, repair, and calibration.

Basis: SD-340-FDC-001, Section 9 (AP).

How Requirement is Met: The electrical distribution switchboards and panel boards are located remote from radiation and contamination sources to facilitate maintenance. Additional above-ground equipment is located to allow in-place maintenance.

Requirement: The equipment and instrumentation detectors and systems located in pits, annuli, or tanks shall have remote test and interrogation capability to determine performance and condition. Equipment and instrumentation must be capable of being remotely removed and replaced. The requirement refers primarily to radiation areas.

Basis: SD-340-FDC-001 (AP), Section 9.

How Requirement is Met: This requirement is met in all tank farms by the use of remote jumper assemblies and easily replaceable instrumentation. See Appendix A.

3.7.5 Other Requirements

3.7.5.1 Security and Special Nuclear Material Protection

No specific requirements are imposed.

3.7.5.2 Special Installation Requirements

No specific requirements are imposed.

3.7.5.3 Reliability, Availability, and Preferred Failure Modes

No specific requirements are imposed.

3.7.5.4 Quality Assurance

No additional quality assurance requirements apply.

3.7.5.5 Miscellaneous

No specific requirements are imposed.

4.0 SYSTEM DESCRIPTION

This chapter provides a comprehensive description of the 200 East Area DST WTS. It identifies the subsystems and components of the 200 East Area DST WTS; describes their layout and interconnection; explains the system flow paths; identifies the indicators, controls, and alarms within the system; and explains how the system operates. This system description emphasizes the design features that meet the requirements identified in Chapter 3.

4.1 CONFIGURATION

4.1.1 Description of System, Subsystems, and Major Components

Figure 2 identifies the subsystems and their interconnections for a typical DST tank farm. These are the same subsystems and interfacing systems shown in Figure 1, but Figure 2 provides more details on interconnections and components. This diagram also shows the support systems (electrical distribution, monitoring and control, instruments) and the boundaries between them and the subsystems. It also identifies the major components that are required to fulfill the system functions, such as the transfer pumps and leak detectors. Appendix A lists the major piping and instrumentation diagrams and relevant diagrams for the subsystems and interfacing systems. Some of these drawings also are cited later in this chapter. Section 4.1.3 describes the physical layout and arrangements of the subsystems and their interfacing systems and major components. Section 4.1.4 contains a walkdown on the flow paths of various subsystems and interfacing systems.

4.1.2 Boundaries and Interfaces

Waste Storage Tank System

The interfaces between the Waste Storage Tank System and the WTS are the central pump pits. The WTS transfer system includes the pumps, jumpers, valves, and transfer-related instrumentation. The Waste Storage Tank System includes the pits, cover blocks, and risers. Flush pit connections are located in the AW Tank Farm at the flush pit for supply to the 242-A Evaporator feed pit, AW-02E, and in the AP Tank Farm at the flush pit for supply to the AP valve pit. The AP Tank Farm, AW Tank Farm, and the 242 A Evaporator currently are the only available sources of flush water for the 200 East Area DST WTS.

Flush pits in other tank farms are approximated on Figure 2. All are disconnected at this time. See prints listed in Appendix A for exact routing and configuration.

Figure 2. Typical DST Tank Farm System Diagram.

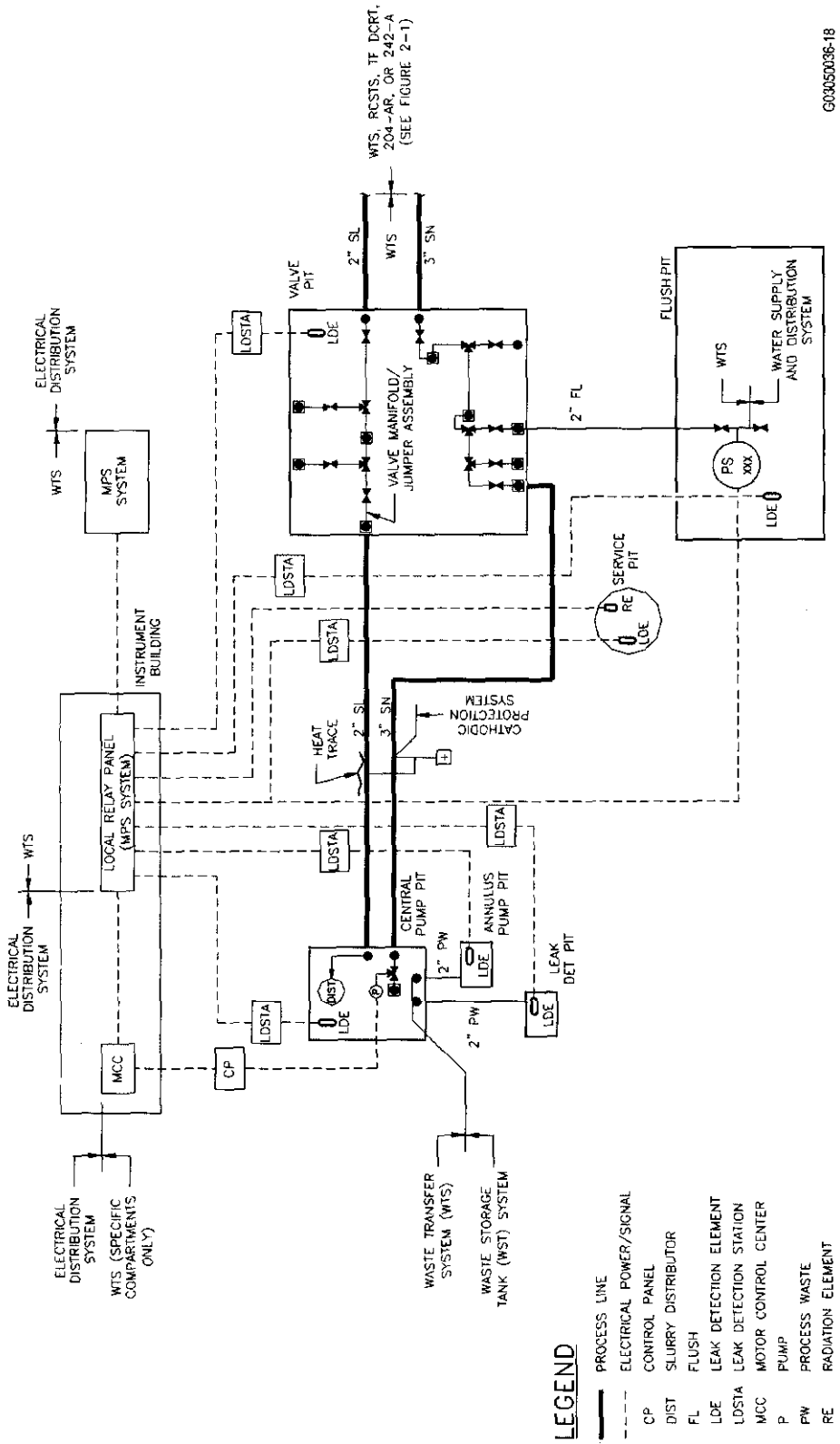

Water Supply and Distribution System

The water supply and distribution system provides the raw water used to flush the transfer system after transfers are completed. The water supply system and the WTS interface at the waste transfer flush pits. Generally, a 2-in. PUREX nozzle is provided in each valve pit. The WTS includes the jumper that connects to the nozzle. Table 3 lists these interfaces.

Table 3. Flush Pit Interfaces.

Valve pit	Nozzle number	Line number
241-AP	25 (2")	2" FL
241-AW-02E	C	NA

Cathodic Protection System

The cathodic protection system protects the transfer line encasements from external galvanic corrosion resulting from bacterial and chemical activity in the soil and from galvanic corrosion caused by the interface of dissimilar metals. The cathodic protection system interfaces with the WTS at the encasements of the transfer lines. The cathodic protection system includes the rectifiers, wiring, and connection points on the encasement. The WTS system includes the encasements.

Double-Contained Receiver Tanks

The 200 East Area DST WTS provides transfer lines from the 244-A DCRT pump pit to any of the 200 East Area DSTs. The interfaces between the 200 East Area DST WTS and the 244-A DCRT occurs at the DCRT pump pit wall. Lines SN-215 and SN-216 connect the 244-A DCRT pump pit to the 200 East Area DST WTS. Lines SN-232 and SN-234 connect the portion of the 200 East Area DST WTS that transfers waste from the SST WTS at the 244-BX DCRT. The four lines are part of the 200 East Area DST WTS. Currently, the nozzles in the DCRT pump pit and connecting jumpers are part of the tank farm DCRT system. Transfer leak detection for the 244-A DCRT is discussed in RPP-15136, *System Design Description for the Replacement Cross-Site Transfer System between 200 West and 200 East Tank Farms.* Currently, 244-A is not used as a DCRT; the DCRT pump pit is used to provide jumpers to connect the RCSTS and the portion of the 200 East Area DST WTS that transfers waste from the SST WTS at the 244-BX DCRT to 200 East Area DST WTS lines SN-215 and SN-216 for transfers to any of the 200 East Area DSTs. The 244-A DCRT is operated as a catch tank.

The 200 East Area DST WTS provides transfer lines from the 244-BX DCRT to any of the 200 East Area DSTs. The interface between the 200 East Area DST WTS and the 244-BX DCRT occurs at the DCRT pump pit wall. Line SN-9808 connect the 244-BX DCRT via interconnecting transfer lines to the 244-A DCRT pump pit for interconnection to any of the 200 East Area DSTs via lines SN-215 and SN-216.

In the CR Vault, Tank 003 is not operable at this time. The AR vault transfer system also is not operable at this time.

Replacement Cross-Site Transfer System

The 200 East Area DST WTS and the RCSTS do not interface directly. Instead, the 200 East Area DST WTS connects to the 244-A DCRT, which in turn connects to the RCSTS. The RCSTS SDD, RPP-15136, describes the interface between the 244-A DCRT and the RCSTS.

204-AR Unloading Facility

Transfer line LIQW-702 connects the 204-AR Unloading Facility to Valve Pit 241-A-A and the 200 East Area DST WTS. The two systems interface at the wall of the 204-AR Unloading Facility where the line leaves the building. The transfer line LIQW-702 is part of the 200 East Area DST WTS.

Because an SDD was not written for the 204-AR Unloading Facility, this WTS SDD will include the SS backflow preventors and leak detector in the 204-AR Unloading Facility. The SS backflow preventers BFP-3 and BFP -4 are located in the 204-AR unloading room. The BFP-3 separates the waste transfer system from the raw water system. The BFP-4 separates the chemical addition system and the raw water system from the WTS. Hanford Site Drawing H-2-70703, sheets 1-3, *Engineering Flow Diagrams*, show the configuration of the transfer system in the 204-AR Unloading Facility.

242-A Evaporator

Tank 241-AW-102 is the feed tank for the 242-A Evaporator. Any waste designated for concentration is pumped to Tank 241-AW-102 for transport to the 242-A Evaporator. Transfer lines SN-269 provides the transfer route from the feed tank pump to the Evaporator. The two systems interface at the wall of the 242-A Evaporator where the lines enter the building. The 242-A Evaporator interface is described in HNF-3395, Section 4.2. The 242-A Evaporator is in the process of contract transition. This requirement, basis, and how the requirement is met will be revised to reflect the redefined basis when interface revision is completed. The two transfer lines are part of the 200 East Area DST WTS. In addition to the transfer lines, drain lines DR-334, DR-335, and DR-338 may be used to return waste via the 200 East Area DST WTS to the DSTs.

SST Waste Transfer System

The SST Waste Transfer System interfaces with the 200 East Area DST WTS at the 241-A-A, 241-A-B, 241-AX-A, and 241-AX-B Valve Pits and at the 244-BX DCRT. The interface at the 241-A-A Valve Pit is 2-in. nozzle L5 on transfer line SL-107. The interface at the 241-A-B Valve Pit has Safety-Significant valves to isolate transfers from the SST Stabilization Project; currently, valve AVPB-WT-V-306 does not meet the isolation valve criteria. The interface at the 241-AX-A Valve Pit is 2-in. nozzle L9 on transfer line SL-108. The interface at the 244-BX DCRT is 3 in. nozzle N on transfer line SN-9808.

Transfer lines SL-100 and SN-200 can provide connection from the SST Waste Transfer System in the C Tank Farm at pits 241-C-06A and 241-C-06C, respectively, to the 200 East Area DST WTS in the AY Tank Farm.

In addition, temporary connection from the SST Waste Transfer System to the 200 East Area DST WTS can be made by hose-in-hose transfer lines at numerous locations should SST waste retrieval needs warrant.

Electrical Distribution System

The electrical distribution system is a support subsystem of the 200 East Area DST WTS because it provides electrical power to meet the needs of other systems. Existing Electrical Utilities power lines in the vicinity provide electrical power to operate the tank farm transfer pumps and the electrical distribution system. Transformers supply electrical power to the tank farm 480-V (ac) switchboard or motor control center that distributes power to the transfer pumps. Locally, 120-V (ac) distribution panels (fed by transformers) provide power to other electrical loads, such as control power for the leak detectors and power for heat tracing. All electrical components, including the motor control centers and the 120-V (ac) distribution panels are part of the electrical distribution system. The interface point of the electrical system and the WTS is at the termination point of the loads these components feed.

4.1.3 Physical Location and Layout

4.1.3.1 Process Piping

Process piping includes transfer lines, pumps, and jumpers.

4.1.3.1.1 Transfer Lines

The design of transfer lines varies. However, all transfer lines have several common features. All are sloped so any liquid in the encasement will flow to a leak detector. Except for the HIHTL, the primary pipe is made of steel. Most employ a double-encased design.

Most of the transfer lines are provided with a cathodic protection system. Galvanic corrosion attacks the outside of buried steel and could shorten the design life of the transfer encasements. To minimize and control corrosion, most encasement is protected with an impressed-current cathodic protection system.

Some transfer lines are provided with heat tracing capabilities. The heat tracing system was intended to prevent liquid waste from gelling, crystallizing, or precipitating in process lines. Unless determined to be necessary by analysis, the transfer systems are operated without the heat tracing system operating.

The following descriptions are representative of specific pit jumper configurations in the various valve pits. Specific configuration and waste transfer routings may vary from the routings described during conduct of specific transfers by valve operation and/or jumper changes.

AN Tank Farm

All 241-AN process pipelines are constructed of schedule 40, carbon steel pipe and are encased in schedule 40, carbon steel secondary pipes. The pipe encasements consist of steel pipe of a larger diameter than the primary pipe. The primary pipe is supported within the encasement using one of two methods. In one method, the primary pipe rests on a flat bar. This bar is welded to the encasement and the primary pipe. This type of support anchors the primary pipe to the encasement. The other method involves welding two bars to the primary pipe only, which allows the primary pipe to expand relative to its encasement. Figure 3 shows both types of support.

Process pipelines in the AN Tank Farm include both slurry and supernatant lines. All slurry lines are 2 in. in diameter and are encased in 4-in.-diameter pipe. Jumpers can be installed at Valve Pits AN-A and AN-B so slurry can be routed to the respective tanks through seven lines (SL-161 through SL-167). The two valve pits are interconnected with SL-168.

Except for line SN-260, all of the 241-AN supernatant lines are 3-in.-diameter carbon steel pipe encased in 6-in.-diameter carbon steel pipe. Supernatant lines connect Valve Pits AN-A and AN-B with the AN Tank Farm central pump pits. Line SN-260 is a 2-in. line identical to slurry line SL-160 and is one of the few exceptions to the rule that supernatant lines are 3 in. in diameter.

Figure 3. Support of Pipe Encasement.

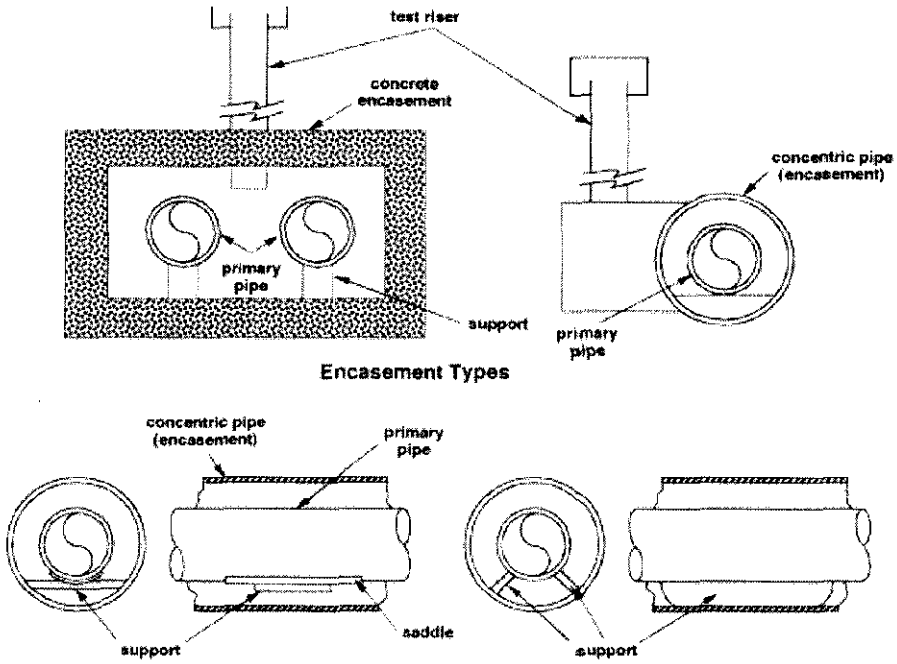

AP Tank Farm

All AP process pipelines are constructed of schedule 40 carbon steel pipe and encased in heat-traced, schedule 40, carbon steel pipes. The pipe encasements consist of steel pipe of larger diameter than the primary pipe. The primary pipe is supported inside the encasement using one of the methods shown in Figure 3.

Process pipelines in the AP Tank Farm include both slurry and supernatant lines. All supernatant lines are 3-in.-diameter carbon steel, encased in 6-in.-diameter carbon steel pipe. Each AP central pump pit is connected with the AP valve pit by a supernatant line. All of these lines are sloped toward the respective central pump pit so that waste drains back to the DST. Two supernatant lines connect to the AW Tank Farm. Lines SN-609 and SN-610 both connect to the central pump pit, AW-02A. The central pump pit, AP-02A, is connected with pump pit AP-02D by process line SN-622. This line is used to pump Tank 241-AP-102. Line SN-621 was used for grout feed from the Grout Service Facility and currently is out of service. All slurry lines are 2-in.-diameter pipe encased in 4-in.-diameter pipe. Two slurry lines connect to the AW Tank Farm. Line SL-509 connects with the AW-B Valve Pit, while line SL-510 connects with the AW-A Valve Pit. Each AP central pump pit is connected with the AP valve pit by a slurry line. These lines all are sloped toward the respective central pump pit.

AW Tank Farm

With four exceptions, all 241-AW process pipelines are constructed of schedule 40 carbon steel pipe and encased in schedule 40 carbon steel secondary pipes. The exceptions are supernatant line SN-274 and the three PUREX lines, V-021, V-022, and V-023, which have primary pipes made of schedule 40 stainless steel. The three lines to the PUREX Facility no longer are in service.

The pipe encasements consist of steel pipe of larger diameter than the primary pipe. The primary pipe is supported inside the encasement using one of the methods shown in Figure 3.

Process pipelines in the AW Tank Farm include both slurry and supernatant lines. All slurry lines are 2 in. in diameter and encased in 4-in.-diameter pipe. Because of modifications from the W-314 project, slurry is routed from the 242-A Evaporator through SL-167 to the 241-AW-B Pit where it is then routed through supernatant transfer lines to a receiver tank. The two valve pits are connected with line SL-169.

All of the 241-AW supernatant lines are 3-in.-diameter carbon steel, encased in 6-in.-diameter carbon steel pipe. Supernatant lines connect the AW-A and AW-B Valve Pits with the AW Tank Farm central pump pits, and with the 241-A-A and 241-A-B Valve Pits, and the PUREX Plant. The liquid may be transferred to the Tank 241-AW-102 Central Pump Pit from Valve Pit AW-A via line SN-267 and to AW-B via line SN-268 or can be routed to the AP Tank Farm via line SN-609 or SN-610. From these lines, the liquid passes through a drop leg into Feed Tank 241-AW-102. Lines SN-220 and SN-219 connect the AW-A and AW-B Valve Pits with the A-A and A-B Valve Pits, respectively.

Evaporator feed is pumped from the 02E feed pump pit at Tank 241-AW-102, via line SN-267 and SN-268, to the 242-A Evaporator. Recirculation line SN-272 also connects the feed pump in

Tank 241-AW-102 with a drop leg in the 241-AW-102 central pump pit through a diaphragm-operated valve. The valve regulates the supernatant flow rate during transfer to the 242-A Evaporator. Currently, transfer line SN-270 is used for transfers from Catch Tank A-350.

Two supernatant lines connect Valve Pit AW-B with Diversion Box 241-A-151. One supernatant line connects Diversion Box 241-A-151 with Valve Pit AW-A. However, these lines are no longer are in service because the PUREX Plant is not in operation. Waste streams can be transferred in both directions through lines that connect the AW valve pits with the central pump pits. The Central Pump Pit 241-AW jumpers can be valved for supernatant line connection to either a pump or a drop leg.

AY Tank Farm

Process pipelines associated with the AY Tank Farm include both slurry and supernatant lines. The lines are constructed of either carbon steel or stainless steel piping. The form of encasement varies, and can consist of either a secondary pipe or a concrete trench. The secondary pipe encasements consist of steel pipe of larger diameter than the primary pipe. The primary pipe is supported inside the encasement using one of the methods shown in Figure 3.

The concrete encasement consists of a reinforced concrete trough and cover block. The width of the trough depends on the number of primary pipes the trough contains. The troughs are covered with either precast concrete cover blocks placed on top of the trough or steel plates and with concrete poured in place. The concrete joints are sealed with asphalt and tar. These lines are considered as noncompliant under the WAC requirements; however, some are still in use to support transfers from miscellaneous catch tanks.

Waste transfers no longer use Catch Tank 241-AX-152. Catch Tank 241-AX-152 is known to leak waste. For waster transfers in the AY Tank Farm, lines SL-500 and SL-501 are used to bypass the faulty diversion box. Waste is transferred between tank 241-AY-101 and Diversion Box 241-AX-155 through line 4"PW-C108/4503. Waste can be transferred between Diversion Box 241-AZ-152 and Tank 241-AY-101 through 3-in. line 4608/4550.

Waste is transferred between Tank 241-AY-102 and Diversion Box 241-AX-155 through line 4"PW-C106/4506. Waste can be transferred from Diverter Station 241-AR-151 through line 3"NHW-V720 to Tank 241-AY-102. Waste also can be transferred between Valve Pit 241-AX-B and Tank 241-AY-102 through line 2"SL-502.

AZ Tank Farm

Process pipelines associated with the AZ Tank Farm include both slurry and supernatant lines. The lines are constructed of either carbon steel or stainless steel piping. The form of encasement varies and can consist of either a secondary pipe or a concrete trench. The primary pipe is supported inside the encasement using one of the methods shown in Figure 3.

As in the AY Tank Farm, several noncompliant PW and PSW lines are used in the AZ Tank Farm. Waste transfers in the AZ Tank Farm no longer can use Diversion Box 241-AX-152. Diversion Box 241-AX-152 is known to leak waste. For waste transfers in the AZ Tank Farm, lines SL-600 and 601 are used to bypass the faulty diversion box. Waste is transferred between

Tank 241-AZ-101 and Diversion Box 241-AX-155 through line 4"PW-4509/4507. Line 2"SL-501 connects Tank 241-AZ-101 with Tank 241-AZ-102.

Waste is routed between Tank 241-AZ-102 and Diversion Box 241-AZ-152 through line 6"PW-PSW-D602. Waste also is transferred between Tank 241-AZ-102 and Diverter Station 241-AX-152 through line 4"PW-4511/B107. Waste is routed between Tank 241-AZ-102 to Diversion Box 241-AX-155 through 4"PW-4512/4600. Waste also is routed between Tank 241-AZ-102 and Valve Pit 241-AX-A through lines 2"SL-500 and 2"SN-600. Waste also can be transferred to Valve Pit 241-AN-B through lines 2"SL-160 and 2"SN-260. Line 2"SL-501 connects Tank 241-AZ-102 with Tank 241-AZ-101.

4.1.3.1.2 Jumpers

Jumpers are rigid or flexible sections of piping installed in transfer-associated structures to connect transfer lines during transfers. The connection at the transfer structure is a PUREX nozzle. The jumper configurations have a PUREX head connector at the end to interface with the transfer structure nozzle. The rigid jumpers are made of schedule 40 stainless or carbon steel pipe; the flexible jumpers are made of braided stainless or carbon steel flexible hose. A typical rigid jumper being installed in a valve pit is shown in Figure 4.

Figure 4. Rigid Jumper Assembly.

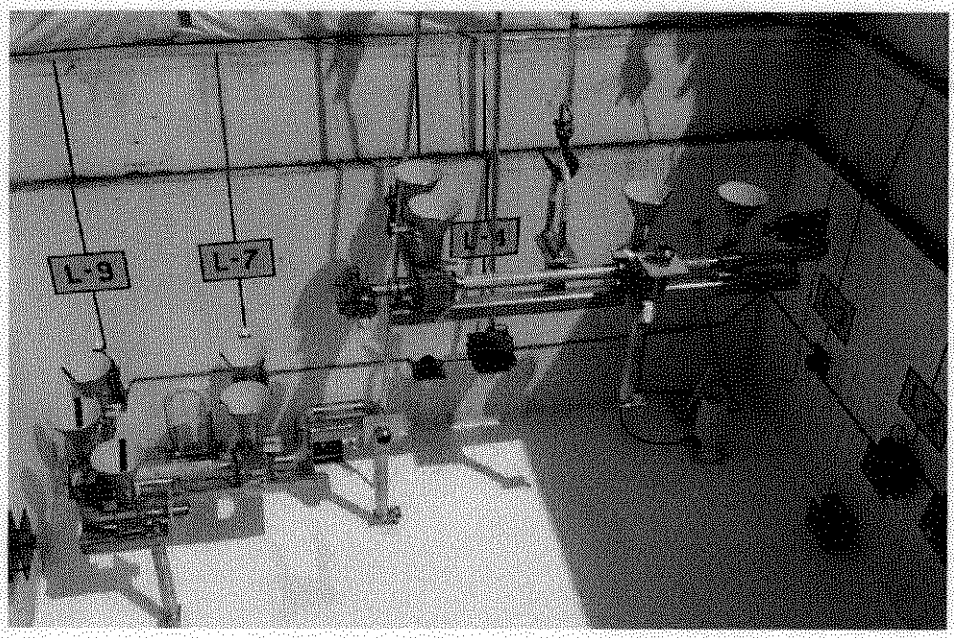

Valves are fabricated in rigid jumpers so that opening and closing the valves can change waste routes. Both two-way and three-way valves are used to divert the flow where needed. The valve handles are located above the top of the pit cover blocks, and valve stems extend downward through penetrations in the cover blocks. A flow diagram painted on the cover block assists the operator in correct valve alignment and in avoiding misrouting of the waste.

Jumper design is controlled by the use of WHC-SD-RE-DGS-002, *Jumper Design Standard*, while the fabrication is controlled by the use of HS-BS-0084, *Jumper Fabrication*.

4.1.3.1.3 Transfer Pumps

To provide the motive force for moving waste through the transfer lines, transfer pumps are installed in the DST pump pits, with the motor located in the pit and the intake located in the tank waste. Transfer pumps generally are mounted on the 12-in. riser of the central pump pit. A rigid or flexible jumper (Section 4.1.3.1.2) connects the pump discharge to the underground transfer lines. Typically, transfer pumps are deep-well, vertical turbine pumps, where the pump intake is rigid pipe that extends to a fixed depth in the tank waste. Some transfer pumps have a floating intake, which is a flexible jumper connected to rigid pipe that normally is 33 ft long and extends down into the waste approximately 200 in. from the tank bottom. The waste can continue to be drawn down until pump suction is lost or the pump flexible jumper is fully extended. The New Generation Transfer Pump is a submersible pump provided with in-line dilution capability and a variable-frequency drive; however, this pump currently is used only in the SY Tank Farm in the 200 West Area.

The most up-to-date list of the tank farm pumps can be found in SD-WM-RPT-025, *Tank Farms Pumping Equipment List*. Typical pump curves are found in the vendor information files listed in Appendix C.

4.1.3.2 204-AR Unloading Facility

The 204-AR Unloading Facility is a reinforced concrete building containing an unloading room, a control room, a change room, and a mechanical (chemical mixing) room. The building dimensions are 25 ft 6 in. high, 65 ft long, and 40 ft wide. FDM-T-290-00001 contains general information with Figure 9 showing general outline of the facility. The drawing index is shown in Hanford Site Drawing H-2-70682, *Civil/Drawing Index Site Plan*. Hanford Site Drawings 71503, *Piping Plans*, H-2-71504, *Piping Plans & Sections*, and H-2-71505, *Piping Plans Sections & Details*, show the piping, H-2-70704 *Piping Waste Unloading Facility* shows more of the building.

The SS reduced pressure backflow preventors, BFP-3 and BFP–4, are located in the 204-AR unloading room, as shown in H-2-70703, *Engineering Flow Diagram*. The leak detector for the facility is AR204-WT-LDK-001 (LDE-SMP), located in the sump of the unloading room, next to waste tank TK-1. The leak detector is interlocked to several valves, but not to the MPSS circuit, see TF-FT-209-006 for details.

4.1.3.3 Miscellaneous Transfer-Associated Structures

Miscellaneous transfer-associated structures are structures that contain support equipment for the process piping. They consist of COBs, valve pits, pump pits, diversion boxes, diverter stations, and catch tanks. Pump pits, valve pits, and diversion boxes have cover blocks and typically house valve manifolds, jumpers, and some in-line temperature, pressure, density, and flow elements. They also provide secondary containment for transfer valves and associated piping to minimize the potential for leakage of radiological and toxicological waste to the environment

and are designed to provide shielding, enable leak detection, and allow collection of process leakage.

Above-grade portions of these structures provide shielding from the radioactive waste for worker protection, provide an impaction surface that prevents leaked waste from jetting directly into the atmosphere, and provide secondary confinement to minimize the potential for leakage of radiological and toxicological waste to the environment.

Except for some COBs, miscellaneous transfer structures have cover blocks, shielded covers, or pressure-retaining flange covers with vent valves. These covers perform many functions, including the following:

- Provide access to the components within the pits
- Provide shielding from the radioactive waste for worker protection
- Provide an impaction surface that prevents a waste leak from jetting directly into the atmosphere
- Limit the release of waste aerosols to the atmosphere by means of tortuous air passages between adjacent surfaces that promote impingement and condensation
- Limit the release of aerosols generated by waste leak splattering and splashing.

The cover blocks usually are constructed of reinforced concrete. Temporary covers are allowed for pits, COBs, and diversion boxes and meet the functional requirements of permanent covers.

Many of the cover blocks have penetrations to facilitate operation and/or functional testing of the components inside the transfer-associated structures. The size, number, and location of the penetrations within a cover block are appropriate for the interfacing components and required observation and inspection ports. The cover blocks also have lifting bails that are adequate for lifting them to provide access to the pits.

Cleanout Boxes

The COBs were installed so slurry lines could be cleaned if plugs developed. Typically, COBs are positioned approximately every 100 ft along some slurry lines. Table 4 lists the COBs associated with the WTS. Figure 5 shows the configuration of a typical COB. Some COBs associated with transfers between tank farms and the 242-A Evaporator use pressure-retaining flange covers with vent valves. The configuration of COBs with pressure-retaining flange covers is schematically depicted on drawing H-14-020802, Sheets 4-6.

The use of COBs has been discontinued because of leakage and maintenance problems associated with the COB isolation valve. During waste transfers through slurry lines, the COBs must be equipped with leak detectors and be periodically monitored for leakage or covered and buried to meet the accident scenarios of the authorization-basis document.

Table 4. Clean-Out Boxes associated with WTS.

Location	Clean-Out Box		
AN Tank Farm	AN241-WT-COB-501 AN241-WT-COB-502 AN241-WT-COB-503	AN241-WT-COB-504 AN241-WT-COB-505 AN241-WT-COB-506	AN241-WT-COB-507 AN241-WT-COB-508 AN241-WT-COB-509
AP Tank Farm	N/A		
AW Tank Farm	AW241-WT-COB-501* AW241-WT-COB-502* AW241-WT-COB-503 AW241-WT-COB-504*	AW241-WT-COB-505 AW241-WT-COB-506* AW241-WT-COB-507* AW241-WT-COB-508*	AW241-WT-COB-509* AW241-WT-COB-510* AW241-WT-COB-511 AW241-WT-COB-512
AY Tank Farm	AY241-WT-COB-312		
AZ Tank Farm	AZ241-WT-COB-501 AZ241-WT-COB-502 AZ241-WT-COB-503 AZ241-WT-COB-504	AZ241-WT-COB-505 AZ241-WT-COB-506 AZ241-WT-COB-507 AZ241-WT-COB-508	AZ241-WT-COB-509 AZ241-WT-COB-510
242-A Evaporator	COB-A-30*		

* Clean-out box uses pressure-retaining cover with vent valves.

Figure 5. Typical Layout of Cleanout Box.

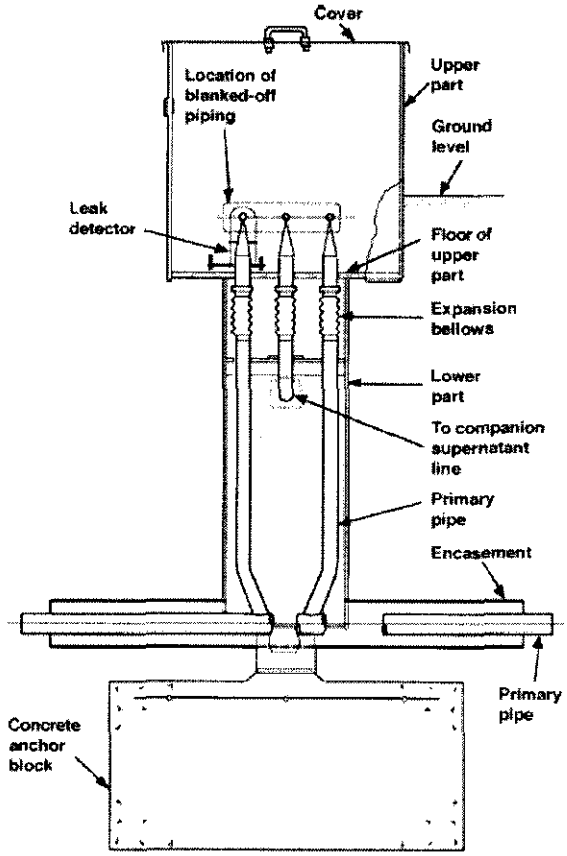

Valve Pits

Valve pits allow waste to be diverted to various transfer lines by means of valves, jumpers, or both. Most tank farms have at least one valve pit that allows waste to be directed to and from the individual tanks of that tank farm. These pits are below grade and have removable cover blocks that lie slightly above grade. The pits include either a floor-mounted or "hanging" (Project W-314 design) leak detector, which activates when liquid accumulates on the pit floor. A drain is provided through the bottom of the pit so that liquids can be drained if necessary. Table 5 lists the valve pits associated with the WTS. The AY Tank Farm does not have valve pits.

Table 5. Valve Pits Associated with the WTS.

Tank Farm	Valve pits
A	241-A-A, 241-A-B
AN	241-AN-A, 241-AN-B
AP	241-AP
AW	241-AW-A, 241-AW-B
AX	241-AX-A, 241-AX-B, 241-AX-501
AY	N/A
AZ	241-AZ-VP

Pump Pits

Pump pits are associated with specific tanks. Each tank has a central pump pit and some tanks have sluice pits or feed pump pits. Table 6 lists the pump pits and sluice pits; Figures 6 and 7 show a typical pump pit.

Table 6. Pump Pits and Sluice Pits Associated with the WTS.

Tank Farm	PIT			
AN	241-AN-01A	(Central Pump Pit)	241-AN-05A	(Central Pump Pit)
	241-AN-02A	(Central Pump Pit)	241-AN-06A	(Central Pump Pit)
	241-AN-03A	(Central Pump Pit)	241-AN-07A	(Central Pump Pit)
	241-AN-04A	(Central Pump Pit)		
AP	241-AP-01A	(Central Pump Pit)	241-AP-05A	(Central Pump Pit)
	241-AP-02A	(Central Pump Pit)	241-AP-06A	(Central Pump Pit)
	241-AP-02D	(Feed Pump Pit)	241-AP-07A	(Central Pump Pit)
	241-AP-03A	(Central Pump Pit)	241-AP-08A	(Central Pump Pit)
	241-AP-04A	(Central Pump Pit)		
AW	241-AW-01A	(Central Pump Pit)	241-AW-04A	(Central Pump Pit)
	241-AW-02A	(Central Pump Pit)	241-AW-05A	(Central Pump Pit)
	241-AW-02E	(Feed Pump Pit)	241-AW-06A	(Central Pump Pit)
	241-AW-03A	(Central Pump Pit)		

Table 6. Pump Pits and Sluice Pits Associated with the WTS.

Tank Farm	PIT			
AY	241-AY-01A	(Central Pump Pit)	241-AY-02A	(Central Pump Pit)
	241-AY-01B	(Sluice Pit)	241-AY-02B	(Sluice Pit)
	241-AY-01C	(Sluice Pit)	241-AY-02C	(Sluice Pit)
	241-AY-01D	(Sluice Pit)	241-AY-02D	(Sluice Pit)
	241-AY-01E	(Sluice Pit)	241-AY-02E	(Sluice Pit)
AZ	241-AZ-01A	(Central Pump Pit)	241-AZ-02A	(Central Pump Pit)
	241-AZ-01B	(Sluice Pit)	241-AZ-02B	(Sluice Pit)
	241-AZ-01C	(Sluice Pit)	241-AZ-02C	(Sluice Pit)

Figure 6. Typical Pump Pit–Plan View.

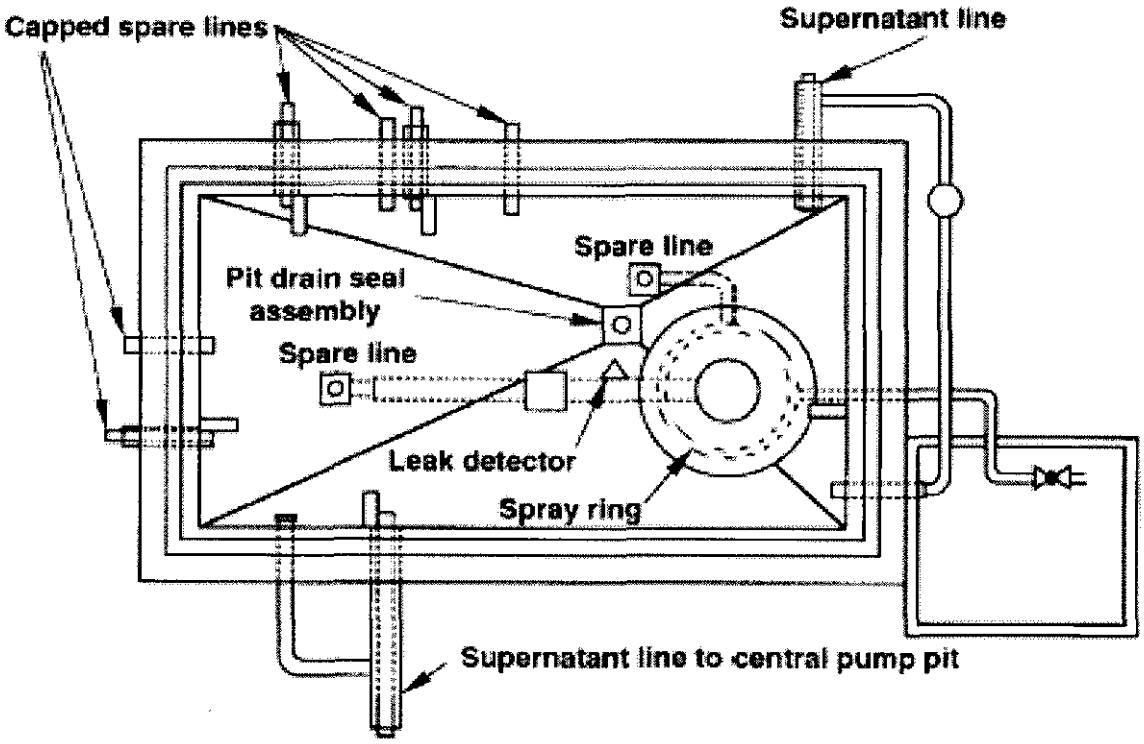

Figure 7. Typical Pump Pit–Section View.

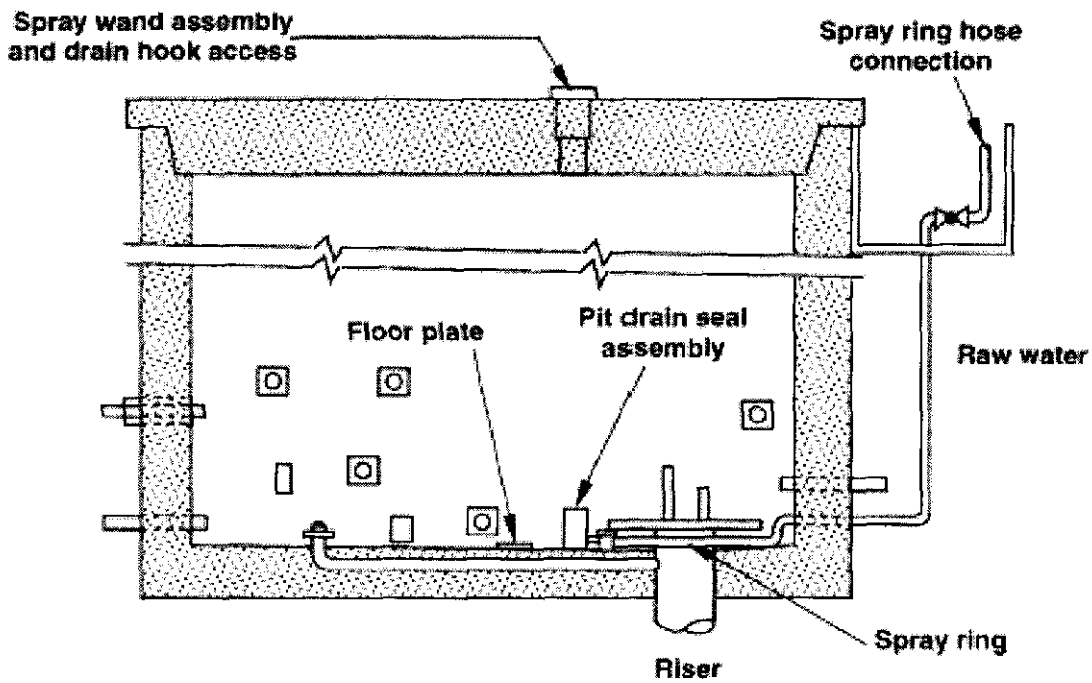

Most central pump pits are located over the center of the tanks, and are used for both pumping waste from the tank and transferring waste into the tank. When transferring waste into the tank, jumpers and valves are installed in the pit. These direct the flow of waste into the tank through a drop leg or a slurry distributor. Drop legs are typically used for supernatant transfers and distributors are used for slurry transfers. Drop legs are vertical pipes (risers) that extend below the tank dome. Typically, the drop legs only extend into the tank's headspace. However, in the AY and AZ tanks, some drop legs extend below the waste level and discharge near the tank bottom. Slurry distributors disperse the slurry evenly within the tank. The distributors have a drop leg that directs the slurry discharge outward from the center of the tank. The drop leg has a handle that extends above the pit's cover block and can be rotated manually. The pit cover block is marked with a distributor-indexing diagram to assist when rotating the handle. "Do Not Slurry" zones appear on each indexing diagram. These zones line up with in-tank equipment, such as level instrumentation or ventilation intake piping.

When pumping waste out of a tank, a transfer pump normally is installed in the central pump pit. The pit is designed to hold a transfer pump along with additional piping and jumpers. Not every central pump pit contains an existing pump; Hanford Site Drawing H-14-104175 shows which tanks have pumps installed. Tanks without pumps have dummy pump heads installed on the pump flange. Theoretically, pumps are portable. In practice, the pumps usually are permanently installed because of contamination issues.

Sluice pits are additional pits, off center in the tank, that could contain sluice assemblies. These allow the injection of a high-pressure stream of liquid into the tank's sludge to break up the

sludge. Only the AY and AZ Tank Farms use sluice pits. Each tank in the AY Tank Farm has four sluice pits; each tank in the AZ Tank Farm has two sluice pits.

Feed pump pits supplement the central pump pit. These are located off center on Tanks 241-AW-102 and 241-AP-102. These pits were designed and used for specialized purposes such as transferring feed waste to the 242-A Evaporator or to the grout facility.

Diversion Boxes

Diversion boxes are used to establish waste transfer routes between tank farms. Table 7 lists the diversion boxes associated with the WTS. Diversion boxes are below grade, reinforced-concrete structures that provide a flexible method of directing liquid waste from a given point to another given point. All diversion boxes drain to a catch tank or nearby underground storage tank, and all boxes contain a leak detector probe that alarms if a leak occurs that causes waste to accumulate in the diversion box. The top of the diversion box usually is a concrete block that usually extends above grade. The cover blocks vary in thickness from box to box. Some diversion boxes are lined with steel.

Table 7. Diversion Boxes Associated with the WTS.

Location	Diversion box	
A Tank Farm AX Tank Farm AR Tank Farm	241-A-151 241-AX-152	241-AR-151 241-AX-155
AY Tank Farm	241-AY-501	
AZ Tank Farm	241-AZ-152	
Other	241-ER-151 241-ER-152	241-ER-153

Diversion boxes also provide confinement for leaks in waste transfer lines, which drain back to the boxes through the encasement, and leaks at jumper nozzle connections. Transfer lines are connected inside the diversion box by installing a jumper between the connecting nozzles. The basic diversion box was designed to operate without valves; however, some transfer operations are better served by using valves (e.g., when waste is transferred from multiple facilities to a common storage tank). In this type of transfer, rigid jumpers and valves are required.

Diverter Stations

Diverter stations were designed to accommodate only gravity fluid flow. A diverter station allows routing changes without removing cover blocks or changing jumpers. Several incoming waste transfer lines are routed into a 50-gal receiver tank. A moveable spout on the bottom of the receiver tank directs the flow of waste to any one of several exit pipe funnels located inside the diverter station. Each routing funnel represents a direct transfer line to a specific receiver tank. A catch tank located in the bottom cell of the diverter station collects any spillage or leakage. The catch tank is equipped with a water jet so that accumulated waste solutions can be transferred to a waste storage tank. Flex jumpers also can be used in the diverter stations to route waste transfers.

Catch Tanks

Catch tanks are underground storage tanks used to collect waste drained from waste transfer systems and DST equipment. The four basic catch tank designs are direct-buried concrete, direct-buried steel, steel tanks contained in a vault or pit; and concrete vaults with steel liners. Figure 8 shows the layout of a typical catch tank.

Waste from catch tanks can be pumped to a DST via a pump pit through an underground pump-out line. In most instances, a submersible or turbine pump is installed in the catch tank to remove liquid; however, in some instances, water jets also are used. When necessary, catch tanks are pumped out by using above-ground lines and a tank truck.

The catch tanks associated with the 200 East Area DST WTS are described in the following paragraphs. Catch Tanks 241-A-302A, 241-A-417, 241-AX-152, 241-AZ-154, and 241-EW-151 primarily support other systems or are inactive and are not considered part of the WTS.

241-A-350 Catch Tank. The 241-A-350 Lift Station is located southeast of Tank 241-A-106 in the A Tank Farm. The lift station has a pump pit over a corrugated steel caisson or vault that contains the 241-A-350 Catch Tank. The 776-gal stainless-steel catch tank receives drainage from the 241-A-A 241-A-B valve pits and the A Tank Farm COBs. The tank contains a waste transfer pump, providing the capability to pump the tank's contents through an encased line.

Figure 8. Typical Layout of a Catch Tank.

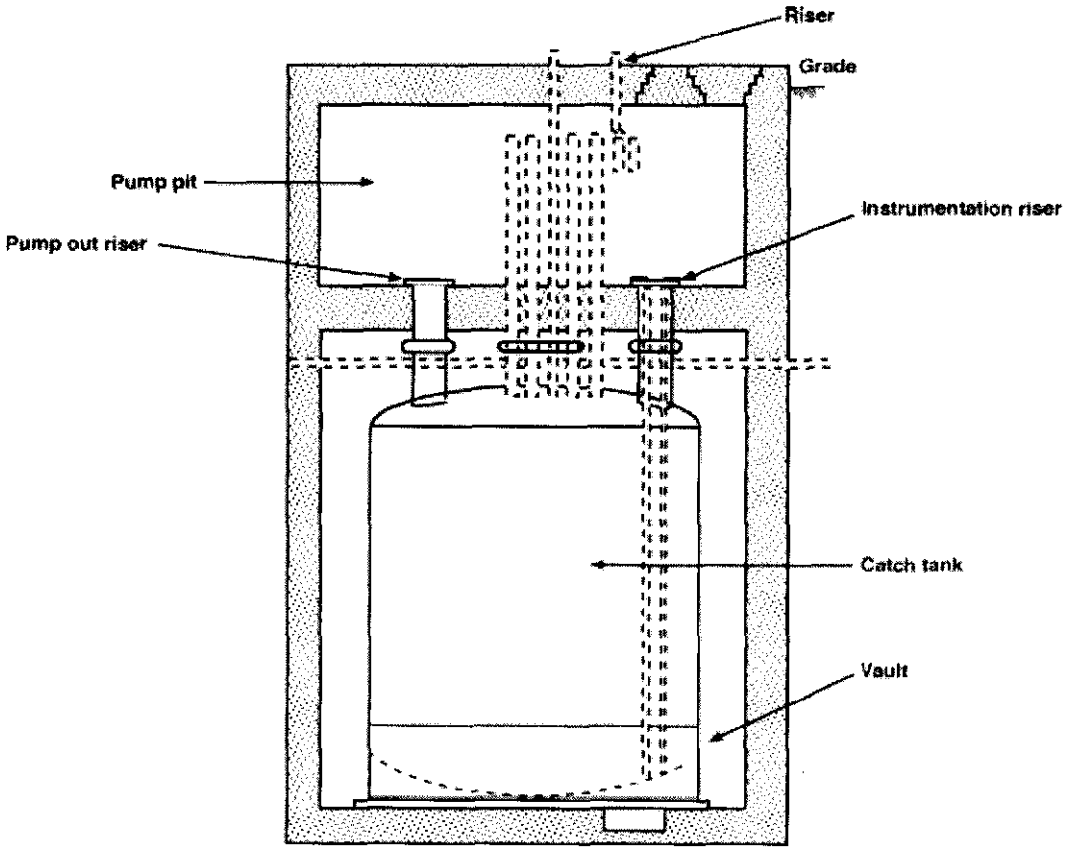

241-AZ-151 Catch Tank. This 11,900-gal carbon steel catch tank, which consists of a pump pit on top of a catch tank, is buried approximately 17 ft below grade. The 241-AZ-151 catch tank is L shaped. All inside surfaces are lined with steel. This catch tank receives drainage from the 241-AZ-152 Diversion Box and condensate from the AY/AZ Tank Farm ventilation tank primary system.

241-ER-311 Catch Tank. This 17,682-gal stainless-steel catch tank, which consists of a pump pit on top of a catch tank, is buried approximately 20 ft below grade. The 241-ER-311 catch tank is a horizontal cylindrical tank. This catch tank receives drainage from the 241-ER-151 and 241-ER-152 diversion boxes.

244-A DCRT Catch Tank. This 16,280-gal stainless-steel catch tank is located inside the 244-A DCRT structure. The 244-A DCRT catch tank is a vertical cylindrical tank. This catch tank receives drainage from the 244-A DCRT pump pit (transfer system low point) and the 241-ER-153 Diversion Box.

Chemical Addition:

The following three general methods are used for adding chemicals to the DSTs.

- **Standard Method**. Many waste types do not require chemicals to be mixed into the waste to prevent precipitation. For these waste types, a valve and cam-and-groove fitting on the DST riser are used to offload a chemical from a tanker truck into the DST. The chemical flows through a temporary hose and is dropped into the vapor space of the tank. The chemical drops about 15 to 50 ft into the waste. This method is described fully in RPP-9438.

- **Tank 241-AN-102**. In Tank 241-AN-102, chemicals need to be mixed into the waste to avoid precipitation of solids. A special jumper and slurry distributor were installed in the AN-02A pit to allow injection and mixing of the chemical into a waste stream generated by the AN-102 transfer pump. In this tank, the chemical is offloaded from a tanker truck through a temporary hose at a specific rate and sprayed into the waste stream. The objective is to mix the chemical and waste in a controlled ratio to avoid precipitation of solids. RPP-8195 gives details for chemical addition to Tank 241-AN-102.

- **Tank 241-AN-107**. In Tank 241-AN-107, chemicals need to be mixed into the waste to avoid precipitation of solids. The chemical is injected at a specific rate into the inlet of a waste transfer pump installed in central pump pit 07A. The pump's multiple impellers mix the chemical into the waste while the waste stream is being pumped back to the tank. Metering the chemical into the waste stream at the correct rate avoids precipitation of the waste. The chemical is offloaded from the tanker truck through a temporary hose into stainless steel piping. The piping extends down the side of the deep-well turbine pump and allows the chemical to be injected into the inlet of the pump while the pump is moving waste. RPP-9771 gives details of the equipment, monitoring and control for Tank 241-AN-107.

4.1.3.4 Instrumentation and Control System

Instrumentation associated with the WTS can be divided into two categories. Instrumentation can be associated with process control or with leak detection (the MPS System). Process instrumentation includes flow meters, pressure gauges, temperature monitors, and other instrumentation. This type of instrumentation aids the operator in monitoring and controlling the transfer. Relatively few control features are associated with the process instrumentation. Instead, the operator monitors the process instrumentation and adjusts the pumping parameters manually. Section 4.1.4.1 describes these instruments and how they are used during transfers.

The second type of instrumentation and control is associated with leak detection. These components make up the MPSS. This system is mostly automated. If a leak is detected, the transfer pump usually is stopped automatically. Section 4.1.4.2 describes these instruments and their control features.

4.1.4 Principles of Operation

4.1.4.1 Transferring Waste

Before transferring waste, Tank Farm Operations performs the following activities:

- Verify that sufficient space is available in the receiving tank
- Verify the waste chemistry to ensure that the waste to be transferred is compatible with the waste in the receiving tank
- Review criticality safety analyses and verifying equipment operability.

A baseline material balance is developed before the transfer for both the sending and receiving storage tanks. Material balances are required for all transfers. When a transfer route is selected, the valves are manually actuated and lined up (positioned) correctly for the routing required by the transfer. The material balance, in general, provides a second method for detecting leaks in the intended transfer route and leaks that might occur because of a misroute.

During the transfer, Tank Farm Operations monitors the system for safe operation. The transfer operations are controlled at the individual tank farm control rooms, and the control room alarms may be connected to the continuously manned 242-A Evaporator control room. The material balance is reviewed periodically during the transfer to provide early leak detection and avoid filling tanks above safe levels. Tank farm practice is to measure the volume of waste transferred by the difference in the beginning and ending levels of each tank involved in the transfer. Generally the allowable material balance discrepancy on waste transfer data sheets (WTDS) is ± 0.5 in.. The Waste Volume Projection group rounds off at 1,000 gal for DST material balances. Liquid levels are recorded on a WTDS and on the daily operating report. Achieving a material balance is more complicated when a transfer into a particular tank is made simultaneously with a transfer out of that tank. Liquid levels of all three tanks must be considered in the calculation. Material balances during evaporator campaigns also are complicated because transfers into and out of the evaporator feed tank and recycle tank are

sometimes made simultaneously over a period of weeks. With the exception of feed to the 242-A Evaporator, no flow meters or totalizers are installed in the WTS.

When the height of the transferred liquid at the receiving tank reaches the prescribed level determined before the transfer, the operator shuts down the transfer operation. In the event of a leak during the transfer, the master pump shutdown circuit automatically shuts down, thereby terminating the transfer.

After completing the transfer, all associated equipment is de-energized. Transfer lines are flushed with water, if required, and a final material balance is recorded for both tanks.

4.1.4.2 Detecting and Responding to Leaks

AN Tank Farm

Each valve pit and pump pit structure contains a leak detector hard wired with relays and connected to the relay cabinet in the 271-AN Building and to the MPSS circuits in a relay panel in the 242-A Evaporator Building. When a leak is detected in a structure, the leak detector's local detection station (LDSTA) transmits a hard-wired alarm signal to the relay cabinet in the 271-AN Building to shut down the seven 241-AN transfer pumps, automatically terminating the transfer.

In addition, leak detectors from the supernatant lines SN-260 and SN-268, slurry lines SL-160 and SL-168 and process drain line DR-368, LDSTAs provide a hard-wired signal to the 271-AN relay cabinet to shut down the seven 241-AN transfer pumps, automatically terminating the transfer.

Signals from the 271-AN relay panel also are hard wired to the 242-A MPSS, which will shut down any other 200 East Area Tank Farm transfer pump, which automatically terminates the transfer from any source in the 200 East Area tank farms.

If a leak occurs along the transfer line, the leaked liquid is contained within the pipe encasement. The valve and pump pits provide containment for leaks or accident spray releases in the structures. If the leak occurs in the buried portion of the transfer lines, the encasement piping provides containment until the liquid is drained to ensure that no leakage goes into the surrounding soil. This is the same as for other tank farm transfer systems.

AP Tank Farm

Each valve pit and pump pit structure contains a leak detector hard wired to the intrinsically safe relay cabinet in the 271-AP Building and to the MPSS circuits in a relay panel in the 242-A Evaporator Building, indicated on the local annunciator panel in the 271-AP Building and sent to the Tank Monitor and Control (TMAC) computer. When a leak is detected in a structure, the relay transmits a hard-wired alarm signal to another relay cabinet in the 271-AP Building to shut down the eight 241-AP transfer pumps, automatically terminating the transfer.

Signals from the 271-AP relay panel also are hard wired to the 242-A MPSS, which will shut down any other connected pump, which automatically terminates the transfer. Figure 8 shows the two common types of leak detectors.

AW Tank Farm

Each valve pit and pump pit structure contains a leak detector hard wired with relays and connected to the relay cabinet in the 271-AW Building and to the MPSS circuits in a relay panel in the 242-A Evaporator Building. When a leak is detected in a structure, the LDSTA transmit a hard-wired alarm signal to the relay cabinet in the 271-AW relay cabinet to shut down the six 241-AW transfer pumps, automatically terminating the transfer.

In addition, leak detectors from the supernatant lines SN-274, 267, 268, 269, 270, 219, 220, slurry lines SL-167 and 168 and process drain lines DR-334, 335, 361, LDSTAs provide a hard-wired signal to the 271-AW relay cabinet to shut down the six 241-AW transfer pumps, automatically terminating the transfer.

Signals from the 271-AW relay panel also are hard wired to the 242-A MPSS, which will shut down any other 200 East Area Tank Farm transfer pump, which automatically terminates the transfer from any source in the 200 East Area Tank Farm.

AY/ AZ Tank Farms

Each valve pit and pump pit structure contains a leak detector hard wired with relays and connected to the relay cabinet in the 241-801-AY and 241-801-AZ Buildings and to the MPSS circuits in a relay panel in the 242-A Evaporator Building. When a leak is detected in a structure, the LDSTAs transmit a hard-wired alarm signal to the relay cabinet in the 241-801-AY or 241-801-AZ Building to shut down the two 241-AY or the two 241-AZ transfer pumps, automatically terminating the transfer.

In addition, leak detectors from the 241-AY slurry lines SL-502, 503, 504, and 505; process drain line DR-700; the 241-AZ slurry lines SL-500 and 501; and supernatant lines SN-600 and 601 LDSTAs transmit a hard-wired signal to the relay cabinet in the 241-801-AY or 241-801-AZ Buildings to shut down the two 241-AY or the two 241-AZ transfer pumps, automatically terminating the transfer.

Signals from the 241-801-AY or 241-801-AZ relay cabinets also are hard wired to the 242-A MPSS, which will shut down any other 200 East Area Tank Farm transfer pump, which automatically terminates the transfer from any source in the 200 East Area Tank Farm.

The specific-gravity/weight-factor system is used at the AY and AZ Tank Farms to measure the liquid levels in the four leak-detection pit wells. The system detects any increase in level that might indicate leakage from the secondary tanks. The secondary confinement tanks receive leaked waste from the AY and AZ Tank Farm waste transfer lines. The instrumentation equipment for the specific-gravity/weight-factor system is housed in the leak-detection well transmitter enclosure located adjacent to the leak-detection pits. Typically a specific-gravity/weight-factor system consists of three dip tubes, sometimes called bubbler tubes, extending into the liquid storage space, and a signal transmitter station to convert the static pressure signals into pneumatic control signals for remote recording and alarm activation. Two of the three dip tubes extend into the liquid; one terminates just above the bottom of the pit well, and the other terminates about 10 in. above the bottom of the pit well. The third dip tube terminates in the air space just above the highest predictable liquid level. Instrument air is forced

through the dip tubes sufficient to bubble the air through the liquid. The pressure required to maintain these flows is converted into a 0- to 20-lbf/in.^{2} (gauge) pneumatic signal at the signal transmitter station and fed to the instrumentation panel for conversion into level and specific-gravity information. The differential pressure between the two dip tubes below the liquid level converts into the specific gravity of the liquid. The differential pressure between the lowest dip tube and the air space dip tube is the weight factor, which converts into a liquid-level reading.

Figure 5 shows the bubbler tubing from a transmitter enclosure serving a typical leak-detection pit well. It is shown as part of a typical DST tank section. Key arrangement drawings, which are similar for all DST tank farms, relate to the specific-gravity/weight-factor systems at the AY and AZ Tank Farms. (Appendix A lists the drawings.)

The six leak-detection pits are equipped with specific-gravity/weight-factor systems that monitor and record liquid levels in the leak-detection wells. Only the pit leak-detection system in the leak-detection pit is considered part of the AY/AZ DST waste storage system. However, these leak detectors currently are not functional and have been disconnected at their leak-detection transmitter enclosures. All pit leak detectors are the conductivity-probe type and are accompanied by a leak-detection transmitter enclosure. Several variations of pit leak detectors are in use, and periodically they are modified in the pits. A style currently in use at the AY and AZ Tank Farms is a combination leak detector and floor drain assembly that uses a spring-loaded check valve requiring liquid accumulation to a detectable depth before draining occurs. The floor drain is a removable assembly that includes a check valve and a conductivity leak-detector probe. A lifting bale is attached to the assembly body to allow it to be removed or replaced. The check valve prevents backflow from the riser into the pit. It is set for 0.5 lbf/in.^{2} cracking pressure (differential). Considering the negative pressure in the tank, which varies, the pit drainage will occur only when the liquid level in the pit reaches from 3 to 4 in. deep. The floor drain assembly nozzle drops into a 3.5-in. embedded fitting that is part of the drain pipe. If either the check valve or the leak-detection probe needs maintenance, the assembly can be removed by simply lifting the unit out after the probe electrical connection is unplugged.

Most other pit leak detectors are freestanding. They include an assembly to hold the probes and adjustable legs to set the probe height above the floor. On these units, unless the floor drain is equipped with a lip to cause liquid to build up before overflowing into the drain, the leak detector might not detect small amounts of leakage.

Figure 9 shows the two most common pit leak detectors; the combination leak detector and floor drain assembly, and the freestanding leak detector. Key assembly and piping and instrumentation diagram drawings relate to pit leak detectors at the AY and AZ Tank Farms. (Appendix A lists the drawings.)

Other Facilities

The 244-BX DCRT pump pit, the 241-ER-151, 241-ER-152, and 241-ER-153 diversion boxes, and the 241-ER-311 catch tank pump pit contain leak detectors that alarm to local leak detector stations.

Master Pump Shutdown System

The MPSS is a vast complicated system of pumps, electrical relays, and alarm systems. The MPSS is not fail safe because the following transfer pumps in the 200 East Area DST WTS are included in the MPSS. This list might not be complete.

- 241-AN-102A pit
- 241-AN-107A pit
- Catch tank pumps at 241-A-350, 241-AZ-151, and 241-ER-311).

4.1.4.3 Reduced Pressure Backflow Preventers

The backflow preventers, shown in Figure 10, are credited with performance of a safety function as defined in the DSA. Other backflow preventers installed in water systems on Site might be required by Washington State or the local water purveyor. They also might be required for other purposes and are not credited for purposes of nuclear safety. Backflow preventers that are not credited with performing a safety function are not discussed here, and are not covered by the requirements of this document.

Reduced Pressure Backflow Preventers. The backflow preventers used as a means of physical disconnection are reduced-pressure backflow preventers (Figure 10). Reduced-pressure backflow preventers consist of two spring-loaded poppet type check valves in the line with a differential pressure relief valve located between the two check valves. Backflow preventers are supplied with integrally piped block valves upstream and downstream of the double check valves, and appropriate test cocks (valved test connections) that allow routine testing. The check valves are designed to protect against a backflow of liquid waste upstream into the water or chemical addition systems. These check valves are reliable spring-loaded valves of durable design, each providing reasonable ensurance against a backflow of liquid into the supply line. However, in the event the downstream check valve fails and remains open allowing liquid waste to flow into the interspace or chamber between the check valves, the upstream check valve will protect against further backflow into the service supply line. Once waste flowing past the downstream check valve has pressurized the interspace chamber to a preset limit below that of the upstream supply water pressure, the differential pressure relief valve will open allowing the liquid waste to be discharged from the interspace and drain into the structure, where a leak detector is provided. The differential pressure relief valve, which drains the interspace at a pressure lower than that of the incoming water service, prevents equalization of the pressures across the upstream check valve. The upstream check valve is prevented from opening, and a backup of waste into the water supply line is prevented.

Figure 9. Typical 200 East Area Leak Detectors.

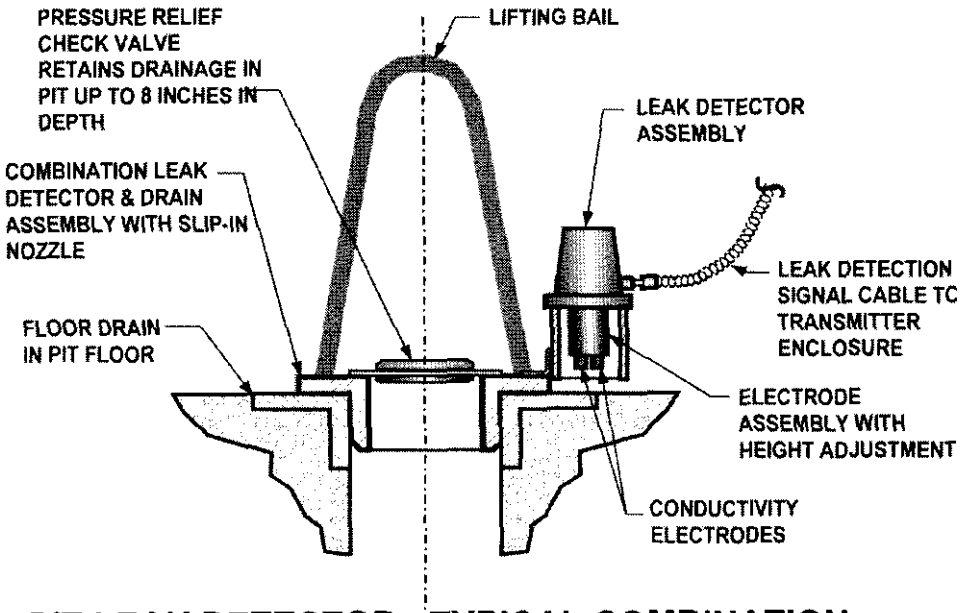

PIT LEAK DETECTOR - TYPICAL COMBINATION DRAIN PLUG & LEAK DETECTOR TYPE

NOT TO SCALE

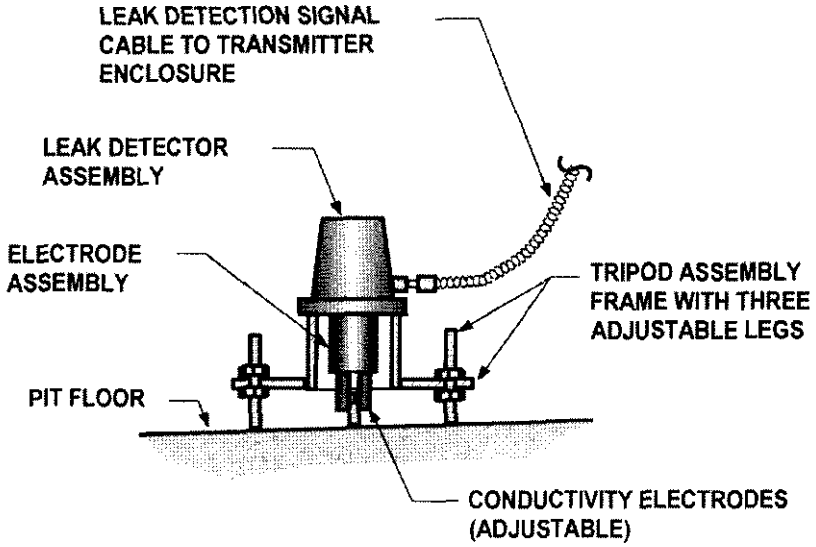

PIT LEAK DETECTOR - FREE STANDING TYPE

NOT TO SCALE

Figure 10. Backflow Preventer.

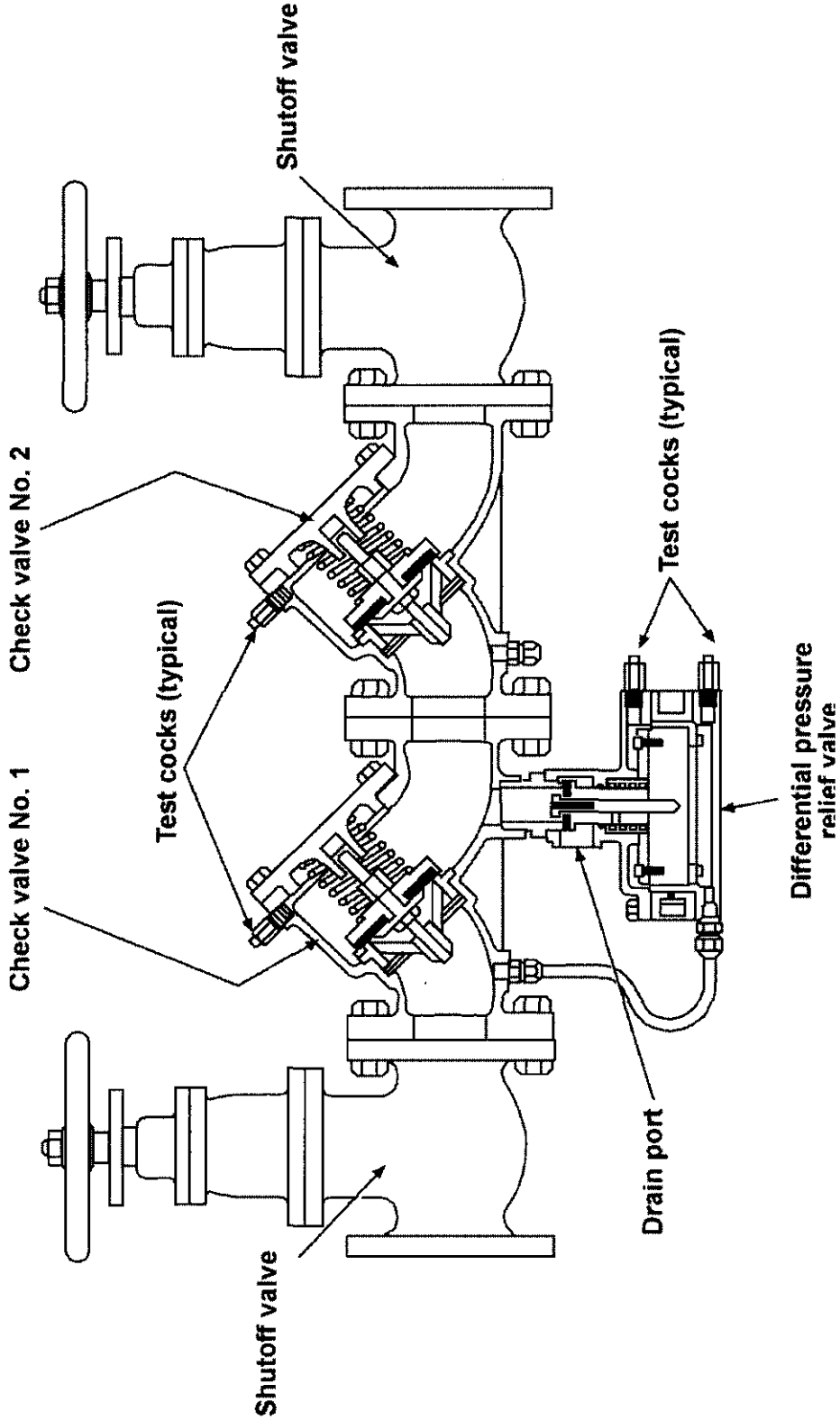

4.1.5 System Reliability Features

Systems are designed to be as reliable as possible with little or no preventive maintenance or testing required. The following design features in the 200 East Area DST WTS provide redundancy and enhance the reliability of the overall system.

- The pipe-in-pipe configuration of the transfer pipeline enhances the reliability to contain liquid and minimizes failures.
- The MPSS includes many fail-safe design features that ensure that the transfer system will reliably mitigate any leaks that could occur.
- Pump pits are designed so pumps can be replaced. If a pump fails, a replacement pump can be installed to complete the transfer.
- Alarms are redundant and annunciate in multiple locations (e.g., the instrument building of the tank farm, the 242-A Evaporator, and remotely on the TMAC system).
- In general, the transfer system affords multiple transfer routes between any two points; if one route becomes inoperable, a second route can be used.

4.1.6 System Control Features

4.1.6.1 Control Capability and Locations

The control system is a logical collection of components that operate together to control the slurry and supernatant waste transfer processes. Although physically separated, the control system components are connected using a data link or data highway so process information can be shared and communicated to remote locations when needed.

4.1.6.2 Automatic and Manual Actions

Valve Line-Up

The waste transfer operation requires that operators manually line up valves for the selected transfer route. Operators must use the painted flow diagrams on the top of the transfer structure covers to position valves as required for the correct transfer route. No motor-operated valves currently are used in the WTS system.

Low-Point Leak Detection

During an active waste transfer, if a leak is detected or a fault occurs in the transfer route, ideally an alarm signal is sent to the MPSS, which initiates an output alarm contact that is wired directly to the transfer pump shutdown circuit.

The MPSS is connected to the transfer leak detectors, waste backflow pressure switches, and the service pit backflow radiation detectors to shut down the transfer pumps. The leak detectors, pressure switches, radiation detectors, and local-mounted shutdown switches that rely on

operator action are connected to a single relay in the tank farm control building to shut down the transfer pumps in the tank farm. The local MPSS relay also sends a signal to the 242-A Evaporator Building to shut down other transfers from other 200 East Area tank farms. The ganging of several components to a single relay in a tank farm makes it difficult to identify the specific component that activated the relay to terminate the transfer. Project W-314 is designing a programmable logic controller-based system. When completed, the new system will have individual inputs for each field device, allowing the operator to immediately identify which device terminated the transfer.

4.1.6.3 Interlocks, Bypasses, and Permissives

System interlocks are designed to allow safe operation and to protect the equipment. The monitoring and control of the WTS provides permissive controls for critical aspects of the process. Interlocks may hardwired or generated by software logic in programmable controllers.

4.1.6.4 Exceptions

Some catch tank pumps and salt well pumping systems are not interlocked with the MPSS. Transfer leak detectors and service water pressure switches are required by the DSA to either interlock the transfer pump or alarm. The status of the interlock and the alarm is determined before waste transfers, as specified in the transfer procedures. For those pumps that are not interlocked to a leak detector on the physically connected transfer route, procedure requires that operating personnel be stationed to manually shut down the pump if a leak detection alarm occurs.

4.2 OPERATIONS

4.2.1 Initial Configuration (Pre-Startup)

Pre-startup conditions must be verified before a transfer begins. The operating procedures listed in Appendix B provide the details of the following provisions:

- Verify the proper valve alignment for the waste transfer mode
- Verify the leak-detection functionality and position
- Ensure that the pit covers are in place
- Verify that the electrical distribution system is operable.

4.2.2 System Startup

Transfers will be started in accordance with the approved transfer procedure for that specific transfer route. These procedures provide operators with the required permission to start the transfer.

4.2.3 Normal Operations

Normal operations for the WTS proceed as follows.

- Continue the waste transfer operation, monitored by tank levels, pump motor amperage (where available), and potentially line pressure or flow rate (where available) until the desired volume is reached. Stop pumping.

- Flush transfer lines with flush water when required.

4.2.4 Off-Normal Operations

Off-normal operations are covered in the applicable operating and emergency response procedures for the specific transfer. Generally, the response to any off-normal situation is to place the system in a safe shutdown condition. This shut down can be performed automatically or manually from the control area. Visual alarms, such as a transfer pump trip signal, are provided to alert operators to take mitigative actions.

4.2.5 System Shutdown

The system is flushed as soon as possible after a shutdown to prevent plugging.

4.2.6 Safety Management Programs and Administrative Controls

The following safety management programs and ACs specified in HNF-SD-WM-TSR-006 may apply to the equipment described in this SDD.

- AC 5.7, "Safety Management Programs"
  - Program Key Elements
    - * Nuclear Criticality Safety Program
    - * Radiological control program
    - * Industrial Hygiene Program
    - * Industrial Safety Program
    - * Waste Management Program
    - * Environmental Management Program
    - * Measuring and Test Equipment Program
    - * Training Program
    - * Excavation Program
    - * Hoisting and Rigging Program
    - * Interfacing Facilities Program

- AC 5.8, "Emergency Preparedness"
- AC 5.9, "Source Term Controls"
- AC 5.10, "Flammable Gas Controls"
- AC 5.11, "Transfer Controls"
- AC 5.12, "Administrative Lock Controls"
- AC 5.15, "Tank Farms Instrumentation"

- Applicability

  Flammable Gas Concentration
  pH

- AC 5.16, "Corrosion Mitigation Program."

4.3 TESTING AND MAINTENANCE

The testing and maintenance procedures for 200 East Area DST WTS can be found at CHG Procedures - see list on web under Technical Procedures. Appendix B, Table B-1, lists applicable procedures.

4.3.1 Temporary Configurations

Temporary configurations are not routinely used for the DST WTS. However, occasionally temporary configurations are used in accordance with the engineering change notice and unreviewed safety question process as defined in HNF-IP-0842. A master copy of all temporary configurations is kept at Central Command and Control located at the 2704 HV building in the 200 East Area.

4.3.2 Technical Safety Requirement-Required Surveillances

TSR-required surveillances are described in Section 3.4.2.

4.3.3 Non-Technical Safety Requirement Inspections and Testing

Non-TSR-required surveillances are described in Section 3.4.3.

4.3.4 Maintenance

The RPP Tank Farms Contractor (also the Operator of the 200 East Area DST WTS) has developed procedures for maintaining the leak-detection system and for calibrating various key instruments. Procedures also are available for functional checks of many systems and components. Appendix B, Table B-1, lists the preventive maintenance procedures.

This page intentionally left blank.

5.0 REFERENCES

10 CFR 830.120, 2001, "Quality Assurance Requirements," Title 10, *Code of Federal Regulations*, Part 830.120, as amended.

10 CFR 830.3, "Nuclear Safety Management-Definitions," Title 10, *Code of Federal Regulations,* Part 830.3, as amended.

10 CFR 835, 2001, "Occupational Radiation Protection," Title 10, *Code of Federal Regulations*, Part 835, as amended.

29 CFR 1910, 1992, "Occupational Safety and Health Standards," Title 29, *Code of Federal Regulations*, as amended.

ACI 318, Revision varies, *Building Code Requirements for Reinforced Concrete,* American Concrete Institute, Farmington Hills, Michigan.

ANSI/FCI-70-2, *Control Valve Seat Leakage*, American National Standards Institute, New York, New York.

ANSI/ASME B31.3, *Process Piping*, American National Standards Institute/American Society of Mechanical Engineers, New York, New York.

ARH-205, 1967, *Design Criteria: PUREX AY Tank Farm*, Rev. 0, Atlantic Richfield Hanford Company, Richland, Washington.

ARH-1437, 1970, *Design Criteria: PUREX AZ Tank Farm*, Rev. 0, Atlantic Richfield Hanford Company, Richland, Washington.

ARH-CD-304, 1975, *Functional Design Criteria: Additional High-Level Waste Handling and Storage Facilities*, Rev. 1, Atlantic Richfield Hanford Company, Richland, Washington.

ARH-CD-362, 1975, *Functional Design Criteria: Additional High-Level Waste Storage Facilities*, Rev. 2, Atlantic Richfield Hanford Company, Richland, Washington.

ARH-CD-549, 1978, *Functional Design Criteria: Additional High-Level Waste Handling and Storage Facilities*, Rev. 1, Atlantic Richfield Hanford Company, Richland, Washington.

ASME B31.1, *Power Piping*, American Society of Mechanical Engineers, New York, New York.

ASTM A312, 2002, *Standard Specification for Seamless and Welded Austenitic Stainless Steel Pipes,* American Society for Testing and Materials, West Conshohocken, Pennsylvania.

B-102-C1, 1974, *Construction Specification for Salt Cake Storage Facility 241-A and 241-AX-Tank Farm Waste Routing Project B-102*, Rev. 1, Vitro Engineering Corporation, Richland, Washington.

B-120-C7, 1978, *Construction Specification for the 241-AW Tank Farm Completion Project B-120*, Rev. 1, Vitro Engineering Corporation, Richland, Washington.

B-130-C7, 1978, *Construction Specification for the 241-AN Tank Farm Completion Project B-130*, Rev. 1, Vitro Engineering Corporation, Richland, Washington.

B-131-C1, 1978, *Construction Specification for Terminal Liquor Transfer Facility for 241-AX, AY, and AZ Project B-131*, Rev. 1, Vitro Engineering Corporation, Richland, Washington.

B-133-C1, Date unknown, *Construction Specification for Waste Unloading Facility Building 204-AR*, Rev. 1, Vitro Engineering Corporation, Richland, Washington.

B-340-C7, 1984, *Construction Specification for the 241-AP Tank Farm Completion*, Rev. 1, Vitro Engineering Corporation, Richland, Washington.

CHG-0200593 R1, 2002, R. F. Wood (CHG) to J. S. O'Connor (DOE), "Contract Number DE-AC-27-99RL14047; Current Listings of Vital Safety Systems and Mission Critical Systems", March 14, 2002, CH2M HILL Hanford Group, Inc., Richland, Washington.

Clean Air Act, 1955, as amended, 42 USC 7401, et seq.

CPS-T-149-00012, *Criticality Prevention Specification for Tank Farm Operations,* RPP Tank Farms Operating Procedures, Criticality Prevention Specification, CH2M HILL Hanford Group, Inc., Richland, Washington.

DOE O 414.1A, 2001, *Quality Assurance*, U.S. Department of Energy, Washington, D.C.

DOE O 420.1, 2000, *Facility Safety*, U.S. Department of Energy, Washington, D.C.

DOE Order 5400.5, 1993, *Radiation Protection of the Public and the Environment*, U.S. Department of Energy, Washington, D.C.

DOE Order 5480.7A, 1993, *Fire Protection,* U.S. Department of Energy, Washington, D.C.

DOE Order 5480.11, 1988, *Radiation Protection for Occupational Workers*, U.S. Department of Energy, Washington, D.C.

DOE Order 5480.28, 1993, *Natural Phenomena Hazards Mitigation*, U.S. Department of Energy, Washington, D.C.

DOE Order 5820.2A, 1988, *Radioactive Waste Management,* U.S. Department of Energy, Washington, D.C.

DOE Order 6430.1A, 1989, *General Design Criteria*, U.S. Department of Energy, Washington, D.C.

DOE-STD-1020-94, *Natural Phenomena Hazards Design and Evaluation Criteria for Department of Energy Facilities*, U.S. Department of Energy, Washington, D.C.

DOE-STD-1021-93, *Natural Phenomena Hazards Performance Categorization Guidelines for Structures, Systems, and Components*, U.S. Department of Energy, Washington, D.C.

DOE-STD-1022-94, *Natural Phenomena Hazards Characterization Criteria*, U.S. Department of Energy, Washington, D.C.

DOE-STD-1023-95, *Natural Phenomena Hazards Assessment Criteri*a, U.S. Department of Energy, Washington, D.C.

DOE-STD-3009-94, *Preparation Guide for U.S. Department of Energy Nonreactor Nuclear Facility Safety Analysis Reports*, U.S. Department of Energy, Washington, D.C.

DOE-STD-3024-98, *Content of System Design Descriptions*, U.S. Department of Energy, Washington, D.C.

DOE/RL-92-36, *Hanford Site Hoisting and Rigging Manual*, U.S. Department of Energy, Richland Operations Office, Richland, Washington.

FDM-T-020-00002, 1985, *Waste Transfer and Routing Facilities Facility Description Manual*, Rev. A-1, Operating Documents Group Process Engineering Department Research and Engineering, Rockwell Hanford Operations, Richland, Washington.

FDM-T-200-00003, 1983, *Aging Waste Tank Facilities Description Manual*, Process Engineering Department Research and Engineering Function, Rockwell Hanford Operations, Richland, Washington.

FDM-T-290-00001, 1986, *204-AR Rail Car Unloading Facility Facility Description Manual*, Operating Documents Group Process Engineering Department Research and Engineering, Rockwell Hanford Operations, Richland, Washington.

GC-LOAD-01, 1996, *Design Load for Facilities*, ICF Kaiser Hanford Company, Richland, Washington.

Hanford Site Drawings

- H-2-69183, *Piping Plan 242-A Building Area*
- H-2-70398, Piping Plan 241-AW Tank Farm to 242-A Bldg
- H-2-70682, *Civil/Drawing Index Site Plan*
- H-2-70703, *Engineering Flow Diagram*
- H-2-70704, *Piping Plans and Elevations*
- H-2-70760, *Engineering Flow Diagram Valve Pits to 241-AX AY & AZ Tanks*
- H-2-70763, *Piping Plan 241-AZ-A to 241-AZ, 241-AX-B to 241-AY*
- H-2-71503, *Piping Plans*(204-AR)
- H-2-71504, *Piping Plans & Sections* (204-AR)

- H-2-71505, *Piping Plans Sections & Details* (204-AR)
- H-2-71986, *Piping Plan 241-AN Tank Farm*
- H-2-822320, *Jumper Arrangement Lift Station 244-A*
- H-2-90454, *Structural Typical Details*
- H-2-90543, *Piping Plan #1 241-AW Tank Farm*
- H-14-104175, *Waste Transfer Piping Diagram 200 East Area*
- H-14-022201, *Caustic Addition Project O&M System P&ID*
- H-14-020801, *Waste Transfer System (WT) O&M System P&ID*
- H-14-020802, *Waste Transfer System (WT) O&M System P&ID*
- H-14-020803, *Waste Transfer System (WT) O&M System P&ID*, Hanford Site drawing.
- H-14-020806, *Waste Transfer System (WT) O&M System P&ID*
- H-14-020807, *Waste Transfer System WT O&M System P&ID*

HNF-2004, 1998, *Estimated Dose to In-Plant Equipment: Phase 1 Waste Feed Delivery*, Numatec Hanford Corporation, Richland, Washington.

HNF-3395, 2002, *Interface Control Document Between the Double-Shell Tanks (DST) System and the 242-A Evaporator Facility*, Rev. 1, CH2M HILL Hanford Group, Inc., Richland, Washington.

HNF-4155, 2001, *Double-Shell Tank Monitor and Control Subsystem Specification*, Rev. 1B, CH2M HILL Hanford Group, Inc., Richland, Washington.

HNF-4157, 2001, *Double-Shell Tank Utilities Specification*, Rev. 1B, CH2M HILL Hanford Group, Inc., Richland, Washington.

HNF-4159, 2000, *Double-Shell Tank Maintenance and Recovery Subsystem Specification*, Rev. 0, CH2M HILL Hanford Group, Inc., Richland, Washington.

HNF-4160, 2002, *Double-Shell Tank Valving Subsystem Specification*, Rev. 2, CH2M HILL Hanford Group, Inc., Richland, Washington.

HNF-4161, 2002, *Double-Shell Tank Transfer Piping Subsystem Specification*, Rev. 2, CH2M HILL Hanford Group, Inc., Richland, Washington.

HNF-4162, 2002, *Double-Shell Tank Transfer Pump Subsystem Specification*, Rev. 2, CH2M HILL Hanford Group, Inc., Richland, Washington.

HNF-IP-0842, 2001, *RPP Administration*, CH2M HILL Hanford Group, Inc., Richland, Washington.

HNF-SD-GN-ER-501, 2001, *Natural Phenomena Hazards, Hanford Site, Washington*, Rev. 1A, CH2M HILL Hanford Group, Inc., Richland, Washington.

HNF-SD-WM-TSR-006, 2001, *Tank Farms Technical Safety Requirements*, Rev. 2-G, CH2M HILL Hanford Group, Inc., Richland, Washington.

HNF-SD-WM-TRD-007, 2002, *System Specification for the Double-Shell Tank System*, Rev. 2, CH2M HILL Hanford Group, Inc., Richland, Washington.

HS-BS-0084, 1995, *Jumper Fabrication*, Rev. C, Westinghouse Hanford Company, Richland, Washington.

National Environmental Policy Act of 1969, 42 USC 4321, et seq.

NFPA 70, Revision varies, *National Electrical Code*, National Fire Protection Association, Quincy, Massachusetts.

OSD-T-151-0007 I0, *Operation Specifications for the Double-Shell Storage Tanks,* CH2M HILL Hanford Group, Inc., Richland, Washington.

OSD-T-151-00015 C3, *Operating Specification for Miscellaneous Facilities*, CH2M HILL Hanford Group, Inc., Richland, Washington.

Resource Conservation and Recovery Act of 1976, 42 USC 6901, et seq.

RPP-5346, 2000, *Waste Feed Delivery Transfer System Analysis,* CH2M Hill Hanford Group, Inc., Richland, Washington.

RPP-7984, 2001, *Project Definition Criteria for tanks 241-AN-102 and AN-107 Caustic Addition Project,* CH2M HILL Hanford Group, Inc., Richland, Washington.

RPP-8195, 2001, *Tank 241-AN-102 Caustic Addition Project System Design Description,* CH2M HILL Hanford Group, Inc., Richland, Washington.

RPP-8549, 2001, *Radiological Design Review Screening 241-A-B Valve Pit Steel Cover Plate,* CH2M HILL Hanford Group, Inc., Richland, Washington.

RPP-8656, 2001, *Design Review Report 241-A-B Valve Pit Manifold Jumper Assembly (H-14-104770) Safety-Significant Valves.*

RPP-9438, 2002, *System Design Description for Waste Tank Addition Project by Tanker Truck,* CH2M HILL, Hanford Group, Inc., Richland, Washington.

RPP-9771, 2002, *Tank 241-AN-107 Caustic Addition Project System Design Description*, Rev. 0, CH2M HILL Hanford Group, Inc., Richland, Washington.

RPP-11801, 2002, *Analysis of Record Summary for Double-Shell Tanks*, Rev. 0, CH2MHILL Hanford Group, Inc., Richland, Washington.

RPP-11803, 2002, *Analysis of Record Summary for DCRTs, Catch Tanks, and IMUSTs*, Rev. 0, CH2MHILL Hanford Group, Inc., Richland, Washington.

RPP-13033, 2003, *Tank Farms Documented Safety Analysis*, CH2M HILL Hanford Group, Inc., Richland Washington.

RPP-13909, 2003, *Transfer Leak Detection Alarm Activation Percent Volume Level Calculation*, Rev. 0, CH2M HILL Hanford Group, Inc., Richland, Washington.

RPP-15135, 2003, *System Design Description for AY/AZ Tank Farm Double-Shell Tank Waste Storage System,* CH2M Hill Hanford Group, Inc., Richland, Washington.

RPP-15136, 2003, *System Design Description for the Replacement Cross-Site Transfer System Between 200 West and 200 East Tank Farms,* CH2M HILL Hanford Group, Inc., Richland, Washington.

RPP-POL-CRIT-SFT, *Nuclear Criticality Safety Policy,* CH2M HILL Hanford Group, Inc., Richland, Washington.

RPP-POL-QA, *Quality Assurance Policy,* CH2M HILL Hanford Group, Inc., Richland, Washington.

RPP-MP-600, *Quality Assurance Program Description*, CH2M HILL Hanford Group, Inc., Richland, Washington.

RPP-QAPP-008, *River Protection Project Quality Assurance Program Plan*, CH2M HILL Hanford Group, Inc., Richland, Washington.

SD-340-FDC-001, 1982, *Functional Design Criteria: Project B-340, 241-AP Tank Farm*, Rockwell Hanford Operations, Richland, Washington.

SD-RE-DG5-002, 1991, *Jumper Design Standard,* PUREX Design Services, Richland, Washington.

SD-WM-RPT-025, 1992, *Tank Farms Pumping Equipment List*, Rev. 1, Westinghouse Hanford Company, Richland, Washington.

SDC-4.1, 1993, ,"*Design Load,*" Hanford Plant Standards, CH2M HILL, Hanford Group, Inc., Richland, Washington.

Tank Farm Safety Equipment List , at http://apweb05.rl.gov/rapidweb/chg/SEL/sel/selection.cfm.

TF-FT-279-006, *Perform Functional Test for AP Farm Transfer Leak Detectors*, CH2M HILL Hanford Group, Inc., Richland, Washington.

TFC-BSM-TQ-STD-02, *Operations Management Qualification Requirements*, CH2M HILL Hanford Group, Inc., Richland, Washington.

TFC-ENG-CHEM-P-02, *Criticality Safety Inspections and Assessments*, CH2M HILL Hanford Group, Inc., Richland, Washington.

TFC-ENG-CHEM-P-04, *Criticality Safety Evaluations*, CH2M HILL Hanford Group, Inc., Richland, Washington.

TFC-ENG-SB-C-01, *Safety Basis Issuance and Maintenance*, CH2M HILL Hanford Group, Inc., Richland, Washington.

TFC-ENG-SB-C-06, *Safety Basis Development*, CH2M HILL Hanford Group, Inc., Richland, Washington.

TFC-OPS-MTS-C01, *Maintenance and Operations Procedures Tank Farm Contractor Work Control*, CH2M HILL Hanford Group, Inc., Richland, Washington.

TFC-PLN-03, *Engineering Program Management Plan*, CH2M HILL Hanford Group, Inc., Richland, Washington.

Toxic Substances Control Act of 1976, 15 USC 2601, et seq.

W314-C-054, *AW Valve Pits Structural Evaluation,* CH2M HILL Hanford Group, Inc. Richland, Washington.

W314-C-092, *AW Pits Lifting Bail Investigation,* CH2M HILL Hanford Group, Inc. Richland, Washington

W314-P-006, *Inside Pit & Buried Pipeline Heat Loss Calculation,* CH2M HILL Hanford Group, Inc., Richland, Washington.

W314-P-064, *Pipe Jumper Stress Analysis 241-AW-A&B Valve Pits,* CH2M HILL Hanford Group, Inc., Richland, Washington.

W314-P-066, *Shielding Analysis 241-AW-A&B Valve Pits,* CH2M HILL Hanford Group, Inc., Richland, Washington.

W314-P-070, *Lifting Bail Structural Analysis*, CH2M HILL Hanford Group, Inc., Richland, Washington.

WAC 173-303, "Dangerous Waste Regulations," *Washington Administrative Code*, as amended, Washington State Department of Ecology, Olympia, Washington.

WAC 246-290, "Public Water Supplies," *Washington Administrative Code*, as amended, Washington State Department of Ecology, Olympia, Washington.

WHC-CM-4-9, Obsolete, *Radiological Design Manual*, Westinghouse Hanford Company, Richland, Washington.

WHC-SD-RE-DGS-002, 1991, *Jumper Design Standard*, Rev. 3, Westinghouse Hanford Company, Richland, Washington.

This page intentionally left blank.

APPENDIX A

DRAWINGS AND DOCUMENTS NECESSARY TO MAINTAIN CONFIGURATION CONTROL OF DESIGN BASELINE

This page intentionally left blank.

APPENDIX A

DRAWINGS AND DOCUMENTS NECESSARY TO MAINTAIN CONFIGURATION CONTROL OF DESIGN BASELINE

Tables A-1, A-2, and A-3 list drawings relevant to the design baseline of the 200 East Area DST WTS. Table A-1 lists several key drawings that define the 200 East Area DST WTS. Table A-2 lists additional drawings that are key to the 200 East Area DST WTS, however the drawings A-2 are also important to other systems besides the 200 East Area DST WTS. Table A-3 lists the drawings that make up the remainder of the design baseline. These documents must be maintained under configuration control. Any changes to these documents must be approved by the Design Authority responsible for the system. Drawings may be accessed via RILS, RIM Information Locator System (RILS) and EDMS, Engineering Drawing Management System (EDMS).

Table A-1. 200E DST WTS Design-Basis Documents.
(3 sheets)

Drawing number	Sheets	Description
241-AP		
H-14-020803	1	*Waste Transfer System (WT) O&M System P&ID*
H-14-020803	2	*Waste Transfer System (WT) O&M System P&ID*
H-14-020803	3	*Waste Transfer System (WT) O&M System P&ID*
H-14-020803	4	*Waste Transfer System (WT) O&M System P&ID*
H-14-020803	5	*Waste Transfer System (WT) O&M System P&ID*
241-AW		
H-14-020802	1	*Waste Transfer System WT O&M System P&ID*
H-14-020802	2	*Waste Transfer System (WT) O&M System P&ID*
H-14-020802	3	*Waste Transfer System WT O&M System P&ID*
H-14-020802	4	*Waste Transfer System WT O&M System P&ID*
H-14-020802	5	*Waste Transfer System (WT) O&M System P&ID*
H-14-020802	6	*Waste Transfer System (WT) O&M System P&ID*
241-AN		
H-2-72010	2	*Jumpers Arrangement Central Pump Pit, 241-AN-01A Thru 07A*
H-2-85573	1-32	*Electrical Caustic Addition Project*
H-14-020801	1	*Waste Transfer System – WT – O&M System P&ID*
H-14-020801	2	*Waste Transfer System – WT – O&M System P&ID*
H-14-020801	3	*Waste Transfer System – WT – O&M System P&ID*
H-14-020801	4	*Waste Transfer System (WT) O&M System P&ID*
H-14-020801	5	*Waste Transfer System (WT) O&M System P&ID*
H-14-020801	6	*Waste Transfer System (WT) O&M System P&ID*
H-14-103979	2	*Caustic Transfer Pump Arrangement*
H-14-022201	4	*Caustic addition skid tank AN-107 (CHEMB) O&M System P&ID*

Table A-1. 200E DST WTS Design-Basis Documents.
(3 sheets)

Drawing number	Sheets	Description
H-14-020324	1	*Waste Tank Chemical Addition O&M Service Air P&ID*
H-14-021824	1	*Waste Tank Chemical Addition O&M Water Flush P&ID*
H-14-22224	2	*Waste Tank Chemical Addition O&M P&ID*
A-Complex		
H-2-64400	5	*IEFD AY Tank Farm*
H-2-70387	2	*IEFD, Drainage Lift Station*
H-2-73749	1	*Engineering Flow Diagram 241-A & AX TK Farms*
H-2-90370	1	*Engr Flow Diag Waste Transfer*
H-2-90370	2	*Engr Flow Diag Waste Transfer*
H-14-020806	1	*Waste Transfer System WT O & M System P & ID*
H-14-020806	2	*Waste Transfer System WT O & M System P & ID*
H-14-020806	3	*Waste Transfer System WT O & M System P & ID*
H-14-020806	4	*Waste Transfer System WT O & M System P & ID*
H-14-020806	5	*Waste Transfer System WT O & M System P & ID*
H-14-020806	6	*Waste Transfer System WT O & M System P & ID*
H-14-020807	1	*Waste Transfer System WT O & M System P & ID*
H-14-020807	2	*Waste Transfer System WT O & M System P & ID*
H-14-020807	3	*Waste Transfer System WT O & M System P & ID*
H-14-020807	4	*Waste Transfer System WT O & M System P & ID*
H-14-020808	1	*Waste Transfer System WT O & M System P & ID*
H-14-020808	2	*Waste Transfer System WT O & M System P & ID*
H-14-020808	3	*Waste Transfer System WT O & M System P & ID*
H-14-020808	4	*Waste Transfer System WT O & M System P & ID*
H-14-020809	1	*Waste Transfer System WT O & M System P & ID*
H-14-020809	2	*Waste Transfer System WT O & M System P & ID*
H-14-020809	3	*Waste Transfer System WT O & M System P & ID*
H-14-104770	4	*Header Assembly & Details Valve Pit 241-A-B*
General		
H-14-022201	4	*Caustic addition skid tank AN-107 (CHEMB) O&M System P&ID*
H-14-020324	1	*Waste Tank Chemical Addition O&M Service Air P&ID*
H-14-021824	1	*Waste Tank Chemical Addition O&M Water Flush P&ID*
H-14-022224	2	*Waste Tank Chemical Addition O&M P&ID*
H-14-104175	1	*Waste Transfer Piping Diagram 200 East Area*
Other		
RPP-7984		*Project Definition Criteria for Tanks 241-AN-102 and AN-107 Caustic Addition Project*
RPP-8157		*AN-102 Caustic Addition (Calculations)*
RPP-8195		*Tank 241-AN-102 Caustic Addition Project System Design Description*

Table A-1. 200E DST WTS Design-Basis Documents.
(3 sheets)

Drawing number	Sheets	Description
RPP-8549		*Radiological Design Review Screening 241-A-B Valve Pit Steel Cover Plate*
RPP-8656		*Design Review Report: A-B Valve Pit Jumper*
RPP-9427		*Calculation Notes for Tank 241-AN-107 Caustic Addition Project*
RPP-9438	1	*System Design Description for Waste Tank Chemical Addition by Tanker Truck*
RPP-9771	1	*Tank 241-AN-107 Caustic Addition Project System Design Description*
RPP-8195		*Tank 241-AN-102 Caustic Addition Project System Design Description*
RPP-9438,		*System Design Description (SDD) for Waste Tank Chemical Addition by Tanker Truck*
RPP-6012	R1	*Project W314 phase 1 AY Upgrades Authorization for Beneficial Use*
EDT-635882	NA	*List of Design Calculations for Project W314 241-AY phase 1 Upgrades*
RPP-6158	R1	*Project W314 phase 1 AZ Upgrades Authorization for Beneficial Use*
EDT-635867	NA	*List of Design Calculations for ProjectW314 241- AZ phase 1 Upgrades*
RPP-6419	R2	*Project W314, Tank Farm Restoration and Safe Operations, Phase 1 AW Tank Farm Upgrades Authorization for Beneficial Use (AW-A valve pit)*
HNF-SD-W314-ABU-002	R2A	*Project W314 241-AN-A Valve Pit Upgrade Authorization for Beneficial Use*
HNF-SD-W314-ABU-003	R2A	*Project W314 241-AN-B Valve Pit Upgrade Authorization for Beneficial Use*

Table A-2. 200E DST WTS Documents Shared with Other Systems.
(2 sheets)

Drawing number	Sheets	Description
241-AP		
H-14-030003	1	*Electrical EDS One Line Diagram*
H-14-030003	2	*Electrical EDS One Line Diagram*
H-14-030003	3	*Electrical EDS One Line Diagram*
H-14-030003	4	*Electrical EDS One Line Diagram*
241-AW		
H-14-030002	1	*Electrical EDS One Line Diagram*
H-14-030002	2	*Electrical EDS One Line Diagram*
H-14-030002	3	*Electrical EDS One Line Diagram*
241-AN		
H-14-030001	1	*Electrical (EDS) One Line Diagram*
H-14-030001	2	*Electrical (EDS) One Line Diagram*
H-14-030001	3	*Electrical (EDS) One Line Diagram*
H-14-030001	4	*Electrical (EDS) One Line Diagram*

Table A-2. 200E DST WTS Documents Shared with Other Systems.
(2 sheets)

Drawing number	Sheets	Description
A-Complex		
H-14-030006	1	*Electrical (EDS) One Line Diagram*
H-14-030007	1	*Electrical (EDS) One Line Diagram*
H-14-030007	2	*Electrical (EDS) One Line Diagram*
H-14-030007	3	*Electrical (EDS) One Line Diagram*
H-14-030007	4	*Electrical (EDS) One Line Diagram*
H-14-030007	5	*Electrical (EDS) One Line Diagram*
H-14-030008	1	*Electrical (EDS) One Line Diagram*
H-14-030008	2	*Electrical (EDS) One Line Diagram*
H-14-030008	3	*Electrical (EDS) One Line Diagram*
H-14-030008	4	*Electrical (EDS) One Line Diagram*
H-14-030008	5	*Electrical (EDS) One Line Diagram*
H-14-030009	1	*Electrical (EDS) One Line Diagram*
HNF-SD-WM-ER-736		*Intrinsically Safe Leak Detector Circuit Description*
244-A Lift Station		
H-14-020804	1	*Waste Transfer System (WT) O&M P&ID*

Table A-3. 200E DST WTS Design-Baseline Documents.
(6 sheets)

Drawing number	Sheets	Description
241-AP		
H-2-76473	1	*Piping Plan & Section, 241-AP-02D Pump Pit*
H-2-77451	1	*Piping Plan, Mixer Pump Pit, 241-AP-07D, 07E, 08D & 08E*
H-2-77452	1	*Piping Plan, Mixer Pump Pit, 241-AP-07F & 08F*
H-2-90476	2-8,10-12, 15, 16	*Electrical Elementary Diagram Leak enclosure and assembly*
H-2-90479	1-10	*Electrical Elementary Diagrams*
H-2-90488	2	*IEFD Miscellaneous Diagrams*
H-2-90544	1	*Piping Plan, #2 Waste Transfer Lines*
H-2-90545	1-3	*Piping Plan, #3*
H-2-90546	1	*Piping Plan, #4*
H-2-90547	1-2	*Piping Plan, #5*
H-2-90548	1	*Piping Plan, #6*
H-2-90551	1-2	*Piping Plan, 241-AP Valve Pit*
H-2-90553	1	*Piping Plan, Tank 101*
H-2-90554	1	*Piping Plan, Tank 102*

Table A-3. 200E DST WTS Design-Baseline Documents.
(6 sheets)

Drawing number	Sheets	Description
H-2-90555	1	*Piping Plan, Tank 103*
H-2-90556	1	*Piping Plan, Tank 104*
H-2-90557	1	*Piping Plan, Tank 105*
H-2-90558	1	*Piping Plan, Tank 106*
H-2-90559	1	*Piping Plan, Tank 107*
H-2-90560	1	*Piping Plan, Tank 108*
H-2-90562	1	*Piping Plan, Central Pump Pit, 241-AP-01A Thru 08A*
H-2-90563	1	*Piping Sect. & Details, Central Pump Pit, 241-AP-01A Thru 08A*
H-2-90566	1	*Piping Plan, Leak Detection Pit, 241-AP-03C & 05C*
H-2-90567	1	*Piping Sect. & Details, Leak Detection Pit, 241-AP-03C & 05C*
H-2-90596	1	*Pit & Pit Cover Painting Diagrams*
H-2-90597	1	*Pit & Pit Cover Painting Diagrams*
241-AW		
H-2-70331	1	*Electrical Elementary Diagrams*
H-2-70325	1-5	*Electrical Power And Control Elementary Diagrams*
H-2-70329	1-3	*Electrical Leak Detection Elementary Diagrams*
H-2-70331	1	*Electrical Diagrams*
H-2-70398	1-2	*Piping Plan, 241-AW Tank Farm To 242-A BLDG.*
H-2-70399	1	*Piping Plan, 241-AW Tank Farm*
H-2-70400	1	*Piping Plan, 241-AW Tank Farm*
H-2-70401	1	*Piping Plan, Valve Pits 241-AW-A & B*
H-2-70403	1	*Piping Plan, Tank 101*
H-2-70404	1	*Piping Plan, Tank 102*
H-2-70405	1	*Piping Plan, Tank 103*
H-2-70406	1	*Piping Plan, Tank 104*
H-2-70407	1	*Piping Plan, Tank 105*
H-2-70408	1	*Piping Plan, Tank 106*
H-2-70411	1-2	*Piping Plan, Central Pump Pit 241-AW-01A Thru 06A*
H-2-70414	1	*Piping Plan & Details, Drain Pit 241-AW-02D*
H-2-70415	1	*Piping Plan & Details, Feed Pump Pit 241-AW-02E*
H-2-90276	1	*Electrical Elementary Diagrams*
241-AN		
H-2-71116	1	*Electrical Power, Instrument Heat Trace & Leak Detection Plans*
H-2-71116	2	*Electrical Power, Instr Heat Trace & Leak Detection Plans*
H-2-71913	3	*Structural Cover Blocks 241-AN-A Plan And Details*
H-2-71913	4	*Structural Cover Blocks 241-AN-B Plan And Details*
H-2-71913	5	*Structural Cover Blocks 241-AN-A, B Sections And Details*

Table A-3. 200E DST WTS Design-Baseline Documents.
(6 sheets)

Drawing number	Sheets	Description
H-2-71913	6	*Structural Cover Block Sections And Details*
H-2-71913	7	*Structural Pits 241-AN-A, B Plans & Details*
H-2-71913	8	*Structural Pits 241-AN-A,B Shielding Collar Details*
H-2-71913	9	*Structural Pits 241-AN-A, B Details*
H-2-71925	9	*Electrical Installation Details Valve Pit 241-AN-A*
H-2-71925	10	*Electrical Installation Details Valve Pit 241-AN-B*
H-2-71925	11	*Electrical Installation Details Valve Pit 241-AN--A & 241-AN-B*
H-2-71927	1-4	*Electrical Power And Control Elementary Diagrams*
H-2-71930	1	*Electrical Leak Detection Plans & Details*
H-2-71931	1	*Electrical Leak Detection Elementary Diagrams*
H-2-71931	2	*Electrical Leak Detection Elementary Diagrams*
H-2-71931	3	*Electrical Leak Detection Elementary Diagrams*
H-2-71933	1	*Electrical Instrument Elementary Diagram*
H-2-71986	1	*Piping Plan, 241-AN Tank Farm*
H-2-71987	1-2	*Piping Plan, 241-AN Tank Farm*
H-2-71989	1	*Piping Plan, Valve Pits, 241-AN/A & B*
H-2-71990	1	*Section & Details, Valve Pits, 241-AN/A & B*
H-2-71991	1	*Piping Plan, Tank 101*
H-2-71992	1	*Piping Plan, Tank 102*
H-2-71993	1	*Piping Plan, Tank 103*
H-2-71994	1	*Piping Plan, Tank 104*
H-2-71995	1-2	*Piping Plan, Tank 105*
H-2-71996	1	*Piping Plan, Tank 106*
H-2-71998	1	*Piping Plan, Central Pump Pit, 01A-17A*
H-2-72008	1	*Pit & Pit Cover Painting Diagrams 241-AN Tank Farm*
H-2-72008	2	*Pit Cover Painting Diagram 241-AN-A*
H-2-72008	3	*Pit Cover Painting Diagram 241-AN-B*
H-2-72009	1	*Jumper Arrangement Valve Pit 241-AN-A*
H-2-72009	3	*Jumper Arrangement Valve Pit 241-AN-B*
H-2-72038	1	*Piping Plan, 241-AN Tank Farm*
H-2-72039	1	*Piping Plan, Tank 107*
H-2-73833	2	*Electrical Ht Tr, Leak Det & Ann Elem Diag-System 5*
H-2-73848	1	*Piping Plan, 241-AN-01D & 01E*
H-2-76608	1	*Piping Plan, Section & Details, 241-AN Service Pit Mod.*
241-AY/AZ		
H-2-55086	2-4	*Eng. Flow Diagrams, Outside Waste Lines Of PUREX Facility*
H-2-64313	1	*Structural Concrete Pump Pit Plans & Sections*

Table A-3. 200E DST WTS Design-Baseline Documents.
(6 sheets)

Drawing number	Sheets	Description
H-2-64313	2	*STRL 241-AY-02A Pump Pit Mod Plan, Section & Detail*
H-2-64313	3	*STRL 241-AY-02A Pump Pit Mod Plan, Section & Elev*
H-2-64313	4	*STRL 241-AY-02A Pump Pit Mod Plans, Sections & Elev*
H-2-64313	5	*Piping Pump Pit AY-02A Plan, Sections & Detail*
H-2-64314	1	*Structural Concrete Sluicing Pit Plans & Sections*
H-2-64314	2	*Structural 241-AY-02E Sluice Pit Mod Plan, Sect, & Details*
H-2-64314	6	*Piping Sluice Pit 241-AY-02E Plan Sections*
H-2-64405	1	*Piping Plan TK-101-AY 241-AY Tank Farm*
H-2-64406	1	*Piping Plan TK-102 241AY Tank Farm*
H-2-69162	1	*Electrical Leak Detection And Miscellaneous Diag*
H-2-69162	2	*Electrical Leak Detection And Miscellaneous Diag*
H-2-70796	1	*Electrical Details And Elementary Diagrams*
H-2-70796	2	*Electrical Details And Elementary Diagrams*
H-2-70796	3	*Assembly Leak Detector Relay Cabinet RC-AY-1*
H-2-70796	4	*Assembly Leak Detector Relay Cabinet RC-AZ-1*
H-2-70796	5	*Assembly Leak Detector Relay Cabinets*
H-2-70796	6	*Connection Diagram Leak Detector Relay Cabinet RC-AY-1*
H-2-70796	7	*Connection Diagram Leak Detection Relay Cabinet RC-AZ-1*
H-2-74600	3	*Leak Detection System Electrical Diagrams*
H-2-74600	4	*AY & AZ Tank Farm Pump Shutdown Control Diagrams*
H-2-76518	1-2	*Electrical Elementary Diagram*
H-2-76578	2	*Electrical Elementary Diagram*
H-2-818486	1	*Piping Painting Diagrams Pits 241-AY-02A & 241-AY-02E*
H-2-818501	2	*Jumper Assembly Pump Pit AY-02A-U11-A C*
H-2-818537	1	*Piping Distributor Assembly Plan, Elevation & Details*
H-2-818537	2	*Piping Distributor Assembly Plan, Elevation & Details*
H-2-818540	2	*Piping Tank 241-AY-102 Details*
H-2-818540	3	*Piping Tank 241-AY-102 Sections & Details*
H-2-818540	5	*Piping Tank 241-AY-102 Sections & Details*
H-2-818540	6	*Piping Tank 241-AY-102 Sections & Details*
H-2-818540	7	*Piping Tank 241-AY-102 Sections & Details*
H-2-818544	1	*Piping Jumper Arrangement Pump Pit AY-02A*
H-2-818544	2	*Piping Jumper Arrangement Pump Pit AY-02A*
H-2-818545	1	*Piping Jumper Arrangement Sluice Pit AY-02E*
H-2-818708	1	*Electrical Cathodic Protection Plan #3*
H-2-818708	2	*Electrical Cathodic Protection Details*
H-2-98352	1	*Piping Plan General Arrangement 241-AZ Tank Farm*

Table A-3. 200E DST WTS Design-Baseline Documents.
(6 sheets)

Drawing number	Sheets	Description
H-2-68353	1	*Piping Plan Tank 102*
H-2-68413	1	*Piping Plan Tank 101*
H-2-81574	1	*Piping 241-AZ Tank Farm Mod Plan*
H-2-81574	2-3	*Piping 241-AZ Tank Farm Mod Plan And Details*
H-2-818434	1	*Civil 241-AY-102 Transfer System Plan & Profile*
H-2-818503	1	*Sluice Pit AY-02E-U--2(R-1D)-B-A*
H-2-818504	1-2	*Jumper Assembly Pump Pit AY-02A-U3-U11-B*
H-2-818532	1-2	*Piping Support Details*
H-2-818541	1	*Piping Tank 241-AY-102 Section 7 Plan*
H-2-818547	1	*Piping Transfer Line Support "AY" Farm*
H-2-90429	2	*Electrical Elementary Diagram*
H-2-91092	1	*Jumper Arrgt, Heat Tracing, Valve Pit, 241-AX-A & 241-AX-B*
H-2-93206	3	*Electrical, Valve Pit, 241-A-A Jumper Valve Positions*
H-2-94028	1	*Electrical Engineering Flow Diagram*
H-2-99029	2	*Electrical Elementary Diagram*
W-314-C3		*Construction Specification for AY Tank Farm to 200E Waste Transfer System*
241-A/AX		
H-2-38068	2	*Leak Detection System*
H-2-56813	2	*Leak Detection System*
H-2-68165	2	*Leak Detection System*
H-2-69159	1	*Electrical Control Diagrams*
H-2-73749	1	*Engineering Flow Diagram 241-A & AX TK Farm*
200 East		
H-2-38211	1	*Electrical Control Diagrams*
H-2-90393	1	*Electrical Engineering Flow Diagram*
H-2-90394	2	*Elec/Instm Elementary Diagrams*
H-2-90398	1	*Electrical Engineering Flow Diagram*
242-A		
H-2-99085	SH 5-9, 13-16,21	*Electrical Elementary Diagrams*
General		
H-2-34965	4-7	*Leak Detector Assembly Typical Details*
Other		
H-2-70760	1	*Engineering Flow Diagram Valve Pits to 241-AX AY & AZ Tanks*
HNF-5183		*Tank Farms Radiological Control Instruments, CH2M Hill, Richland, WA*
HNF-SD-WM-HSP-002		*Tank Farms Health and Safety Plan, CH2M Hill, Richland, WA*

Table A-3. 200E DST WTS Design-Baseline Documents.
(6 sheets)

Drawing number	Sheets	Description
RPP-5779		*Radiological Control Instruments, CH2M Hill, Richland, WA*

Table A-4. 200E WTS Transfer Piping Design Pressures/Temperatures.

Pipe Material	Pipe Type	Design Pressure PSIG	Design Temperature °F	Encasement rating	*Reference Document*
241-AN Tank Farm					
Carbon Steel	SL	400	340	60 PSIG @ 340 °F	*B-130-C3 Spec*
Carbon Steel	SN	275	340	60 PSIG @ 340 °F	*B-130-C3 Spec*
241-AP Tank Farm					
Carbon Steel	2"-SN-621	275	200	60 PSIG @ 200 °F	*B-340-C7 Spec*
Carbon Steel	SL	400	340	60 PSIG @ 340 °F	*B-340-C7 Spec*
Carbon Steel	SN	400	340	60 PSIG @ 340 °F	*B-340-C7 Spec*
241-AW Tank Farm					
Carbon Steel	SL	400	340	60 PSIG @ 340 °F	*B-120-C7 Spec*
Carbon Steel	SN	275	340	60 PSIG @ 340 °F	*B-120-C7 Spec*
241-AZ Tank Farm					
Stainless Steel	Process Waste	275	220	No Encasement Called out	*HWS-8867*
241-A and 241-AX Tank Farms					
Carbon Steel	SL	375	330	60 PSIG @ 200 °F	*B-102-C1 Spec*
Carbon Steel	SN	230	330	60 PSIG @ 200 °F	*B-102-C1 Spec*
241-AZ-101 Tank Addition					
Stainless Steel	Process Waste	275	250	Carbon Steel 60 PSIG @ 200 °F	*B-109-C1 Spec*
241-A and 241-AX Tank Farm					
Carbon Steel	SL	375	330	60 PSIG @ 200 °F	*B-102-C1 Spec*
Carbon Steel	SN	230	330	60 PSIG @ 200 °F	*B-102-C1 Spec*
241-AX, AY and AZ					
Carbon Steel	SN	400	340	60 PSIG @ 340 °F	*B-131-C1 Spec*
Carbon Steel	SL	400	340	60 PSIG @ 340 °F	*B-131-C1 Spec*
204-AR Unloading Facility					
3" LIQW-702-M8	Liquid waste	120	100	60 PSIG @ 100 F (M-26a)	*B-133-C1 Spec*

This page intentionally left blank.

APPENDIX B

SYSTEM PROCEDURES

This page intentionally left blank.

APPENDIX B

SYSTEM PROCEDURES

Generally operating procedures for the 200 East Area DST WTS are not reused; instead new procedures are developed each time a transfer occurs. These transfer-specific operating procedures can be accessed at http://aptfpg02.rl.gov/ Technical Procedures/Tank Farm Operating.html. Few preventive maintenance procedures are associated with waste transfer systems. Table B-1 is for information only; it is in no way complete, nor should be treated as such. For a complete list of current procedures refer to http://aptgpg02.rl.gov/ on the Hanford Site intranet. These procedures may change at any time.

Table B-1. Procedures for the 200 East Area DST Waste Transfer System.

Procedure Number	Procedure Title
3-CATH-357	*Cathodic-Protection System Testing*
3-CATH-357ET	*Cathodic Protection System Testing East Tanks*
3-LDD-042	*Testing of Liquid Detector*
3-LDD-055	*Trouble shooting and repair of Liquid Detector*
3-MISC-126	*Tank Farms Weekly Check of Heater and Heat Trace*
3-MISC-363	*Winterization/De-Winterization Tank Farms*
6-LCD-476	*Calibrate Omega Model TX-83, A-350 Weight Factor and Specific Gravity*
6-LDD-275	*Calibrate the Diversion Box and Vent Station Sump Pump Leak Detection Elements*
6-PCD-269	*Honeywell Pneumatic Differential Pressure Transmitter*
6-PCD-508	*Calibrate Pressure Switches*
6-PCD-509	*Pressure and Vacuum Gauges Calibration*
7-LDD-483	*Bench Test Intrinsically Safe Leak Detector Relays B/W 5300 Series*
7-MISC-548	*Inspection and Hydrostatic Test of Caustic Addition Chemical and Water hoses*
ARP-T-211	*A Farm Alarm Response*
ARP-T-221	*AN Farm Alarm Response*
ARP-T-231	*AW Farm Alarm Response*
ARP-T-251	*AY/AZ Farm Alarm Response*
ARP-T-261	*AZ Farm Alarm Response*
ARP-T-271	*AP Farm Alarm Response*
ARP-T-281	*244-A Farm Alarm Response*
ARP-T-291	*204-AR Farm Alarm Response*
ATP-001-001	*Acceptance Test Emergency Pumping Pump*
CPS-T-149-00012	*Criticality Prevention Specification for Tank Farms Operations*
OSD-T-151-00007	*Operating Specification for the D-Shell Tanks*
OSD-T-151-00008	*Operating Specification for the 204-AR-Waste Unloading Facility*
ODD-T-151-00010	*Operating Specification for Pressure Testing & Leak Detection for Tank Farm Transfer Systems & Use of Temporary Transfer Lines*
OSD-T-151-00011	*Operating Specification for the Active Double-Contained Receiver Tanks*

Table B-1. Procedures for the 200 East Area DST Waste Transfer System.

Procedure Number	Procedure Title
OSD-T-151-00015	*Operating Specification for Miscellaneous Facilities*
OSD-T-151-00031	*Operating Specification for Tank Farm Leak Detection and Single Shell Tank Intrusion Detection*
OTP-220-0004	*Operational Test Procedure for 241-AN-102 Transfer Pump System*
OTP-314-001	*241-AN-A Valve Pit Modification Operational Test Procedure*
OTP-314-002	*241-AN-B Valve Pit Modification Operational Test Procedure*
OTP-314-003	*241-AY-01 Pit Leak Detector Operational Test Procedure*
OTP-314-004	*241-AN-A Pit Leak Detector Operational Test Procedure*
OTP-314-005	*241-AY SN-635Encasement Leak Detector Operational Test Procedure*
OTP-314-006	*241-AZ 01A Pit Leak Detector Operational Test Procedure*
OTP-314-007	*241-AZ 02A Pit Leak Detector Operational Test Procedure*
OTP-314-008	*241-AW-A Valve Pit Manifold Valves and Position Indication Operational Test Procedure*
OTP-314-009	*241-AW-B Valve Pit Manifold Valves and Position Indication Operational Test Procedure*
OTP-314-010	*241-AW-A Valve Pit leak Detector Operational Test Procedure*
OTP-314-011	*241-AW-B Valve Pit leak Detector Operational Test Procedure*
OTP-W030-003	*Cathodic Protection System Operational Test Procedure*
S-CC-0044	*Site Water Compliance Reduced Pressure Backflow Assembly Test Using A Differential Pressure Gauge Type Test Kit*
T0-001-181	*Emergency Procedure for AN-farm*
T0-001-182	*Emergency Procedure for AP-farm*
T0-001-183	*Emergency Procedure for AW-farm*
T0-001-188	*Emergency Procedure for AY-farm*
T0-001-189	*Emergency Procedure for AZ-farm*
T0-001-281	*Emergency Pumping Procedure for AN-farm*
T0-001-282	*Emergency Pumping Procedure for AP-farm*
T0-001-283	*Emergency Pumping Procedure for AW-farm*
T0-001-288	*Emergency Pumping Procedure for AY-farm*
T0-001-289	*Emergency Pumping Procedure for AZ-farm*
T0-020-003	*Removal and Installation of Gear Actuated Valve Pit Valve Operator Assemblies*
T0-020-070	*Risers, Leak Detection Drywells, Intake Drywells/Annulus risers*
T0-020-142	*Video Examination of DST Interiors, DST Annulus and Exposed Waste Transfer Piping*
T0-020-240	*Water Addition to Leak Detection Pits*
T0-020-610	*Operate Gear Actuated Ball Valves in Double Shell Tank Valve Pits*
T0-25-005	*Perform Equipment Verification for East Tank farm transfers*
T0-080-405	*Supernatant and Sludge Sampling in Pump Pits of Waste Storage*
T0-140-170	*Pressure Testing of Process Pipelines and Pipe-in-Pipe Encasements*

Table B-1. Procedures for the 200 East Area DST Waste Transfer System.

Procedure Number	Procedure Title
T0-200-010	*Addition of Sodium Hydroxide to 241-AY-101 and AY-102 Using a Vendor Truck*
T0-200-012	*Addition of Sodium Nitrite to 241-AY-102 Using a Vendor Truck*
T0-200-070	*Addition of Sodium Hydroxide to Tank 241-AZ-102*
T0-200-012	*Perform Heat Trace Operations in AN and AW Tank farms*
T0-220-026	*Perform 241-AX-101 Saltwell Pumping*
T0-220-030	*Addition of Sodium Hydroxide to Tank 241-AN-107 using a Vendor Truck*
T0-220-032	*Addition of Sodium Hydroxide to Tank 241-AN-102 using a Vendor Truck*
T0-220-034	*Operate 241-AN-107 Recirc/Transfer Pump*
T0-220-040	*Specific Transfer Procedure TK-101-AW to TK-106-AW*
T0-220-091	*Flush level Indication Transmitter Wire and Displace for Tank 241-AN-107*
T0-220-094	*Addition of Sodium Hydroxide to Tank 241-AN-106 Using a Vendor Truck*
T0-230-010	*Transfer Waste from Tank 106-AW to Tank 103-AW*
T0-230-023	*Transfer from Tank 108-AP to Tank 102-AW*
T0-230-033	*Recirc-Transfer of Tank 241-AW-102*
T0-230-099	*Transfer Solution via A-350 Lift Station to Tk-102-AW*
T0-230-0108	*Specific Transfer Procedure: Transfer Tk-104-AW to Tk-102-AW*
T0-230-146	*Transfer from Tk-107-AP to Tk-102 AW*
T0-250-300	*Transfer from 241-AZ-151 Catch Tank to 241-AY-102*
TOMC-260-080	*External Transfer from 244-AR tank 001 to 241-AY-102*
T0-260-501	*Transfer From 241-AZ-151 Catch Tank to 241-AZ-101 Double Shell Tank*
T0-270-013	*Transfer From 244-BX DCRT to 241-AP-102*
T0-270-021	*Transfer from 241-AP-102 to 241-AP-108*
T0-270-027	*Transfer From 241-AP-102 to 241-AP-107*
T0-270-102	*241-AP-102 Material Balance for 241-A-101 and 241-AX-101 Saltwell Transfers*
T0-270-103	*241-AP-102 Material Balance for 244-BX DCRT Transfers*
TF-FT-209-006	*Perform Functional Test for Misc. Tank Farm Transfer Leak Detectors*
TF-FT-229-006	*Perform Functional Test for AN Farm Transfer Leak Detectors*
TF-FT-239-006	*Perform Functional Test for AW Farm Transfer Leak Detectors*
TF-FT-259-006	*Perform Functional Test for A/AX/AY/AZ Farms Transfer Leak Detectors (L-1)*
TF-FT-259-007	*Perform Functional Test for A/AX/AY/AZ Farms Transfer Leak Detectors (L 2)*
TF-FT-279-006	*Perform Functional Test for AP Farm Transfer Leak Detectors*
TF-OR-A-03	*AP, AW Tank Farms Daily Rounds*
TF-OR-EF-204AR	*204 Rail Car Waste Unloading Building Daily Rounds*
TF-OR-EF-244AR	*244-AR Vault Daily Rounds*
TF-OR-EF-AAX-D	*A & AX Tank Farms Daily Rounds*
TF-OR-EF-AAX-Q	*A & AX Tank Farms Quarterly Rounds*
TF-OR-EF-AAX-W	*A & AX Tank Farms Weekly Rounds*

Table B-1. Procedures for the 200 East Area DST Waste Transfer System.

Procedure Number	Procedure Title
TF-OR-EF-AN	*AN Tank Farm Rounds*
TF-OR-EF-AYAZ-D	*AY & AZ Tank Farms Daily Rounds*
TF-OR-EF-AYAZ-M	*AY & AZ Tank Farms Monthly Rounds*
TF-OR-EF-AYAZ-W	*AY & AZ Tank Farms Weekly Rounds*

APPENDIX C

VENDOR INFORMATION FILES

This page intentionally left blank.

APPENDIX C

VENDOR INFORMATION FILES

Because this system spans several different facilities and has been built at over a long time span, some vendor information is not readily available. Records of specific components may be searched using the Insight database system.

Vendor number	Supply number	Vendor	Equipment title	Equipment number
Pumps				
50161	00		Vertical Turbine Pumps	
50161	001	US Motors	Hollowshaft 30 HP	
50161	002		Vertical Turbine Pump	65P-TX4
21991	003		Modification/Testing Data for Vertical Turbine	1P-TX1-AN\AW
Pipeline Instrumentation				
21991	004		Pressure Transmitter	
21991	005	Sensotec	Signal Conditioner Flow meter	
50161	01		Various Equipment 102-AN Caustic System	
Jumpers & Valves				
50178		Worcester	Jumper Manifolds, Controls	
Miscellaneous				
50031		Various	W-314 Project	

This page intentionally left blank.

APPENDIX D

SYSTEM HISTORY

This page intentionally left blank.

APPENDIX D

SYSTEM HISTORY

The documents and procedures listed in Table D-1 are not active or maintained under configuration control. These documents and procedures are considered to contain information that is relevant and helpful to understanding the 200 East Area DST WTS. They should be used with caution because they may not reflect current field configuration.

Table D-1. 200E DST Waste Transfer System Historical Documents.

Document/Procedure Number	Title
FDM-T-020-00002	*Waste Transfer & Routing Facilities*
RPP-6985	*Feasibility to Upgrade 275 psi Rated Transfer System Pipe*
FDM-T-200-00002	*241-AN Tank Farm Facility Description Manual*
FDM-T-200-00003,	*Aging Waste Tank Facilities Description Manual*
ISO-185	*Design Criteria PUREX Tank Farm Expansion*
HWS-5786	*Specification for Jumper Fabrication*
HWS-8867	*Specification for Completion of Tank 102 Project HAP-647 Tank Farm Expansion 241-AZ Tank Farm*
HWS-8981	*Spec for Excavation and Tank foundations PUREX Tank Farm Expansion*
FDM-T-200-00001	*241-AW Tank Farm Facility Description Manual*
ARH-CD-362	*Functional Design Criteria: Additional High-Level Waste Storage Facilities*
ARH-1437	*Design Criteria: PUREX AZ Tank Farm*
SD-340-FDC-001	*Functional Design Criteria: Project B-340, 241-AP Tank Farm*
ARH-CD-304	*Functional Design Criteria: Additional High-Level Waste Handling and Storage Facilities,*

This page intentionally left blank.

APPENDIX E

CROSS-REFERENCE TO TANK FARM FACILITY SYSTEM DESIGN DESCRIPTIONS CONTROLLED BY DESIGN ENGINEERING

This page intentionally left blank.

APPENDIX E

CROSS-REFERENCE TO TANK FARM FACILITY SYSTEM DESIGN DESCRIPTIONS CONTROLLED BY DESIGN ENGINEERING

The information in Table E-1 will help the reader understand how this system design description (SDD) document relates to SDDs of other tank farm systems and facilities.

The tank farms' mission has changed from safely storing Hanford Site radioactive hazardous waste to delivering waste feed to the Waste Treatment Plant. Many changes to the tank farms facilities will be needed to support this new mission. Understanding the existing facility designs and their bases is crucial to efficiently designing and implementing changes. To this end, a list was compiled during fiscal year 2002 of all of the SDDs necessary to describe the tank farm nuclear facilities design and their bases. In general, the scopes of the SDDs were based on the systems defined by the ongoing labeling scheme in the tank farms, or logical geographic, or engineering discipline groupings of those systems. The labeling scheme is summarized on Hanford Site Drawing H-14-20000, *Tank Farms Systems P&ID Structures Legend.* Table E-1 lists the SDDs that were envisioned when the initiative began and includes an abstract of each SDD's scope.

Table E-1. Cross-Reference to Tank Farm Facility System Design Descriptions.

Document Number (RPP)	Document Title	Document Scope	Notes
15136	System Design Description for the **Replacement Cross-Site Transfer System** Between 200 West and 200 East Tank Farms	Includes lift stations, vent/siphon stations, pumps, valves, pipe, jumpers, manifolds, heat trace, leak detection, master pump shutdown system, clean-out boxes, flush and dilution water supply from some interface, and process instrumentation (controllers, data acquisition, flow rate, pressure, temperature, mass balance) from Valve Pit SY-A to Valve Pit 244-A, not including the pits.	After Documented Safety Analysis (DSA) implementation, supersedes RPP-9811
15137	System Design Description for **200 East** Area Double-Shell Tank **Waste Transfer** System	Includes lift stations, vent/siphon stations, pumps, valves, pipe, jumpers, manifolds, heat trace, leak detection, master pump shutdown system, clean-out boxes, flush and dilution water supply from some interface, process instrumentation (controllers, data acquisition, flow rate, pressure, temperature, mass balance) for intra-farm and inter-farm waste transfers for double-shell tank farms in 200 East Area downstream of Pit 244-A, including Pit 244-A.	After DSA implementation, supersedes RPP-10638

Table E-1. Cross-Reference to Tank Farm Facility System Design Descriptions.

Document Number (RPP)	Document Title	Document Scope	Notes
15138	System Design Description for **200 West** Area Double-Shell Tank **Waste Transfer** System	Includes lift stations, vent/siphon stations, pumps, valves, pipe, jumpers, manifolds, heat trace, leak detection, master pump shutdown system, clean-out boxes, flush and dilution water supply from some interface, and process instrumentation (controllers, data acquisition, flow rate, pressure, temperature, mass balance) for intra-farm and inter-farm waste transfers for SY Tank Farm, upstream of Pit SY-A, including the pit.	After DSA implementation, supersedes RPP-10682
15141	System Design Description of **Electrical Distribution** System for **AN** Tank Farm	Electrical distribution system less than 480 volts to some breaker downstream	After DSA implementation, supersedes RPP-9262
15142	System Design Description of **Electrical Distribution** System for **AP** Tank Farm	Electrical distribution system less than 480 volts to some breaker downstream	After DSA implementation, supersedes RPP-9263
15143	System Design Description of **Electrical Distribution** System for **SY** Tank Farm	Electrical distribution system less than 480 volts to some breaker downstream	After DSA implementation, supersedes RPP-9261
15144	System Design Description of **Electrical Distribution** System for **AW** Tank Farm	Electrical distribution system less than 480 volts to some breaker downstream	After DSA implementation, supersedes RPP-15145
15145	System Design Description of **Electrical Distribution** System for **AY/AZ** Tank Farm	Electrical distribution system less than 480 volts to some breaker downstream	After DSA implementation, supersedes RPP-9266
15118	System Design Description for **AN** Tank Farm **Ventilation Tank Annulus** System	The annulus ventilation system includes ventilation system inlet stations, filtration, valves, and ductwork from the atmosphere to the tank inlet riser flange. Also includes exhaust ducting, valves, deentrainment equipment, conditioning equipment, condensate collection subsystems, filter trains, fans, and stack gaseous emission sampling and monitoring systems from the tank exhaust riser flange to the top of the exhaust stack.	After DSA implementation, supersedes RPP-9997

Table E-1. Cross-Reference to Tank Farm Facility System Design Descriptions.

Document Number (RPP)	Document Title	Document Scope	Notes
15119	System Design Description for **AN** Tank Farm **Ventilation Tank Primary** System	The primary ventilation system includes ventilation system inlet stations, filtration, valves, and ductwork from the atmosphere to the tank inlet riser flange. Also includes exhaust ducting, valves, deentrainment equipment, conditioning equipment, condensate collection subsystems, filter trains, fans, and stack gaseous emission sampling and monitoring systems from the tank exhaust riser flange to the top of the exhaust stack.	After DSA implementation, supersedes RPP-9996
15120	System Design Description for **AW** Tank Farm **Ventilation Tank Annulus** System	The annulus ventilation system includes ventilation system inlet stations, filtration, valves, and ductwork from the atmosphere to the tank inlet riser flange. Also includes exhaust ducting, valves, deentrainment equipment, conditioning equipment, condensate collection subsystems, filter trains, fans, and stack gaseous emission sampling and monitoring systems from the tank exhaust riser flange to the top of the exhaust stack.	After DSA implementation, supersedes RPP-10092
15121	System Design Description for **AW** Tank Farm **Ventilation Tank Primary** System	The primary ventilation system includes ventilation system inlet stations, filtration, valves, and ductwork from the atmosphere to the tank inlet riser flange. Also includes exhaust ducting, valves, deentrainment equipment, conditioning equipment, condensate collection subsystems, filter trains, fans, and stack gaseous emission sampling and monitoring systems from the tank exhaust riser flange to the top of the exhaust stack.	After DSA implementation, supersedes RPP-10091
15123	System Design Description for **AP** Tank Farm **Ventilation Tank Annulus** System	The annulus ventilation system includes ventilation system inlet stations, filtration, valves, and ductwork from the atmosphere to the tank inlet riser flange. Also includes exhaust ducting, valves, deentrainment equipment, conditioning equipment, condensate collection subsystems, filter trains, fans, and stack gaseous emission sampling and monitoring systems from the tank exhaust riser flange to the top of the exhaust stack.	After DSA implementation, supersedes RPP-10665

Table E-1. Cross-Reference to Tank Farm Facility System Design Descriptions.

Document Number (RPP)	Document Title	Document Scope	Notes
15124	System Design Description for **AP** Tank Farm **Ventilation Tank Primary** System	The primary ventilation system includes ventilation system inlet stations, filtration, valves, and ductwork from the atmosphere to the tank inlet riser flange. Also includes exhaust ducting, valves, deentrainment equipment, conditioning equipment, condensate collection subsystems, filter trains, fans, and stack gaseous emission sampling and monitoring systems from the tank exhaust riser flange to the top of the exhaust stack.	After DSA implementation, supersedes RPP-10664
15125	System Design Description for **SY** Tank Farm **Ventilation Tank Annulus** System	The annulus ventilation system includes ventilation system inlet stations, filtration, valves, and ductwork from the atmosphere to the tank inlet riser flange. Also includes exhaust ducting, valves, deentrainment equipment, conditioning equipment, condensate collection subsystems, filter trains, fans, and stack gaseous emission sampling and monitoring systems from the tank exhaust riser flange to the top of the exhaust stack.	After DSA implementation, supersedes RPP-10667
15126	System Design Description for **SY** Tank Farm **Ventilation Tank Primary** System	The primary ventilation system includes ventilation system inlet stations, filtration, valves, and ductwork from the atmosphere to the tank inlet riser flange. Also includes exhaust ducting, valves, deentrainment equipment, conditioning equipment, condensate collection subsystems, filter trains, fans, and stack gaseous emission sampling and monitoring systems from the tank exhaust riser flange to the top of the exhaust stack.	After DSA implementation, supersedes RPP-10666
15127	System Design Description for **AY/AZ** Tank Farm **Ventilation Tank Primary** System	The primary ventilation system includes ventilation system inlet stations, filtration, valves, and ductwork from the atmosphere to the tank inlet riser flange. Also includes exhaust ducting, valves, deentrainment equipment, conditioning equipment, condensate collection subsystems, filter trains, fans, and stack gaseous emission sampling and monitoring systems from the tank exhaust riser flange to the top of the exhaust stack.	After DSA implementation, supersedes RPP-10668

Table E-1. Cross-Reference to Tank Farm Facility System Design Descriptions.

Document Number (RPP)	Document Title	Document Scope	Notes
15128	System Design Description for **AY/AZ** Tank Farm **Ventilation Tank Annulus** System	The annulus ventilation system includes ventilation system inlet stations, filtration, valves, and ductwork from the atmosphere to the tank inlet riser flange. Also includes exhaust ducting, valves, deentrainment equipment, conditioning equipment, condensate collection subsystems, filter trains, fans, and stack gaseous emission sampling and monitoring systems from the tank exhaust riser flange to the top of the exhaust stack.	After DSA implementation, supersedes RPP-10669
15129	System Design Description for **Standard Single-Shell Tank Farm Ventilation** Systems	Includes the ventilation tank primary systems, both active and passive, for all the single-shell tanks in the 200 East and 200 West Areas.	Will be effective after DSA implementation.
15130	System Design Description for **Double-Contained Receiver Tank** Ventilation and Purge Air Systems	Includes the ventilation tank primary and annulus systems and that portion of the Waste Storage Tank system that is referred to as the purge air system for double-Contained receiver tanks. Does not include tank structure, pump pits, mixer or transfer pumps, gas monitoring, or cameras.	Will be effective after DSA implementation.
15131	System Design Description for **AW** Tank Farm Double-Shell **Tank Waste Storage** System	Includes primary and secondary tank structure, central pump pit, annulus pump pit, leak detector pit, mixer pumps, monitoring equipment (level, temperature, pressure, leak (continuous air monitors [CAM] used for annulus leak detection). Does not include ventilation, tank integrity, gas monitoring, cameras.	After DSA implementation, supersedes RPP-9173
15132	System Design Description for **AN** Tank Farm Double-Shell **Tank Waste Storage** System	Includes primary and secondary tank structure, central pump pit, annulus pump pit, leak detector pit, mixer pumps, monitoring equipment (level, temperature, pressure, leak (CAMs used for annulus leak detection). Does not include ventilation, tank integrity, gas monitoring, cameras.	After DSA implementation, supersedes RPP-10658
15133	System Design Description for **AP** Tank Farm Double-Shell **Tank Waste Storage** System	Includes primary and secondary tank structure, central pump pit, annulus pump pit, leak detector pit, mixer pumps, monitoring equipment (level, temperature, pressure, leak (CAMs used for annulus leak detection). Does not include ventilation, tank integrity, gas monitoring, cameras.	After DSA implementation, supersedes RPP-9850

Table E-1. Cross-Reference to Tank Farm Facility System Design Descriptions.

Document Number (RPP)	Document Title	Document Scope	Notes
15134	System Design Description for **SY** Tank Farm Double-Shell **Tank Waste Storage** System	Includes primary and secondary tank structure, central pump pit, annulus pump pit, leak detector pit, mixer pumps, monitoring equipment (level, temperature, pressure, leak (CAMs used for annulus leak detection). Does not include ventilation, tank integrity, gas monitoring, cameras.	After DSA implementation, supersedes RPP-10659
15135	System Design Description for **AY/AZ** Tank Farm Double-Shell **Tank Waste Storage** System	Includes primary and secondary tank structure, central pump pit, annulus pump pit, leak detector pit, mixer pumps, monitoring equipment (level, temperature, pressure, leak (CAMs used for annulus leak detection). Does not include ventilation, tank integrity, gas monitoring, cameras.	After DSA implementation, supersedes RPP-10660
15146	System Design Description for Tank Farms Double-Shell Tank **Emergency Annulus Pumping** System	All auxiliary equipment that is not already part of the double-shell tank (DST) waste storage tank and waste storage tank annulus that is needed to pump all DST annuli	After DSA implementation, supersedes RPP-9174
15147	System Design Description for Tank Farms **Tank Monitor and Control System**	All River Protection Project (RPP)facilities where Tank Monitoring and Control System equipment is installed	After DSA implementation, supersedes RPP-10684
15140	System Design Description for **Waste Transfer Systems** Installed to Support Tank Farms **Stabilization** Project	Over-ground hose-in-hose waste transfer lines, vehicle barriers, heat tracing, hose end connectors, and radiation shielding.	Will be effective after DSA implementation.
		Deferred	
None planned	System Design Description for **Water Supply and Distribution** Systems for Tank Farms	Treatment and distribution systems for all RPP nuclear facilities for all categories of water	Water supply interface to farms will be included in waste transfer SDDs
	System Design Description for Tank Farms **Instrument-Air** Systems	Compressors, all air treatment devices and distribution piping for all RPP nuclear facilities	Deferred
	System Design Description for Tank Farm **204-AR** Facility	Includes building and major subsystems, such as the electrical distribution system, ventilation , instrumentation and control, which are not clearly part of other SDDs	Deferred
	System Design Description of **Electrical Distribution** System for **A/AX** Tank Farm	Electrical distribution system less than 480 volts to some breaker downstream	Deferred
	System Design Description of **Electrical Distribution** System for **B/BX/BY** Tank Farm	Electrical distribution system less than 480 volts to some breaker downstream	Deferred

Table E-1. Cross-Reference to Tank Farm Facility System Design Descriptions.

Document Number (RPP)	Document Title	Document Scope	Notes
	System Design Description of **Electrical Distribution** System for **C** Tank Farm	Electrical distribution system less than 480 volts to some breaker downstream	Deferred
	System Design Description of **Electrical Distribution** System for **S/SX** Tank Farm	Electrical distribution system less than 480 volts to some breaker downstream	Deferred
	System Design Description of **Electrical Distribution** System for **T/TX/TY** Tank Farms	Electrical distribution system less than 480 volts to some breaker downstream	Deferred
	System Design Description of **Electrical Distribution** System for **U** Tank Farm	Electrical distribution system less than 480 volts to some breaker downstream	Deferred
	System Design Description of **Electrical Distribution** System for **Miscellaneous** Equipment/Facilities	Electrical distribution system less than 480 volts to some breaker downstream	Deferred
	System Design Description for **SX** Tank Farm **Sludge Cooler** Ventilation System	Primary ventilation systems, includes inlet filtration and exhaust train from tank riser flange to top of exhaust stack, including gaseous emission monitoring	Deferred
	System Design Description for **C** Tank Farm **P-16 Ventilation** System	Primary ventilation systems, includes inlet filtration and exhaust train from tank riser flange to top of exhaust stack, including gaseous emission monitoring	Deferred
	System Design Description for Tank Farm **Portable Tank Ventilation Systems**	Presently undefined	Deferred
	System Design Description for Tank Farm **Miscellaneous Tank Ventilation** Systems	Presently undefined	Deferred
	System Design Description for **A/AX** Tank Farm Single-Shell **Waste Storage Tank** System	Includes primary tank structure, central pump pit, leak detector pit, pumps, monitoring equipment (level, temperature, pressure, leak detectors). Does not include ventilation, tank integrity, gas monitoring, cameras	Deferred
	System Design Description for **B** Tank Farm Single-Shell **Waste Storage Tank** System	Includes primary tank structure, central pump pit, leak detector pit, pumps, monitoring equipment (level, temperature, pressure, leak detectors). Does not include ventilation, tank integrity, gas monitoring, cameras	Deferred

Table E-1. Cross-Reference to Tank Farm Facility System Design Descriptions.

Document Number (RPP)	Document Title	Document Scope	Notes
	System Design Description for **BX/BY** Tank Farm Single-Shell **Waste Storage Tank** System	Includes primary tank structure, central pump pit, leak detector pit, pumps, monitoring equipment (level, temperature, pressure, leak detectors). Does not include ventilation, tank integrity, gas monitoring, cameras	Deferred
	System Design Description for **C** Tank Farm Single-Shell **Waste Storage Tank** System	Includes primary tank structure, central pump pit, leak detector pit, pumps, monitoring equipment (level, temperature, pressure, leak detectors). Does not include ventilation, tank integrity, gas monitoring, cameras	Deferred
	System Design Description for **S/SX** Tank Farm Single-Shell **Waste Storage Tank** System	Includes primary tank structure, central pump pit, leak detector pit, pumps, monitoring equipment (level, temperature, pressure, leak detectors). Does not include ventilation, tank integrity, gas monitoring, cameras	Deferred
	System Design Description for **T** Tank Farm Single-Shell **Waste Storage Tank** System	Includes primary tank structure, central pump pit, leak detector pit, pumps, monitoring equipment (level, temperature, pressure, leak detectors). Does not include ventilation, tank integrity, gas monitoring, cameras	Deferred
	System Design Description for **TX/TY** Tank Farm Single-Shell **Waste Storage Tank** System	Includes primary tank structure, central pump pit, leak detector pit, pumps, monitoring equipment (level, temperature, pressure, leak detectors). Does not include ventilation, tank integrity, gas monitoring, cameras	Deferred
	System Design Description for **U** Tank Farm Single-Shell **Waste Storage Tank** System	Includes primary tank structure, central pump pit, leak detector pit, pumps, monitoring equipment (level, temperature, pressure, leak detectors). Does not include ventilation, tank integrity, gas monitoring, cameras	Deferred
	System Design Description for **Waste Transfer** Systems Between and Within **200 East Area Single-Shell** Tank Farms	Includes lift stations, vent/siphon stations, pumps, valves, pipe, jumpers, manifolds, heat trace, leak detection, master pump shutdown system, clean-out boxes, flush and dilution water supply from some interface, and process instrumentation (controllers, data acquisition, flow rate, pressure, temperature, mass balance) for intra-farm and inter-farm waste transfers for single-shell tank farms in the 200 East Area	Deferred

Table E-1. Cross-Reference to Tank Farm Facility System Design Descriptions.

Document Number (RPP)	Document Title	Document Scope	Notes
None planned	System Design Description for **Waste Transfer** Systems Between and Within **200 West Area Single-Shell** Tank Farms	Consists primarily of buried unencased waste transfer piping.	Because this transfer equipment is deemed unreliable, it will not be used for transfers; hence, no SDD is needed
	System Design Description for **Portable Interim Stabilization** Tank Farms Systems	Includes primary tank structure, central pump pit, leak detector pit, pumps, monitoring equipment (level, temperature, pressure, leak detectors). Does not include ventilation, tank integrity, gas monitoring, cameras	Deferred
	System Design Description for Tank Farms **Camera** Systems	Permanently installed and portable camera and purge gas systems for all RPP nuclear facilities	Deferred
	System Design Description for Tank Farms **Gas Monitoring** Systems	Fixed gas characterization, gas monitoring, and the standard hydrogen monitoring system for all RPP facilities (does not include portable gas monitoring equipment).	Deferred
	System Design Description for Tank Farms **Characterization** Systems	Portable sampling equipment, fixtures, mobile support systems	See separate and specific project documents
	System Design Description for Tank Farms **Fire Protection** Systems	All types of fire protection systems for all RPP nuclear and non-nuclear facilities	Deferred
	System Design Description for Tank Farms **Chemical Handling** Systems	Storage, staging, mixing, monitoring and distribution systems for chemical acids and bases for all RPP nuclear facilities	Deferred
	System Design Description for Tank Farms **Breathing-Air** Systems	Fixed and portable emergency and normal breathing air for all RPP nuclear facilities	Deferred
	System Design Description for Tank Farms **Cathodic Protection** Systems	Cathodes, monitoring, and connecting instrumentation for all RPP nuclear facilities	Deferred
	System Design Description for Tank Farms **Portable Diesel Generators**	Portable and fixed generators, and associated fuel and distribution systems for all RPP nuclear facilities	Deferred
	System Design Description for **Portable and Fixed Steam Generators**, and Associated Fuel and Distribution Systems in Tank Farms Nuclear Facilities	Portable and fixed generators, and associated fuel and distribution systems for all RPP nuclear facilities	Deferred

Table E-1. Cross-Reference to Tank Farm Facility System Design Descriptions.

Document Number (RPP)	Document Title	Document Scope	Notes
	System Design Description for Tank Farm **242-S** Facility	Includes building and major sub-systems, such as EDS, ventilation, I&C, which are not clearly part of other SDDs	Deferred
	System Design Description for Tank Farm **242-T** Facility	Includes building and major sub-systems, such as EDS, ventilation, I&C, which are not clearly part of other SDDs	Deferred
	System Design Description for Tank Farms **244-AR** Facility	Includes building and major sub-systems, such as EDS, ventilation, I&C, which are not clearly part of other SDDs	Deferred
	System Design Description for Tank Farms **244-CR** Facility	Includes building and major sub-systems, such as EDS, ventilation, I&C, which are not clearly part of other SDDs	Deferred

DISTRIBUTION

Onsite

1	U.S. Department of Energy Richland Operations Office	
	DOE Public Reading Room	H2-53
1	Pacific Northwest National Laboratory	
	Hanford Technical Library	P8-55
2	Lockheed Martin Services, Inc.	
	Central Files	B1-07
	Document Processing Center	A3-94

This page intentionally left blank.