Sta 4 S

21 JAN 13 2003

ENGINEERING DATA TRANSMITTAL

1. EDT 635111

2. To: (Receiving Organization) Distribution	3. From: (Originating Organization) CHG Design Engineering	4. Related EDT No.: N/A
5. Proj./Prog./Dept./Div.: Design Engineering	6. Design Authority/Design Agent/Cog. Engr.: Tom Mackey, R3-83, 373-3823	7. Purchase Order No.: N/A
8. Originator Remarks: Release and Distribution of RPP-14065, Rev. 0 "Maximum Allowable Hydraulic Ram Force for Heel jet Removal, Tank 241-C-106" No USQ Required		9. Equip./Component No.: N/A
		10. System/Bldg./Facility: Tank 241-C-106
11. Receiver Remarks:	11A. Design Baseline Document? [ ]Yes [X] No 1/6/03	12. Major Assm. Dwg. No.: N/A
		13. Permit/Permit Application No.: N/A
		14. Required Response Date:

15. DATA TRANSMITTED

(A) Item No.	(B) Document/Drawing No.	(C) Sheet No.	(D) Rev. No.	(E) Title or Description of Data Transmitted	(F) Approval Designator	(G) Reason for Transmittal	(H) Originator Disposition	(I) Receiver Disposition
1	RPP-14065	Acc	0	Maximum Allowable Hydraulic Ram Force for Heel jet Removal, Tank 241-C-106	N/A 1/6/03	1, 2	1	

16. KEY

Approval Designator (F)	Reason for Transmittal (G)	Disposition (H) & (I)
E, S, Q, D or N/A (see WHC-CM-3-5, Sec. 12.7)	1. Approval 2. Release 3. Information 4. Review 5. Post-Review 6. Dist. (Receipt Acknow. Required)	1. Approved 2. Approved w/comment 3. Disapproved w/comment 4. Reviewed no/comment 5. Reviewed w/comment 6. Receipt acknowledged

17. SIGNATURE/DISTRIBUTION (See Approval Designator for required signatures)

(G) Reason	(H) Disp.	(J) Name	(K) Signature	(L) Date	(M) MSIN	(G) Reason	(H) Disp.	(J) Name	(K) Signature	(L) Date	(M) MSIN
1	1	Design Auth. T.C. Mackey	[signature]	1/6/03	R7-83	1	1	Ind Review - H Ziada	[signature]	1-6-03	
1	1	Design Agent SS Paulsen	[signature]	1/6/03		1	1	PAUL DORSH	[signature]	1/7/03	R3-83
1	1	Cog. Eng. Steve O'Toole	[signature]	ST-65 1/10/03		1	1	JIM BELLOMY	[signature]	1-7-03	R3-83
1	1	Cog. Mgr. W. Thompson	[signature]	ST-65 1/10/02							
		QA									
		Safety									
		Env.									

18.	19.	20.	21. DOE APPROVAL (if required)
SSPaulsen [signature] 1/6/03 Signature of EDT Originator Date	xxx Authorized Representative for Receiving Organization Date	xxx [signature] 1/10/03 Design Authority/ Cognizant Manager Date	Ctrl. No. N/A [ ] Approved [ ] Approved w/comments [ ] Disapproved w/comments

BD-7400-172-2 (10/97)

BD-7400-172-1

MAXIMUM ALLOWABLE HYDRAULIC RAM FORCE FOR HEEL JET REMOVAL, TANK 241-C-106

S.S. Paulsen
CH2M HILL Hanford Group Inc.

Richland, WA 99352
U.S. Department of Energy Contract DE-AC06-96RL13200

EDT/ECN: 635111 UC: N/A
Org Code: CP54/76500 Charge Code: 501555
B&R Code: N/A Total Pages: 15

Key Words:

Abstract: This document contains an evaluation of the maximum force that can be used to actuate the hydraulic ram assembly without causing permanent damage to the riser or pit.

TRADEMARK DISCLAIMER. Reference herein to any specific commercial product, process, or service by trade name, trademark, manufacturer, or otherwise, does not necessarily constitute or imply its endorsement, recommendation, or favoring by the United States Government or any agency thereof or its contractors or subcontractors.

Printed in the United States of America. To obtain copies of this document, contact: Document Control Services, P.O. Box 950, Mailstop H6-08, Richland WA 99352, Phone (509) 372-2420; Fax (509) 376-4989.

JAN 13 2003
DATE:
STA: 4
HANFORD RELEASE
ID: 21

1/10/03
Release Approval Date Release Stamp

Approved For Public Release

Maximum Allowable Hydraulic Ram Force for Heel Jet Removal, Tank 241-C-106

Prepared for the U.S. Department of Energy
Assistant Secretary for Environmental Management

CH2MHILL
Hanford Group, Inc.
Richland, Washington
Contractor for the U.S. Department of Energy
Office of River Protection under Contract DE-AC06-99RL14047

Maximum Allowable Hydraulic Ram Force for Heel Jet Removal, Tank 241-C-106

Prepared by
Sam Paulsen
Los Alamos Technical Associates

Date Published
January 2003

CH2MHILL
Hanford Group, Inc.

P. O. Box 1500
Richland, Washington

Contractor for the U.S. Department of Energy
Office of River Protection under Contract DE-AC06-99RL14047

LEGAL DISCLAIMER

This report was prepared as an account of work sponsored by an agency of the United States Government. Neither the United States Government nor any agency thereof, nor any of their employees, nor any of their contractors, subcontractors or their employees, makes any warranty, express or implied, or assumes any legal liability or responsibility for the accuracy, completeness, or any third party's use or the results of such use of any information, apparatus, product, or process disclosed, or represents that its use would not infringe privately owned rights. Reference herein to any specific commercial product, process, or service by trade name, trademark, manufacturer, or otherwise, does not necessarily constitute or imply its endorsement, recommendation, or favoring by the United States Government or any agency thereof or its contractors or subcontractors. The views and opinions of authors expressed herein do not necessarily state or reflect those of the United States Government or any agency thereof.

Printed in the United States of America

Subject: Maximum Allowable Hydraulic Ram Force for Heel Jet Removal, Tank 241-C-106
Originator: Sam Paulsen Date: 1/2/03
Checker: Greg Lisle Date: 1/6/03

ANALYTICAL CALCULATIONS APPROVAL

Subject: Maximum Allowable Hydraulic Ram Force for Heel Jet Removal, Tank 241-C-106

The subject document has been reviewed by the undersigned.
The reviewer reviewed and verified the following items as applicable

Documents Reviewed: Maximum Allowable Hydraulic Ram Force for Heel Jet Removal, Tank 241-C-106

Analysis Performed By: Sam Paulsen

- Design Input
- Basic Assumption
- Approach/Design Methodology
- Related information
- Conclusion/Result Interpretation

Reviewer/Approver (print) Hassan H. Ziada

Reviewer/Approver (signature) Hassan H. Ziada Date 1-6-03

Subject: Maximum Allowable Hydraulic Ram Force for Heel Jet Removal, Tank 241-C-106
Originator: Sam Paulsen Date: 1/2/03
Checker: Greg Lisle Date: 1/6/03

Design Review Checklist for Simple Designs/Simple Design Changes (Routine Engineering Change Notices)

Subject: Maximum Allowable Hydraulic Ram Force for Heel Jet Removal, Tank 241-C-106

Originator: Sam Paulsen Date: 1/2/03
(Print/Sign)

Checker: Greg Lisle
Date: 1/6/03

This document consists of 9 pages and the following attachments (if applicable): Attachment A (2 pgs)

Documents/Engineering Change Notices Reviewed:
Maximum Allowable Hydraulic Ram Force for Heel Jet Removal, Tank 241-C-106

Affected Documents: N/A

Yes	No	N/A	
[X]	[ ]	[ ]	Were the design inputs correctly selected?
[X]	[ ]	[ ]	Are assumptions necessary to perform the design activity adequately described and reasonable?
[ ]	[ ]	[X]	Where necessary, are the assumptions identified for subsequent re-verifications when the detailed design activities are completed?
[X]	[ ]	[ ]	Was an appropriate design method used?
[X]	[ ]	[ ]	Were the design inputs correctly incorporated into the design?
[X]	[ ]	[ ]	Is the design output reasonable compared to design inputs?
[ ]	[ ]	[X]	Are the necessary design input verification requirements for interfacing organizations specified in the design documents or in supporting procedures or instructions?

Checklist Completed By: Date 1/6/03
(Print/Sign)

Subject: Maximum Allowable Hydraulic Ram Force for Heel Jet Removal, Tank 241-C-106 Page ____ of ____
Originator: Sam Paulsen Date: 1/6/03
Checker: Greg Lisle Date: 1/6/03

1.0 Purpose

The Hydraulic Ram for Heel Jet Removal tool was developed to aid in the removal of the heel jet pump that is currently installed in Riser 13 Adapter Ring Assembly of Tank 241-C-106. The ram is capable of exerting 18000 lbf linearly, Attachment A, pg. 2, Model RD-93. There is a concern that if the ram is actuated at full capacity it could cause permanent damage to Riser 13 Adapter Ring Assembly, its components, or other pit components (see H-2-41294, H-2-41295, and H-2-41345) . This calculation determines the maximum force that can be imparted into the system via the hydraulic ram assembly. ~~The maximum pressure that can be imparted into hydraulic cylinder, Enerpac Model RD-93 (see Attachment A pg. 2), is calculated.~~ 1/6/03

Five situations are investigated to determine which will be the hydraulic ram limiting factor: Maximum Allowable Uplift Force, Maximum Allowable Horizontal Force, Maximum Allowable Concrete Wall Bearing Force, Concrete Slab Shear, and the Maximum Allowable Downward Force Translated to the Riser Adapter Assembly.

2.0 Open Items

None

3.0 Method of Analysis

The methods used in this calculation are basic static force and moment equations that are used to calculate resultant forces. The maximum forces are extracted by inputting the allowable forces per situation criteria. There are two hydraulic assemblies, and both will be considered actuating at the same time for conservatism.

This hand calculation was performed in Mathcad 2001 and checked via hand calculator.

4.0 Input Data

4.1. Dimensions and Hydraulic Ram configuration are referenced from Attachment A, RPP-13775, and H-14-105651.
4.2. The maximum allowable force of the ram that can act horizontally to the wall is 7500 lbf. (RPP-13984, 2003).
4.3. See Calculation Section for additional input data that is pertinent to individual equations.

5.0 Results

The maximum allowable linear ram force due to upward weld shear of the riser sleeve to adapter ring is 69040 lbf.
The maximum allowable linear ram force due to concrete wall bearing is 7500 lbf.
The maximum allowable linear ram force due to horizontal adapter plate bearing onto the concrete is 18000 lbf.
The amount of force it would take to shear the concrete around Riser 13 Adapter Ring Assembly is 302872 lbf.
There is no force exerted downward on the riser and riser casing due to hydraulic ram actuation.

The maximum allowable hand pump pressure to abide by the limiting force factor, 7500 lbf, is 4237 psi.

6.0 Conclusions

The hydraulic ram assembly shall be operated with no more than a 4237 psi reading on the input pressure gage, H-14-105651 (2002). This gage also has force readings, thus the force reading shall not exceed 7500 lbf at any time during the pump removal operation. The force input is regulated in order to ensure safe operation.

7.0 References

ACI 318-98/318-99R, American Concrete Institute, *Building Code Requirements for Structural Concrete and Commentary*, Farmington Hills, MI.

American Institute of Steel Construction, 1991, *Manual of Steel Construction, Allowable Stress Design*, 9th Edition, Chicago, IL

Avallone and Baumeister, 1996, *Marks' Standard Handbook for Mechanical Engineers*, 10th Edition, , McGraw Hill, New York, NY

Drawings:

H-14-105651, Rev. 0, 2002, *Hydraulic Ram for Heel Jet Removal*, 241-C-06B Heel Pit, U.S. Dept of Energy, Richland, WA.

H-2-41294, Rev. 2, 1950, *Mech. Equip. - Plan, Section & Details - Heel Jet*, The Kellex Corporation, Richland, WA.

H-2-41295, Rev. 3, 1950, *Mech. Equip. - Sub Assy - Heel Jet Adapter Ring*, The Kellex Corporation, Richland, WA.

H-2-41297, Rev. 2, 1950, *Mech. Equip. - Sub Assy - Adapter Ring*, The Kellex Corporation, Richland, WA.

H-2-41345, Rev. 3, 1950, *Structural Concrete Plan & Sections - Heel Pit*, The Kellex Corporation, Richland, WA.

H-2-41368, Rev. 3, 1950, *Structural - Construction Sequence, Heel Pit*, The Kellex Corporation, Richland, WA.

HNF-IP-0842, Vol. 4, Sec. 3.6, Engineering Calculations, Rev. 16, CH2M Hill Hanford Group, 2002, Richland, WA

RPP-13775, 2002, *Hydraulic Ram for Heel Jet Removal, 241-C-06B*, Rev. 0, CH2M Hill Hanford Group, Richland, WA

RPP-13864, 2002, *Evaluation of Riser 13 for Heel Jet Removal, Heel Pit C-06B*, Rev. 0, CH2M Hill Hanford Group, Richland, WA

RPP-13984, 2003, *Tank C-106 Heel Pit Wall Evaluation*, Rev. 0, CH2M Hill Hanford Group, Richland, WA

8.0 Calculations

8.1 Calculation Input Data

$F_{cw} := 7500 \cdot lbf$ Maximum Horizontal Concrete Pit Wall Force Allowable, RPP-13984 (2002)

8.2 Maximum Linear Hydraulic Ram Force due to Allowable Riser Adapter Ring Uplift

This calculation determines the maximum force that can be exerted by the hydraulic ram linearly and not exceed the recommended uplift on Riser 13 Adapter Ring Assembly. This evaluation does not parallel RPP-13864 (2002) because that calculation determines the limiting uplift load condition due to removal of the entire floor slab. It is impossible for the hydraulic ram assemblies to lift the floor slab because it lies outside the correct free body that the ram acts upon (i.e. the ram will push down on the floor and has no method to pull upwards). Therefore, the values calculated in RPP-13864 are not applicable to the hydraulic ram application.

Therefore, due to investigation of H-2-41295 it is apparent the only way the hydraulic ram could dislodge the riser assembly vertically is if the welds holding the riser sleeve to the adapter ring assembly (see sketch below) were sheared in three places. The amount of shear force it would take to dislodge the riser sleeve along the three welds is calculated. This force is then translated to a linear ram force, in the following calculation.

Furthermore, this loading case would only occur if the pump is dislodged from the adapter plate/ring bond and subsequently gets stuck in the riser.

Subject: Maximum Allowable Hydraulic Ram Force for Heel Jet Removal, Tank 241-C-106 Page ____ of ____
Originator: Sam Paulsen Date: 1/2/03
Checker: Greg Lisle Date: 1/6/03

Sketch (Ref, H-2-41295)

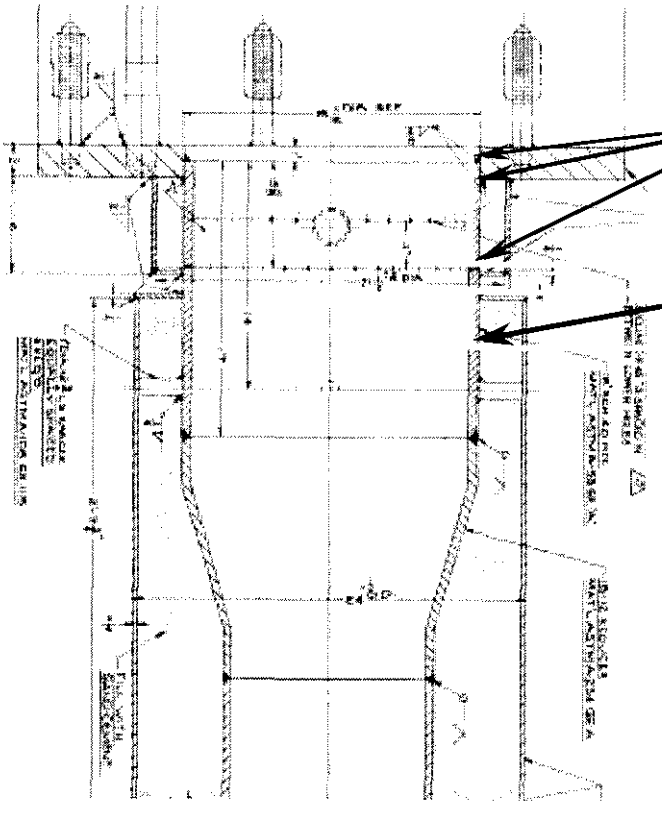

Three Welds Analyzed

Riser Sleeve

There are two 3/8" fillet welds and one 1/4" fillet weld about an 18" diameter (Ref. H-2-41295). They will all be considered 1/4" fillet welds for conservatism.

$t := .25 \cdot in$		Weld Throat
$\phi := 18in$		Riser Weld Diameter, H-2-41295
$P := \pi \cdot \phi$	$P = 56.55\,in$	Perimeter/ Weld Length
$WL_t := 3 \cdot P$	$WL_t = 169.65\,in$	Total Weld Length

Weld Strength Based on Filler Metal:

$F_W := 60000psi$ Strength of Filler Weld Material, Estimated as E60xx for conservatism

$S_{W1} := .3 \cdot F_W \cdot \sin(45 \cdot deg) \cdot t$ $S_{W1} = 3182 \frac{lbf}{in}$ Weld Strength (AISC Manual of Steel Construction, Table J2.5, pg. 5-70 and Sect. J2a pg. 5-67)

Weld Strength Based on Base Metal:

The allowable shear stress will be estimated upon the riser material (ASTM A-53, H-2-41295) yield strength for conservatism.

$F_y := 35000 \cdot psi$ *Yield Strength of A-53 Steel, (AISC Manual of Steel Construction, pg. 1-92)*

$f_a := .4 \cdot F_y$ $f_a = 14000\,psi$ Allowable Shear Stress (AISC Manual of Steel Construction, pg. 5-49)

$S_{W2} := f_a \cdot \sin(45 \cdot deg) \cdot t$ $S_{W2} = 2475 \frac{lbf}{in}$ Weld Strength (AISC Manual of Steel Construction, Table J2.5, pg. 5-70 and Sect. J2a pg. 5-67)

The weld strength based upon the base metal is the more conservative value, and is used to determine the allowable uplift force.

$F_{max} := S_{w2} \cdot P$ $\quad F_{max} = 139951\ lbf$ $\quad$ Maximum Uplift Force Based upon Weld Shear

This value is used to calculate the horizontal ram force that would result in the allowable shear.

Diagram and Variable Definition

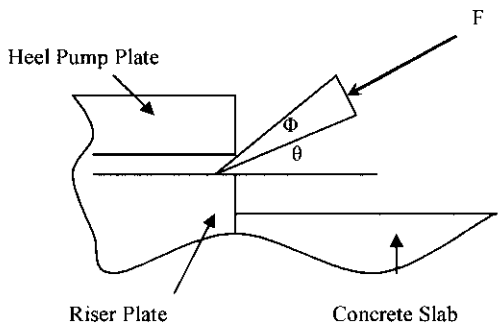

$\phi := 30 \cdot deg$ $\quad$ Fork Angle, Ref. H-14-105651

$\theta := 0$ $\quad$ The hydraulic ram is considered as acting at 0 deg for conservatism.

Free Body Diagram

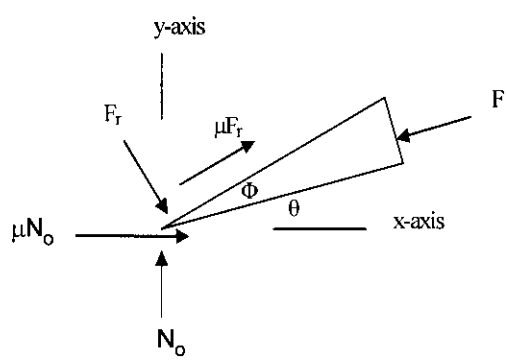

F_r - Resultant Force From Ram

N_o - Force Normal to Riser Plate Surface

$\mu := .42$ $\quad$ Coefficient of Sliding Friction Steel on Steel, Ref. Marks Handbook Table 3.2.3, pg. 3-22

$F_r := \frac{F_{max}}{2} \cdot \cos(\phi)$ $\quad$ F_r is the reaction force that results from actuation of two rams.

Static Equilibrium Force Equations

$\Sigma Fx = 0$

$\mu^* N_o + \mu^* F_r \cos(\phi+\theta) + F_r \sin(\phi+\theta) = F \cos(\theta)$ eqn. 1

$\Sigma Fy = 0$

$N_o + \mu^* Fr \sin(\phi+\theta) = F \sin(\theta) + F_r \cos(\phi+\theta)$ eqn. 2 ($\sin\theta = 0$ for $\theta = 0$)

$N_o := F_r \cdot \cos(\phi) - \mu \cdot F_r \cdot \sin(\phi)$ $\quad$ eqn. 2 rearranged to solve for N_o

$N_o = 39755\ lbf$

$F_1 := \mu \cdot N_0 + (\mu \cdot F_r \cdot \cos(\phi)) + F_r \cdot \sin(\phi)$ For this case $\theta = 0$, and rearrange the equation to solve for F (as F_1). (cos (0) = 1)

$F_1 = 69040\,\text{lbf}$ The maximum hydraulic ram force based upon the maximum uplift due to shearing the welds is 69040 lbf per ram assembly.

8.3 Maximum Linear Hydraulic Ram Force due to Allowable Concrete Wall Bearing

This calculation determines the maximum linear hydraulic ram force that can be imparted onto the system without failure of the concrete wall.

$F_{cw} := 7500 \cdot \text{lbf}$ Maximum Horizontal Concrete Wall Force Allowable, RPP-13984 (2002)

The Hydraulic Ram assemblies are acting on opposing walls, and therefore are not additive. Furthermore, the maximum horizontal force due to the hydraulic ram assembly will be achieved when the ram is acting at $\theta = 0$.

$F_2 := F_{cw}$ $F_2 = 7500\,\text{lbf}$

8.4 Maximum Linear Hydraulic Ram Force due to Allowable Horizontal Bearing

This was investigated in RPP-13775, Sec. 5.4. It was determined that at the maximum ram force of 18,000 lbf. the riser pump adapter ring would not dislodge. This indicates the riser adapter is capable of withstanding any horizontal forces imposed by the hydraulic ram assemblies. The minimum force due to horizontal bearing is:

$F_3 := 18000 \cdot \text{lbf}$

8.5 Downward Force Translated to Riser 13 Sleeve and Casing due to Hydraulic Ram Actuation

Due to the distance between the adapter plate edge and the weld-joint that connects the adapter plate to the riser sleeve, it is believed that the downward force by the hydraulic ram assemblies will be localized. Therefore, the force will disperse to the concrete below the adapter plate, and have very little translated effect to the riser sleeve or casing. Refer to drawings H-2-41345, H-2-41295, and below sketches for Riser 13 configuration.

The riser adapter ring was designed to allow concrete to be poured below the ring so as to provide a bearing surface. Based on this, it is fair to estimate that the casing will only see a force if the concrete bearing surface is crushed. Furthermore, the wedge tip will not act near the riser diameter based upon geometrical constraints. (see sketch below) The maximum ram stroke is 3.13" and the wedge tip resides approximately 1" from the adapter ring edge when fully retracted. Therefore, when the ram is at full stroke it can only penetrate approximately 2.5". The penetration will be at the very least 7.5" from the riser casing edge.

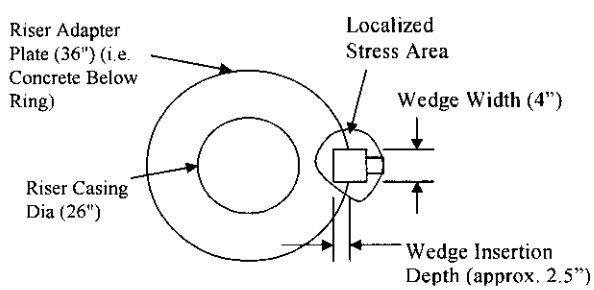

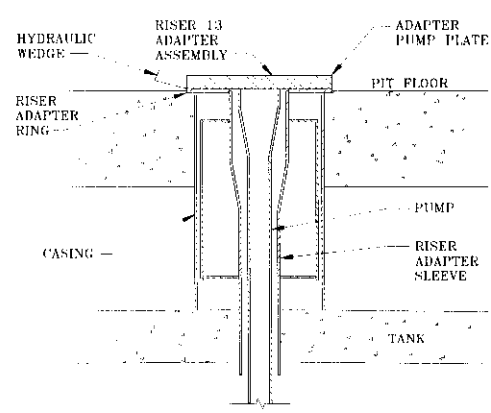

Based upon these observations there is no force translated to either the riser sleeve or casing due to hydraulic ram actuation.

8.6 Concrete Slab Shear, Due to Ram Actuation, Investigation

When the hydraulic ram assemblies are wedged between the riser adapter ring and pump adapter plate a downward normal force results. It is possible that a downward force could shear the concrete. If this happens it is possible to pull the riser out about the sheared area, as opposed to the entire floor slab (as calculated to a maximum of 8900 lbf in RPP-13864, 2002).

This calculation is conservative and will only take into account the force to shear the topping slab. The below values are not given dimensions because the governing formula is emperical (ACI 318/99 pg. 168). Therefore, all dimensions for d, D_r, D_s, and P are in inches, and f'_c is psi.

Sketch

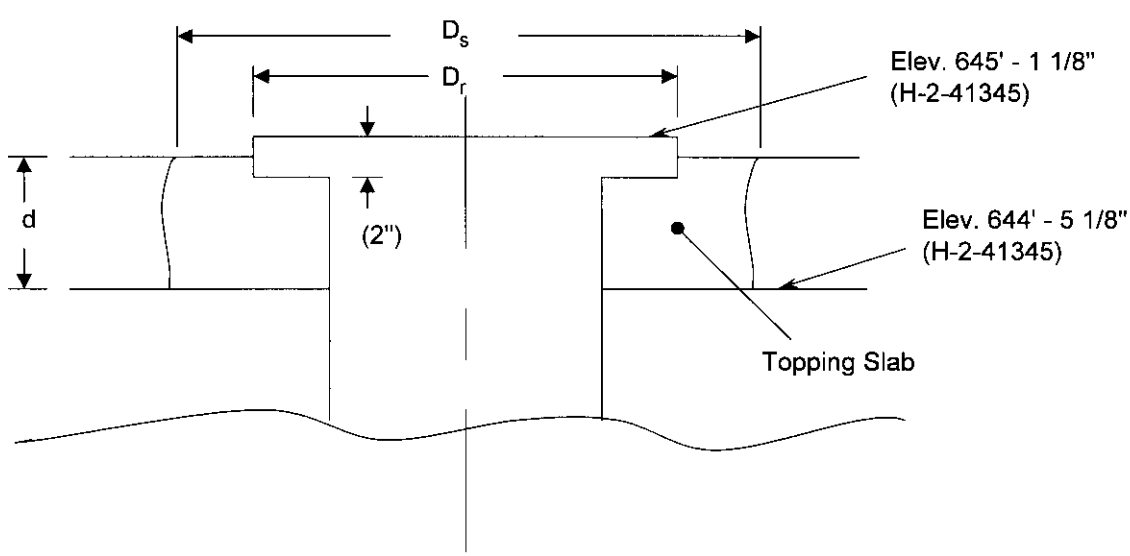

$d := 5$ in		Topping Slab Depth, Conservative (H-2-41345)
$D_r := 36$ in		Adapter Ring Diameter, (H-2-41295)
$D_s := D_r + d$	$D_s = 41$ in	Likely Shear Diameter (ACI 318/99 pg. 168)
$P := D_s \cdot \pi$	$P = 128.81$ in	Shear Perimeter
$f'_c := 3000$		Concrete 28-day Compressive Strength, (H-2-41345)
$V_c := 4 \cdot \left(\sqrt{f'_c} \cdot P \cdot d\right)$	$V_c = 141099$ lbf	Allowable Shear Force (ACI 318/99 pg. 168).

The allowable downward force due to shear is translated into a horizontal ram force below. (Both cylinders are operating)

Free Body Diagram

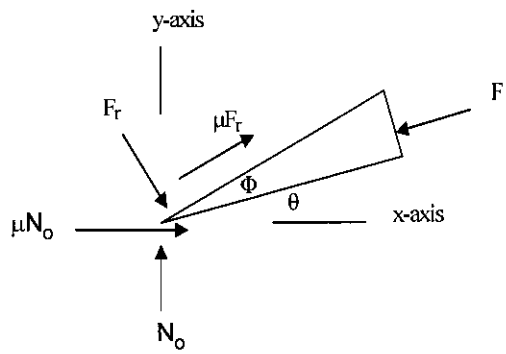

$\phi := 30 \cdot deg$ Fork Angle, Ref. H-14-105651

$\theta := 0$ The hydraulic ram is considered as acting at 0 deg for conservatism.

F_r - Resultant Force From Ram

N_o - Force Normal to Riser Plate Surface

$\mu := .42$ Coefficient of Sliding Friction Steel on Steel, Ref. Marks Handbook Table 3.2.3, pg. 3-22

$V_c := 1.411 \cdot 10^5 \cdot lbf$

$N_o := \frac{V_c}{2}$ N_o is the reaction force that results from actuation of two rams.

Static Equilibrium Force Equations

$\Sigma Fx = 0$

$\mu^* N_o + \mu^* Fr \cos(\phi+\theta) + Fr \sin(\phi+\theta) = F \cos(\theta)$ eqn. 1

$\Sigma Fy = 0$

$N_o + \mu^* Fr \sin(\phi+\theta) = F \sin(\theta) + Fr \cos(\phi+\theta)$ eqn. 2 ($\sin\theta = 0$ for $\theta = 0$)

$F_r := \frac{N_o}{\cos(\phi) - \mu \cdot \sin(\phi)}$ $F_r = 316350\,lbf$ eqn. 2 rearranged to solve for F_r in terms of N_o

$F_4 := \mu \cdot N_o + (\mu \cdot F_r \cdot \cos(\phi)) + F_r \cdot \sin(\phi)$ For this case $\theta = 0$, and rearrange the equation to solve for F (as F_4). (cos (0) = 1)

$F_4 = 302872\,lbf$ The maximum allowable hydraulic ram force based upon concrete shear is 302872 lbf per ram assembly.

8.7 Maximum Pressure Calculation

The maximum pressure that can be imparted into the hydraulic ram pump is calculated using the limiting factor for force input. This correlates to the maximum force value calculated in section 8.3 of this calculation.

$F_{max} := F_2$ Maximum Limiting Force (Due to Wall Force Limit, Sec. 8.3)

$A := 1.77 \cdot in^2$ Cylinder Effective Area, Ref. Attachment A, pg. 2, Model RD-93

$P_{max} := \frac{F_{max}}{A}$ $P_{max} = 4237\,psi$ Maximum Pump Pressure

Attachment A:

Enerpac Cut Sheet

RD-Series, Precision Production Cylinders

ENERPAC
Hydraulic Technology Worldwide

▼ Shown from left to right: RD-2510, RD-96, RD-256, RD-41, RD-166

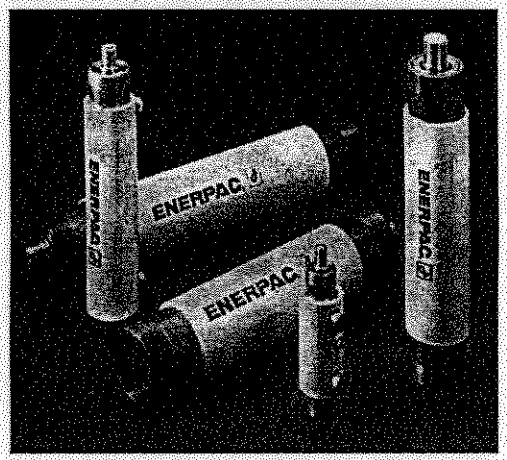

High Precision and High Cycle Performance

Golden Ring Design
Enerpac RD-Cylinders are provided with the Golden Ring Design, for long, trouble-free performance.

- Designed for long life, the best choice for production applications
- Unique mounting configurations simplify fixturing
- Baked enamel finish for increased corrosion resistance
- Double-acting operation develops force in both directions, providing maximum versatility
- Plunger wiper reduces contamination, extending cylinder life

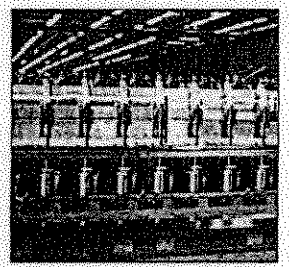

This paper mill uses RD cylinders for precision when trimming. ▶

Nominal Cylinder Capacity (tons)	Stroke (in)	Model Number	Max. Cylinder Capacity (tons) Advance	Max. Cylinder Capacity (tons) Retract	Cylinder Effective Area (in²) Advance	Cylinder Effective Area (in²) Retract	Oil Capacity (in³) Advance	Oil Capacity (in³) Retract	Coll. Height A (in)	Ext. Height B (in)	Body Length C (in)	Out. Dia. D (in)	Cyl. Bore Dia. E (in)	Plgr. Dia. F (in)
4	1.13	RD-41	4	2	.79	.34	.88	.39	7.31	8.44	6.38	2.00	1.00	.75
	3.13	RD-43	4	2	.79	.34	2.45	1.07	9.31	12.44	8.38	2.00	1.00	.75
	6.13	RD-46	4	2	.79	.34	4.81	2.10	12.31	18.44	11.38	2.00	1.00	.75
9	1.13	RD-91	9	5	1.77	.98	1.99	1.10	8.75	9.88	7.80	2.50	1.50	1.00
	3.13	RD-93	9	5	1.77	.98	5.52	3.07	10.78	13.91	9.80	2.50	1.50	1.00
	6.13	RD-96	9	5	1.77	.98	10.82	6.01	13.78	19.91	12.80	2.50	1.50	1.00
	10.13	RD-910	9	5	1.77	.98	17.89	9.94	17.78	27.91	16.81	2.50	1.50	1.00
16	6.25	RD-166	16	8	3.14	1.66	19.63	10.35	15.31	21.56	14.13	3.00	2.00	1.38
	10.25	RD-1610	16	8	3.14	1.66	32.20	16.98	19.31	29.56	18.11	3.00	2.00	1.38
25	6.25	RD-256	25	11	4.91	2.15	30.68	13.42	16.69	22.94	15.63	3.63	2.50	1.88
	10.25	RD-2510	25	11	4.91	2.15	50.31	22.01	20.69	30.94	19.61	3.63	2.50	1.88

Double-Acting, Precision Production Cylinders

▼ RD CYLINDER ATTACHMENTS

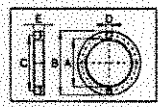

Retainer Nut
For locking foot or flange mountings. Tightens onto cylinder collar threads (included with foot and flange mounting kits)

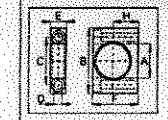

Foot Mounting
Mounts onto cylinder collar

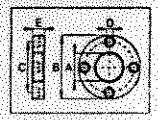

Flange Mounting
Mounts onto cylinder collar

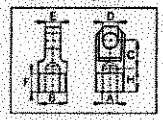

Clevis Eye
Threads onto plunger or into cylinder base

Model Number	RD-Cyl. (tons)	Dimensions (in) A	B	C	D	E	F	H
Foot Mounting with Retainer Nut								
AD-141	4	1.38	3.00	2.00	.41	.76	2.25	1.25
AD-171	9	2.00	4.00	2.88	.53	1.00	3.25	1.75
AD-181	16	2.63	5.00	3.76	.78	1.38	4.00	2.06
AD-191	25	3.25	6.25	4.62	1.03	1.76	4.88	2.50
Flange Mounting with Retainer Nut								
AD-142	4	1.38	3.88	3.09	.41	.75	–	–
AD-172	9	2.00	4.75	3.88	.41	1.00	–	–
AD-182	16	2.63	5.63	4.56	.53	1.38	–	–
AD-192	25	3.25	6.50	5.34	.66	1.75	–	–
Retainer Nut								
AD-143	4	1 1/4"-12 UNF	2.25	1.81	.25	.38	–	–
AD-173	9	2"-12	3.00	2.50	.27	.50	–	–
AD-183	16	2 5/16"-16	3.63	3.12	.27	.75	–	–
AD-193	25	3 1/4"-16	4.25	3.75	.27	1.00	–	–
Clevis Eye*								
AD-150	4	1/2"-20	1 1/4"-20	52.4	.63	.63	.75	23.8
AD-151	9	3/4"-16	1 11/16"-18	57.1	.75	1.00	1.00	23.8
AD-152	16	1 1/4"-12	2 7/16"-16	77.8	1.00	1.25	1.00	30.2
AD-153	25	1 1/2"-12	2 3/4"-16	77.8	1.25	1.50	1.00	27.0

RD Series

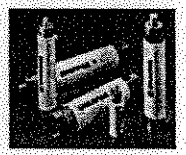

Capacity:
4-25 tons

Stroke:
1.13-10.25 inch

Maximum Operating Pressure:
10,000 psi

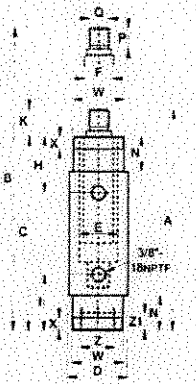

Top to Ret. Port H (in)	Bottom to Adv. Port I (in)	Plunger Protrusion K (in)	Neck Length N (in)	Plunger Thread Length P (in)	Plunger External Thread Q (in)	Cylinder Mounting Dimensions (in): Collar Thread W	Collar Thread Length X	Int. Base Thread Z	Int. Base Thread Length Z1	Pin to Pin with Clevis Eyes Fitted*	Weight (lbs)	Model Number
1.84	1.84	.94	1.13	.75	1/2"-20	1 3/4"-12	.44	1 1/8"-20	.35	10.15	4.8	RD-41
1.84	1.84	.94	1.13	.75	1/2"-20	1 3/4"-12	.44	1 1/8"-20	.35	12.15	6.4	RD-43
1.84	1.84	.94	1.13	.75	1/2"-20	1 3/4"-12	.44	1 1/8"-20	.35	15.15	9.0	RD-46
2.25	2.25	.98	1.50	.75	3/4"-16	2"-12	.56	1 11/16"-18	.55	11.76	9.0	RD-91
2.25	2.25	.98	1.50	.75	3/4"-16	2"-12	.56	1 11/16"-18	.55	13.79	11.0	RD-93
2.25	2.25	.98	1.50	.75	3/4"-16	2"-12	.56	1 11/16"-18	.55	16.79	14.0	RD-96
2.25	2.25	.98	1.50	.75	3/4"-16	2"-12	.56	1 11/16"-18	.55	20.79	19.0	RD-910
2.88	2.88	1.19	2.13	1.00	1 1/4"-12	2 5/8"-16	.88	2 7/16"-16	.94	20.31	22.0	RD-166
2.88	2.88	1.19	2.13	1.00	1 1/4"-12	2 5/8"-16	.88	2 7/16"-16	.94	24.31	29.0	RD-1610
3.50	3.50	1.06	2.75	1.00	1 1/2"-12	3 1/4"-16	1.13	2 9/16"-16	1.02	20.73	36.0	RD-256
3.50	3.50	1.06	2.75	1.00	1 1/2"-12	3 1/4"-16	1.13	2 9/16"-16	1.02	24.73	46.0	RD-2510

ATTACHMENT A: PAGE 2 OF 2