SEP 25 2002 Sta. 15

ENGINEERING DATA TRANSMITTAL

1. EDT 634914

2. To: (Receiving Organization) Distribution	3. From: (Originating Organization) ATCD Project	4. Related EDT No.: N/A
5. Proj./Prog./Dept./Div.: HPAB0271 ATCD Project	6. Design Authority/Design Agent/Cog. Engr.: W.F. Zuroff/N/A/J.N. Winters	7. Purchase Order No.: N/A
		9. Equip./Component No.: N/A
8. Originator Remarks: This document provides results of preliminary engineering for closure of the five ATCD Tanks (241-C-106, 241-C-201, 241-C-202, 241-C-203, and 241-C-204).		10. System/Bldg./Facility: N/A
		12. Major Assm. Dwg. No.: N/A
11. Receiver Remarks:	11A. Design Baseline Document? ☒ Yes ☐ No	13. Permit/Permit Application No.: N/A
		14. Required Response Date: N/A

15. DATA TRANSMITTED

(A) Item No.	(B) Document/Drawing No.	(C) Sheet No.	(D) Rev. No.	(E) Title or Description of Data Transmitted	(F) Approval Designator	(G) Reason for Transmittal	(H) Originator Disposition	(I) Receiver Disposition
1	RPP-12331		0	Accelerated Tank Closure Demonstration Basis of Design	E	2	1	1

16. KEY

Approval Designator (F)	Reason for Transmittal (G)		Disposition (H) & (I)	
E, S, Q, D OR N/A (See WHC-CM-3-5, Sec. 12.7)	1. Approval 2. Release 3. Information	4. Review 5. Post-Review 6. Dist. (Receipt Acknow. Required)	1. Approved 2. Approved w/comment 3. Disapproved w/comment	4. Reviewed no/comment 5. Reviewed w/comment 6. Receipt acknowledged

17. SIGNATURE/DISTRIBUTION (See Approval Designator for required signatures)

(G) Reason	(H) Disp.	(J) Name	(K) Signature	(L) Date	(M) MSIN	(G) Reason	(H) Disp.	(J) Name	(K) Signature	(L) Date	(M) MSIN
1	1	Design Authority W.F. Zuroff		9/24/02	37-39	1	1	E.A. Fredenburg	E Fredenburg	9/20/02	H9-03
		Design Agent				1	1	T.A. Lee		9-20-02	H9-02
1	1	Cog. Eng. J.N. Winters		9/20/02	H9-02	1	1	D.W. Strasser		9/24/2002	T4-01
1	1	Cog. Mgr. M.J. Riess		9/24/02	H9-03	1	1	R.D. Smith		9/20/02	R1-49
1	1	QA J.J. Verderber		9-20-02	T4-07	1	1	G.J. Kelmel		9/20/02	S0-11
		Safety									
1	1	Env. G.T. Wells		9/20/02	H9-03						

18.	19.	20.	21. DOE APPROVAL (if required)
J.N. Winters 9/25/02 Signature of EDT Originator — Date	M. Jarayssi 9/25/02 Authorized Representative for Receiving Organization — Date	M.J. Riess 9/25/02 Design Authority/ Cognizant Manager — Date	Ctrl No. _____ ☐ Approved ☐ Approved w/comments ☐ Disapproved w/comments

DISTRIBUTION SHEET

To	From	Page 1 of 2
Waste Dispositioning	Single Shell Tank Projects	Date Sept 25, 2002
Project Title/Work Order Accelerated Tank Closure Demonstration Basis of Design		EDT No. 634914
		ECN No. NA

Name	MSIN	Text With All Attach.	Text Only	Attach./ Appendix Only	EDT/ECN Only
Central Files H	B1-07	x			
S.W. Callison	H9-03	x			
J.W. Cammann	H6-22	x			
E.J. Cruz	H6-60	x			
R.E. Day	H9-03	x			
M.T. Ellsworth	H9-03	x			
M.J. Galgoul	H9-03	x			
A.J. Knepp	H0-22	x			
M.R. Landon	S7-65	x			
R.W. Lober	H6-60	x			
J.J. Luke	H9-03	x			
G.J. McCallum	H9-03	x			
L. McClure	B2-05	x			
C. Miller	H9-03	x			
F.R. Miera Jr.	R1-51	x			
E.A. Pacquet	R1-51	x			
S.M. O'Toole	S7-65	x			
T.L. Sams	H6-22	x			
R.R. Thompson	H6-22	x			
W.T. Thompson	S7-90	x			
G.T. Wells	H9-03	x			
W.F. Zuroff	S7-24	x			
R.C. Wilson	H9-03	x			
J.N. Winters	H9-03	x			
S.K. Muns	H9-03	x			
T.A. Lee	H9-03	x			
C.C. Henderson	B2-05	x			
D. Strasser	T4-01	x			
G. Kelmel	S0-11	x			
R. Smith	R1-49	x			
E.A. Fredenburg	H9-03	x			
M.J. Riess	H9-03	x			

DISTRIBUTION SHEET

To	From	Page 2 of 2
Waste Dispositioning	Single Shell Tank Projects	Date Sept. 25, 2002
Project Title/Work Order Accelerated Tank Closure Demonstratin Basis of Design		EDT No. 634914
		ECN No. NA

Name	MSIN	Text With All Attach.	Text Only	Attach./ Appendix Only	EDT/ECN Only
J. Verderber	T4-07	x			

S

Accelerated Tank Closure Demonstration Basis of Design

E.A. Fredenburg; J.N. Winters; C.C. Henderson
CH2M HILL Hanford Group Inc.; Columbia Energy and Environmental Services
Richland, WA 99352
U.S. Department of Energy Contract DE-AC27-99RL14047

EDT/ECN: 634914 UC: 2000
Cost Center: 7P700 Charge Code: 116707/ B000
B&R Code: N/A Total Pages: 328

Key Words: Basis of Design, Closure, Accelerated Tank Closure Demonstration, Preliminary Engineering, 241-C-106, 241-C-201, 241-C-202, 241-C-203, 241-C-204

Abstract: The ATCD Basis of Design presents the results of preliminary engineering for closure of the five ATCD tanks (241-C-106, C-201, C-202, C-203 & C-204). This report provides conceptual layout, enabling assumptions, initial conditions, project descriptions, sketches, preliminary budgetary estimate of construction costs and estimated project schedule describing the tank closure project approach.

TRADEMARK DISCLAIMER. Reference herein to any specific commercial product, process, or service by trade name, trademark, manufacturer, or otherwise, does not necessarily constitute or imply its endorsement, recommendation, or favoring by the United States Government or any agency thereof or its contractors or subcontractors.

Printed in the United States of America. To obtain copies of this document, contact: Document Control Services, P.O. Box 950, Mailstop H6-08, Richland WA 99352, Phone (509) 372-2420; Fax (509) 376-4989.

SEP 25 2002
DATE:
STA: 15
HANFORD RELEASE
ID: 20

Janis Aardal 9-25-02
Release Approval Date

Release Stamp

Approved For Public Release

ACCELERATED TANK CLOSURE DEMONSTRATION BASIS OF DESIGN

September 24, 2002

Prepared For
CH2M HILL Hanford Group, Inc.
Richland, Washington

Prepared By
Columbia Energy and Environmental Services, Inc.
Richland, Washington

This page intentionally left blank.

EXECUTIVE SUMMARY

This *Accelerated Tank Closure Demonstration Basis of Design* report provides a planning basis for the delivery, production, and placement of waste stabilization and fill material in the five Hanford Site Accelerated Tank Closure Demonstration tanks. This planning basis will support follow-on design development for tank closure. The placement of material in the tanks will be conducted in two phases with the first phase designed to stabilize the residual waste heel remaining in the tanks with grout. If authorized, the second phase of tank fill involves the placement of grout to fill the remaining void spaces within the tank to minimize water infiltration, prevent long-term degradation of the tank farm surface barrier due to subsidence, and discourage intruder access. The concept developed in the report is based on stabilizing the residual waste and filling the remaining void spaces within tank 241-C-106 by March 30, 2004 and the remaining 241-C farm 200-series tanks by December 31, 2004. However, there could be a long time delay between the first and second phases pending resolution of regulatory and stakeholder issues.

The scope described in this report addresses the waste stabilization and tank fill portions of the overall Accelerated Tank Closure Demonstration Project. Waste stabilization and tank fill activities would take place following completion of the planned waste retrieval activities. The major steps involved include pre-stabilization activities; waste stabilization; bulk tank fill which includes filling in-tank equipment, risers, and at-tank pits; and post-stabilization activities. In-tank equipment would only be removed if required for access, otherwise in-tank equipment would be disposed of in-place. Based on the project schedule and enabling assumptions a portable continuous mixing grout plant would be mobilized to a staging area adjacent to the tank farm. From this location grout materials would be mixed together as needed and pumped to the tank via an overground slickline or pipe.

The rough order-of-magnitude estimate of the cost for stabilizing and filling the five demonstration tanks is approximately $18.1 million. This estimate is not a total project cost and needs to be considered within the context of supporting activities within the Accelerated Tank Closure Demonstration Project.

This page intentionally left blank.

CONTENTS

1.0 INTRODUCTION 1-1
1.1 PROGRAM MISSION 1-1
1.2 ACCELERATED TANK CLOSURE DEMONSTRATION PROJECT 1-1
1.3 REPORT SCOPE 1-1
1.4 OTHER ONGOING ACCELERATED TANK CLOSURE DEMONSTRATION PROJECT ACTIVITIES 1-3

2.0 ENABLING ASSUMPTIONS 2-1
2.1 KEY ASSUMPTIONS 2-1
2.2 SUPPORTING ASSUMPTIONS 2-2

3.0 INITIAL CONDITIONS 3-1
3.1 241-C TANK FARM 3-1
3.1.1 General 241-C Tank Farm Description 3-1
3.1.2 241-C Tank Farm Adjacent Areas Description 3-1
3.1.3 241-C Tank Farm Ancillary Equipment 3-1
3.1.4 241-C Tank Farm Constraints 3-1
3.1.5 241-C Tank Farm Site Support Services 3-5
3.2 TANK 241-C-106 3-6
3.2.1 General Tank 241-C-106 Description 3-6
3.2.2 Tank 241-C-106 Constraints 3-6
3.2.3 Tank 241-C-106 Residual Waste Heel 3-9
3.2.4 Tank 241-C-106 Pit and Riser Access 3-9
3.2.5 Tank 241-C-106 Pipelines Accessing Tank 3-11
3.2.6 Tank 241-C-106 In-Tank Equipment 3-12
3.2.7 Tank 241-C-106 Ventilation System 3-12
3.2.8 Tank 241-C-106 Instrumentation 3-13
3.3 241-C FARM 200-SERIES TANKS 3-15
3.3.1 241-C Farm 200-Series General Tank Description 3-15
3.3.2 241-C Farm 200-Series Tanks Constraints 3-15
3.3.3 241-C Farm 200-Series Tanks Ventilation System 3-16
3.4 TANK 241-C-201 3-16
3.4.1 Tank 241-C-201 Residual Waste Heel 3-16
3.4.2 Tank 241-C-201 Pit and Riser Access 3-16
3.4.3 Tank 241-C-201 Pipelines Accessing Tank 3-17
3.4.4 Tank 241-C-201 In-Tank Equipment 3-17
3.4.5 Tank 241-C-201 Instrumentation 3-17
3.5 TANK 241-C-202 3-17
3.5.1 Tank 241-C-202 Residual Waste Heel 3-17
3.5.2 Tank 241-C-202 Pit and Riser Access 3-18
3.5.3 Tank 241-C-202 Pipelines Accessing Tank 3-18
3.5.4 Tank 241-C-202 In-Tank Equipment 3-18
3.5.5 Tank 241-C-202 Instrumentation 3-19

3.6 TANK 241-C-203 3-19
3.6.1 Tank 241-C-203 Residual Waste Heel 3-19
3.6.2 Tank 241-C-203 Pit and Riser Access 3-19
3.6.3 Tank 241-C-203 Pipelines Accessing Tank 3-20
3.6.4 Tank 241-C-203 In-Tank Equipment 3-20
3.6.5 Tank 241-C-203 Instrumentation 3-21
3.7 TANK 241-C-204 3-21
3.7.1 Tank 241-C-204 Residual Waste Heel 3-21
3.7.2 Tank 241-C-204 Pit and Riser Access 3-21
3.7.3 Tank 241-C-204 Pipelines Accessing Tank 3-22
3.7.4 Tank 241-C-204 In-Tank Equipment 3-22
3.7.5 Tank 241-C-204 Instrumentation 3-23

4.0 PROJECT REGULATORY AND TECHNICAL REQUIREMENTS 4-1
4.1 REGULATORY REQUIREMENTS (DRIVERS) 4-1
4.1.1 RCRA Requirements 4-1
4.1.2 DOE O 435.1 Requirement 4-2
4.1.3 10 CFR 61 Performance Objectives 4-4
4.1.4 10 CFR 830 Performance Objectives 4-4
4.1.5 National Environmental Policy Act Performance Limitations 4-4
4.2 TECHNICAL REQUIREMENTS 4-4
4.2.1 Waste Heel Stabilization Material 4-5
4.2.2 Tank Fill Material 4-5
4.3 AIR PERMITTING REQUIREMENTS 4-6

5.0 PROJECT BOUNDARIES AND INTERFACES 5-1

6.0 PROJECT AND OPERATIONAL DESCRIPTION 6-1
6.1 PRE-GROUTING ACTIVITIES 6-2
6.1.1 Removal and/or Disposition of In-Tank Equipment 6-2
6.1.2 Utilities Modifications/Upgrades 6-3
6.1.3 Instrumentation System Modifications 6-4
6.1.4 Modification of Existing Pits 6-4
6.1.5 Ventilation System 6-5
6.1.6 Isolation of Piping and Ancillary Equipment 6-6
6.1.7 241-C Tank Farm Access and Staging Modifications 6-6
6.2 DELIVERY AND PLACEMENT SYSTEM – PHASE 1 6-7
6.2.1 Waste Stabilization/Encapsulation 6-7
6.2.2 Fill System Control Parameters 6-7
6.2.3 Demonstration-Required Monitoring and Sampling 6-8
6.3 DELIVERY AND PLACEMENT SYSTEM – PHASE 2 6-8
6.3.1 Bulk Tank Fill 6-9
6.3.2 In-Tank Equipment Specific Stabilization/Encapsulation 6-9
6.3.3 Fill System Control Parameters 6-11
6.3.4 Demonstration Required Monitoring, Sampling, and Instrumentation 6-12
6.3.5 Data Collection During and After Tank Fill Operations 6-12

6.4 POST-GROUTING ACTIVITIES 6-13

7.0 PROJECT DEVELOPMENT AND EVALUATION OF OPTIONS 7-1

8.0 COST AND SCHEDULE 8-1
8.1 ESTIMATE RATES AND FACTORS 8-1
8.2 ESTIMATE SUMMARY 8-1
8.3 ESTIMATING ASSUMPTIONS AND EXCLUSIONS 8-2
8.4 BASIS OF ESTIMATE 8-2
8.5 PROJECT RISK EVALUATION AND CONTINGENCY ANALYSIS 8-3
8.6 PROJECT SCHEDULE 8-3

9.0 REFERENCES 9-1

APPENDICES

A COST AND SCHEDULE DETAIL ..... A-i
B APPLICABLE SPECIFICATIONS ..... B-i
C CALCULATIONS ..... C-i
D LEVEL 2 SPECIFICATION COMPLIANCE MATRIX ..... D-i
E GROUT DELIVERY/PLACEMENT CONCEPT SELECTION ..... E-i
F SKETCHES ..... F-i
G REVIEW DOCUMENTATION ..... G-i

FIGURES

3.1. Location Map of 241-C Tank Farm and Surrounding Facilities in the 200 East Area 3-2
3.2. 241-C Farm 100-Series Tank Cross-Section 3-3
3.3. 241-C Farm 200-Series Tank Cross-Section 3-4
3.4. Tank 241-C-106 Plan and Section Views 3-7
3.5. Tank 296-C-006 Ventilation System 3-14

TABLES

3.1. Tank 241-C-106 Riser Configuration 3-10
3.2. Tank 241-C-106 Existing Instrumentation Signals 3-13
3.3. Tank 241-C-201 Riser Configuration 3-16
3.4. Tank 241-C-202 Riser Configuration 3-18
3.5. Tank 241-C-203 Riser Configuration 3-20
3.6. Tank 241-C-204 Riser Configuration 3-22
6.1. In-Tank Equipment/Riser Void Space 6-11
8.1. Summary of Accelerated Tank Closure Demonstration Cost Estimate for Tank Closure Activities 8-2

LIST OF TERMS

AC	Administrative Control
ATCD	Accelerated Tank Closure Demonstration
CH2M HILL	CH2M HILL Hanford Group, Inc.
DOE	U.S. Department of Energy
FY	fiscal year
HEPA	high-efficiency particulate air
HFFACO	*Hanford Federal Facility Agreement and Consent Order*
HLW	high-level waste
HVAC	heating, ventilation, and air conditioning
LCO	Limiting Condition for Operation
LLW	low-level waste
NEPA	*National Environmental Policy Act of 1969*
RCRA	*Resource Conservation and Recovery Act of 1976*
SST	single-shell tank
TCFS	tank closure fill system
TMACS	tank monitoring and control system
TSR	Technical Safety Requirement
WBS	work breakdown structure
WIR	waste incidental to reprocessing

1.0 INTRODUCTION

1.1 PROGRAM MISSION

The mission of the U.S. Department of Energy (DOE) Office of River Protection River Protection Project is to retrieve and treat Hanford Site tank waste and close the tank farms to protect the Columbia River. Cleanup of the Hanford Site, including the single-shell tank (SST) farms, is governed by the *Hanford Federal Facility Agreement and Consent Order* (HFFACO; Ecology et al. 1989).

The mission of the SST Program is to retrieve waste from SSTs and prepare the tank farms for closure in a safe, regulatory compliant and economical manner. The SST system includes 12 individual SST farms that contain 149 mixed high-level waste (HLW) storage tanks, ancillary equipment, miscellaneous underground storage tanks, miscellaneous facilities, and soils contaminated from past leaks and spills located in the 200 East and 200 West Areas. Most of the SST system is located within the 12 tank farms; however, there are components of the system that are located outside the tank farm boundaries (e.g., transfer lines, support facilities). Because of the size and number of components associated with the SST farms, a number of closure-related actions will have to be taken over a period of years to implement closure on a tank farm basis. There are a number of challenges to closing the SST farms. These challenges and the uncertainties associated with tank closure are discussed in *Single-Shell Tank System Closure Work Plan* (DOE/ORP-2001-18).

The principal regulatory requirements for closure of the SST farms are the Washington State "Hazardous Waste Management Act" and its implementing requirements "Dangerous Waste Regulations" (WAC 173-303). DOE closure requirements are governed by *Radioactive Waste Management* (DOE O 435.1) under the *Atomic Energy Act of 1954*.

1.2 ACCELERATED TANK CLOSURE DEMONSTRATION PROJECT

In 2002, the Office of River Protection established the Accelerated Tank Closure Demonstration (ATCD) Project to support the SST Project mission by demonstrating the closure process through technology demonstrations to support waste retrieval and tank closure decisions. The ATCD Project will establish and demonstrate the technical, regulatory, and administrative aspects of retrieval and interim or operational closure and provide important data needed to support future tank and tank farm closure decisions.

Execution of the ATCD Project includes conducting a number of planning and project definition activities in parallel. These activities include the *Resource Conservation and Recovery Act of 1976* (RCRA) and DOE closure plans, alternatives generation analysis, preliminary engineering activities associated with waste retrieval, and the tank closure preliminary engineering activities documented in this Basis of Design report.

1.3 REPORT SCOPE

This Basis of Design report documents the results of preliminary engineering efforts to define tank closure activities and to provide a basis for detailed tank closure design. The activities

covered by this report follow the waste retrieval activities and include stabilizing the residual waste heel and filling the tank and in-tank ancillary equipment with stabilizing material. This report, in combination with the functions and requirements, provides a planning basis for closing the five demonstration tanks 241-C-106, 241-C-201, 241-C-202, 241-C-203, and 241-C-204. The report includes the following:

- Preliminary list of technical and regulatory requirements
- Preliminary strategy for the delivery, production, and placement of material to stabilize the residual waste remaining in the demonstration tanks following waste retrieval activities
- Preliminary strategy for the delivery, production, and placement of material to fill the tank and provide long-term stability to the tank structure
- Preliminary equipment outlines
- Rough order of magnitude cost estimate and project schedule.

The tank closure approach described in this ATCD Basis of Design report is based on a thorough engineering evaluation of options for delivery, production, and placement of material in the demonstration tanks and meets the performance specifications defined in *Tank Closure Fill System for the Accelerated Tank Closure Demonstration Level 2 Specification* (RPP-11094). The proposed tank closure approach utilizes readily available materials, equipment, and technologies that have either been deployed at other DOE sites or are routinely deployed in the commercial sector.

The scope of tank closure activities addressed in this Basis of Design report includes the following:

- Placement of an initial layer of grout to stabilize the residual waste heel
- Disposition of in-tank equipment
- Placement of additional grout to fill the remaining space in the tank to the top of the tank dome
- Isolation of the tank and ancillary equipment
- Restoration of tank farm surfaces disturbed during tank closure
- Placement or identification of benchmarks to monitor for potential subsidence.

1.4 OTHER ONGOING ACCELERATED TANK CLOSURE DEMONSTRATION PROJECT ACTIVITIES

A number of ATCD Project activities are being performed parallel with preliminary engineering for tank closure. These activities are related to, or have a direct tie to, preliminary engineering and were conducted in parallel because of the accelerated project schedule. These other activities include the following:

- Alternatives generation analysis for retrieval and closure
- Preliminary engineering for waste retrieval
- Tank-specific closure plans for radiological and hazardous waste
- ATCD data assessment.

To facilitate development of preliminary engineering definition of the tank closure system enabling assumptions were made and project interfaces defined before completion of the planning, alternative evaluation, regulatory review, and decision making. The enabling assumptions are identified in Section 2.0 and provide a basis for developing engineering detail such as space requirements, material handling, and delivery systems. Project interfaces are described in Section 5.0.

Based on ongoing waste stabilization grout mix development and evaluations and regulatory negotiations, there is a potential that the specifications for waste heel stabilization will be modified to include chemical pretreatment of the residual waste prior to or as an integral part of waste stabilization activities. One potential method for pretreating the residual waste would be to use chemical getters to immobilize specific contaminants of concern. The getters could be in a granular form and placed into the tank prior to stabilization or incorporated directly into the grout. Placement of granular material would require additional equipment and operating steps to those described in Section 6.0. Blending getters into the stabilizing grout mix could be directly accommodated with the approach described in Section 6.0. These changes, following incorporation into the Level 2 Specification, will be addressed during detail design.

This ATCD Basis of Design report follows the following document structure:

- **Section 1.0** – Introduction to the Basis of Design report.
- **Section 2.0** – Enabling assumptions made to allow completion of the preliminary engineering.
- **Section 3.0** – Initial conditions describes the five demonstration tanks and the anticipated configuration of the tanks when closure activity will be initiated.
- **Section 4.0** – Project technical regulatory requirements are described.
- **Section 5.0** – Project boundaries and interfaces with other ongoing and planned projects are described.
- **Section 6.0** – Project and operational description is provided for the tank fill system and the operational strategy developed for stabilizing waste residuals and filling the tanks.

- **Section 7.0** – Project development and evaluation of options describes the concepts considered and the evaluation process used to select a single tank fill approach for the Basis of Design report.
- **Section 8.0** – Cost and schedule.
- **Section 9.0** – References.
- **Appendix A** – Cost and schedule detail includes a work breakdown structure (WBS), project schedule, and cost estimate details.
- **Appendix B** – Applicable specifications.
- **Appendix C** – Calculations performed to support ongoing development.
- **Appendix D** – Level 2 Specification compliance matrix provides a crosswalk of the Level 2 Specification to the design concept.
- **Appendix E** – Grout delivery/placement concept selection provides a detailed description of the process used to identify and select the grout delivery and placement concept described in the Basis of Design report.
- **Appendix F** – Sketches developed for the tank closure concept.
- **Appendix G** – Review documentation describes the review process and includes signed-off review comment records from each of the reviewers.

2.0 ENABLING ASSUMPTIONS

This section describes the assumptions made to enable completion of preliminary engineering and development of the basis of design. The assumptions are presented in two categories:

- **Key assumptions** - those enabling assumptions fundamental to the tank closure approach
- **Supporting assumptions** - those enabling assumptions that establish conditions or actions that will be taken.

The assumptions identified do not represent project decisions. Decisions made subsequent to this Basis of Design report that do not agree with the decisions in this section will affect the technical approach, cost, and schedule to varying degrees and would require assessment on an individual basis.

2.1 KEY ASSUMPTIONS

Key assumptions used in developing the technical approach and schedule contained in this report include the following:

- Tank waste retrieval will be completed prior to initiating waste stabilization.
- All regulatory and DOE approvals will be obtained prior to initiating tank closure actions.
- Residual tank waste will be classified as Waste Incidental to Reprocessing (WIR) and will be managed as low-level waste (LLW).
- Grout will be used to stabilize the residual waste heel and provide for bulk filling of a tank. Grout used to stabilize the residual waste may include reagents to treat/stabilize contaminants. Bulk filling of the tank will physically stabilize the empty tank space, discourage intruder access, and minimize the potential for future subsidence.
- Residual tank waste, following stabilization, will be compliant with land disposal requirements.
- Tanks 241-C-106, 241-C-201, 241-C-202, 241-C-203, and 241-C-204 with their associated ancillary equipment are to be closed by the ATCD Project. Ancillary equipment to be considered for the ATCD Project is limited to the tank risers and associated at-tank pits and waste pipelines that directly access the tank interior space.
- The tanks will be filled with grout in a series of lifts in two separate phases. Phase 1 involves the initial grout placement to stabilize the residual waste heel that is expected to remain following retrieval. Phase 2 involves filling the remaining tank void space to the tank dome for the purpose of minimizing water infiltration, preventing long-term degradation of the tank farm surface barrier due to subsidence, and discouraging intruder access. It is important to note that the second phase of grout placement will only be completed once issues associated with RCRA Closure Plans, *National Environmental*

Policy Act of 1969 (NEPA) compliance associated with the development of a Closure Environmental Impact Statement, and DOE O 435.1 have been resolved with the regulators, stakeholders, and DOE-Headquarters. There is some uncertainty with the schedule for completion of the second phase (bulk tank filling) of the closure demonstration. A decision to implement the second phase depends on current NEPA evaluation and ongoing regulatory negotiations. Phase 2 tank fill could be delayed by up to 20 years; however, for the purposes of cost estimating, it is assumed that the second phase of grouting will be conducted immediately following the first phase.

- The grout used in the waste stabilization phase will be low strength to facilitate retrieval if necessary prior to the tank fill phase.
- No interim surface barriers will be placed as a part of the ATCD Project.
- No soil remediation will be performed as a part of the ATCD Project.

2.2 SUPPORTING ASSUMPTIONS

Supporting assumptions used in developing the technical approach and schedule contained in this report include the following:

- *RPP Administration* (HNF-IP-0842), Volume 13, Section 1.4, "Construction Project Management – Minor Projects," will be implemented as specifically identified in the statement of work for the management of the project.
- In-tank equipment will be grouted in place to the extent practical.
- In-tank debris will not adversely impact the effectiveness or performance of stabilizing the residual waste nor will the debris impact the performance of the stabilized waste residuals.
- The configuration of the tanks and associated structures, systems, and components will not be modified by the waste retrieval activities.
- The heel jet pump will be removed from tank 241-C-106 by the waste retrieval portion of the ATCD Project and the articulated mast system will be installed to support waste retrieval. The articulated mast system will be left in place following retrieval activities.
- The current configurations of the demonstration tanks will be developed from existing drawings, documentation, and recent field inspections. Discrepancies and inconsistencies in the configuration information will be identified for resolution during detail design.
- No new penetrations into the tank will be allowed for the ATCD Project.
- The volume of residual waste in the tanks following waste retrieval will not exceed the volume specified in HFFACO Milestone M-45-00 of 360 ft^3 for 100-series tanks and 30 ft^3 for 200-series tanks.

- Residual wastes will be distributed on the bottom of the tank and will consist of a wet sludge with minimal free liquid. There will be measurable contamination (i.e., waste) on the tank sidewalls; however, this is not considered part of the waste requiring stabilization.

- Characteristics of the residual waste (e.g., density, shear strength, mean particle size, moisture content) can be established from existing data to allow the development of reasonable enabling assumptions. Characteristics of the waste will be updated following planned waste characterization activities (not part of the basis of design) and video surveillance during waste retrieval.

- The requirement and time frame for retrievability will be quantified in a future update of the Level 2 Specification. The stabilized residual waste will be designed to meet retrievability requirements. Since retrieval of the stabilized waste would involve mechanical excavation higher strength grouts could be used.

- A grout formulation will be assumed for planning purposes based on development of a set of design objectives and available data on grout formulations developed or used at other sites. Grout formulation work is being conducted as a separate scope of the ATCD Project. Laboratory testing of grout formulations will be deferred to support detail design.

- The possibility of pretreatment of the heel to stabilize specific contaminants is recognized and could be incorporated into future updates to the design. Solids, slurries, or solutions could be added to the heel to accomplish this.

- Standard camera and lighting configurations previously developed and used for in-tank imaging will be used for in-tank surveillance during residual waste stabilization, sampling, monitoring, and subsequent tank fill activities.

- Surface restoration activities include restoring tank isolation measures (i.e., foaming pits and risers), and infiltration control measures. Evaluation of abovegrade equipment will be limited to disposition of abovegrade tank farm systems as required for subsequent placement of a surface barrier during closure of the 241-C tank farm.

- Following waste stabilization, the tank, tank risers, and in-tank equipment will be filled with grout. Further definition during the detail design phase may result in different grout formulations for different parts of the tank and in-tank equipment.

- There are no specific volume requirements for the stabilized waste heel to support specific contaminant concentrations for WIR determination. The final volume of grout used to stabilize the residual waste heel will be based on the stabilization strategy, materials, and requirements.

- Strategies for closure of the tank farm will be developed in the future and are not a part of this Basis of Design report.

- Waste retrieval activities would include removal of foam weather seal from all pits.

This page intentionally left blank.

3.0 INITIAL CONDITIONS

3.1 241-C TANK FARM

3.1.1 General 241-C Tank Farm Description

The 241-C farm tanks were built in the 200 East Area during the initial 30-month war-time construction period. The 241-C tank farm comprises twelve 100-series tanks and four 200-series tanks (Figure 3.1). The 100-series tanks are 75 feet in diameter with operating capacities of 530,000 gallons. The 200-series tanks are 20 feet in diameter with operating capacities of 55,000 gallons. Both types of tanks are constructed of reinforced concrete with welded carbon steel liners. These tanks were designed for non-boiling waste with maximum temperatures of 220 °F and a pH of 8-10. Cross-sectional views of typical 100-series and 200-series tanks are included in Figures 3.2 and 3.3, respectively.

3.1.2 241-C Tank Farm Adjacent Areas Description

The 241-C tank farm is located on the eastern edge of the 200 East Area. The 241-C tank farm is just north of a group of SST and double-shell tank farms (241-A, 241-AX, 241-AN, 241-AP, 241-AW, 241-AZ) and just south of the 218E12A burial ground. The 244-CR process vault, an inactive facility that was used as a lag storage and waste transfer station for various waste streams, is located near the south corner of the tank farm.

3.1.3 241-C Tank Farm Ancillary Equipment

There is a substantial amount of ancillary equipment (i.e., pits, transfer lines, ventilation equipment, vaults, diversion boxes) in the 241-C tank farm that will require disposition at or before closure of the farm. The cesium loadout facility (241-C-801) is located in the 241-C tank farm and was operated until 1976 as a transfer facility for cesium-rich waste. The cesium loadout facility is located near the east corner of the tank farm and would not interfere with tank closure activities for the demonstration tanks. Support facilities were also installed in the vicinity of tank 241-C-106 to support the tank 241-C-106 waste retrieval campaign in the late 1990s (Project W-320). The ancillary equipment not directly tied to the closure demonstration tanks is beyond the scope of this Basis of Design report; however, it is identified for background information.

3.1.4 241-C Tank Farm Constraints

Tank closure shall comply with the following requirements for toxic materials:

- **Lead** – Lead shall not be used unless it is fully encapsulated and identified with a permanent tag.
- **Toxic Substances Control Act** – Materials listed in the *Toxic Substances Control Act of 1976*, including polychlorinated biphenyls (PCBs), shall not be used in the system design.

Figure 3.1. Location Map of 241-C Tank Farm and Surrounding Facilities in the 200 East Area

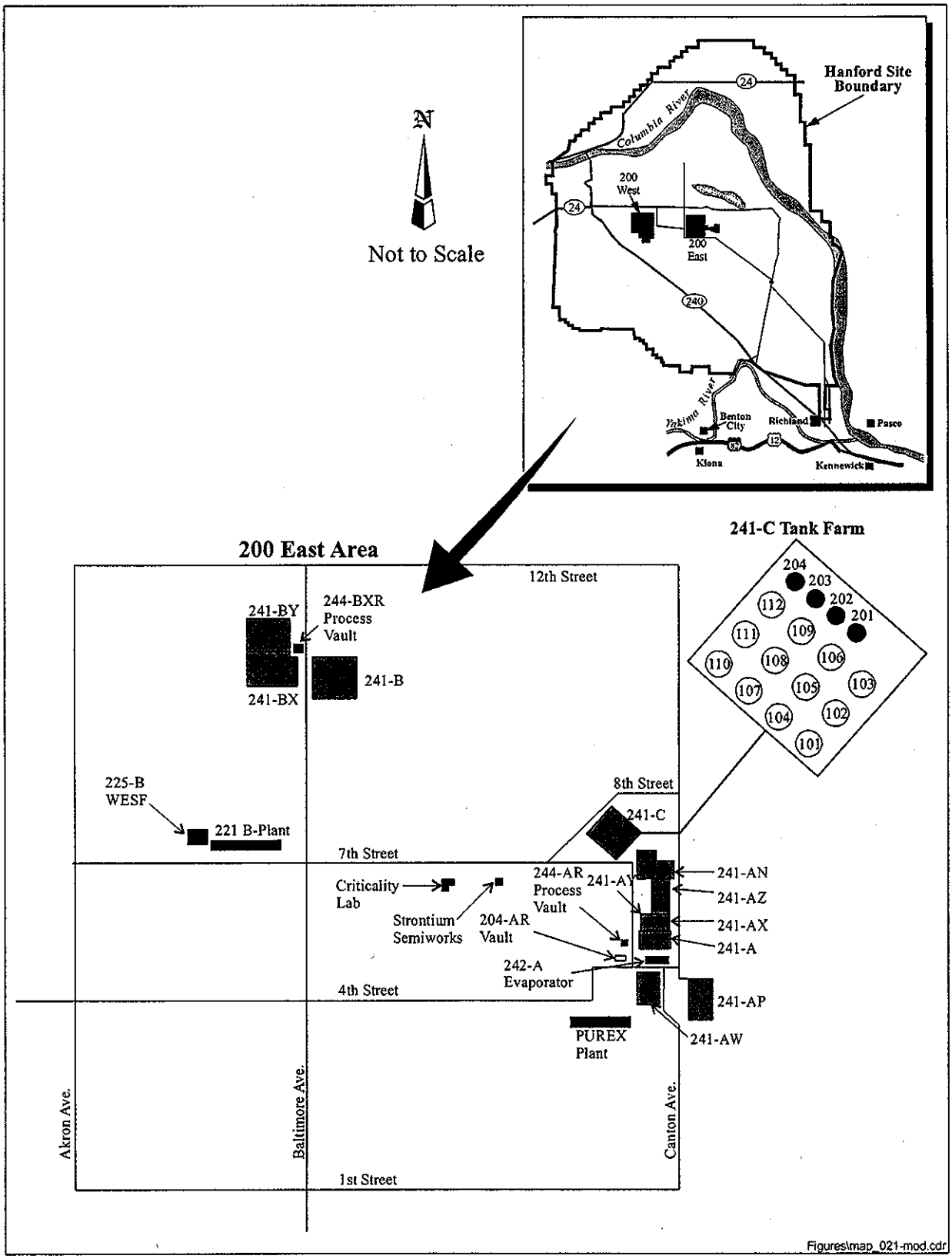

Figure 3.2. 241-C Farm 100-Series Tank Cross-Section

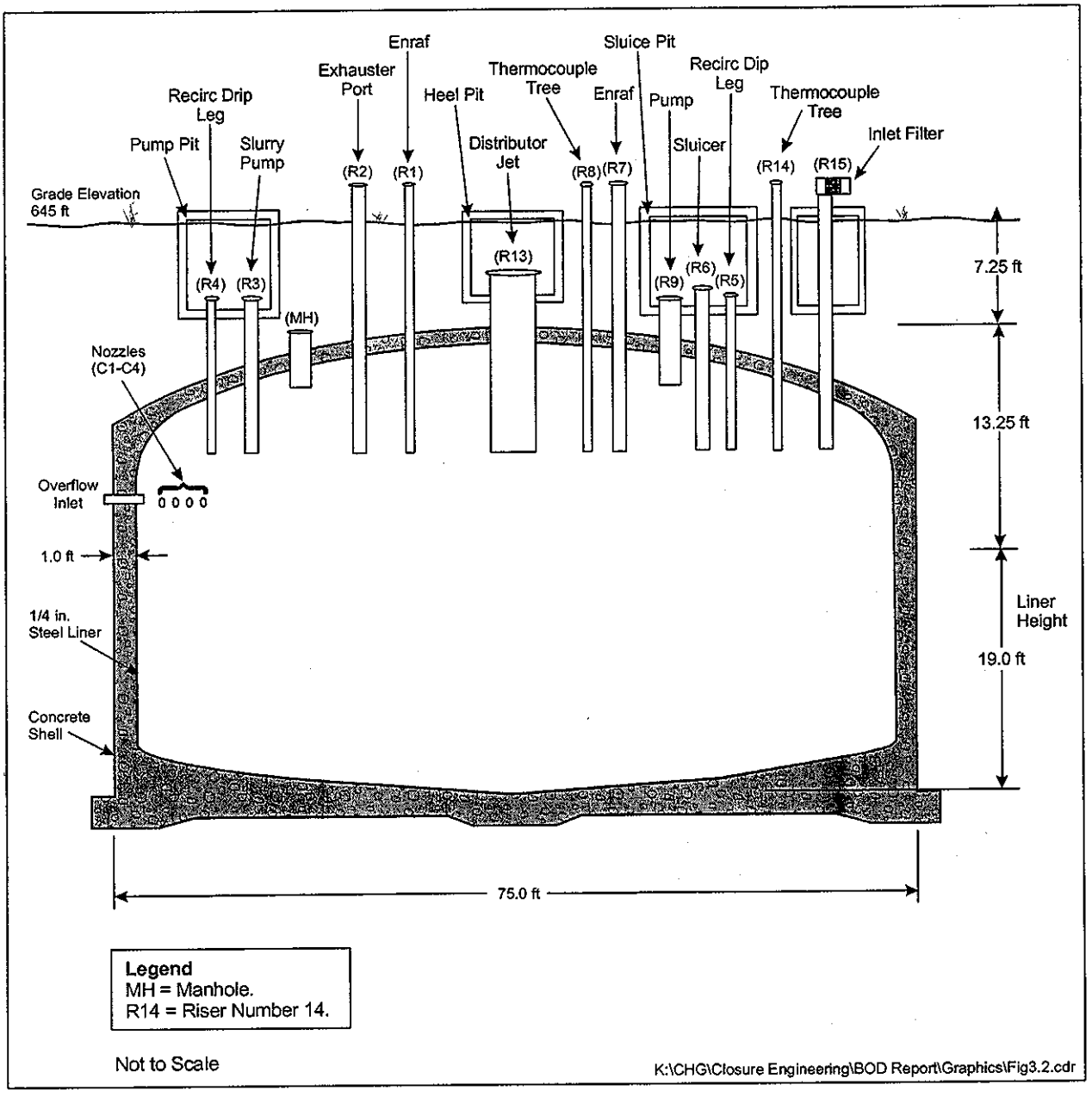

Figure 3.3. 241-C Farm 200-Series Tank Cross-Section

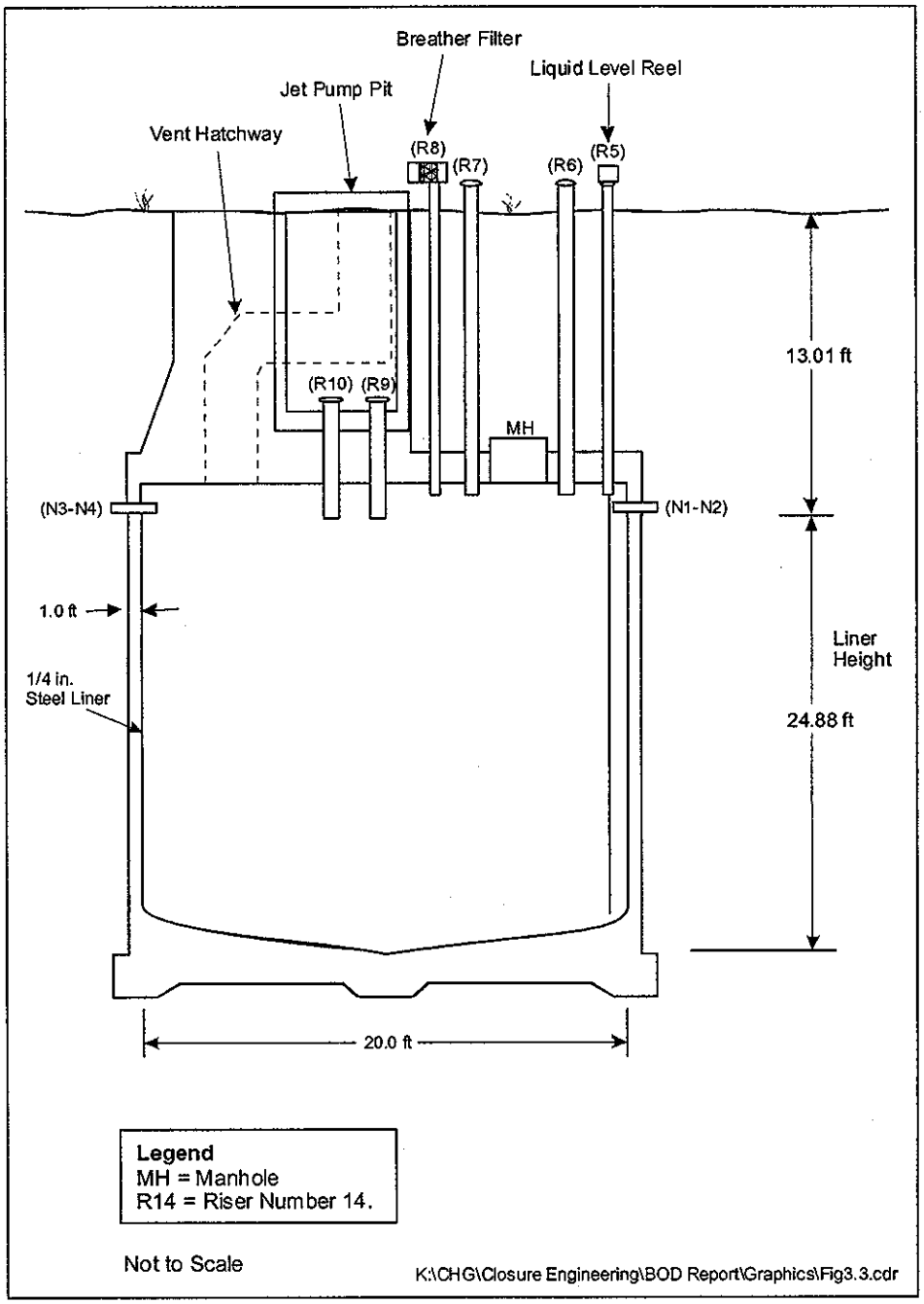

- **Ozone-Depleting Substances** – The system should avoid the use of ozone-depleting substances to remain exempt from the requirements of HNF-IP-0842, Volume 6, Section 1.8, Requirements 7 and 8 (RPP-11094).

The following safety basis requirements found in *Tank Waste Remediation System Technical Safety Requirements* (HNF-SD-WM-TSR-006) are applicable insofar as the deployment of the tank closure fill system (TCFS) will be conducted in the vicinity of tanks where these controls are required:

- Technical Safety Requirement (TSR) Administrative Control (AC) 5.10, "Ignition Controls": Key Element c, "Vehicle Controls," is required for vehicle access within the tank farm boundary. Access is limited to vehicles of which fuel systems are protected from damage to the integrity of the fuel systems caused by potential collisions with tank structures (e.g., mechanical protection such as a skid plate on the fuel tank or reservoir tanks physically located higher than risers or vehicle axles).

- TSR AC 5.16, "Dome Loading Controls": All Key Elements apply at all stages of the project. Following stabilization of the dome these controls should be re-evaluated and/or removed.

- TSR AC 5.22, "Transfer System Cover Removal Controls": All Key Elements apply at all stages of the project.

3.1.5 241-C Tank Farm Site Support Services

The following utilities are currently available at the 241-C tank farm:

- **SST electrical power system** – The electrical power capacity available to the 241-C tank farm will be 1,000 kVA of 3-phase power at 13.8 kV and 60 Hz

- **SST raw water** – The raw water available in the 241-C tank farm flows through a 2-inch line to the 241-C-73 Air and Water Service Building at 1,000 kPa (145 lb/in^2 gauge)

- **SST service air system** – The service air available to the 241-C tank farm is 25 ft^3/min of dry compressed air with a dew point of -40 °C at 690 kPa (100 lb/in^2 gauge).

All water for the 200 East Area is supplied from the Hanford Site export water system. Water is distributed throughout the area by two separate systems:

- **Raw water system** – Raw water is untreated, unchlorinated water used primarily for cooling, flushing, and dilution

- **Sanitary water system** – Sanitary water is treated (filtered, purified) and used for drinking and sanitary facilities.

Raw water is available from an existing 12-inch fire water line through a 2-inch supply line into the 241-C-73 Air and Water Service Building located outside of and to the east of the 241-C tank farm fence. The W-320 raw water system is shown in Drawings H-2-818519 (Sheet 1),

H-2-818530 (Sheet 2), H-2-818531 (Sheet 1), and H-2-818572 (Sheet 1). The water meter, primary filter, secondary filter, backflow preventer, monitoring gauges, and service line are housed in the air/water service building.

3.2 TANK 241-C-106

3.2.1 General Tank 241-C-106 Description

Tank 241-C-106 is the last tank in a three-tank cascade beginning with tanks 241-C-104 and 241-C-105. Tank 241-C-106 was constructed in 1943 and 1944, put into service in 1947, and was declared inactive in 1979. Tank 241-C-106 waste retrieval operations, completed in October 1999, removed approximately 97% of the sludge waste to meet the HFFACO Milestone M-45-03B requirements. The tank 241-C-106 waste retrieval effort met the goal of resolving the high-heat safety issue; however, the requirements regarding total quality of residual waste as specified in HFFACO Milestone M-45-00 were not met.

Tank 241-C-106 has a waste storage capacity of approximately 530,000 gallons, at a maximum vacuum of 50 inches of water. The total void volume of tank 241-C-106, which includes the waste storage capacity volume plus the dome space volume, is calculated to be 846,700 gallons (Appendix C). The tank is 75 feet in diameter and is fabricated of reinforced concrete with a carbon steel liner on the bottom and sides. The tank has a 12-inch-deep, dished bottom and a useable waste depth of about 16 feet at the sidewall. The bottom of the tank is 6 inches thick reinforced concrete covered with a 2- inch layer of asphalt composition material placed between the steel liner and the reinforced concrete during construction to seal the outer surface of the steel liner and to provide a moisture barrier. The tank walls are 13 inches thick reinforced concrete; the steel liner extends 18 feet up the straight side of the tank, varying in thickness from 1/4 to 3/8 inch. The top of the steel liner is covered with lead flashing to prevent moisture from entering any spaces between the liner and concrete wall. The dome of the tank is constructed of 15-inch-thick reinforced concrete. No liner is provided for the concrete dome. The tank is shown in plan and elevation in Figure 3.4.

Tank 241-C-106 is classified as a sound tank and recent experience during the waste retrieval effort indicated that is has not leaked.

3.2.2 Tank 241-C-106 Constraints

Equipment (e.g., cranes or cover blocks) placed or located on or near waste tanks shall meet the dome loading requirements defined in *Load Lifting and Dome Loading Controls* (HNF-IP-1266).

All mobile equipment (e.g., trucks, cranes) in the tank farms shall meet the ignition control requirements defined in Section 3.3.8 of RPP-11094.

Tank closure actions shall control structure and fill temperatures within the following specific design limits to prevent structural damage to the SSTs:

Figure 3.4. Tank 241-C-106 Plan and Section Views

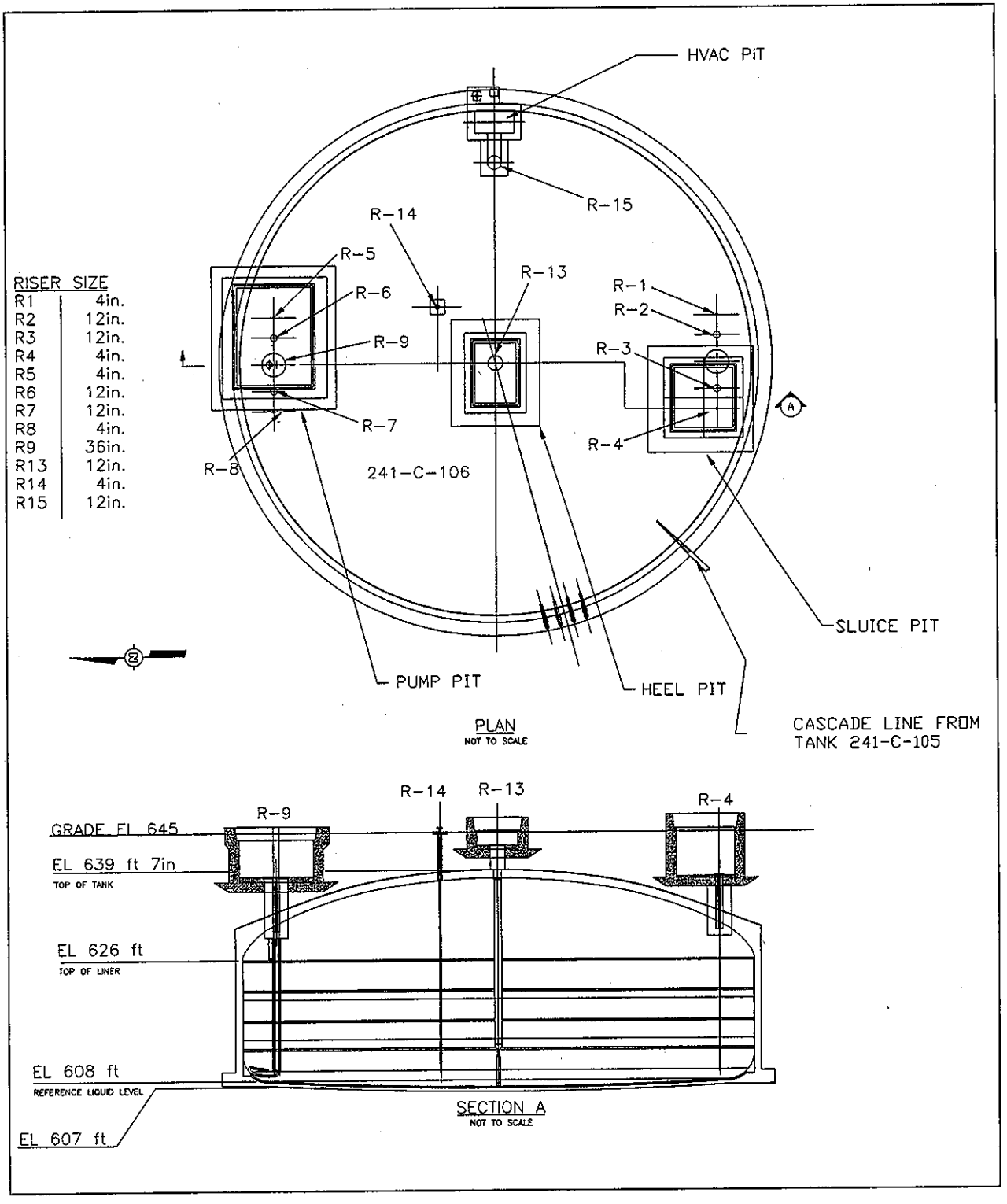

- 100-Series SST Temperatures: Maximum 250 °F for dome, maximum 300 °F for structure, and a maximum change of 20 °F per day for bulk temperature condition in tank. Tank 241-C-106 should be controlled to no more than 3 °F per day where possible. Structure temperature is controlled via control of the fill temperature (RPP-11094).

Tank closure actions shall control the vapor space pressure in the tank within the following specific design limits to prevent structural damage to the tank:

- Minimum pressure: 1 in. wg minus waste height [in. wg], not to exceed -9 in. wg
- Maximum pressure: +60 in. wg

Axial load limits on the risers and tank bottom include:

- Axial loads, 4-inch tank risers – For tank 241-C-106, the TCFS may impose axial loads not to exceed 500 lb on 4-inch risers, or impose moments not to exceed 250 ft-lb.

- Axial loads, 12-inch and larger risers – For tank 241-C-106, the TCFS may impose axial loads of no more than 3,000 lb on 12-inch or larger risers, or impose a moment of no more than 1,500 ft-lb.

- Axial load on tank bottom – For tank 241-C-106, the bottom surface of the tank may be used to support in-tank equipment. The maximum load imparted by the TCFS shall not exceed the value given by the following formula (RPP-11094):

$$W = 1{,}250 \times (\text{load area diameter [in.]} + 4.25) \quad \text{(lbf)}.$$

The following controls associated with a flammable gas deflagration are listed as being applicable for cutting and capping the cascade line between tank 241-C-106 and tank 241-C-105:

- TSR Limiting Condition for Operation (LCO) 3.1.4, "Ventilation Stack Continuous Air Monitor (CAM) Interlock Systems": Active ventilation in tank 241-C-106 would require continuous air monitors as long as the cascade line is open. (It may be applicable at all times depending on the safety basis controls in place after the tank cleanout activities have been completed.)

- TSR LCO 3.1.8, "High Efficiency Particulate Air Filter Differential Pressure Interlock Systems": Active ventilation in tank 241-C-106 would require high-efficiency particulate air (HEPA) pressure differential interlocks as long as the cascade line is open. (It may be applicable at all times depending on the safety basis controls in place after the tank cleanout activities have been completed.)

- TSR LCO 3.2.2, "SST Ventilation Systems – Active": Active ventilation in tank 241-C-106 is considered equipment important to safety as long as the cascade line is open. (It may be applicable at all times depending on the safety basis controls in place after the tank cleanout activities have been completed.)

- TSR AC 5.9, "Flammability Controls": Controls associated with a flammable gas deflagration apply before and during cutting and capping the cascade line from tank

241-C-106 to tank 241-C-105. Flammable gas related controls may apply to tank 241-C-106 and the 241-C farm 200-series tanks depending upon the safety basis as it is revised after the cleanout activities.

- TSR AC 5.10, "Ignition Controls": Controls associated with a flammable gas deflagration apply before and during cutting and capping the cascade line from tank 241-C-106 to tank 241-C-105. Flammable gas-related controls may apply to tank 241-C-106 and the 241-C farm 200-series tanks depending upon the safety basis as it is revised after the cleanout activities.

- TSR AC 5.11, "Flammable Gas Monitoring Controls": Controls associated with a flammable gas deflagration apply before and during cutting and capping the cascade line from tank 241-C-106 to tank 241-C-105. Flammable gas-related controls may apply to tank 241-C-106 and the 241-C farm 200-series tanks depending upon the safety basis as it is revised after the cleanout activities.

3.2.3 Tank 241-C-106 Residual Waste Heel

Current estimates for the tank 241-C-106 inventory, with the effective date of January 1, 2001, include 6,000 gallons (802 ft^3) of solids (sludge), and 30,000 gallons (4,010 ft^3) of liquid (supernate), as documented in the best-basis inventory. Current ATCD Project plans include additional waste retrieval down to the HFFACO interim retrieval goal (waste residuals not to exceed 360 ft^3 or limit of technology, whichever is less) before initiating tank closure actions.

The TCFS equipment installed in the tanks shall be designed to perform its intended function in the chemical environment of the tanks. This environment and its context are described in Appendix B of *Tank Waste Remediation System Operation and Utilization Plan* (HNF-SD-WM-SP-012).

3.2.4 Tank 241-C-106 Pit and Riser Access

The risers provide direct line-of-sight access to the tank interior through the tank dome. Risers either protrude above grade or into one of the three at-tank service pits:

- Pump pit C-06A
- Heel pit C-06B
- Sluice pit C-06C.

The risers also protrude into the tank space, extending past the interior surface of the concrete dome except for Riser R-15, which is mounted to the heating, ventilation, and air conditioning (HVAC) pit cover plate and does not provide a direct line-of-sight access to the tank interior. Riser R-13 extends 3 inches into the tank, Riser R-14 extends 6 inches into the tank, and all other risers extend 12 inches into the tank. The tank 241-C-106 risers are as identified in Table 3.1.

Table 3.1. Tank 241-C-106 Riser Configuration

Riser ID	Size (in.)	Flange	Flange Elevation (ft)	Location		Contents
				Tank Radius (ft)	Pit	
R-1	4	150# std. flange	646.15	33.25	none	Enraf per H-2-817634
R-2	12	150# std. flange	646.18	32.25	none	16 inch diameter aboveground HVAC duct with tie-in from 8"VT-1022-M8
R-3	12	Adapter ring per H-2-41311	647.24	32.25	241-C-06C sluice	Sluicer assembly per H-2-818549
R-4	4	Adapter ring per H-2-41319	638.21	33.25	241-C-06C sluice	Old recirculating dip leg per H-2-41318
R-5	4	Adapter ring per H-2-41319	637.63	33.25	241-C-06A pump	Shield plug
R-6	12	Adapter ring per H-2-41311	646.01	32.75	241-C-06A pump	Failed transfer pump PTX141
R-7	12	Modified 150# std. flange	646.48	32.75	241-C-06A pump	None; in-tank imaging system access
R-8	4	150# std. flange	645.66	33.25	241-C-06A pump	Thermocouple tree
R-9	36	Slurry pump adapter per H-2-41267	638.33	32.5	241-C-06A pump	Slurry pump per H-2-818494
R-13	12	Adapter plate per H-2-41295	643.09	0	241-C-06B heel	None; ATCD initial condition is that existing heel pump will be removed
R-14	4	150# std. flange	645.5	11.75	none	H-2-34304 temperature probe
R-15	12 10 6 6	Cover plate on concrete HVAC duct with multiple penetrations	645.14	33.6	HVAC	Inlet filter per H-2-818470 on riser 15 (12 inch port); duct on 10 inch port; seal loop on south 6 inch port; breather filter on north 6 inch port

Grade elevation = 645 feet, 0 inches.

ATCD = Accelerated Tank Closure Demonstration.
HVAC = heating, ventilation, and air conditioning.

3.2.5 Tank 241-C-106 Pipelines Accessing Tank

The one waste pipeline that directly accesses the interior of tank 241-C-106 is the cascade line from tank 241-C-105. The cascade line is a 3-inch, schedule 80 carbon steel pipe, approximately 25 feet long with a uniform 3% slope into tank 241-C-106. The cascade pipe protrudes 4 feet into the tank space. The cascade pipe burial depth is 22 feet at the tank 241-C-106 wall and 22 feet, 9 inches at the tank 241-C-105 wall. The waste pipe is enclosed within an 8-inch, schedule 40 carbon steel pipe (HW-72743).

The cascade line has two cleanout lines at approximately mid-distance between tanks 241-C-105 and 241-C-106. The cleanout lines are constructed of 2-inch, schedule 40 pipe. The cleanout lines extend upward from the cascade line and are capped approximately 6 inches below grade. The cleanout lines are spaced 6 inches apart at the cascade line and 6 feet apart at grade (H-2-2929; H-2-44006).

Four aboveground ducts are connected through the HVAC pit. Pipe material codes (e.g., M-42, M-26a) are as specified on Hanford Site Drawing H-2-31750. The four ducts are as follows:

- Seal loop VT-1001 is a 6-inch, M-42 duct
- Seal loop VT-1002 is a 6-inch, M-42 duct
- VT-1010 is a 10-inch, M8 duct going to the 241-C-91 Process Building
- The air inlet is a 12-inch, M8 duct attached to riser R-15. Riser R-15 is mounted on the HVAC pit cover.

Connected to riser R-2 is a 16-inch duct leading to the P-16 portable exhauster. The 8-inch VT-1022-M8 from the 241-C-91 Process Building is connected to the 16-inch duct.

Each of the at-tank pits has a 2-inch open drain that drains to a tank riser:

- 241-C-06A pump pit drain connects to Riser R-5
- 241-C-06B heel pit drain connects to Riser R-13
- 241-C-06C sluice pit drain connects to Riser R-4

There are three open encasement drains:

- ENC-100 is a 2-inch, M26a encasement drain connecting the SL-100 waste transfer line encasement to the pump pit at nozzle 241-C-06A-U8
- ENC-200 is a 2-inch, M26a encasement drain connecting the SN-200 waste transfer line encasement to the sluice pit nozzle 241-C-06C-U7
- ENC-302 is a 2-inch, M26a encasement drain connecting the DR-302 drain line encasement to the sluice pit nozzle 241-C-06C-U9.

All other waste transfer lines leading to tank 241-C-106 have been isolated as part of the interim stabilization program.

3.2.6 Tank 241-C-106 In-Tank Equipment

Two in-tank video surveys have been recently conducted on tank 241-C-106. A video camera survey was conducted of tank 241-C-106 following the 1999 sluicing retrieval effort. The video generally showed the interior condition of the tank including in-tank ancillary equipment. A second in-tank video made on August 1, 2002 confirmed the presence of the in-tank ancillary equipment identified in the 1999 video.

The following equipment was visible in the video:

- Riser R-3: Sluicer assembly
- Riser R-4: Old re-circulating dip leg
- Riser R-6: Transfer pump PTX141
- Riser R-8: Thermocouple tree
- Riser R-9: Slurry pump
- Riser R-13: Heel jet pump that will be removed as an initial condition for the ATCD Project
- Riser R-14: Thermocouple tree.

A section of pipe was visible on the bottom of the tank, partially resting on the slurry pump and extending past the thermocouple tree in Riser R-8. The pipe is probably an old temperature probe and is estimated to be 2 inches in diameter and greater than 10 feet in length.

3.2.7 Tank 241-C-106 Ventilation System

An older ventilation system (296-P-16, the tank 241-C-105/241-C-106 ventilation system) is still installed but is not a viable option for use in the ATCD Project due to radioactive air emission compliance issues.

Project W-320 installed a ventilation system chiller in combination with an inlet filter cooling coil on the 296-P-16 ventilation system to cool the tank contents. This allows for providing a constant 40 °F inlet air flow to the tank.

In addition to the chiller and filter cooling coil, Project W-320 installed a new ventilation system (296-C-006) for tank 241-C-106 that provides a nominal exhaust flow rate of 230 ft^3/min with a recirculation flow rate of up to 860 ft^3/min (Figure 3.5). The recirculation portion of the system was used to provide the needed cooling during the sluicing campaign. The exhaust portion of the system maintained the required negative pressure in the tank and flammable gas dilution during

the sluicing operations. The cascade line between tanks 241-C-105 and 241-C-106 is assumed to be open in the HVAC system design.

The 296-C-006 ventilation system was designed to be the only ventilation system used during active sluicing operations in tank 241-C-106. This system has been placed in a lay-up and could be placed back into service. During the operation the exhauster did not provide adequate flow to allow for large riser maintenance activities in the tank (RPP-5687). Charcoal filters were designed for this system but never installed. RPP-7155 recommends that this system as a whole not be reused, but that some components would likely be useable.

Currently, neither the 296-P-16 portable exhauster nor the 296-C-006 ventilation system is in use; tank 241-C-106 is passively ventilated through the existing HEPA filters. Prior to the ATCD Project, plans were being developed to convert tank 241-C-106 solely to a passive ventilation system, which would entail isolating the tank from the active ventilation systems and installing a breather filter assembly in place of the intake filters.

3.2.8 Tank 241-C-106 Instrumentation

Table 3.2 lists the existing instrumentation in tank 241-C-106. The signals are used to provide alarms as well as to provide data input for logging and trend analysis.

Table 3.2. Tank 241-C-106 Existing Instrumentation Signals

Instrument Tag Number	Description	Indication and/or Alarm (CASS, TMACS)
TE-106-14-1 through TE-106-14-6, and TE-106-14-8	Riser R-14 temperature sensors	X
TE-106-8-1 through TE-106-8-6	Riser R-8 temperature sensors	X
WST-LIT-1306	Riser R-1 Enraf level detector	X

CASS = Computerized-Automated Surveillance System.
TMACS = Tank Monitoring and Control System.
X = Indicates application or use.

The surface level of the waste in tank 241-C-106 is monitored by an Enraf gauge connected to the tank monitoring and control system (TMACS) with a required monitoring frequency of quarterly; temperature is monitored by thermocouple trees in Risers R-8 and R-14, both connected to TMACS with a required monitoring frequency of weekly. Waste surface levels are monitored for potential increases or decreases in waste volume. Increases would indicate water ingress while decreases would indicate evaporative losses or leakage.

Risers R-1 and R-14 have benchmarks for purposes of monitoring the dome elevation. The dome elevation is monitored at a required frequency of two years to evaluate any movement of the tank structure that could indicate structural integrity problems.

Figure 3.5. Tank 296-C-006 Ventilation System

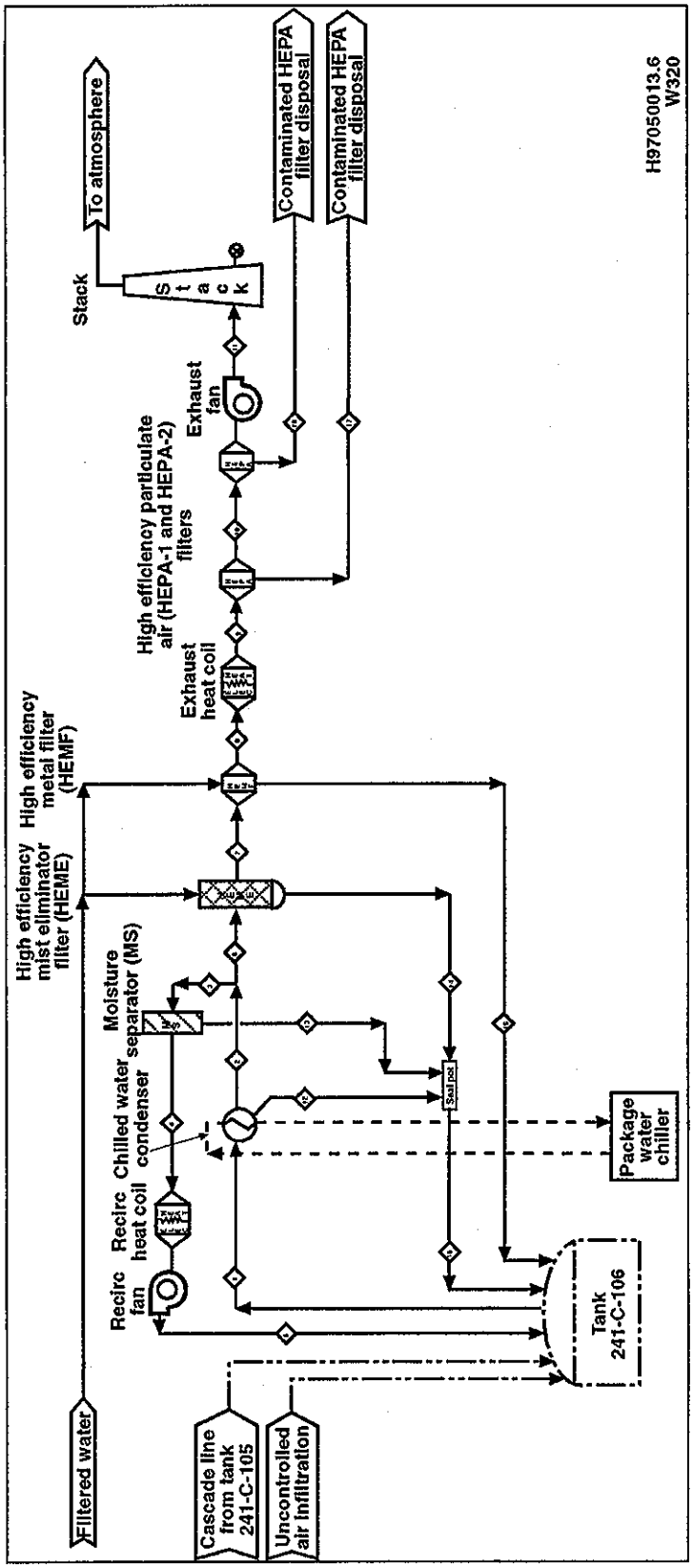

3.3 241-C FARM 200-SERIES TANKS

3.3.1 241-C Farm 200-Series General Tank Description

Tanks 241-C-201, 241-C-202, and 241-C-203 went into service in 1947. Tank 241-C-204 began receiving waste in 1948. Tanks 241-C-201, 241-C-202, and 241-C-203 were removed from service in 1976. Tank 241-C-204 was removed from service 1977. The 200-series tanks are 20 feet in diameter and have an operating volume of 55,000 gallons. The tanks are 20 feet in diameter with a 26.3-foot ceiling height, a 25-foot liner height, and a 24-foot operating height.

The 241-C farm 200-series tanks were originally constructed with 8 risers, 1 manhole, and 2 ventilation ports. Subsequent installation of the jet pump pit covered Risers R-1 through R-4 (two 4-inch diameter and two 12-inch diameter), installed two new 12-inch risers (Risers R-9 and R-10) and covered one of the ventilation ports. The original risers and HVAC ducts extend 12 inches below the interior surface of the concrete tank top closure and the new risers extend 6 inches into the tank.

3.3.2 241-C Farm 200-Series Tanks Constraints

Equipment (e.g., cranes or cover blocks) placed or located on or near waste tanks shall meet the dome loading requirements as defined in HNF-IP-1266.

All mobile equipment (e.g., trucks, cranes) in the tank farms shall meet the ignition control requirements as defined in Section 3.3.8 of the Level 2 Specification (RPP-11094).

The 200-series SSTs do not have thermal loads and, therefore, have not been evaluated for temperature limits. Applicability of thermal limits will be determined as the design evolves. Structure temperature is controlled via control of the fill temperature (RPP-11094).

The TCFS shall control the vapor space pressure in the tank within the following specific design limits to prevent structural damage to the tank:

- 200-Series SST Vapor Space Pressure Limits will be determined during the design evolution.

Control may include monitoring vapor space pressure, comparing monitored values to set limits, and maintaining vapor space pressure within set limits.

Applicability of axial load restrictions to the 241-C farm 200-series tanks will be determined during the design evolution (RPP-11094).

The TCFS equipment installed in the tanks shall be designed to perform its intended function in the chemical environment of the tanks. This environment and its context are described in Appendix B of HNF-SD-WM-SP-012.

3.3.3 241-C Farm 200-Series Tanks Ventilation System

All 241-C farm 200-series tanks are on a passive ventilation system consisting of a breather filter and a seal loop mounted on a tank riser.

3.4 TANK 241-C-201

Tank 241-C-201 is classified as an assumed leaker and was administratively interim stabilized in March 1982. Intrusion prevention measures have been completed. Tank 241-C-201 was declared an assumed leaker in 1988 with an estimated leak volume of 550 gallons (HNF-EP-0182, Rev. 168).

3.4.1 Tank 241-C-201 Residual Waste Heel

Tank 241-C-201 reportedly contains a waste volume of 1,000 gallons (134 ft^3) of hot semiworks sludge and no free liquid, a volume calculated from manual tape readings of 7.5 inches recorded in October 2000 (HNF-EP-0182, Rev. 168). Based on the tank geometry a waste depth of 7.5 inches corresponds to a volume of approximately 490 gallons (65 ft^3). This volume is judged to be more accurate than the 1,000 gallons reported in HNF-EP-0182 which has been rounded up to the nearest 1,000 gallons. Current ATCD Project plans include additional waste retrieval down to the HFFACO interim retrieval goal (waste residues not to exceed 30 ft^3 for 200-series tanks or limit of technology, whichever is less) before initiating tank closure actions.

3.4.2 Tank 241-C-201 Pit and Riser Access

The existing riser configuration is shown in Table 3.3. Original construction of the tank included an unlined 42-inch manhole in the concrete top of the tank with a concrete cover.

Table 3.3. Tank 241-C-201 Riser Configuration

Riser ID	Size	Flange El. (ft)	Location		Contents
			Tank Radius (ft)	Pit	
R-5	4	646.58	8	None	Breather filter
R-6	12	646.60	8	None	Temperature probe
R-7	12	646.63	8	None	Empty observation port
R-8	4	646.63	8	None	Enraf per H-2-73352 & H-2-817634
R-9	12	637.33	4	Jet pump	Sludge jet
R-10	12	637.33	6	Jet pump	None
HVAC		Grade	4	HVAC	None
MH	42		8	None	None

Grade elevation = 647 feet, 0 inches.
HVAC = heating, ventilation, and air conditioning.
MH = manhole.

3.4.3 Tank 241-C-201 Pipelines Accessing Tank

There are two 3-inch buried waste pipelines (V156 and V157) from diversion box 241-C-252 that directly access the tank through the tank wall and protrude into the tank approximately 1 foot (Nozzles N3 and N4). Both lines are approximately 230 feet long and slope into the tank with a total elevation change of approximately 2.5 feet. These direct-buried lines have no encasement. Both lines are blanked at the nozzles in the 241-C-252 diversion box. The pit drain and the other waste lines leading to the jet pump pit have been isolated as part of the interim stabilization project. Also, there are two spare nozzles (N1 and N2) that protrude into the tank approximately 1 foot that terminate at the outside wall of the tank with a gasketed, non-welded cap per original construction.

The pit drain and the other waste lines leading to the jet pump pit have been isolated as part of the interim stabilization project.

3.4.4 Tank 241-C-201 In-Tank Equipment

The extensions of the risers and ventilation port covered by the jet pump pit were visible on the in-tank video taken on June 14, 2002. The following equipment were visible in the video:

- Riser R-6: Temperature probe
- Riser R-9: Sludge jet pump.

A section of pipe was visible in the tank, supported on its ends by the tank wall and the tank bottom. The pipe is probably an old temperature probe and is estimated to be 2-inches in diameter and greater than 20 feet in length.

3.4.5 Tank 241-C-201 Instrumentation

The waste surface level is monitored by a manual tape with a required monitoring frequency of quarterly; temperature is monitored by a thermocouple tree in Riser R-6 connected to TMACS with a required monitoring frequency of 6 months.

3.5 TANK 241-C-202

Tank 241-C-202 was constructed in 1943-1944 and was classified as an assumed leaker in 1988. The tank was administratively interim stabilized in August 1981 and intrusion prevention measures have been completed. The estimated leak volume for tank 241-C-202 is 450 gallons (HNF-EP-0182).

3.5.1 Tank 241-C-202 Residual Waste Heel

Tank 241-C-202 reportedly contains 1,000 gallons (134 ft^3) of hot semiworks sludge and no free liquid, a volume calculated from manual tape readings of 8 inches in October 2000 (HNF-EP-0182, Rev. 168). Given the tank geometry a waste depth of 8 inches in tank 241-C-202 corresponds to a residual waste volume of 550 gallons (74 ft^3). This volume is judged to be more accurate than the 1,000 gallons reported in HNF-EP-0182 which has been

rounded up to the nearest 1,000 gallons. Current ATCD Project plans include waste retrieval down to the HFFACO interim retrieval goal before initiating tank closure actions.

3.5.2 Tank 241-C-202 Pit and Riser Access

The existing riser configuration is shown in Table 3.4. Original construction of the tank included an unlined 42-inch manhole in the concrete top of the tank with a concrete cover.

Table 3.4. Tank 241-C-202 Riser Configuration

Riser ID	Size	Flange El. (ft)	Location		Contents
			Tank Radius (ft)	Pit	
R-5	4	646.48	8	None	Breather filter
R-6	12	646.49	8	None	Temperature probe
R-7	12	646.5	8	None	Empty observation port
R-8	4	646.48	8	None	Enraf per H-2-73353 & H-2-817634
R-9	12	637.33	4	Jet pump	Sludge jet
R-10	12	637.33	6	Jet pump	None
HVAC		Grade	4	HVAC	None
MH	42		8	None	None

Grade elevation = 647 feet, 0 inches.
HVAC = heating, ventilation, and air conditioning.
MH = manhole.

3.5.3 Tank 241-C-202 Pipelines Accessing Tank

There are two 3-inch buried waste pipelines (V158 and V159) from diversion box 241-C-252 that directly access the tank through the tank wall and protrude into the tank approximately 1 foot (Nozzles N3 and N4). Both lines are approximately 185 feet long and slope into the tank with a total elevation change of approximately 2.5 feet. These direct-buried lines have no encasement. Both lines are blanked at the nozzles in the 241-C-252 diversion box. Also, there are two spare nozzles (N1 and N2) that protrude into the tank approximately 1 foot that terminate at the outside wall of the tank with a gasketed, non-welded cap per original construction.

The pit drain and the other waste lines leading to the jet pump pit have been isolated as part of the interim stabilization project.

3.5.4 Tank 241-C-202 In-Tank Equipment

The extensions of the risers and ventilation port covered by the jet pump pit were visible on the in-tank video taken on June 19, 2002. The following equipment were visible in the video:

- Riser R-6: Temperature probe
- Riser R-9: Sludge jet pump.

A section of pipe was visible in the tank, supported on its ends by the tank wall and the tank bottom. The pipe is probably an old temperature probe and is estimated to be 2 inches in diameter and greater than 20 feet in length.

3.5.5 Tank 241-C-202 Instrumentation

The waste within tank 241-C-202 is monitored using a manual tape with a required monitoring frequency of quarterly; temperature is monitored by a thermocouple tree in Riser R-6 connected to TMACS with a required monitoring frequency of 6 months.

3.6 TANK 241-C-203

Tank 241-C-203 was constructed in 1943-1944 and was declared a confirmed or assumed leaker in 1984 with an estimated leak volume of 400 gallons. The tank has been administratively interim stabilized and intrusion prevention measures have been completed (HNF-EP-0182, Rev. 168).

3.6.1 Tank 241-C-203 Residual Waste Heel

Tank 241-C-203 is reported to contain 3,000 gallons (400 ft^3) of hot semiworks sludge and no free liquid as calculated from manual tape readings showing a surface level reading of approximately 17 inches between 1999 and 2002 (HNF-EP-0182, Rev. 168). Based on the tank geometry a waste depth of 17 inches should correspond to a waste volume of 1,880 gallons (251 ft^3). This volume is judged to be more accurate than the 3,000 gallons reported in HNF-EP-0182 which has been rounded up to the nearest 1,000 gallons. Current ATCD Project plans include waste retrieval down to the HFFACO interim retrieval goal before initiating tank closure activities.

3.6.2 Tank 241-C-203 Pit and Riser Access

The existing riser configuration is shown in Table 3.5. Original construction of the tank included an unlined 42-inch manhole in the concrete top of the tank with a concrete cover.

Table 3.5. Tank 241-C-203 Riser Configuration

Riser ID	Size	Flange El. (ft)	Location		Contents
			Tank Radius (ft)	Pit	
R-5	4	646.65	8	None	Enraf per H-2-73354 & H-2-817634
R-6	12	646.62	8	None	Temperature probe
R-7	12	646.63	8	None	Spare
R-8	4	646.64	8	None	Breather filter
R-9	12	637.33	4	Jet pump	None
R-10	12	637.33	6	Jet pump	None
HVAC		Grade	4	HVAC	None
MH	42		8	none	None

Grade elevation = 647 feet, 0 inches.
HVAC = heating, ventilation, and air conditioning.
MH = manhole.

3.6.3 Tank 241-C-203 Pipelines Accessing Tank

There are two 3-inch buried waste pipelines (V160 and V161) from diversion box 241-C-252 that directly access the tank through the tank wall and protrude into the tank approximately 1 foot (Nozzles N3 and N4). Both lines are approximately 135 feet long and slope into the tank with a total elevation change of approximately 2.5 feet. These direct-buried lines have no encasement. Both lines are blanked at the nozzles in the 241-C-252 diversion box. Also, there are two spare nozzles (N1 and N2) that protrude into the tank approximately 1 foot that terminate at the outside wall of the tank with a gasketed, non-welded cap per original construction.

The pit drain and the other waste lines leading to the jet pump pit have been isolated as part of the interim stabilization project.

3.6.4 Tank 241-C-203 In-Tank Equipment

The extensions of the risers and ventilation port covered by the jet pump pit were visible on the in-tank video taken on July 16, 2002. The following equipment were visible in the video:

- Riser R-5: Sludge level measuring assembly with the tape extended; additional tape is coiled in the waste below Riser R-6
- Riser R-6: Temperature probe.

A section of pipe is visible in the tank per the July 16, 2002 video, standing against the wall under Riser R-8. The pipe is probably an old temperature probe and is estimated to be 2 inches in diameter and greater than 20 feet in length. Also, there is a ball of metal tape at the end of the temp probe in Riser R-6.

3.6.5 Tank 241-C-203 Instrumentation

The waste level in tank 241-C-203 is monitored by a manual tape with a required monitoring frequency of quarterly; temperature is monitored by a thermocouple tree in Riser R-6 connected to TMACS with a required monitoring frequency of 6 months.

3.7 TANK 241-C-204

Tank 241-C-204 was constructed in 1943-1944 and was declared a confirmed or assumed leaker in 1988 with an estimated leak volume of 350 gallons. The tank was administratively interim stabilized in 1982 and intrusion prevention measures have been completed (HNF-EP-0182, Rev. 168).

3.7.1 Tank 241-C-204 Residual Waste Heel

Tank 241-C-204 is reported to contain 3,000 gallons (400 ft^3) of strontium semiworks sludge waste and no free liquid as calculated from manual tape readings showing a consistent surface level reading of approximately 17 inches between 1999 and 2002 (HNF-EP-0182, Rev. 168). Based on the tank geometry a waste depth of 17 inches corresponds to a volume of 1,880 gallons (251 ft^3). This volume is judged to be more accurate than the 3,000 gallons reported in HNF-EP-0182 which has been rounded up to the nearest 1,000 gallons. Current ATCD Project plans include waste retrieval down to the HFFACO interim retrieval goal before initiating tank closure activities.

3.7.2 Tank 241-C-204 Pit and Riser Access

The existing riser configuration is shown in Table 3.6. Original construction of the tank included an unlined 42-inch manhole in the concrete top of the tank with a concrete cover.

Table 3.6. Tank 241-C-204 Riser Configuration

Riser ID	Size	Flange El. (ft)	Location		Contents
			Tank Radius (ft)	Pit	
R-5	4	646.52	8	None	Enraf per H-2-73355 & H-2-817634
R-6	12	646.58	8	None	Spare
R-7	12	646.57	8	None	Empty observation port
R-8	4	646.57	8	None	Breather filter
R-9	12	637.33	4	Jet pump	Sludge jet
R-10	12	637.33	6	Jet pump	Per 6/26/02 video, appears to be a 4 multi-stage turbine pump; a flanged connection is visible with plastic wrap and Russian thistle
HVAC		Grade	4	HVAC	None
MH	42		8	None	None

Grade elevation = 647 feet, 0 inches.
HVAC = heating, ventilation, and air conditioning.
MH = manhole.

3.7.3 Tank 241-C-204 Pipelines Accessing Tank

There are two 3-inch buried waste pipelines (V162 and V163) from diversion box 241-C-252 that directly access the tank through the tank wall and protrude into the tank approximately 1 foot (Nozzles N3 and N4). Both lines are approximately 90 feet long and slope into the tank with a total elevation change of approximately 2.5 feet. These direct-buried lines have no encasement. Both lines are blanked at the nozzles in the 241-C-252 diversion box. Also, there are two spare nozzles (N1 and N2) that protrude into the tank approximately 1 foot that terminate at the outside wall of the tank with a gasketed, non-welded cap per original construction.

The pit drain and the other waste lines leading to the jet pump pit have been isolated as part of the interim stabilization project.

3.7.4 Tank 241-C-204 In-Tank Equipment

The extensions of the risers and ventilation port covered by the jet pump pit were visible on the in-tank video taken on June 26, 2002. The following equipment were visible in the video:

- Riser R-5: Sludge level measuring assembly with the tape extended; additional tape is coiled in the waste below Riser R-5
- Riser R-9: Sludge jet pump with corroded lines visible near the bottom of the riser extension

- Riser R-10: Appears to be a 4 inch multi-stage turbine pump; below the riser extension, a flanged connection is visible with plastic wrap and a fragment of dry Russian thistle draped on the flanged connection; according to drawings, a partial sluicer assembly was anticipated to be in this riser.

A section of pipe was visible in the tank, supported on its ends by the tank wall and the tank bottom. The pipe is probably an old temperature probe and is estimated to be 2 inches in diameter and greater than 20 feet in length. Other miscellaneous items in the tank include what appear to be 3 or 4 rags and a block of unknown dimension and material.

3.7.5 Tank 241-C-204 Instrumentation

The waste level in tank 241-C-204 is monitored by a manual tape with a required monitoring frequency of quarterly; no temperature data has been collected for tank 241-C-204 for several years.

This page intentionally left blank.

4.0 PROJECT REGULATORY AND TECHNICAL REQUIREMENTS

The performance-based specifications for tank closure preliminary engineering are defined in the Level 2 Specification (RPP-11094). This section discusses, and incorporates by reference, the performance specifications. The performance objectives and limitations as defined in the applicable regulations are identified and reference is made to the regulatory strategy and decision documents that are being prepared in support of the ATCD (JEG-02-016).

The ATCD Project is currently preparing tank-specific closure plans, and environmental assessment under NEPA, and other regulatory strategy documents to address the projects strategy and approach to meeting the regulatory requirements for tank closure. Following DOE and/or regulator approval the closure plans will define tank closure requirements. These regulatory documents (with the exception of the Notices of Construction identified in Section 4.3) are outside the scope of this Basis of Design report.

4.1 REGULATORY REQUIREMENTS (DRIVERS)

The classification of the residual waste remaining in the tanks following retrieval is assumed to be mixed LLW incidental to reprocessing. A WIR determination has not yet been made. Based on assumed waste classification the RCRA, DOE O 435.1, and NEPA requirements identified in the Level 2 Specification are discussed in the following sections.

In addition the 241-C tank farm will be closed in accordance with the HFFACO. Consequently closure and post-closure requirements are applicable to the overall tank closure activities. Post-closure requirements will be defined in the tank-specific closure plans.

4.1.1 RCRA Requirements

The tank farms are managed as RCRA treatment, storage, and/or disposal units. The following RCRA requirement is taken from "Dangerous Waste Regulations Closure and Postclosure" (WAC 173-303-610).

> (2) Closure performance standard. The owner or operator must close the facility in a manner that:
>
> (a)(i) Minimizes the need for further maintenance;
>
> (ii) Controls, minimizes or eliminates to the extent necessary to protect human health and the environment, post-closure escape of dangerous waste, dangerous constituents, leachate, contaminated run-off, or dangerous waste decomposition products to the ground, surface water, ground water, or the atmosphere; and
>
> (iii) Returns the land to the appearance and use of surrounding land areas to the degree possible given the nature of the previous dangerous waste activity.
>
> (b) Where the closure requirements of this section, or of WAC 173-303-630(10), 173-303-640(8), 173-303-650(6), 173-303-655(6), 173-303-655(8), 173-303-660(9), 173-303-665(6), 173-303-670(8), 173-303-680 (2) through (4), or 40 CFR 264.1102 (incorporated by reference at WAC 173-303-695) call for the removal or decontamination of dangerous wastes, waste residues,

or equipment, bases, liners, soils or other materials containing or contaminated with dangerous wastes or waste residue, then such removal or decontamination must assure that the levels of dangerous waste or dangerous waste constituents or residues do not exceed:

(i) For soils, ground water, surface water, and air, the numeric cleanup levels calculated using residential exposure assumptions according to the Model Toxics Control Act Regulations, chapter 173-340 WAC as now or hereafter amended. Primarily, these will be numeric cleanup levels calculated according to MTCA Method B, although MTCA Method A may be used as appropriate, see WAC 173-340-700 through 173-340-760, excluding WAC 173-340-745; and

(ii) For all structures, equipment, bases, liners, etc., clean closure standards will be set by the department on a case-by-case basis in accordance with the closure performance standards of WAC 173-303-610(2)(a)(ii) and in a manner that minimizes or eliminates post-closure escape of dangerous waste constituents.

4.1.2 DOE O 435.1 Requirement

All radioactive waste shall be managed in accordance with the requirements in *Radioactive Waste Management Manual* (DOE M 435.1-1). Because the SSTs are classified as containing high-level mixed waste, the HLW requirements in DOE M 435.1-1 are applicable. This section discusses the DOE M 435.1-1 HLW requirements including WIR determination.

HLW is defined as the highly radioactive waste material resulting from the reprocessing of spent nuclear fuel, including liquid waste produced directly in reprocessing and any solid material derived from such liquid waste that contains fission products in sufficient concentrations; and other highly radioactive material that is determined, consistent with existing law, to require permanent isolation.

4.1.2.1 Waste Incidental to Reprocessing

Waste resulting from reprocessing spent nuclear fuel that is determined to be incidental to reprocessing is not HLW, and shall be managed under DOE regulatory authority in accordance with the requirements for transuranic waste or LLW, as appropriate. When determining whether spent nuclear fuel reprocessing plant wastes shall be managed as another waste type or as HLW, either the citation or evaluation process may be used. Determinations that any residual tank waste is incidental to reprocessing will utilize the evaluation process in accordance with DOE M 435.1-1.

Determinations that any waste is incidental to reprocessing by the evaluation process shall be developed under good record-keeping practices, with an adequate quality assurance process, and shall be documented to support the determinations. Based on the assumed waste classification the residual tank waste will be managed as LLW and will meet the following criteria:

- Will have been processed, or will be processed, to remove key radionuclides to the maximum extent that is technically and economically practical
- Will be managed to meet safety requirements comparable to the performance objectives set out in 10 CFR Part 61, Subpart C, *Performance Objectives*; and

- Are to be managed, pursuant to DOE's authority under the *Atomic Energy Act of 1954*, as amended, and in accordance with the provisions of Chapter IV of this Manual, provided the waste will be incorporated in a solid physical form at a concentration that does not exceed the applicable concentration limits for Class C LLW as set out in 10 CFR 61.55, *Waste Classification*; or will meet alternative requirements for waste classification and characterization as DOE may authorize.

4.1.2.2 Performance Objectives for Low-Level Waste Disposal Facilities

Based on a WIR determination as LLW from DOE M 435.1-1, the residual LLW in the five ATCD tanks shall meet the following requirements (DOE M 435.1-1 IV[P]):

(1) Performance Objectives. Low-level waste disposal facilities shall be sited, designed, operated, maintained, and closed so that a reasonable expectation exists that the following performance objectives will be met for waste disposed of after September 26, 1988:

(a) Dose to representative members of the public shall not exceed 25 mrem (0.25 mSv) in a year total effective dose equivalent from all exposure pathways, excluding the dose from radon and its progeny in air.

(b) Dose to representative members of the public via the air pathway shall not exceed 10 mrem (0.10 mSv) in a year total effective dose equivalent, excluding the dose from radon and its progeny.

(c) Release of radon shall be less than an average flux of 20 pCi/m^2 /s (0.74 Bq/m^2/s) at the surface of the disposal facility. Alternatively, a limit of 0.5 pCi/1 (0.0185 Bq/l) of air may be applied at the boundary of the facility.

(2) Performance Assessment. A site-specific radiological performance assessment shall be prepared and maintained for DOE low-level waste disposed of after September 26, 1988. The performance assessment shall include calculations for a 1,000 year period after closure of potential doses to representative future members of the public and potential releases from the facility to provide a reasonable expectation that the performance objectives identified in this Chapter are not exceeded as a result of operation and closure of the facility.

(a) Analyses performed to demonstrate compliance with the performance objectives in this Chapter, and to establish limits on concentrations of radionuclides for disposal based on the performance measures for inadvertent intruders in this Chapter shall be based on reasonable activities in the critical group of exposed individuals. Unless otherwise specified, the assumption of average living habits and exposure conditions in representative critical groups of individuals projected to receive the highest doses is appropriate. The likelihood of inadvertent intruder scenarios may be considered in interpreting the results of the analyses and establishing radionuclide concentrations, if adequate justification is provided.

(b) The point of compliance shall correspond to the point of highest projected dose or concentration beyond a 100 meter buffer zone surrounding the disposed waste. A larger or smaller buffer zone may be used if adequate justification is provided.

(c) Performance assessments shall address reasonably foreseeable natural processes that might disrupt barriers against release and transport of radioactive materials.

(d) Performance assessments shall use DOE-approved dose coefficients (dose conversion factors) for internal and external exposure of reference adults.

(e) The performance assessment shall include a sensitivity/uncertainty analysis.

(f) Performance assessments shall include a demonstration that projected releases of radionuclides to the environment shall be maintained as low as reasonably achievable (ALARA).

(g) For purposes of establishing limits on radionuclides that may be disposed of near-surface, the performance assessment shall include an assessment of impacts to water resources.

(h) For purposes of establishing limits on the concentration of radionuclides that may be disposed of near-surface, the performance assessment shall include an assessment of impacts calculated for a hypothetical person assumed to inadvertently intrude for a temporary period into the low-level waste disposal facility. For intruder analyses, institutional controls shall be assumed to be effective in deterring intrusion for at least 100 years following closure. The intruder analyses shall use performance measures for chronic and acute exposure scenarios, respectively, of 100 mrem (1 mSv) in a year and 500 mrem (5 mSv) total effective dose equivalent excluding radon in air.

4.1.3 10 CFR 61 Performance Objectives

Stabilization and encapsulation of waste for disposal shall meet Subpart C of "Licensing Requirements for Land Disposal of Radioactive Waste" (10 CFR 61) or approved Site-specific criteria. Subpart D, "Technical Requirements for Land Disposal Facilities," would also apply. The current strategy is to pursue site-specific criteria.

4.1.4 10 CFR 830 Performance Objectives

Stabilization and encapsulation operations shall meet licensing requirements for "Nuclear Safety Management" (10 CFR 830) as implemented by the Hanford Site safety basis. Those documents included in the safety basis are listed as an attachment to HNF-IP-0842, Volume 4, Section 5.4, "Unreviewed Safety Questions."

4.1.5 National Environmental Policy Act Performance Limitations

Until a finding of No Significant Impact is issued in accordance with "NEPA and Agency Decision Making" (40 CFR 1505), no action concerning field implementation of this basis of design shall be taken that would have an adverse environmental impact, or limit the choice of reasonable alternatives.

NEPA limitations are specified in "Interim actions: Limitations on actions during the NEPA process" (10 CFR 1021.211) and "Limitations on actions during the NEPA process" (40 CFR 1506.1).

4.2 TECHNICAL REQUIREMENTS

The following sections are summarized from the Level 2 Specification (RPP-11094).

4.2.1 Waste Heel Stabilization Material

General criteria and guidelines for waste heel stabilization material are specified within Section 3.1.2 of RPP-11094. Subsequent engineering activities will specify waste heel stabilization fill material properties, formulation, and fill test requirements.

4.2.1.1 Function

Material shall be placed in contact with residual waste on the tank bottom to minimize risk of contaminant migration before placement of succeeding lifts of tank fill material. Acceptable methods for minimizing risk of contaminant migration include liquid absorption, waste encapsulation, cementitious bonding of waste and stabilization material, or chemical interaction with key contaminant drivers for risk through the groundwater pathway.

4.2.1.2 Structural Properties

Materials placed for waste heel stabilization shall have sufficient structural capacity to support succeeding lifts of tank fill material for the purpose of long-term structural stability of the tank dome and surface barrier provided at the time of final tank farm closure.

4.2.1.3 Retrievability

Materials placed for waste heel stabilization shall be of low compressive strength and shear strength to facilitate removal if decisions on final tank farm closure preclude placement of subsequent lifts of tank fill material.

4.2.2 Tank Fill Material

TCFS fill materials shall be consistent with the general criteria and guidelines specified within this section. Subsequent engineering activities will specify tank fill material properties, formulation, and fill test requirements.

4.2.2.1 Fill Material

Fill material for the tanks will be placed over the waste heel stabilization material. Tank fill material shall be selected to provide long-term structural stability of the tank domes to preclude subsidence of the tank and failure of a surface barrier that may be placed at the time of final tank farm closure, and to minimize infiltration of water that could come in contact with residual waste. Grout mix formulations designed for long-term radioactive waste disposal shall be considered. Formulations considered will be the cold-cap grout formulation developed by the U.S. Army Corps of Engineers for the Hanford Grout Vault Program (SL-92-21), grout materials used for closure of HLW tanks at the Savannah River Site as specified in draft report *State of the Art Report on High-Level Waste Tank Closure* (WSRC-TR-2001-00359), and others developed for closure of DOE site cleanup applications.

4.2.2.2 Fill Characteristics

Grout formulation shall exhibit a relatively low heat of hydration; shall be free-flowing, self-compacting, non-shrink, non-expansive, and self-leveling; and shall be designed to involve little or no free water during curing and maintain uniform properties to the distance of the pour spread.

4.2.2.3 Fill Stability

Tanks shall be stabilized to prevent subsidence and provide a structurally sound base for a surface barrier. The fill must be of sufficient compressive strength and shear strength to provide long-term structural stability for a minimum of 1,000 years to prevent tank dome failure and subsidence and consequent degradation of a 1,000-year surface barrier that would be placed at final tank farm closure.

4.2.2.4 Tank Air Filtration System

A skid-mounted exhauster with HEPA filtration shall be used during grout filling. The system shall meet the applicable requirements for equipment important to safety.

4.3 AIR PERMITTING REQUIREMENTS

It is assumed that both radiological and non-radiological Notices of Construction will be required prior to initiating tank closure activities. The project schedule and cost estimate in this Basis of Design report include the preparation, review, approval, and implementation of Notices of Construction.

5.0 PROJECT BOUNDARIES AND INTERFACES

The physical boundaries of the tank closure design include those structures, systems, and components that will be filled during tank closure. The physical boundary for tank closure includes the tank, all risers connected to the tank, and all at-tank pits. There are no requirements to stabilize waste transfer lines as a part of the tank closure demonstration. Disposition of the transfer lines is deferred to closure of the farm. However, specific actions are taken to isolate the cascade line between tanks 241-C-106 and 241-C-105 to prevent grout from flowing into tank 241-C-105. Other interconnected piping was evaluated and will be incidentally stabilized during placement of grout fill in the pits by allowing grout to gravity flow into the lines to a stall distance as described in Section 6.0.

There are a number of potential project interfaces that could affect the design and/or logistics associated with completing tank closure efforts for the five demonstration tanks. The most significant closure interfaces are between the tank closure and the planned waste retrieval activities in each of the demonstration tanks. The waste volume currently in the five demonstration tanks exceeds the HFFACO interim retrieval goals and the ATCD Project is planning to design and deploy waste retrieval systems in all five of the demonstration tanks. As the waste retrieval design and the tank closure designs are developed there are a number of interface and integration areas to be considered. As shown in the project schedule, the tank closure assumption is that the tank 241-C-106 waste retrieval efforts will be completed by January 30, 2004. A delay in completion of the waste retrieval could impact the tank closure schedule. A number of integration areas to be considered in detail design include common tank ventilation systems and camera systems.

There are additional activities that are in various stages of planning that could impact planned tank closure activities. These activities include:

- Construction activities for Project W-523, tank 241-C-104 waste retrieval, are scheduled to begin in fiscal year (FY) 2004 and continue into FY 2006. This would result in increased tank farm activity and potential congestion within the farm.

- Implementation of interim measures (i.e., interim barriers) in the 241-C tank farm. The Tank Farm Vadose Zone is currently developing plans for implementing interim surface barriers in the tank farms. This planning is in the preliminary stages, however the intent is to install interim barriers in late FY 2003. There would be logistics issues if tank closure and interim surface barrier installation were conducted at the same time. These construction interfaces will be resolved during detailed design.

- Interim stabilization in tank 241-C-103 will be operating in the 241-C tank farm during FY 2003.

This page intentionally left blank.

6.0 PROJECT AND OPERATIONAL DESCRIPTION

The objective of this ATCD Basis of Design report is to present the preliminary engineering for filling the tanks with grout in a series of lifts in two separate phases. As mentioned in Section 2.1, "Key Assumptions," the tanks will be filled with grout in a series of lifts in two separate phase. Phase 1 involves the initial grout placement to stabilize the residual waste heel that is expected to remain following retrieval. Phase 2 involves filling the remaining tank void space to the tank dome for the purpose of minimizing water infiltration, preventing long-term degradation of the tank farm surface barrier due to subsidence, and discouraging intruder access. It is important to note that the second phase of grout placement will only be completed once issues associated with RCRA Closure Plans, NEPA compliance associated with the development of a Closure Environmental Impact Statement, and DOE O 435.1 have been resolved with the regulators, stakeholders, and DOE-Headquarters. There is some uncertainty with the schedule for completion of the second phase (bulk tank filling) of the closure demonstration. A decision to implement the second phase depends on current NEPA evaluation and ongoing regulatory negotiations. Phase 2 tank fill could be delayed by up to 20 years; however, for the purpose of cost estimating, it is assumed that the second phase of grouting will be conducted immediately following the first phase.

Consistent with the selected alternative, as discussed in Section 7.0 and Appendix E, a portable continuous mixing grout plant will be mobilized at a staging area adjacent to the tank farm in a nonradiologically controlled area as shown in CE-SK-02-101. The portable grout plant has two production lines each having a nominal production rate of 40 yd^3/hr. The two grout production lines can be run independently or simultaneously for a combined nominal grout production rate of 80 yd^3/hr. This production rate was established based on bulk fill tank volume for tank 241-C-106 and the schedule constraints for the closure demonstration. Both grout production lines feed into a single grout pump. Power to the portable grout plant will be provided by portable generators. Site services would provide water to the mixing plant. Dry grout mix components would be trucked to the mixing plant from offsite suppliers.

The grout will be pumped through a slickline constructed between the grout pump and the tank riser. The slickline will consist of 5-inch diameter pipe in 10-foot sections connected together with grooved couplings and placed on grade. Scaffolding support may be required adjacent to the riser pit and other locations that the ground does not provide continuous support of the slickline. The grout slickline will cross the radiological control barrier. The slickline within the radiologically controlled area will be constructed, maintained, and operated by Hanford Site forces; that outside the radiologically controlled area will be constructed, maintained, and operated by the vendor.

Cleaning of the grout plant mixing auger chamber, pump, and slickline will be required at the completion of a grouting campaign or upon extended delays. The wastes that will be generated by cleaning the grout production and delivery equipment include approximately 10 ft^3 of a mixture of crushed rock and grout and approximately 500 gallons of waste water. The crushed rock and grout mixture will be disposed of as solid waste at a nonradioactive, non-hazardous disposal facility on the Hanford Site and the waste water will be treated and disposed of by Hanford Site facilities.

The free-flowing grout will be placed into the tank through a single tank riser using a tremie to limit the drop height. Due to the required flow distance, grout will be placed into tank 241-C-106 through the central riser. The grout will mix with or encapsulate a portion of the free or unbound residual tank waste.

Accelerated Tank Closure Demonstration Alternatives Generation and Analysis (RPP-12194) down-selects the use of a layer of low-strength grout for waste stabilization in the tanks. It is generally assumed that non-retrievable residual waste would likely be strongly adhered to the tanks steel liners. A small volume of free liquid may remain after waste retrieval from tank 241-C-106. RPP-12194 notes that chemical getters will likely be added based on further development and waste characterization results. The liquid waste fraction (in tank 241-C-106) will be incorporated within the grout. Incorporation of the liquid waste is significant as it is expected to contain the highest concentration of the mobile constituents. Further, RPP-12194 states that residual solid waste, adhered to the steel liner of the tank, will be blanketed with the initial grout layer. Although the solid waste will not be fully encapsulated, the overlying grout is expected to minimize contact with infiltration water and maintain a high pH environment conducive to minimizing contaminant solubility.

Following residual waste heel stabilization (Phase 1 grouting), the remaining tank void space will be filled with grout (Phase 2). Phase 2 grouting will be accomplished in the same manner as Phase 1 grouting (CE-SK-02-108) with lift heights constrained only by dissipation of heat generated from the setting grout, tank wall loading associated with hydrostatic pressures, and grout production capability.

The at-tank pits and their associated risers and in-tank equipment will be filled with a free-flowing grout (part of Phase 2) produced using one of the portable grout plant production lines. Approximate pit and riser void volumes are calculated in Appendix C.

As part of Phase 2 grouting, risers not within an at-tank pit will be filled with a free-flowing grout. Due to the limited void volume in these risers, the required grout will be produced with a small capacity (250 to 400 gallons per hour) portable batch mixer located adjacent to the tank being stabilized (see vendor catalog sheet in Appendix A).

To conclude Phase 2 grouting, additional grout will be manually placed on the exposed risers and pits to provide a crowned surface to enhance water shedding. This grout will be produced using the small capacity portable batch mixer. The exposed grout surfaces will be covered by a weather sealed protective foam coating as is current practice for intrusion prevention.

6.1 PRE-GROUTING ACTIVITIES

Pre-grouting activities include those activities necessary to prepare the tanks and ancillary equipment for waste stabilization (Phase 1) and bulk tank fill (Phase 2) activities.

6.1.1 Removal and/or Disposition of In-Tank Equipment

Grout will be placed in tank 241-C-106 through the central riser R-13. The retrieval project plans to abandon an articulated mast in riser R-13. Disposition of the articulated mast must be accomplished for access to the riser for grout placement. The mast may either be removed and

disposed of as solid waste or size reduced and placed in the bottom of tank 241-C-106 for in-tank disposal. Evaluation of disposition options will be performed as part of detail design; however, removal of the mast was assumed for the purposes of this report. Removal of additional in-tank equipment from tank 241-C-106 is not required for either residual waste heel stabilization or tank fill.

The selected grout placement option is to place multiple lifts through the single central riser. Using the central riser is advantageous for tank 241-C-106 because of the 37.5-foot distance the grout needs to flow to reach the wall of the tank and to ensure complete fill due to the domed top of the tank.

The 241-C farm 200-series tanks do not have a central riser and do not have a domed top as shown in CE-SK-02-121. Riser R-9 is the closest to the center at a tank radius of 4 feet. Tanks 241-C-201, 241-C-202, and 241-C-204 have sludge jets in Riser R-9. Riser R-10, the next riser nearest the center of the tank, is at a radius of approximately 6 feet. Use of Riser R-10 requires that the grout be able to flow a distance of 14 feet to the far wall of the tank; well within that required for tank 241-C-106. Except for tank 241-C-204, Riser R-10 is empty. Therefore, Riser R-10 will be used for placement of grout in the 241-C farm 200-series tanks, and the unexpected piece of in-tank equipment (believed to be a multi-stage turbine pump) in Riser R-10 of tank 241-C-204 as identified by the in-tank video of June 26, 2002 needs to be removed.

Alternatively, the retrieval project may abandon an articulated mast in the available riser within the jet pump pit that will have to be dispositioned before grout placement. Like that for tank 241-C-106, disposition of the articulated masts within the 241-C farm 200-series tanks will be evaluated during detail design. For the purposes of this report it was assumed that the mast would be removed from each of the 241-C farm 200-series tanks.

6.1.2 Utilities Modifications/Upgrades

The portable, continuous-mix grout plant is designed for operation at remote locations and, as such, the majority of the plant's power requirements are met through onboard engines supplemented by a portable diesel generator.

The 296-P-16 portable exhauster receives power from the switchgear in the 241-CR-271 Building. This system is not code-compliant and is not recommended for reuse (RPP-7155). The portable exhauster for the ATCD Project will be installed in place of the existing 296-P-16 portable exhauster, but will not use the existing power source. The ATCD portable exhauster will receive temporary power via abovegrade cables from either the supply system installed for Project W-320 or from the upgraded system planned for the tank 241-C-106 retrieval task.

It is anticipated that the retrieval project will use the existing operations trailer MO-211 that has existing power and telephone services. The planned location of the vendor's portable grout plant and construction office trailer is near MO-211 as shown in CE-SK-02-101. Electric power and telephone service are required at the vendor's construction office trailer.

The portable grout plant requires 100 gal/min of water for grout production and for flushing the equipment. An existing 2-inch raw water line runs through the planned location for the portable grout plant to the 241-C-73 Air and Water Service Building (see CE-SK-02-101). Alternatively,

a fire hydrant is available in the corner of the planned site for the portable grout plant. Compressed air will be used to clean the grout slickline. The existing service air in the 241-C-73 building will be extended to the site of the portable grout plant.

6.1.3 Instrumentation System Modifications

No new instrumentation systems will be required for either residual waste heel stabilization or tank fill operations.

In-tank cameras will be used to monitor residual waste heel stabilization and tank fill activities until the fill height makes monitoring impractical. The existing in-tank imaging system design with new cameras will be used in the existing in-tank imaging access risers.

Temperature limitations will be maintained within limits by controlling the grout formulation and the grout pour lift height. As such, instrumentation to monitor in-tank temperatures is not required for process control but may be desirable for demonstration of selected grout formulations. Existing thermocouples will remain in place and may be monitored using the existing data collection system to verify that in-tank temperatures remain within specifications. Tank 241-C-203 does not have existing temperature measurement instrumentation. The experience gained from grouting tanks 241-C-201, 241-C-202, and 241-C-204 should provide the bases to grout tank 241-C-203 without monitoring temperatures.

The portable exhauster with stack monitor includes all instrumentation necessary to control the tank pressures and emissions within the identified constraints. Instrumentation communication and interlocks with the portable grout plant is not required. In the event that the portable exhauster is shut down, local alarms on the portable exhauster will alert operations personnel who will convey the order to shut down grout production.

6.1.4 Modification of Existing Pits

Structural modification of the existing pits is not required for Phase 1 grouting in either tank 241-C-106 or the 241-C farm 200-series tanks.

The tank 241-C-106 HVAC pit is located adjacent to the tank wall with the in-tank duct opening approximately 7 feet below the inside top of the dome. Active tank ventilation during Phase 2 grouting cannot be achieved through the HVAC pit. Modification of the tank 241-C-106 heel pit cover is required to maintain active ventilation while stabilizing the tank dome (see CE-SK-02-102). The heel pit riser (Riser R-13) extends into the tank approximately 3 inches. Without a means of allowing the trapped air to escape, grouting the tank to the bottom of Riser R-13 will leave a spherical cap void space. The void space can be eliminated by using a simple tool to provide a means for the trapped air to be displaced. Ventilation of the tank during the final topping off lift (Phase 2) will comprise sweeping air through the heel pit to capture the tank air displaced by the grout. The modifications to the heel pit are limited to modification of the pit cover to effect ventilation and for grout slickline access. Modifications to the other tank 241-C-106 pit covers are not required.

The 241-C farm 200-series tanks have a flat roof with the HVAC duct extending approximately 1 foot into the tank. Similar to tank 241-C-106, the final topping off grout lift may use an

expanding grout with a tool inserted in Riser R-10 to allow the trapped air to escape into the jet pump pit. Ventilation during the final grout lift (Phase 2) will comprise sweeping air through the jet pump pit to capture the tank air displaced by the grout. The modifications to the jet pump pit are limited to modification of the pit cover to effect ventilation and for grout slickline access (see CE-SK-02-122).

6.1.5 Ventilation System

As discussed in Section 3.2.7, the existing 296-P-16 portable exhauster connected to tank 241-C-106 is not recommended for reuse. The following presents the tank 241-C-106 ventilation configuration for Phase 1 grouting and Phase 2 grouting to the bottom of the HVAC duct extension into the tank. The 296-P-16 portable exhauster will be replaced with a new 500 standard ft^3/min portable exhauster that will be connected to the existing ductwork. The ventilation duct leading from tank 241-C-105 will be valved out. The existing 241-C-91 Process Building and its associated inlet filters will be valved out. The existing inlet filter on Riser R-15 will be used. This configuration will provide adequate ventilation during tank grouting operations and during large diameter riser maintenance.

Following placement of Phase 2 grout to a depth of approximately 23 feet, the air inlet riser (Riser R-2) will become blocked by grout and the ventilation scheme will need to be revised (see CE-SK-02-108). The following presents the ventilation configuration during tank 241-C-106 dome stabilization. Ductwork from the portable exhauster to the heel pit will be installed and the heel pit cover plate will be modified to allow air to be swept through the heel pit, thereby capturing the potentially contaminated air as it is being displaced by grout (see CE-SK-02-102). While grouting up to the dome, the only infiltration points are Risers R-13 and R-14. Adequate infiltration at the heel pit will be provided by a high capacity air filter to prevent excessive dust from reaching the HEPA filters at the portable exhaust skid. The in-tank camera will be removed.

The following presents the 241-C farm 200-series tanks ventilation configuration for Phase 1 grouting and Phase 2 grouting to the bottom of the HVAC duct extension into the tanks. The portable exhauster used on tank 241-C-106 will be relocated adjacent to the 241-C farm 200-series tanks and ducted to each of the existing HVAC pits through an abovegrade header as shown in CE-SK-02-120. Adequate infiltration at the jet pump pit will be provided by a high-capacity air filter to prevent excessive dust from reaching the HEPA filters at the portable exhaust skid (see CE-SK-02-122).

Following placement of Phase 2 grouting to a depth of approximately 25 feet at the center, the exhaust duct will become blocked by grout and the ventilation scheme will need to be revised. The following presents the ventilation configuration during 241-C farm 200-series tank stabilization. Ductwork from the portable exhauster header to the jet pump pit will be installed and the jet pump pit cover plate will be modified to allow air to be swept through the jet pump pit, thereby capturing the potentially contaminated air as it is being displaced by grout. The in-tank camera will be removed (see CE-SK-02-122).

6.1.6 Isolation of Piping and Ancillary Equipment

Except for the specified modifications to the ventilation system, there are no piping or ancillary equipment that need to be isolated before Phase 1 grouting in any of the ATCD tanks.

Before beginning Phase 2 grouting in tank 241-C-106, the cascade line between tanks 241-C-105 and 241-C-106 needs to be blocked to prevent grout from flowing into tank 241-C-105. The cascade line will be plugged by placing low slump, non-shrinking grout (possibly using a multiple step process) into the cascade line cleanout line to create an approximately 1-foot-long grout plug in the cascade line (see CE-SK-02-107). Placing the grout into the cleanout line nearest tank 241-C-106 will push the grout up the 3% slope in the cascade line. The volume of grout required for a 1-foot-long plug and to fill the cleanout line is approximately 5 gallons.

Each of the 241-C farm 200-series tanks has two waste pipelines entering the wall of the tank approximately 9 inches below the bottom of the tank's top closure. The waste pipes run to diversion box 241-C-252 with a total elevation change of 2.5 feet, sloping into the tank. Grout will enter the waste pipes while placing the final lift of Phase 2 grout in the 241-C farm 200-series tanks, but will not flow to the diversion box due to the elevation change. As such, isolating these pipes is not required before beginning Phase 2 grouting.

6.1.7 241-C Tank Farm Access and Staging Modifications

For personnel safety and portable grout plant site access control, a construction fence will be erected by Hanford Site construction forces. Additional staging area for the portable grout plant bulk materials and equipment will be provided across an existing gravel road. The road will be used for the following:

- Delivery of dry grout components
- Access to the portable grout plant site
- Potential use by other projects.

At least one gate across the gravel road will be used during grout production campaigns to prevent through traffic and allow bulk material transport from the staging area to the portable grout plant. The fence will be posted with the appropriate industrial hazards and personnel access limitations near all access points.

Bulk storage of dry materials, primarily sand, will be required. Hanford Site forces will obtain the necessary permits and clear the area of vegetation.

Flushing of the portable batch plant equipment in contact with the wet grout will be required upon completion of a grout production campaign. The portable continuous mix grout plant is cleaned by the introduction of crushed rock and approximately 500 gallons of water to the continuous mix auger equipment is collected at the mixing chamber discharge and disposed of as solid waste. The slickline is cleaned by forcing a hard sponge through the slickline and into the tank, using compressed air. With this design and cleaning operation, extensive flushing is only required for the grout pump. A designated area for a thorough flushing of the grout pump will be established. The grout pump flushing station will comprise a portable wastewater collection system to be defined during detail design. The wastewater generated by system flushing will be

pumped from the collection system to a suitable tanker truck provided by the Hanford Site. Transportation and treatment of the wastewater will be provided by the Hanford Site.

6.2 DELIVERY AND PLACEMENT SYSTEM – PHASE 1

The required configuration of tank 241-C-106 and ancillary equipment for Phase 1 grouting (stabilization of the residual waste heel) will be as follows. The site improvements to the staging area for bulk grout component storage and portable grout plant erection will have been completed. Hanford Site utilities (water and air) will be provided as required by the defined interface definitions. Hanford Site provided equipment and services (collection and transportation of solid waste and wastewater) will be available and staged for use. The portable grout plant will be mobilized in the identified staging area to the east of the 241-C tank farm. One or both grout production lines may be used during the residual waste heel stabilization operation.

The slickline will be constructed between the grout pump and the central tank riser (R-13) with a tremie approximately 18 feet long into tank 241-C-106. A 500 standard ft^3/min portable exhauster will be connected to the existing duct (leading to Riser R-2) where the removed 296-P-16 portable exhauster was previously connected. The ventilation isolation valves to tank 241-C-105 and the 241-C-91 Process Building will be closed. The isolation valve to the inlet filter on Riser R-15 will be open.

The configuration of the 241-C farm 200-series tanks for residual waste heel stabilization will be as follows. The site improvements and Hanford Site utilities and services will be provided as described above. The portable grout plant will be mobilized with one grout production line operational and calibrated. Slickline will be installed between the grout pump and Riser R-10 of each of the 241-C farm 200-series tanks with a tremie approximately 19-feet long. HVAC ducting will be provided to both the HVAC pit and the pump pit on each of the 241-C farm 200-series tanks with the duct to the HVAC pit active. The 500 standard ft^3/min portable exhauster will have been removed from the tank 241-C-106 installation and installed on the 241-C farm 200-series tanks ventilation system.

6.2.1 Waste Stabilization/Encapsulation

Approximately 12-inch layer of free-flowing grout will be placed into the tank (approximately 165 yd^3 for tank 241-C-106 and 12 yd^3 per 241-C farm 200-series tank) through a single tank riser using a tremie to limit the drop height. The grout will mix with or encapsulate the residual waste that is not fixed to the bottom of the tank. Multiple grout lifts may be used to form the waste stabilization layer. Each successive grout lift would capture a portion of the unbound residual waste at the grout to residual waste interface.

6.2.2 Fill System Control Parameters

Each grout component will be delivered to the grout mixing chamber through calibrated metering devices, providing control of the grout formulation and the volumetric production.

The lift height of the grout within each tank will be controlled by controlling the volumetric production of the grout. Once the specified volume of grout has been produced at the grout

plant, the plant will be shut down and the volume of grout in the slickline will be delivered to the tank using the slickline cleaning procedure. Confirmation of the lift height can be accomplished by observation via the in-tank video system or by the existing Enraf level gauge.

The temperature limits of the grout and tank will be controlled within the specified limits by controlling the grout formulation, the lift height, and the time between lifts. Confirmation of expected temperatures may be done by monitoring and recording the temperature data from the existing temperature probes in tanks 241-C-106, 241-C-201, 241-C-202, and 241-C-204.

The tank operating pressures will be controlled within the specified limits by the instrumentation included in the portable exhauster. Air emissions will be controlled within the specified limits by the air monitors on the portable exhauster.

6.2.3 Demonstration-Required Monitoring and Sampling

The portable grout plant meters all dry and wet components into the continuous mixing chamber. After mobilization and before grout production, each metering device will be calibrated to ensure proper grout formulation. Grab samples of the grout as it enters the pump can be obtained during production as dictated by the quality assurance requirements that will be defined during detail design.

The placement of the grout in the tank for residual waste heel stabilization will be monitored and recorded via in-tank video camera. Other data may be collected from existing instrumentation (e.g., temperature, level readings, tank pressures, emissions) as a record of the ATCD, but are not required for the residual waste heel stabilization operations.

6.3 DELIVERY AND PLACEMENT SYSTEM – PHASE 2

The required configuration of tank 241-C-106 and ancillary equipment for Phase 2 (bulk tank fill) is the same as that required for Phase 1 as described in Section 6.2 until the depth of the grout reaches 19 feet at the center of the tank (see CE-SK-02-108). For filling the remaining 12 feet of tank 241-C-106, the configuration will be as follows. The tremie will be removed from the end of the slickline and disposed of in tank 241-C-106. A tool will be inserted in Riser R-13 to allow trapped air to escape. The video camera will be removed from the tank. The ventilation system will be reconfigured to provide a sweeping action through the heel pit by closing the isolation valve in the duct from the portable exhauster to Riser R-2, closing the isolation valve to the inlet filters on Riser R-15, opening the isolation valve on the high flow inlet filter on the heel pit, and opening the isolation valve on the duct from the portable exhauster to the heel pit. Both grout production lines should be used during the residual waste heel stabilization operation in consideration of the production schedule; however, one grout production line may be used if one is out of service.

Phase 2 grouting of the 241-C farm 200-series tanks up to a depth of 19 feet at the center, the configuration will be the same as for Phase 1 discussed in Section 6.2 (see CE-SK-02-122). For bulk tank fill between 19 and 24 feet of depth at the center of the tank, the tremie will be removed from the slickline and disposed of in the tank. For the final grout lift, the camera will be removed, a tool will be inserted in Riser R-10 to allow trapped air to escape, and the ventilation will be reconfigured to provide sweeping action through the pump pit.

6.3.1 Bulk Tank Fill

Free-flowing grout will be placed into the tank up to within 1 foot of the tank ceiling. The lift height is limited only by structural integrity limitations of the tank due to the hydrostatic forces of the wet grout and the temperatures created by the heat of hydration of the setting grout. Grout lift limitations and required cure time between lifts will be determined during final design.

6.3.2 In-Tank Equipment Specific Stabilization/Encapsulation

All stabilization activities for the in-tank equipment and tank risers will be performed following bulk tank fill.

6.3.2.1 *Common to all ATCD Tanks*

The risers and at-tank pits will be filled with a free-flowing grout, followed by placement of a weather sealed grout with a crowned surface to prevent water intrusion.

The risers that are not in an at-tank pit and have no equipment in them will be stabilized by removing the blind flange and pouring in a free-flowing grout.

The thermocouple trees are constructed of a 2-inch pipe. In tanks 241-C-201, 241-C-202, and 241-C-203, the thermocouple trees are installed in a 12-inch riser and in tank 241-C-106, the two thermocouple trees will be installed in 4-inch risers. The thermocouple tree will be stabilized by removing the flange bolts, screwing off the tank riser flange, cutting off the thermocouple tree flush with the tank riser flange, and pouring in a free-flowing grout. The risers in which the thermocouple trees are installed will be stabilized by pouring a free-flowing grout into the annulus between the thermocouple tree and the riser.

Removal of the in-tank level measuring devices will be accomplished by dismounting the reeling system from the tank riser and cutting the tape above the riser opening, allowing the tape and end weight to fall into the riser. The open riser will then be stabilized by pouring in free-flowing grout.

6.3.2.2 Specific to Tank 241-C-106

The HVAC pit on tank 241-C-106 has 4 penetrations:

- Seal loop
- Breather filter
- Inlet filter
- HVAC duct.

Following removal and disposal of the HVAC pit cover plate along with the attached equipment, the HVAC pit will be stabilized by pouring free-flowing grout into the open HVAC pit (see CE-SK-02-111).

Stabilization of Riser R-2 will be accomplished by removing the attached duct and pouring in free-flowing grout.

The tank 241-C-106 heel pit consists of the single riser used in-tank stabilization operations. Connected to the heel pit cover plate are the HVAC duct and air filter installed for tank stabilization operations. Stabilization of the heel pit, Riser R-13, the pit drain, and any miscellaneous equipment in the pit will consist of removing and disposing of the heel pit cover plate and attached HVAC components and pouring free-flowing grout into the open heel pit (see CE-SK-02-111).

The tank 241-C-106 sluice pit has the sluicing assembly in a 12-inch riser and a recirculating dip leg in a 4-inch riser as shown in CE-SK-02-104. The recirculating dip leg is isolated by a remote nozzle seal. Jumper assemblies connect the 2 nozzles on the sluicing assembly to nozzles in the wall of the pit. The dip leg, sluicing assembly, and sluice pit will be prepared for stabilization by removing and disposing of the pit cover plate, removing the seal assembly from the dip leg, and removing the jumpers from the sluicing assembly. The seal assembly and the jumpers will be placed in the bottom of the pit for in-pit stabilization and disposal. Stabilization of the in-tank equipment, the pit, the pit drain, and any equipment in the bottom of the pit will be accomplished by pouring free-flowing grout into the open pit (see CE-SK-02-109).

The tank 241-C-106 pump pit has a 4-inch, a 12-inch, and a 36-inch riser containing a shield plug, failed transfer pump PT-X141, and the slurry pump, respectively as shown in CE-SK-02-105. A jumper connects the single nozzle on the slurry pump to a nozzle in the wall of the pit. The status of isolation of the failed transfer pump nozzle will be confirmed by the planned video inspections of the pump pit. Preparations for stabilization of the pump pit and associated in-tank equipment entails the removal and disposal of the pump pit cover plate, removal of the shield plug from Riser R-5, removal of the jumper to the slurry pump, and removal of the isolation blank on the failed transfer pump nozzle if present. The shield plug, jumper, and isolation blank will be placed in the bottom of the pit for in-pit stabilization and disposal. Stabilization of the pump pit, the pit drain, Riser R-5, the in-tank equipment, and any equipment in the bottom of the pit will be accomplished by pumping free-flowing grout into the open pit (see CE-SK-02-110).

6.3.2.3 Specific to 241-C Farm 200-Series Tanks

A breather filter is mounted on a riser at each of the 241-C farm 200-series tanks. These risers will be stabilized by pouring in free-flowing grout after removal of the breather filter assembly.

The HVAC pits on the 241-C farm 200-series tanks will have a single duct penetration added for tank stabilization activities. Following removal of the duct and the HVAC pit cover, the HVAC pit will be stabilized by pouring free-flowing grout into the open HVAC pit.

Per H-14-104175, there are no connected jumpers in the 241-C farm 200-series tanks pump pits. The sludge jet pumps installed in the 12-inch Riser R-9 in tanks 241-C-201, 241-C-202, and 241-C-204 each have 2 standard jumper connection nozzles that lead to the 3-inch and 4-inch flexible lines of the sludge jet pumps. The status of isolation of the sludge jet pump nozzles will be confirmed by the planned video inspections of the pump pits. Preparation for stabilization of the pump pit and associated equipment will consist of removing and disposing of the pump pit cover plate and removing isolation blanks from the nozzles on the sludge jet pump and placing them in the bottom of the pit, if present; Riser R-10 will remain open from the tank stabilization operations. Stabilization of the sludge jet pumps, Riser R-10, the pit, the pit drain, and any

miscellaneous equipment in the pump pit will be accomplished by pouring free-flowing grout into the open pump pit (see CE-SK-02-123).

6.3.2.4 Remaining Void Spaces

Due to the configuration of the in-tank equipment, the installation of the in-tank equipment in the risers, and the configuration of adapter plates and sleeves in the risers, relatively small void volumes will remain following the completion of all Phase 2 grouting.

As an example, Riser R-9 (tank 241-C-106 slurry pump riser) is comprised of a 36-inch diameter sleeve in a 42-inch diameter opening between the pump pit and the dome of the tank. By design, this annular void space does not communicate with the interior of the tank. The annular space between the in-tank equipment and their associated risers remains void of stabilizing grout as identified in Table 6.1 (see CE-SK-02-110). The requirements for filling all accessible voids and the details to accomplish this will be addressed during detail design. The preliminary engineering report includes a rough order of magnitude cost estimate for filling all void spaces.

Table 6.1. In-Tank Equipment/Riser Void Space

Tank	Riser	Riser Dimensions (in.)	Equipment	Equipment Dimensions
241-C-106	R-3	12	Sluicing assembly	Three items with estimated nominal diameters of 3 in., 3.5 in., 4 in.
241-C-106	R-4	4 in. with pit drain (2 in., sch. 40)	Recirculating dip leg	3 in. diameter, schedule 40 pipe
241-C-106	R-6	12	Failed transfer pump PT-X141	4 in. diameter pipe (estimated)
241-C-106	R-9	36	Slurry pump	4 in. diameter pipe, schedule 40 pipe
241-C-201	R-9	12 in. with pit drain (2 in., sch. 40)	Sludge jet	Two items: 3 in. and 4 in. diameter pipe
241-C-202	R-9	12	Sludge jet	Two items: 3 in. and 4 in. diameter pipe
241-C-204	R-9	12	Sludge jet	Two items: 3 in. and 4 in. diameter pipe

6.3.3 Fill System Control Parameters

The lift height of the grout within the tank will be controlled by controlling the volumetric production of the grout. Once the specified volume of grout has been produced at the grout plant, the plant will be shut down and the volume of grout in the slickline delivered to the tank using the slickline cleaning procedure. Confirmation of the lift height can be accomplished by

observation via the in-tank video system or by the existing Enraf level gauge until the depth of the grout requires that the video camera be removed.

The temperature limits of the grout and tank will be controlled within the specified limits by controlling the grout formulation and the lift height. Confirmation of expected temperatures can be done by monitoring and recording the temperature data from the existing temperature probes in tanks 241-C-106, 241-C-201, 241-C-202, and 241-C-204. In tank 241-C-106, the uppermost thermocouple is approximately 6 feet below the tank dome.

The tank operating pressures will be controlled within the specified limits by the instrumentation included in the portable exhauster until the depth of the grout requires that the ventilation system be reconfigured to provide sweeping air through the heel pit to capture the air displaced by the grout. Air emissions will be controlled within the specified limits by the air monitors on the portable exhauster.

6.3.4 Demonstration Required Monitoring, Sampling, and Instrumentation

Calibration of the metering devices delivering grout components to the mixing chamber will be required periodically to ensure that the grout is produced within the grout formulation specification parameters. Samples of the grout will be taken throughout grout production as dictated by the quality assurance requirements. Required calibration periods and sampling rates will be determined during detail design.

Grout placement operations will be visually monitored via an in-tank imaging system to provide confirmation of fill height and general progression of the tank closure activities. Optionally, other information such as temperatures, level readings, tank pressures, emissions, and climatic data may be recorded for demonstration purposes but is not required for production and placement of the grout.

6.3.5 Data Collection During and After Tank Fill Operations

The data collected during Phase 1 and 2 grouting operations will include the portable grout plant calibration data, test data on grab samples of grout taken from the discharge of the grout plant mixing chamber throughout grout production, in-tank video record and optionally, temperature data, tank pressure data, and emissions data as described in the preceding sections.

Continued monitoring of tank 241-C-106 dome elevation can be accomplished using the existing benchmark on Risers R-1 and R-14, which are not disturbed by tank stabilization activities. Similarly, elevations of the 241-C farm 200-series tanks can be monitored by installing a benchmark on the corner of the pump pit following tank stabilization activities. The need for additional benchmarks on each tank will be evaluated during detail design.

Beyond continual groundwater monitoring and tank elevation monitoring of the 241-C tank farm, no data collection requirements have been identified following filling of the tank.

6.4 POST-GROUTING ACTIVITIES

Following completion of tank, equipment, and riser/pit stabilization (Phase 1 and 2 grouting) interim isolation type measures will be performed to prevent water intrusion during the period of time between tank closure and construction of the closure barrier. The pit and riser covers will be disposed of leaving a crowned grout surface at the top of the existing riser/pit. To prevent water from infiltrating into any spaces along the grout-to-riser or grout-to-pit-wall interface the tops of the risers/pits will be weather sealed. Additionally, any disturbed areas impacting the interim surface barriers (planned for installation by the Tank Farm Vadose Zone Project) will be repaired.

Although not in the scope of the closure demonstration, construction of the closure barrier will involve the placement of large amounts of earthen materials using heavy construction equipment. Abovegrade ancillary equipment will need to be removed from above the tanks for placement of the closure barrier. The at-tank pits and the risers that are not in a pit typically protrude 1 foot above grade. The closure barrier can be constructed over these items without the need to remove them to grade level. All ancillary equipment protruding above the at-tank pits and the risers must be removed. Other ancillary equipment including the abovegrade ventilation system, the 241-C-91 Process Building, and electrical and instrumentation equipment and cabinets will need to be removed to grade or support pad level. This demolition will be planned when the tank farm closure is in the detail design phase.

This page intentionally left blank.

7.0 PROJECT DEVELOPMENT AND EVALUATION OF OPTIONS

A structured process was used to identify, evaluate, and select a single concept for delivery, production, and placement of grout to stabilize the residual waste in the closure demonstration tanks. Review of concepts developed at other DOE sites and brainstorming sessions were used to identify a range of alternatives for delivery and placement of the grout. The alternatives were then evaluated and ranked using a set of decision criteria. Additional detail on the alternatives and the evaluation process is provided in Appendix E. Addition of dry solids to stabilize the waste heel or eliminate free liquid was not included.

The decision criteria used to evaluate options included the following:

- Safety
- Compliance with the technical requirements in the Level 2 Specification
- Operability
- Technical risk
- Programmatic risk
- Deployment schedule risk
- Cost.

Three components to delivery and placement of grout into the tanks were considered in identifying and developing options: delivery and production of grout mixtures, delivery of grout to the tank, and placement/stabilization of residual waste in the tank.

The options identified for the production and delivery of grout to the site included the following:

- Pre-mix trucks delivering grout to the site. This option would involve offsite production of the grout mix and delivery to the site in trucks with capacities of 8 to 10 yd^3 ready for placement into the tanks.

- Onsite centrally located batch plant combined with onsite trucking. This option would involve the construction of a centrally located facility designed to support future tank closures. This would be a permanent facility that would require staffing, permitting, and maintenance for future use. Onsite trucks would be used to transport the grout mixture from the batch plant to the tank farm.

- Portable batch plant located at the tank farm. This option would involve setting up a portable batch plant next to or near the 241-C tank farm. The batch plant would be used to mix and produce grout in a batch mode for placement in the tanks.

- Portable continuous batch/mix plant at the tank farm. This option would involve setting up a portable plant designed to produce a continuous mixture of grout for placement in the tanks.

The options identified for delivering grout to the tanks included the following:

- Truck delivery to the tank. This option would involve bringing the grout trucks into the 241-C tank farm and delivering the grout mixture to the tank riser(s)

- Pipeline delivery by pumping grout from outside the tank through a slickline. This option would involve placement of a grout pump outside the tank farm fenceline and pumping grout to the tank through a pipe or hose located on the ground.

- Pipeline delivery by pumping grout using a truck-mounted boom pump. This option would involve using a pumper truck with a long reach boom located outside the tank farm to place grout into the tank(s).

The options considered for placement of grout in the tanks to stabilize the residual waste included the following:

- Gravity fill with a tremie (hose) from one location in a single lift. This option would involve placement of a predetermined amount of grout into the tank through a single central location to stabilize the residual heel in a single step.

- Gravity fill with a tremie from one location in two lifts. This option would involve placement of grout into the tank through a single central location to stabilize the residual heel in two lifts with the intention of sandwiching any residual waste displaced by the first lift with the second lift to macro encapsulate the waste.

- Gravity fill with a tremie from one location in multiple lifts. This option is similar to the two-lift option except multiple lifts would be utilized to displace/mix the residual waste.

- Gravity fill with a tremie from multiple locations – two or more lifts. This option would involve placement of grout into the tank through multiple locations in an attempt to move the residual waste toward the center of the tank and macroencapsulate the waste.

- Single point injection using low pressure (approximately 350 lb/in^2). This option would involve injecting grout into the tank through a rotating nozzle with the intent of using the grout stream to mobilize and mix the residual waste and microencapsulate the residual waste.

- Multi-point injection using high pressure (approximately 6,000 lb/in^2). This option would involve using the patented Multi-Point Injection™ system with multiple nozzles and high pressure injection to aggressively mobilize, mix, and encapsulate the residual waste in the grout material.

- In-tank mechanical mixing. This option would involve placement of grout into the tank followed by deployment of mechanical mixing equipment (robotics or mechanical mixers) to stir the grout in an attempt to mix the residual waste and grout material before the grout sets.

- In-tank mixer pump. This option would involve utilizing a recirculating mixer pump (similar in concept to the double-shell tank mixer pumps) to mix the residual waste with the grout material before the grout sets.

Based on the alternative evaluation and ranking, the grout delivery and placement system selected for development in the preliminary engineering and presented in this report comprises the following:

1. A continuous batching/mixing plant located just outside the tank farm.
2. Delivery of the grout to the tanks by pumping the grout through a slickline to the tank.
3. Gravity filling the tanks from a single location using multiple lifts.

This page intentionally left blank.

8.0 COST AND SCHEDULE

The estimate prepared for this report is a planning/study estimate that has been developed for preliminary budgetary and scoping purposes. It has been prepared before conceptual design activity and is considered a Preliminary Stage Estimate. DOE guidance brackets this stage of estimate for an operating project to within an accuracy and completeness range of -30% to +60%. The estimate was prepared using activity-based cost (ABC) methodology. This effort was facilitated by the development of a WBS and lower-level schedule activities. The WBS structure developed for tank closure activities is provided in Appendix A.

8.1 ESTIMATE RATES AND FACTORS

The estimate has been prepared in FY 2002 dollars. An escalation factor of 4.45% has been applied to bring the estimate to FY 2004 dollars when the work will be performed. Escalation is based on DOE guidance (as of January 2, 2002) for DOE projects under the operations and maintenance category. Escalation is derived from a 1.8% factor for FY 2003 and a 2.6% factor for FY 2004 compounded to yield 4.45%. A contingency factor of 40% has been applied to the estimate based on DOE guidance contained in DOE O 430 1.1 for a first-of-a-kind (special conditions) planning stage estimate. Rates and factors used in the estimate are based on data provided by CH2M HILL Hanford Group, Inc. (CH2M HILL), Fluor Hanford, and based on average and typical construction forces labor rates and factors. The cost estimate is not a total project cost and covers only the activities identified in the WBS and in the schedule provided in Appendix A.

8.2 ESTIMATE SUMMARY

Table 8.1 contains a summary of the estimate, which has been categorized by the draft WBS. Additional summaries, the detailed cost estimate, detailed estimating assumptions, and estimating rates and factors used to develop the estimate are included in Appendix A. The total estimated costs for tank closure exceed the value for minor projects.

Table 8.1. Summary of Accelerated Tank Closure Demonstration Cost Estimate for Tank Closure Activities

Closure Engineering Report Portion[a, b]						
WBS Title	Base Cost ($)	Escalation		Contingency		Total Cost
		%	Cost ($)	%	Cost	
Procurement	2,981,702	4.45	132,686	40	1,245,755	4,360,143
Construction	6,835,007	4.45	304,158	40	2,855,666	9,994,831
Operations	2,297,001	4.45	102,217	40	959,687	3,358,905
Other Project Costs	125,421	4.45	5,581	40	52,401	183,403
Project Closeout	148,754	4.45	6,620	40	62,149	217,523
Total Estimate						18,115,000

[a]Excludes Project Management, Project Definition, Preliminary Engineering, Detailed Design, Readiness Review, and Nuclear Safety & Licensing which are being developed by CH2M HILL Hanford Group, Inc.

[b]Post-closure monitoring is excluded from the total project cost.

WBS = work breakdown structure.

8.3 ESTIMATING ASSUMPTIONS AND EXCLUSIONS

Several major estimating assumptions and exclusions have been made for the development of this estimate. Major estimating assumptions include a method of accomplishment employing several contracting strategies. These include procurement vendors, construction management and construction forces services, architect/engineer design and engineering services, and CH2M HILL plant forces staffing. It has been assumed that the overall management of the project and the individual contracting of vendor services and materials for the project will be performed by CH2M HILL. More specific assumptions can be found in the detailed cost estimate. Major exclusions from the estimate are the estimates for WBS elements: Project Management, Project Definition, Preliminary Engineering, Detailed Design, Readiness Review, and Nuclear Safety & Licensing. These estimated are being prepared and compiled by the ATCD Project outside of this Basis of Design report. No CH2M HILL fee is included in the estimate. Also, the post-closure monitoring activity is not included in the total project cost.

8.4 BASIS OF ESTIMATE

The technical basis contained in this report form the basis for the scope contained in the estimate. The basis for the development of individual cost estimates has several primary sources. These include the following:

- Vendor quotations
- Historical tank farm experience
- Actual costs

- Data derived from other recent projects of a similar nature
- Engineering and operations expertise and subject matter expert input.

8.5 PROJECT RISK EVALUATION AND CONTINGENCY ANALYSIS

Project cost uncertainties were considered during the preparation of this estimate. These considerations form the basis for the application of contingency to this estimate. Contingency is a provision for unforeseeable elements of cost, which may result from incomplete design, unforeseen or unpredictable conditions, or uncertainties within the defined project scope.

Project risk management will be executed through the process of a formal risk assessment and analysis. This will be conducted on the project during detailed design, at which time further risk measurement will occur and risk mitigation strategies will be employed. The results of this effort would be incorporated into future estimates.

8.6 PROJECT SCHEDULE

A detailed project schedule for the tank closure activities is provided in Appendix A.

The schedule shows completion of tank closure activities consistent with the overall project schedule to close tank 241-C-106 by March 30, 2004 and to close the 241-C farm 200-series tanks by December 31, 2004. This schedule is very aggressive for first-of-a-kind activities.

This page intentionally left blank.

9.0 REFERENCES

10 CFR 61, "Licensing Requirements for Land Disposal of Radioactive Waste," *Code of Federal Regulations*, as amended.

10 CFR 830, "Nuclear Safety Management," *Code of Federal Regulations*, as amended.

10 CFR 1021.211, "Interim actions: Limitations on actions during the NEPA process," *Code of Federal Regulations*, as amended.

40 CFR 1505, "NEPA and Agency Decision Making," *Code of Federal Regulations*, as amended.

40 CFR 1506.1, Limitations on actions during the NEPA process," *Code of Federal Regulations*, as amended.

Atomic Energy Act of 1954, 42 USC 2011 et seq., as amended.

DOE M 435.1-1, 2001, *Radioactive Waste Management Manual*, U.S. Department of Energy, Washington, D.C.

DOE O 435.1, 2001, *Radioactive Waste Management Manual*, U.S. Department of Energy, Washington, D.C.

DOE/ORP-2001-18, 2001, *Single-Shell Tank System Closure Work Plan*, Rev. 0, U.S. Department of Energy, Office of River Protection, Richland, Washington.

Ecology, EPA, and DOE, 1989, *Hanford Federal Facility Agreement and Consent Order*, as amended, Washington State Department of Ecology, U.S. Environmental Protection Agency, and U.S. Department of Energy, Olympia, Washington.

H-2-2929, 1955, "Waste Fill Lines & Clean Outs 1st Cycle Waste 241-C Tank Farm," Rev. 0, General Electric, Richland, Washington.

H-2-31750, 1998, "Piping Material Code Reference Index," Rev. 3, Sheet 1A, Westinghouse Hanford Company, Richland, Washington.

H-2-31750, 1998, "Piping Material Code Reference Index," Rev. 1, Sheet 1B, Westinghouse Hanford Company, Richland, Washington.

H-2-31750, 1991, "Piping Material Code Reference Index," Rev. 0, Sheet 1C, Westinghouse Hanford Company, Richland, Washington.

H-2-31750, 1998, "Piping Material Code Reference Index," Rev. 0, Sheet 64, Lockheed Martin Hanford Company, Richland, Washington.

H-2-31750, 1998, "Piping Material Code Reference Index," Rev. 0, Sheet 65, Lockheed Martin Hanford Company, Richland, Washington.

H-2-31750, 1998, "Piping Material Code Reference Index," Rev. 0, Sheet 66, Lockheed Martin Hanford Company, Richland, Washington.

H-2-34304, 1991, "Thermocouple Probe Standard," Rev. 6, Atlantic Richfield Hanford Company, Richland, Washington.

H-2-41267, 1952, "Mech Equip Sub Assy Slurry Pump Adapter Ring," Rev. 1, The Kellex Corporation, Richland, Washington.

H-2-41295, 1953, "Mechanical Equipment – Sub-Assembly – Heel Jet Adapter Ring," Rev. 3, The Kellex Corporation, Richland, Washington.

H-2-41311, 1952, "Mechanical Equipment – Sub-Assembly – Sluicing Adapter Ring," Rev. 2, The Kellex Corporation, Richland, Washington.

H-2-41318, 1952, "Mech Equip Assembly Recirc Dip Legs Waste Metal Removal," Rev. 2, The Kellex Corporation, Richland, Washington.

H-2-41319, 1952, "Mech Equip Detail Dipleg Adapter Ring," Rev. 1, The Kellex Corporation, Richland, Washington.

H-2-44006, 1952, "Cascade Lines Clean Out," Rev. 0, General Electric, Richland, Washington.

H-2-73352, 1986, "Piping Waste Tank Isolation 241-C-201," Rev. 2, Vitro Engineering Corporation, Richland, Washington.

H-2-73353, 1986, "Piping Waste Tank Isolation 241-C-202," Rev. 2, Vitro Engineering Corporation, Richland, Washington.

H-2-73354, 1986, "Piping Waste Tank Isolation 241-C-203," Rev. 2, Vitro Engineering Corporation, Richland, Washington.

H-2-73355, 1986, "Piping Waste Tank Isolation 241-C-204," Rev. 2, Vitro Engineering Corporation, Richland, Washington.

H-2-817634, 2001, "Instm Enraf Nonius Assy Installation & Riser Sched," Rev. 16, Office of River Protection, Richland, Washington.

H-2-818470, 1998, "HVAC Tank C-106 Ventilation Plan," Rev. 3, ICF Kaiser Hanford Company, Richland, Washington.

H-2-818494, 1998, "Piping Pump & Winch Install C Tank & Drawing List," Rev. 1, ICF Kaiser Hanford Company, Richland, Washington.

H-2-818519, 1998, "Piping Service Piping Plan and Detail," Rev. 1, ICF Kaiser Hanford Company, Richland, Washington.

H-2-818530, 1998, "Piping Air & Water Service Bldg Compressor Plan & Section," Rev. 2, ICF Kaiser Hanford Company, Richland, Washington.

H-2-818531, 1998"Air & Water Service Bldg Plan & Sections," Rev. 2, ICF Kaiser Hanford Company, Richland, Washington.

H-2-818549, 1990, "Piping Sluicer Installation," Rev. 1, ICF Kaiser Hanford Company, Richland, Washington.

H-2-818572, 1998, "Instrumentation A & W Service Building Plan Det & Elevations," Rev. 1, ICF Kaiser Hanford Company, Richland, Washington.

"Hazardous Waste Management Act," RCW 70.105, *Revised Code of Washington*, as amended.

HNF-EP-0182, 2002, *Waste Tank Summary Report for Month Ending February 28, 2002*, Rev. 166, CH2M HILL Hanford Group, Inc., Richland, Washington.

HNF-IP-0842, 2002, *RPP Administration*, CH2M HILL Hanford Group, Inc., Richland, Washington.

HNF-IP-1266, 1997, *Tank Farms Operations Administrative Controls*, Rev. 1, CH2M HILL Hanford Group, Inc., Richland, Washington.

HNF-SD-WM-SP-012, 2001, *Tank Waste Remediation System Operation and Utilization Plan to Support Waste Feed Delivery*, Rev. 3A, CH2M HILL Hanford Group, Inc., Richland, Washington.

HNF-SD-WM-TSR-006, 2002, *Tank Waste Remediation System Technical Safety Requirements*, Rev. 2-I, CH2M HILL Hanford Group, Inc., Richland, Washington.

HW-72743, 1978, "75'-0" Dia Storage Tanks T-U-B-& C Arrangement," Rev. 19, Hanford Engineer Works, Richland Washington.

JEG-02-016, 2002, *Accelerated Single Shell Tank Retrieval and Closure Demonstration Plan*, Predecisional Draft, prepared for CH2M HILL Hanford Group, Inc. by Jacobs Engineering Group Inc., Richland, Washington.

National Environmental Policy Act of 1969, Public Law 91-190, 42 USC 4321 et seq.

Resource Conservation and Recovery Act of 1976, Public Law 94-580, 90 Stat. 2795, 42 USC 901 et seq.

RPP-5687, 2000, *Waste Retrieval Sluicing System (WRSS) and Project W-320, Tank 241-C-106 Sluicing, Lessons Learned*, Rev. 0, CH2M HILL Hanford Group, Inc., Richland, Washington.

RPP-7155, 2000, *C Tank Farm and Tank 241-C-104 Systems and Components Functionality Assessment Report*, Rev. 0, CH2M HILL Hanford Group, Inc., Richland, Washington.

RPP-11094, 2002, *Tank Closure Fill System for the Accelerated Tank Closure Demonstration Level 2 Specification*, Rev. 0, CH2M HILL Hanford Group, Inc., Richland, Washington.

RPP-12194, 2002, *Tank Alternative Closure Demonstration Project Alternative Generation and Analysis*, Rev. 0, CH2M HILL Hanford Group, Inc., Richland, Washington.

SL-92-21, 2002, *Grout for Closure of the Demonstration Vault at the U.S. DOE Hanford Facility*, Department of the Army, Waterways Experiment Station, Corps of Engineers.

Toxic Substances Control Act of 1976, 15 USC 2601, et seq.

WAC 173-303, "Dangerous Waste Regulations," *Washington Administrative Code*, as amended.

WAC 173-480, "Air Pollution Control Regulations," *Washington Administrative Code*, as amended.

WSRC-TR-2001-00359, 2001, *State of the Art Report on High-Level Waste Tank Closure (U)*, Westinghouse Savannah River Company, Aiken, South Carolina, July.

APPENDIX A
COST AND SCHEDULE DETAIL

This page intentionally left blank.

APPENDIX A
COST AND SCHEDULE DETAIL

A1.0 INTRODUCTION

The estimate that has been prepared for this Basis of Design report is a planning/study estimate, which has been developed for preliminary budgetary purposes. The U.S. Department of Energy rackets this stage of estimate within an accuracy of -30% to +60%. It is recognized that there are a number of parallel efforts currently underway within the Accelerated Tank Closure Demonstration (ATCD) Project that could affect the cost estimate. Among the things that could impact the cost estimate include the tank fill material, overall project schedule for stabilizing the heel and then closing the tank, and the amount and type of data collected during the demonstration.

The estimate was prepared using activity-based cost methodology. To facilitate the identification of specific work elements a work breakdown structure (WBS) was developed. The WBS structure developed for the activities associated with closing the five demonstration tanks is provided in Figure A.1. It is important to note that the WBS covers the work scope included in the Basis of Design report and is not a complete WBS for the ATCD Project.

A2.0 COST ESTIMATE SUMMARY

A summary of the cost estimate is provided in Table A.1 with a breakout by WBS element.

A3.0 PROJECT SCHEDULE

A project schedule was developed to support development and execution of the planned activities for closing the five demonstration tanks and is provided as Figure A.2.

A4.0 ESTIMATING ASSUMPTIONS AND EXCLUSIONS

Several major estimating assumptions and exclusions have been made for the development of this estimate. Major estimating assumptions include a method of accomplishment employing several contracting strategies. These include procurement vendors, construction management and construction forces services, architect/engineer design and engineering services, and CH2M HILL Hanford Group, Inc. (CH2M HILL) plant forces staffing. It has been assumed that the overall management of the project and the individual contracting of vendor services and materials for the project will be performed by CH2M HILL. More specific assumptions can be found in the individual cost estimating input sheets. Major exclusions from the estimate are the estimates for WBS elements: Project Management; Project Definition; Preliminary Engineering; Detailed Design; Readiness Review; and Nuclear Safety & Licensing. These estimated are being prepared and compiled by the ATCD Project outside of this basis of design activity. No CH2M HILL fee is included in the cost estimate. Also, the Post Closure Monitoring activity is not

included in the total project cost. It is important to note that this estimate is not a total project cost and does not include a number of activities associated with the ATCD (i.e., waste retrieval). The intent of the cost estimate in this Basis of Design report is to provide a cost estimate for the field activities associated with tank closure that could be used as an input to improve the basis of the overall project cost estimate.

A5.0 COST ESTIMATING INPUT SHEETS

The cost estimating input sheets on the following pages are organized by WBS number and contain the basis for the cost estimate at the detail level.

Figure A.1. Tank Closure Work Breakdown Structure

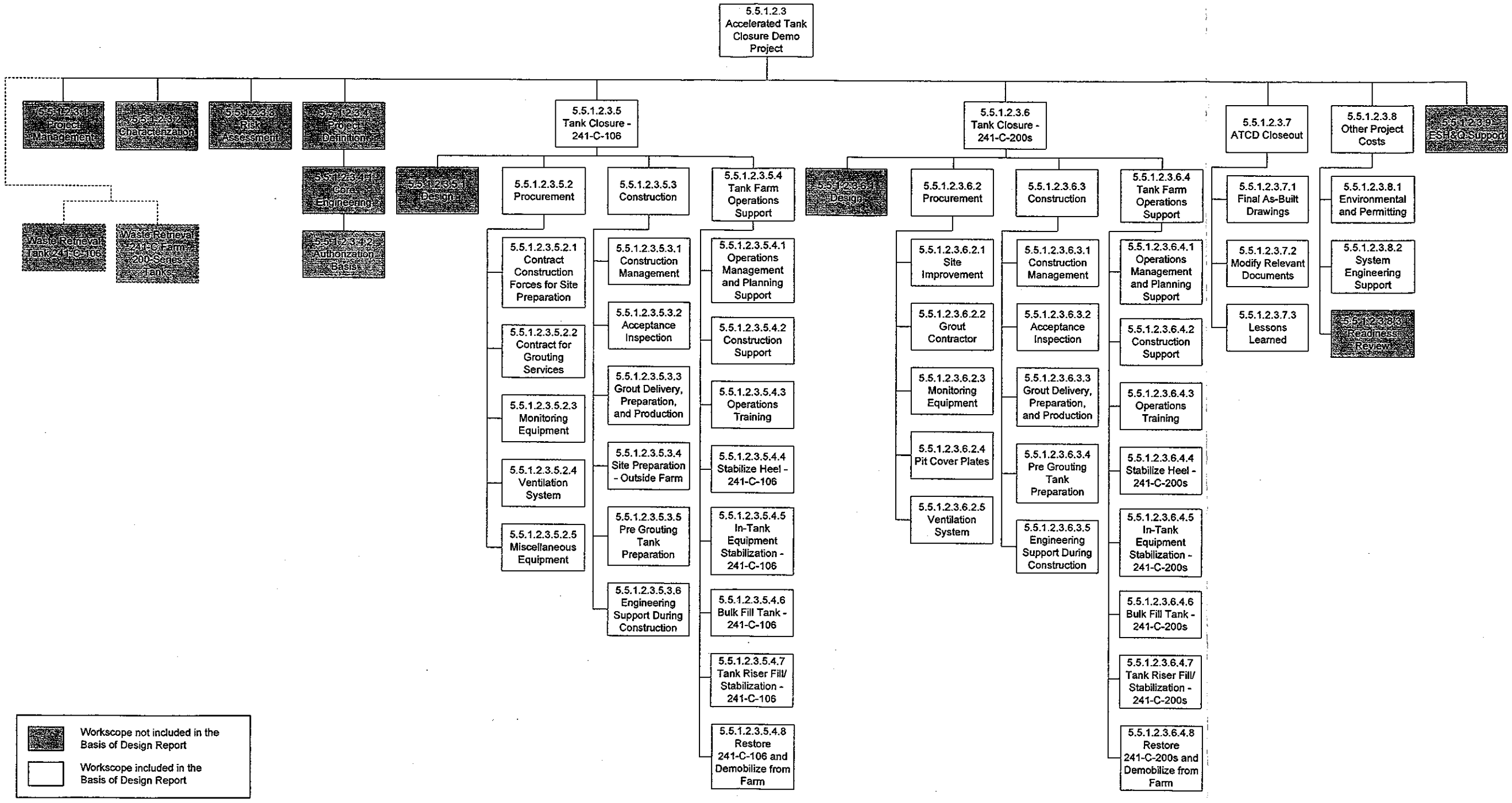

Table A.1. Tank Fill Basis of Design Cost Estimate Summary (3 Sheets)

WBS Number	Title	Base Est. FY02 dollars	Escalation to FY04 at 4.45%	Contingency at 40%	Total Estimated Cost
5.5.1.2.3.5	Tank Closure 241-C-106				
5.5.1.2.3.5.2	Procurement				
5.5.1.2.3.5.2.1	Contract Const. Forces	$31,779	$1,414	$13,277	$46,470
5.5.1.2.3.5.2.2	Contract Grouting Svcs	$32,566	$1,449	$13,606	$47,621
5.5.1.2.3.5.2.3	Monitoring Equip	$43,062	$1,916	$17,991	$62,970
5.5.1.2.3.5.2.4	Ventilation System	$2,203,075	$98,037	$920,445	$3,221,557
5.5.1.2.3.5.2.5	Miscellaneous Equip	$21,834	$972	$9,122	$31,928
5.5.1.2.3.5.2 Subtotal		**$2,332,316**	**$103,788**	**$974,442**	**$3,410,546**
5.5.1.2.3.5.3	Construction				
5.5.1.2.3.5.3.1	Const. Mgmt	$211,858	$9,428	$88,514	$309,800
5.5.1.2.3.5.3.2	Acceptance Insp.	$105,929	$4,714	$44,257	$154,900
5.5.1.2.3.5.3.3	Grout delivery, prep, product.	$866,100	$38,541	$361,857	$1,266,498
5.5.1.2.3.5.3.4	Site Prep - Outside Farm	$122,214	$5,439	$51,061	$178,714
5.5.1.2.3.5.3.5	Pre Grouting Tank Prep	$937,089	$41,700	$391,516	$1,370,305
5.5.1.2.3.5.3.6	Engineering Support	$133,827	$5,955	$55,913	$195,695
5.5.1.2.3.5.3 Subtotal		**$2,377,017**	**$105,777**	**$993,118**	**$3,475,912**
5.5.1.2.3.5.4	Tank Farm Ops Support				
5.5.1.2.3.5.4.1	Ops Mgmt and Planning Suppt	$325,617	$14,490	$136,043	$476,150
5.5.1.2.3.5.4.2	Construction Support	$24,600	$1,095	$10,278	$35,973
5.5.1.2.3.5.4.3	Ops Training	$38,566	$1,716	$16,113	$56,395
5.5.1.2.3.5.4.4	Stabilize Heel 241-C-106	$99,338	$4,421	$41,503	$145,262
5.5.1.2.3.5.4.5	In-Tank Equip Stabilization	$532,320	$23,688	$222,403	$778,412
5.5.1.2.3.5.4.6	Bulk Fill Tank - 241-C-106	$65,855	$2,931	$27,514	$96,300
5.5.1.2.3.5.4.7	Tank Riser Fill/Stabilization	$88,683	$3,946	$37,052	$129,681
5.5.1.2.3.5.4.8	Restore Surf/Demob	$123,149	$5,480	$51,452	$180,081
5.5.1.2.3.5.4 Subtotal		**$1,298,128**	**$57,767**	**$542,358**	**$1,898,253**
5.5.1.2.3.5 Tank 241-C-106 Subtotal		$6,007,461	$267,332	$2,509,917	$8,784,710

Table A.1. Tank Fill Basis of Design Cost Estimate Summary (3 Sheets)

WBS Number	Title	Base Est. FY02 dollars	Escalation to FY04 at 4.45%	Contingency at 40%	Total Estimated Cost
5.5.1.2.3.6	Tank Closure C-200s				
5.5.1.2.3.6.2	Procurement				
5.5.1.2.3.6.2.1	Contract Const. Forces	$88,980	$3,960	$37,176	$130,115
5.5.1.2.3.6.2.2	Contract Grouting Svcs	$0	$0	$0	$0
5.5.1.2.3.6.2.3	Monitoring Equip	$172,246	$7,665	$71,964	$251,875
5.5.1.2.3.6.2.4	Cover Plates	$266,860	$11,875	$111,494	$390,229
5.5.1.2.3.6.2.5	Ventilation System	$121,300	$5,398	$50,679	$177,377
5.5.1.2.3.6.2 Subtotal		**$649,386**	**$28,898**	**$271,313**	**$949,597**
5.5.1.2.3.6.3	Construction				
5.5.1.2.3.6.3.1	Const. Mgmt	$593,200	$26,397	$247,839	$867,436
5.5.1.2.3.6.3.2	Acceptance Insp.	$296,600	$13,199	$123,919	$433,718
5.5.1.2.3.6.3.3	Grout delivery, prep, product.	$468,300	$20,839	$195,656	$684,795
5.5.1.2.3.6.3.4	Pre Grouting Tank Prep	$2,966,063	$131,990	$1,239,221	$4,337,274
5.5.1.2.3.6.3.5	Engineering Support	$133,827	$5,955	$55,913	$195,695
5.5.1.2.3.6.3 Subtotal		**$4,457,990**	**$198,381**	**$1,862,548**	**$6,518,919**
5.5.1.2.3.6.4	Tank Farm Ops Support				
5.5.1.2.3.6.4.1	Ops Mgmt and Planning Suppt	$79,055	$3,518	$33,029	$115,602
5.5.1.2.3.6.4.2	Construction Support	$26,360	$1,173	$11,013	$38,546
5.5.1.2.3.6.4.3	Ops Training	$0	$0	$0	$0
5.5.1.2.3.6.4.4	Stabilize Heel 241-C-106	$158,940	$7,073	$66,405	$232,418
5.5.1.2.3.6.4.5	In-Tank Equip Stabilization	$458,716	$20,413	$191,652	$670,780
5.5.1.2.3.6.4.6	Bulk Fill Tank - 241-C-106	$59,270	$2,638	$24,763	$86,671
5.5.1.2.3.6.4.7	Tank Riser Fill/Stabilization	$79,815	$3,552	$33,347	$116,713
5.5.1.2.3.6.4.8	Restore Surf/Demob	$136,717	$6,084	$57,120	$199,921
5.5.1.2.3.6.4 Subtotal		**$998,873**	**$44,450**	**$417,329**	**$1,460,652**
5.5.1.2.3.6 Closure C-200 Series Subtotal		$6,106,249	$271,728	$2,551,191	$8,929,168

Table A.1. Tank Fill Basis of Design Cost Estimate Summary (3 Sheets)

WBS Number	Title	Base Est. FY02 dollars	Escalation to FY04 at 4.45%	Contingency at 40%	Total Estimated Cost
5.5.1.2.3.7	ATCD Closeout				
5.5.1.2.3.7.1	Final As-Builts	$70,774	$3,149	$29,569	$103,493
5.5.1.2.3.7.2	Modify Documents	$37,010	$1,647	$15,463	$54,120
5.5.1.2.3.7.3	Lessons Learned	$17,637	$785	$7,369	$25,791
5.5.1.2.3.7 Subtotal		**$125,421**	**$5,581**	**$52,401**	**$183,403**
5.5.1.2.3.8	Other Project Costs				
5.5.1.2.3.8.1	Environmental and Permitting	$32,942	$1,466	$13,763	$48,171
5.5.1.2.3.8.2	System Eng Support	$115,812	$5,154	$48,386	$169,352
5.5.1.2.3.8 Subtotal		**$148,754**	**$6,620**	**$62,149**	**$217,523**
Total Estimate		**$12,388,000**	**$552,000**	**$5,176,000**	**$18,115,000**

Figure A.2. Accelerated Tank Closure Demonstration Project Schedule (8 Sheets)

Activity ID	Activity Description	Orig Dur	Early Start	Early Finish
5 River Protection Project				
5.5 Close Facilities				
5.5.1 Close SST Farms & MUSTS				
5.5.1.2 SST Closure Demos				
5.5.1.2.3 Accelerated Tank Closure Demo Project				
5.5.1.2.3.0 Milestones				
00M01	Complete 30% Design (241-C-106)	0		31DEC02*
00M02	Complete 60% Design (241-C-106)	0		14FEB03*
00M03	Complete 90% Design (241-C-106)	0		31MAR03*
00M04	Complete Final Design (241-C-106)	0		30MAY03*
00M05	Complete 30% Design (241-C-200s)	0		30APR03*
00M06	Complete 60% Design (241-C-200s)	0		13JUN03*
00M07	Complete 90% Design (241-C-200s)	0		31JUL03*
00M08	Complete Final Design (241-C-200s)	0		30SEP03*
00M09	Complete 241-C-106 Waste Retrieval	0		30JAN04*
00M10	Complete 241-C-106 Closure	0		30MAR04*
00M11	Complete 241-C-200s Retrieval	0		02AUG04*
00M12	Complete 241-C-200s Closure	0		31DEC04*
00M13	Complete Grout Formulation/Testing	0		15MAY03*

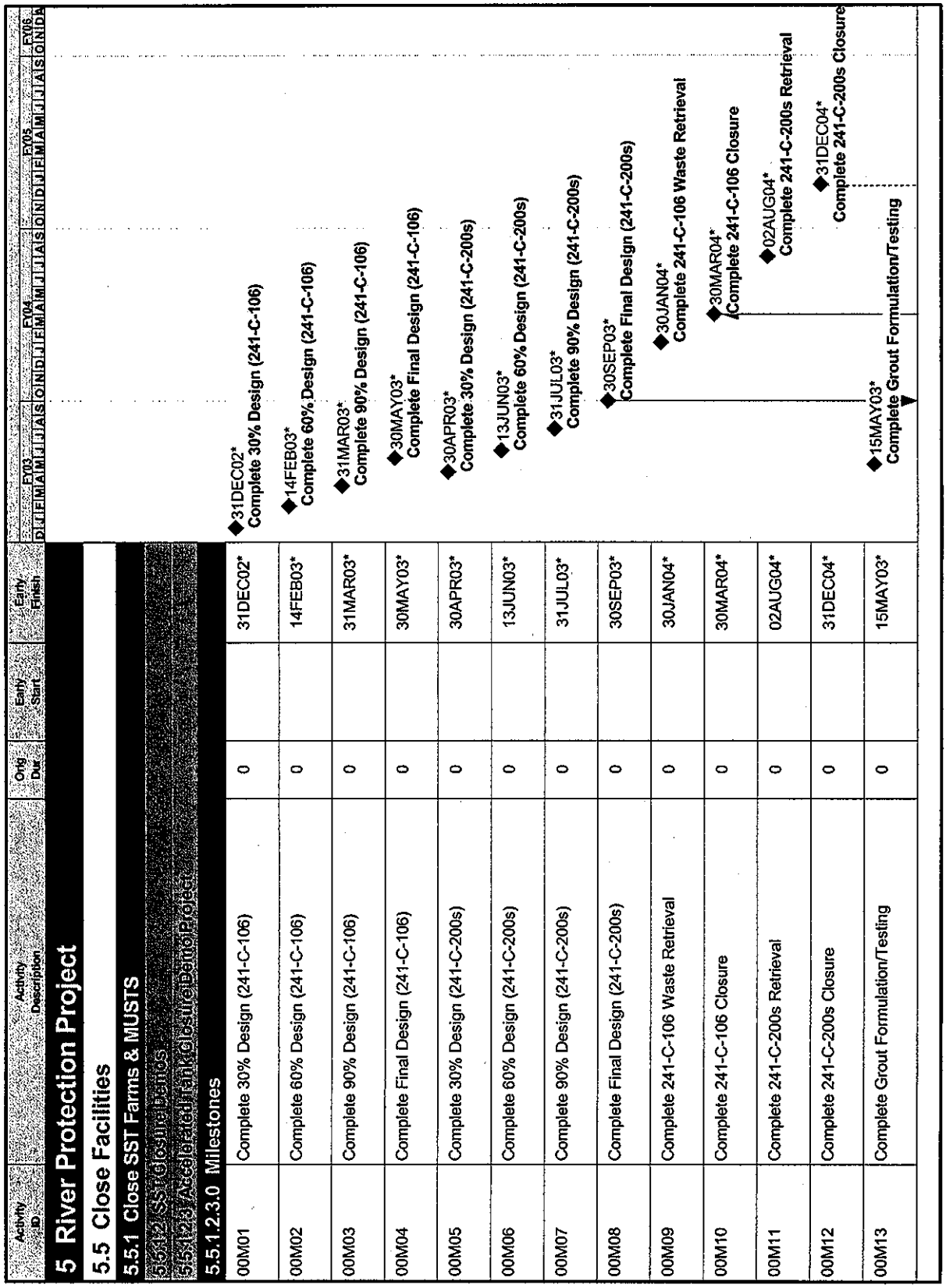

Sheet 1 of 8

Figure A.2. Accelerated Tank Closure Demonstration Project Schedule (8 Sheets)

Activity ID	Activity Description	Orig Dur	Early Start	Early Finish
5.5.1.2.3.5 Tank Closure (241-C-106)				
5.5.1.2.3.5.2 Procurement (241-C-106)				
5.5.1.2.3.5.2.1 Constructions Forces Contract (Site Improvement)				
52101	Site Improvement	62	01OCT03	31DEC03
5.5.1.2.3.5.2.2 Contract Grout Contractor				
52201	Draft SOW for Grout Contractor	20	19AUG03*	16SEP03
52202	Draft Acceptance/Evaluation Criteria	20	17SEP03	14OCT03
52203	Develop RFP	5	15OCT03	21OCT03
52204	Issue RFP	1	22OCT03	22OCT03
52205	RFP Response Period	10	23OCT03	05NOV03
52206	Receive and Review Proposals	5	06NOV03	12NOV03
52207	Issue Grout Contract	2	13NOV03	14NOV03
5.5.1.2.3.5.2.3 Monitoring Equipment				
52301	Monitoring Equipment	62*	01OCT03*	31DEC03
5.5.1.2.3.5.2.4 Ventilation System				
52401	Ventilation Systems	147*	02JUN03*	31DEC03
5.5.1.2.3.5.3 Construction (241-C-106)				
5.5.1.2.3.5.3.1 Construction Management				
53101	Construction Management	119	15OCT03	06APR04
5.5.1.2.3.5.3.2 Acceptance Inspection				
53201	Acceptance Inspection	119	15OCT03	06APR04

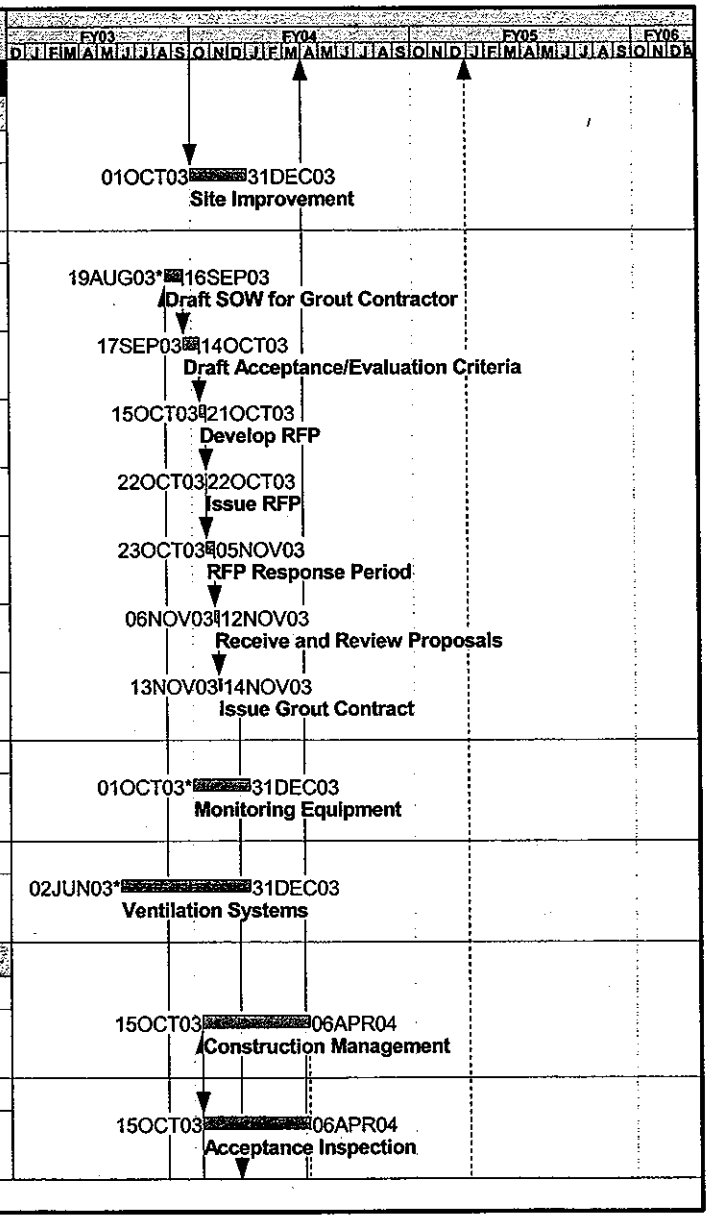

Sheet 2 of 8

Figure A.2. Accelerated Tank Closure Demonstration Project Schedule (8 Sheets)

Activity ID	Activity Description	Orig Dur	Early Start	Early Finish
5.5.1.2.3.5.3.3 Grout Delivery, Preparation, and Production				
53301	Mobilize to Site	25	17DEC03	23JAN04
53302	Site Access Training	2	26JAN04	27JAN04
53303	Setup/Test	10	28JAN04	10FEB04
53304	Produce Phase 1 Grout (Heel Stabilization)	5	11FEB04	18FEB04
53305	Produce Phase 2 Grout (Tank Fill)	7	23FEB04	02MAR04
53306	Produce Phase 2 Grout (Equip. Stabilization)	15	03MAR04	23MAR04
53307	Produce Phase 2 Grout (Riser Fill)	5	24MAR04	30MAR04
5.5.1.2.3.5.3.4 Site Preparation - Outside Farm				
53401	Remove/Relocate Equipment	10	15OCT03*	28OCT03
53402	Conduct Rad Survey	5	29OCT03	04NOV03
53403	Construct Temporary Fence	5	05NOV03	11NOV03
53404	Modify Tank Farm Fence	5	12NOV03	18NOV03
53405	Install Utilities	10	19NOV03	04DEC03
53406	Prep Grounds	10	05DEC03	18DEC03
5.5.1.2.3.5.3.5 Pre Grouting Tank Preparation				
53501	241-C-106 Ventilation	7	02FEB04*	10FEB04
53502	Prep In Tank Equipment Removal	15	12JAN04*	30JAN04

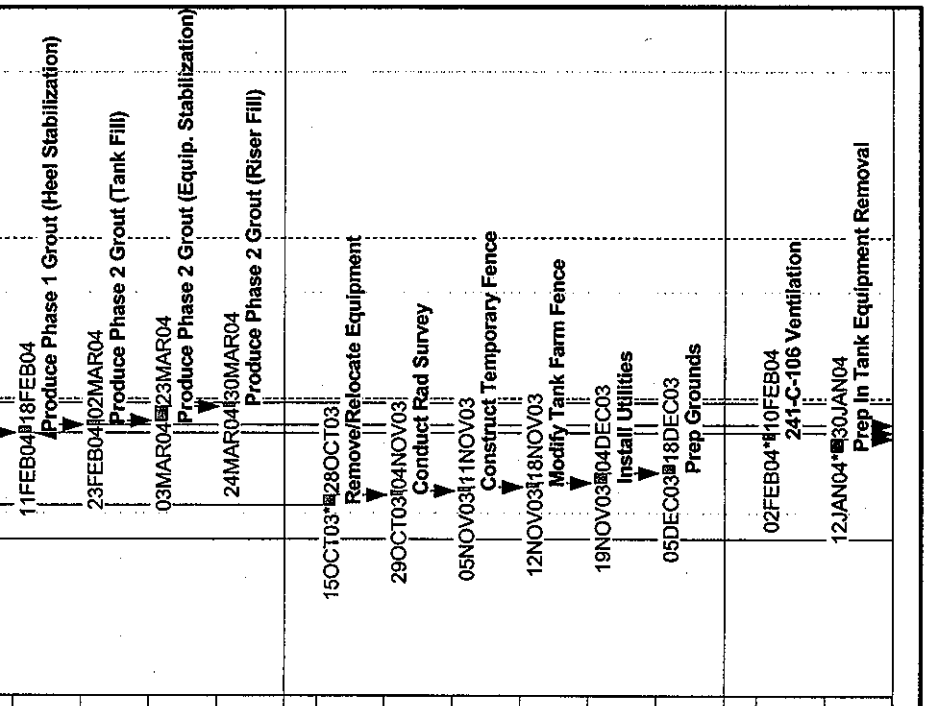

Sheet 3 of 8

Figure A.2. Accelerated Tank Closure Demonstration Project Schedule (8 Sheets)

Activity ID	Activity Description	Orig Dur	Early Start	Early Finish
5.5.1.2.3.5.3.5 Pre Grouting Tank Preparation				
53503	Disposition In Tank Equipment	5	02FEB04	06FEB04
53504	Install Pit Cover Plate (241-C-106)	2	09FEB04	10FEB04
53505	Instrumentation	2	09FEB04	10FEB04
53506	Isolation of Lines	7	02FEB04*	10FEB04
5.5.1.2.3.5.3.6 Engineering Support During Construction				
53601	Provide Engineering Support	126*	01OCT03*	01APR04
5.5.1.2.3.5.4 Tank Farm Operations Support (241-C-106)				
5.5.1.2.3.5.4.1 Ops Management and Planning Support				
54101	Operations Management and Planning Support	389*	01DEC03*	15JUN05
54102	Prepare Work Package - Site Prep	10	01OCT03*	14OCT03
54103	Prepare Work Package (241-C-106)	20	14JAN04*	10FEB04
5.5.1.2.3.5.4.2 Construction Support				
54201	Construction Support	127*	01DEC03*	01JUN04
5.5.1.2.3.5.4.3 Operations Training				
54301	Operations Training	21*	01DEC03*	31DEC03
5.5.1.2.3.5.4.4 Stabilize Heel (241-C-106)				
54401	Phase 1 Grouting - Stabilize Heel	5	11FEB04	18FEB04
54402	Video Surveill. - Heel Stabilization (241-C-106)	5	11FEB04	18FEB04
5.5.1.2.3.5.4.5 In-Tank Equipment Stabilization (241-C-106)				
54501	Phase 2 Grouting - Stabilize In Tank Equipment	15	03MAR04	23MAR04

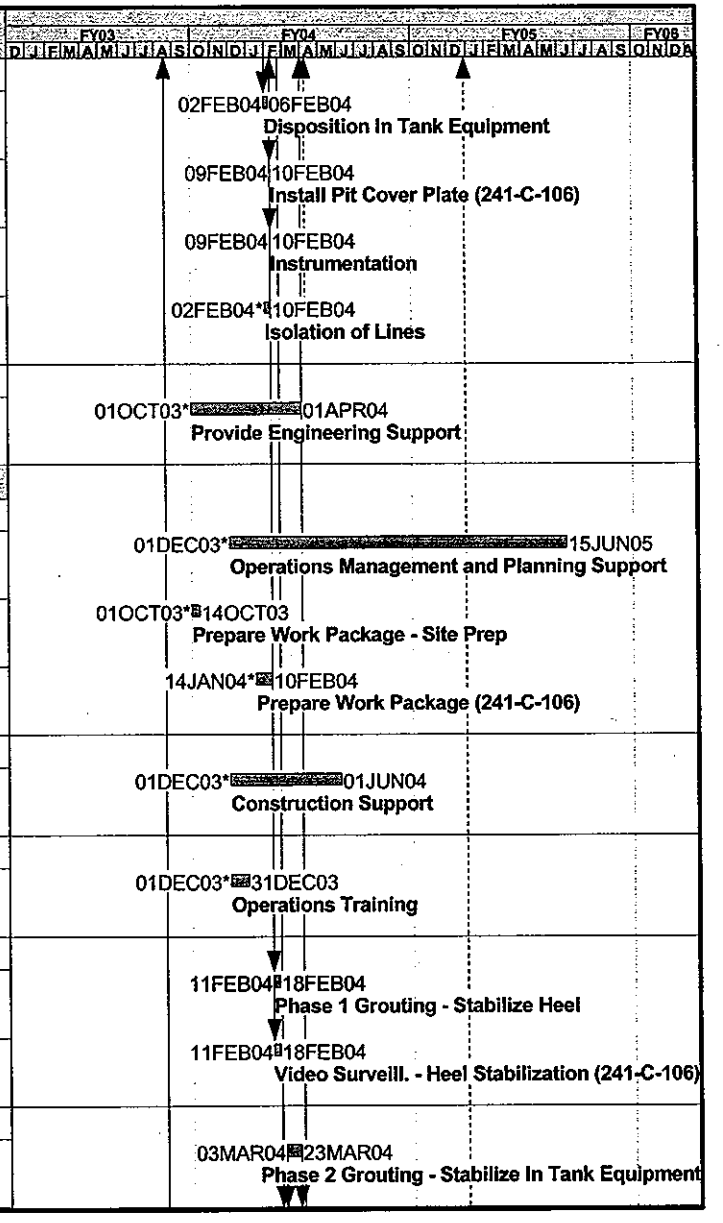

Sheet 4 of 8

Figure A.2. Accelerated Tank Closure Demonstration Project Schedule (8 Sheets)

Activity ID	Activity Description	Orig Dur	Early Start	Early Finish
5.5.1.2.3.5.4.5	**In-Tank Equipment Stabilization (241-C-106)**			
54502	Video Surveill. - Equip. Stabiliz. (241-C-106)	15	03MAR04	23MAR04
5.5.1.2.3.5.4.6	**Bulk Fill Tank (241-C-106)**			
54601	Phase 2 Grouting - Fill Tank	7	23FEB04	02MAR04
54602	Video Surveill. - Tank Fill (241-C-106)	7	23FEB04	02MAR04
5.5.1.2.3.5.4.7	**Tank Riser Fill/Stabilization (241-C-106)**			
54701	Phase 2 Grouting - Fill Equip/Risers	5	24MAR04	30MAR04
5.5.1.2.3.5.4.8	**Restore 241-C-106 and Demob From Farm**			
54801	Surface Restoration	5	31MAR04	06APR04
5.5.1.2.3.6	**Tank Closure (241-C-200s)**			
5.5.1.2.3.6.2	**Procurement (241-C-200s)**			
5.5.1.2.3.6.2.1	**Site Improvement**			
62101	Procure Construction Forces	10	16AUG04*	27AUG04
5.5.1.2.3.6.2.3	**Monitoring Equipment**			
62301	Monitoring Equipment	60	02JUL04*	27SEP04
5.5.1.2.3.6.2.4	**Pit Cover Plates**			
62401	Pit Cover Plates	60	02JUL04*	27SEP04
5.5.1.2.3.6.2.5	**Ventilation System**			
62501	Ventilation Systems	60	02JUL04*	27SEP04
5.5.1.2.3.6.3	**Construction (241-C-200s)**			
5.5.1.2.3.6.3.1	**Construction Management**			
63101	Construction Management	47	28SEP04	03DEC04

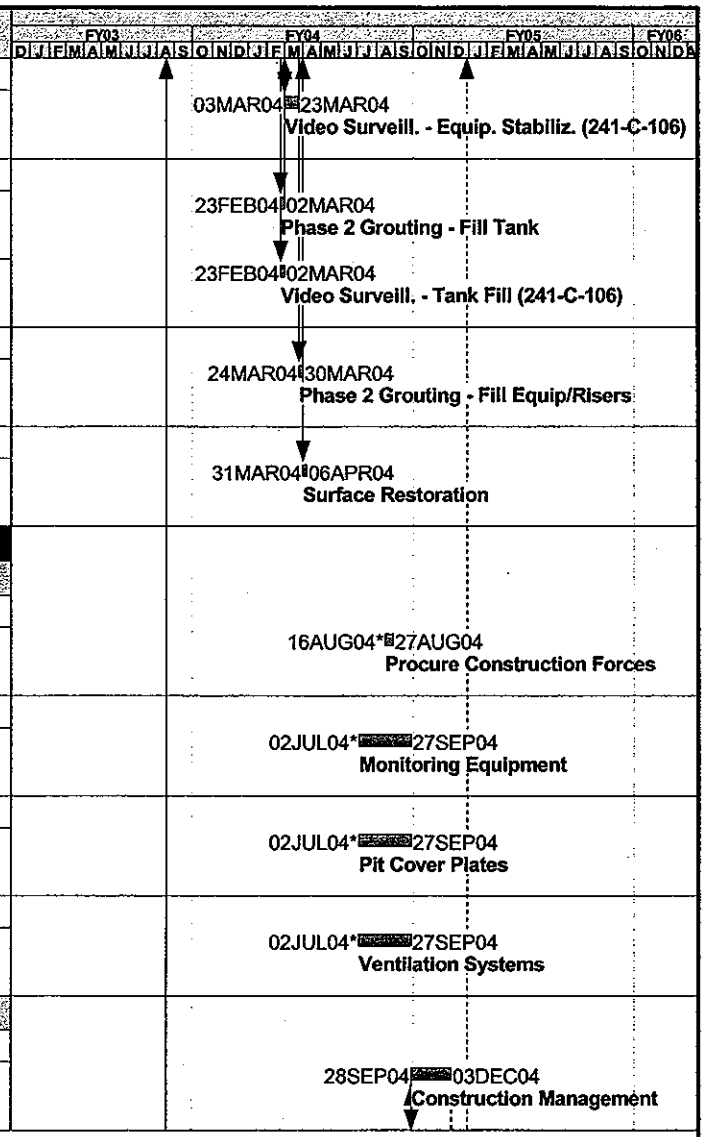

Sheet 5 of 8

Figure A.2. Accelerated Tank Closure Demonstration Project Schedule (8 Sheets)

Activity ID	Activity Description	Orig Dur	Early Start	Early Finish
5.5.1.2.3.6.3.2 Acceptance Inspection				
63201	Acceptance Inspection	47	28SEP04	03DEC04
5.5.1.2.3.6.3.3 Grout Delivery, Preparation, and Production				
63301	Produce Phase 1 Grout (Heel Stabilization)	5	19OCT04	25OCT04
63302	Produce Phase 2 Grout (Tank Fill)	5	26OCT04	01NOV04
63303	Produce Phase 2 Grout (Equip. Stabilization)	15	02NOV04	22NOV04
63304	Produce Phase 2 Grout (Riser Fill)	5	23NOV04	01DEC04
5.5.1.2.3.6.3.4 Pre Grouting Tank Preparation				
63401	Ventilation System (241-C-200s)	10	28SEP04*	11OCT04
63402	Install Pit Cover Plate (241-C-200s)	10	05OCT04	18OCT04
63403	Instrumentation (241-C-200s)	10	28SEP04	11OCT04
63404	Prep In-Tank Equipment Removal	15	16AUG04*	03SEP04
63405	Disposition Equipment in Risers (241-C-200s)	20	07SEP04	04OCT04
5.5.1.2.3.6.3.5 Engineering Support During Construction				
63501	Engineering Support During Construction	119*	01JUL04*	20DEC04
5.5.1.2.3.6.4 Tank Farm Operations Support (241-C-200s)				
5.5.1.2.3.6.4.1 Ops Management and Planning Support				
64102	Prepare Work Package - Site Prep	10	23AUG04*	03SEP04
64103	Prepare Work Package (241-C-200s)	10	05OCT04*	18OCT04

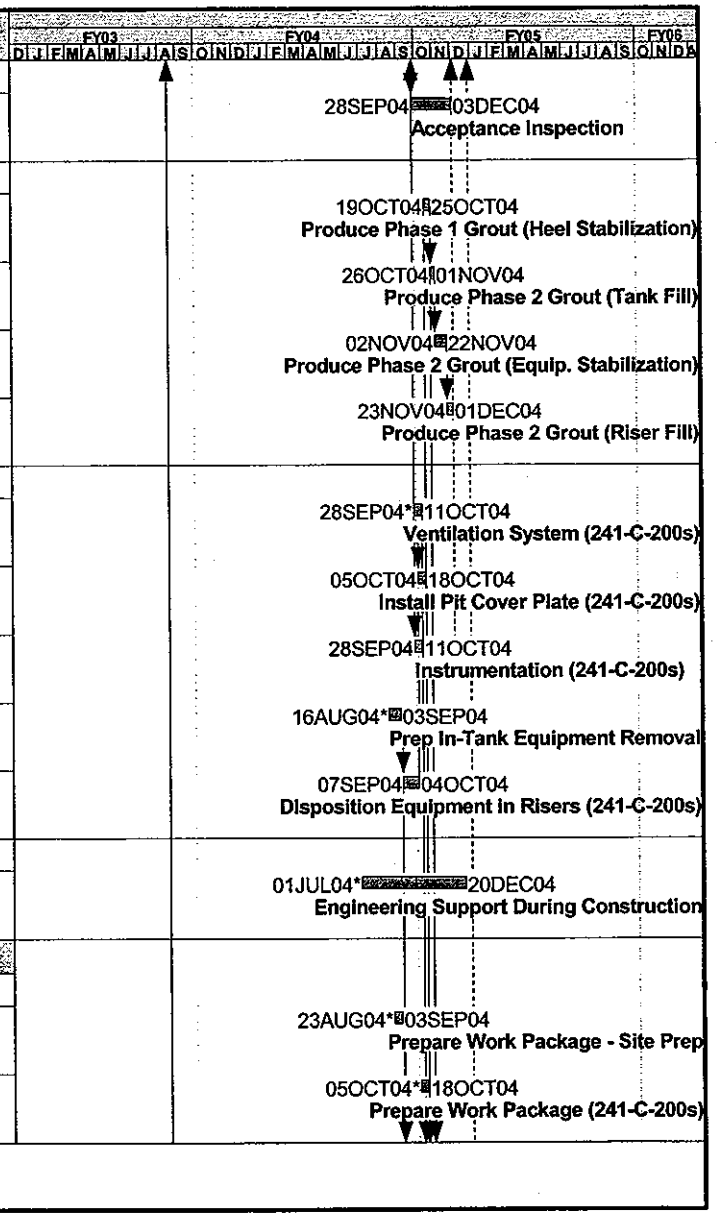

Sheet 6 of 8

Figure A.2. Accelerated Tank Closure Demonstration Project Schedule (8 Sheets)

Activity ID	Activity Description	Orig Dur	Early Start	Early Finish
5.5.1.2.3.6.4.2 Construction Support				
64201	Construction Support	25	07SEP04	11OCT04
5.5.1.2.3.6.4.4 Stabilize Heel (241-C-200s)				
64401	Phase 1 Grouting - Stabilize Heel	5	19OCT04	25OCT04
64402	Video Surveill. - Heel Stabilization (241-C-200s	5	19OCT04	25OCT04
5.5.1.2.3.6.4.5 In-Tank Equip. Stabilization (241-C-200s)				
64501	Phase 2 Grouting - Stabilize In Tank Equipment	12	02NOV04	17NOV04
64502	Video Surveill. - Equip Stabiliz. (241-C-200s)	12	02NOV04	17NOV04
5.5.1.2.3.6.4.6 Bulk Fill Tank (241-C-200s)				
64601	Phase 2 Grouting - Fill Tank	5	26OCT04	01NOV04
64602	Video Surveill. - Tank Fill (241-C-200s)	5	26OCT04	01NOV04
5.5.1.2.3.6.4.7 Tank Riser Fill/Stabilization (241-C-200s)				
64701	Phase 2 Grouting - Fill Equip/Riser	5	18NOV04	24NOV04
5.5.1.2.3.6.4.8 Restore 241-C-200s and Demob From Farm				
64801	Surface Restoration (241-C-200s)	5	29NOV04	03DEC04
5.5.1.2.3.7 ATCD Closeout				
5.5.1.2.3.7.1 Final As Built Drawings				
7101	Final As Built	120	04JAN05*	22JUN05
5.5.1.2.3.7.2 Modify Relevent Documents				
7201	Document Modification	120	04JAN05*	22JUN05

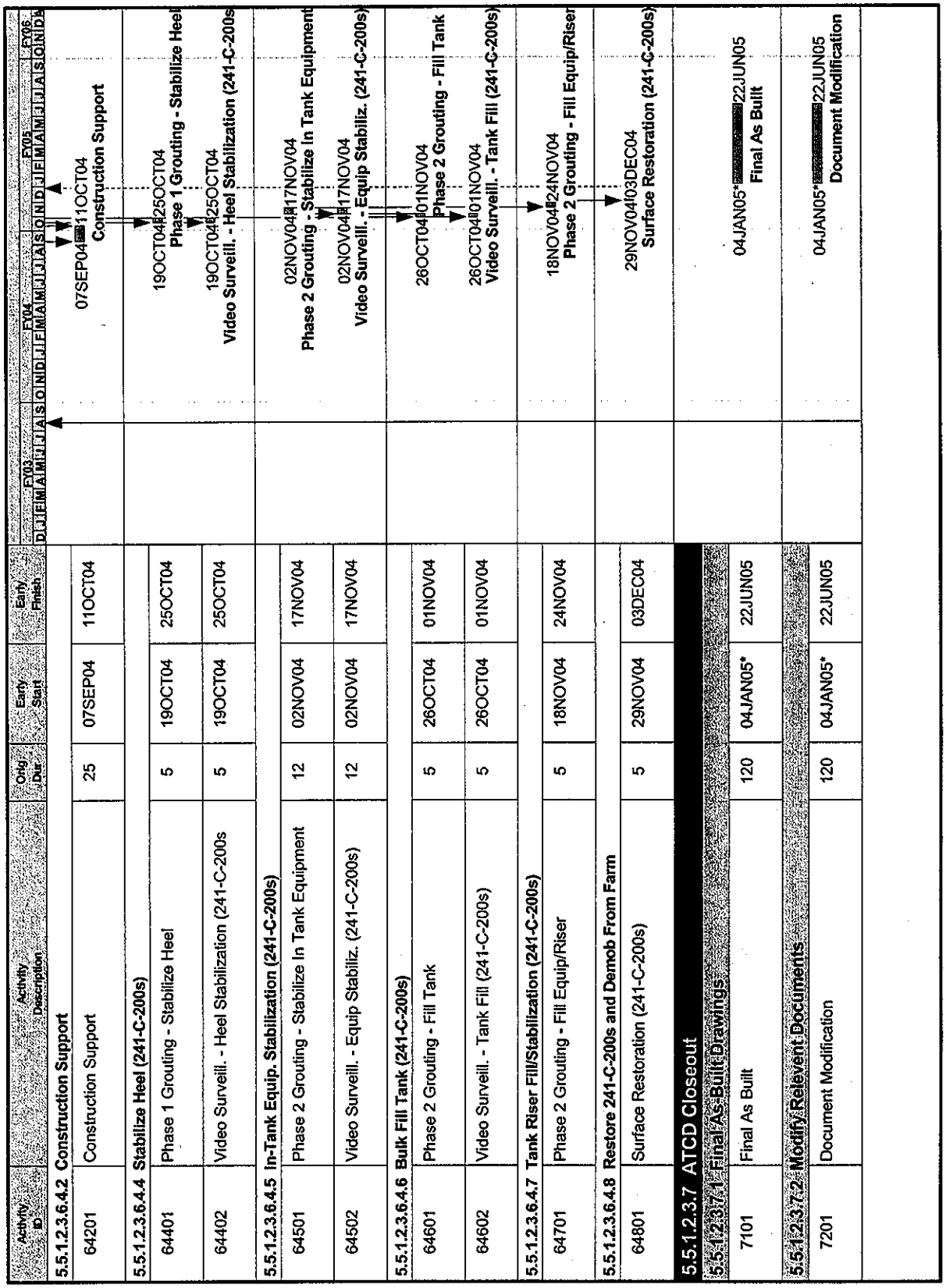

Sheet 7 of 8

Figure A.2. Accelerated Tank Closure Demonstration Project Schedule (8 Sheets)

Activity ID	Activity Description	Orig Dur	Early Start	Early Finish
5.5.1.2.3.7.3 Lessons Learned				
7301	Lessons Learned	120	04JAN05*	22JUN05
5.5.1.2.3.8 Other Project Costs				
5.5.1.2.3.8.1 Environmental and Permitting				
8101	Prepare Draft Notice of Construction (NOC)	60	28FEB03*	22MAY03
8102	CHG Review NOC	10	23MAY03	06JUN03
8103	DOE/DOH Review/Approve NOC	30	09JUN03	21JUL03
5.5.1.2.3.8.2 Plant Engineering Support				
8201	Plant Engineering Support	285*	15OCT03*	01DEC04

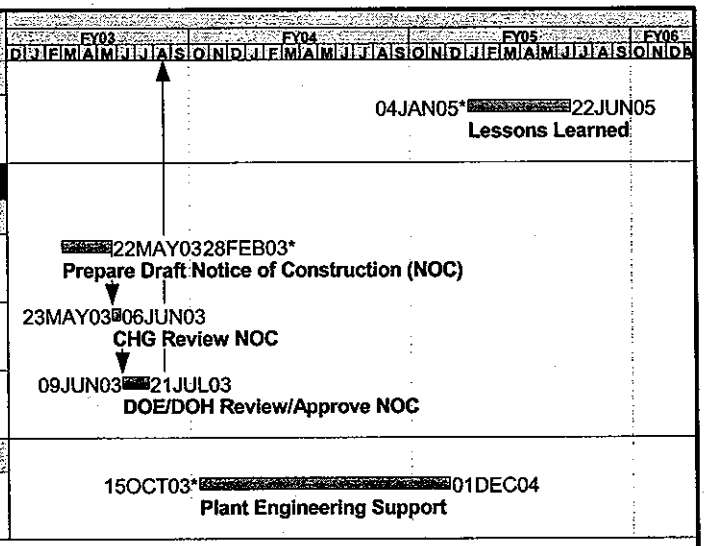

Sheet 8 of 8

COST ESTIMATING INPUT SHEETS

Cost Estimating Input Sheet

Page 1 of 1

WBS#	5.5.1.2.3.5.2.1	WBS Title:	Site Improvement		
Prepare LE Ulbricht		Rev #	0	Date:	9/12/02

Scope Description:

Procurement of construction forces service for Site Preparation - Outside Farm, WBS 5.5.1.2.3.5.3.4 and Pre Grouting Tank Preparation, WBS 5.5.1.2.3.5.3.5

Estimating Assumptions & Exclusions :

Basis of Estimate:

Standard 3% procurement costs for implementing a construction forces service contract

Contingency: Level of Confidence/Risks Identification

Contingency is addressed at the summary estimate level for all tank closure activities.

Estimating notes:(including indentification of environmental/productivity factors):

1. Site Preparation - Outside Farm, WBS 5.5.1.2.3.5.3.4
2. Pre Grouting Tank Preparation, WBS 5.5.1.2.3.5.3.5

6.0 Resource Requirements:

Act. #	Activity Description	Res Code	Res Type	FY	Note #	Bud.Qty	BQ Rate	Factors	$
52101	Site Improvement	LP00E	CHG Professic	2004	1	122.2	1,000	3%	$3,666
		LP00E	CHG Professic	2004	2	937.1	1,000	3%	$28,113
									$0
									$0
									$0
									$0
									$0
									$0
									$0
									$0
									$0
									$0
									$0
									$0
									$0
									$0
									$0
									$0
									$0
									$0
									$0
									$0
								WBS Estimate Total	$31,779

9/12/2002 - 11:47 AM

Site Improvement (5.5.1.2.3.5.2.1) / CEISTemplate

Cost Estimating Input Sheet

WBS#	5.5.1.2.3.5.2.2	WBS Title:	Grout Contractor		
Prepare	LE Ulbricht	Rev #	0	Date:	9/12/02

Scope Description:

Procure services from grout production vendor

Estimating Assumptions & Exclusions :

Includes effort for 5.5.1.2.3.6.2.2

Basis of Estimate:

Engineering judgment

Contingency: Level of Confidence/Risks Identification

Contingency is addressed at the summary estimate level for all tank closure activities.

Estimating notes:(including identification of environmental/productivity factors):

6.0 Resource Requirements:

Act. #	Activity Description	Res Code	Res Type	FY	Note #	Bud Qty	BQ Rate	Factors	$
52201	Draft SOW for Grout Contractor	LE13E	engineer	2003		160	64.34	0%	$10,294
		LP00E	Professional	2003		16	47.30	0%	$757
52202	Draft Acceptance/Evaluation Criteria	LE13E	engineer	2003		120	64.34	0%	$7,721
		LP00E	Professional	2003		16	47.30	0%	$757
52203	Develop RFP	LP00E	Professional	2004		16	47.30	0%	$757
52204	Issue RFP								$0
52205	RFP Response Period								$0
52206	Receive and Review Proposals	LE13E	engineer	2004		120	64.34	0%	$7,721
		LM02E	mgmt	2004		40	76.14	0%	$3,046
		LP00E	Professional	2004		16	47.30	0%	$757
52207	Issue Grout Contract	LP00E	Professional	2004		16	47.30	0%	$757
									$0
									$0
									$0
									$0
									$0
									$0
									$0
							WBS Estimate Total		32,566

9/12/2002 - 11:50 AM

Grout Contractor (5.5.1.2.3.5.2.2) / CEISTemplate

Cost Estimating Input Sheet

WBS#	5.5.1.2.3.5.2.3	WBS Title:	Monitoring Equipment		
Prepare	LE Ulbricht	Rev.#	0	Date:	9/12/02

Scope Description:

Procurement of in-tank video camera

Estimating Assumptions & Exclusions :

Basis of Estimate:

241-S-112 CEIS for in-tank video procurement

Contingency: Level of Confidence/Risks Identification

Contingency is addressed at the summary estimate level for all tank closure activities.

Estimating notes:(including identification of environmental/productivity factors):

6.0 Resource Requirements:

Act. #	Activity Description	Res Code	Res Type	FY	Note #	Bud.Qty	BQ Rate	Factors	$
52301	Monitoring Equipment	21L	camera	2004		35.5	1000.00	0%	$35,500
		21L	sales tax	2004		35.5	1000.00	8.3%	$2,947
		21L	procurement	2004		35.5	1000.00	3%	$1,065
		21L	warehouse	2004		35.5	1000.00	10%	$3,550
									$0
									$0
									$0
									$0
									$0
									$0
									$0
									$0
									$0
									$0
									$0
									$0
									$0
									$0
									$0
									$0
								WBS Estimate Total	43,062

9/12/2002 - 2:12 PM

Monitoring Equipment (5.5.1.2.3.5.2.3) / CEISTemplate

Cost Estimating Input Sheet

WBS#	5.5.1.2.3.5.2.4	WBS Title:	Ventilation System		
Prepare	LE Ulbricht	Rev #	0	Date:	9/12/02

Scope Description:

Procurement of a 500 scfm portable exhauster with inlet filter assembly, stack monitor, and instrumentation controls.

Estimating Assumptions & Exclusions :

Basis of Estimate:

costs for 241-S-102 ventilation skid

Contingency: Level of Confidence/Risks Identification

Contingency is addressed at the summary estimate level for all tank closure activities.

Estimating notes:(including identification of environmental/productivity factors):

6.0 Resource Requirements:

Act. #	Activity Description	Res Code	Res Type	FY	Note #	Bud.Qty	BQ Rate	Factors	$
52601	Ventilation Systems	21L	Port. Exhaust	2004		1750	1000.00	0%	1,750,000
		21L	inlet filter	2004		25	1000.00	0%	25,000
		21L	stack monitor	2004		50	1000.00	0%	50,000
		21L	sales tax	2004		1775	1000.00	8.3%	147,325
		21L	procurement	2004		1775	1000.00	3%	53,250
		21L	warehouse	2004		1775	1000.00	10%	177,500
									0
									0
									0
									0
									0
									0
									0
									0
									0
									0
									0
									0
									0
									0
									0
						WBS Estimate Total			2,203,075

9/12/2002 - 2:12 PM

Ventilation System (5.5.1.2.3.5.2.4) / CEISTemplate

Cost Estimating Input Sheet

Page 1 of 1

WBS#	5.5.1.2.3.5.2.5	WBS Title:	Miscellaneous Equipment		
Prepare	C Henderson	Rev #	0	Date:	9/12/02

Scope Description:

Procurement of miscellaneous equipment to support tank fill.

Estimating Assumptions & Exclusions :

Basis of Estimate:

Engineering judgment.

Contingency: Level of Confidence/Risks Identification

Contingency is addressed at the summary estimate level for all tank closure activities.

Estimating notes:(including identification of environmental/productivity factors):

1. Portable grout mixing equipment for mixing small volumes of material required to support riser fill and equipment stabilization.
2. Miscellaneous equipment allowance for grout hose, small tremie lines, chutes, and other equipment that may be necessary to fill risers and equipment.

6.0 Resource Requirements:

Act.#	Activity Description	Res Code	Res Type	FY	Note #	Bud.Qty	BQ Rate	Factors	$
	portable grout mixer	21L	equipment	2004	1	8	1000.00	0%	8,000
	misc grouting equipment	21L	equipment	2004	2	10	1000.00	0%	10,000
		21L	sales tax	2004		18	1000.00	8.3%	1,494
		21L	procurement	2004		18	1000.00	3%	540
		21L	warehouse	2004		18	1000.00	10%	1,800
									0
									0
									0
									0
									0
									0
									0
									0
									0
									0
									0
									0
									0
									0
								WBS Estimate Total	21,834

9/12/2002 - 11:55 AM

Miscellaneous Equip (5.5.1.2.3.5.2.5) / CEISTemplate

Cost Estimating Input Sheet

Page 1 of 1

WBS#	5.5.1.2.3.5.3.1	WBS Title:	Construction Management
Prepare	LE Ulbricht	Rev #	0
Date:	8/22/02		

Scope Description:

Management of construction forces service for Site Preparation - Outside Farm, WBS 5.5.1.2.3.5.3.4 and Pre Grouting Tank Preparation, WBS 5.5.1.2.3.5.3.5

Estimating Assumptions & Exclusions :

Construction management of grout vendor activities is not required

Basis of Estimate:

Standard 20% construction management costs for implementing a construction forces service contract

Contingency: Level of Confidence/Risks Identification

Contingency is addressed at the summary estimate level for all tank closure activities.

Estimating notes:(including identification of environmental/productivity factors):

1. Site Preparation - Outside Farm, WBS 5.5.1.2.3.5.3.4
2. *Pre Grouting Tank Preparation*, WBS 5.5.1.2.3.5.3.5

6.0 Resource Requirements:

Act. #	Activity Description	Res Code	Res Type	FY	Note #	Bud.Qty	BQ Rate	Factors	$
53101	Construction Management	21L	CF services	2004	1	122.2	1,000	20%	$24,440
		21L	CF services	2004	2	937.1	1,000	20%	187,418
									$0
									$0
									$0
									$0
									$0
									$0
									$0
									$0
									$0
									$0
									$0
									$0
									$0
									$0
									$0
									$0
									$0
									$0
									$0
								WBS Estimate Total	211,858

9/12/2002 - 11:58 AM

Construction Management (5.5.1.2.3.5.3.1) / CEISTemplate

Cost Estimating Input Sheet

WBS#	5.5.1.2.3.5.3.2	WBS Title:	Acceptance Inspection		
Prepare	LE Ulbricht	Rev #	0	Date:	9/12/02

Scope Description:

Acceptance inspection of construction forces service for Site Preparation - Outside Farm, WBS 5.5.1.2.3.5.3.4 and Pre Grouting Tank Preparation, WBS 5.5.1.2.3.5.3.5

Estimating Assumptions & Exclusions :

Acceptance inspection of grout vendor is not required. Quality control of grout production is accomplished through the approved vendor's QA program with oversight by Hanford Site QA.

Basis of Estimate:

Standard 10% acceptance inspection costs for a construction forces service contract

Contingency: Level of Confidence/Risks Identification

Contingency is addressed at the summary estimate level for all tank closure activities.

Estimating notes:(including identification of environmental/productivity factors):

1. Site Preparation - Outside Farm, WBS 5.5.1.2.3.5.3.4
2. Pre Grouting Tank Preparation, WBS 5.5.1.2.3.5.3.5

6.0 Resource Requirements:

Act. #	Activity Description	Res Code	Res Type	FY	Note #	Bud.Qty	BQ Rate	Factors	$
53201	Acceptance inspection	21L	CF services	2004	1	122.2	1,000	10%	$12,220
		21L	CF services	2004	2	937.1	1,000	10%	$93,709
									$0
									$0
									$0
									$0
									$0
									$0
									$0
									$0
									$0
									$0
									$0
									$0
									$0
									$0
									$0
									$0
									$0
									$0
								WBS Estimate Total	105,929

9/12/2002 - 12:00 PM

Acceptance Inspection (5.5.1.2.3.5.3.2) / CEISTemplate

Cost Estimating Input Sheet

WBS#	5.5.1.2.3.5.3.3	WBS Title:	Grout Delivery, Preparation, and Production			
Prepare	LE Ulbricht		Rev #:	0	Date:	9/12/02

Scope Description:

Vendor provided services including mobilization, grout production, and delivery of grout to tank

Estimating Assumptions & Exclusions :

The grout vendor is contracted to provide services throughout the operating period and does not enter the radiologically controlled area. Extension of the operating period due to weather delays is included in the contingency.

Basis of Estimate:

ROM estimate from potential vendor

Contingency: Level of Confidence/Risks Identification

Contingency is addressed at the summary estimate level for all tank closure activities.

Estimating notes:(including identification of environmental/productivity factors):

1. The ROM estimate cost breakdown from the grout vendor is provided as back in this Appendix (Appendix A of the Basis of Design Report); the total cost is presented here.

6.0 Resource Requirements:

Act. #	Activity Description	Res Code	Res Type	FY	Note #	Bud.Qty	BQ Rate	Factors	$
53301	mobilize to site				1				$0
53302	site access training				1				$0
53303	setup/test				1				$0
53304	produce heel stabilization grout				1				$0
53305	produce tank fill grout				1				$0
53306	produce equip stab/riser fill grout				1				$0
					1	866.1	1000.00		866,100
									$0
									$0
									$0
									$0
									$0
									$0
									$0
									$0
									$0
									$0
									$0
									$0
									$0
									$0
						WBS Estimate Total			866100

9/12/2002 - 12:03 PM

Grout Delivery, Preparation, and Production (5.5.1.2.3.5.3.3) / CEISTemplate

Cost Estimating Input Sheet

Page 1 of 1

WBS#	5.5.1.2.3.5.3.4	WBS Title:	Site Preparation - Outside Farm		
Prepared By: LE Ulbricht			Rev #	0	Date: 9/12/02

Scope Description:

Preparation of site for bulk material storage, erect construction fence, provide raw water with heat trace utilities, provide power and phone line to construction trailer

Estimating Assumptions & Exclusions :

The construction trailer is provided by the grout production vendor. The construction trailer site setup is provided by the grout production vendor.

Basis of Estimate:

Engineering judgment with S-112 CEIS and W-520 as input. Assumes contract for construction forces services.
A factor of 50% is applied for SWP work and a factor of 30% is applied to delays in field activities caused by inclement weather (factor = 1.5*1.3 = 1.95)

Contingency: Level of Confidence/Risks Identification

Contingency is addressed at the summary estimate level for all tank closure activities.

Estimating notes:(including identification of environmental/productivity factors):

1. Based on 8 hr of crane crew at $627/hr from 241-S-112 estimate with a 30% factor for weather
2. From W-520, cost for installing raw water line is $65/ft and $30/ft for electrical. Assumes cost to install air is equal to that of raw water and all installed lengths are 300 feet. ($65 + $65 + $30) * 300' = $48,000; rounded to $50,000.
3. The estimate assumes 3 man weeks of earth movers to scrape the ground for vegetation removal with the following factors: weather (30%), foreman (8%), consumables (4%), general conditions (20%), and government equipment surcharge (5%). (120hr * $56/hr * 184% = $12,100)
4. From W 520, fence cost is $20/ft. Assume 500 ft. ($20/ft * 500' = $10,000)
5. Modification of RCA fence to allow grout slickline to cross boundary. Assumes 80 hours at $38.86/hr from CF services with HPT and farm operator required due to modification of the RCA fence.
6. Budget quantity is sum of 21L total costs for activities of notes 1 - 5.

6.0 Resource Requirements:

Act. #	Activity Description	Res Code	Res Type	FY	Note #	Bud.Qty	BQ Rate	Factors	$
53401	Remove/Relocate Equipment	21L	crane crew	2004	1	5.1	1000.00	130%	$6,630
		LR05B	operator	2004		8.0	44.76	130%	$466
53402	Conduct Rad Survey	LT05B	HPT	2004		8.0	41.86	130%	$435
53403	Construct Temporary Fence	21L	CF services	2004	4	10.0	1000.00	130%	$13,000
53404	Modify Tank Farm Fence	21L	CF services	2004	5	3.1	1000.00	195%	$6,045
		LT05B	HPT	2004	5	24.0	41.86	195%	$1,959
		LR05B	operator	2004	5	40.0	44.76	195%	$3,491
									$0
53405		21L	utilities	2004	2	50.0	1000.00	0%	$50,000
53406		21L	grounds clear	2004	3	12.1	1000.00	0%	$12,100
		21L	general condit	2004	6	87.8	1000.00	20.0%	$17,555
		21L	consumables	2004	6	87.8	1000.00	4.0%	$3,511
		21L	foreman	2004	6	87.8	1000.00	8.0%	$7,022
	TOTAL OF 21L ACTIVITIES								115,863
									$0
									$0
									$0
									$0
							WBS Estimate Total		122,214

9/12/2002 - 2:55 PM

Site Preparation - Outside Farm (5.5.1.2.3.5.3.4) / CEISTemplate

Cost Estimating Input Sheet

WBS#	5.5.1.2.3.5.3.5	WBS Title:	Pre Grouting Tank Preparation		
Prepare LE Ulbricht		Rev #	0	Date:	9/12/02

Scope Description:

Remove existing portable exhauster and install 500 scfm exhauster, install duct from portable exhauster to heel pit, install high flow filter on heel pit, install in-tank camera, isolate the cascade line, and remove Articulated Mast System from the heel pit.

Estimating Assumptions & Exclusions :

Supporting detail for the AMS removal is on page 2 of this CEIS.

Basis of Estimate:

Estimate assumes work is contracted to construction forces. Engineering judgment coupled with other project cost estimates.
A factor of 50% is applied for SWP work and a factor of 30% is applied to delays in field activities caused by inclement weather (factor = 1.5*1.3 = 1.95)

Contingency: Level of Confidence/Risks Identification:

Contingency is addressed at the summary estimate level for all tank closure activities.

Estimating notes:(including identification of environmental/productivity factors):

1. Based on 241-C-103 installation and test of exhauster for 52.1K. Includes $28,000 for heel pit cover modification for installation of new duct and filter; based on 241-U-111 pit cover plate mod.
2. Based on 241-S-103 estimate.
3. not required, exist cover plate will be modified as in Activity 3501
4. Based on 241-S-103 estimate of 20K for non-pit riser entry
5. Per 241-S-103 trenching and laying hose in hose waste transfer line cost is $40/ft. Estimate uses 500 feet of pipe at $30/ft, subtracting $10/ft because no trenching or shielding required.
6. Projected from 241-S-103 estimates for pit & riser entries of $25,000.
7. Budget quantity is sum of 21L total costs for activities 53501 through 53504.
8. See CEIS sheet 2 for detail

All estimates include support from operations and HPT personnel.

6.0 Resource Requirements:

Act. #	Activity Description	Res Code	Res Type	FY	Note #	Bud.Qty	BQ Rate	Factors	$
53501	241-C-106 ventilation	21L	remove/install	2004	1	80.1	1000	195%	156,195
		21L	modify cover plate		1	30.0	1000	195%	58,500
		21L	install duct	2004	2	50.0	1000	195%	$97,500
		21L	install inlet filt	2004	6	35.0	1000	195%	$68,250
53503	remove AMS from heel pit	21L	equip removal	2004	8	219.6	1000	0%	$219,562
53504	install pit cover plate	21L			3				$0
53505	instrumentation	21L	install camera	2004	2	25	1000	195%	$48,750
53506	isolation of lines	21L	cascade line	2004	4	20.0	1000	195%	$39,000
		21L	general condit	2004	7	687.8	1000	20.0%	$137,551
		21L	consumables	2004	7	687.8	1000	4.0%	$27,510
		21L	foreman	2004	7	687.8	1000	8.0%	$55,021
	TOTAL OF 21L ACTIVITIES								907,839
	install grout slickline in farm			2004	5	30.0	500	195.0%	$29,250
									$0
									$0
									$0
									$0
									$0
						WBS Estimate Total			937,089

9/12/2002 - 2:14 PM

Pre Grouting Tank Preparation (5.5.1.2.3.5.3.5) / CEIS-page 1

Cost Estimating Input Sheet

WBS#	5.5.1.2.3.5.3.5	WBS Title:	Pre Grouting Tank Preparation		
Prepare	C Henderson	Rev.#	0	Date:	9/11/02

Scope Description:

This activity involves removal of the Articulated Mast System from a pump pit.

Estimating Assumptions & Exclusions :

This estimate is a placeholder for dispositioning the AMS. Removal and disposal was assumed for the Basis of Design report as the more conservative approach to dispositioning the AMS. During detail design alternatives for in-place disposal will be evaluated. It is assumed that the cold test facility and mockups developed for the waste retrieval effort would be utilized for planning the removal step. It is assumed that the AMS will be pulled using a crane, sleeved and bagged with plastic, cut up and placed in burial boxes for disposal.

Engineering judgment coupled with other project cost estimates.
A factor of 50% is applied for SWP work and a factor of 30% is applied to delays in field activities caused by inclement weather (factor = 1.5*1.3 = 1.95)

Contingency: Level of Confidence/Risks Identification

Contingency is addressed at the summary estimate level for all tank closure activities.

Estimating notes:(including identification of environmental/productivity factors):

1. 1 field work supervisor for 10 days (8 days preparation and 2 days execution)
2. 4 pipe fitters for 5 days (3 days planning/prep and 2 days execution)
3. 2 electricians for 5 days (3 days planning and 2 days execution)
4. 5 operators for 5 days (3 days planning/prep and 2 days execution)
5. 1 IH tech for 5 days
6. 2 HPTs for 5 days
7. Crane crew for 3 days - composite rate of $6,500 per day (crew plus crane) taken from S-112 waste retrieval cost estimate.
8. Two 4x4x8 burial boxes at $13,800 each
9. Storage fee for low level mixed waste at $113.87/cubic foot or $14,600/box
10. Radiological engineer for 3 weeks to support equipment removal.

6.0 Resource Requirements:

Act. #	Activity Description	Res Code	Res Type	FY	Note #	Bud.Qty	BQ Rate	Factors	$
53502	Disposition In Tank Equipment	LM02E	Field Supv	2004	1	80.0	76.14	195%	11,878
53503	Disposition In Tank Equipment	LC08B	Pipe Fitter	2004	2	160.0	41.78	195%	13,035
53503	Disposition In Tank Equipment	LC02B	Electricians	2004	3	80.0	44.36	195%	6,920
53503	Disposition In Tank Equipment	LR05B	Operators	2004	4	200.0	44.76	195%	17,456
53503	Disposition In Tank Equipment	LT06B	IH Tech	2004	5	40.0	42.70	195%	3,331
53503	Disposition In Tank Equipment	LT05B	HPT	2004	6	80	41.86	195%	6,530
53503	Disposition In Tank Equipment	LE008E	Rad Eng	2004	10	120	66.61	195%	15,587
53503	Disposition In Tank Equipment	21L	Crane crew	2004	7	19.5	1000.00	195%	38,025
53503	Disposition In Tank Equipment	10L	Burial boxes	2004	8	27.6	1000.00	0.0%	$27,600
53503	Disposition In Tank Equipment	54L	Disposal	2004	9	29.2	1000.00	0.0%	$29,200
53503	Disposition In Tank Equipment	10L	Misc	2004	11	50.0	1000.00	0.0%	$50,000
								WBS Estimate Total	219,562

9/12/2002 - 12:16 PM

Pre Grouting Tank Preparation (5.5.1.2.3.5.3.5) / CBS-page 2

Cost Estimating Input Sheet

WBS#	5.5.1.2.3.5.3.6	WBS Title:	Engineering Support During Construction			
Prepare	LE Ulbricht		Rev #	0	Date:	9/12/02

Scope Description:

Provide engineering support to the field during construction activities.

Estimating Assumptions & Exclusions :

Basis of Estimate:

Engineering judgment

Contingency: Level of Confidence/Risks Identification

Contingency is addressed at the summary estimate level for all tank closure activities.

Estimating notes:(including identification of environmental/productivity factors):

1. Provide full time field engineer support with support from engineering office for preparation of ECNs, construction interface, and vendor interface. The support from the engineering office is assumed to be equivalent to one engineer working full time. Construction period assumed to be from 10/01/03 to 4/01/04

6.0 Resource Requirements:

Act. #	Activity Description	Res Code	Res Type	FY	Note #	Bud.Qty	BQ Rate	Factors	$
53601	Provide Engineering Support	LE13E	Engineer	2004	1	2080	64.34	0%	133,827
									$0
									$0
									$0
									$0
									$0
									$0
									$0
									$0
									$0
									$0
									$0
									$0
									$0
									$0
									$0
									$0
									$0
									$0
									$0
								WBS Estimate Total	133,827

9/12/2002 - 12:12 PM

Engineering Support During Construction (5.5.1.2.3.5.3.6) / CEISTemplate

Cost Estimating Input Sheet

WBS#	5.5.1.2.3.5.4.1	WBS Title:	Ops Management and Planning Support		
Prepared By: C. Henderson		Rev	0	Date:	09/12/02

Scope Description:

This work scope provides for operations management and work package preparation to support tank closure activities conducted in the tank farm. Operations management includes provisions for management reporting, coordination, scheduling, and issues management. Planning support includes JCS work package preparation for all activities conducted in and around the tank farms.

Estimating Assumptions & Exclusions :

Management includes 1 Operations Manager and 1 Radcon Manager at an average 1/2 time level of effort.
Management support begins approximately 2 months prior to field work to support planning and preparation efforts and continues through to project closeout.
Planning support includes the preparation of 3 work packages: 1 for site preparation outside the tank farm, 1 to incorporate the construction (site prep) planning into the JCS system, and 1 for activities to be conducted inside the tank farm to close 241-C-106. Dedicated planning support is assumed for the project over a duration of 5 months.

Basis of Estimate:

Estimate is based on engineering judgment.

Contingency: Level of Confidence/Risks Identification

Contingency is addressed at the summary estimate level for all tank closure activities.

Estimating notes:(Including identification of environmental/productivity factors):

1. Labor hour estimate based on 10 months x 160 hrs/month x 1/2 time = 800 hours
2 Labor hour estimate based on 1 FTE for a period of 4 months. 4 months x 160 hrs/month = 640 hrs.
3. Labor hour estimate based on 8 months x 160 hrs/month x 1/2 time = 640 hours
4. Enhanced work package planning includes 1/2 day field walk down and 1/2 day planning session with 2 operators, two field work supervisors, 2 HPTs, 2 IH Techs, 2 Riggers, and 1 Ops Manager.
5. Assume 1 simple, 1 moderate, and 1 complex work packages will be required. Cost for a simple work package = $15K, moderate= $20K, and complex $25K. These do not include ECN and USQ preparation which are covered by other activities.

6.0 Resource Requirements:

Act. #	Activity Description	Res Code	Res Type	FY	Note #	Bud.Qty	BQ Rate	Factors	$
54101	Tank Farm Ops Management	LM02E	Ops Mgr	2004	1	800	76.14	0%	$60,912
54102	Tank Farm Ops Management	LM02E	RadCon Mgr	2004	1	800	76.14	0%	$60,912
54103	Provide planning support	LE13E	Planner	2004	2	640	64.34	0%	$41,178
54101	Tank Farm Ops Management	LM02E	Ops Mgr	2005	3	640	76.14	0%	$48,730
54101	Tank Farm Ops Management	LM02E	RadCon Mgr	2005	3	640	76.14	0%	$48,730
54103	Enhanced Work Package Planning	LM02E	Field Supv	2004	4	18	76.14	0%	$1,371
54103	Enhanced Work Package Planning	LR05B	Operators	2004	4	18	44.76	0%	$806
54103	Enhanced Work Package Planning	LT05B	HPT	2004	4	18	41.86	0%	$753
54103	Enhanced Work Package Planning	LT06B	IH Tech	2004	4	18	42.70	0%	$769
54103	Enhanced Work Package Planning	LC00B	Rigger	2004	4	18	42.90	0%	$772
54103	Enhanced Work Package Planning	LM02E	Ops Mgr	2004	4	9	76.14	0%	$685
54103	Work package preparation		CHG	2004	5	60	1000.00	0%	$60,000
									$0
									$0
									$0
									$0
									$0
									$0
									$0
									$0
						WBS Estimate Total			$325,617

9/12/2002 - 2:14 PM

OpsMgmtandPlanningSupport(55123541) / CEISTemplate

Cost Estimating Input Sheet

WBS#	5.5.1.2.3.5.4.2	WBS Title:	Construction Support		
Prepared By: C. Henderson		Rev.#	0	Date: 9/12/02	

Scope Description:

This work scope provides for operations support during tank farm preparation work prior to placement of fill into tank C-106. It is assumed that the preparation work would be performed by construction forces.

Estimating Assumptions & Exclusions :

It is assumed that operations support will be required during construction activities will include 2 Operators, 2 HPTs, 2 IH techs, 1 Radcon Eng, and 1 clerk.
Operations management and radcon management is covered separately under WBS 5.5.1.2.3.5.4.1

Basis of Estimate:

Estimate is based on current tank farm operating requirements. A factor of 50% is applied for SWP work and a factor of 30% is applied to delays in field activities caused by inclement weather (factor=1.5*1.3 = 1.95).

Contingency: Level of Confidence/Risks Identification

Contingency is addressed at the summary estimate level for all tank closure activities.

Estimating notes:(including identification of environmental/productivity factors):

1. Labor estimate is based on dedicated support for a period of 10 days.
2. Labor estimate is based on 1/2 time support for a period of 10 days.

6.0 Resource Requirements:

Act. #	Activity Description	Res Code	Res Type	FY	Note #	Bud.Qty	BQ Rate	Factors	$
54201	Operations Support during Const.	LR05B	Operators (2)	2004	1	80	44.76	195%	$6,983
54201	Operations Support during Const.	LT05B	HPTs (2)	2004	1	80	41.86	195%	$6,530
54201	Operations Support during Const.	LT06B	IH Tech (2)	2004	1	80	42.70	195%	$6,661
54201	Operations Support during Const.	LE13E	Radcon Eng	2004	2	40	64.34	0%	$2,574
54201	Operations Support during Const.	LG02N	Clerk	2004	1	80	23.16	0%	$1,853
									$0
									$0
									$0
									$0
									$0
									$0
									$0
									$0
									$0
									$0
									$0
									$0
									$0
									$0
									$0
								WBS Estimate Total	$24,600

8/12/2002 - 12:46 PM

ConstructionSupport (55123542) / CEISTemplate

Cost Estimating Input Sheet

WBS#	5.5.1.2.3.5.4.3	WBS Title:	Operations Training		
Prepared By: C. Henderson		Rev #	0	Date: 9/12/02	

Scope Description:

This work scope provides for training of the operations staff supporting the tank closure activities. Training materials will be prepared to provide an overview of the project, objectives of the heel stabilization and tank fill steps, and the grout delivery/production system.

Estimating Assumptions & Exclusions :

Training materials will be prepared by 2 professional staff over a period of 2 weeks.
Training will be conducted in a 1 day training session that includes 4 times the standard operations support crew to accommodate the potential for multiple shifts and absences.

Basis of Estimate:

Estimate is based on engineering judgment. It is assumed that training would not include mock up and cold testing. No factors are applied to this work as it is not performed in the field.

Contingency: Level of Confidence/Risks Identification

Contingency is addressed at the summary estimate level for all tank closure activities.

Estimating notes:(including identification of environmental/productivity factors):

1. Estimate based on 2 professional staff * 40 hrs/week * 2 weeks = 160 hrs
2. Estimate based on 2 professional staff * 8 hrs/day * 2 days = 32 hrs
3. Estimate based on 8 operators * 8 hrs/day * 2 days = 128 hrs
4. Estimate based on 8 HPTs * 8 hrs/day * 2 days = 128 hrs
5. Estimate based on 8 IH techs * 8 hrs/day * 2 days = 128 hrs
6. Estimate based on 2 radcon eng * 8 hrs/day * 2 days = 32 hrs
7. Estimate based on 2 operation managers * 8 hrs/day * 2 days = 32 hrs
8. Estimate based on 2 radcon managers * 8 hrs/day * 2 days = 32 hrs
9. Training materials estimated at 30 students x $200/student = $6,000

6.0 Resource Requirements:

Act. #	Activity Description	Res Code	Res Type	FY	Note #	Bud.Qty	BQ Rate	Factors	$
54301	Prepare training materials	LP00E	Professional	2004	1	160	47.30	0%	$7,568
54301	Conduct training	LP00E	Professional	2004	2	32	47.30	0%	$1,514
54301	Attend training	LR05B	Operators	2004	3	128	44.76	0%	$5,729
54301	Attend training	LT05B	HPTs	2004	4	128	41.86	0%	$5,358
54301	Attend training	LT06B	IH Techs	2004	5	128	42.70	0%	$5,466
54301	Attend training	LE13E	Radcon Eng	2004	6	32	64.34	0%	$2,059
54301	Attend training	LM02E	Ops Manager	2004	7	32	76.14	0%	$2,436
54301	Attend training	LM02E	Radcon Mgr	2004	8	32	76.14	0%	$2,436
54301	Training Materials	21L	Training Matl.	2004	9	6	1000.00	0%	$6,000
									$0
									$0
									$0
									$0
									$0
									$0
									$0
									$0
									$0
									$0
									$0
							WBS Estimate Total		38566.4

9/12/2002 - 12:50 PM

OperationsTraining(55123543) / CEISTemplate

Cost Estimating Input Sheet

WBS#	5.5.1.2.3.5.4.4	WBS Title:	Stabilize Heel - 241-C-105	
Prepared By: C. Henderson		Rev #	0	Date: 9/12/02

Scope Description:

This activity involves placement of the grout material into 241-C-106 to stabilize the residual waste heel. The grout will be prepared outside the tank farm by a subcontractor and pumped to the tank through slicklines (pipe or hose). During grouting operations the operations crew will monitor in tank conditions, monitor the grout line and tank ventilation system, and access the central pump pit as required to remove and install grout tremie lines (flex hose) used to pump grout into the tank. This activity also includes video surveillance of the waste stabilization within the tank.

Estimating Assumptions & Exclusions :

It is assumed that separate crews will be utilized to provide for longer grout operating shifts. Once the grout plant is operating it is beneficial to run for longer durations to minimize cleanup and secondary waste generation. The camera crew consists of 4 operators, 1 field work supervisor, 2 craft, 1 HPT, and 1 IH tech. It is assumed that the entire waste stabilization effort will be videotaped. The operations crew to support grout placement consists of 1 field work supervisor, 2 operators and 1 HPT to verify integrity of the grout line and perform routine surveillance on the exhauster.

Basis of Estimate:

Engineering judgment. This is a first of a kind activity. A factor of 50% is applied for SWP and a factor of 30% is applied to account for field delays due to inclement weather (factor = 1.5*1.3=1.95).

Contingency: Level of Confidence/Risks Identification

Contingency is addressed at the summary estimate level for all tank closure activities.

Estimating notes:(including identification of environmental/productivity factors):

1. Labor estimate is based on dedicated support from 2 operators x 2 shifts x 5 days x 8 hrs/day = 160 hrs
2. Labor estimate is based on dedicated support from 1 HPT/shift x 2 shifts x 5 days x 8 hrs = 80 hrs.
3. Labor estimate is based on dedicated support from 1 IH tech/shift x 2 shifts x 5 days x 8 hrs = 80 hrs
4. Labor estimate is based on 4 operators x 2 shifts x 5 days x 8 hrs/day = 320 hrs
5. Labor estimate is based on 1 field work supervisor x 2 shifts x 5 days x 8 hrs/day = 80 hrs
6. Labor estimate is based on 2 craft (fitter/instrument tech) x 2 shifts x 5 days x 8 hrs/day = 160 hrs
7. Labor estimate is based on 1 HPT x 2 shifts x 5 days x 8 hrs/day = 80 hrs
8. Labor estimate is based on 1 IH tech x 2 shifts x 5 days x 8 hrs/day = 80 hrs

6.0 Resource Requirements:

Act.#	Activity Description	Res Code	Res Type	FY	Note #	Bud.Qty	BQ Rate	Factors	$
54401	Waste heel stabilization	LR05B	Operators	FY04	1	160	44.76	195%	$13,965
54401	Waste heel stabilization	LT05B	HPTs	FY04	2	80	41.86	195%	$6,530
54401	Waste heel stabilization	LM02E	Field Supv	FY04	3	80	76.14	195%	$11,878
									$0
54402	In tank video stabilization	LR05B	Operators		4	320	44.76	195%	$27,930
54402	In tank video stabilization	LM02E	Field Supv		5	80	76.14	195%	$11,878
54402	In tank video stabilization		Craft		6	160	44.76	195%	$13,965
54402	In tank video stabilization	LT05B	HPT		7	80	41.86	195%	$6,530
54402	In tank video stabilization	LT06B	IH Tech		8	80	42.70	195%	$6,661
									$0
									$0
									$0
									$0
									$0
									$0
									$0
									$0
									$0
									$0
									$0
						WBS Estimate Total			$99,338

9/12/2002 - 2:15 PM

StabilizeHeel(55123544) / CEISTemplate

Cost Estimating Input Sheet

Page 1 of 1

WBS#	5.5.1.2.3.5.4.5	WBS Title:	In Tank Equipment Stabilization - 241-C-106		
Prepared By: C. Henderson			Rev #	0	Date: 9/12/02

Scope Description:

This activity involves the stabilization of in tank equipment with grout. Following stabilization of the waste heel, in tank equipment will be stabilized prior to bulk filling the remainder of the tank. In tank equipment stabilization will involve pit entry, disassembly and/or cutting equipment and filling equipment to the extent possible using a hand held grout line. Cover blocks and plates will be removed as necessary to gain access to in tank equipment.

Estimating Assumptions & Exclusions :

A relatively large crew size will be required to stabilize in tank equipment. The crew size consists of 5 operators, 1 field work supervisor, 2 HPTs, 1 IH tech, 2 fitters, and 2 electricians. It is conservatively assumed that stabilization of equipment will be done on mask. A camera crew will be utilized to video equipment stabilization activities. The camera crew consists of 4 operators, 1 field work supervisor, 2 craft, 1 HPT, and 1 IH tech. A crane crew will be used to remove cover blocks and cover plates. It is assumed that the cost for coverblock/coverplate removal is $10K (2 days of a crane crew of 9).

Basis of Estimate:

Estimate is based on engineering judgment for first of a kind activity. A factor of 30% is applied to account for weather and a factor of 100% is applied for mast work (includes special work procedures). Factor = 1.3 x 2 = 2.6.

Contingency: Level of Confidence/Risks Identification

Contingency is addressed at the summary estimate level for all tank closure activities.
Due to the configuration of in tank equipment, there are a number of void spaces between the in tank equipment and the risers that will require further evaluation during detailed design. It is assumed that the resources estimated for stabilizing the in tank equipment include grouting these small void spaces however, further evaluation may find grouting these void spaces requires additional resources or alternative approaches.

Estimating notes:(including identification of environmental/productivity factors):

1. Labor hours are estimated based on the crew size identified in the assumptions sections, 2 shifts/day, and a duration of 15 days.
Operators = 15 days x 5 operators x 2 shifts x hrs/day = 1350 hrs
Field work supervisor = 15 days x 1 supv x 2 shifts x 9 hrs/day = 270 hrs
HPTs = 15 days x 2 HPTs x 2 shifts x 9 hrs/day = 540 hrs
IH tech = 15 days x 1 IH tech x 2 shifts x 9 hrs/day = 270 hrs
Fitters = 15 days x 2 fitters x 2 shifts x 9 hrs/day = 540 hrs
Electricians = 15 days x 2 electricians x 2 shifts x 9 hrs/day = 540 hrs
2. Labor hours are estimated for the camera crew size identified in the assumptions and single shift coverage for a duration of 15 days at one shift per day.
3. 241-C-106 has cover blocks/plates on 2 pits that will require removal to facilitate in tank equipment stabilization. Cost is estimated at $10K x 1.3 (weather allowance) x 2 pits = $26K

6.0 Resource Requirements:

Act. #	Activity Description	Res Code	Res Type	FY	Note #	Bud Qty	BQ Rate	Factors	$
54501	Stabilize in tank equipment w/grout	LR05B	Operators	FY04	1	1200	44.76	260%	$139,651
54501	Stabilize in tank equipment w/grout	LM02E	Field Supv	FY04	1	240	76.14	260%	$47,511
54501	Stabilize in tank equipment w/grout	LT05B	HPTs	FY04	1	480	41.86	260%	$52,241
54501	Stabilize in tank equipment w/grout	LT06B	IH Tech	FY04	1	240	42.70	260%	$26,645
54501	Stabilize in tank equipment w/grout	LC08B	Fitters	FY04	1	480	41.78	260%	$52,141
54501	Stabilize in tank equipment w/grout	LC02B	Electricians	FY04	1	480	44.36	260%	$55,361
54501	Cover plate/block removal	21L		FY04	3	26	1000	0%	$26,000
54502	video equipment stabilization	LR05B	Operators	FY04	2	480	44.76	260%	$55,860
54502	video equipment stabilization	LM02E	Field Supv	FY04	2	120	76.14	260%	$23,756
54502	video equipment stabilization		Craft	FY04	2	240	42.90	260%	$26,770
54502	video equipment stabilization	LT05B	HPT	FY04	2	120	41.86	260%	$13,060
54502	video equipment stabilization	LT06B	IH Tech	FY04	2	120	42.70	260%	$13,322
									$0
									$0
									$0
									$0
									$0
									$0
									$0
									$0
						WBS Estimate Total			$532,320

9/12/2002 - 2:56 PM

In-TankEquipStabilization(55123545) / CEISTemplate

Cost Estimating Input Sheet

WBS#	5.5.1.2.3.5.4.8	WBS Title:	Bulk Fill Tank 241-C-106	
Prepared By: C. Henderson		Rev #	0	Date: 9/12/02

Scope Description:

This activity involves the bulk filling of tank 241-C-106 with grout to provide for long term stabilization of the tank structure. The grout will be prepared outside the tank farm fenceline by a subcontractor and pumped into the farm and into the tank through a slickline (grou pipe/hose). During grouting operations the operations crew will monitor in tank conditions, monitor the grout line and the ventilation system. Periodic video surveillance of the tank fill operation will be performed by a camera crew.

Estimating Assumptions & Exclusions :

It is assumed that separate crews will be utilized to provide for longer grout operating shifts. Once the grout plant is in operation it s beneficial to run for longer durations to minimize cleanup times and secondary waste generation. The operations crew supporting the grouting operation consists of a field work supervisor, 2 operators, and 1 HPT. The camera crew consists of 4 operators, 1 field work supervisor, 2 craft, 1 HPT, and 1 IH tech. It is assumed that camera crew coverage of the bulk fill operation can be reduced to approximately 1/2 time.

Basis of Estimate:

Engineering judgment

Contingency: Level of Confidence/Risks Identification

Contingency is addressed at the summary estimate level for all tank closure actions.

Estimating notes:(including identification of environmental/productivity factors):

1. Labor estimate is based on dedicated support from 2 operators x 2 shifts x 5 days x 8 hrs/day = 160 hrs
2. Labor estimate is based on dedicated support from 1 HPT x 2 shifts x 5 days x 8 hrs/day =80 hrs
3. Labor estimate is based on dedicated support from 1 field work supervisor x 2 shifts x 5 days x 8 hrs/day = 80 hrs
4. Labor estimate is based on periodic video taping 1 shift/day: 5 days x 4 operators x 8 hrs/day = 160 hrs
5. Labor estimate is based on periodic video taping 1 shift/day x 5 days x1 field work supervisor x 8 hrs = 40 hrs
6. Labor estimate is based on periodic video taping 1 shift/day x 5 days x 2 craft x 8 hrs =80 hrs
7. Labor estimate is based on periodic video taping 1 shift/day x 5 days x 1 HPT x 8 hrs = 40 hrs
8. Labor estimate is based on periodic video taping 1 shift/day x 5 daysx 1 IH tech x 8 hrs = 40 hrs

6.0 Resource Requirements:

Act. #	Activity Description	Res Code	Res Type	FY	Note #	Bud.Qty	BQ Rate	Factors	$
54601	Bulk Fill tank	LR05B	Operator	FY04	1	160	44.76	195%	$13,965
54601	Bulk Fill tank	LT05B	HPT	FY04	2	80	41.86	195%	$6,530
54601	Bulk Fill tank	LM02E	Field Supv	FY04	3	80	76.14	195%	$11,878
									$0
54602	Video bulk tank fill	LR05B	Operators	FY04	4	160	44.76	195%	$13,965
54602	Video bulk tank fill	LM02E	Field Supv	FY04	5	40	76.14	195%	$5,939
54602	Video bulk tank fill		Craft	FY04	6	80	44.76	195%	$6,983
54602	Video bulk tank fill	LT05B	HPT	FY04	7	40	41.86	195%	$3,265
54602	Video bulk tank fill	LT06B	IH Tech	FY04	8	40	42.70	195%	$3,331
									$0
									$0
									$0
									$0
									$0
									$0
									$0
									$0
									$0
									$0
									$0
						WBS Estimate Total			$65,855

9/12/2002 - 2:56 PM

BulkFillTank(65123546) / CEISTemplate

Cost Estimating Input Sheet

WBS#	5.5.1.2.3.5.4.7	WBS Title:	Tank Riser Fill/Stabilization 241-C-106		
Prepared By: C. Henderson			Rev.#	0	Date: 9/12/02

Scope Description:

This activity involves the stabilization of the tank risers with grout. Following bulk fill of the tank, the tank risers will be filled with grout using a hand held grout line.

Estimating Assumptions & Exclusions :

A relatively large crew size will be required to complete tank riser fill/stabilization. The crew size consists of 5 operators, 1 field work supervisor, 2 HPTs and 1 IH tech. It is conservatively assumed that tank riser fill/stabilization will be done on mask since the tank ventilation system will be shut down following bulk tank fill. No video taping of the riser fill/stabilization activities is assumed.

Basis of Estimate:

Estimate is based on engineering judgment for first of a kind activity. A factor of 30% is applied for weather, and a factor of 100% is applied for mask work. Factor = 1.3 x 2= 2.6

Contingency: Level of Confidence/Risks Identification

Contingency is addressed at the summary estimate level for all tank closure activities.

Estimating notes:(including identification of environmental/productivity factors):

1. Labor estimate is based on 5 days x 5 operators/shift x 2 shifts x 8 hrs/day = 400 hrs
2. Labor estimate is based on 5 days x 1 field work supervisor/shift x 2 shifts x 8 hrs = 80 hrs
3. Labor estimate is based on dedicated staff for 5 days x 2 HPTs /shift x 2 shifts x 8 hrs/day = 160 hrs
4. Labor estimate is based on dedicated staff for 5 days x 1 IH tech/shift x 2 shifts x 8 hrs/day = 80 hrs

6.0 Resource Requirements:

Act. #	Activity Description	Res Code	Res Type	FY	Note #	Bud.Qty	BQ Rate	Factors	$
54701	Fill/Stabilize tank risers with grout	LR05B	Operators	FY04	1	400	44.76	260%	$46,550
54701	Fill/Stabilize tank risers with grout	LM02E	Field Supv	FY04	2	80	76.14	260%	$15,837
54701	Fill/Stabilize tank risers with grout	LT05B	HPT	FY04	3	160	41.86	260%	$17,414
54701	Fill/Stabilize tank risers with grout	LT06B	IH tech	FY04	4	80	42.70	260%	$8,882
									$0
									$0
									$0
									$0
									$0
									$0
									$0
									$0
									$0
									$0
									$0
									$0
									$0
									$0
									$0
									$0
								WBS Estimate Total	$88,683

9/12/2002 - 2:57 PM

Tank Riser FillStabilization (55123547) / CEISTemplate

Cost Estimating Input Sheet

WBS#	5.5.1.2.3.6.4.8	WBS Title:	Tank Farm Surface Restoration and Demob		
Prepared By: C. Henderson			Rev #	0	Date: 9/12/02

Scope Description:

This activity involves providing intrusion/isolation measures for the tank following stabilization to prevent exposure of the risers to rain water, removal/relocation of equipment used to stabilize the tank, and general housekeeping of the tank farm area.

Estimating Assumptions & Exclusions:

It is assumed that weather sealing of the risers is a 2 day effort and general cleanup/housekeeping and demobilization is a 3 day effort.

Basis of Estimate:

Estimate is based on engineering judgment. A factor of 50% is applied for SWP and a factor of 30% is applied to account for weather. Factor = 1.5*1.3= 195%

Contingency: Level of Confidence/Risks Identification

Contingency is addressed at the summary estimate level for all tank closure activities

Estimating notes:(including identification of environmental/productivity factors):

1. Labor estimate is based on 6 operators for a period of 5 days. (6 operators x 5 days x 8 hrs/day)
2. Labor estimate is based on 1 field work supervisor for a period of 5 days (1 supv x 5 days x 8 hrs/day)
3. Labor estimate is based on 1 HPT for a period of 5 days
4. Labor estimate is based on 1 IH tech for a period of 5 days
5. ROM estimate for disposal of miscellaneous materials (grout lines, pit cover plates, ventilation equip, etc) used in the tank closure operation. Assume 3 burial boxes (4' x 4' x 8') are required for disposal of LLMW from the tank closure operation. The storage/disposal fee for LLMW is $113.87/cubic foot based on current waste management costs for storage of LLMW.
6. 3 burial boxes at $13.8K/each
7. Transportation of burial boxes is assumed at $1K/shipment.

6.0 Resource Requirements:

Act. #	Activity Description	Res Code	Res Type	FY	Note #	Bud.Qty	BQ Rate	Factors	$
54801	weather seal risers/housekeeping	LR05B	Operators	FY04	1	240	44.76	195%	$20,948
54801	weather seal risers/housekeeping	LM02E	Field Supv	FY04	2	45	76.14	195%	$6,681
54801	weather seal risers/housekeeping	LT05B	HPT	FY04	3	45	41.86	195%	$3,673
54801	weather seal risers/housekeeping	LT06B	IH tech	FY04	4	45	42.70	195%	$3,747
54801	waste disposal fee				5	43.7	1000.00	0%	$43,700
54801	burial box	21L	Material	FY04	6	41.4	1000.00	0%	$41,400
54801	transportation	21L	Transport	FY04	7	3	1000.00	0%	$3,000
									$0
									$0
									$0
									$0
									$0
									$0
									$0
									$0
									$0
									$0
									$0
									$0
									$0
									$0
							WBS Estimate Total		123149

9/12/2002 - 1:08 PM

RestoreandDemob(55123548) / CEISTemplate

Cost Estimating Input Sheet

Page 1 of 1

WBS#	5.5.1.2.3.6.2.1	WBS Title:	Site Improvement			
Prepare	LE Ulbricht		Rev #	0	Date:	9/12/02

Scope Description:

Procurement of construction forces service for WBS 5.5.1.2.3.6.3.4, Pre Grouting Tank Preparation.

Estimating Assumptions & Exclusions :

Basis of Estimate:

Standard 3% procurement costs for implementing a construction forces service contract

Contingency: Level of Confidence/Risks Identification

Contingency is addressed at the summary estimate level for all tank closure activities.

Estimating notes:(including identification of environmental/productivity factors):

1. Pre Grouting Tank Preparation, WBS 5.5.1.2.3.6.3.4

6.0 Resource Requirements:

Act. #	Activity Description	Res Code	Res Type	FY	Note #	Bud.Qty	BQ Rate	Factors	$
62101	Site Improvement	LP00E	CHG Professi	2004	1	2966.0	1,000	3%	$88,980
									$0
									$0
									$0
									$0
									$0
									$0
									$0
									$0
									$0
									$0
									$0
									$0
									$0
									$0
									$0
									$0
									$0
									$0
									$0
							WBS Estimate Total		$88,980

9/12/2002 - 1:12 PM

Site Improvement (5.5.1.2.3.6.2.1) / CEISTemplate

Cost Estimating Input Sheet

WBS#	5.5.1.2.3.5.2.2	WBS Title:	Grout Contractor		
Prepare	LE Ulbricht	Rev #	0	Date:	9/12/02

Scope Description:

Procurement of services from grout production vendor for the 241-C-200 series tanks is included in those for the 241-C-106 tank under WBS 5.5.1.2.3.5.2.2

Estimating Assumptions & Exclusions :

Basis of Estimate:

Contingency: Level of Confidence/Risks Identification

Contingency is addressed at the summary estimate level for all tank closure activities.

Estimating notes:(including identification of environmental/productivity factors):

6.0 Resource Requirements:

Act. #	Activity Description	Res Code	Res Type	FY	Note #	Bud.Qty	BQ Rate	Factors	$
								0%	$0
								0%	$0
								0%	$0
								0%	$0
								0%	$0
									$0
									$0
								0%	$0
								0%	$0
								0%	$0
								0%	$0
									$0
									$0
									$0
									$0
									$0
									$0
									$0
							WBS Estimate Total		0

9/12/2002 - 2:17 PM

Grout Contractor (5.5.1.2.3.5.2.2) / CEISTemplate

Cost Estimating Input Sheet

WBS#	5.5.1.2.3.6.2.3	WBS Title:	Monitoring Equipment		
Prepare LE Ulbricht		Rev.#	0	Date:	9/12/02

Scope Description:

Procurement of in-tank video camera, one for each of the four 241-C-200 series tanks at 35.5K per.

Estimating Assumptions & Exclusions :

Basis of Estimate:

241-S-112 CEIS for in-tank video procurement

Contingency: Level of Confidence/Risks Identification

Contingency is addressed at the summary estimate level for all tank closure activities.

Estimating notes:(Including identification of environmental/productivity factors):

6.0 Respurce Requirements:

Act. #	Activity Description	Res Code	Res Type	FY	Note #	Bud.Qty	BQ Rate	Factors	$
62301	Monitoring Equipment	21L	camera	2004		142.00	1000.00	0%	142,000
		21L	sales tax	2004		142.00	1000.00	8.3%	$11,786
		21L	procurement	2004		142.00	1000.00	3%	$4,260
		21L	warehouse	2004		142.00	1000.00	10%	$14,200
									$0
									$0
									$0
									$0
									$0
									$0
									$0
									$0
									$0
									$0
									$0
									$0
									$0
									$0
									$0
									$0
						WBS Estimate Total			172,246

9/12/2002 - 2:18 PM

Monitoring Equipment (5.5.1.2.3.6.2.3) / CEISTemplate

Cost Estimating Input Sheet

WBS#	5.5.1.2.3.6.2.4	WBS Title:	Pit Cover Plates		
Prepare	LE Ulbricht	Rev #	0	Date:	9/12/02

Scope Description:

Procurement for construction forces to remove cover blocks from jet pump pit, fab new cover plates to print, install pump pit cover plate for tank stabilization, modify HVAC pit cover plate for pit stabilization, remove jet pump pit and HVAC cover plates for riser stabilization, and replace jet pump pit cover plates.

Estimating Assumptions & Exclusions :

Basis of Estimate:

Engineering judgment with 241-S-102 cost estimate

Contingency: Level of Confidence/Risks Identification

Contingency is addressed at the summary estimate level for all tank closure activities.

Estimating notes:(including identification of environmental/productivity factors):

1. Fabricate pump pit cover plate for each of the 4 241-C-200 series tanks. 55K each per 241-S-102 estimate

6.0 Resource Requirements:

Act. #	Activity Description	Res Code	Res Type	FY	Note #	Bud.Qty	BQ Rate	Factors	$
62401	Pit Cover Plates	21L	steel fab	2004	1	220.0	1000.00	0%	220,000
		21L	sales tax	2004		220.0	1000.00	8.3%	$18,260
		21L	procurement	2004		220.0	1000.00	3%	$6,600
		21L	warehouse	2004		220.0	1000.00	10%	$22,000
									$0
									$0
									$0
									$0
									$0
									$0
									$0
									$0
									$0
									$0
									$0
									$0
									$0
									$0
								WBS Estimate Total	266,860

9/12/2002 - 1:15 PM

Pit Cover Plates (5.5.1.2.3.6.2.4) / CBSTemplate

Cost Estimating Input Sheet

WBS#	5.5.1.2.3.5.2.5	WBS Title:	Ventilation System		
Prepare	LE Ulbricht	Rev #	0	Date:	9/12/02

Scope Description:

Procurement of a inlet filter assemblies. Reuse 500 scfm portable exhauster with stack monitor and instrumentation controls purchased for 241-C-106 under Ventilation System, WBS 5.5.1.2.3.5.2.4

Estimating Assumptions & Exclusions :

Basis of Estimate:

costs for 241-S-102 inlet filter

Contingency: Level of Confidence/Risks Identification

Contingency is addressed at the summary estimate level for all tank closure activities.

Estimating notes:(including identification of environmental/productivity factors):

1. One inlet filter for each of the 4 241-C-200 series tanks at 25K per

6.0 Resource Requirements:

Act. #	Activity Description	Res Code	Res Type	FY	Note #	Bud Qty	BQ Rate	Factors	$
62501	Ventilation Systems	21L	inlet filter	2004	1	100	1000.00	0%	100,000
		21L	sales tax	2004		100	1000.00	8.3%	8,300
		21L	procurement	2004		100	1000.00	3%	3,000
		21L	warehouse	2004		100	1000.00	10%	10,000
									0
									0
									0
									0
									0
									0
									0
									0
									0
									0
									0
									0
									0
									0
									0
							WBS Estimate Total		121,300

9/12/2002 - 1:17 PM

Ventilation System (5.5.1.2.3.5.2.5) / CEISTemplate

Cost Estimating Input Sheet

WBS#	5.5.1.2.3.6.3.1	WBS Title:	Construction Management		
Prepare	LE Ulbricht	Rev #	0	Date:	9/12/02

Scope Description:

Management of construction forces service for WBS 5.5.1.2.3.6.3.4, Pre Grouting Tank Preparation.

Estimating Assumptions & Exclusions :

Basis of Estimate:

Standard 20% construction management costs for implementing a construction forces service contract

Contingency: Level of Confidence/Risks Identification

Contingency is addressed at the summary estimate level for all tank closure activities.

Estimating notes:(including identification of environmental/productivity factors):

1. Pre Grouting Tank Preparation, WBS 5.5.1.2.3.6.3.4

6.0 Resource Requirements:

Act. #	Activity Description	Res Code	Res Type	FY	Note #	Bud.Qty	BQ Rate	Factors	$
63101	Construction Management	21L	CF services	2004	1	2966.0	1,000	20%	593,200
									$0
									$0
									$0
									$0
									$0
									$0
									$0
									$0
									$0
									$0
									$0
									$0
									$0
									$0
									$0
									$0
									$0
									$0
									$0
								WBS Estimate Total	593,200

9/12/2002 - 1:25 PM

Construction Management (5.5.1.2.3.6.3.1) / CEISTemplate

Cost Estimating Input Sheet

Page 1 of 1

WBS#	5.5.1.2.3.6.3.2	WBS Title:	Acceptance Inspection		
Prepare	LE Ulbricht	Rev #	0	Date:	9/12/02

Scope Description:

Acceptance inspection of construction forces service for WBS 5.5.1.2.3.6.3.4, Pre Grouting Tank Preparation.

Estimating Assumptions & Exclusions :

Basis of Estimate:

Standard 10% acceptance inspection costs for a construction forces service contract

Contingency: Level of Confidence/Risks Identification

Contingency is addressed at the summary estimate level for all tank closure activities.

Estimating notes:(including identification of environmental/productivity factors):

1. Pre Grouting Tank Preparation, WBS 5.5.1.2.3.6.3.4

6.0 Resource Requirements:

Act. #	Activity Description	Res Code	Res Type	FY	Note #	Bud.Qty	BQ Rate	Factors	$
63201	Acceptance Inspection	21L	CF services	2004	1	2966.0	1,000	10%	296,600
									$0
									$0
									$0
									$0
									$0
									$0
									$0
									$0
									$0
									$0
									$0
									$0
									$0
									$0
									$0
									$0
									$0
									$0
									$0
									$0
								WBS Estimate Total	296,600

9/12/2002 - 1:27 PM

Acceptance Inspection (5.5.1.2.3.6.3.2) / CBSTemplate

Cost Estimating Input Sheet

WBS#	5.5.1.2.3.6.3.3	WBS Title:	Grout Delivery, Preparation, and Production
Prepare	LE Ulbricht	Rev #	0 Date: 9/12/02

Scope Description:

Vendor provided services including mobilization, grout production, and delivery of grout to tank

Estimating Assumptions & Exclusions :

Basis of Estimate:

ROM estimate from potential vendor

Contingency: Level of Confidence/Risks Identification

Contingency is addressed at the summary estimate level for all tank closure activities.

Estimating notes:(including identification of environmental/productivity factors):

1. The ROM estimate cost breakdown from the grout vendor is provided in Appendix A of the Basis of Design Report, CEES-0014; the total cost is presented here.

6.0 Resource Requirements:

Act. #	Activity Description	Res Code	Res Type	FY	Note #	Bud.Qty	BQ Rate	Factors	$
63301	Produce Heel Stabilization Grout (241-C-201)				1				$0
63302	Produce Tank Fill Grout (241-C-201)				1				$0
63303	Produce Equip Stab/Riser Fill Grout (241-C-201)				1				$0
63304	Produce Heel Stabilization Grout (241-C-202)				1				$0
63305	Produce Tank Fill Grout (241-C-202)				1				$0
63306	Produce Equip Stab/Riser Fill Grout (241-C-202)				1				$0
63307	Produce Heel Stabilization Grout (241-C-203)				1				$0
63308	Produce Tank Fill Grout (241-C-203)				1				$0
63309	Produce Equip Stab/Riser Fill Grout (241-C-203)				1				$0
63310	Produce Heel Stabilization Grout (241-C-204)				1				$0
63311	Produce Tank Fill Grout (241-C-204)				1				$0
63312	Produce Equip Stab/Riser Fill Grout (241-C-204)				1				$0
					1	468.3	1000.00		468,300
									$0
									$0
									$0
									$0
									$0
									$0
									$0
							WBS Estimate Total		$468,300

Cost Estimating Input Sheet

WBS#	5.5.1.2.3.6.3.4	WBS Title:	Pre Grouting Tank Preparation		
Prepar	LE Ulbricht	Rev #	0	Date:	9/12/02

Scope Description:

Move 500 scfm portable exhauster from installed position at 241-C-106 to near the 241-C-200 Series tanks, provide temporary power to the portable exhauster, replace existing pump pit covers with new cover plates at each tank, install duct from portable exhauster to both pits at each tank through a common header, install high flow filter on the pump pit at each tank, and install camera in each tank.

Estimating Assumptions & Exclusions :

Basis of Estimate:

Estimate assumes work is contracted to construction forces. Engineering judgment coupled with other project cost estimates. A factor of 50% is applied for SWP work and a factor of 30% is applied to delays in field activities caused by inclement weather (factor = 1.5*1.3 = 1.95)

Contingency: Level of Confidence/Risks Identification

Contingency is addressed at the summary estimate level for all tank closure activities.

Estimating notes:(including identification of environmental/productivity factors):

1. Based on 241-C-103 installation and test of exhauster for 52.1K. Includes $28,000 for HVAC pit cover modification for installation of new duct; based on 241-U-111 pit cover plate mod.
2. Based on 241-S-103 estimate
3. Budget quantity is sum of 21L total costs for activities 63501 through 63510.
4. Based on the unit cost for removal of the AMS as developed on sheet 2 of this CEIS applied once for each 241-200 series tank.
5. Per 241-S-103 trenching and laying hose in hose waste transfer line cost is $40/ft. Estimate uses 300 feet of pipe at $30/ft, subtracting $10/ft because no trenching or shielding required.
6. From W-520 assumes $30/ft at 500 ft = $15,000

6.0 Resource Requirements:

Act. #	Activity Description	Res Code	Res Type	FY	Note #	Bud.Qty	BQ Rate	Factors	$
63501	Install ventilation system (241-C-201)	21L	remove/install	2004	1	80.1	1000.00	195%	156,195
		21L	temp power to	2004	6	15.0	1001.00	195%	29,279
		21L	install duct	2004	2	40.0	1000.00	195%	78,000
		21L	install inlet filt	2004	2	35.0	1000.00	195%	68,250
63502	Install ventilation system (241-C-202)	21L	install duct	2004	2	40.0	1000.00	195%	78,000
		21L	install inlet filt	2004		35.0	1000.00	195%	68,250
63503	Install ventilation system (241-C-203)	21L	install duct	2004	2	40.0	1000.00	195%	78,000
		21L	install inlet filt	2004		35.0	1000.00	195%	68,250
63504	Install ventilation system (241-C-204)	21L	install duct	2004	2	40.0	1000.00	195%	78,000
		21L	install inlet filt	2004		35.0	1000.00	195%	68,250
63505	Install Pit Cover Plate (241-C-201)	21L	remove old/in:	2005	2	50.0	1000.00	195%	97,500
63506	Install Pit Cover Plate (241-C-202)	21L	remove old/in:	2005	2	50.0	1000.00	195%	97,500
63507	Install Pit Cover Plate (241-C-203)	21L	remove old/in:	2005	2	50.0	1000.00	195%	97,500
63508	Install Pit Cover Plate (241-C-204)	21L	remove old/in:	2005	2	50.0	1000.00	195%	97,500
63509	Instrumentation	21L	install camera	2004	2	100	1000.00	195%	195,000
63404	disposition equipment in risers	21L	remove AMS	2004	4	878.2	1000.00	0%	878,248
		21L	general condit	2004	3	2233.7	1000.00	20.0%	446,744
		21L	consumables	2004	3	2233.7	1000.00	4.0%	89,349
		21L	foreman	2004	3	2233.7	1000.00	8.0%	178,698
	TOTAL OF 21L ACTIVITIES								2,948,513
	Install grout slickline in farm			2004	5	30.0	300.00	195.0%	$17,550
						WBS Estimate Total			$2,966,063

9/12/2002 - 2:44 PM

Pre Grouting Tank Preparation (5.5.1.2.3.6.3.4) / CEISTemplate

Cost Estimating Input Sheet

WBS#	5.5.1.2.3.6.3.4a	WBS Title:	Pre Grouting Tank Preparation		
Prepare	C Henderson	Rev #	0	Date:	9/11/02

Scope Description:

This activity involves removal of the Articulated Mast System from the heel pump pit.

Estimating Assumptions & Exclusions :

This estimate is a placeholder for dispositioning the AMS. Removal and disposal was assumed for the Basis of Design report as the more conservative approach to dispositioning the AMS. During detail design alternatives for in-place disposal will be evaluated. It is assumed that the cold test facility and mockups developed for the waste retrieval effort would be utilized for planning the removal step. It is assumed that the AMS will be pulled using a crane, sleeved and bagged with plastic, cut up and placed in burial boxes for disposal.

Engineering judgment coupled with other project cost estimates.
A factor of 50% is applied for SWP work and a factor of 30% is applied to delays in field activities caused by inclement weather (factor = 1.5*1.3 = 1.95)

Contingency: Level of Confidence/Risks Identification

Contingency is addressed at the summary estimate level for all tank closure activities.

Estimating notes:(including identification of environmental/productivity factors):

1. 1 field work supervisor for 10 days (8 days preparation and 2 days execution)
2. 4 pipe fitters for 5 days (3 days planning/prep and 2 days execution)
3. 2 electricians for 5 days (3 days planning and 2 days execution)
4. 5 operators for 5 days (3 days planning/prep and 2 days execution)
5. 1 IH tech for 5 days
6. 2 HPTs for 5 days
7. Crane crew for 3 days - composite rate of $6,500 per day (crew plus crane) taken from S-112 waste retrieval cost estimate.
8. Two 4x4x8 burial boxes at $13,800 each
9. Storage fee for low level mixed waste at $113.87/cubic foot or $14,600/box
10. Radiological engineer for 3 weeks to support equipment removal.

6.0 Resource Requirements:

Act. #	Activity Description	Res Code	Res Type	FY	Note #	Bud.Qty	BQ Rate	Factors	$
63404	Disposition in Tank Equipment	LM02E	Field Supv	2004	1	80.0	76.14	195%	11,878
63404	Disposition in Tank Equipment	LC08B	Pipe Fitter	2004	2	160.0	41.78	195%	13,035
63404	Disposition in Tank Equipment	LC02B	Electricians	2004	3	80.0	44.36	195%	6,920
63404	Disposition in Tank Equipment	LR05B	Operators	2004	4	200.0	44.76	195%	17,456
63404	Disposition in Tank Equipment	LT06B	IH Tech	2004	5	40.0	42.70	195%	3,331
63404	Disposition in Tank Equipment	LT05B	HPT	2004	6	80	41.86	195%	6,530
63404	Disposition in Tank Equipment	LE008E	Rad Eng	2004	10	120	66.61	195%	15,587
63404	Disposition in Tank Equipment	21L	Crane crew	2004	7	19.5	1000.00	195%	38,025
63404	Disposition in Tank Equipment	10L	Burial boxes	2004	8	27.6	1000.00	0.0%	$27,600
63404	Disposition in Tank Equipment	54L	Disposal	2004	9	29.2	1000.00	0.0%	$29,200
63404	Disposition in Tank Equipment	10L	Misc	2004	11	50.0	1000.00	0.0%	$50,000
								WBS Estimate Total	219,562

9/12/2002 - 2:46 PM

Pre Grouting Tank Preparation (5.5.1.2.3.6.3.4) / CEIS-page 2

Cost Estimating Input Sheet

Page 1 of 1

WBS#	5.5.1.2.3.6.3.5	WBS Title:	Engineering Support During Construction		
Prepare	LE Ulbricht	Rev #	0	Date:	9/12/02

Scope Description:

Provide engineering support to the field during construction activities.

Estimating Assumptions & Exclusions :

Basis of Estimate:

Engineering judgment

Contingency: Level of Confidence/Risks Identification

Contingency is addressed at the summary estimate level for all tank closure activities.

Estimating notes:(including identification of environmental/productivity factors):

1. Provide full time field engineer support with support from engineering office for preparation of ECNs, construction interface, and vendor interface. The support from the engineering office is assumed to be equivalent to one engineer working full time. Construction period assumed to be from 7/01/04 to 12/20/04

6.0 Resource Requirements:

Act.#	Activity Description	Res Code	Res Type	FY	Note #	Bud.Qty	BQ Rate	Factors	$
63601	Provide Engineering Support	LE13E	Engineer	2005	1	2080	64.34	0%	133,827
									$0
									$0
									$0
									$0
									$0
									$0
									$0
									$0
									$0
									$0
									$0
									$0
									$0
									$0
									$0
									$0
									$0
									$0
									$0
								WBS Estimate Total	133,827

9/12/2002 - 1:31 PM

Engineering Support During Construction (5.5.1.2.3.6.3.5) / CEISTemplate

Cost Estimating Input Sheet

Page 1 of 1

WBS#	5.5.1.2.3.6.4.1	WBS Title:	Ops Management and Planning Support		
Prepared By: C. Henderson		Rev	0	Date:	9/12/02

Scope Description:

This work scope provides work package preparation and planning support for tank closure activities for the 241-C-200 series C farm tanks. Operations management over the duration of the tank closure activities is covered under WBS 5.5.1.2.3.5.4.1 (241-C-106 Ops Management and Planning Support) and is not duplicated here. Planning support includes JCS work package preparation for all activities conducted in and around the tank farms.

Estimating Assumptions & Exclusions :

Planning support includes the preparation of work packages for stabilizing the 200 series tanks. Dedicated planning support is assumed for the project over a duration of 5 months following completion of the initial work packages to accommodate changes and updates.
Assume that the work package is relatively complex and requires development, enhanced work planning, review and approval, and closeout. The estimated cost for preparation of a complex work package is $23K and does not include ECN or USQ preparation (these are estimated elsewhere).

Basis of Estimate:

Estimate is based on engineering judgment.

Contingency: Level of Confidence/Risks Identification

Contingency is addressed at the summary estimate level for all tank closure activities.

Estimating notes:(including identification of environmental/productivity factors):

1. Work package preparation review, approval, and closeout of a "complex" work package.
2 Labor hour estimate based on 1 FTE for a period of 5 months. 5 months x 160 hrs/month =800 hrs.
3. Labor hour estimate based on 8 months x 160 hrs/month x 1/2 time = 640 hours
4. Enhanced work package planning includes 1/2 day field walk down and 1/2 day planning session with 2 operators, two field work supervisors, 2 HPTs, 2 IH Techs, 2 Riggers, and 1 Ops Manager.

6.0 Resource Requirements:

Act. #	Activity Description	Res.Code	Res Type	FY	Note #	Bud.Qty	BQ Rate	Factors	$
64102/3	Prepare work package	21L		2004	1	23	1000.00	0%	$23,000
64102/3	Planning support	LE13E	Planner	2004/5	2	800	64.34	0%	$51,472
									$0
									$0
64102	Enhanced Work Package Planning	LM02E	Field Supv	2004	4	16	76.14	0%	$1,218
64102	Enhanced Work Package Planning	LR05B	Operators	2004	4	16	44.76	0%	$716
64102	Enhanced Work Package Planning	LT05B	HPT	2004	4	16	41.86	0%	$670
64102	Enhanced Work Package Planning	LT06B	IH Tech	2004	4	16	42.70	0%	$683
64102	Enhanced Work Package Planning	LC00B	Rigger	2004	4	16	42.90	0%	$686
64102	Enhanced Work Package Planning	LM02E	Ops Mgr	2004	4	8	76.14	0%	$609
									$0
									$0
									$0
									$0
									$0
									$0
									$0
									$0
									$0
							WBS Estimate Total		$79,055

9/12/2002 - 2:44 PM

OpsMgmtandPlanningSupport(55123641) / CEISTemplate

Cost Estimating Input Sheet

WBS#	5.5.1.2.3.6.4.2	WBS Title:	Construction Support		
Prepared By: C Henderson			Rev #	0	Date: 9/12/02

Scope Description:

This work scope provides for operations support during tank farm preparation work prior to placement of fill into the 241-200 series C Farm tanks. It is assumed that the preparation work would be performed by construction forces. The principal activity involves installation and testing of ventilation systems to the tanks.

Estimating Assumptions & Exclusions :

It is assumed that operations support will be required during construction activities will include 2 Operators, 2 HPTs, 2 IH techs, 1 Radcon Eng, and 1 clerk.

Basis of Estimate:

Estimate is based on current tank farm operating requirements. A factor of 50% is applied for SWP work and a factor of 30% is applied to delays in field activities caused by inclement weather (factor=1.5*1.3 = 1.95).

Contingency: Level of Confidence/Risks Identification

Contingency is addressed at the summary estimate level for all tank closure activities.

Estimating notes:(Including identification of environmental/productivity factors):

1. Labor estimate is based on dedicated support for a period of 10 days.
2. Labor estimate is based on 1/2 time support for a period of 10 days.

6.0 Resource Requirements:

Act. #	Activity Description	Res Code	Res Type	FY	Note #	Bud.Qty	BQ Rate	Factors	$
64201	Operations Support during Const.	LR05B	Operators (2)	2004	1	80	44.76	195%	$6,983
64201	Operations Support during Const.	LT05B	HPTs (2)	2004	1	80	41.86	195%	$6,530
64201	Operations Support during Const.	LT06B	IH Tech (2)	2004	1	80	42.70	195%	$6,661
64201	Operations Support during Const.	LE13E	Radcon Eng	2004	2	40	64.34	0%	$2,574
64201	Operations Support during Const.	LG02N	Clerk	2004	1	80	23.16	195%	$3,613
									$0
									$0
									$0
									$0
									$0
									$0
									$0
									$0
									$0
									$0
									$0
									$0
									$0
									$0
								WBS Estimate Total	$26,360

9/12/2002 - 2:45 PM

ConstructionSupport (65123642) / CEISTemplate

Cost Estimating Input Sheet

WBS#	5.5.1.2.3.5.4.3	WBS Title:	Operations Training		
Prepared By: C. Henderson			Rev #	0	Date: 9/12/02

Scope Description:

This work scope provides for training of the operations staff supporting the tank closure activities. Training materials will be prepared to provide an overview of the project, objectives of the heel stabilization and tank fill steps, and the grout delivery/production system.

Estimating Assumptions & Exclusions :

Training materials will be prepared by 2 professional staff over a period of 2 weeks.
Training will be conducted in a 1 day training session that includes 4 times the standard operations support crew to accommodate the potential for multiple shifts and absences.

Basis of Estimate:

Estimate is based on engineering judgment. It is assumed that training would not include mock up and cold testing. No factors are applied to this work as it is not performed in the field.

Contingency: Level of Confidence/Risks Identification

Contingency is addressed at the summary estimate level for all tank closure activities.

Estimating notes:(including identification of environmental/productivity factors):

1. Estimate based on 2 professional staff * 40 hrs/week * 2 weeks = 160 hrs
2. Estimate based on 2 professional staff * 8 hrs/day * 2 days = 32 hrs
3. Estimate based on 8 operators * 8 hrs/day * 2 days = 128 hrs
4. Estimate based on 8 HPTs * 8 hrs/day * 2 days = 128 hrs
5. Estimate based on 8 IH techs * 8 hrs/day * 2 days = 128 hrs
6. Estimate based on 2 radcon eng * 8 hrs/day * 2 days = 32 hrs
7. Estimate based on 2 operation managers * 8 hrs/day * 2 days = 32 hrs
8. Estimate based on 2 radcon managers * 8 hrs/day * 2 days = 32 hrs
9. Training materials estimated at 30 students x $200/student = $6,000

6.0 Resource Requirements:

Act. #	Activity Description	Res Code	Res Type	FY	Note #	Bud.Qty	BQ Rate	Factors	$
54301	Prepare training materials	LP00E	Professional	2004	1	160	47.30	0%	$7,568
54301	Conduct training	LP00E	Professional	2004	2	32	47.30	0%	$1,514
54301	Attend training	LR05B	Operators	2004	3	128	44.76	0%	$5,729
54301	Attend training	LT05B	HPTs	2004	4	128	41.86	0%	$5,358
54301	Attend training	LT06B	IH Techs	2004	5	128	42.70	0%	$5,466
54301	Attend training	LE13E	Radcon Eng	2004	6	32	64.34	0%	$2,059
54301	Attend training	LM02E	Ops Manager	2004	7	32	76.14	0%	$2,436
54301	Attend training	LM02E	Radcon Mgr	2004	8	32	76.14	0%	$2,436
54301	Training Materials	21L	Training Matl.	2004	9	6	1000.00	0%	$6,000
									$0
									$0
									$0
									$0
									$0
									$0
									$0
									$0
									$0
									$0
									$0
						WBS Estimate Total			$38,566

9/12/2002 - 3:22 PM

OperationsTraining(55123543) / CEISTemplate

Cost Estimating Input Sheet

WBS#	5.5.1.2.3.6.4.4	WBS Title:	Stabilize Heel - 241-C-200s		
Prepared By:	C. Henderson	Rev #	0	Date: 9/12/02	

Scope Description:

This activity involves placement of the grout material into the 241-200 series tanks to stabilize the residual waste heel. The grout will be prepared outside the tank farm by a subcontractor and pumped to the tank through slicklines (pipe or hose). During grouting operations the operations crew will monitor in tank conditions, monitor the grout line and tank ventilation system, and access the central pump pit as required to remove and install grout tremie lines (flex hose) used to pump grout into the tank. This activity also includes video surveillance of the waste stabilization within the tank.

Estimating Assumptions & Exclusions:

It is assumed that separate crews will be utilized to provide for longer grout operating shifts. Once the grout plant is operating it is beneficial to run for longer durations to minimize cleanup and secondary waste generation. The camera crew consists of 4 operators, 1 field work supervisor, 2 craft, 1 HPT, and 1 IH tech. It is assumed that the entire waste stabilization effort will be videotaped. The operations crew to support grout placement consists of 1 field work supervisor, 2 operators and 1 HPT to verify integrity of the grout line and perform routine surveillance on the exhauster.

Basis of Estimate:

Engineering judgment. This is a first of a kind activity. A factor of 50% is applied for SWP and a factor of 30% is applied to account for field delays due to inclement weather (factor = 1.5*1.3=1.95).

Contingency: Level of Confidence/Risks Identification

Contingency is addressed at the summary estimate level for all tank closure activities.

Estimating notes:(including identification of environmental/productivity factors):

1. Labor estimate is based on dedicated support from 2 operators x 2 shifts x 2 days/tank x 4 tanks x 8 hrs/day = 256 hrs
2. Labor estimate is based on dedicated support from 1 HPT/shift x 2 shifts x 2 days/tank x 4 tanks x 8 hrs/day = 128 hrs.
3. Labor estimate is based on dedicated support from 1 IH tech/shift x 2 shifts x 2 days/tank x 4 tanks x 8 hrs/day = 128 hrs
4. Labor estimate is based on 4 operators x 2 shifts x 2 days/tank x 4 tanks x 8 hrs/day = 512 hrs
5. Labor estimate is based on 1 field work supervisor x 2 shifts x 2 days/tank x 4 tanks x 8 hrs/day = 128 hrs
6. Labor estimate is based on 2 craft (fitter/instrument tech) x 2 shifts x 2 days/tank x 4 tanks x 8 hrs/day = 256 hrs
7. Labor estimate is based on 1 HPT x 2 shifts x 2 days/tank x 4 tanks x 8 hrs/day = 128 hrs
8. Labor estimate is based on 1 IH tech x 2 shifts x 2 days/tank x 4 tanks x 8 hrs/day = 128 hrs

6.0 Resource Requirements:

Act. #	Activity Description	Res Code	Res Type	FY	Note #	Bud.Qty	BQ Rate	Factors	$
64401	Waste heel stabilization	LR05B	Operators	2004/5	1	256	44.76	195%	$22,344
64401	Waste heel stabilization	LT05B	HPTs	2004/5	2	128	41.86	195%	$10,448
64401	Waste heel stabilization	LM02E	Field Supv	2004/5	3	128	76.14	195%	$19,005
									$0
64402	In tank video stabilization	LR05B	Operators		4	512	44.76	195%	$44,688
64402	In tank video stabilization	LM02E	Field Supv		5	128	76.14	195%	$19,005
64402	In tank video stabilization		Craft		6	256	44.76	195%	$22,344
64402	In tank video stabilization	LT05B	HPT		7	128	41.86	195%	$10,448
64402	In tank video stabilization	LT06B	IH Tech		8	128	42.70	195%	$10,658
									$0
									$0
									$0
									$0
									$0
									$0
									$0
									$0
									$0
									$0
									$0
							WBS Estimate Total		$158,940

9/12/2002 - 2:47 PM StabilizeHeel(55123644) / CEISTemplate

Cost Estimating Input Sheet

Page 1 of 1

WBS#	5.5.1.2.3.6.4.5	WBS Title:	In Tank Equipment Stabilization - 241-C-200		
Prepared By: C. Henderson		Rev #	0	Date: 9/12/02	

Scope Description:

This activity involves the stabilization of in tank equipment with grout. Following stabilization of the waste heel and bulk tank stabilization, in tank equipment will be stabilized. In tank equipment stabilization will involve pit entry, disassembly and/or cutting equipment and filling equipment to the extent possible using a hand held grout line. Cover blocks and plates will be removed as necessary to gain access to in-tank equipment.

Estimating Assumptions & Exclusions:

A relatively large crew size will be required to stabilize in tank equipment. The crew size consists of 5 operators, 1 field work supervisor, 2 HPTs, 1 IH tech, 2 fitters, and 2 electricians. It is conservatively assumed that stabilization of equipment will be done on mask. A camera crew will be utilized to video equipment stabilization activities. The camera crew consists of 4 operators, 1 field work supervisor, 2 craft, 1 HPT, and 1 IH tech. A crane crew will be used to remove cover blocks and cover plates. It is assumed that the cost for coverblock/coverplate removal is $10K (2 days of a crane crew of 9).

Basis of Estimate:

Estimate is based on engineering judgment for first of a kind activity. A factor 30% is applied to account for weather and a factor of 100% is applied for mask work. Factor = 1.3*2 = 2.6.

Contingency: Level of Confidence/Risks Identification

Contingency is addressed at the summary estimate level for all tank closure activities

Due to the configuration of in tank equipment, there are a number of void spaces between the in tank equipment and the risers that will require further evaluation during detailed design. It is assumed that the resources estimated for stabilizing the in tank equipment include grouting

these small void spaces however, further evaluation may find grouting these void spaces requires additional resources or alternative

Estimating notes:(including identification of environmental/productivity factors):

1. Labor hours are estimated based on the crew size identified in the assumptions sections, 2 shifts/day, and a duration of 3 days/200 series tank.
Operators = 3 days/tank x 4 tanks x 5 operators x 2 shifts x 8 hrs/day = 960 hrs
Field work supervisor = 3 days/tank x 4 tanks x 1 supv x 2 shifts x 8 hrs/day = 192 hrs
HPTs = 3 days/tank x 4 tanks x 2 HPTs x 2 shifts x 8 hrs/day = 384 hrs
IH tech = 3 days/tank x 4 tanks x 1 IH tech x 2 shifts x 8 hrs/day = 192 hrs
Fitters = 3 days/tank x 4 tanks x 2 fitters x 2 shifts x 8 hrs/day = 384 hrs
Electricians = 3 days/tank x 4 tanks x 2 electricians x 2 shifts x 8 hrs/day = 384 hrs
2. Labor hours are estimated for the camera crew size identified in the assumptions and single shift coverage for a duration of 3 days/tank x 4 tanks at one shift per day.
3. Each tank has 1 cover block/plate that will require removal to facilitate in-tank equipment stabilization. $10K x 1.3 (weather allowance) x 4 tanks = $54K.

6.0 Resource Requirements:

Act. #	Activity Description	Res Code	Res Type	FY	Note #	Bud.Qty	BC Rate	Factors	$
64501	Stabilize in tank equipment w/grout	LR05B	Operators	FY04	1	960	44.76	260%	$111,721
64501	Stabilize in tank equipment w/grout	LM02E	Field Supv	FY04	1	192	76.14	260%	$38,009
64501	Stabilize in tank equipment w/grout	LT05B	HPTs	FY04	1	384	41.86	260%	$41,793
64501	Stabilize in tank equipment w/grout	LT06B	IH Tech	FY04	1	192	42.70	260%	$21,316
64501	Stabilize in tank equipment w/grout		Fitters	FY04	1	384	42.90	260%	$42,831
64501	Stabilize in tank equipment w/grout		Electricians	FY04	1	384	42.90	260%	$42,831
64501	Cover plate/block removal	21L		FY04	3	54	1000	0%	$54,000
64502	video equipment stabilization	LR05B	Operators	FY04	2	384	44.76	260%	$44,688
64502	video equipment stabilization	LM02E	Field Supv	FY04	2	96	76.14	260%	$19,005
64502	video equipment stabilization		Craft	FY04	2	192	42.90	260%	$21,416
64502	video equipment stabilization	LT05B	HPT	FY04	2	96	41.86	260%	$10,448
64502	video equipment stabilization	LT06B	IH Tech	FY04	2	96	42.70	260%	$10,658
									$0
									$0
									$0
									$0
									$0
									$0
									$0
									$0
						WBS Estimate Total			$458,716

9/12/2002 - 2:47 PM

In-TankEquipStabilization(55123645) / CEISTemplate

Cost Estimating Input Sheet

Page 1 of 1

WBS#	5.5.1.2.3.6.4.6	WBS Title:	Bulk Fill Tank 241-C-200s		
Prepared By: C. Henderson			Rev #	0	Date: 9/12/02

Scope Description:

This activity involves the bulk filling of the four 241-200 series C farm tanks with grout to provide for long term stabilization of the tank structure. The grout will be prepared outside the tank farm fence line by a subcontractor and pumped into the farm and into the tank through a slickline (grout pipe/hose). During grouting operations the operations crew will monitor in tank conditions, monitor the grout line and the ventilation system. Periodic video surveillance of the tank fill operation will be performed by a camera crew.

Estimating Assumptions & Exclusions:

It is assumed that separate crews will be utilized to provide for longer grout operating shifts. Once the grout plant is in operation it is beneficial to run for longer durations to minimize cleanup times and secondary waste generation. The operations crew supporting the grouting operation consists of a field work supervisor, 2 operators, and 1 HPT. The camera crew consists of 4 operators, 1 field work supervisor, 2 craft, 1 HPT, and 1 IH tech. It is assumed that camera crew coverage of the bulk fill operation can be reduced to approximately 1/2 time. Assumes that the 241-200 series tanks can be filled with a single grout lift. Assumption to be validated during detail design.

Basis of Estimate:

Engineering judgment

Contingency: Level of Confidence/Risks Identification

Contingency is addressed at the summary estimate level for all tank closure actions.

Estimating notes:(Including identification of environmental/productivity factors):

1. Labor estimate is based on dedicated support from 2 operators x 2 shifts x 1 day/tank x 4 tanks x 8 hrs/day = 128 hrs
2. Labor estimate is based on dedicated support from 1 HPT x 2 shifts x 1 day/tank x 4 tanks x 8 hrs/day =64 hrs
3. Labor estimate is based on dedicated support from 1 field work supervisor x 2 shifts x1 day/tank x 4 tanks x 8 hrs/day = 64 hrs
4. Labor estimate is based on periodic video taping 1 shift/day; 1 day/tank x 4 tanks x 4 operators x 1 shift x 8 hrs/day = 128 hrs
5. Labor estimate is based on periodic video taping 1 day/tank x 4 tanks x 1 field work supervisor x 1 shift x 8 hrs = 32 hrs
6. Labor estimate is based on periodic video taping 1 day/tank x 4 tanks x 2 craft x 1 shift x 8 hrs =64 hrs
7. Labor estimate is based on periodic video taping 1 day/tank x 4 tanks x 1 HPT x 1 shift x 8 hrs = 32 hrs
8. Labor estimate is based on periodic video taping 1 day/tank x 4 tanks x 1 IH tech x 1 shift x 8 hrs = 32 hrs

6.0 Resource Requirements:

Act. #	Activity Description	Res Code	Res Type	FY	Note #	Bud.Qty	BQ Rate	Factors	$
64601	Bulk Fill tank	LR05B	Operator	FY04	1	144	44.76	195%	$12,569
64601	Bulk Fill tank	LT05B	HPT	FY04	2	72	41.86	195%	$5,877
64601	Bulk Fill tank	LM02E	Field Supv	FY04	3	72	76.14	195%	$10,690
									$0
64602	Video bulk tank fill	LR05B	Operators	FY04	4	144	44.76	195%	$12,569
64602	Video bulk tank fill	LM02E	Field Supv	FY04	5	36	76.14	195%	$5,345
64602	Video bulk tank fill		Craft	FY04	6	72	44.76	195%	$6,284
64602	Video bulk tank fill	LT05B	HPT	FY04	7	36	41.86	195%	$2,939
64602	Video bulk tank fill	LT06B	IH Tech	FY04	8	36	42.70	195%	$2,998
									$0
									$0
									$0
									$0
									$0
									$0
									$0
									$0
									$0
									$0
									$0
						WBS Estimate Total			$59,270

9/12/2002 - 3:27 PM BulkFillTank(55123646) / CEISTemplate

Cost Estimating Input Sheet

WBS#	5.5.1.2.3.5.4.7	WBS Title:	Tank Riser Fill/Stabilization 241-C-200
Prepared By: C. Henderson		Rev.#	0 Date: 9/12/02

Scope Description:

This activity involves the stabilization of the 241-200 series tank risers with grout. Following bulk fill of the tank, the tank risers will be filled with grout using a hand held grout line.

Estimating Assumptions & Exclusions :

A relatively large crew size will be required to complete tank riser fill/stabilization. The crew size consists of 5 operators, 1 field work supervisor, 2 HPTs and 1 IH tech. It is conservatively assumed that tank riser fill/stabilization will be on mask since the tank ventilation system will be shut down following bulk tank fill. No video taping of the riser fill/stabilization activities is assumed.

Basis of Estimate:

Estimate is based on engineering judgment for first of a kind activity. A factor of 50% is applied for SWP, a factor of 30% is applied for weather, and a factor of 100% is applied for mask work. Factor = 1.3 x 2= 2.6

Contingency: Level of Confidence/Risks Identification

Contingency is addressed at the summary estimate level for all tank closure activities.

Estimating notes:(including identification of environmental/productivity factors):

1. Labor estimate is based on 1 day/tank x 4 tanks x 5 operators/shift x 2 shifts x 8 hrs/day = 320 hrs
2. Labor estimate is based on 1 day/tank x4 tanks x 1 field work supervisor/shift x 2 shifts x 8 hrs = 64 hrs
3. Labor estimate is based on dedicated staff for 1 day/tank x 4 tanks x 2 HPTs /shift x 2 shifts x 8 hrs/day = 128 hrs
4. Labor estimate is based on dedicated staff for 1 day/tank x 4 tanks x1 IH tech/shift x 2 shifts x 8 hrs/day = 64 hrs

6.0 Resource Requirements:

Act. #	Activity Description	Res Code	Res Type	FY	Note #	Bud.Qty	BQ Rate	Factors	$
64701	Fill/Stabilize tank risers with grout	LR05B	Operators	FY04	1	360	44.76	260%	$41,895
64701	Fill/Stabilize tank risers with grout	LM02E	Field Supv	FY04	2	72	76.14	260%	$14,253
64701	Fill/Stabilize tank risers with grout	LT05B	HPT	FY04	3	144	41.86	260%	$15,672
64701	Fill/Stabilize tank risers with grout	LT06B	IH tech	FY04	4	72	42.70	260%	$7,993
									$0
									$0
									$0
									$0
									$0
									$0
									$0
									$0
									$0
									$0
									$0
									$0
									$0
									$0
									$0
									$0
								WBS Estimate Total	$79,815

9/12/2002 - 2:49 PM

Tank Riser Fill/Stabilization (55123647) / CEISTemplate

Cost Estimating Input Sheet

Page 1 of 1

WBS#	5.6.1.2.3.6.4.8	WBS Title:	Tank Farm Surface Restoration and Demob		
Prepared By: C Henderson			Rev #	0	Date: 9/12/02

Scope Description:

This activity involves providing intrusion/isolation measures for the tank following stabilization to prevent exposure of the risers to rain water, removal/relocation of equipment used to stabilize the tank, and general housekeeping of the tank farm area.

Estimating Assumptions & Exclusions :

It is assumed that weather sealing of the risers for all four of the 241-200 series tanks is a 2 day effort and general cleanup/housekeeping and demobilization is a 3 day effort.

Basis of Estimate:

Estimate is based on engineering judgment. A factor of 50% is applied for SWP and a factor of 30% is applied to account for weather. Factor = 1.5*1.3= 1.95= 195%

Contingency: Level of Confidence/Risks Identification

Contingency is addressed at the summary estimate level for all tank closure activities

Estimating notes:(including identification of environmental/productivity factors):

1. Labor estimate is based on 2 operators for a period of 5 days. (2 operators x 5 days x 8 hrs/day)
2. Labor estimate is based on 1 field work supervisor for a period of 5 days (1 supv x 5 days x 8 hrs/day)
3. Labor estimate is based on 1 HPT for a period of 5 days
4. Labor estimate is based on 1 IH tech for a period of 5 days
5. ROM estimate for disposal of miscellaneous materials (grout lines, cover plates, etc) used in the tank closure operation. Assume 1 4'x4'x8' disposal container per tank. Assume LLMW at $ 113.87/cubic foot. Disposal cost per box = $14,500.
6. A 4' x 4' x 8' burial box costs approximately $13.8 K
7. Transportation costs are assumed at $1K/shipment.

6.0 Resource Requirements:

Act. #	Activity Description	Res Code	Res Type	FY	Note #	Bud Qty	BQ Rate	Factors	$
64801	weather seal risers/housekeeping	LR05B	Operators	FY04	1	80	44.76	95%	$6,983
64801	weather seal risers/housekeeping	LM02E	Field Supv	FY04	2	40	76.14	95%	$5,939
64801	weather seal risers/housekeeping	LT05B	HPT	FY04	3	40	41.86	95%	$3,265
64801	weather seal risers/housekeeping	LT06B	IH tech	FY04	4	40	42.70	95%	$3,331
64801	waste disposal fee	21L	disposal	FY04	5	58	1000.00	0%	$58,000
64801	disposal boxes	21L	material	FY04	6	55.2	1000.00	0%	$55,200
64801	transport disposal boxes	21L	transportation	FY04	7	4	1000.00	0%	$4,000
									$0
									$0
									$0
									$0
									$0
									$0
									$0
									$0
									$0
									$0
									$0
									$0
									$0
							WBS Estimate Total		$136,717

9/12/2002 - 1:51 PM

RestoreandDemob(55123648) / CEISTemplate

Cost Estimating Input Sheet

WBS#	5.5.1.2.3.7.1	WBS Title:	Final As-Built Drawings		
Prepared By: C Henderson		Rev #	0	Date: 9/12/02	

Scope Description:

This activity provides for modifying the design drawings as necessary to reflect the final configuration of the tanks following closure.

Estimating Assumptions & Exclusions :

It is assumed that 10 moderately complex ECNs and 5 simple ECNs will be required to document the as built condition of the tanks following closure.

Basis of Estimate:

Engineering judgment. A moderately complex ECN requires 80 hours to complete. A simple ECN requires 60 hours to complete.

Contingency: Level of Confidence/Risks Identification

Contingency is addressed at the summary estimate level for all tank closure activities.

Estimating notes:(including identification of environmental/productivity factors):

1. 10 Moderately complex ECNs x 80 hrs/ECN = 800 hours and 5 simple ECNs x 60 hrs/ECN = 300 hours (total = 1,100 hours)

6.0 Resource Requirements:

Act. #	Activity Description	Res Code	Res Type	FY	Note #	Bud.Qty	BQ Rate	Factors	$
7101	As built	LE13E	Engineer	2005	1	1100	64.34	0%	$70,774
									$0
									$0
									$0
									$0
									$0
									$0
									$0
									$0
									$0
									$0
									$0
									$0
									$0
									$0
									$0
									$0
									$0
									$0
									$0
									$0
								WBS Estimate Total	70774

9/12/2002 - 1:54 PM

Final asbuilt drawings (5.5.1.2.3.7.1) / CEISTemplate

Cost Estimating Input Sheet

WBS#	5.5.1.2.3.7.2	WBS Title:	Modify Relevant Documents	
Prepared By: C. Henderson		Rev #	0	Date: 9/12/02

Scope Description:

This activity provides for modifying existing documents to the extent necessary to reflect the change in status/ configuration of the 5 demonstration tanks following closure.

Estimating Assumptions & Exclusions :

Assume that there are 10 documents that will warrant revision following tank closure. Document changes are assumed to require an average of 40 hours/document plus technical editing.

Basis of Estimate:

Engineering judgment

Contingency: Level of Confidence/Risks Identification

Contingency is addressed at the summary estimate level for all tank closure activities.

Estimating notes:(including identification of environmental/productivity factors):

1. Labor estimate is based on 10 documents x 40 hrs/document
2. Labor estimate is based on 10 documents x 16 hrs/document

6.0 Resource Requirements:

Act. #	Activity Description	Res Code	Res Type	FY	Note #	Bud Qty	BQ Rate	Factors	$
7201	Revise documents	LE13E	Eng	2005	1	400	64.34	0%	$25,736
7201	Revise documents	LP00E	Tech Editor	2005	2	160	47.30	0%	$7,568
7201	Revise documents	LG02N	Word Proc.	2005	2	160	23.16	0%	$3,706
									$0
									$0
									$0
									$0
									$0
									$0
									$0
									$0
									$0
									$0
									$0
									$0
									$0
									$0
									$0
									$0
									$0
									$0
							WBS Estimate Total		$37,010

9/12/2002 - 1:55 PM

ModifyRelevantDocuments(5.5.1.2.3.7.2) / CEISTemplate

Cost Estimating Input Sheet

WBS#	5.5.1.2.3.7.3	WBS Title:	Lessons Learned		
Prepared By: C Henderson			Rev #	0	Date: 9/12/02

Scope Description:

This activity provides for collecting and documenting lessons learned from the Accelerated Tank Closure Demonstration

Estimating Assumptions & Exclusions :

It is assumed that lessons learned will be collected in a 1 day working session with representatives from the involved organizations.

Basis of Estimate:

Engineering judgment.

Contingency: Level of Confidence/Risks Identification

Contingency is addressed at the summary estimate level for all tank closure activities.

Estimating notes:(including identification of environmental/productivity factors):

1. Assume a 2 day working session.
2. Prepare a lessons learned report.
3. Lessons learned report document production
4. Lessons learned report review and approval.

6.0 Resource Requirements:

Act. #	Activity Description	Res Code	Res Type	FY	Note #	Bud.Qty	BQ Rate	Factors	$
7301	Lessons learned workshop		Operator	2005	1	16	44.76	0%	$716
7301	Lessons learned workshop		Operator	2005	1	16	44.76	0%	$716
7301	Lessons learned workshop		HPT	2005	1	16	41.86	0%	$670
7301	Lessons learned workshop		IH tech	2005	1	16	42.70	0%	$683
7301	Lessons learned workshop		Field Supv	2005	1	16	76.14	0%	$1,218
7301	Lessons learned workshop		Ops Manager	2005	1	16	76.14	0%	$1,218
7301	Lessons learned workshop		Sys Eng	2005	1	16	64.34	0%	$1,029
7301	Lessons learned workshop		Rad Con Eng	2005	1	16	64.34	0%	$1,029
7301	Lessons learned workshop		Clerk	2005	1	16	23.16	0%	$371
7301	Lessons learned workshop		QA	2005	1	16	47.30	0%	$757
									$0
7301	Prepare Lessons Learned Doc		Eng	2005	2	80	64.34	0%	$5,147
7301	Prepare Lessons Learned Doc		Tech Edit	2005	3	32	47.30	0%	$1,514
7301	Prepare Lessons Learned Doc		Clerk	2005	3	32	23.16	0%	$741
7301	Review /Approve Document		Manager	2005	4	24	76.14	0%	$1,827
									$0
									$0
									$0
									$0
									$0
							WBS Estimate Total		$17,637

9/12/2002 - 1:57 PM

LessonsLearned (5.5.1.2.3.7.3) / CEISTemplate

Cost Estimating Input Sheet

WBS#	5.5.1.2.3.8.1	WBS Title:	Environmental Permitting		
Prepared By: C Henderson			Rev #	0	Date: 9/12/02

Scope Description:

This activity involves the preparation, review, and approval of the Notice of Construction permits required to close the demonstration tanks. This activity is assumed to require a complex NOC and subsequently has a higher cost than routine NOCs. It is assumed that both radiological and nonradiological NOCs will be required. The NOC process includes: 1) gather NOC data, 2)prepare draft NOC, 3)conduct internal CHG NOC review, 4) conduct ORP/Regulatory NOC review, 5) negotiate NOC, 6) provide regulatory NOC approval, and 7) implement NOC.

Estimating Assumptions & Exclusions:

Sample analyses, source term, and process data is either not available or requires significant manipulation to support NOC development.
Significant technical unknowns or other significant risks impacting the potential to emit may be identified

Basis of Estimate:

Estimate is developed from an NOC CEIS template developed by the CHG environmental and permitting group for preparation of a "complex" NOC.

Contingency: Level of Confidence/Risks Identification

Estimating notes:(including identification of environmental/productivity factors):

A single composite hour estimate of 512 hrs was summarized from historical CEIS data for preparation of a complex NOC.

6.0 Resource Requirements:

Act. #	Activity Description	Res Code	Res Type	FY	Note #	Bud.Qty	BQ Rate	Factors	$
8101-3	Develop/implement NOCs	LE13E	Env Engineer	2004	1	512	64.34	0%	$32,942
									$0
									$0
									$0
									$0
									$0
									$0
									$0
									$0
									$0
									$0
									$0
									$0
									$0
									$0
									$0
									$0
									$0
									$0
									$0
									$0
								WBS Estimate Total	$32,942

9/12/2002 - 1:58 PM

Environmental and Permitting (5.5.1.2.3.8.1) / CEISTemplate

Cost Estimating Input Sheet

WBS#	5.5.1.2.3.8.2	WBS Title:	System Engineering Support		
Prepared By: C Henderson		Rev #	0	Date: 9/12/02	

Scope Description:

This activity provides for tank farm engineering support during grout operations to prepare ECNs and process changes if/as required.

Estimating Assumptions & Exclusions :

The equivalent of one tank farm system engineer will support grout placement operations.

Basis of Estimate:

Engineering judgment

Contingency: Level of Confidence/Risks Identification

Contingency is addressed at the summary estimate level for all tank closure activities.

Estimating notes:(including identification of environmental/productivity factors):

1. The labor hour estimate is for the equivalent of 1 FTE to provide tank farm system engineering support to the tank closure project.

6.0 Resource Requirements:

Act. #	Activity Description	Res Code	Res Type	FY	Note #	Bud.Qty	BQ Rate	Factors	$
8201	Plant Eng Support	LE13E	Engineer	2004	1	1800	64.34	0%	$115,812
									$0
									$0
									$0
									$0
									$0
									$0
									$0
									$0
									$0
									$0
									$0
									$0
									$0
									$0
									$0
									$0
									$0
									$0
									$0
								WBS Estimate Total	$115,812

9/12/2002 - 2:00 PM

System Engineering Support (5.5.1.3.8.2)/ CEISTemplate

COST ESTIMATING INPUT SUPPORTING INFORMATION

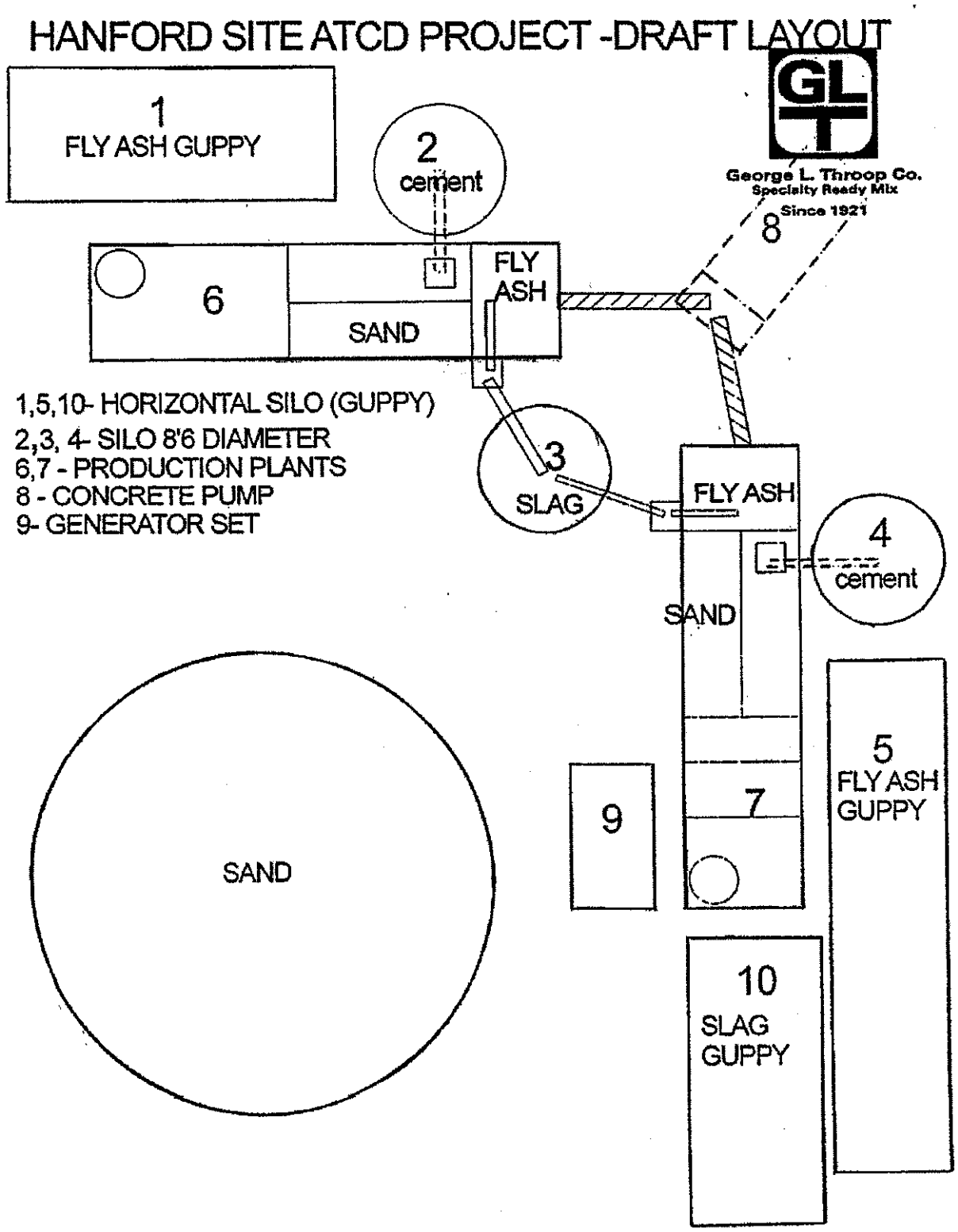

George L. Throop Co.
Specialty Ready Mix
Since 1921

31-Aug-02

TANK C-106 3950 CUBIC YARDS

MATERIALS				475,000.00
EQUIPMENT	MONTH			
2 PLANTS	40000			
3 SILOS	5000			
1 LOADER	8500			
3 GUPPIES	7500			
1 GEN SET	3000			
1 CON PUMP	8000			
1 EQUIP TRAILER	2500			
	74500 2MONTHS			149000
1000 FT. CON SYSTEM	15000 PURCHASE			15000
TRANSPORTATION				
CAR RENTAL			9000	
AIRLINE TICS			12000	
			21000	21000
PERSONELL				
8 STAFF - 175 HOURS EACH 30.00 HR			84000	
ROOMS-MEALS			28,500	
SITE REQUIRED TRAINING			5000	
			117,500	117,500
MISCELLANEOUS				
ENGINEERING- SILO		6500		
HEALTH -SAFETY PLAN		5000		
MISCELLANEOUS		18000		
		29500		29500
MOBILIZATION-FROM OUT OF STATE				
2 PLANTS		12,000		
3 SILOS		18,000		
1 CON PUMP		6,000		
1 EQUIPMENT TRAILER		6,000		
LABOR -5-FOR 1WEEK		6000		
		48,000		48000
MOBILIZATION FROM IN WASHINGTON				
1 LOADER		1800		
1 GEN SET		1500		
3 GUPPIES		6000		
CRANE		1800		
		11100		11100
				866,100.00

P.O. Box 92405
444 N. Fair Oaks Ave.,
Pasadena, CA 91109-2405
Tel: (800) 796-0285
Fax: (626) 577-0023
www.throop.com

George L. Throop Co.
Specialty Ready Mix
Since 1921

4-EACH C-200 TANKS 1200 CUBIC YARDS TOTAL

MATERIALS				144,000
EQUIPMENT	MONTH			
1 PLANT	20000	2-MON	40000	
2 SILOS	3000	9-MON.	27000	
1 LOADER	8500	2-MON	17000	
2 GUPPIES	6000	2-MON	12000	
1 GEN SET	3500	2-MON	7000	
1 CON PUMP	8000	2-MON	16000	
1 EQUIPMENT TRAILER	2500	9-MON.	22500	
	51500		141500	141500
TRANSPORTATION				
CAR RENTAL			9000	
AIRLINE TICS			10000	
			19000	19000
PERSONELL				
6 STAFF - 175 HOURS EACH 30.00 HR.			63000	
ROOMS-MEALS			22,500	
			85500	85500
OPTION TO PRODUCE DURING FREEZING TIME OF YEAR				
EQUIP-PREVENT FREEZING		38000		38000
LABOR TO MONITOR EQUIPMENT		15000		15000
REMOBILIZATION FOR 2ND PHASE				
1 PLANT		6,000		
1 LOADER		1800		
1 CON PUMP		6,000		
1 GEN SET		1500		
2 GUPPIES		4000		
LABOR -5-FOR 1WEEK		6000		
		25,300		25,300
				468,300

George L. Throop Co.
Specialty Ready Mix
Since 1921

P.O. Box 92405
444 N. Fair Oaks Ave.,
Pasadena, CA 91109-2405
Tel: (800) 796-0285
Fax: (626) 577-0023
www.throop.com

HANFORD SITE ATCD PROJECT

REVISED AUG. 31, 2002

TANK C-106 - 3950 CUBIC YARDS ONE TANK ONLY 2/1/04 TO 3/31/04	lbs/oz/grams per cu.yd.	PRICE PER TON	FREIGHT	PER YARD
TYPE I CEMENT	75LBS/YD	90	INC.	3.375
SLAG- GRADE 100	210LBS	250 TON	INC	30
FLY ASH/ TYPE F	375LBS	42	30	13.5
SAND C-33	2300LBS	9 TON	INC	10.35
WATER	60 GA/YD	0		
SODIUM THIOSULFA	2.1LB	.50LB.IMPORT	.36 LB.	2.65
MUST BE PUT INTO SOLUTION				
ADVAFLOW	90 OZ/YD 3656 GAL.	35	INC.	24.6
WELAN GUM	275 GR/YD	9	1.19	6.17
454GR/LB. MUST BE PUT INTO SOLUTION				
				90.645
WASHINGTON STATE SALES TAX			8.3% TAX	7.52
WASTE			5%	4.53
PROFIT			15%	13.59
				116.285

PRICING BASED ON:
CURRENT PRICES WITH NO PROJECTIONS FOR 2004
NOTHING ALLOWED FOR DISPOSAL OF LEFT OVER MATERIALS
SOME MATERIALS ARE IMPORTED, NOT AMERICAN MADE

PRIVACY & SECURITY

HANFORD SITE SOLID WASTE ACCEPTANCE PROGRAM

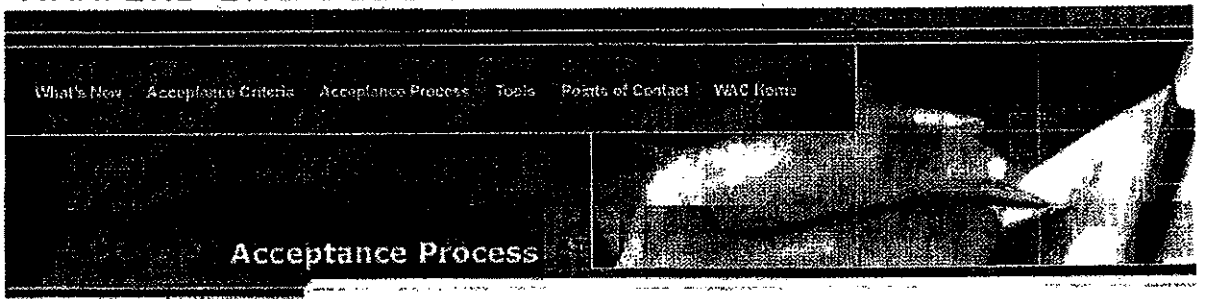

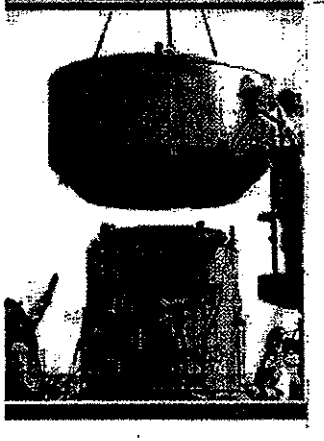

Waste Storage & Disposal Rates

The waste storage and disposal rates listed below cover the costs of acceptance review, verification at the minimum verification rate and the operational costs of waste receipt for containerized waste and small quantities of bulk waste.

Hanford offers a variety of other services, including waste treatment and disposal of large volumes of low-level bulk waste. Lower costs are possible for large volumes of bulk waste, and will be determined by a project-specific cost estimate. Contact your POC for additional information on bulk waste disposal.

Fiscal Year 2002 Rates:

Service	Rate for PHMC (Fluor Hanford) Customers per cubic foot	Rate for Non-PHMC Customers per cubic foot
LLW disposal base rate	$ 12.49	$ 14.65
Mixed low-level base rate disposal	$ 16.62	$ 19.50
Additional charge for contact handled waste requiring stabilization	$ 41.34	$ 48.50
Additional charge for remote handled waste requiring stabilization	$ 66.44	$ 77.93
Storage of low-level mixed waste	$ 97.07	$ 113.87
Storage of transuranic waste	$ 117.48	$ 137.80

-----Original Message-----
From: Alison_R_Engelman@RL.gov [mailto:Alison_R_Engelman@RL.gov]
Sent: Monday, August 26, 2002 11:53 AM
To: chenderson@columbia-energy.com
Subject: RE: burial boxes

Data source: FH Waste Programs - J Lang.

-4X4X8 Burial box = $13,800 = 128 CF w/skid = 142 CF

-FH Rates - just faxed to you - LLMW storage rate of $113.87 - should be used unless you would know for certain that the wastes are LDR compliant, then disposal rates apply

-Transportation to the disposal facility is performed by the generator of the waste. The only estimate I know of is $1,000/shipment used by Retrieval Program(PS Shaus) for WTP Planning. This seems about right - i.e. 20hours for all involved

-----Original Message-----
From: Alison_R_Engelman@RL.gov [mailto:Alison_R_Engelman@RL.gov]
Sent: Friday, August 23, 2002 12:56 PM
To: chenderson@columbia-energy.com
Subject: RE: cost input sheets for review
Importance: High

Below are some 'in-process' standards being developed

500001	ECN SIMPLE	60	4526
500002	ECN MODERATE	80	6226
500003	ECN COMPLEX	100	7926
500004	USQ SIMPLE	15	965
500005	USQ MODERATE	37	2381
500006	USQ COMPLEX	68	4376
500007	DEVELOP WORK PKG SIMPLE	108	6629
500008	DEVELOP WORK PKG MOD.	140	8611
500009	DEVELOP WORK PKG COMPLEX	172	10593
500010	ENHANCED WORK PLAN SIMPLE	28	1436
500011	ENHANCED WORK PLAN MODERATE	42	2154
500012	ENHANCED WORK PLAN COMPLEX	56	2872
500013	REVIEW & APPROVE WORK PKG SIMPLE	80	4505
500014	REVIEW & APPROVE WORK PKG MODERATE	100	5631
500015	REVIEW & APPROVE WORK PKG COMPLEX	154	8647
500016	CLOSEOUT WORK PACKAGE SIMPLE	42	2403
500017	CLOSEOUT WORK PACKAGE MODERATE	54	3070
500018	CLOSEOUT WORK PACKAGE COMPLEX	68	3851

ESTIMATING RATES & FACTORS

LABOR *includes full burdens including fee:

RESOURCE	RATE/FACTOR	NOTES
Construction Forces - Field Craft Labor	$55*/ hour avg.	Average of FFS electrician/pipefitter/operator
Construction Forces – Sr. Technical	$92*/hour avg.	Construction engineering rate
A/E -Engineering	$100*/ hour senior avg.	Further detail, if known, could include $120/hr-principle; $90/hr-mid level; $70/hr jr. $45/hr administrative
CHG	CHG FY02 Rate Table	Rate Table includes rates by COCS code. Includes all burdens applicable to expense funded work.

PRODUCTIVITY FACTORS MARKUPS:

RESOURCE	RATE/FACTOR	NOTES
Special Work Procedures (SWP) work	50% of direct labor	These work activities involve tank farm entry requirements, dressing and undressing in Personal Protective Equipment (PPE, compliance with tank farm procedures and requirements, daily pre-job safety meetings, clearing work areas of contaminated materials, releasing work areas for construction work, and moving materials, tools, an equipment in and out of the tank farms.
Mask work	100% of direct labor	For work with PPE and respirator. Includes SWP.
Weather - field work	Up to 30% of direct labor (including SWP)	Based on weather statistics. Average number of days above 90 degrees and below freezing = 158 days. Assume efficiency drops to 50% during these times.

MARKUPS :

RESOURCE	RATE/FACTOR	NOTES
Sales Tax	8.3%	Applied to all materials and equipment purchases
Consumables	4% of CF labor (including SWP)	Applied to direct construction hours for small tools, gloves, tape, caulk, plastics, and misc. throw away items
CF Construction Management	20%	Applied to the direct contract value to pay for bid package preparation, contract management & administration, and project management & planning & control support, and quality

		assurance
CF Material Adders	25%	Applied and CF procured materials and subcontracts for G&A and profit
Procurements	3%	Applied to procurement cost to account for direct buyer support/RFP approval cycle
General Conditions	20% of CF labor (including factors)	Includes costs for quality inspection (field quality control), cleanup following construction, personnel/material movement, new hires, and welder qualifications
Foreman/General Foreman	8% of CF labor (including factors)	Accounts for the costs of first-line, non-productive construction craft supervision.
Receiving/Inspection	10% of material and procured equipment	Includes receiving and inspection costs
Government Equipment Surcharge	5% of CF labor	This accounts for usage of government owned equipment within the light equipment pool managed by FH including sedans, van, and trucks used by construction forces.
Escalation	FY03 = 1.8%; FY04 = 2.6%	Based on DOE guidance (as of 1/02/02) for DOE Projects – O&M Cost Category. Rates compound each year.

Meeting Notes

Meeting Date – 8/21/02

Attendees: Dave Strasser (CHG) and Colin Henderson (CEES)

Subject: Discuss Planning Assumptions for Tank Closure Cost Estimates

Discussed the general approach being developed to stabilize the waste residuals and fill the tanks. With the batch plant operation the idea of providing extended coverage to support 8 to 10 hour grout delivery durations. This could be covered with overtime or by assuming 2 shifts for the tank farm operations support.

A camera crew consists of 3-5 operators, 1 field work supervisor, 2 craft (fitter/instrument tech), 1 HPT, and 1 IH tech.

Any entry to a pit will require approximately 4-5 operators, 1 field work supervisor, 2 HPTs, 1 IH tech, and a crane crew to remove and replace pit cover block.

Rounds for the exhauster should be covered by tank farm routines however to be conservative 1 operator and 1 HPT should be assumed.

Enhanced work package planning will involve approximately ½ day field walk down and ½ day for the planning session.

Recommendation was made to look into the requirement for the exhauster and leave open the option to go with breather filters.

Preparation work in the tank farm (installing ventilation) could be done by plant forces or by construction forces.

Colin Henderson

From: Alison_R_Engelman@RL.gov
Sent: Monday, August 26, 2002 11:53 AM
To: chenderson@columbia-energy.com
Subject: RE: burial boxes

Data source: FH Waste Programs - J Lang.

-4X4X8 Burial box = $13,800 = 128 CF w/skid = 142 CF

-FH Rates - just faxed to you - LLMW storage rate of $113.87 - should be used unless you would know for certain that the wastes are LDR compliant, then disposal rates apply

-Transportation to the disposal facility is performed by the generator of the waste. The only estimate I know of is $1,000/shipment used by Retrieval Program(PS Shaus) for WTP Planning. This seems about right - i.e. 20hours for all involved

-----Original Message-----
From: Colin Henderson [mailto:chenderson@columbia-energy.com]
Sent: Monday, August 26, 2002 10:42 AM
To: Alison_R_Engelman@rl.gov
Subject: burial boxes
Importance: High

Alison,
Do you have a cost for 4' x 4' x 8' burial boxes? Also does the $115/CF include transport from the farm to the burial ground? If not what should we put to cover the extra?

Thanks,
Colin

NOC Template

Cost Estimating Input Sheet

230._75 - Develop and Implement Notice of Construction (NOC)

Sub-Activity Task Title:	Develop and Implement "Complex" NOC		
		Revision No.:	3
Sched Act ID:	23_75C	RL WBS No.:	See P3 Schedule
Activity Owner:	ESH&Q	Overall Duration	See P3 Schedule
Prepared By:	VL Wagner		

1.0 Scope Description:

Active exhaust systems and selected intrusive work activities in high level dangerous waste storage tanks represent an increase in the potential-to-emit (PTE) for these tanks. As a result, radiological and non-radiological Notices of Construction (NOCs) may be required.

This estimate provides for the development, processing, review, approval, and implementation of an **"Complex"** NOC. **Complex** NOCs are those that meet one or more of the following criteria: a) sample and other technical data is either not available or will require highly specialized calculations or other interpretation; b) processing activities do not utilize existing technology and processing techniques; c) significant technical unknowns or significant risks that could impact the potential to emit (PTE) exist; or d) abatement technology is not currently in place.

The NOC process involves the following subactivities: 1) **Gather NOC Data:** Develop NOC bounding scope, review process activity documentation, and research source term data; 2) **Prepare Draft NOC:** Prepare draft NOC and tech edit document; 3) **Conduct Internal PHMC NOC Review:** Conduct LMHC and FDH reviews, disposition comments, revise NOC, and prepare and transmit NOC to FDH; 4) **Conduct RL/Regulatory NOC Review:** Conduct RL/PHMC/LMHC review meetings, and provide backup documentation to regulators; 5) **Negotiate NOC:** Disposition RL/Regulatory comments, revise NOC and submit for approval;

See NOTES PAGE for additional SCOPE DESCRIPTION

2.0 Estimating Assumptions & Exclusions:

General Assumptions & Exclusions

A - Sample analyzes, source term, and process data is either not available or may require significant manipulation to support NOC development, or

A - Processing activities may not utilize existing technology, equipment and procedures, or

A - Significant technical unknowns or other significant risks impacting PTE may be identified, or

A - Abatement technology, equipment and procedures may not be in-place.

A - Permit conditions are imposed that may require modification of facilitiy operating, maintenance or surveillance procedures, however, no physical plant modifications will be required.

See NOTES PAGE for additional SCOPE DESCRIPTION

3.0 Risks and Mitigating Actions

GENERAL RISKS and MITIGATING ACTIONS:

R - **MEDIUM.** The regulators may not accept existing data and/or permit conditions. Mitigation will need to be determined if the risk event occurs; the path forward is dependent on specific issues identified by regulators.

R - **HIGH.** Schedule and cost may be impacted if NOCs are not processed with high priority. Mitigation can be achieved by identifying a single point of contact within the PHMC and RL to review and expedite approvals.

See NOTES PAGE for additional RISKS AND MITIGATING ACTIONS

4.0 Basis of Estimate:

This estimate was prepared using subject matter experts anecdotal information and historical experience. Development and implementation of NOCs is a routinely performed activity, however, detailed historical costs have not been maintained.

5.0 Estimate Stage and Method:

PRELIMINARY.

6.0 Legal Drivers/Reference Documents:

See Technical Basis Review Narrative, Section 2.0, Reference Documents and Reports.

4/27/00 - 9:18 AM

CEIS230_75.xls / 23_75C

Cost Estimating Input Sheet

230._75 - Develop and Implement Notice of Construction (NOC)

Sub-Activity Task Title:	Develop and implement "Complex" NOC		
Sched Act ID:	23_75C	RL WBS No.:	Revision No.: 3
Activity Owner:	ESH&Q		See P3 Schedule
Prepared By:	VL Wagner		Overall Duration: See P3 Schedule

7.0 Resource Requirements:

P3 Activity	Sub Task	P3 Res Code	Resource Type	Fiscal Year	SubTask Description	Org Code	RID	P3 Cost Account	Note Ref.	Budget Qty	Qty Type
23_75C1	1	LE05E	LMHC - Environmental Engineers		Scope and validate Complex NOC (Complex)	7B200				6	HRS
23_75C1	1	LE13E	LMHC - Other Engineers		Scope and validate NOC (Complex)	74000				6	HRS
23_75C1	1	LE05E	LMHC - Environmental Engineers		Review activity documentation for NOC (Complex)	7B200				8	HRS
23_75C1	1	LE13E	LMHC - Other Engineers		Review activity documentation for NOC (Complex)	74000				4	HRS
23_75C1	1	LE05E	LMHC - Environmental Engineers		Research source term data for NOC (Complex)	7B200				8	HRS
23_75C1	1	LE13E	LMHC - Other Engineers		Research source term data for NOC (Complex)	74000				10	HRS
23_75C1	1	LP08E	LMHC - Health Physicists		Research source term data for NOC (Complex)	79000				10	HRS
23_75C2	2	LE05E	LMHC - Environmental Engineers		Prepare Draft NOC (Complex)	7B200				120	HRS
23_75C2	2	WG01E	WMH - Administrative Assistants		Technical Editing - Draft (Complex)	31200				24	HRS
23_75C3	3	HE05E	FDH - Environmental Engineers		Review Draft NOC (Complex)	4H700				8	HRS
23_75C3	3	LP08E	LMHC - Health Physicists		Review Draft NOC (Complex)	79000				8	HRS
23_75C3	3	LE13E	LMHC - Other Engineers		Review Draft NOC (Complex)	74000				8	HRS
23_75C3	3	LM02E	LMHC - Managers & Executives		Review Draft NOC (Complex)	79000				8	HRS
23_75C3	3	LE05E	LMHC - Environmental Engineers		Revise and Disposition comments (Complex)	7B200				40	HRS
23_75C3	3	WG01E	WMH - Administrative Assistants		Technical Editing - Final Draft (Complex)	31200				10	HRS
23_75C3	3	LE05E	LMHC - Environmental Engineers		Prepare FDH Transmittal Letter (Complex)	7B200				4	HRS
23_75C3	3	LG02N	LMHC - Office Clks(General)		Type and process FDH Transmittal Letter (Complex)	7B200				2	HRS
23_75C4	4	LE05E	LMHC - Environmental Engineers		Conduct RL/PHMC/LMHC NOC Review Mtg (Complex)	7B200				6	HRS
23_75C4	4	HE05E	FDH - Environmental Engineers		Attend NOC Review Meeting (Complex)	4H700				6	HRS
23_75C4	4	LE05E	LMHC - Environmental Engineers		Provide Backup Material to Regulators (Complex)	7B200				10	HRS
23_75C4	4	LE13E	LMHC - Other Engineers		Provide Backup Material to Regulators (Complex)	74000				8	HRS
23_75C4	4	LP08E	LMHC - Health Physicists		Provide Backup Material to Regulators (Complex)	79000				8	HRS
23_75C5	5	LE05E	LMHC - Environmental Engineers		Revise NOC and Disposition comments (Complex)	7B200				40	HRS
23_75C5	5	LE13E	LMHC - Other Engineers		Revise NOC and Disposition comments (Complex)	74000				15	HRS
23_75C5	5	LP08E	LMHC - Health Physicists		Revise NOC and Disposition comments (Complex)	79000				15	HRS
23_75C6	6				WAIT FOR REGULATORY APPROVAL						

4/27/00 - 9:18 AM

CEIS230_75.xls / 23_75C

Cost Estimating Input Sheet

230._75 - Develop and Implement Notice of Construction (NOC)

Sub-Activity Task Title:	Develop and Implement "Complex" NOC		Revision No.: 3
Sched Act ID:	23_75C	RL WBS No.:	See P3 Schedule
Activity Owner:	ESH&Q		Overall Duration: See P3 Schedule
Prepared By:	VL Wagner		

7.0 Resource Requirements (Cont'd):

P3 Activity	Sub Task	P3 Res Code	Resource Type	Fiscal Year	SubTask Description	Org Code	RID	P3 Cost Account	Note Ref.	Budget Qty	Qty Type
23_75C7	7	LE05E	LMHC - Environmental Engineers		Distribute NOC (Complex)	7B200				2	HRS
23_75C7	7	LE05E	LMHC - Environmental Engineers		Prepare and Conduct NOC Briefing (Complex)	7B200				4	HRS
23_75C7	7	LE08E	LMHC - Nuclear Engineers		Attend NOC Briefing - OE (5 x 2 hr) (Complex)	79A00				10	HRS
23_75C7	7	LP08E	LMHC - Health Physicists		Attend NOC Briefing - RadCon Lead (5 x 2 hr) (Complex)	79700				10	HRS
23_75C7	7	LT05B	LMHC - Health Physics Techs		Attend NOC Briefing -HPT (10 x 2 hr)	67700				20	HRS
23_75C7	7	LR05B	LMHC - Nuclear Wst Process Operator		Attend NOC Briefing - NPO (20 x 2 hr) (Complex)	67300				40	HRS
23_75C7	7	LE13E	LMHC - Other Engineers		Attend NOC Briefing - Engr'g (5 x 2) (Complex)	74000				10	HRS
23_75C7	7	LE13E	LMHC - Other Engineers		Attend NOC Briefing - Cog Engr (Complex)	74D00				2	HRS
23_75C7	7	LE13E	LMHC - Other Engineers		Attend NOC Briefing - Design Auth. (Complex)	74700				2	HRS
23_75C7	7	LE05E	LMHC - Environmental Engineers		Incorporate NOC in S/RID and PCA affected procedures (Complex)	7B200				20	HRS

4/27/00 - 9:18 AM

CEIS230_75.xls / Z3_75C

Cost Estimating Input Sheet

230._75 - Develop and Implement Notice of Construction (NOC)

Sub-Activity Task Title:	Develop and implement "Complex" NOC		
			Revision No.: 3
Sched Act ID:	23_75C	RL WBS No.:	See P3 Schedule
Activity Owner:	ESH&Q		Overall Duration See P3 Schedule
Prepared By:	VL Wagner		

8.0 Notes

Note Number	Note Description

Section 1.0, Scope Description, Continued

6) **Provide Regulatory NOC Approval:** Regulators review, approve and transmit final NOC to RL/PHMC/LMHC; and 7) **Implement NOC:** Review and distribute approved NOC, brief operations and engineering personnel, and initiate changes to incorporate NOC into S/RID and operations/maintenance requirements procedures.

In FY99 (October 1998), the following NOCs were identified as "Complex" for the purposes of cost estimating:
C-103 Rad (1) - Activity ID. 23575C1-C7
C-103 NonRad (1) - Activity ID. 23575CA-CG
(244-U DCRT Ref 230-T75 and 23S75BA-BG)

Section 2.0, Assumptions & Exclusions, General Assumptions/Exclusions, continued

A - Resources and resource quantities for development and implementation of "**complex**" Rad and NonRad NOCs are equivalent.
A - Schedule duration for "**Complex**" Rad and NonRad NOCs are equivalent.
A - All "stacks" are designed and fabricated/upgraded to meet control and monitoring requirements for major stacks. Reference TBR 230.090
A - Rad NOCs are approved by FDH, RL, EPA and WDOH (Health)
A - NonRad NOCs are approved by FDH, RL, EPA and WDOE (Ecology)
A - Regulatory default approval will occur 60 days following submittal if no comments are submitted or other action is taken by the regulators.
A - Complex NOC briefings will include key management and technical personnel, and field operating personnel, including HPTs, responsible for the operating and surveillance activities covered by the NOC.
E- RL resources to review, expedite and process NOCs is a routine RL function and is not included in this estimate.
E - Health, Ecology and EPA resources to review, expedite, and process NOCs is a routine regulatory function and is not included in this estimate.
E - Level 3 and above management involvement in the NOC development and implementation process is a function of the position and is not included in this estimate. Reference Program Management and General Administration TBRs (Typical 230.xxx and 190.xxx)
E - Operating and Administrative procedure revision, processing, review, approval and management is excluded from this estimate.
E - Maintenance procedure revision, processing, review, approval and management is excluded from this estimate.

Section 3.0, General Risk/Mitigating Actions, Continued

R - **MEDIUM** Unanticipated permit conditions may be imposed by regulators during the permitting process. Mitigation has been partially achieved through the design/upgrade of exhausters to be used by Interim Stabilization to meet NESHAPS sampling and monitoring requirements. Reference TBR 230.090.

See NOTE PAGE (2) FOR ADDITIONAL INFORMATION

4/27/00 - 9:18 AM CEIS230_75.xls / 23_75C

Cost Estimating Input Sheet

230. 75 - Develop and Implement Notice of Construction (NOC)

Sub-Activity Task Title:	Develop and Implement "Complex" NOC		Revision No.: 3
Sched Act ID:	23_75C	RL WBS No.:	See P3 Schedule
Activity Owner:	ESH&Q		Overall Duration See P3 Schedule
Prepared By:	VL Wagner		

8.0 Notes

Note Number	Note Description

C-103 TANK SPECIFIC INFORMATION

Section 2.0, Assumptions/Exclusions_C-103 Tank Specific:
A - 1 Rad NOC is required.
A - 1 NonRad NOCs will be required
A - C-103 NOCs are considered "complex" due to the organic layer and other issues realted to comingling and Privatization Contractor acceptance of C-103 waste.
A - A second C-103 Non-Rad NOC is not required; the organic layer will not be removed.

Section 3.0, Risks/Mitigating Actions_C-103 Tank Specific:
R - HIGH. Cost and schedule risk is high for processing NonRad NOCs due to the technical and contractual unknowns surrounding removal and processing of the floating organic layer in C-103. Mitigation can be achieved through: 1) close coordination with technical and management personnel during C-103 preparation and planning activities; and, 2) Modification of the schedule and estimate based on the results of (1).

4/27/00 - 9:18 AM

CEIS230_75.xls / 23_75C

SUPER GROUTER™

GROUT KING™

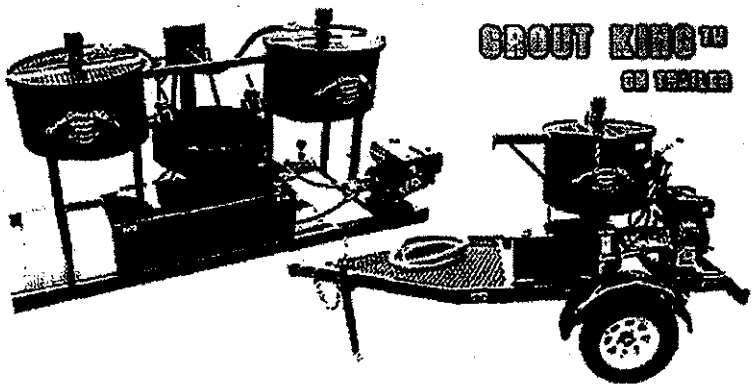

The Walnut Grove Mfg.,Inc. GROUT KING™and SUPER GROUTER™ are self contained units designed for the purpose of mixing and pumping slurries of portland cement or bentonite based grout into the drilled well annulus. The grout provides an inexpensive, sanitary seal between the well casing and the formation, allowing the user to comply with federal, state and local health codes with a minimum amount of time, work and investment, when constructing or abandoning a drilled well. The unit consists of a paddle-type mixer and a hopper tub mounted on a skid base. An industrial grade gasoline engine drives a hydraulic pump which powers the mixing paddles and a progressive cavity pump. The GROUT KING™ and SUPER GROUTER™ can stand alone, be truck-mounted or towed behind the operation.

2194 ☒

GROUT KING™

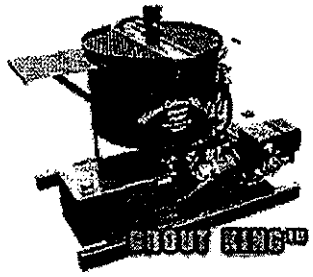

SIMPLICITY
There are only two levers required to operate the GROUT KING™ The Mix Lever and Pump Lever. No other adjustments required.

ONE MAN OPERATION
One person using our GROUT KING™ can mix and pump approximately 30 bags of cement, or 15 - 20 bags of Bentonite per hour. These quantities can be increased greatly by incorporating a larger progressive cavity pump on the GROUT KING™.

PUMPING CAPABILITIES
The GROUT KING™ can mix and pump 250-400 Gallons of product per hour, depending on the product that is being pumped.

RECIRCULATING SYSTEM
This recirculating system will allow the operator to keep a shearing action on the product while waiting. If for any reason the operator is detained during the pump cycle, he can quick couple the discharge hose into the side of the hopper and re-circulate back into the mixer, and pump, thereby retarding dehydration.

65 GALLON HOPPER
The GROUT KING™ hopper is designed with a cone shaped, funnel bottom mounted directly over the intake of the Progressive Cavity Pump so that everything that goes in the hopper, goes in the pump.No Flat bottom for product to dry in the corners.

All features on the GROUT KING™ are standard equipment. The Pressure Gauge, Discharge Hose, Quick Coupler, 13 HP Honda Engine, 2 - Speed Mixer. Progressive Cavity Pump.

STANDARD FEATURES

FORWARD AND REVERSE PRESSURE FLUSH CAPABILITY
For clean-up, the pump can run in forward or reverse. Utilizing the forward and reverse pressure flush assures the operator that his pump, which is the heart of his machine, is completely cleaned.

DISCHARGE PRESSURE
The GROUT KING™ can reach pressures up to 300 psi on non-continuous duty cycle. 150-250 psi is recommended on a continuous duty cycle.

SPECIFICATIONS

DIMENSIONS

SKID UNIT
weight: 650 lbs.
height:47"
length:56"
width: 37"

ENGINE

Type - Horizontal shaft, 4cycle, gas, cast iron sleeve
Make - Honda
Rating - 13 HP Honda
Fuel Tank Capacity - 1 1/2 gallons

PUMP

Type - Progressive Cavity
Model - 2L4 CDQ
Maximum Flow - 20 gpm
Maximum Pressure - 175 psi
Drive - Hydraulic motor, flex coupling

MIXER

Cement Capacity - 4 - 94lb bags
Slurry Capacity - 65 gallons

HYDRAULIC PUMP

Type -Gear
Flow - 18 gpm
Maximum Pressure - 720 psi
Drive - Flex coupling

HYDRAULIC RESERVOIR

Capacity - 15 gallons
Filtration - 10 micron, spin-on element.

Toll Free (800)851-0436
Phone (360)693-5096
Fax (360) 693-9286
email:russ@groutking.com

Walnut Grove Mfg Inc.

3108- A NE 65th St.
Vancouver, WA 98663
www.GROUTKING.com

VISA

These engineering specifications are computed on a theoretical basis. Actual capacities will vary according to specific operating conditions. Walnut Grove Mfg., Inc. reserves the right to change specifications without notification or obligation.

PRICING GUIDE

Please call or e-mail us for local distributor information and leasing options.

Product	Sugg. Retail Price
GROUT KING™ - Trailer Unit	$7560.00
GROUT KING™ - Skid Only	$6279.00
SUPER GROUTER™- Trailer Unit	$12,250.00
SUPER GROUTER™- Skid Only	$10,750.00

LOW MONTHLY PAYMENTS

Toll Free (800)851-0436
Phone (360)693-5096
Fax (360) 693-9286
email:russ@groutking.com

Walnut Grove Mfg Inc.

3108- A NE 65th St.
Vancouver, WA 98663
www.GROUTKING.com

VISA

[redacted]

[redacted]

These engineering specifications are computed on a theoretical basis. Actual capacities will vary according to specific operating conditions. Walnut Grove Mfg., Inc. reserves the right to change specifications without notification or obligation.

This page intentionally left blank.

APPENDIX B
APPLICABLE SPECIFICATIONS

This page intentionally left blank.

APPENDIX B
APPLICABLE SPECIFICATIONS

Outline Specification Index

Division - Section	Title	241-C Farm	241-C-106	241-C Farm 200-Series
Division 2	**Site & Civil Engineering**			
0205-1	Demolition	X	X	X
0260	Piped Utility Materials	X		
0275	Industrial Wastewater Treatment	X		
0280-1	Site Improvements – Fencing	X		
0280-3	Surface Restoration	X		
Division 3	**Concrete**			
Division 5	**Metals**			
0512	Structural Steel		X	X
0532	Metal Fastening		X	X
Division 9	**Finishes**			
0980	Special Coatings		X	X
0990	Painting		X	X
Division 15	**Mechanical**			
1540-99.1	Process Piping	X		
1540-99.2	Service Piping	X		
1550	HVAC		X	X
Division 16	**Electrical**			
1630	Service and Distribution	X		

OUTLINE SPECIFICATION

DIVISION 2 – SITEWORK

SECTION 0205-1 DEMOLITION

Table CS-2-1, "Equipment Removal/Installation," identifies the equipment to be installed or removed and disposed of to effect residual waste stabilization, tank stabilization, and stabilization of in-tank equipment, risers, and at-tank pits for tank 241-C-106 and the 241-C farm 200-series tanks.

Table CS-2-1. Equipment Removal/Installation (2 Sheets)

	Component	Install	Remove	Temporary	Reuse
241-C Farm					
Grout plant	Raw water service	X			
Grout plant	Service air	X			
Constr. trailer	Power	X		X	
Constr. trailer	Telephone service	X		X	
Constr. site	Construction fence	X		X	X
241-C-106					
HVAC	296-P-16 portable exhauster		X		
HVAC	Portable exhauster	X		X	X
Heel pit	HVAC duct	X			
Heel pit	Inlet filter	X			X
R-7	Video camera	X		X	X
R-13	Articulated mast system		X		
R-13	Slickline	X		X	X
Heel pit	Pit cover		X		
Pump pit	Pit cover		X		
Sluice pit	Pit cover		X		
HVAC	Pit cover		X		
R-1	Enraf		X		
R-8	Thermocouple tree head		X		
R-14	Thermocouple tree head		X		
241-C Farm 200-Series					
HVAC	Portable exhauster	X		X	X
Pump pit	HVAC duct	X			
HVAC pit	HVAC duct	X			
Pump pit	Inlet filter	X			X
R-10	Articulated Mast System		X		
R-10	Slickline	X		X	X
R-7	Camera	X		X	X
HVAC pit	Pit cover		X		
Pump pit	Pit cover		X		

Table CS-2-1. Equipment Removal/Installation (2 Sheets)

	Component	Install	Remove	Temporary	Reuse
241-C-201					
R-5	Breather filter		X		X
R-6	Thermocouple tree head		X		
R-8	Enraf		X		X
241-C-202					
R-5	Breather filter		X		X
R-6	Thermocouple tree head		X		
R-8	Enraf		X		X
241-C-203					
R-5	Enraf		X		X
R-6	Thermocouple tree head		X		
R-8	Breather filter		X		X
241-C-204					
R-5	Enraf		X		X
R-8	Breather filter		X		X

HVAC = heating, ventilation, and air conditioning.

SECTION 0220 EARTHWORK

241-C Farm

1. Excavation for underground utility trenches in non-radiologically controlled area.
2. Clearing of vegetation in non-radiologically controlled area.

241-C-106

1. Excavation of cascade line cleanout in radiologically controlled area.

SECTION 0260 PIPED UTILITY MATERIALS

241-C Farm

1. Raw water service with heat trace from 241-C-73 Air and Water Service Building to portable grout plant site.

2. Service air from 241-C-73 Air and Water Service Building to portable grout plant site.

SECTION 0275 INDUSTRIAL WASTEWATER TREATMENT

241-C-106

1. Collection, transportation, and treatment of wastewater from flushing of grout plant mixer and pump.

241-C Farm 200 Series

1. Collection, transportation, and treatment of wastewater from flushing of grout plant mixer and pump.

SECTION 0280-1 SITE IMPROVEMENTS – FENCING

241-C Farm

1. Temporary construction fence around grout production site.
2. Modification of 241-C farm RCA fence for slickline construction.

SECTION 0280-3 SURFACE RESTORATION

241-C Farm

1. Isolate and remove temporary utilities.
2. Remove construction fence.
3. Restore surface at grout plant site and bulk material storage site.

DIVISION 3 – CONCRETE

To be determined.

DIVISION 5 – METALS

SECTION 0512 STRUCTURAL STEEL

1. Rolled steel shapes and plates: ASTM A36.
2. Steel tubing: ASTM A500, Grade B.
3. Diamond deck plating as temporary trench cover.

SECTION 0532 METAL FASTENING

1. Bolts: Structural: ASTM A325.
2. Bolts: General application: ASTM A 307, Grade A or B.
3. Nuts: ASTM A563, heavy hex.
4. Washers: ASTM F844, circular.
5. Welding electrode: E70XX.
6. Expansion anchors: Hilti Kwik-Bolt II.
7. General fastening: AISC S326 and M011.
8. Welding: AWS D1.1 and D1.2.

DIVISION 9 – FINISHES

SECTION 0980 SPECIAL COATINGS

1. Contamination fixatives of pit and riser surfaces.
2. Weather sealed foam or epoxy of abovegrade pits and risers for water ingress prevention.

SECTION 0990 PAINTING

1. Exterior metal surfaces

    a. Surface preparation: SSPC SP 2 (power tools) or SSPC SP 3 (commercial surface blast).

    b. Application: PDCA Architectural Specification Manual and manufacturer's instructions.

    c. Primer: Rust-inhibitive ferrous metal primer.

    d. Base and finish coats: Alkyd semi-gloss enamel.

DIVISION 15 – MECHANICAL

SECTION 1540-99.1 PROCESS PIPING

1. Commercial grout delivery slickline.

SECTION 1540-99.2 SERVICE PIPING

1. Materials: ASTM A106, Grade B, schedule 40.
2. Fabrication: ASME B31.9.

SECTION 1550 HVAC

1. Materials
   a. Duct: ASTM A240, Type 304 or 304L.
   b. Shapes: ASTM A276, Type 304 or 304L.
   c. Duct Supports: Channels: Unistrut.
   d. Duct Supports: Shapes: ASTM A36 or ASTM A276, Type 304 or 304L.
   e. Duct Supports: Rods: ASTM A108.
   f. Fasteners: Cadmium plated ASTM A307, Grade A or B bolts with ASTM A563 heavy hex nuts, UNC threads.
2. Equipment: 500 scfm portable exhauster.

DIVISION 16 – ELECTRICAL

SECTION 1630 SERVICE AND DISTRIBUTION

NFPA 70.

APPENDIX C
CALCULATIONS

This page intentionally left blank.

APPENDIX C
CALCULATIONS

ACCELERATED TANK CLOSURE DEMONSTRATION TANK STRUCTURAL ASSESSMENT

The Accelerated Tank Closure Demonstration calls for filling the candidate waste tanks with grout or a flowable fill material (also known as controlled low-strength material). One of the functions of the fill material is to physically stabilize the waste tank by filling the void space left after waste retrieval is complete. Structural stabilization includes preventing excessive soil subsidence above the tank that could impair the function of the closure barrier. Thus, an important functional requirement of the fill material is that after a tank is filled, the material shall provide sufficient resistance to dome deflections caused by soil overburden. The properties of the fill material must also be such that the addition of the fill material does not cause excessive mechanical or thermal stresses in the tank structure.

Stabilization of the tank includes the addition of a closure barrier that will increase the soil overburden on the tanks by approximately 12 feet. Because excessive soil subsidence could impair the function of the closure barrier, a maximum subsidence of approximately 4 inches at the top of the tank is specified after the closure barrier is in place. Because the external soil pressure will be equilibrated by the internal pressure of the fill material, the strength of the fill material does not appear to be a significant structural issue. For example, simply using sand as a fill material may suffice to balance the outside soil pressure and prevent excessive soil subsidence.

A more significant structural issue associated with the fill material is the volumetric change of the material during the curing or drying process. If the fill material expands as it solidifies, the induced stresses could cause cracks in the tank walls. However, any through-wall cracking is not expected to affect the structural stability of a filled tank. If the fill material shrinks as it solidifies, void spaces could be created between the fill material and the tank structure. Such void spaces could increase the stress on the tank walls and increase the soil subsidence over the top of the tank. These phenomena can be avoided or minimized by using a fill material that has minimal volumetric change during drying or curing or by leaving the fill access open until well into the grout curing process. This would allow the top of the tank to be capped off before filling the tank penetrations.

Another issue that could affect the stresses in the tank structure during placement of the fill material is the maximum allowable lift height of the fill material. The placement of the fill material will induce both mechanical and thermal stresses in the tank structure. Significant structural damage from grout hydrostatic head is not likely because the internal pressure tends to be balanced by the outer boundary soil pressure. According to *Single-Shell Waste Tank Load Sensitivity Study* (SD-RE-TI-012), the tanks are relatively insensitive to internal hydrostatic loads and the worst case for hydrostatic loads is when a tank is empty. Consequently, it is likely that the most severe stress condition during the placement of the fill material is the initial condition; that is, an empty tank with no internal equilibrating pressure.

The most straightforward way of controlling the induced mechanical stresses is to adhere to the current operating specifications for maximum allowable waste levels in the tanks. According to *Operating Specifications for Single-Shell Waste Storage Tanks* (OSD-T-151-00013), the maximum allowable waste level for the 100-series single-shell tanks (SSTs) in the 241-C tank farm is 185 inches. The maximum allowable waste level for the 200-series tanks is 280 inches. The maximum allowable waste level in the tanks is based on waste having a specific gravity of 2.0 (HNF-4712). The fill material is expected to have a specific weight in the range of 120 to 145 lbf/ft^3. According to OSD-T-151-00013, exceeding the maximum allowable waste levels may result in contaminated overflow into connected lines, if the waste is liquid. That is, the maximum allowable waste level is apparently not governed by structural concerns and it is not expected that completely filling the tanks with fill material will cause excessive mechanical stresses.

Heat is generated as a result of hydration reactions that occur as the fill material is transformed from a slurry into a solid material. The lift heights and time between lifts must be controlled to prevent thermal cracking and dehydration of the fill material, and excessive thermal stresses in the tank structure. According to *State of the Art Report on High-Level Waste Tank Closure (U)* (WSRC-TR-2001-00359), the amount of heat generated and the resulting temperature rise is usually not a limiting design issue for flowable fills. This is because flowable fills have relatively low cement contents (therefore low temperature rises) relative to construction concrete and high strength fills. However, because the formulation of the fill material is not available at this time, this issue will have to be addressed when the properties of the fill are defined.

Maximum waste temperatures for SSTs are specified in OSD-T-151-00013. In that document, the maximum allowable waste temperature is given as 300 °F, the maximum dome concrete temperature is 250 °F, and the maximum temperature change rate is 20 °F/day. It is also noted in that document that more restrictive temperature limits apply to tank 241-C-106. The more restrictive limit is stated in Section 3.3.1 of the Limiting Conditions for Operation that appear in *Tank Waste Remediation System Technical Safety Requirements*, (HNF-SD-WM-TSR-006). The maximum waste temperature applicable to tank 241-C-106 is 205 °F and applies to tank 241-C-106 during and after waste retrieval sluicing system operations. The more restrictive limit may not be applicable for tank closure operations.

Although not specifically stated in OSD-T-151-00013, the maximum temperatures in that document are not expected to be applicable to the 200-series tanks. The 200-series tanks were not subject to thermal loads and thus were not evaluated for elevated temperatures (SD-RE-TI-035). Thus, the allowable temperature for the 200-series tanks remains an open issue.

LONG-TERM STRUCTURAL ISSUES

1. *Grout Chemistry Compatibility with the Tank Reinforcing Steel*: The caustic chemical makeup of the heel waste could contribute to long-term corrosion of the rebar in the floor region of the tank.

2. *Thermal or Mechanically Induced Stress Cracking in the Tank Walls*: Although through-wall cracking in the tank walls is not a tank collapse concern, the cracks could adversely affect the long-term radionuclide migration.

3. *Existing Caustic Chemicals in the Soil*: Sixty-seven of the 149 SSTs are categorized as known or assumed leakers. The chemistry of the surrounding soil in the leak path could contribute to long-term damage to the tank structure.

4. *Long-Term Creep of the Fill Material*: Dead-weight stresses in the fill material could result in void creation at the roof level and a gradual buildup of tensile stresses in the lower tank wall region.

REFERENCES

HNF-4712, 1999, *Load Requirements for Maintaining Structural Integrity of Hanford Single-Shell Tanks During Waste Feed Delivery and Retrieval Activities*, Rev. 0, L. J. Julyk, Lockheed Martin Hanford Company, Richland, Washington.

HNF-SD-WM-TSR-006, 1999, *Tank Waste Remediation System Technical Safety Requirements*, Lockheed Martin Hanford Corporation, Richland, Washington.

OSD-T-151-00013, 2000, *Operating Specifications for Single-Shell Waste Storage Tanks*, Rev. D-18, Release Date 11/09/2000.

SD-RE-TI-012, 1983, *Single-Shell Waste Tank Load Sensitivity Study*, Rev. A-0, A. L. Ramble, Rockwell Hanford Operations, Richland, Washington.

SD-RE-TI-035, 1985, *Technical Basis for Single-Shell Tank Operating Specifications*, Rev. 1, Rockwell Hanford Operations, Richland, Washington.

WSRC-TR-2001-00359, 2001, *State of the Art Report on High-Level Waste Tank Closure (U)*, Rev. 0, C. A. Langton et al., Westinghouse Savannah River Company, Aiken, South Carolina.

ENGINEERING CALCULATIONS

ATCD Preliminary Engineering Calculation

Page 1 of 13 Project: 15733
Orignator: L E Elliott Date: 9/19/02
Checker: C Henderson Date: 9/19/02

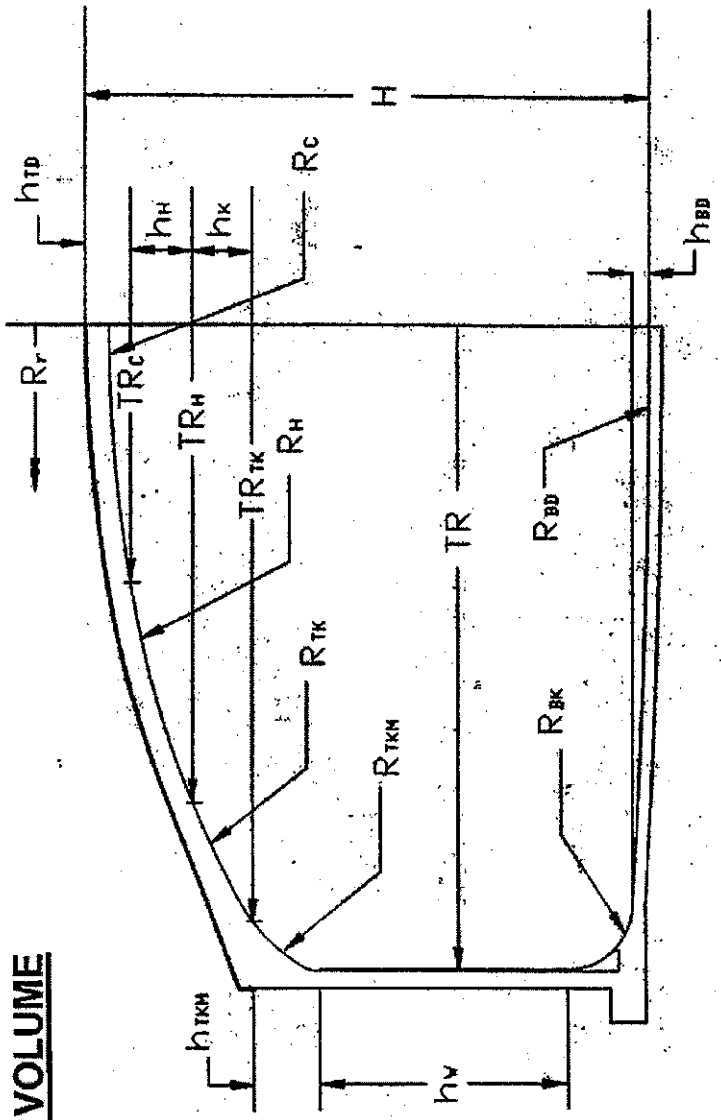

C-106 TANK VOLUME

ATCD Preliminary Engineering Calculation

Page 2 of 13 Project: 15733
Originator: [illegible] Date: 9/19/02
Checker: [illegible] Date: 9/19/02

$H := 31\ ft$		OVERALL INSIDE TANK DEPTH AT CENTER
$TR := 37.5 \cdot ft$		INSIDE TANK RADIUS AT STRAIGHT WALL
$TR_C := 15 \cdot ft$		TANK RADIUS of DOME CAP
$TR_H := 33.365 \cdot ft$		OUTER TANK RADIUS of DOME HAUNCH
$TR_{TK} := 37.271 \cdot ft$		OUTER TANK RADIUS of KNUCKLE AT TOP
$R_C := 95 \cdot ft$		RADIUS of DOME CAP
$R_H := 60 \cdot ft$		RADIUS of DOME HAUNCH
$R_{TK} := 10 \cdot ft$		RADIUS of KNUCKLE AT TOP
$R_{TKM} := 2 \cdot ft$		RADIUS of MINOR KNUCKLE AT TOP
$R_{BK} := 4 \cdot ft$		RADIUS of KNUCKLE AT BOTTOM
$h_{TD} := 1 \cdot ft + 2 \cdot in + \frac{5}{16} \cdot in$	$h_{TD} = 1.193\ ft$	DEPTH of DOME CAP
$h_H := 6 \cdot ft + 1 \cdot in + \frac{3}{16} \cdot in$	$h_H = 6.099\ ft$	DEPTH of HAUNCH
$h_K := 3.667 \cdot ft$		DEPTH of KNUCKLE AT TOP
$h_{TKM} := 1 \cdot ft + .25 \cdot in$	$h_{TKM} = 1.021\ ft$	DEPTH of MINOR TOP KNUCKLE
$h_W := 14 \cdot ft + .25 \cdot in$	$h_W = 14.021\ ft$	DEPTH of STRAIGHT WLALL OF TANK
$h_{BD} := 1 \cdot ft$		DEPTH of BOTTOM DISH
$TR_{BD} := 33.74 \cdot ft$		TANK RADIUS of BOTTOM DISH
R_r		TANK RADIUS TO RISER CENTERLINE
$R_{BD} := 569.59 \cdot ft$		RADIUS of BOTTOM SPHERICAL DISH

ATCD Preliminary Engineering Calculation

Page 3 of 13 Project: 15733
Originator: [illegible] Date: 9/19/02
Checker: [illegible] Date: 9/19/02

BOTTOM DISH VOLUME:

MODELLED AS A SPHERICAL CAP

$$TR_{BD} := \sqrt{h_{BD} \cdot (2 \cdot R_{BD} - h_{BD})}$$

$$TR_{BD} = 33.737\ ft$$

$$V_{BD} := \frac{1}{6} \pi \cdot h_{BD} \cdot \left(3 \cdot TR_{BD}^2 + h_{BD}^2\right)$$

$$V_{BD} = 1.788 \cdot 10^3\ ft^3$$

ATCD Preliminary Engineering Calculation

Page 4 of 13 Project: 15733
Originator: [illegible] Date: 7/18/02
Checker: [illegible] Date: 7/19/02

BOTTOM KNUCKLE REGION VOLUME:

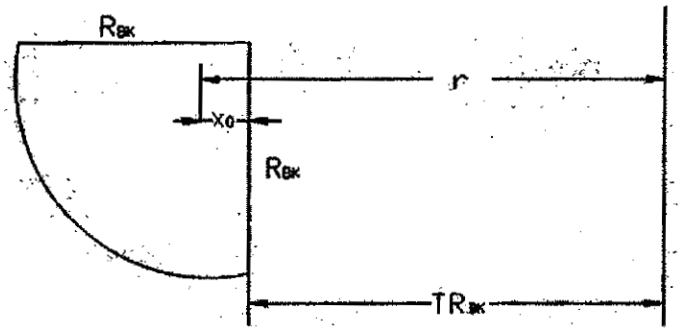

V_{BK} =VOL of KNUCKLE + VOL of CYLINDER

(KNUCKLE VOL FOUND BY 1/4 CIRCLE AREA) X (CIRCUMFERENCE THROUGH CENTROID)

$X_0 := \frac{2}{\pi}(R_{BK})$ $\quad X_0 = 2.546\ ft$

$TR_{BK} := TR_{BD}$ TANK RADIUS at BOTTOM KNUCKLE

$r := TR_{BK} + X_0$

$r := TR_{BK} + \frac{2}{\pi} \cdot R_{BK}$

$V_{BK} := \left(\frac{\pi}{4} R_{BK}^2\right) \cdot (2\pi) \cdot \left(TR_{BK} + \frac{2}{\pi} R_{BK}\right) + \pi (TR_{BK})^2 \cdot (R_{BK})$ $\quad V_{BK} = 1.717 \cdot 10^4\ ft^3$

ATCD Preliminary Engineering Calculation

Page 5 of 13 Project: 15733
Originator: [illegible] Date: 9/19/02
Checker: [illegible] Date: 9/19/02

STRAIGHT WALL VOL:

$V_W := \pi\,(TR)^2 \cdot h_W$

$V_W = 6.194 \cdot 10^4\ ft^3$

MINOR TOP KNUCKLE REGION VOL:

MODELED AS 1/2 SEGMENT OF A CIRCLE AREA X CIRCUMFERENCE THROUGH CENTROID + CYLINDER REGION

$r := R_{TKM}$

$h := h_{TKM}$

$c := \operatorname{asin}\left(\frac{h}{r}\right)$ $\quad c = 0.536 \cdot rad$

$X_0 := (2\,r)\,\frac{(\sin(c))^3}{3\,(c - \cos(c) \cdot \sin(c))}$ $\quad X_0 = 1.833\ ft$ $\quad \theta := 2\,c$

$A := \frac{r^2}{4} \cdot (\theta - \sin(\theta))$ $\quad A = 0.193\ ft^2$

$R := TR_{TK} + X_0$ $\quad R = 39.104\ ft$

$V_{TKM} := 2\,\pi\,(R \cdot A) + \pi\,(TR_{TK})^2 \cdot h_{TKM}$ $\quad V_{TKM} = 4.503 \cdot 10^3\ ft^3$

ATCD Preliminary Engineering Calculation

Page 6 of 13 Project: 15733
Orignator: L.E. Willet Date: 9/19/02
Checker: C. Hendler Date: 9/19/02

FOR RISERS WITH $R_r > TR_C$

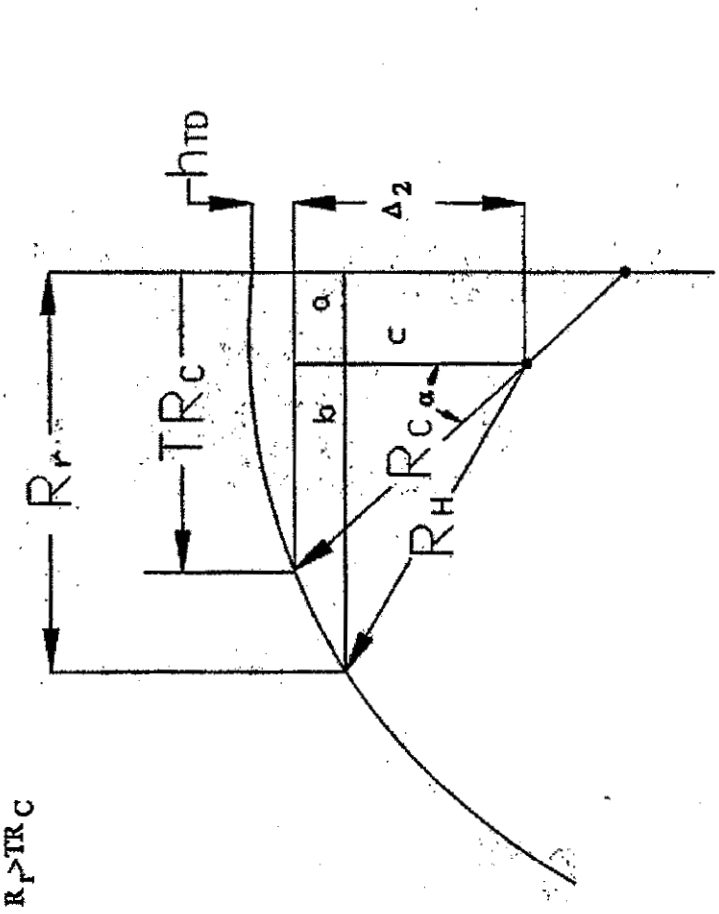

Riser Length = Flange El.-Dome El.+ $h_{TD} + \Delta_2 + c$

$$\alpha := \operatorname{asin}\left(\frac{TR_C}{R_C}\right)$$

$$\Delta_2 := R_H \cdot \cos(\alpha)$$

$$b := R_H \cdot \sin(\alpha)$$

$$a := TR_C - b \qquad c := \sqrt{R_H^2 - (R_r - a)^2}$$

ATCD Preliminary Engineering Calculation

Page 7 of 13 Project: 15733
Orignator: LE Hufft Date: 9/19/02
Checker: [illegible] Date: 9/19/02

RISER LENGTHS

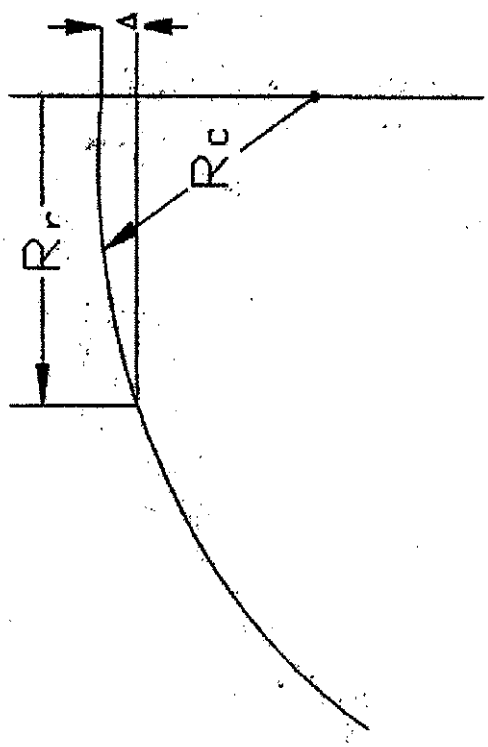

FOR RISER R-14 WITH $R_r < R_C$

$$\Delta := R_C - \sqrt{R_C^2 - R_r^2}$$

RISER LENGTH = FLANGE EL. - DOME EL. +Δ

ATCD Preliminary Engineering Calculation

Page 8 of 13 Project: 15 733
Originator: [illegible] Date: 9/19/02
Checker: [illegible] Date: 9/19/02

DOME HAUNCH VOL:

MODELED AS A SPHERICAL SEGMENT

Where $h := h_H$

$a := TR_H$

$a_1 := TR_C$

$V := \pi \frac{h}{6}\left(3a^2 + 3a_1^2 + h^2\right)$ $V = 1.294 \cdot 10^4\ ft^3$

DOME CAP VOL:

SPHERICAL CAP

WHERE

$h := h_{TD}$ $a := TR_C$

$V := \pi \frac{h}{6}\left(3a^2 + h^2\right)$ $V = 422.426\ ft^3$

ATCD Preliminary Engineering Calculation

Page 9 of 13 Project: 15733
Orignator: [illegible] Date: 9/19/02
Checker: [illegible] Date: 9/19/02

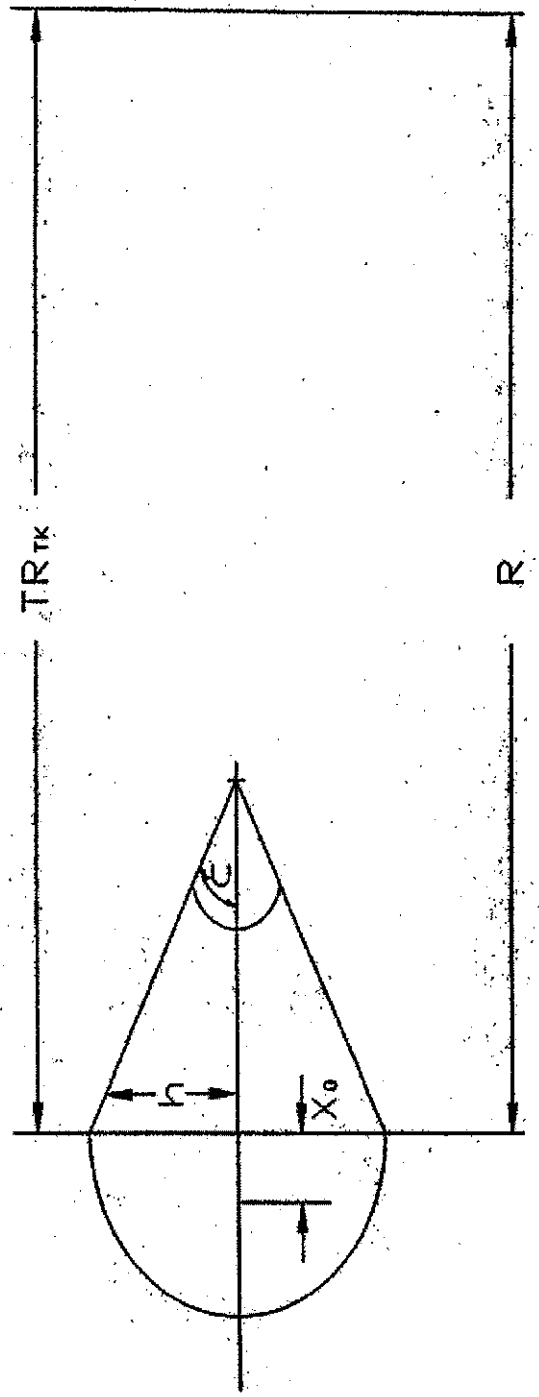

MAJOR TOP KNUCKLE REGION VOLUME:

MODELLED AS (TRIANGULAR AREA) X (CIRCUMFERENCE THROUGH CENTROID) +CYLINDRICAL REGION

$$V_{TK} := \frac{1}{2}(h_K)(TR_{TK} - TR_H)(2\pi)\left[TR_H + \frac{1}{3}(TR_{TK} - TR_H)\right] + \pi\, TR_H^2 \cdot h_K$$

$$V_{TK} = 1.438 \cdot 10^4\ ft^3$$

ATCD Preliminary Engineering Calculation

Page 10 of 13 Project: 15733
Originator: [illegible] Date: 9/18/02
Checker: [illegible] Date: 9/19/02

	PI =	3.1416				Conversions		unit	multiplier	unit
								cyd	201.97	gallon
								cu. ft.	7.48	gallon
	C-106			C-200						
	ft	in		ft	in					
Tank Dia	75			20						
Bottom Dish Depth	1	12		0.5	6					
Bottom Dish Radius	569.59									
Bottom Dish Tank Radius	33.74			9						
Bottom Knuckle Radius	4.00			1			assumed for C-200			
Straight Wall Height	14.02			25.5						
Top Knuckle Radius - Minor	2.00			—						
Minor Knuckle Depth	1.02			—						
Top Knuckle Radius - Major	10.00			—						
Tank Radius - Major Knuckle	37.30			—						
Major Knuckle depth	3.67			—						
Dome Radius - Haunch	60.00			—						
Tank Radius - Haunch	33.40			—						
Haunch depth	6.10			—						
Dome Radius - Cap	95.00			—						
Tank Radius - Cap	15.00			—						
Cap depth	1.19			—						
Dome Depth	12			—						
Slickline Dia	0.42	5		0.41667	5					
Slickline Length	500			300						
	cu. ft.	gal	cyd	cu. ft.	gal	cyd				
Bottom Dish Volume	1,788	13,377	66	63.6829	476	2				
Bot. Knuckle Region Vol	17,168	128,414	636	302.025	2,259	11		Segment of Circle		
Straight Wall Vol	61,942	463,328	2,294	8011.08	59,923	297			Min. Knuckle	Maj. Knuckle
Minor Top Knuckle Vol	4,508	33,719	167	—	—	—		c	0.5357	0.3754
Major Top Knuckle Vol	14,408	107,775	534	—	—	—		x	1.8326	9.5830
Dome Haunch Vol	12,959	96,933	480	—	—	—		A	0.1935	1.7147
Dome Cap Vol	422	3,160	16	—	—	—				
Tank Vol	113,196	846706	4192.24	8376.79	62658	310.236				
Vol per 1' Lift (straight wall)	4,418	33,046	164	314	2,350	12				
Slickline Vol	68	510	3	41	306	2				

ATCD Preliminary Engineering Calculation

Page 11 of 13 Project: 15733
Originator: [illegible] Date: 9/19/02
Checker: [illegible] Date: 9/19/02

Production Schedule										
	C-106		C-200							
Nom. Plant Cap. (cyd/hr)	40	80	40	80						
Nom. 1' Lift Produce Time (hr)	4.1	2.0	0.3	0.1						
Time to fill tank assuming 2, 1' lifts with 10, 3' lifts thereafter (days)										
Grout Set Time (hr)			8	12	24	72				
C-106	1 Line		9.1	11.0	16.5	38.5				
	2 Lines		6.4	8.2	13.7	35.7				
C-200	1 Line		4.1	5.9	11.4	33.4				
	2 Lines		3.9	5.7	11.2	33.2				
Time to fill tank asuming 1'lifts (days)										
Grout Set Time (hr)			8	12	24	72				
C-106	1 Line		15.3	20.3	35.3	95.3				
	2 Lines		12.6	17.6	32.6	92.6				
C-200	1 Line		10.4	15.4	30.4	90.4				
	2 Lines		10.2	15.2	30.2	90.2				
Time to fill tank assuming 2, 1' lifts with 6, 5' lifts thereafter (days)										
Grout Set Time (hr)			8	12	24	72				
C-106	1 Line		7.8	9.0	12.5	26.5				
	2 Lines		5.1	6.2	9.7	23.7				
C-200	1 Line		2.7	3.9	7.4	21.4				
	2 Lines		2.5	3.7	7.2	21.2				

ATCD Preliminary Engineering Calculation

Page 12 of 13 Project: 15733
Originator: [illegible] Date: 9/19/02
Checker: [illegible] Date: 9/19/02

Approximate Volume of Risers; Installed Equipment Not Accounted For

	Elevations	ft.					Conversions			Dome Rad	Tank Rad	Depth
		645	Grade				unit	multiplier	unit	95	15	1.192708
		638	Inside Dome Center C-106				cyd	201.97	gallon	60	33.36	
		633	Inside top C-200				cu. ft.	7.48	gallon			
	Pi =	3.1416										
C-106		Riser Dia		Tank Rad	Flange El.	Length	Vol					
		in	ft	ft	ft	ft	cu. ft.	gal	cyd			
	R-1	4	0.333	33.25	646.15	14.345	1.25	9.36	0.05		alpha =	0.158558
	R-2	12	1.000	32.25	646.18	13.866	10.89	81.46	0.40		h2 =	59.24736
	R-3	12	1.000	32.25	647.24	14.926	11.72	87.69	0.43		a =	5.526316
	R-4	4	0.333	33.25	638.21	6.405	0.56	4.18	0.02			
	R-5	4	0.333	33.25	637.63	5.825	0.51	3.80	0.02			
	R-6	12	1.000	32.75	646.01	13.948	10.95	81.94	0.41			
	R-7	12	1.000	32.75	646.48	14.418	11.32	84.70	0.42			
	R-8	4	0.333	33.25	645.66	13.855	1.21	9.04	0.04			
	R-9	36	3.000	32.5	638.33	6.141	43.41	324.69	1.61			
	R-13	12	1.000	0	643.09	5.090	4.00	29.90	0.15			
	R-14	4	0.333	11.75	645.5	8.229	0.72	5.37	0.03			
	R-15	removed for pit stabilization			—							
TOTALS							96.54	722.14	3.58			
C-200												
	R-5	4	0.333	8	646.48	13.48	1.18	8.80	0.04			
	R-6	12	1.000	8	646.49	13.49	10.60	79.25	0.39			
	R-7	12	1.000	8	646.5	13.5	10.60	79.31	0.39			
	R-8	4	0.333	8	646.48	13.48	1.18	8.80	0.04			
	R-9	12	1.000	4	637.33	4.33	3.40	25.44	0.13			
	R-10	12	1.000	6	637.33	4.33	3.40	25.44	0.13			
TOTALS							30.35	227.03	1.12			

ATCD Preliminary Engineering Calculation

Page 13 of 13 Project: 15733
Orignator: [illegible] Date: 9/19/02
Checker: [illegible] Date: 9/19/02

Pit Volumes; not accouting for equipment within								
						Volume		
C-106	Width	Length	Depth	Duct Dia	Duct Length	cu. ft	gal	cyd
Pump	11	14.5	9	----	----	1,436	10,738	53
Heel	6	9	4.17	----	----	225	1,683	8
Sluice	8.5	9	9	----	----	689	5,150	25
HVAC	3.25	5.75	10	2	12	225	1,680	8
Totals						2,574	19,250	95
C-200								
Pump	5.75	9	10.5	----	----	543	4,064	20
HVAC	3.25	5.75	8	2	12	187	1,400	7
Totals						731	5,465	27
Conversions				PI =	3.1416			
unit	multiplier	unit						
cyd	201.97	gallon						
cu. ft.	7.48	gallon						

Page 1 of 2 Project: 15733
Originator: [illegible] Date: 9/11/02
Checker: [illegible] Date: 9/12/02

ATCD Preliminary Engineering Calculation

Objective: Evaluate the thermal load and determine if the steady state temperature exceeds normal temperature limits for grout or concrete.

Methodology: Simplify the tank configuration and utilize steady state heat transfer relationships to calculate the average temperature at the bottom of the tank. This assumes that the grout has cured and steady state temperatures have been reached.

Assumptions The current concentrations from the BBI will be used along with the assumption that the waste remaining in the tank following retrieval will be 360 ft3 (2700 gallons) of sludge with the same composition. The thermal loading from the waste is assumed to be from Cs-137/Ba, and Sr-90/Y.

Reference: Marks' Standard Handbook for Mechanical Engineers
Decay heat generation taken from WHC-EP-0063-4 Table C-7, Power Factors for Selected Radioisotopes.

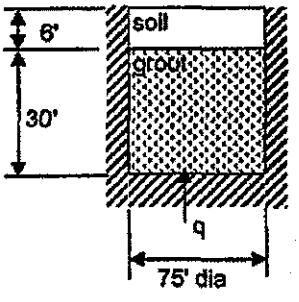

Page 2 of 2 Project: 15733
Originator: [illegible] Date: 9/11/02
Checker: [illegible] Date: 9/12/02

Isotope	Thermal power (W/Ci)	Current Sludge Inventory, Ci	Current Sludge Volume, kl.	Current Sludge Vol, gal	Post Retrieval Vol, gal	Post Retrieval Inventory, Ci	Post Ret Thermal Load, Watts	Conversion watts to Btu/hr	Post Ret Thermal Load, Btu/hr
Sr, Y	6.69E-03	5.64E+05	23	6076.618	2700	2.51E+05	1.68E+03	3.4121	5.72E+03
Cs, Ba	4.72E-03	3.41E+04	23	6076.618	2700	1.52E+04	7.15E+01	3.4121	2.44E+02
	Thermal Conductivities		k						
		Soil, dry with stones	0.3						
		Concrete	1.05						
		Sand, dry	0.188						
	Heat xfer equation	q=(T1-T2)/((L1/k1Am)+(L2/k2Am))							
			q= heat flow, Btu/h						
			T1=temp deg F at the bottom of the grout						
			T2=temp deg F at the tank farm surface						
			k1= thermal conductivity (Btu/h/ft2/unit temp gradient deg F/ft) of grout						
			k2=thermal conductivity of soil						
			L1=thickness of grout, 30 ft						
			L2=thickness of soil, 6 ft						
	simplify geometry of the filled tank to be 2 cylinders								
		Cylinder 1= concrete 75 ft diameter x 30 ft high							
		Cylinder 2 = soil 75 ft diameter x 6 ft high							
		q=	5.96E+03	Btu/hr					
		T1	unknown						
		T2	60	assume at 60 deg F (typical subsurface temperature)					
		k concrete	1.05						
		k soil	0.3	assumes dry soil with stones					
		k dry sand	0.188						
		Am	4415.625	sq ft					
		rearranging equation above							
		t1=q*((l/kAm)+(l/kAm)) +t2							
		T1=	126	at a k of 0.3 (dry soil with stones)					
		T1=	142	at a k of 0.188 (dry sand)					
If bottom of grout is at 126 deg F the top of the grout is at			q=k/L (A) (t1-t0)						
			t0=t1-qL/kA						
			87	degrees F					
	therefore the biggest resistance is from the soil and the grout conducts the heat away								
	relatively well.								
	Sensitivity if all waste is located over half of the tank bottom area								
		q	5.96E+03						
		T1	unknown						
		T2	60						
		k conc.	1.05						
		k soil	0.3						
		Am	1103.90625	ft square					
		T1	262.2153209						
	Look at specific heats and time required to generate a temperature rise								
	this is a cross check to see how long (theoretically) to heat up the grout monolith								
		total volume of grout	838000	gallons					
		weight of grout	14078400	lbs (based on 8.4 lbs/gal for water and a density of 2)					
		specific heat of concrete	0.156	Btu/lbF					
		Btu to raise temp 1 deg F	2195230.4	Btu/F					
		Time to generate	368	hours					

APPENDIX D
LEVEL 2 SPECIFICATION COMPLIANCE MATRIX

This page intentionally left blank.

APPENDIX D
LEVEL 2 SPECIFICATION COMPLIANCE MATRIX (11 SHEETS)

Level 2 Spec Section	Section Title	Applicable Requirement or Objective	Compliance Discussion
3.1.1.1	WAC 173-303-610 Performance Objectives	A. Minimizes the need for further maintenance B. Controls, minimizes, or eliminates to the extent necessary to protect human health and the environment, post-closure escape of dangerous waste	A. Grouting the tanks, in-tank equipment, risers, and at-tank pits will minimize the need for further maintenance of the tank prior to closure of the tank farm. B. Stabilizing the residual waste remaining in the tank with grout will provide for macroencapsulation of the residual that will reduce the long-term release of contaminants to the accessible environment. A numerical assessment of whether or not the tank system, following closure, will meet performance standards for protection of human health and the environment is outside the scope of this report and will be provided in tank-specific closure plans.
3.1.1.2	DOE M 435.1-1 Performance Objectives	A. Post-closure performance based standards for dose B. Limits on the release of radon C. Limits on radionuclides that may be disposed of near-surface D. Protection from inadvertent intruder	Stabilizing the residual waste heel with grout followed by stabilization of the remaining tank void space will serve to reduce the potential releases and potentially reduce the concentration of key contaminants of concern in the stabilized waste heel. A numerical assessment of whether or not the tank system, following closure, will meet performance standards for protection of human health and the environment is outside the scope of this report and will be provided in tank-specific closure plans.
3.1.1.3	10 CFR 61 Performance Objectives	Stabilized waste shall meet requirements of 10 CFR 61, Subpart C or approved site-specific criteria	End state requirements relevant to land disposal of radioactive waste are beyond the scope of this report and will be provided in tank-specific closure plans.
3.1.1.4	10 CFR 830 Performance Objectives	Nuclear safety management	This requirement will be met during detail design. A mandatory Unreviewed Safety Question screening followed by Unreviewed Safety Question evaluation will be performed as required.

APPENDIX D
LEVEL 2 SPECIFICATION COMPLIANCE MATRIX (11 SHEETS)

Level 2 Spec Section	Section Title	Applicable Requirement or Objective	Compliance Discussion
3.1.1.5	Performance Limitations	Pending a NEPA Record of Decision or determination, no action shall be taken that has an adverse environmental impact or limits the choice of reasonable closure alternatives	This requirement is conceptually met through the use of low strength grout that could be removed in the future. A NEPA analysis is currently ongoing that may affect how far the tank fill system can go until a NEPA determination is made.
3.1.2	Waste Heel Stabilization Material	Fill material to be specified by TBD-RPP-11313	In the absence of a tank fill formulation a grout formula was assumed for the preliminary engineering.
3.1.2.1	Function	Material to be placed in contact with residual waste to minimize risk of contaminant migration by liquid absorption, waste encapsulation, cementitious bonding of waste and stabilization material, or chemical interaction with key contaminants	This requirement is conceptually met through the strategy for stabilizing the residual heel with multiple lifts (pours) of grout designed to encapsulate the residual waste material that is not adhered to the tank floor.
3.1.2.2	Structural Properties	Sufficient structural capacity to support succeeding lifts of tank fill material	This requirement is met through the assumed grout formulation.
3.1.2.3	Retrievability	Materials shall be of low compressive strength and shear strength to facilitate removal if necessary	This requirement is met at this stage of the design through the assumed grout formulation. The formulation would be designed for low-strength.

APPENDIX D
LEVEL 2 SPECIFICATION COMPLIANCE MATRIX (11 SHEETS)

Level 2 Spec Section	Section Title	Applicable Requirement or Objective	Compliance Discussion
3.1.3	Tank Fill Material	Fill material requirement; TBD-RPP-11313	This requirement is met at this stage of the design through the assumed grout formulation.
3.1.3.1	Fill Material	Fill material to be placed over the waste heel stabilization material	This requirement is met through the concept presented for placing flowable fill material in the tank to provide structural stability for the tank structure.
3.1.3.2	Fill Characteristics	Free flowing, self-compacting, non-shrink, non-expansive, self-leveling, little or no free water, uniform properties to edge of pour spread	This requirement is met through the use of the assumed Savannah River Site All-In-One Zero Bleed Reducing Fill/Grout System developed at the Savannah River Site.
3.1.3.3	Fill Stability	The fill must be of sufficient compressive strength and shear strength to provide long-term structural stability	This requirement is met through the use of the assumed grout formulation. Initial structural assessment of the tank fill material indicates that the external soil pressure will be equilibrated by the internal pressure of the fill material; the strength of the fill material does not appear to be a significant structural issue.
3.1.4	Tank Fill Process	Use readily available and proven materials, equipment, and technology; existing riser penetrations only; in-tank hardware will not impede tank fill or stabilization; in-tank equipment, risers, and tank space pipe require stabilization; fill drop heights controlled to less than 6 m	This requirement is met by the selected grout delivery and placement system. The general concept for grout delivery, production, and delivery to the tanks is based on commercial equipment and is similar to that deployed at Savannah River for high-level waste tank closure.

APPENDIX D
LEVEL 2 SPECIFICATION COMPLIANCE MATRIX (11 SHEETS)

Level 2 Spec Section	Section Title	Applicable Requirement or Objective	Compliance Discussion
3.1.5	Tank Air Filtration System	Skid mounted exhauster with HEPA similar to those in use	This requirement is met through the tank ventilation concept described for tank 241-C-106 and the 241-C farm 200-series tanks.
3.2.1.1	Control Tank Structure Temperature	Control tank 241-C-106 temperatures to 250 °F max on dome; 300 °F max on structure; max change of 20 °F per day on bulk tank temperature with goal of no more than 3 °F changer per day; limits on 241-C farm 200-series tanks TBD-RPP-11314	This requirement will be met through a combination of grout formulation and fill process control. Since the specifics of the grout formulation have not been defined specific operational controls are TBD.
3.2.1.2	Control Tank Level	Monitor levels against set values	This requirement will be met through the metered grout delivery system to allow placement of specific volumes of stabilizing grout into the tanks.
3.2.1.3	Control Vapor Space Pressure	Tank 241-C-106 control vapor space min pressure to 1 in. wg - waste height (in. wg) less than -9 in. wg max pressure +60 in. wg; 241-C farm 200-series tanks TBD-RPP-11315	This requirement will be met through operating controls on the tank ventilation system. Further definition of the tank ventilation system will be completed during detail design.
3.2.1.4	Control Gaseous Discharges	Control vapor space pressure and filter exhaust air to restrict emissions	This requirement will be met through operating controls on the tank ventilation system.
3.2.2.1	Dome Loading Controls	Sections 5.16A and 5.16B of HNF-IP-1266	The current strategy for grout delivery and placement limits the use of equipment in the farm to the removal of coverblocks which is a routine tank farm operation that is controlled at the detail work package planning level.

APPENDIX D
LEVEL 2 SPECIFICATION COMPLIANCE MATRIX (11 SHEETS)

Level 2 Spec Section	Section Title	Applicable Requirement or Objective	Compliance Discussion
3.2.2.2	Axial Loads	For tank 241-C-106: 500 lbs axial or 250 ft-lb moment on 4 in. riser; 3000 lb axial or 1500 ft-lb moment on 12 in. or larger riser; 1250 lbf (load area diameter +4.25) on tank bottom for 241-C farm 200-series tanks: TBD-RPP-11361	Axial loads on the risers are limited to the grout delivery line for the central riser. Smaller risers will be stabilized/filled by hand.
3.2.3.1	Component Selection	Readily available and proven materials, equipment, and technology, and modular in design	This requirement is conceptually met through the grout delivery and placement system described in the report. The concept uses commercially available materials and equipment.
3.2.3.2	Overall Reliability/Availability	Meet mission schedule for the 5 tanks	This requirement is met by the overall project schedule developed to meet the mission schedule for the 5 tanks. The project schedule is provided in Appendix A.
3.2.3.3	Operational Life	Available from acceptance test and operational readiness review through closure of 5 campaign tanks	This requirement is met by the overall project schedule developed to meet the mission schedule for the 5 tanks. The project schedule is provided in Appendix A.
3.2.3.4.a	In-Tank/In-Pit Design Life	2 years between failure with no maintenance for components that cannot be repaired or replaced remotely TBD-RPP-11316	TBD. There are no functional components installed as a part of tank closure.

APPENDIX D
LEVEL 2 SPECIFICATION COMPLIANCE MATRIX (11 SHEETS)

Level 2 Spec Section	Section Title	Applicable Requirement or Objective	Compliance Discussion
3.2.3.4.b	Abovegrade System/Components	5 years with or without preventive maintenance, regardless of operation TBD-RPP-11316	TBD.
3.2.4.1.a	Natural Environments	HNF-SD-GN-ER-501 and HNF-IP-0842, Volume 4, Section 3.14 with latter taking precedence	TBD.
3.2.4.1.b	Natural Phenomena Hazards	Designed to withstand natural phenomena hazards per HNF-IP-0842, Volume 4, Section 3.14	TBD.
3.2.4.2.a	Chemical	In chemical environment of tanks per HNF-SD-WM-SP-012, Appendix B	This requirement is conceptually met through the design concept. Material and equipment that will go into the tank are limited to the video surveillance system (routinely used) and the grout tremie line.
3.2.4.2.b	Radiation	Radiation environment of tanks	This requirement is conceptually met through the design concept. Material and equipment that will go into the tank are limited to the video surveillance system (routinely used) and the grout tremie line.
3.2.4.3.a	Residual Waste Quantities	Maximum residual will be 360 cu ft in tank 241-C-106 and 30 cu ft in 241-C farm 200-series tanks	This is an assumed initial condition.
3.2.4.3.b	Residual Waste Inventory	Best-basis inventory estimate	This is an assumed initial condition.
3.2.5	Transportability	Compatible with Hanford Site rigging and transport equipment	This requirement is conceptually met by using the portable grout plant and overground slickline for delivery of grout to the individual tanks.

APPENDIX D
LEVEL 2 SPECIFICATION COMPLIANCE MATRIX (11 SHEETS)

Level 2 Spec Section	Section Title	Applicable Requirement or Objective	Compliance Discussion
3.2.6	Flexibility and Expansion	Design features that allow operational flexibility between tank closures	This requirement is conceptually met with the grout delivery and placement system. The system is suitable for application to other tanks and allows for changes in the grout formulation.
3.3.1.1.a	Lead	No lead unless fully encapsulated and permanent tag	This will be addressed at the detail design phase.
3.3.1.1.b	Toxic Substance Control Act	No materials listed in Toxic Substance Control Act of 1976	This will be addressed at the detail design phase.
3.3.1.1.c	Ozone-Depleting Substances	Avoid ozone-depleting substances to remain exempt from HNF-IP-0842, Volume 6, Section 1.8, Requirements 7 & 8	This will be addressed at the detail design phase.
3.3.1.2	Decontamination and Decommissioning	Design for ease of decontamination during operations and decommissioning at end of life	This requirement is conceptually met through the grout delivery and placement system described in the report. The concept uses commercially available materials and equipment.
3.3.2	Electromagnetic Radiation	Comply with electromagnetic radiation emissions per HNF-2962	There are no anticipated electromagnetic radiation sources.
3.3.3	Nameplates, Product Markings, and Labels	Per tank farm labeling program per HNF-IP-0842, Volume 2, Section 6.1, Rev. 1; WAC 173-303-395(6); WAC 173-303-640(5)(d)	This requirement will be addressed at the detail design stage.

APPENDIX D
LEVEL 2 SPECIFICATION COMPLIANCE MATRIX (11 SHEETS)

Level 2 Spec Section	Section Title	Applicable Requirement or Objective	Compliance Discussion
3.3.5	Equipment Standardization	Lessons learned	This requirement will be addressed at the detail design stage.
3.3.6	Safety	Integrated Safety Management System	This requirement will be addressed at the detail design stage.
3.3.6.1.a	Occupational Radiological Protection	Personnel radiation protection per ALARA and HNF-5183	This requirement will be addressed at the detail design stage.
3.3.6.1.b	Occupational Safety and Health	OSHA Subparts D,E,G,H,J,L,M,O&S HNF-SD-WM-HSP-002	This requirement will be addressed at the detail design stage.
3.3.6.2.a	Materials and Design	Strength, waste compatibility and corrosion protection per WAC 173-303-640(3) and DOE M 435.1-1, Chapter 11, Sections Q(2)(a) and Q(2)(b)	This requirement will be addressed at the detail design stage.
3.3.6.2.b	Fire Protection	Fire protection per HNF-IP-0842, Volume 9, Sections 5.2 and 5.3	This requirement will be addressed at the detail design stage.
3.3.6.3.a	Spill Prevention and Controls	Spill prevent per 40 CFR 265.193, WAC 173-360-375, and WAC 173-303-640	This requirement will be addressed at the detail design stage.
3.3.6.3.b	Non-Radioactive Airborne Emissions	Requirements per WAC 173-400 and WAC 173-460	The Basis of Design report assumes that a non radioactive Notice of Construction will be prepared for agency review and approval.

APPENDIX D
LEVEL 2 SPECIFICATION COMPLIANCE MATRIX (11 SHEETS)

Level 2 Spec Section	Section Title	Applicable Requirement or Objective	Compliance Discussion
3.3.6.3.c	Radioactive Airborne Emissions	Requirements per WAC 246-247	The Basis of Design report assumes that a radioactive Notice of Construction will be prepared for agency review and approval.
3.3.6.3.d	Radiation Protection of the Public and Environment	Limit combined radioactive air emissions from all River Protection Project facilities per 10 CFR 20; WAC 246-247; and HNF-IP-0842, Volume 6, Section 1.7	This requirement will be addressed at the detail design stage and through the Notice of Construction.
3.3.6.3.e	Monitoring of Liquid Effluent Discharges to the Environment	Limit waste water discharges per HNF-IP-0842, Volume 6, Section 1.6 and Sate Waste Discharge Permits 4508, 4509, and 4510	This requirement is conceptually met by use of wastewater collection systems for treatment and disposition at Hanford Site facilities.
3.3.6.3.f	Flammable Gas Design Requirements	Components contacting waste to be designed and operated per NFPA 70 (Class 1, Division 1, Group B); NEC Articles 500 and 501, NFPA 77, NFPA 496 (Type X) Components in tank vapor space not contacting waste to be designed and operated per same requirements except NFPA 70 (Class 1, Division 2, Group B) and NFPA 496 (Type Z) apply	This requirement will be addressed at the detail design stage.

APPENDIX D
LEVEL 2 SPECIFICATION COMPLIANCE MATRIX (11 SHEETS)

Level 2 Spec Section	Section Title	Applicable Requirement or Objective	Compliance Discussion
3.3.7	Human Performance/Human Engineering	Ease of operations and analyzed for protection from operator error	This requirement will be addressed at the detail design stage.
3.3.8.1	Safety Basis Requirements	Technical safety requirements for work in vicinity of tanks HNF-SD-WM-TSR-006 (TSRAC 5.10, 5.16, and 5.22) and limiting conditions UTSRs for operation for cutting and capping of cascade line (LCO 3.1.4, 3.1.8, and 3.2.2; TSR AC 5.9, 5.10, and 5.11) with implementation details per HNF-IP-1266	This requirement will be addressed at the detail design stage.
3.3.8.2	Nuclear Safety Classification	The system shall be designed in accordance with safety classification	At end of conceptual design: safety classification per HNF-IP-0842, Volume 4, Sections 6.9 - 6.12 based on guidelines in HNF-SD-WM-SAR-067, Section 3.0 and supplemented by RPP-DI-ENG-002.
3.4.1	Engineering Documents	Controlled per HNF-PRO-222; developed per HNF-IP-0842, Volume 4, Section 1.2, Rev. 0c	This requirement will be addressed at the detail design stage.
3.5.1.1	Work Activities	Daily work activities per tank farm operations procedures and job control system	This requirement will be addressed at the detail design stage.

APPENDIX D
LEVEL 2 SPECIFICATION COMPLIANCE MATRIX (11 SHEETS)

Level 2 Spec Section	Section Title	Applicable Requirement or Objective	Compliance Discussion
3.5.2	Spares	Minimum number of spares	Performed during design; spares controlled per HNF-IP-0842, Volume 15, Section 7.4.
3.5.3	Solid Waste	Comply with HNF-IP-0842, Volume 18, Section 2.0 for generated solid waste	This requirement will be addressed at the detail design stage.
3.9.1	General system and Information Security	Design per HNF-IP-0842, Volume 12, Section 1.2	This requirement will be addressed at the detail design stage.
3.9.2	Radiation Area Security	Design such that access controls to radioactive and high radioactive areas meet HNF-5183 and HNF-IP-0842, Volume 7, Section 14.1	This requirement will be addressed at the detail design stage.

ALARA = as low as reasonably achievable.
CFR = *Code of Federal Regulations*.
DOE = U.S. Department of Energy.
HEPA = high-efficiency particulate air.
NEPA = *National Environmental Policy Act of 1969*.
TBD = to be determined.
WAC = Washington Administrative Code.

This page intentionally left blank.

APPENDIX E
GROUT DELIVERY/PLACEMENT EVALUATION CRITERIA AND CONCEPT SELECTION PROCESS

This page intentionally left blank.

CONTENTS

E1.0 INTRODUCTION E-1

E2.0 GROUT DELIVERY AND PLACEMENT REQUIREMENTS E-1

E3.0 DECISION CRITERIA E-1

E4.0 GROUT DELIVERY AND PLACEMENT ALTERNATIVES E-4
- E4.1 ASSUMPTIONS AND SYSTEM CONSTRAINTS E-4
- E4.2 GROUT DELIVERY AND PLACEMENT SYSTEM OPTIONS E-5
  - E4.2.1 Delivery to Site Options E-6
  - E4.2.2 Delivery to Tank Options E-10
  - E4.2.3 Placement for Stabilization Options E-13
- E4.3 BALANCE OF TANK FILL E-22

E5.0 EVALUATION E-23

E6.0 ALTERNATIVE SELECTION E-24

E7.0 REFERENCES E-25

ATTACHMENT

E1 MEETING MINUTES FROM REVIEW MEETING HELD 8/6/02 ..... E1-i

TABLES

E.1. Level 2 Specification Requirements for the Tank Fill System/Material E-2
E.2. Grout Delivery and Placement Concept Evaluation E-4
E.3. Grout Delivery to the Site E-23
E.4. Grout Delivery to the Tank E-23
E.5. Grout Placement Evaluation E-24

LIST OF TERMS

ATCD	Accelerated Tank Closure Demonstration
Columbia Energy	Columbia Energy and Environmental Services, Inc.
FY	fiscal year
MPI	Multi-Point Injection System™
SRS	Savannah River Site
SST	single-shell tank

E1.0 INTRODUCTION

Preliminary engineering efforts have been initiated in support of the Accelerated Tank Closure Demonstration (ATCD) Project. It has been assumed by the project that the five demonstration tanks would be closed in place with a two-phase grout fill for the tanks:

- In the first phase, the initial layer(s) of grout will be placed into the tanks to stabilize and encapsulate the residual waste heel in the tank.
- The second phase involves filling the remaining tank volume with structural fill to minimize water infiltration, prevent long-term degradation of the surface barrier due to subsidence, and discourage intruder access.

For the purpose of this Basis of Design report the bulk filling of the tank (Phase 2) would occur immediately following stabilization of the residual heel.

E2.0 GROUT DELIVERY AND PLACEMENT REQUIREMENTS

Tank Closure Fill System for the Accelerated Tank Closure Demonstration Level 2 Specification (RPP-11094) establishes the performance specifications for project definition and preliminary engineering of a tank closure fill system. The performance objectives defined in the Level 2 Specification are identified in Table E.1.

E3.0 DECISION CRITERIA

Decision Statement – Determine the most appropriate grout delivery and placement system concept for tank closure demonstrations that best meets the evaluation criteria.

Decision Process and Approach – The decision making process will involve participation from the key participants involved in the ATCD Project.

Decision Responsibilities – The decision maker for tank closure preliminary engineering is the CH2M HILL Hanford Group, Inc. buyer's technical representative or his delegate. At the conclusion of the review and comment meeting the Columbia Energy and Environmental Services, Inc. (Columbia Energy) Project Manager will develop a recommendation for concurrence by the CH2M HILL Hanford Group, Inc. buyer's technical representative.

Decision Strategy – The decision strategy involves development and evaluation of a reasonable range of alternatives for the delivery and placement of grout into the closure demonstration tanks. Review of concepts developed at other U.S. Department of Energy sites and brainstorming sessions will be used to identify a range of alternatives for delivery and placement of the grout. The results of an initial evaluation will be the subject of a review meeting to walk through the evaluation and ranking of the alternatives. It is expected that one grout delivery and placement concept will be selected for further development in preliminary engineering. Meeting minutes will be prepared and attached to this appendix as Attachment E1.

Table E.1. Level 2 Specification Requirements for the Tank Fill System/Material

Description	Source	Requirement	Preliminary Engineering Requirement/Interpretation
Residual waste stabilization material formulation, properties, and fill test requirements	RPP-11094 Section 3.1.2	TBD	Stabilization material physical properties will be assumed for preliminary engineering purposes. The basic assumption is that the grout material used to stabilize the heel will be a flowable fill with low compressive strength.
Waste heel stabilization material - function	RPP-11094, Section 3.1.2.1	Material shall be placed in contact with residual waste on the tank bottom to minimize risk of contaminant migration. Methods for minimizing risk of contaminant migration include liquid absorption, waste encapsulation, cementitious bonding of waste and stabilization material, or chemical interaction with key contaminants.	Based on the Level 2 Specification there is no requirement to microencapsulate the waste heel with the grout.
Stabilization structural properties	RPP-11094, Section 3.1.2.2	Materials shall have sufficient structural capacity to support succeeding lifts of tank fill material and the surface barrier provided at the time of final tank farm closure.	The structural capacity requirement is balanced against the retrievability requirement. Assume that the 50 to 250 lb/in^2 compressive strength limit for retrievability is sufficient to meet structural requirements. This assumption will be verified during detailed design. The structural capacity is a function of the grout formulation to be developed by others.
Retrievability	RPP-11094, Section 3.1.2.3	Materials shall have low compressive strength to facilitate removal if decisions on final tank farm closure preclude placement of subsequent lifts of tank fill material.	Retrievability will be maintained by using a low strength mix for stabilizing the waste heel. A low-strength mix will be assumed in the 50 to 250 lb/in^2 range. Physical properties of the waste stabilization grout will be based on grout formulation work to be performed by others.
Tank fill material	RPP-11094, Section 3.1.3.1	Fill material to be placed over the waste heel stabilization material.	Tank fill material is assumed to be a zero-bleed, flowable, self-leveling formulation that provides sufficient structural strength for tank closure. A fill material formulation will be assumed pending grout formulation work to be performed by others.

Decision Criteria – The decision criteria used to select a single grout delivery and placement concept for use in preliminary engineering are defined in the following paragraphs. Decision criteria used should be measurable, independent from other criteria, and conducive to ranking and scoring.

The preliminary decision criteria for use in selecting a recommended grout delivery and placement system include:

- Safety – Safety issues to be considered include construction, operation, and demobilization of the grout delivery and placement system. A low score would correspond to significant safety concerns and/or the requirement to design and implement engineering controls. A high score would correspond to a system that has limited safety concerns.

- Compliance with technical requirements – The degree of compliance is assigned a value (1=low, 2=medium low, 3=medium, 4=medium high, 5=high) corresponding to the expected performance of the system relative to the technical requirements.

- Operability – The ease and/or difficulty in operating a given system is assigned a value with a lower value corresponding to a difficult and a higher value corresponding to an easy system to operate.

- Technical risk – Technical risk criteria provide a means to measure the level of confidence that a given concept will work. A low value corresponds to a low level of confidence while a high value corresponds to a high level of confidence (i.e., the system has been deployed either in U.S. Department of Energy or commercial applications).

- Programmatic risk – A programmatic risk value is assigned based on the potential for changes in program direction to affect the closure approach. The principal issues to be considered under programmatic risk are the requirements for in-tank waste treatment (i.e., microencapsulation, macroencapsulation, in situ chemical treatment, or a combination of chemical treatment and encapsulation).

- Deployment schedule risk – The potential for deployment of a given concept on a schedule that is compatible with the overall ATCD Project schedule is assigned a value based on the level of confidence (high= 5, medium high=4, medium=3, medium low=2, low=1) in meeting project schedule constraints.

- Cost – A cost value is assigned based on engineering judgment for the life cycle cost (capital and operating) of an option.

For each grout delivery and placement system concept the individual decision criteria will be assigned a value from 1 to 5. A weighting factor between 1 and 5 will be developed for each of the decision criteria and a weighted score will be calculated for each option based on the raw score and the weighting factor. These weighted scores will then be added together and the options will be ranked based on numerical value. Table E.2 provides a sample evaluation form.

Table E.2. Grout Delivery and Placement Concept Evaluation

	Safety	Compliance with Technical Requirements	Operability	Technical Risk	Programmatic Risk	Deployment Schedule	Cost	Total
Raw Scores								
Option A								
Option B								
Option C								
Weighted Scores								
Weighting Factor								
Option A								
Option B								
Option C								

E4.0 GROUT DELIVERY AND PLACEMENT ALTERNATIVES

E4.1 ASSUMPTIONS AND SYSTEM CONSTRAINTS

To evaluate options for grout delivery and placement systems a number of assumptions and system constraints warrant identification. These assumptions and constraints include the following:

- Each of the tanks will be retrieved to the *Hanford Federal Facility Agreement and Consent Order* (HFFACO; Ecology et al. 1989) interim retrieval goal of 360 ft^3 (tank 241-C-106) and 30 ft^3 for each of the 200-series tanks. Following retrieval the residual waste will consist of wet solids; however, there will be minimal free liquid.

- Provisions for placement of dry grout mix in the tank to absorb liquids are not included in the preliminary design, instead the final grout formulation will be tailored to account for liquids in the tank. Grout mix formulation will also evaluate use of chemical getters in the waste stabilization grout.

- The project schedule for field deployment of the grout stabilization for tank 241-C-106 is from February through March 2004.

- The project schedule for field deployment of the grout stabilization for tanks 241-C-201, 241-C-202, 241-C-203, and 241-C-204 follows the first deployment, is dependent on the retrieval schedule, and must be completed by January 30, 2004.

- The volume of grout needed to stabilize the waste residual is yet to be determined; however, it is assumed that stabilization of the residual waste would be accomplished with a 10 to 12 inch layer of stabilizing material. This volume would result in a nominal 10% waste loading in the stabilizing grout.

- In-tank equipment will be encapsulated in the grout.

- Ready access for each of the tanks is available at the center or near-center riser. Additional access, if required, would involve removal of equipment from another riser(s).

- The stabilizing grout is an adaptation of the Savannah River Site (SRS) all-in-one zero bleed reducing fill/grout system with the mix proportions adjusted to meet the retrievability criteria. This formulation can be readily pumped, is self leveling, and produces no bleed water.

E4.2 GROUT DELIVERY AND PLACEMENT SYSTEM OPTIONS

The following outline the grout delivery and placement system options.

Delivery to site

1. Premix trucks from town at 8-10 yards each
2. Dry material delivered to a batch plant on or near site plus trucking to the tank farm
3. Batch plant located at the tank farm (no trucking)
4. Continuous batching and mixing plant at the tank farm

Delivery to the tank

1. Truck delivery to the tank riser (premix trucks)
2. Pump grout from outside the tank farm through a slickline
3. Pump grout from outside the tank farm by boom pump truck

Placement of Waste Stabilization Grout

1. Gravity fill with tremie from one location single lift (macroencapsulate between grout layer and tank structure, no attempt to microencapsulate)

2. Gravity fill with tremie from one location in two lifts (i.e., attempt to macroencapsulate between grout layers)

3. Gravity fill with tremie from one location, multiple lifts (attempt to mix and microencapsulate)

4. Gravity fill with tremie from multiple locations using two or more lifts (i.e., attempt to macroencapsulate)

5. Single-point injection with low pressure grout (less than 350 lb/in^2)

6. Multi-Point Injection System™ (MPI) with high pressure grout (approximately 6,000 lb/in^2)

7. In-tank mechanical mixing using robotic mixers

8. In-tank mixer pump

Placement of Tank Fill Grout

1. Gravity fill with tremie from one location, multiple lifts as required to limit temperature.

E4.2.1 Delivery to Site Options

The following sections define the delivery to site options of (1) premix trucks from offsite batch plant, (2) premix trucks from central onsite batch plant, (3) local portable onsite batch plant, and (4) local portable continuous mixing plant

E4.2.1.1 Premix Trucks from Offsite Batch Plant

A local, commercially operated concrete batch plant would be contracted to provide grout batching. Pre-mix concrete trucks would mix and transport the grout to the Hanford tank farms. Nominally, a premix truck holds 8 cubic yards (1,600 gallons) of concrete. For a nominal grout placement lift of 10 inches for residual waste stabilization, approximately 18 premix trucks are required for tank 241-C-106, and 2 premix trucks are required for a 241-C farm 200-series tank. The premix trucks would need to be flushed after grout delivery. Facilities for truck flushing, wastewater collection, and disposal would be provided by the Hanford Site. Also, facilities for dumping a load of grout that cannot be delivered to the tank due to mechanical failure, administrative hold, or other production interruption would have to be provided by the Hanford Site.

The internal volume of tank 241-C-106 is approximately 760,000 gallons with a nominal operating capacity of 530,000 gallons. Excluding risers and in-tank equipment, approximately 475 premix trucks would be required to fill tank 241-C-106. The 241-C farm 200-series tanks have an approximate internal volume of 60,000 gallons. Again excluding risers and in-tank equipment, each 241-C farm 200-series tank would require approximately 38 premix truck loads to fill the tank.

Safety: This option requires a large number of concrete trucks to transport the grout over roadways that provide the only access to the Hanford Site from the Richland area. The main travel route also serves as the primary access to the Hanford Site's 300 and 400 Areas and Energy Northwest's Columbia Generating Station. Other Hanford Site construction activities including the Waste Treatment Plant, environmental remediation activities, and Hanford tank farm upgrades will continue to burden these access routes with heavy truck traffic. For tank residual waste stabilization activities, delivery of the grout could be scheduled such that most of the premix trucks would not be at peak traffic times. However, the production schedule would likely require grout delivery at peak traffic times during tank fill operations.

Compliance with Technical Requirements: Mixing and delivery of cementitious mixtures in premix trucks is a common industrial practice. This method provides a high confidence that the grout will be delivered to the site within the specified grout mix requirements.

Operability: Transportation delays due to congested traffic or due to random searches at the Hanford Site guard gate could result in unacceptable delays in placement of the grout in the tank or rejection of the load at the delivery point. Flushing of the delivery system to the tank will be required by excessive delays in truck arrival, causing further interruptions in production. Due to the travel time from an offsite batch plant and time limits from mixing to placement of the grout, delays in delivery of the grout to the tank due to mechanical failure or administrative hold could result in the need to dump multiple truck loads of grout and further schedule delays.

Grout injection technologies introduce a large volume of grout in a short time span. The logistics of supplying such a large volume of grout in the short operational duration using premix trucks would be problematic.

Technical Risk: The properties of the wet grout mixture are time dependent. Delays in transport of the grout due to congested traffic during peak traffic times or due to random searches at the Hanford Site guard gate could result in rejection of the premix truck load of grout at the delivery point.

Programmatic Risk: None identified.

Deployment Schedule Risk: None identified.

Cost: The only capital cost for this option is for a suitable location for dumping rejected grout loads and for a high capacity truck flushing and wastewater collection facility. Operating costs could be high due to idle time from delays in transportation and dumping of rejected loads of grout.

E4.2.1.2 Premix Trucks from Central Onsite Batch Plant

A grout batch plant would be erected on the site for operation by tank farms personnel. The batch plant would be centrally located between the 200 West and the 200 East tank farms and would be a dedicated facility with a 30-year design life to service closure of all of the Hanford waste storage tanks. Premix trucks would mix and transport the grout to the tank farms. The number of premix trucks required for stabilization and tank fill is as described in the Premix Trucks from Offsite Batch Plant option (Section E.4.2.1.1). The batch plant would require site services including electrical power and water. Dry grout mix components would be trucked to the batch plant from offsite suppliers. A centralized facility for truck flushing, wastewater collection, and disposal would be required. Also, facilities for dumping a load of grout that cannot be delivered to the tank due to mechanical failure, administrative hold, or other production interruption would have to be provided by the Hanford Site.

Safety: This option would require approximately one-third fewer trucks on the primary Hanford Site access routes from the Richland area compared to the option with an offsite batch plant, but would require the same number of trucks for delivery of the wet grout to the tank farms. The trucks traveling from the Richland area would supply the dry grout mix ingredients to storage silos at the batch plant with deliveries scheduled for non-peak traffic periods.

Compliance with Technical Requirements: Mixing and delivery of cementitious mixtures in premix trucks is a common industrial practice. This method provides a high confidence that the grout will be delivered to the site within the specified grout mix requirements.

Operability: The onsite batch plant would be operated by Hanford Site personnel and would be subject to limiting conditions of existing labor agreements and air operating permits.

Due to time limits from mixing to placement of the grout, delays in delivery of the grout to the tank due to mechanical failure or administrative hold could result in the need to dump multiple truck loads of grout and schedule delays.

Grout injection technologies introduce a large volume of grout in a short time span. The logistics of supplying such a large volume of grout in the short operational duration using premix trucks would be problematic.

Technical Risk: None identified.

Programmatic Risk: Receiving authorization for a capital construction project within the schedule parameters for the residual waste stabilization phase of tank closure is unlikely. If application of grout technology for closure of the balance of the Hanford Site tanks is not approved, a large investment in both capital equipment and employees will be a liability.

Deployment Schedule Risk: This would be a capital construction; obtaining project authorization, plant siting, plant construction and operating permits, qualified construction employees, and operations employee training within schedule parameters is not reasonable for the residual waste stabilization phase of tank closure.

Cost: Capital costs would be high for this option and would include the batch plant and the premix trucks. Transportation of the dry grout mix materials would be provided by the offsite vendors of such materials. Operations costs would also be high for this option as the operation of the batch plant and premix trucks would be by Hanford Site personnel per existing Hanford Site labor agreements.

This option also requires consideration of maintenance and decommissioning costs. There may be a number of years between the tank closure demonstration and the next closure operation. The batch plant would have to be maintained during periods of non-production and the plant operators and support personnel would have to be temporarily reassigned to other projects.

E4.2.1.3 Local Portable Onsite Batch Plant

A portable grout batch plant would be mobilized at a staging area adjacent to the tank farm in a non-radiologically controlled area. The portable batch plant would include portable generators that would provide the needed electrical power. Site services would provide water to the batch plant. Dry grout mix components would be trucked to the batch plant from offsite suppliers. The batch plant would need to be flushed after completion of, or extended delay in, the grout production campaign. Facilities for waste water collection and disposal would be provided by the Hanford Site. Also, facilities for dumping a load of grout that cannot be delivered to the tank due to mechanical failure, administrative hold, or other production interruption would have to be provided by the Hanford Site.

Safety: This option would require approximately one-third fewer trucks on the primary Hanford Site access routes from the Richland area compared to the option with an offsite batch plant. With a local batch plant, trucking of the wet grout can be eliminated entirely by delivering to the tank by a slickline or a boom pump truck, but would require the same number of premix trucks as the offsite or central onsite batch plants if the preferred delivery option to the tank is by premix trucks. Offsite trucks would supply the dry grout mix ingredients to storage silos at the batch plant with deliveries scheduled for non-peak traffic periods.

Compliance with Technical Requirements: The grout may be either batched into a premix truck for mixing and delivery to the tank or batched and mixed at the batch plant for pumped delivery to the tank; both are common industrial practices, providing a high confidence that the grout will be delivered to the tank within the specified grout mix requirements.

Operability: Due to time limits from mixing to placement of the grout, delays in delivery of the grout to the tank due to mechanical failure or administrative hold could result in the need to dump batch loads of grout and flush the wet side of the batch plant causing additional schedule delays.

For the residual waste stabilization phase of the tank closure demonstration, an offsite vendor would provide all batch plant equipment and provide all operating personnel. For the tank fill phase of the closure demonstration and future closure operations, capital equipment acquisition operated by Hanford Site personnel should be considered.

Technical Risk: None identified.

Programmatic Risk: None identified.

Deployment Schedule Risk: None identified.

Cost: A vendor will be contracted to provide a service including all equipment to perform that service. As such, there are no capital costs or employee-related operational costs for the stabilization phase of the tank closure demonstration.

Operational costs associated with dumping a batch of grout due to production interruptions should be limited with a local batch plant.

E4.2.1.4 Local Portable Continuous Mixing Plant

A portable continuous mixing plant will be mobilized at a staging area adjacent to the tank farm in a non-radiologically controlled area. The continuous mixing plant would include portable generators that would provide the needed electrical power. Site services would provide water to the mixing plant. Dry grout mix components would be trucked to the mixing plant from offsite suppliers. Water is added to the mix of dry components in a hopper that feeds the discharge pump. The discharge pump and its feed hopper would need to be flushed after completion of or extended delay in the grout production campaign. Facilities for waste water collection and disposal would be provided by the Hanford Site. The continuous mixing operation does not require the collection of large volumes of wet grout; therefore, facilities for dumping a load of grout are not required.

Safety: This option would require approximately one-third fewer trucks on the primary Hanford Site access routes from the Richland area compared to the option with an offsite batch plant. With a local continuous mixing plant, trucking of the wet grout can be eliminated entirely by delivering to the tank by a slickline or a boom pump truck, but would require the same number of premix trucks as the offsite or central onsite batch plants if the preferred delivery option to the tank is by premix trucks. The trucks traveling from the Richland area would supply the dry grout mix ingredients to storage silos at the continuous mixing plant with deliveries scheduled for non-peak traffic periods.

Compliance with Technical Requirements: A continuous mixing plant is a common industrial practice, providing a high confidence that the grout will be delivered to the tank within the specified grout mix requirements.

Operability: Because the continuous mixing plant requires no storage of wet grout, delays in delivery of the grout to the tank due to mechanical failure or administrative hold would not result in the need to dump batch loads of grout, but extensive delays would require flushing of the mixing hopper and discharge pump. Flushing of the wet side of the continuous mixing plant is a relatively simple operation that is unlikely to cause additional schedule delays.

For the residual waste stabilization phase of the tank closure demonstration, an offsite vendor would provide all continuous mixing plant equipment and provide all operating personnel. For the tank fill phase of the closure demonstration and future closure operations, capital equipment acquisition operated by Hanford Site personnel should be considered.

Technical Risk: None identified.

Programmatic Risk: None identified.

Deployment Schedule Risk: None identified.

Cost: A vendor will be contracted to provide a service including all equipment to perform that service. As such, there are no capital costs or employee-related operational costs for the stabilization phase of the tank closure demonstration.

E4.2.2 Delivery to Tank Options

The following sections define delivery to tank options (1) truck delivery to tank riser, (2) pipeline from outside of the tank farm, and (3) boom pump truck.

E4.2.2.1 Truck Delivery to Tank Riser

Premix trucks would enter the tank farm radiologically controlled area along predetermined and controlled travel paths to be staged adjacent to the tank. The grout delivery chute would be positioned above the receipt hopper and the load would be discharged. Upon delivery of the load, the truck would move along predetermined and controlled travel paths to the tank farm exit staging area for a radiological survey and decontamination, as required. When cleared for exit from the radiologically controlled area, the truck would travel to the flushing facility for removal of residual grout within the truck. A truck decontamination facility with collection of radiologically contaminated decontamination fluids would need to be erected within the tank

farm radiologically controlled area. Transport or piping of the contaminated fluids to the onsite treatment and disposal facility would need to be provided.

Safety: Strict dome loading requirements are in place for all Hanford tanks. Designated travel paths for the heavy premix trucks would have to be established and controlled. The potential for human error likely will require failsafe and redundant systems and constraining administrative controls to allow entry into the tank farm.

The potential for contamination spread is high given the required number of trucks and the frequency of access. Contamination spread and waste generation is also likely due to the potential of spillage associated with chute positioning and delivery of the grout.

This method of grout delivery requires a relatively large number of employees in the radiologically controlled area including the truck driver who would remain in the truck cab due to entry and exit requirements, truck spotters, workers to position and clean the grout chute, and Health Physics Technicians to survey the trucks before exiting the radiologically controlled area.

Compliance with Technical Requirements: Mixing and delivery of cementitious mixtures in premix trucks is a common industrial practice. This method provides a high confidence that the grout will be delivered to the site within the specified grout mix requirements.

Operability: There are several operability difficulties associated with entering the radiologically controlled area as discussed in the section addressing safety.

Schedule delays are very likely with this option due to entry and exit requirements of a radiologically controlled area. Should a premix truck become contaminated, extended production delays are certain.

Grout injection technologies introduce a large volume of grout in a short time span.
The logistics of supplying such a large volume of grout in the short operational duration using premix trucks would be problematic.

Technical Risk: None identified.

Programmatic Risk: Completing the safety case analyses and obtaining the safety authorization basis modifications necessary to allow the premix truck to drive into the tank farm may be difficult to achieve within the constraints of the schedule.

Deployment Schedule Risk: None identified.

Cost: Operations costs are high for this option due to extensive operations within the radiologically controlled area. Capital costs are moderately high due to the need for a truck exit staging area and decontamination facilities.

E4.2.2.2 Pipeline from Outside of the Tank Farm

A grout slickline would be constructed from the grout pump located adjacent to and outside of the radiologically controlled area fence to the tank riser. The slickline consists of 10-foot sections clamped together and placed on grade and would cross the radiological control barrier.

Scaffolding support may be required adjacent to the riser pit and other locations that the ground does not provide continuous support of the slickline. Grout would be fed into the pump feed hopper and pumped to the tank riser. Flushing of the pump and slickline would be required at the completion of a grouting campaign or upon extended delays. The slickline flush water would be discharged into the single-shell tank (SST). The pump would be removed to the flushing facility for extensive flushing.

Safety: Operations within the radiologically controlled area are limited to construction of the slickline.

Compliance with Technical Requirements: Pumping of concrete through a slickline is common industrial practice and was used for tank closure at the SRS, providing a high confidence that the grout will be delivered to the tank within the specified grout mix requirements.

Operability: This method of grout delivery to the tank provides flexibility in operations from outside the radiologically controlled area.

Because the slickline delivery method requires no storage of wet grout, delays in delivery of the grout to the tank due to mechanical failure or administrative hold would not result in the need to dump batch loads of grout, but extensive delays would require flushing of the pump and slickline. Flushing of the pump and slickline is a relatively simple operation with the flush water being discharged into the SST. This method of delivery is unlikely to cause additional schedule delays.

Technical Risk: None identified.

Programmatic Risk: None identified.

Deployment Schedule Risk: None identified.

Cost: Capital costs are limited to that for the slickline and the pump. Both of these components can be reused on future closure operations. The slickline within the radiologically controlled area may become contaminated, but contamination would not preclude reuse in other contaminated environments.

The slickline would be constructed in the radiologically controlled area. Slickline construction is relatively simple; consisting of 10-foot sections of pipe that are clamped together and laid on grade with local scaffolding support as required. Construction costs are expected to be low.

There are limited operations associated with a slickline delivery method. Operation costs are low.

E4.2.2.3 Boom Pump Truck

A boom pump truck would be staged adjacent to and outside of the tank farm radiologically controlled area fence. The boom would reach over the radiological control barrier with the discharge positioned above a receipt hopper at the tank riser. Grout would be delivered to the hopper on the boom pump truck and discharged into a receipt hopper at the tank riser. The boom

would need to be flushed after completion of a grouting campaign or upon extended production delays. Flush water would be discharged into the SST or the boom could be repositioned to a flush water receipt tank located outside of the radiologically controlled area.

All of the tanks selected for the closure demonstration (tanks 241-C-106, 241-C-201, 241-C-202, 241-C-203, and 241-C-204) are located along the west side of the tank farm. The central riser of tank 241-C-106 and the 241-C farm 200-series tanks are located approximately 140 and 40 feet, respectively, from the radiologically controlled area fence. Boom pump trucks with a horizontal reach up to 157 feet are commercially available.

Due to the limited reach, the boom pump truck option is not a valid option if the grout is to be placed in the tank through multiple risers near the tank wall. Also due to the limited reach capability, this option is applicable to future tank closure operations. For example, grout could not be delivered to tank 241-C-105 using the boom pump truck option as described here.

Safety: There is a potential for contamination spread and waste generation due to the potential of spillage associated with movement of the boom. Boom placement of concrete is common in the construction industry with known and acceptable personnel hazards.

Compliance with Technical Requirements: Boom pump delivery of cementitious mixtures is a common industrial practice, providing high confidence that the grout will be delivered to the site within the specified grout mix requirements.

Operability: Personnel within the radiologically controlled area would be required for positioning of the boom. The boom may be required to be removed from the radiologically controlled area to effect flushing.

Because the boom pump delivery method requires no storage of wet grout, delays in delivery of the grout to the tank due to mechanical failure or administrative hold would not result in the need to dump batch loads of grout, but extensive delays would require flushing of the boom pump. Flushing of the boom pump may require moving the boom out of the radiologically controlled area. This method of delivery is unlikely to cause significant schedule delays.

Technical Risk: None identified.

Programmatic Risk: None identified.

Deployment Schedule Risk: None identified.

Cost: A vendor will be contracted to provide a service including all equipment to perform that service. As such, there are no capital costs for the stabilization phase of the tank closure demonstration. Workers inside the radiologically controlled area are required for positioning of the boom.

E4.2.3 Placement for Stabilization Options

The following sections define the placement for stabilization options (1) single location, single lift using a tremie; (2) single location, two lifts using a tremie; (3) single location, multiple lifts

using a tremie; (4) multiple locations, multiple lifts using a tremie; (5) single-point injection with low pressure grout; (6) high-pressure mixing using MPI; (7) in-tank-mechanical mixing using robotic mixers; and (8) in-tank mixer pump.

E4.2.3.1 Single Location, Single Lift Using a Tremie

Free-flowing grout would be placed into the tank via the central tank riser using a tremie to limit the drop height. A single lift of approximately 10 inches in depth would be placed over the residual waste, providing macroencapsulation of the residual waste by sandwiching it between the existing tank structure and the 10-inch-thick layer of grout.

Safety: There are no safety implications identified for this option.

Compliance with Technical Requirements: This option provides macroencapsulation of the residual waste between the tank structure and the stabilizing grout layer. The grout contacts the residual waste at a single interface surface on top of the residual waste. Some incidental mixing of the grout with the residual waste occurs during the single grout placement campaign.
This method provides limited contact and thus limited microencapsulation of the residual waste. Capture and chemical bonding of the constituents of concern is would be limited to the contact surface.

Retrievability of the waste under this option is high due to the relatively low volume of stabilizing material.

Operability: No operability concerns have been identified for this option.

Technical Risk: Placing the grout from a single location could displace the residual waste out to the walls of the tank, thereby not encapsulating the residual waste.

Programmatic Risk: Macroencapsulation using a single cover layer of grout may not meet regulatory approval.

Deployment Schedule Risk: None identified.

Cost: No discriminating costs.

E4.2.3.2 Single Location, Two Lifts Using a Tremie

Free-flowing grout would be placed into the tank via the central tank riser using a tremie to limit the drop height. The density of the grout for the initial lift would be greater than that of the residual waste such that the residual waste not fixed to the tank floor would be displaced above the approximate 10-inch-thick grout layer. A second layer of grout having a density less than that of the residual waste would be placed over the residual waste, providing macroencapsulation of the residual waste by sandwiching it between the two 10-inch-thick layers of grout.

Safety: There are no safety implications identified for this option.

Compliance with Technical Requirements: This option provides macroencapsulation of the residual waste between the two layers of stabilizing grout. The grout contacts the residual waste at two interface surfaces, above and below the residual waste. Some incidental mixing of the

grout with the residual waste occurs during both of the grout placement campaigns. This method provides limited contact and thus limited microencapsulation of the residual waste. Capture and chemical bonding of the constituents of concern is would be limited to the contact surface.

Retrievability of the waste under this option is moderate due to the volume of stabilizing material.

Operability: No operability concerns have been identified for this option.

Technical Risk: Displacement of the residual waste is dependent on its physical properties and the amount of waste that is fixed to the floor. This method may result in incomplete encapsulation between the two grout layers.

The second layer of grout may displace the residual waste instead of providing an encapsulating cover layer. This is especially a concern if the residual waste contains excess liquid.

Programmatic Risk: Macroencapsulation between two layers of grout may not meet regulatory approval.

Deployment Schedule Risk: None Identified.

Cost: No discriminating costs.

E4.2.3.3 Single Location, Multiple Lifts Using a Tremie

Free-flowing grout would be placed into the tank via the central tank riser using a tremie to limit the drop height. The density of the grout would be greater than that of the residual waste such that the residual waste which is not fixed to the tank floor would be displaced or floated above the approximate 10-inch-thick grout layer. Successive layers of grout also having a density greater than that of the residual waste would be placed over the residual waste. Each successive 10-inch-grout layer would capture a portion of the residual waste at the grout to residual waste interface and upon multiple lifts would provide encapsulation of the residual waste simulating microencapsulation of a homogeneously mixed waste form.

Safety: There are no safety implications identified for this option.

Compliance with Technical Requirements: The grout contacts the residual waste at interface surfaces between successive layers of grout. Some incidental mixing of the grout with the residual waste occurs during each of the grout placement campaigns. This method provides microencapsulation of the residual waste through multiple contact surfaces. Constituents of concern are captured and chemically bonded to the grout through a large contact surface area.

Retrievability of the waste under this option is relatively poor due to the large volume of stabilized waste form.

Operability: No operability concerns have been identified for this option.

Technical Risk: Displacement of the residual waste is dependent on its physical properties. This method may result in macroencapsulation between multiple layers of grout as opposed to achieving microencapsulation at the contact surfaces.

Programmatic Risk: Retrievability of the stabilized residual waste may not meet regulatory approval due to the large volume of the stabilized waste form. As discussed in the technical risk, microencapsulation may not be achieved and macroencapsulation between multiple layers of grout may not meet regulatory approval.

Deployment Schedule Risk: None identified.

Cost: *No discriminating costs.*

E4.2.3.4 Multiple Locations, Multiple Lifts Using a Tremie

Non-free-flowing grout would be placed into the tank at several locations near the tank wall in a star pattern using a tremie to limit the drop height. The density of this grout would be greater than that of the residual waste such that the residual waste would be displaced toward the center of the tank. A cover layer of free-flowing grout having a density less than that of the residual waste would be placed over the residual waste, providing macroencapsulation of the residual waste by surrounding it between the grout placed at the wall of the tank and the cover layer of grout. The cover layer would be free-flowing grout placed into the tank via the central tank riser using a tremie to limit the drop height. This option is only applicable to tank 241-C-106 due to the limited riser access in the 241-C farm 200-series tanks. Also, grout delivery by a boom pump truck is not applicable to this option.

Safety: Multiple tank access risers are required for placement of the grout. Personnel would receive additional exposure for accessing and preparation of the risers for receiving the grout and during repositioning the grout delivery to each of the risers during grout placement.

Compliance with Technical Requirements: This option provides macroencapsulation of the residual waste; between the tank structure on the bottom, the grout placed at the walls of the tank, and the grout cover layer. The grout contacts the residual waste at interface surfaces surrounding the residual waste. Some incidental mixing of the grout with the residual waste occurs during each of the grout placement campaigns. This method provides moderate contact and thus moderate microencapsulation of the residual waste. Capture and chemical bonding of the constituents of concern is would be limited to the contact surface.

Retrievability of the waste under this option is moderate due to the volume of stabilizing material.

Operability: Operability concerns for this option are limited to the need for personnel within the radiologically controlled area to relocate the grout delivery system.

Technical Risk: Displacement of the residual waste is dependent on its physical properties. This method may result in macroencapsulation similar to a single lift from a single central location.

Programmatic Risk: Macroencapsulation by surrounding grout may not meet regulatory approval. As discussed in technical risk, the residual waste may not be displaced, resulting in macroencapsulation by a single grout cover that may not meet regulatory approval.

Deployment Schedule Risk: None identified.

Cost: Construction costs are higher for this option due to the need of preparing and accessing multiple tank risers. Operational costs are slightly higher than the other options due to repositioning the grout delivery to the multiple risers.

E4.2.3.5 Single-Point Injection with Low-Pressure Grout

Single-point injection with low-pressure grout (less than 350 lb/in^2) is a concept based on bench scale testing conducted by Pacific Northwest National Laboratory. In the tests grout was introduced to the tank through a horizontally oriented nozzle for the purpose of mixing a surrogate sludge waste with the grout to create a waste form that microencapsulated the waste. Three grout injection tests were conducted. Nozzle diameters of 0.5 and 0.875 inches were used at pressures ranging from 117 to 307 lb/in^2 and grout flow rates from 65 to 138 gal/min. Each test was conducted in a 9 foot diameter tank with the nozzle on one side of the tank. In each test 2 inches of kaolin clay paste was placed on the tank floor and covered with 4 inches of water. The test results were better than expected and the effective cleaning radius of the grout injection system which was originally estimated at 9 feet was adjusted to 16 feet when density and maximum flow rates were accounted for.

After injection the grout was allowed to set and the grout monolith was broken up for evaluation. In all three test cases the single-point injection was very effective at mobilizing the sludge and mixing with the grout. It was concluded that this system should be scaled up to potential use in the 75-foot-diameter SSTs. Extrapolation of the experimental data to a 75-foot-diameter tank result in nozzle diameter and flow rates of approximately 1.4 inches and 740 gal/min. As an alternative, two to three injection locations could be used to provide coverage of the tank bottom. Note that the operating parameters of the configuration tested are suitable for deployment in the 200-series tanks.

To accommodate the injection rate of 740 gal/min, a continuous batch plant with this capacity would be required.

Deployment of this type of system in the tanks would provide for a moderate to high degree of success in macroencapsulating/microencapsulating the residual waste.

Safety: Operation of this system would involve injecting grout into the tank at relatively high rates and low pressures. Worker safety issues would be a concern and would require evaluation during design with potential controls to reduce the potential for accidents. Safety issues with the tank structure should be minor at the grout injection pressure.

Compliance with Technical Requirements: Single-point injection with low-pressure grout would exceed the Level 2 Specification (RPP-11094) requirement for contact of the grout with the residual waste.

Operability: Operation of the single-point injection system would require rotation of the nozzle to ensure coverage of the mixing stream over the bottom of the tank.

Technical Risk: Given the requirements, there is little technical risk associated with if or how well the system mixes the waste with the grout. Even without development and testing the system could be designed to provide some degree of beneficial mixing. If mixing the grout with the residual waste were required, then the technical risk would center around how well the system is able to mix the waste residuals with the grout material. The technical risk would be mitigated through additional development and cold testing to optimize the grout flow rate and nozzle diameter to achieve the necessary cleaning radius.

Programmatic Risk: Since this technology provides for mixing of the residual waste with the grout matrix there is little programmatic risk. The grout formulation can be tailored to include chemical treatment (i.e., getters) and the single-point injection system can be used to demonstrate that efforts are being made to create a waste form that encapsulates the waste from the environment.

Deployment Schedule Risk: Application of the single-point injection with low-pressure grout would require development and testing in fiscal year (FY) 2003 to define design and operating parameters. Development and testing activities would need to occur early in FY 2003 to ensure data is available to support design efforts. There would be a moderate deployment schedule risk associated with deployment of this technology. However, the design could be developed with currently available information and data collected as a part of the demonstration effort. Even if the technology is not 100% effective at mixing the residual waste with the grout, it would provide for mixing of the waste with the grout in the center portion of the tank and would serve as a grout delivery tool.

Cost: Cost considerations associated with the single-point injection system include additional design, construction, and operations associated with grout placement. The single-point injection system would be moderately more complicated than the gravity fill system.

E4.2.3.6 High Pressure Mixing using Multi-Point Injection System™

The MPI is a patented technology exclusively licensed to Ground Environmental Services, Inc. The MPI system is a high-energy grouting system designed to microencapsulate residual waste remaining in tanks. The MPI system relies on the interaction of multiple, high-speed mono-directional jets to turbulently mix the waste with grout (ORNL/TM-2000/8). The jet nozzles are placed near the bottom of the tank and oriented to project the jet streams horizontally. For shallow tank sludge (i.e., 2 to 3 feet), the injection tools do not need to be lifted to achieve mixing.

Placement of the jetting tools within a large-diameter tank can be accomplished by drilling small diameter holes through the dome of the tank for deployment of vertical jetting tools or, optionally, all tooling can be deployed through a single tank riser.

Deployment of a MPI system through a single riser in the center of a large-diameter (85 foot) SRS tank has been considered. The configuration involved placement of 18 tool strings oriented radially from the center of the tank out similar to the spokes of a wheel. Each tool string would

have approximately 20 jets and require about 270 gal/min of grout at 6,000 lb/in^2. Grouting operations were estimated to use 8 tool strings (or spokes) simultaneously for a total flow rate of 2,000 gal/min, which would require approximately 7,200 hp of pumping capacity. Each tool set would be operated for approximately 1 minute introducing approximately 2,000 gallons of grout into the tank. Based on this pumping rate and the assumptions made for the amount of grout needed to encapsulate the tank waste (approximately 3.5 times the original waste volume), the grouting operation would be completed in a single 10- to 12-hour shift.

Application of the MPI system to the Hanford Site closure demonstration tanks would be similar in configuration to the system envisioned for the SRS tank. The number of jets required would be less because of the difference in tank diameters and the volume of grout required to microencapsulate the waste heel could be less than the 105,000 gallons of grout assumed for the SRS deployment. Adding approximately 10 inches of grout to tank 241-C-106 would result in an approximately 10% waste loading by volume. Note that at the operating parameters identified for large-diameter tanks, this volume of grout would be injected into the tank in approximately 14 minutes of actual injection time.

Implementation of the MPI system would require a batch mixing plant that would have the capacity to supply the MPI system with material. Because the MPI system is only operated for short bursts of time, the grout mixing and delivery system would need to supply batches on the order of 2,000 gallons. In addition to the grout delivery and mixing systems the MPI system would require multiple high-pressure pumps to meet the flow/pressure requirements. The concept identified for the SRS called for 2,000 gal/min of grout at 6,000 lb/in^2 which required four 1,800-hp pumps or six 1,200-hp pumps. The configuration and layout of the in-tank portion of the MPI system comprised of the high-pressure grout lines and the injection tools would have to be defined and installed in the tank. In-tank obstructions could interfere with the placement of the injection tools in the desired locations across the floor of the tank.

Deployment of the MPI system in a large-diameter tank would require further development and cold testing of the system configuration for a large-diameter tank.

Safety: Based on the nature of the system with high-pressure (approximately 6,000 lb/in^2) grout and large volumes it is believed that there would be a number of safety issues and corresponding engineering controls that would need to be worked before deployment in an SST.

Compliance with Technical Requirements: The MPI system would exceed the technical requirements identified in the Level 2 Specification (RPP-11094) for contact of the grout with the residual waste.

Operability: The MPI system would be difficult to operate in relation to the other systems. There would be significant effort to install, configure, and verify the MPI system within the tank. Additionally, there would be a number of operational steps involved in making connections, injecting grout for short durations in a portion of the system, and moving connections to connect to remaining portions of the system.

Technical Risk: Since the Level 2 Specification (RPP-11094) requirement is for contact of the grout with the residual waste and there is not a requirement for microencapsulating the waste

there is little technical risk that the MPI system at a minimum would serve as a vehicle for placement of grout into the tank.

Programmatic Risk: This technology represents the most aggressive efforts to mix the residual waste with the grout material. There would be little programmatic risk to apply a more aggressive technology for creating a waste form for tank closure.

Deployment Schedule Risk: There is significant schedule risk with this technology for the deployment schedule identified. This is a proprietary technology that would require further testing and system design for application to a large-diameter tank.

Cost: This grout placement system is significantly more complex than the gravity fill system and involves the use of proprietary technology. Cost considerations include additional costs to design, procure, and install the MPI system; additional costs for the grout pumping system; and additional costs associated with operating the MPI system.

E4.2.3.7 In-Tank Mechanical Mixing using Robotic Mixers

Mechanical mixing using robotic mixers is a concept that could be used to physically mix portions of the residual waste heel with the stabilizing grout. Long reach arms or vehicle-based systems could be utilized to mix localized waste piles into the grout matrix. Vehicle-based pumps could also be used to move material around and incidentally mix the residual waste with the grout material. These systems would be used to incorporate residual waste into the grout material and would then be abandoned in the tank.

These technologies would likely not be effective at mobilizing and mixing thin layers of waste distributed over large areas of the tank liner. Additionally, mechanical mixing systems may encounter interference with in-tank equipment.

Any robotic system would have to be designed to provide the necessary mixing action across the entire area of interest (base area of the tank) before the grout set time.

No existing concepts for mechanical mixing of residual waste with stabilizing grout have been found to date.

Safety: There would be safety considerations necessary for the installation and deployment of robotic mixers in the tanks. These considerations, along with the appropriate engineering controls, would be evaluated during the design phase.

Compliance with Technical Requirements: Since the Level 2 Specification (RPP-11094) only requires contact of the grout with the residual waste, deployment of a mechanical mixer would meet or exceed the technical requirements.

Operability: A number of operational issues are potential problems. Following grout placement, a work stoppage in the tank farm could result in the grout setting up before the in-tank mixers could be deployed.

Technical Risk: Since there is no requirement for microencapsulation of the residual waste, the technical risk is limited. Substantial development would be required to create in-tank robotic

mixers. The dished bottom of tank 241-C-106, coupled with the in-tank hardware, would interfere with effective mixing of low volumes of residual waste remaining in the tank.

Programmatic Risk: The development and deployment of this type of technology represents a proactive effort to encapsulate the waste and create a waste form that reduces the potential release and migration of contaminants to the environment.

Deployment Schedule Risk: There would be substantial schedule risk associated with deployment of in-tank mechanical mixing with robotic mixers. Robotic mixers, along with all the associated support equipment (i.e., controls, instrumentation, procedures, safety documentation), would require development, testing, and procurement in FY 2003 to support a deployment in early FY 2004.

Cost: Cost considerations associated with the in-tank mechanical mixers include the additional design, development, testing, and procurement of the mixers. This system would be more complex than the gravity fill system.

E4.2.3.8 In-Tank Mixer Pump

An in-tank mixer pump could be utilized to recirculate the grout and mobilize/mix residual waste before the grout set time. The general concept would be similar to the mixer pumps that have been installed in the double-shell tanks and the mixing action would be the same as that described for the single-point injection with low-pressure grout. The difference between the in-tank mixer pump and the single-point injection system is that the mixer pump could be operated for a longer period of time to provide for increased mixing. A mixer pump could be operated for several hours but would need to be shut off before the set time of the grout mix. The single-point injection system would only allow for mixing action while introducing grout into the tank.

The in-tank mixing concept would provide for greater flexibility in the grout delivery and placement system in that the mixing system would not drive batch plant production and grout delivery flow rates.

Given the technical issues and development time that was required to develop and deploy mixer pumps in the double-shell tanks it is likely that comparable development time would be required for in-tank mixer pumps for grout mixing.

Safety: Operation of this system would involve injecting grout into the tank at relatively high rates and low pressures. Worker safety issues would be a concern and would require evaluation during design with potential controls to reduce the potential for accidents. Safety issues with the tank structure should be minor at the grout injection pressure.

Compliance with Technical Requirements: Since the Level 2 Specification (RPP-11094) only requires that the grout make contact with the residual waste, the deployment of a mixer pump would exceed the technical requirements for grout placement in the tank.

Operability: A number of operational issues are potential problems. Following grout placement, a work stoppage in the tank farm could result in the grout setting up before the mixer pump could be deployed.

Technical Risk: Since there is no requirement to microencapsulation of the residual waste, the technical risk is limited. Substantial development would be required to create an in-tank mixer pump. Technical problems during pump startup or operation once the grout had been placed in the tank would be a problem.

Programmatic Risk: The development and deployment of this type of technology represents a proactive effort to encapsulate the waste and create a waste form that reduces the potential release and migration of contaminants to the environment.

Deployment Schedule Risk: There would be substantial schedule risk associated with deployment of in-tank mixer pumps. In-tank mixer pumps along with all the associated support equipment (i.e., controls, instrumentation, procedures, safety documentation), would require development, testing, and procurement in FY 2003 to support a deployment in early FY 2004.

Cost: Cost considerations associated with the in-tank mixer pumps includes the incremental cost for additional design, development, testing, and procurement of the mixer pumps. The capital cost associated with these pumps would be substantial.

E4.3 BALANCE OF TANK FILL

Following stabilization of the residual waste in the bottom of the tank, it is assumed that the remaining void space in the tank and the at-tank pits and risers would be filled using a self-leveling flowable fill. Under this assumption, gravity filling the tank with a tremie from a single location is the only option that warrants further consideration.

Safety: There are no safety implications identified for this option.

Compliance with Technical Requirements: Gravity fill of the tank following stabilization of the waste residuals would meet all of the technical requirements defined in the Level 2 Specification (RPP-11094).

Operability: There would be limited operability issues associated with this technology.

Technical Risk: Technical risk associated with this method of tank filling would be minor.

Programmatic Risk: Following stabilization of the waste residual there would be little need for the follow-on fill material to do any more than provide for structural stabilization of the tank dome.

Deployment Schedule Risk: Little or no deployment schedule risk would be associated with this technology.

Cost: Cost considerations associated with this option are limited to the operations cost associated with mixing and pumping the grout to the tank.

E5.0 EVALUATION

The evaluation results are presented in Table E.3 for grout delivery to the site, Table E.4 for grout delivery to the tank, and Table E.5 for grout placement in the tank.

Table E.3. Grout Delivery to the Site

Options	Safety	Compiance with Technical Requirements	Operability	Technical Risk	Programmatic Risk	Deployment Schedule	Cost	Total
Raw Scores (1 to 5) with a higher score being more favorable to the criteria								
Premix Trucks	1	5	1	5	5	5	5	27
Batch Plant on Site (central)	3	5	2	5	5	3	2	25
Batch Plant at Tank Farm	4	5	4	5	5	5	3	31
Continuous Batching/Mixing Plant	5	5	5	5	5	5	3	33
Weighted Scores (factor 1 to 5 -based on relative importance to decision)								
Weighting Factor	5	4	2	1	3	3	3	
Premix Trucks	5	20	2	5	15	15	15	77
Batch Plan on Site (central)	15	20	4	5	15	9	6	74
Batch Plant at Tank Farm	20	20	8	5	15	15	9	92
Continuous Batching/Mixing Plant	25	20	10	5	15	15	9	99

Table E.4. Grout Delivery to the Tank

Options	Safety	Compiance with Technical Requirements	Operability	Technical Risk	Programmatic Risk	Deployment Schedule	Cost	Total
Raw Scores (1 to 5) with a higher score being more favorable to the criteria								
Truck Delivery to Tank Riser	1	5	1	3	5	5	2	22
Pump Grout from Outside Tank Farm	5	5	5	5	5	5	5	35
Boom Truck	4	5	4	5	5	5	4	32
Weighted Scores (factor 1 to 5 -based on relative importance to decision)								
Weighting Factor	5	4	2	1	3	3	3	
Truck Delivery to Tank Riser	5	20	2	3	15	15	6	66
Pump Grout from Outside Tank Farm	25	20	10	5	15	15	15	105
Boom Truck	20	20	8	5	15	15	12	95

Table E.5. Grout Placement Evaluation

Options	Safety	Compiance with Technical Requirements	Operability	Technical Risk	Programmatic Risk	Deployment Schedule	Cost	Total
Raw Scores (1 to 5) with a higher score being more favorable to the criteria								
Gravity Fill - 1 location	5	1	5	3	1	5	5	25
Gravity Fill - 1 location, 2 lifts	5	2	5	3	1	5	5	26
Gravity Fill - 1 location, multiple lifts	5	3	4	4	3	5	4	28
Gravity Fill - multiple locations - 2 or more lifts	4	3	2	3	3	5	3	23
Single Point Injection - Low Pressure Grout	3	4	3	4	5	3	2	24
Mulit Point Injection - High Pressure Grout	1	5	1	3	5	1	1	17
In Tank Mechanical Mixing	2	3	2	1	3	1	1	13
In Tank Mixer Pump	2	4	2	2	4	1	1	16
Weighted Scores (factor 1 to 5 -based on relative importance to decision)								
Weighting Factor	5	4	2	1	3	3	3	21
Gravity Fill - 1 location	25	4	10	3	3	15	15	75
Gravity Fill - 1 location, 2 lifts	25	8	10	3	3	15	15	79
Gravity Fill - 1 location, multiple lifts	25	12	8	4	9	15	12	85
Gravity Fill - multiple locations - 2 or more lifts	20	12	4	3	9	15	9	72
Single Point Injection - Low Pressure Grout	15	16	6	4	15	9	6	71
Mulit Point Injection - High Pressure Grout	5	20	2	3	15	3	3	51
In Tank Mechanical Mixing	10	12	4	1	9	3	3	42
In Tank Mixer Pump	10	16	4	2	12	3	3	50

E6.0 ALTERNATIVE SELECTION

Based on the scoring completed in Tables E.3, E.4, and E.5, the recommended grout delivery and placement system for further definition in the preliminary engineering and Basis of Design report comprises the following:

1. A continuous batching/mixing plant located just outside the tank farm.
2. Delivery of the grout to the tanks by pumping the grout through a slickline to the tank.
3. Gravity filling the tanks from a single location using multiple lifts.

E7.0 REFERENCES

Ecology, EPA, and DOE, 1989, *Hanford Federal Facility Agreement and Consent Order*, as amended, Washington State Department of Ecology, U.S. Environmental Protection Agency, and U.S. Department of Energy, Olympia, Washington.

ORNL-TM-2000/8, 2000, *Utilization of the MPI™ Process for In-Tank Solidification of Heel Material in Large-Diameter Cylindrical Tanks*, Oak Ridge National Laboratory, Oak Ridge, Tennessee.

RPP-11094, 2002, *Tank Closure Fill System for the Accelerated Tank Closure Demonstration Level 2 Specification*, Rev. 0, CH2M HILL Hanford Group, Inc., Richland, Washington.

This page intentionally left blank.

ATTACHMENT E1

MEETING MINUTES FROM REVIEW MEETING HELD 8/6/02

This page intentionally left blank.

ATCD PRELIMINARY ENGINEERING MEETING MINUTES

Meeting Date – 8/6/02
Time – 4:00 – 6:00 pm
Location – Sigma 1, Room 89
Subject – ATCD Grout Delivery/Placement Evaluation

Attendees:

John Winters, CH2M HILL
Stacey Callison, CHI
Dave Strasser, CHG
Gary Kelmel, CHG
Craig Sump, CHI
Bill Grams, CHG
Jerry Cammann, CHG
Ed Fredenburg, CHG
Larry Ulbricht, Columbia Energy
Colin Henderson, Columbia Energy

The purpose of this meeting was to review work completed to date to identify and select a single concept for delivering and placing grout in the 5 demonstration tanks. The material in the attached presentation was presented and discussed with the understanding that the purpose of the meeting was to select a single concept for further development in the Basis of Design report and that issues, concerns, and uncertainties would be worked through in the preliminary engineering process. All changes made to the presentation material during the meeting are reflected in redline/strikeout. It was acknowledged that the decision from this meeting was not the final decision for a grout delivery and placement system but an interim decision to allow the preliminary engineering to move forward.

Concerns were raised in the requirements discussion (Slide 3) regarding thermal loading in the tank in terms of maximum allowable temperature as well as a temperature rate of change. This will be evaluated in follow on engineering activities but it was agreed that this requirement would not affect current concept evaluation. Ed Fredenburg commented that the grout formulation effort will consider grout formulations for completely filling tank 241-C-106 in a 30-day period (including waste heel stabilization).

An additional decision criteria to minimize land use/environmental impacts was discussed as a possible addition to the decision criteria on Slide 4. However, it was agreed that this criterion would not likely be a differentiator among the options.

In discussing and reviewing the evaluation of options the scope of the closure demonstration was discussed. If the demonstration was limited to stabilization of the waste heel the volume of grout needed would be significantly smaller than if completely filling the tank was the objective of the demonstration. This would change the scoring for some of the options evaluated. It was determined that filling the tanks was the proper context to evaluate the options. It was further

discussed that applicability of a given option to future closures should be considered in the evaluation.

In discussing the evaluation of options for delivery of grout to the site it was clarified that the intent of the two options (Batch Plant at Tank Farm and Continuous Batching/Mixing Plant) would be portable units that would be brought onsite and operated by a private contractor. The raw safety scores for the options were discussed and concerns with the safety score for the premix truck option were raised. It was agreed that the safety score for the premix truck delivery should be raised from 1 to 3.

An action was taken to contact Rick Tedeschi regarding the existing grout plant built for the grout vault program to determine if it had any potential for use in mixing grout for the closure demonstration. If readily available it would score higher than a 3 in the evaluation for deployment schedule. Per Rick the grout facilities were shut down in 1994 and have not been maintained. A grout plant restart evaluation is currently underway and based on the current draft the time frame required for restarting is 2 ½ to 3 ½ years, mainly driven by environmental and permitting requirements. Based on this information, no change to the scoring for deployment schedule is warranted.

In discussing the evaluation of options for delivering grout to the tanks the raw safety score for truck delivery to the tank was raised from a 1 to a 3 recognizing that trucks have been and can be safely brought into the farms. The scores for cost were revised for pumping grout from outside the tank farm from a 5 to a 4 because of the cost/effort associated with placing/handling the lines in the farm. The cost score for the boom truck option was revised from a 4 to a 5.

No changes were made to the scoring/ranking of the options for placing grout in the tanks.

Following the discussion it was concurred by the group that the recommended concept for development in the Basis of Design report would include:

1. Portable continuous batching/mixing plant located near the tank farm.

2. Delivery of the grout to the tank by pumping from outside the tank farm through a slickline.

3. Stabilization of the heel by gravity filling from one location using multiple lifts.

4. Filling the balance of the tank from one location by gravity filling with flowable fill material.

Questions concerning the use of sequestering agents (getters) in the grout formulation and the amount of liquid in the waste heel were deferred to the formulation of the grout.

APPENDIX F
SKETCHES

This page intentionally left blank.

SKETCHES

CE-SK-02-101	ATCD PRELIMINARY ENGINEERING 241-C SITE PLAN
CE-SK-02-102	ATCD PRELIMINARY ENGINEERING 241-C-106 HVAC PLAN
CE-SK-02-103	ATCD PRELIMINARY ENGINEERING 241-C-106 PLAN VIEW
CE-SK-02-104	ATCD PRELIMINARY ENGINEERING 241-C-106 SLUICE PIT
CE-SK-02-105	ATCD PRELIMINARY ENGINEERING 241-C-106 PUMP PIT
CE-SK-02-106	ATCD PRELIMINARY ENGINEERING 241-C-106 HEEL PIT CONFIGURATION
CE-SK-02-107	ATCD PRELIMINARY ENGINEERING 241-C-106 CASCADE LINE ISOLATION
CE-SK-02-108	ATCD PRELIMINARY ENGINEERING 241-C-106 STABILIZATION
CE-SK-02-109	ATCD PRELIMINARY ENGINEERING 241-C-106 STABILIZED SLUICE PIT
CE-SK-02-110	ATCD PRELIMINARY ENGINEERING 241-C-106 STABILIZED PUMP PIT
CE-SK-02-111	ATCD PRELIMINARY ENGINEERING 241-C-106 STABILIZED HEEL PIT
CE-SK-02-120	ATCD PRELIMINARY ENGINEERING 241-C-200 SERIES HVAC
CE-SK-02-121	ATCD PRELIMINARY ENGINEERING 241-C-200 SERIES CONFIGURATION
CE-SK-02-122	ATCD PRELIMINARY ENGINEERING 241-C-200 SERIES STABILIZED
CE-SK-02-123	ATCD PRELIMINARY ENGINEERING 241-C-200 SERIES STABILIZED PITS

REFERENCES

H-2-818470 REV 3	HVAC C-106 VENTILATION PLAN
H-2-93797 REV 2	DRAWING LIST/HVAC EQUIPMENT PLAN & SECTIONS
H-2-818469 REV 1	HVAC OVERALL C-FARM SITE PLAN TANK C-106
H-2-820757	PUMP PIT 241-CR-06A REPLACEMENT DECK INSTALATION
H-2-72352	4" RISERS FOR TEMPERATURE PROBES TANKS 105-C & 106-C
H-2-73346	PIPING WASTE TANK ISOLATION TANK 241-C-106
H-2-41812 REV 3	MECH. EQUIP.- ASSY. SLUDGE JET
HW-72417	20' ø COMPOSITE STORAGE TANKS CONCRETE PLANS & DETAILS
H-2-41816 REV 1	MECH. EQUIP. DETAILS 12" RISERS SLUDGE JET & SLUICING NOZZLES
H-2-73352	PIPING WASTE TANK ISOLATION 241-C-201
H-2-41294	MECH. EQUIP. PLAN, SECTION & DETAILS HEEL JET
H-2-818524	PIPING JUMPER ARRANGEMENT PUMP PIT 241-C-06A
H-2-41318	MECH. EQUIP. ASSEMBLY DIPLEGS WASTE METAL REMOVAL
H-2-818549	PIPING SLUICER INSTALLATION
H-2-818494	PIPING PUMP & WINCH INSTALL - C-TANK & DRAWING LIST
H-2-41345 REV 2	STRUCTURAL CONCRETE PLAN & SECTIONS HEEL PIT
H-2-38600	SALT WELL PUMP, HEEL PIT, PIPING ARRANGEMENT
H-2-41190	PIPING CASCADE PUMP PIT PLAN & SECTIONS 104-CASCADE
H-2-818524 REV 2	PIPING JUMPER ARRRANGEMENT PUMP PIT 241-C-06A
H-2-818519 REV 1	PIPING SERVICE PIPING PLAN AND DETAIL
H-2-818431 REV 2	CIVIL 241-C TANK FARM SITE PLAN
H-2-818430 REV 2	CIVIL 241-C-106 RAW WATER SYSTEM PLAN & PROFILE
H-2-818526 REV 3	PIPING JUMPER ARRANGEMENT SLUICE PIT 241-C-06C
H-2-41194 REV 2	PIPING CASCADE

APPROVALS	SIGNATURE	DATE
DWN BY	R. REISS	9/19/02
CHK BY	L. Ulbricht	9/19/02
PROJ MGR	C.Henderson	9/19/02
OTHER		

NEXT USED ON END ITEM

COLUMBIA ENERGY AND ENVIRONMENTAL SERVICES, INC

ATCD PRELIMINARY ENGINEERING DRAWING INDEX

SIZE	BLDG NO	PROJECT:	DWG NO	REV
B		15733	CE-SK-02-100	0

SCALE NONE

SHEET 1 of 1

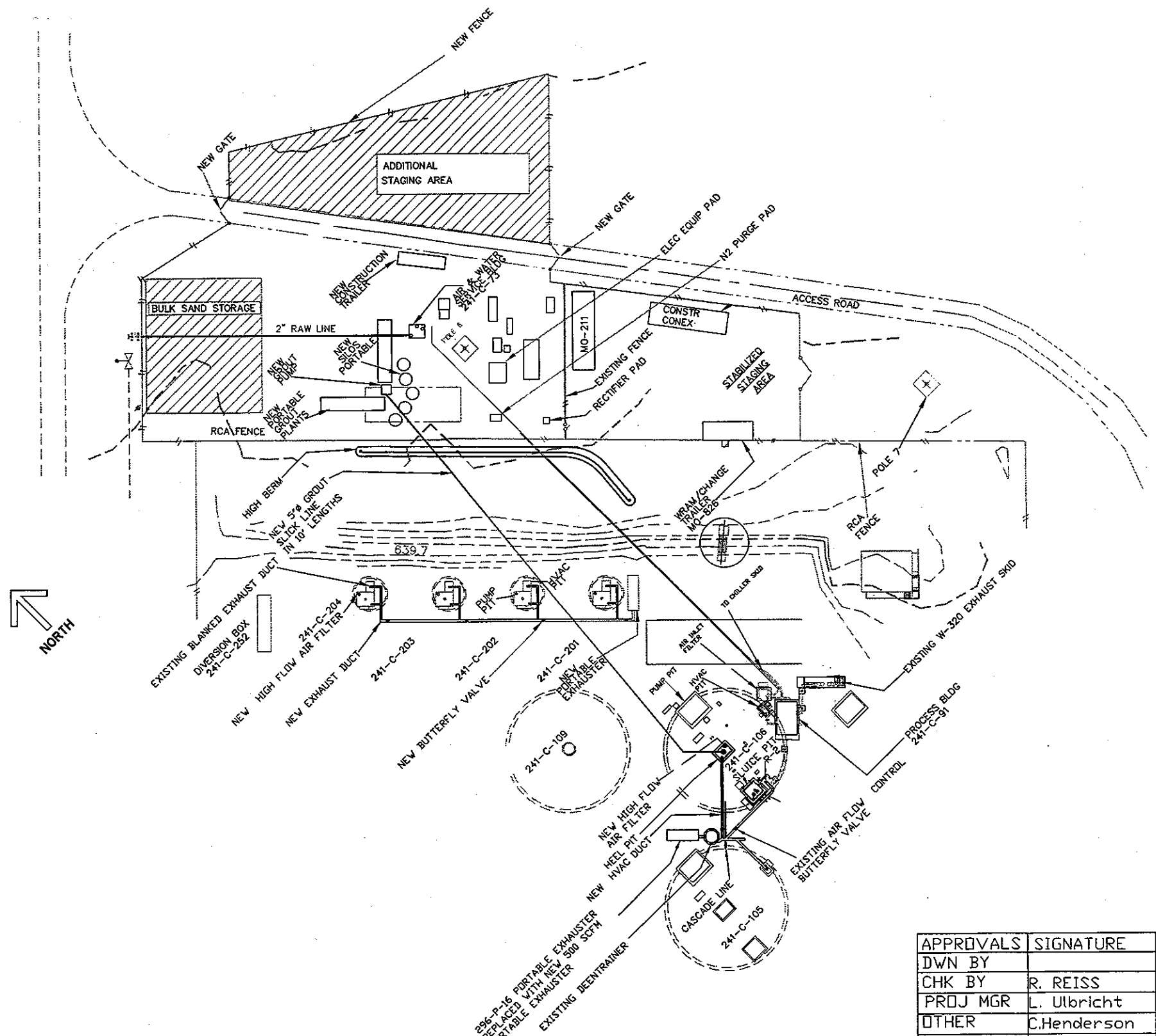

APPROVALS	SIGNATURE	DATE
DWN BY		
CHK BY	R. REISS	9/19/02
PROJ MGR	L. Ulbricht	9/19/02
OTHER	C.Henderson	9/19/02

COLUMBIA ENERGY AND ENVIRONMENTAL SERVICES, INC

ATCD PRELIMINARY ENGINEERING
241-C SITE PLAN

SIZE	BLDG NO	PROJECT:	DWG NO	REV
B		15733	CE-SK-02-101	0

NEXT USED ON CE-SK-02-100

SCALE NONE

SHEET 1 of 1

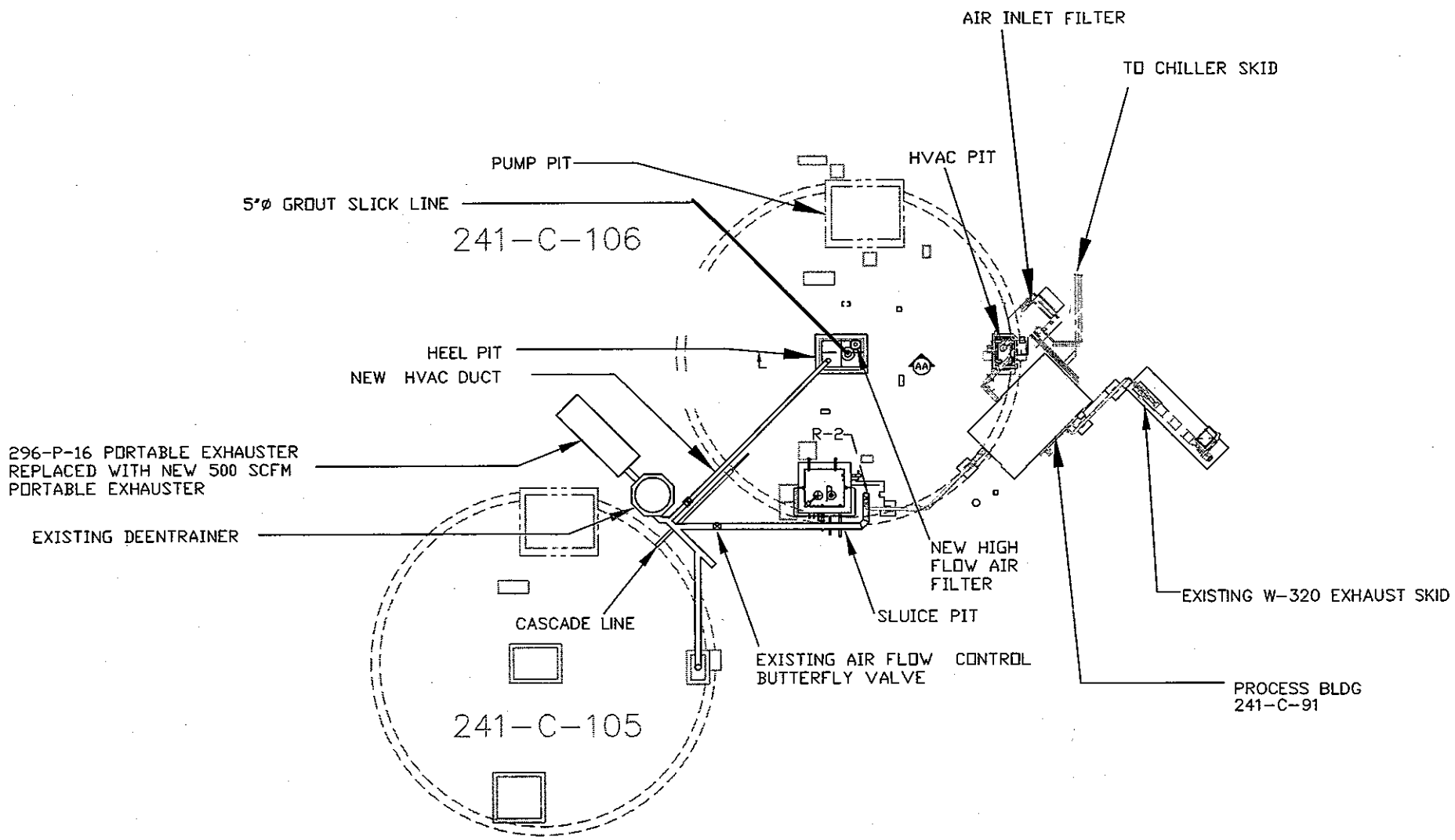

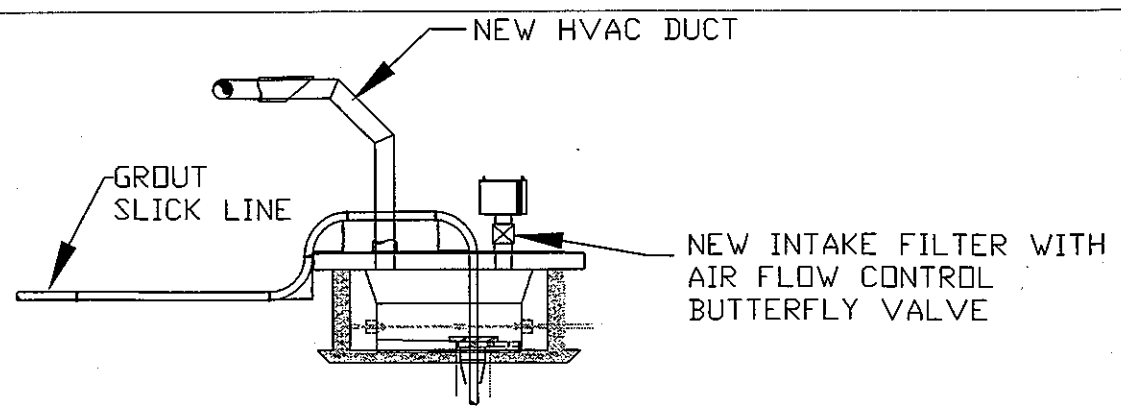

VEIW AA

HEEL PIT

APPROVALS	SIGNATURE	DATE
DWN BY	R. REISS	9/19/02
CHK BY	L. Ulbricht	9/19/02
PROJ MGR	C.Henderson	9/19/02
OTHER		

NEXT USED ON CE-SK-02-100

COLUMBIA ENERGY AND ENVIRONMENTAL SERVICES, INC

ATCD PRELIMINARY ENGINEERING
241-C-106 HVAC PLAN

SIZE	BLDG NO	PROJECT:	DWG NO	REV
B		15733	CE-SK-02-102	0

SCALE NONE

SHEET 1 of 1

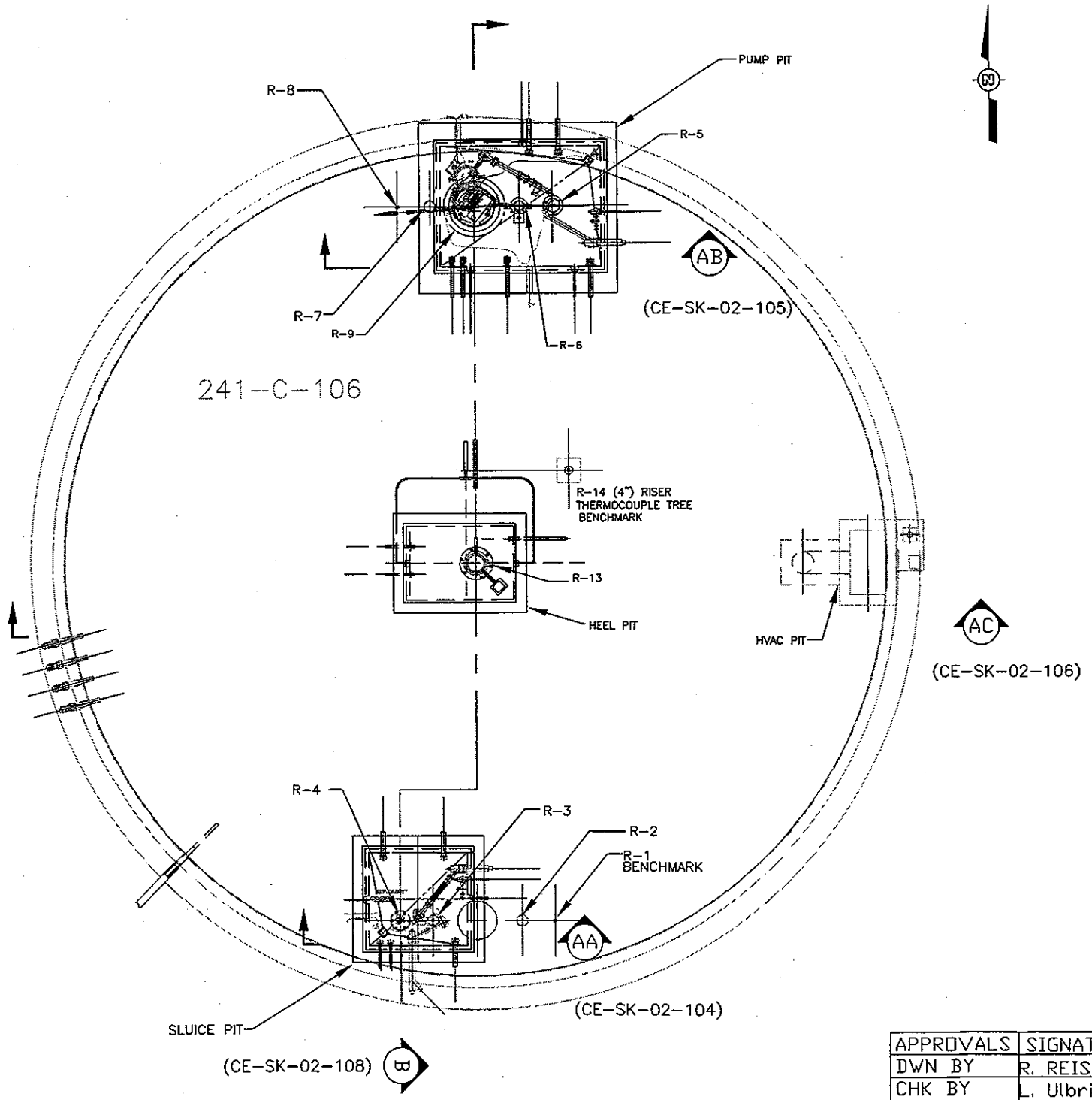

APPROVALS	SIGNATURE	DATE
DWN BY	R. REISS	9/19/02
CHK BY	L. Ulbricht	9/19/02
PROJ MGR	C.Henderson	9/19/02
OTHER		

COLUMBIA ENERGY AND ENVIRONMENTAL SERVICES, INC

ATCD PRELIMINARY ENGINEERING
241-C-106
PLAN VIEW

SIZE	BLDG NO	PROJECT:	DWG NO	REV
B		15733	CE-SK-02-103	0

NEXT USED ON CE-SK-02-100

SCALE NONE

SHEET 1 of 1

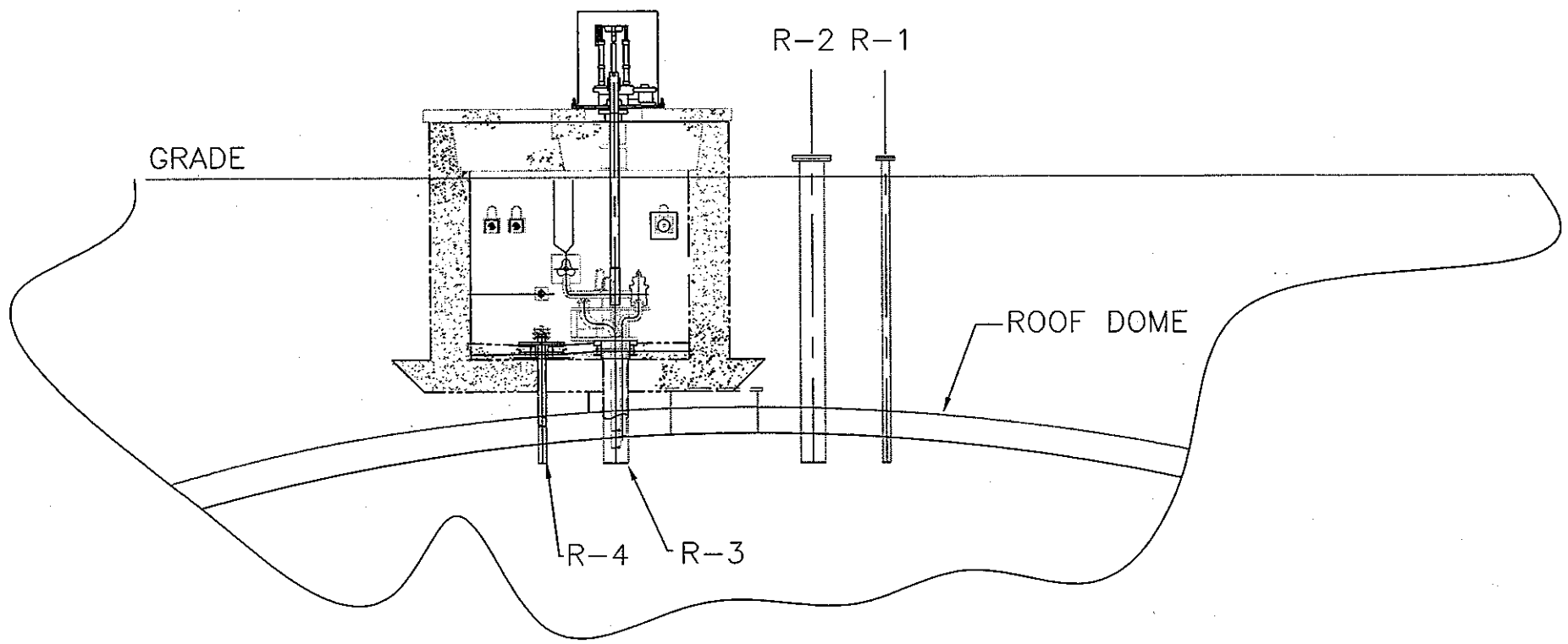

SECTION AA

SLUICE PIT CONFIGURATION CE-SK-02-103

APPROVALS	SIGNATURE	DATE
DWN BY	R. REISS	9/19/02
CHK BY	L. Ulbricht	9/19/02
PROJ MGR	C.Henderson	9/19/02
OTHER		

NEXT USED ON CE-SK-02-100

COLUMBIA ENERGY AND ENVIRONMENTAL SERVICES, INC

ATCD PRELIMINARY ENGINEERING
241-C-106 SLUICE PIT

SIZE	BLDG NO	PROJECT:	DWG NO	REV
B		15733	CE-SK-02-104	0

SCALE NONE

SHEET 1 of 1

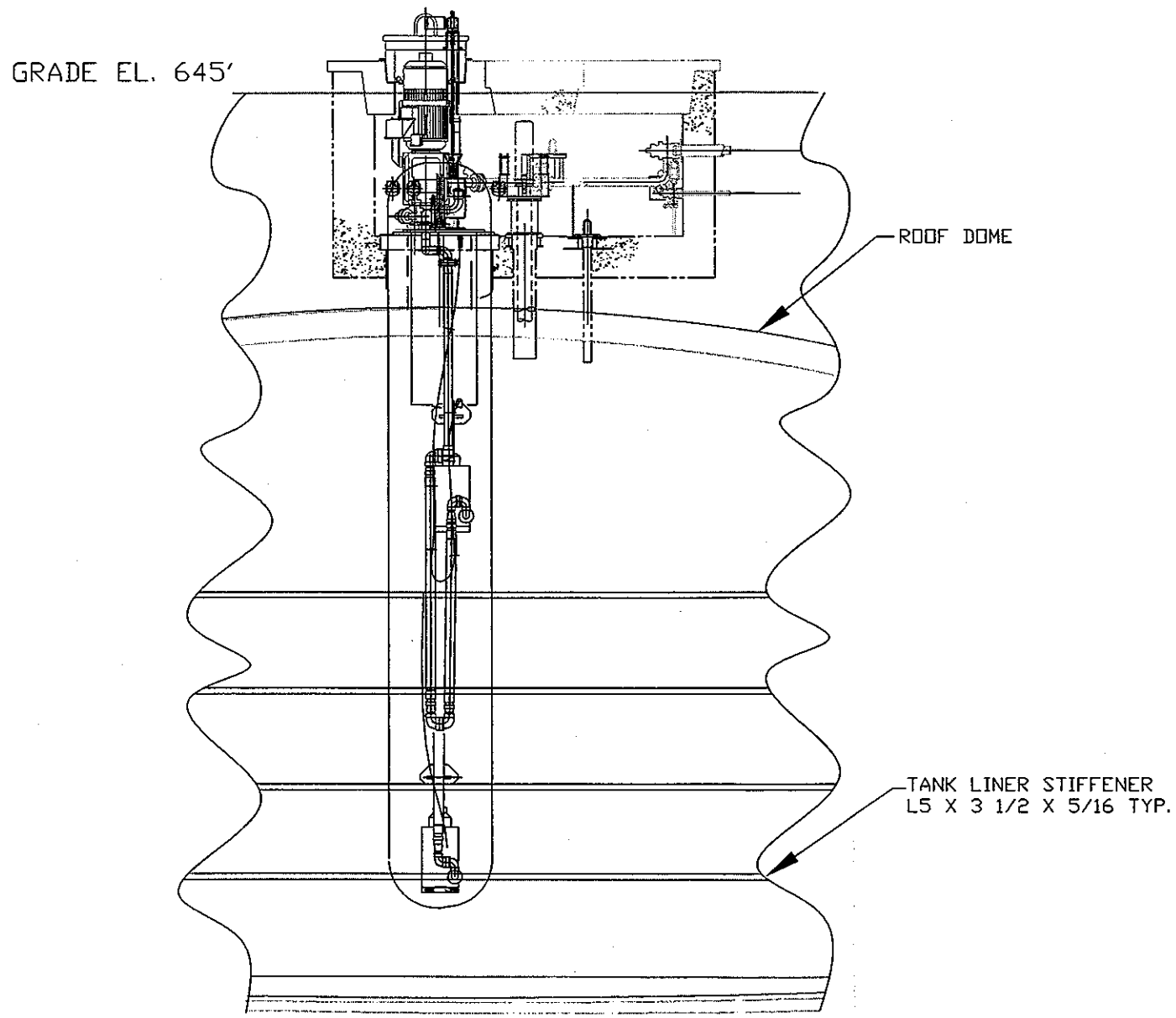

SECTION AB

PUMP PIT CONFIGURATION CE-SK-02-103

APPROVALS	SIGNATURE	DATE
DWN BY	R. REISS	9/19/02
CHK BY	L. Ulbricht	9/19/02
PROJ MGR	C.Henderson	9/19/02
OTHER		

NEXT USED ON CE-SK-02-100

COLUMBIA ENERGY AND ENVIRONMENTAL SERVICES, INC

ATCD PRELIMINARY ENGINEERING
241-C-106 PUMP PIT

SIZE	BLDG NO	PROJECT:	DWG NO	REV
B		15733	CE-SK-02-105	0

SCALE NONE

SHEET 1 of 1

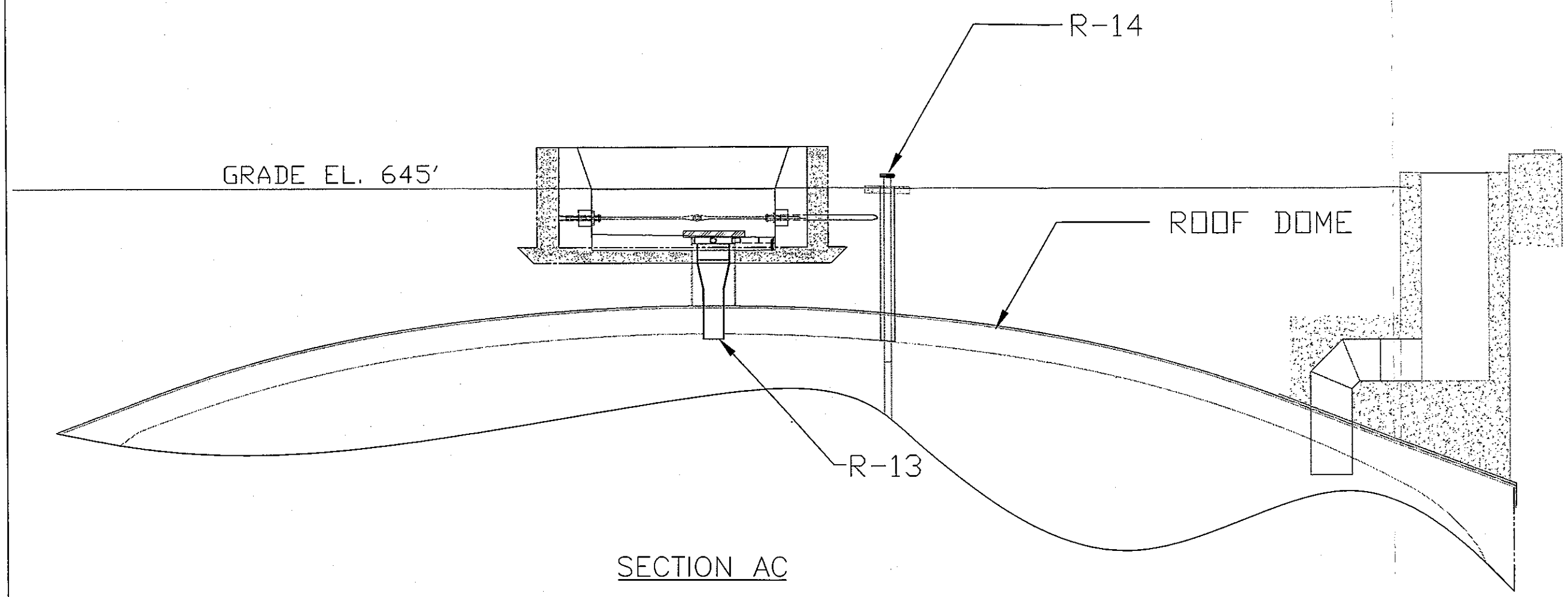

SECTION AC

HEEL PIT CONFIGURATION CE-SK-02-103

APPROVALS	SIGNATURE	DATE
DWN BY	R. REISS	9/19/02
CHK BY	L. Ulbricht	9/19/02
PROJ MGR	C.Henderson	9/19/02
OTHER		

NEXT USED ON CE-SK-02-100

COLUMBIA ENERGY AND ENVIRONMENTAL SERVICES, INC

ATCD PRELIMINARY ENGINEERING
241-C-106
HEEL PIT CONFIGURATION

SIZE	BLDG NO	PROJECT:	DWG NO	REV
B		15733	CE-SK-02-106	0

SCALE NONE

SHEET 1 of 1

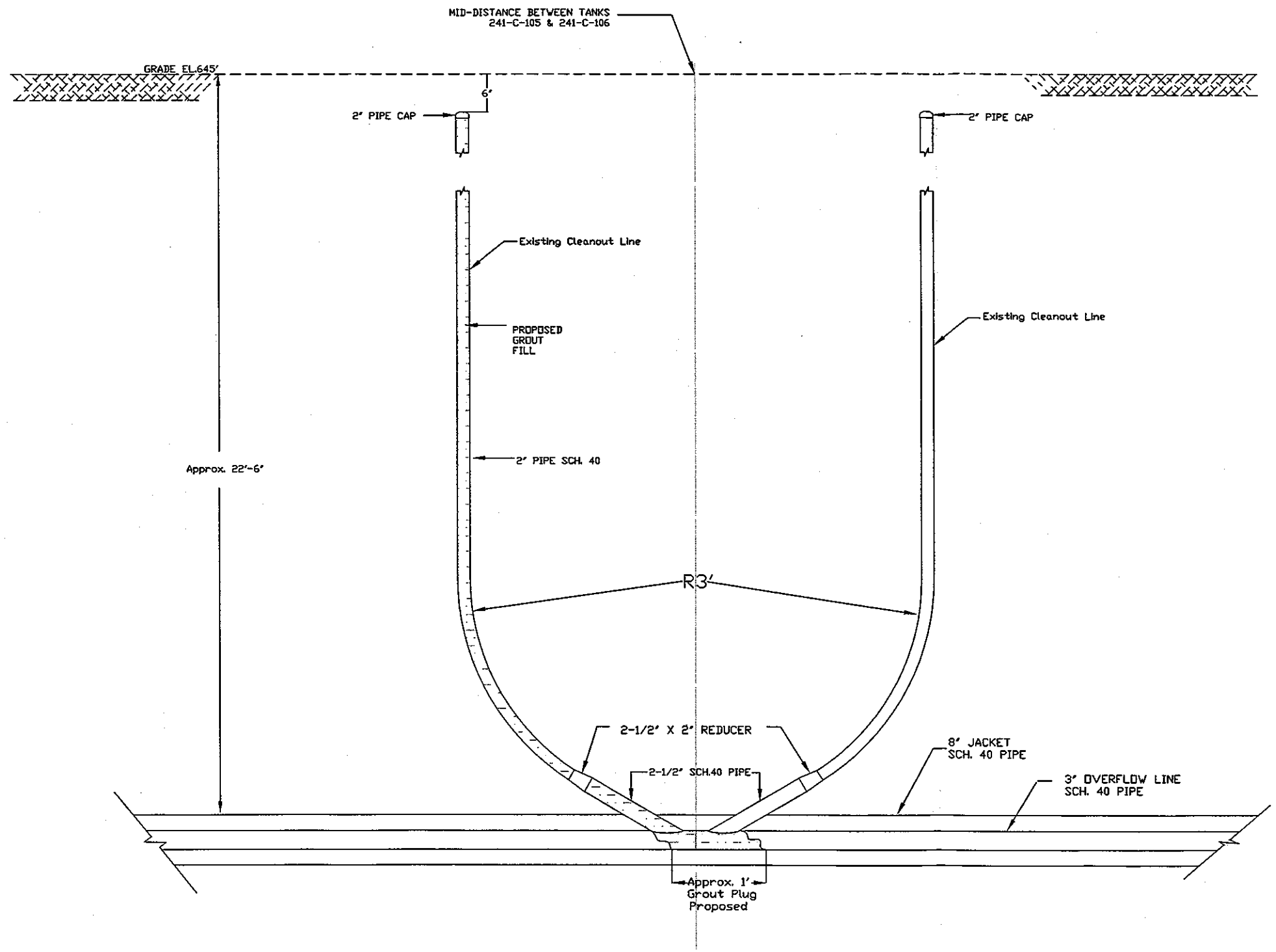

APPROVALS	SIGNATURE	DATE
DWN BY	R. REISS	9/19/02
CHK BY	L. Ulbricht	9/19/02
PROJ MGR	C.Henderson	9/19/02
OTHER		
NEXT USED ON	CE-SK-02-100	

COLUMBIA ENERGY AND ENVIRONMENTAL SERVICES, INC

ATCD PRELIMINARY ENGINEERING
241-C-106
CASCADE LINE ISOLATION

SIZE	BLDG NO	PROJECT:	DWG NO	REV
B		15733	CE-SK-02-107	0

SCALE	SHEET
NONE	1 of 1

Configuration Notes	
STEP 1	
1	TREMIE INSTALLED
2	VIDEO CAMERA INSTALLED IN R-7 (NOT SHOWN)
3	VENTILATION INTAKE AT HVAC PIT (NOT SHOWN)
4	VENTILATION EXHAUST AT RISER R-2 (NOT SHOWN)
STEP 2	
1	NO TREMIE
2	NO VIDEO CAMERA
3	VENTILATION INTAKE AT HVAC PIT (NOT SHOWN)
4	VENTILATION EXHAUST AT RISER R-2 (NOT SHOWN)
STEP 3	
1	NO TREMIE
2	NO VIDEO CAMERA
3	VENTILATION INTAKE AND EXHAUST AT HEEL PIT COVER PLATE

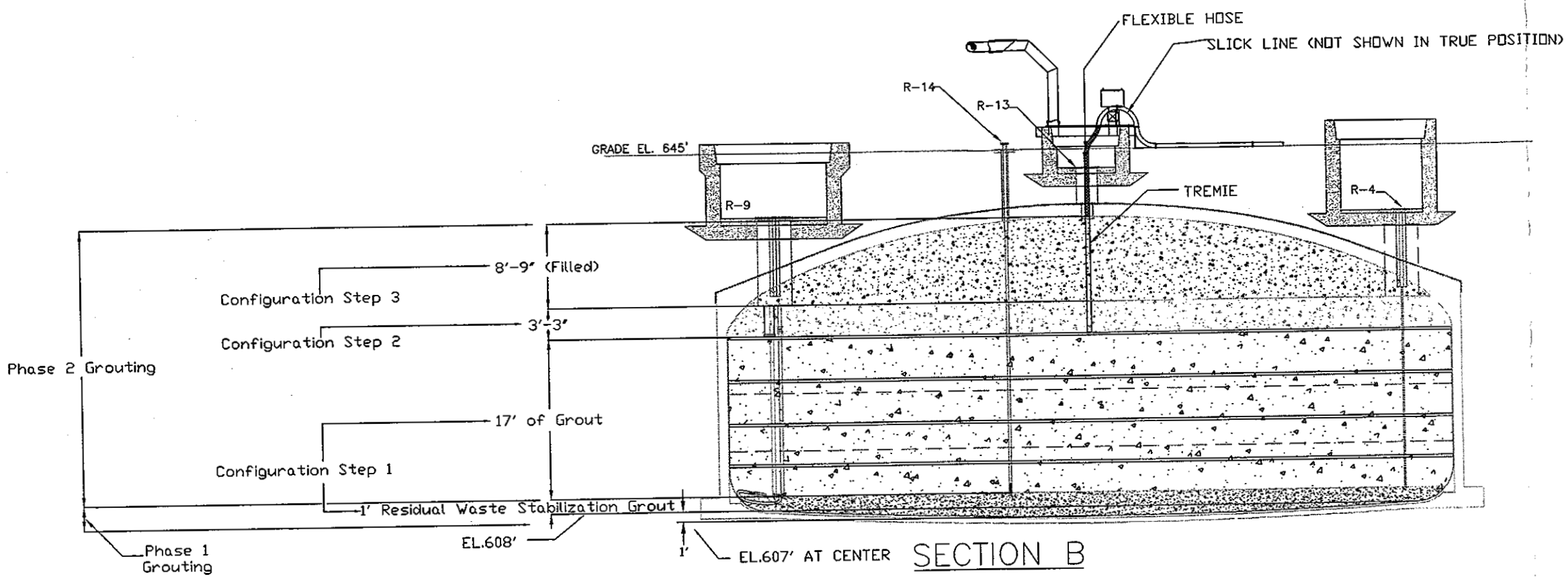

SECTION B

STABILIZATION CONFIGURATION CE-SK-02-103
HARDWARE AND EQUIPMENT REMOVED FOR CLARITY

APPROVALS	SIGNATURE	DATE
DWN BY	R. REISS	9/19/02
CHK BY	L. Ulbricht	9/19/02
PROJ MGR	C.Henderson	9/19/02
OTHER		

COLUMBIA ENERGY AND ENVIRONMENTAL SERVICES, INC

ATCD PRELIMINARY ENGINEERING
241-C-106 STABILIZATION

SIZE	BLDG NO	PROJECT:	DWG NO	REV
B		15733	CE-SK-02-108	0

NEXT USED ON CE-SK-02-100

SCALE NONE

SHEET 1 of 1

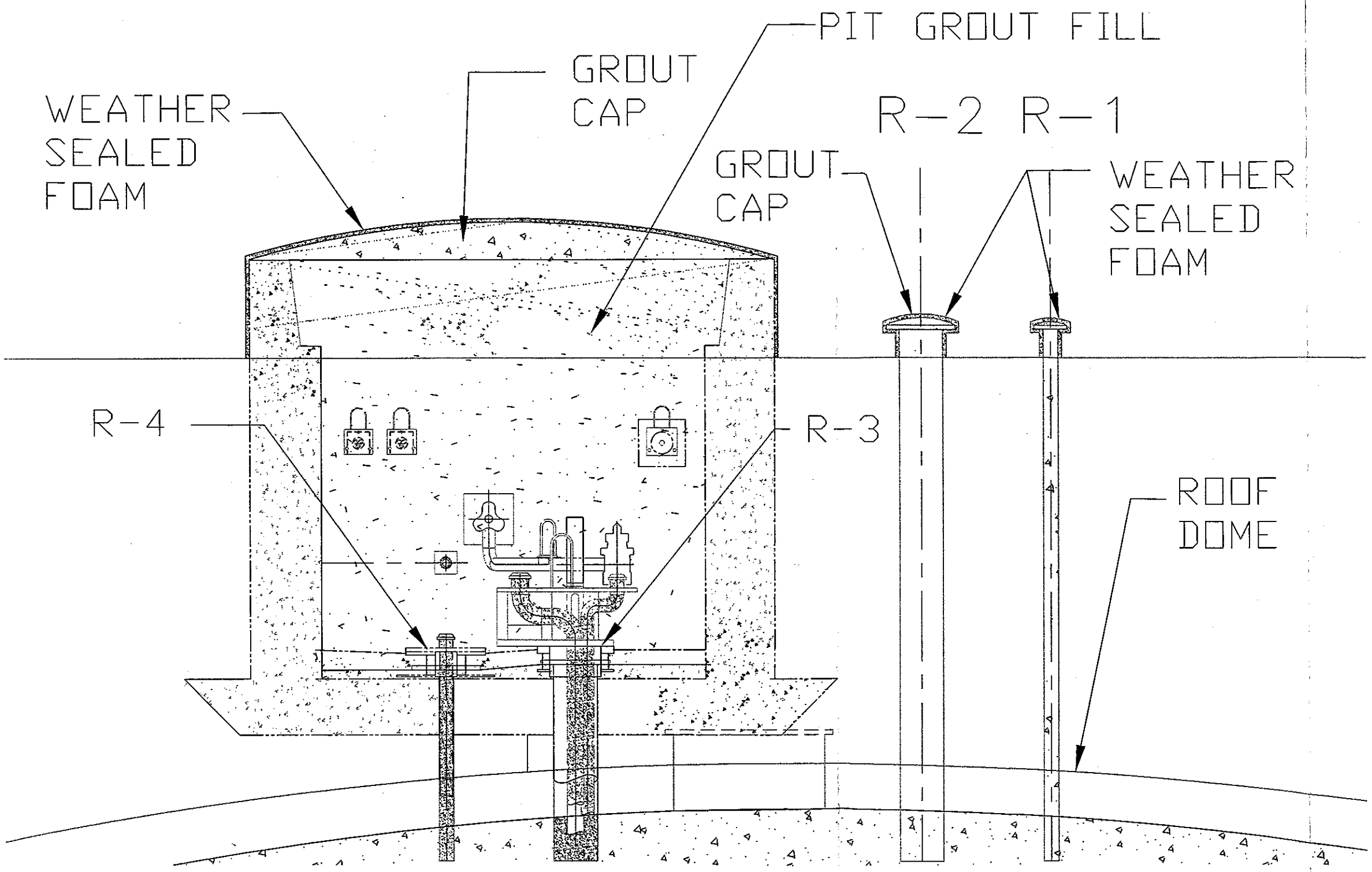

APPROVALS	SIGNATURE	DATE
DWN BY	R. REISS	9/19/02
CHK BY	L. Ulbricht	9/19/02
PROJ MGR	C.Henderson	9/19/02
OTHER		

COLUMBIA ENERGY AND ENVIRONMENTAL SERVICES, INC

ATCD PRELIMINARY ENGINEERING
241-C-106
STABILIZED SLUICE PIT

SIZE	BLDG NO	PROJECT:	DWG NO	REV
B		15733	CE-SK-02-109	0

NEXT USED ON CE-SK-02-100

SCALE NONE

SHEET 1 of 1

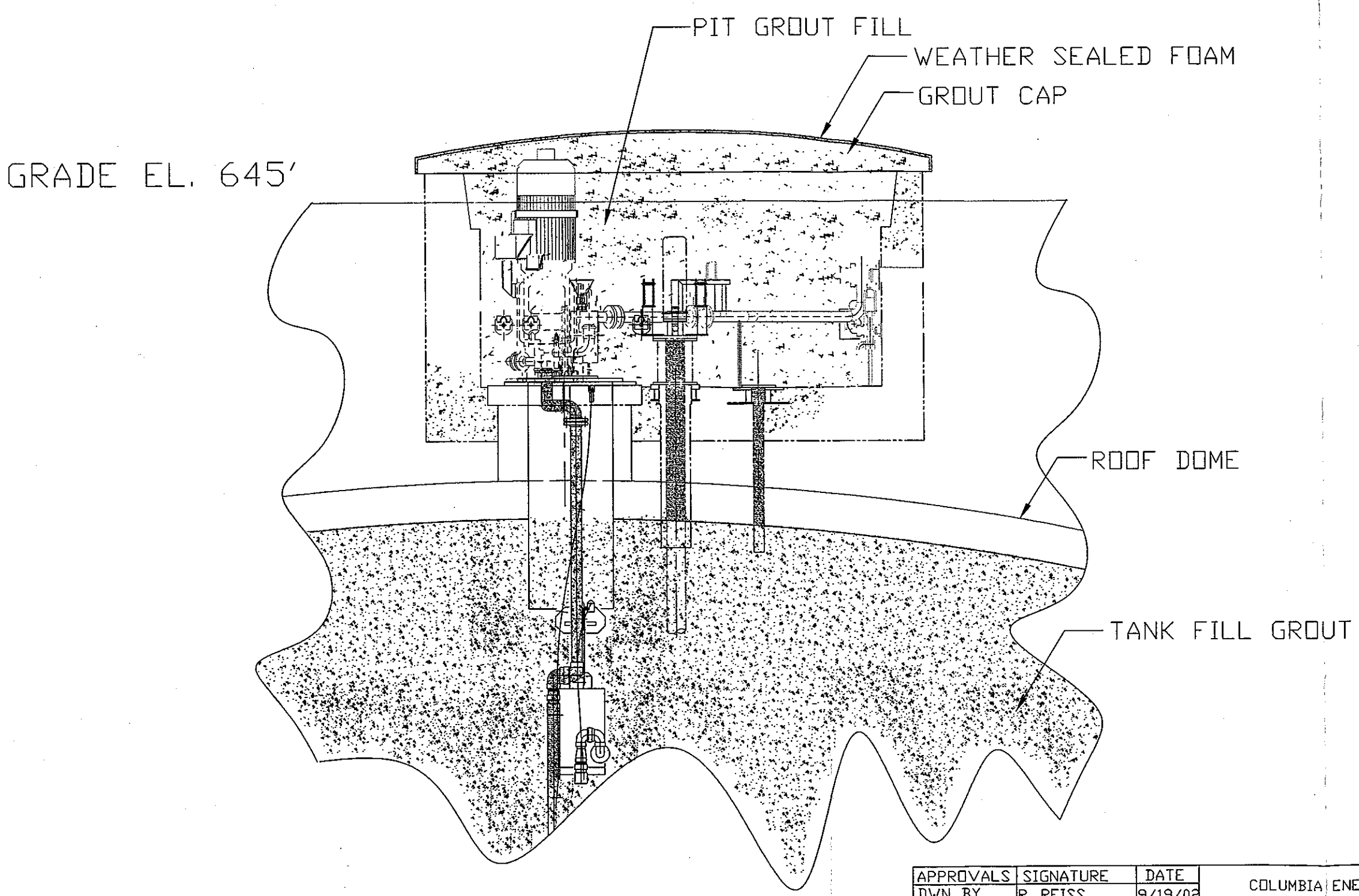

APPROVALS	SIGNATURE	DATE
DWN BY	R. REISS	9/19/02
CHK BY	L. Ulbricht	9/19/02
PROJ MGR	C.Henderson	9/19/02
OTHER		
NEXT USED ON	CE-SK-02-100	

COLUMBIA ENERGY AND ENVIRONMENTAL SERVICES, INC

ATCK PRELIMINARY ENGINEERING
241-C-106
STABILIZED PUMP PIT

SIZE	BLDG NO	PROJECT:	DWG NO	REV
B		15733	CE-SK-02-110	0

SCALE NONE

SHEET 1 of 1

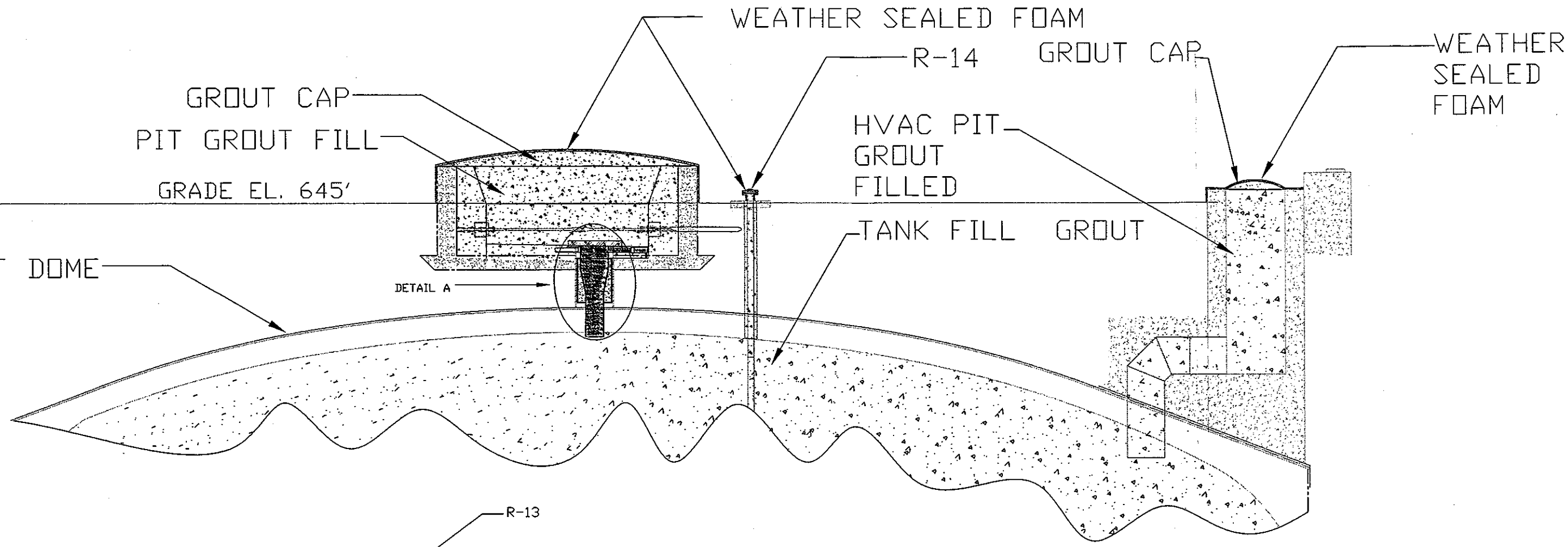

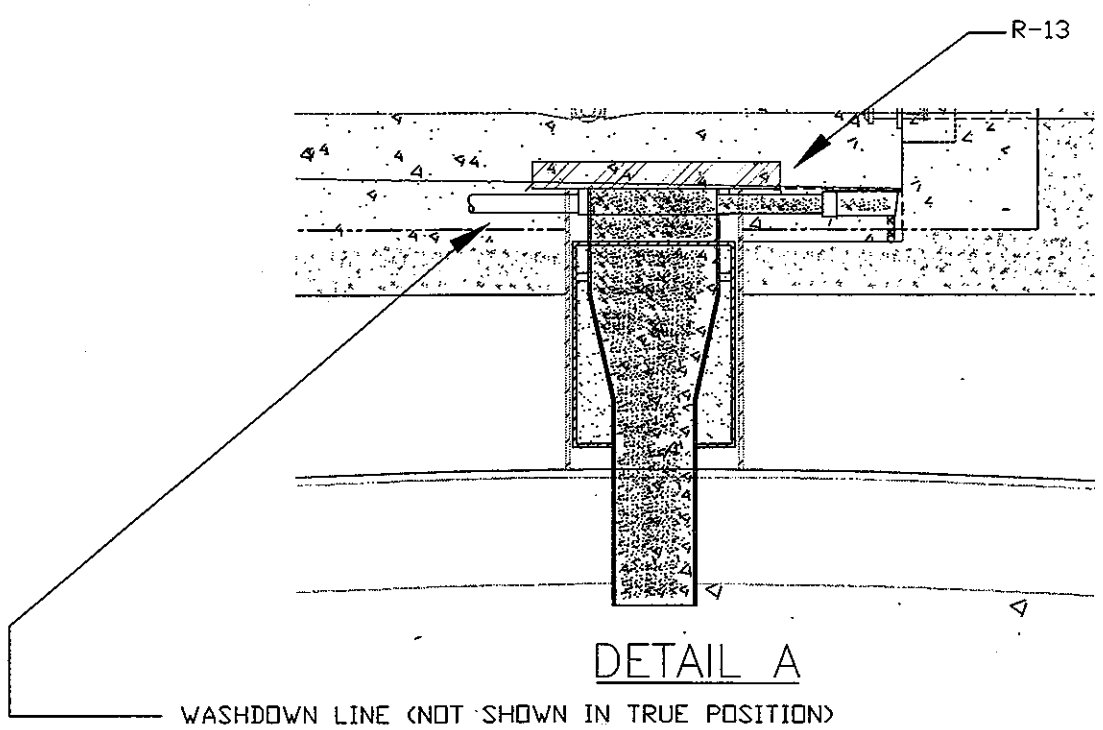

APPROVALS	SIGNATURE	DATE
DWN BY	R. REISS	9/19/02
CHK BY	L. Ulbricht	9/19/02
PROJ MGR	C.Henderson	9/19/02
OTHER		

COLUMBIA ENERGY AND ENVIRONMENTAL SERVICES, INC

ATCD PRELIMINARY ENGINEERING
241-C-106 STABILIZED HEEL PIT

SIZE	BLDG NO	PROJECT:	DWG NO	REV
B		15733	CE-SK-02-111	0

NEXT USED ON CE-SK-02-100

SCALE NONE

SHEET 1 of 1

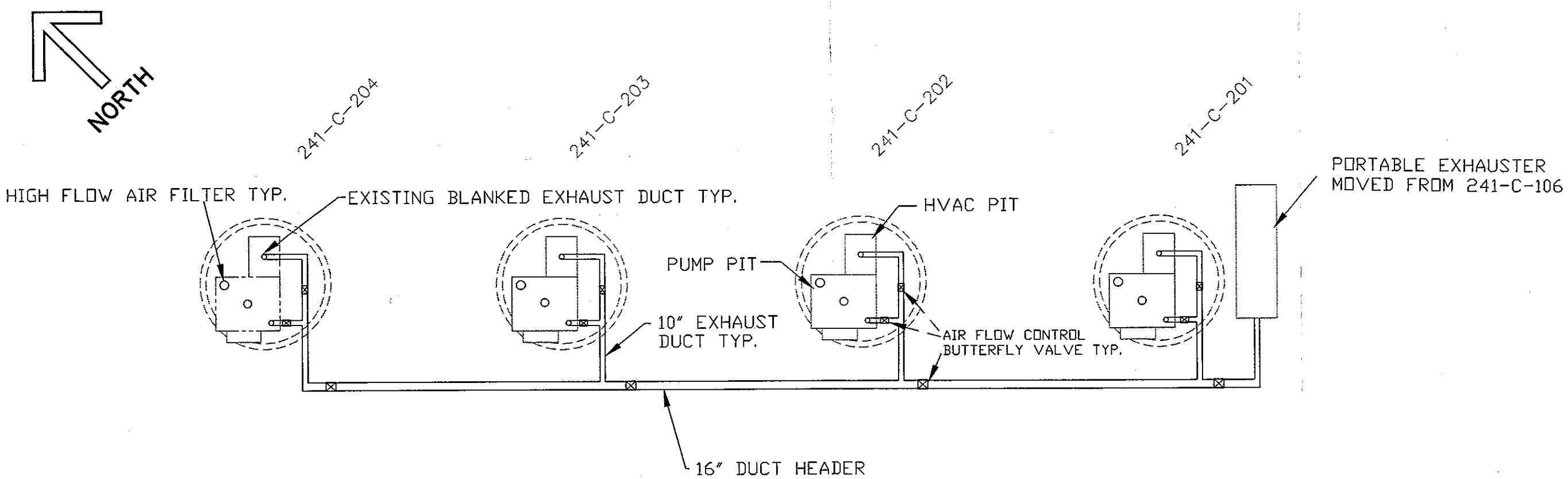

APPROVALS	SIGNATURE	DATE
DWN BY	R. REISS	9/19/02
CHK BY	L. Ulbricht	9/19/02
PROJ MGR	C.Henderson	9/19/02
OTHER		

NEXT USED ON CE-SK-02-100

COLUMBIA ENERGY AND ENVIRONMENTAL SERVICES, INC

ATCD PRELIMINARY ENGINEERING
241-C-200 SERIES HVAC

SIZE	BLDG NO	PROJECT:	DWG NO	REV
B		15733	CE-SK-02-120	0

SCALE NONE

SHEET 1 of 1

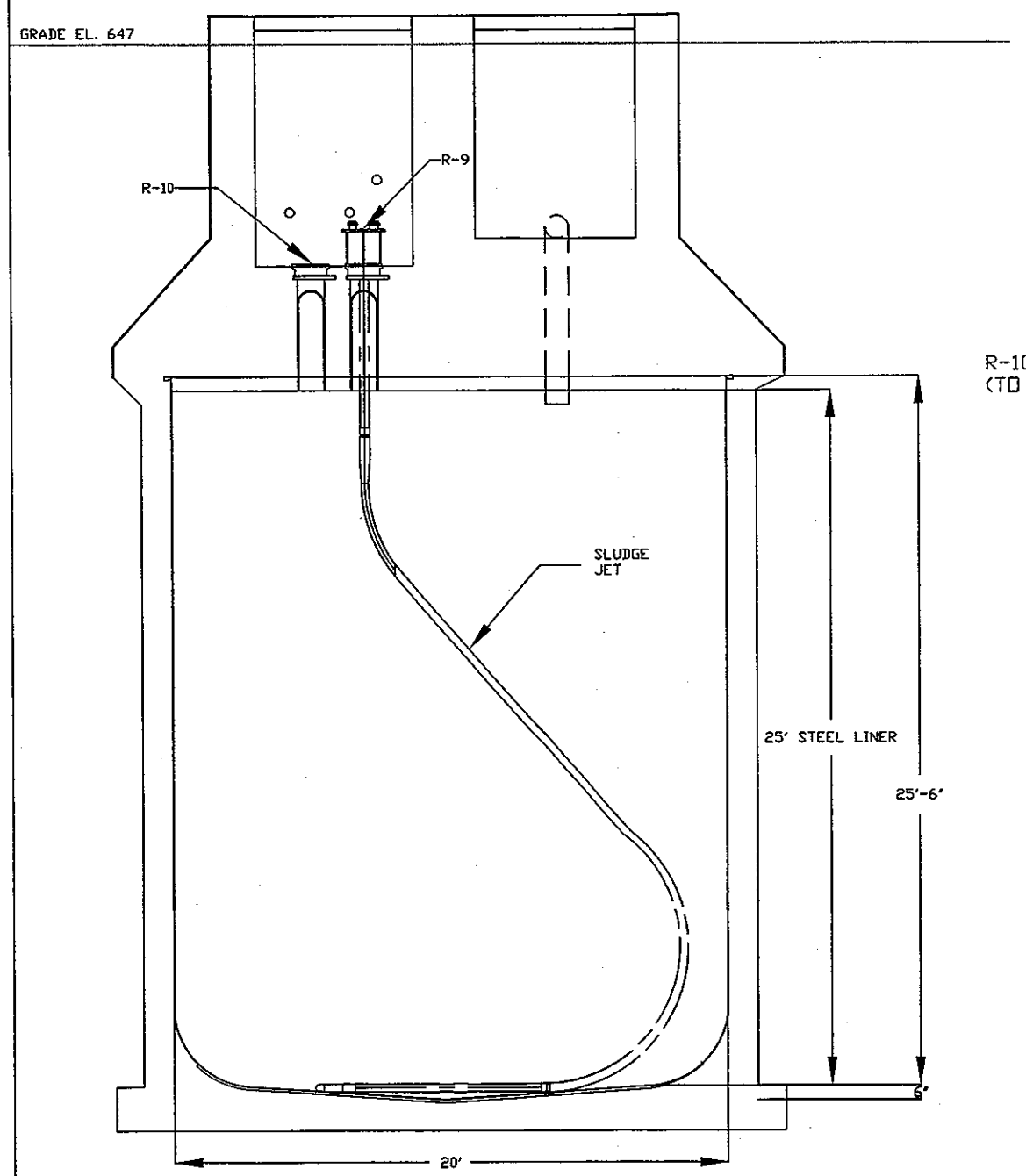

SECTION A-A

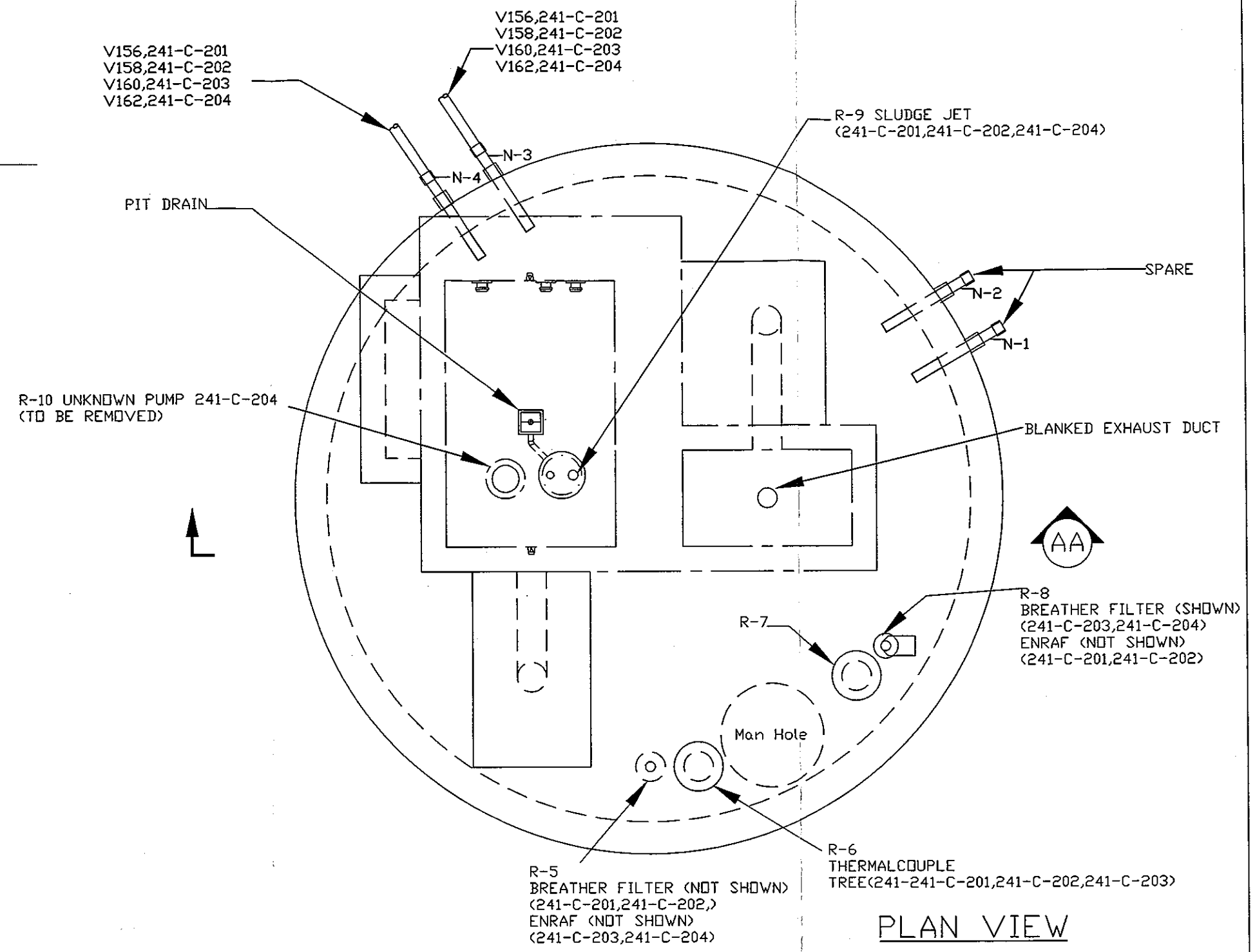

PLAN VIEW

APPROVALS	SIGNATURE	DATE
DWN BY	R. REISS	9/19/02
CHK BY	L. Ulbricht	9/19/02
PROJ MGR	C.Henderson	9/19/02
OTHER		
NEXT USED ON	CE-SK-02-100	

COLUMBIA ENERGY AND ENVIRONMENTAL SERVICES, INC

ATCD PRELIMIARY ENGINEERING
241-C-200
SERIES CONFIGURATION

SIZE	BLDG NO	PROJECT:	DWG NO	REV
B		15733	CE-SK-02-121	0

SCALE NONE

SHEET 1 of 1

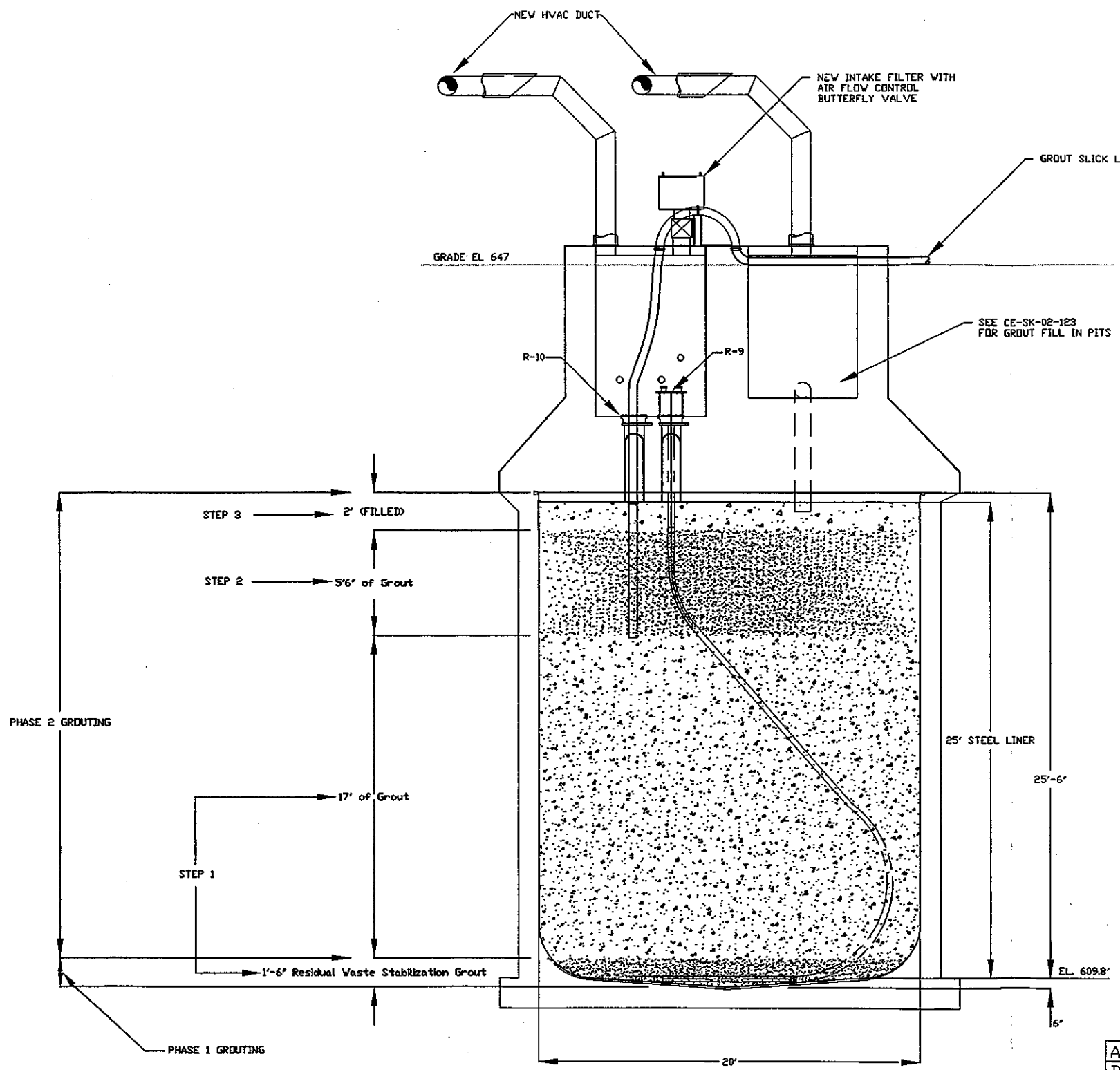

Configuration Notes	
STEP 1	
1	TREMIE INSTALLED
2	VIDEO CAMERA INSTALLED IN R-7 (NOT SHOWN)
3	VENTILATION INTAKE AT PUMP PIT
4	VENTILATION EXHAUST AT HVAC PIT
STEP 2	
1	NO TREMIE
2	VIDEO CAMERA INSTALLED IN R-7 (NOT SHOWN)
3	VENTILATION INTAKE AT PUMP PIT
4	VENTILATION EXHAUST AT HVAC PIT
STEP 3	
1	NO TREMIE
2	NO VIDEO CAMERA
3	VENTILATION INTAKE AND EXHAUST AT PUMP PIT COVER PLATE

APPROVALS	SIGNATURE	DATE
DWN BY	R. REISS	9/19/02
CHK BY	L. Ulbricht	9/19/02
PROJ MGR	C.Henderson	9/19/02
OTHER		

NEXT USED ON CE-SK-02-100

COLUMBIA ENERGY AND ENVIRONMENTAL SERVICES, INC

ATCD PRELIMINARY ENGINEERING
STABILIZED 241-C-200 SERIES

SIZE	BLDG NO	PROJECT:	DWG NO	REV
B		15733	CE-SK-02-122	0

SCALE NONE

SHEET 1 of 1

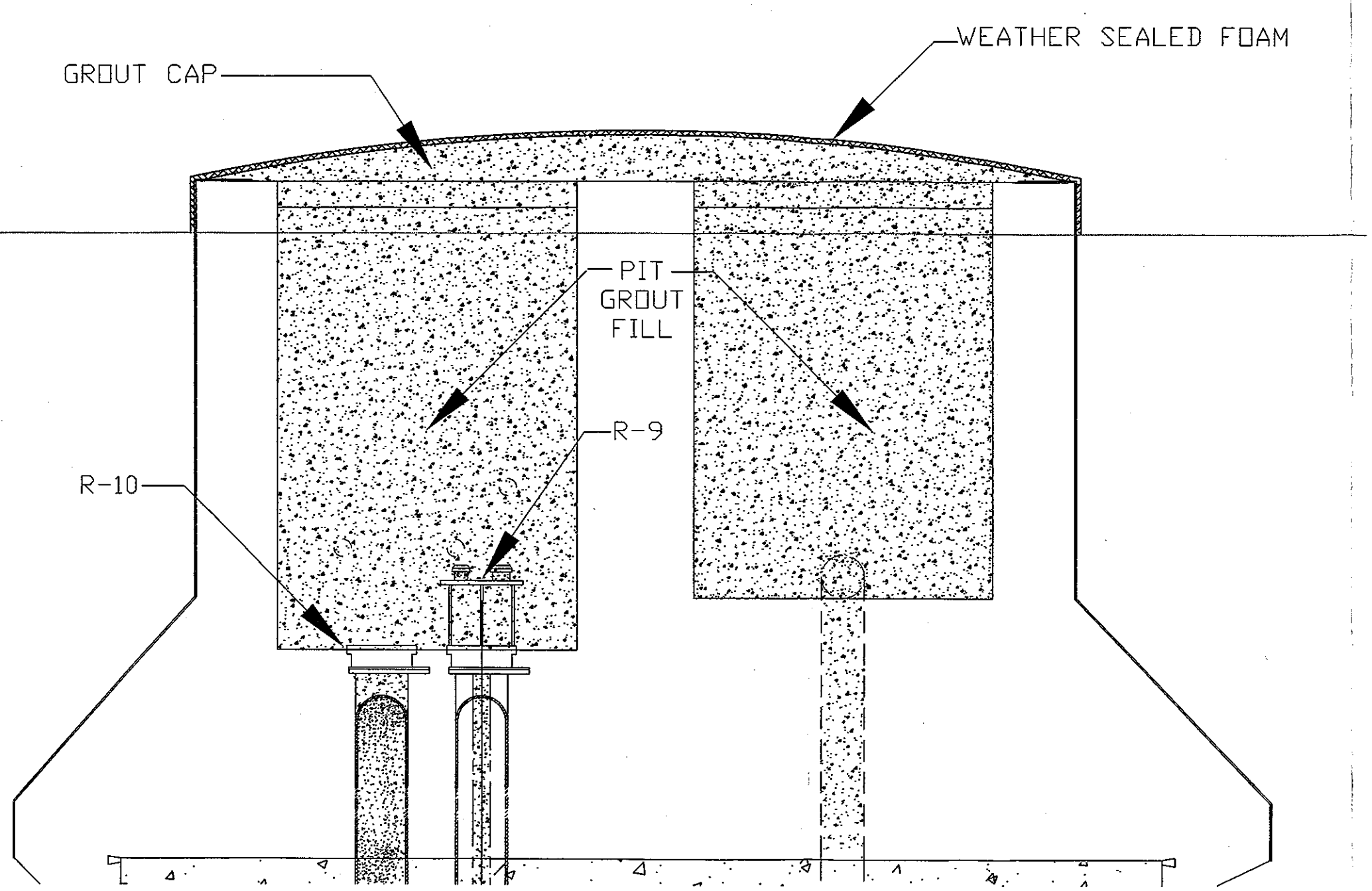

APPROVALS	SIGNATURE	DATE
DWN BY	R. REISS	9/19/02
CHK BY	L. Ulbricht	9/19/02
PROJ MGR	C.Henderson	9/19/02
OTHER		
NEXT USED ON	CE-SK-02-100	

COLUMBIA ENERGY AND ENVIRONMENTAL SERVICES, INC

ATCD PRELIMINARY ENGINEERING
241-C-200 SERIES

SIZE	BLDG NO	PROJECT:	DWG NO	REV
B		15733	CE-SK-02-123	0

SCALE NONE

SHEET 1 of 1

APPENDIX G
REVIEW DOCUMENTATION

This page intentionally left blank.

APPENDIX G
REVIEW DOCUMENTATION

This appendix documents the Accelerated Tank Closure Demonstration team review of the 90% Draft of this Basis of Design report. This appendix includes the following documentation:

- Review guidance provided to each of the reviewers
- Review kick-off meeting slides used to summarize the Draft Basis of Design report
- Attendance list from the review kick-off meeting
- Review Comment Records (RCRs) along with dispositions from each of the reviewers.

REVIEW GUIDANCE

Columbia Energy and Environmental Services, Inc. (Columbia Energy) completed preliminary engineering activities associated with tank closure of tank 241-C-106, and the four 241-C farm 200-series tanks. The results of these activities are presented in a Basis of Design report. A 90% complete report was submitted to CH2M HILL Hanford Group, Inc. for review. The following sections document the process used and the results of that review.

REVIEW PLANNING

The Design Verification procedure from HNF-IP-0842, Volume 4, Section 4.24 was consulted during the preparation of the review approach for this report. Potential reviewers were contacted and invited to a review kick-off meeting.

KICK-OFF MEETING

The review kick-off meeting was held on September 5, 2002 (agenda and attendance list attached). Relevant points from Columbia Energy's scope of work were included with the agenda and discussed. Columbia Energy staff presented an overview of the Basis of Design report. Hard copies of the draft report were distributed at the meeting. If an interested reviewer was unable to attend the kick-off meeting, a copy of the report was hand delivered to their office. A list of review topics (attached) was also provided to each reviewer as well as an assignment matrix to assist them in focusing their review and understanding the focus areas of other reviewers. The basis of the topics list was information contained in the Design Verification procedure.

COMMENTS RECEIVED

Review comments received were documented on Review Comment Record (RCR) forms. Columbia Energy and CH2M HILL staff considered the comments received. For each comment, a disposition was prepared and included on the RCR form. This information was provided back to each reviewer. Copies of the completed RCR forms are attached.

COMMENT INCORPORATION

Based on the disposition of comments received, Columbia Energy proceeded to incorporate changes and finalize the Rev. 0 version of the report.

Attendance List

Accelerated Tank Closure Demonstration Project

90% Complete Basis of Design Report

Review Kick-off Meeting

September 5, 7:30 – 9:30 AM

Name	Phone #
JOHN WINTERS	375-0683 x 212
Grant McCallum	947-098?
Colin Henderson	946-7111
David Comstock	372-5348
LARRY UZBRICHT	946-7111
GARY KELMEL	373-5898
JOHN VERDERBER	373-3644
Stacey Callison	372-9601
Ed Fredenburg	372-0435

AGENDA

Accelerated Tank Closure Demonstration Project
90% Complete Basis of Design Report
Review Kick-off Meeting
September 5, 7:30 – 9:30 AM

1.0 Introductions – All

2.0 Safety Topic – J. Winters

3.0 Meeting Overview – J. Winters

- 3.1 Items to be covered this morning
- 3.2 Scope of Work Excerpts – What did we ask Columbia Energy to do

4.0 ATCD Project – E. Fredenburg

- 4.1 Overview and Goals
- 4.2 Parallel Activities: Project Closure Plan, Data Assessment Report, Alternatives Generation and Analysis Report, Waste Retrieval Preliminary Engineering
- 4.3 Schedule: Basis of Design finalize report prior to Sept 30; Detailed Design for Tank Closure in FY03; Closure of C-106 by March 30, 2004 and four additional tanks by December 31, 2004

5.0 Overview of Basis of Design Report – C. Henderson

- 5.1 Guidance Documents: Prelim Engrg Scope of Work and Level 2 Specification
- 5.2 Discussion of Basis of Design Report

6.0 Reviewer Information – J. Winters

- 6.1 Assignment Matrix
- 6.2 Checklists
- 6.3 Comments Format

7.0 Review Schedule – J. Winters

- 7.1 Comments Due: COB Monday, Sept 9
- 7.2 Resolution Meeting: Thursday, Sept 12

EXCERPTS FROM PRELIMINARY ENGINEERING STATEMENT OF WORK (REQUISITION #87785)

TANKS C-106, C-201, C-202, C-203 AND C-204 CLOSURE PRELIMINARY ENGINEERING

TASK 2

Complete the preliminary engineering activities to address the necessary modifications, fill material placement, and associated surface restoration for the five tanks and selected ancillary equipment. It is assumed that the ancillary equipment will include above-tank pits, tank risers, and piping connected to the tank. For closure of the five tanks, the preliminary engineering shall identify the required new and upgraded structures, systems, and components (SSCs), including as applicable:

- Systems to delivery tank fill materials
- Needed physical interfaces with tank risers and associated above-grade support systems
- New pits, if needed, and modifications to existing pits or vaults
- Disconnects and isolation steps required for ancillary equipment
- Ventilation equipment
- In-tank cameras
- Motor controls
- Other instrumentation and controls
- New transformers, poles, and other electrical equipment upgrades needed to support the closure activities
- Other utility system upgrades
- Riser access requirements, including equipment removal required for access

To the maximum extent possible the closure activities should be planned using readily available materials, equipment, and technologies proven either by use at other DOE sites or in the commercial sector. Closure activities shall be designed to fit the existing risers as access points as no new penetrations into the tanks or enlargement of existing penetrations will be allowed.

In addition to the Level 2 Specification requirement, the bidder shall assume the following:

- Liquids and sludge will be removed from C-106 under a separate activity in accordance with the TPA M-45-00 milestone requirements. The heel jet pump will be removed from the center riser in order to perform retrieval.

- Sludge will be removed from C-200 series tanks in accordance with TPA M-45-00 milestone requirements under a separate activity.
- Tanks will be filled with grout. Vendor shall design the grout mix to meet the requirements of the Level 2 specification. This will be performed in two phases with the first phase limited to placement of an initial grout layer to stabilize tank waste residuals for an undetermined period (up to 20 years), until final closure decisions are made and authorized through regulatory permits. Final grout placement requirements will be identified in CHG's ATCD Alternatives Generation and Analysis report
- Equipment will be removed from tank risers to the extent required for grout placement. Other in-tank equipment will remain in tanks at closure.
- During the second phase of tank fill placement, tank risers will also be filled with grout.
- Overflow piping between tanks will isolated if necessary to prevent grout flow into adjacent tanks during the second phase of fill operations.
- No interim surface barriers will be placed.
- Decisions on final surface barrier for C-farm will be made later at the time of tank farm closure.
- No soil remediation will be performed. Decisions on soil remediation will be made at the time of final tank closure.

As part of Task 2, the Vendor shall prepare and submit for review by CHG an annotated outline for the Basis of Design report.

TASK 3

The Vendor shall prepare a ATCD Basis of Design report which presents the results of the preliminary engineering activities described in Task 2. The report will provide a description of all aspects of closure activities required for these tanks including a description of those modifications and additions identified in Task 2. The report will include conceptual level layout drawings (plans and sections for all tanks) that show the necessary changes/additions at each tank. The report will also provide vendor information, plans, and other elements necessary to define the design needs and establish a performance baseline for the project. The report will address (1) civil, (2) mechanical (piping and pit arrangement, equipment, ventilation, compressed air, and water); (3) electrical and I&C (power, instrumentation and controls, lighting, and cameras), (4) structural fill, (5) interfaces, and (6) any special support equipment needed for the closure activities. In summary, the Basis of Design report shall provide:

- A summary of the technical and regulatory requirements to be met by the closure design
- Identify project physical boundaries and interfaces with the remainder of C-Farm Tanks

- Detailed narrative and drawings of the tank closure activities, fill placement method, additions and/or modifications to existing structures, and associated utilities required to support tank closure activities.

The Basis of Design report will support detailed design and eventual procurement of construction services to complete the planned tank closure activities. The report will be submitted to CHG for review at the 90% draft stage, review comments will be resolved, and changes will be incorporated in preparation of a final report.

All activities will be performed in accordance with HNF-IP-0842, *RPP Administration*, Vol. 13, Sec. 1.4, *"Construction Project Management - Minor Projects"*, and other CHG procedures as applicable. Vendor procedures may also be used to perform the activities as long as the procedures provide the same level of compliance to Hanford Site requirements, and do not incur additional costs to the CHG or DOE. The vendor shall include in the project approach a design verification activity that meets the applicable verification level in accordance with HNF-IP-0842, *Volume 4 Engineering*, Section 4.24, *"Design Verification."*

90% COMPLETE BASIS OF DESIGN TANK CLOSURE REPORT – ATCD PROJECT

GENERAL REVIEW TOPICS

Project Item	System/Component Review Consideration	Reviewer Remarks as Necessary
1	Have assumptions necessary to perform the design task been adequately described and are they reasonable? Where necessary, have assumptions been identified for reverification when the design task has been completed?	
2	Have the appropriate quality assurance requirements been specified?	
3	Were sources of information identified?	
4	Are there any interface problems?	
5	Does the design represent the simplest approach to be consistent with functional requirements and expected service conditions?	
6	Can the equipment be readily assembled/ disassembled?	
7	Does the design minimize overall cost to the extent practicable?	
8	Have available data on similar designs been used?	
9	Does the design avoid any materials unproven for use in the anticipated environment?	
10	Can the assembly be stored for extended periods of time without degrading effects?	
11	Has the design appropriately considered maintenance, operations, and reliability, including maintenance procedures and techniques, unique maintenance requirements, and frequencies?	
12	Can the design and its parts be easily inspected for conformance to engineering specifications?	
13	Has adequate accessibility been provided for in-service inspection?	
14	Does the design meet all established safety requirements?	
15	Have necessary features been provided to maintain personnel radiation exposure ALARA?	
16	Can the hardware be adequately disposed of after use if it is radiologically or chemically contaminated?	

Project Item	System/Component Review Consideration	Reviewer Remarks as Necessary
17	Have human factors engineering and operability been considered?	
18	Is the equipment, system, or facility operable?	
19	Has the need for safety analysis of this design been determined?	
20	Is the equipment, system, or facility covered by an existing safety analysis report (if not, will the safety analysis be completed in time to incorporate findings of the analysis in the design?)	
21	Do the reliability, availability, and maintainability (RAM) analyses of the design support the RAM requirements?	
22	Is a single point failure analysis required?	
23	Have availability of power requirements for the project been verified?	
24	Is the design in compliance with applicable regulatory requirements and/ or regulatory commitments?	

ADDITIONAL REVIEW TOPICS

This topics list is from HNF-IP-0842, Vol. 4, Section 4.24. Columns have been added on the left side of the page to identify those areas that apply to the preliminary engineering (PE) activities presented in the Basis of Design report, what topics will likely be covered in the future detailed design effort and what topics are not applicable for the ATCD project. The focus of the Basis of Design report review should be on the PE categories.

1.0 Design Process Regulatory Requirements (10 CFR 835)

PE*	DD*	NA*	
X			1.1 What plans do the designers have or what actions have they already taken to ensure that doses will be ALARA through the combined use of facility and equipment design and administrative control?
X			1.2 How are designers implementing the requirement that physical design features be the primary methods used to maintain exposures ALARA (e.g., confinements, ventilation, remote handling, and shielding)?
	X		1.3 For cases where administrative controls are to be used, how were design features demonstrated to be impractical so that administrative controls are justified?
	X		1.4 How are the designers ensuring that administrative controls can be practically implemented in cases where design features are demonstrated to be impractical?

PE*	DD*	NA*	
	X		1.5 For design of new facilities and modifications of existing facilities, how do the designers plan to use or how are they using optimization methods (ALARA decision-making methods) to assure that occupational exposure is maintained ALARA in developing and justifying the facility design and physical controls?
	X		1.6 For design of new facilities and modifications of existing facilities, how do the designers plan to meet or how are they meeting the design objective to maintain exposure levels ALARA and below an average of 0.5 mrem/hr in continuously occupied areas (2000 hours/year)?
	X		1.7 For design of new facilities and modifications of existing facilities, how do the designers plan to meet or how are they meeting the design objective to maintain exposure levels ALARA and below 20% of the applicable standard in 835.202 in areas not continuously occupied (less than 2000 hours/year)?
X			1.8 For design of new facilities and modifications of existing facilities, how do the designers plan to meet or how are they meeting the design objective to avoid, under normal conditions, releases of airborne radioactive material to the workplace atmosphere?
	X		1.9 For design of new facilities and modifications of existing facilities, how do the designers plan to meet or how are they meeting the design objective to control, in any situation, the inhalation of radioactive material by workers to levels that are ALARA?
X			1.10 How do the designers plan to meet or how are they meeting the objective that the design or modification of the facility and the selection of materials include features that facilitate operations?
	X		1.11 How do the designers plan to meet or how are they meeting the objective that the design or modification of the facility and the selection of materials include features that facilitate maintenance?
X			1.12 How do the designers plan to meet or how are they meeting the objective that the design or modification of the facility and the selection of materials include features that facilitate decontamination?
		X	1.13 How do the designers plan to meet or how are they meeting the objective that the design or modification of the facility and the selection of materials include features that facilitate decommissioning?
	X		1.14 What is the plan to use monitoring during routine operations to demonstrate that exposure levels are ALARA?

**PE stands for Preliminary Engineering, DD stands for Detailed Design and NA stands for not applicable.

2.0 Facility Lay-Out

PE	DD	NA	
X			2.1 Review the general configuration of the facility, considering traffic patterns, location of the radiation areas, location and size of the changing rooms, adequacy of personnel decontamination facilities, location of the fixed survey equipment, and adequacy of space for anticipated operations, maintenance, production, research, and decommissioning. Facility design and selection of materials shall include features that facilitate operation and maintenance, decontamination, and decommissioning.
X			2.2 Verify that the design shall be able to maintain personnel entry control for each radiological area, commensurate with existing or potential radiological hazards within the area, by using one or more of the methods listed in 10 CFR 835.501.
	X		2.3 Verify that the entrance of each access point to high and very high radiation areas shall have control features.
	X		2.4 Equipment and controls are located for accessibility and to minimize radiological exposure to personnel during normal operations, shut-down, maintenance, anticipated operational transients, and postulated accident conditions.
	X		2.5 Develop facility lay-out and personnel traffic routes to minimize radiological exposures to personnel
	X		2.6 Accessibility requirements for the maintenance, inspection, removal, or replacement of equipment considered potential radiological exposure to personnel.
		X	2.7 Doorways and labyrinths are wide enough to permit personnel, component, and equipment passage.
	X		2.8 Evaluate and confirm the adequacy of specific control devices for reducing occupational exposures, including shielding, hoods, glove boxes, containments, interlocks, barricades, shielded cells, decontamination features, and remote operations.
	X		2.9 Are areas of the facility that exhibit high occupancy, or are presently uncontrolled, adequately protected from new or increased radiation sources?
X			2.10 Is maximum distance provided between serviceable components and any substantial radiation sources in the area?
X			2.11 Does the design change protect the public and facility personnel from hazards associated with the use of radioactive and other hazardous materials as a result of normal operations, anticipated operational occurrences, and design basis accidents conditions, including the effects of natural phenomena pertinent to the site while maintaining ALARA?
	X		2.12 Does the project protect government property and essential operations from the effects of potential accidents?

3.0 Installation Considerations

PE	DD	NA	
X			3.1 Modular components or other design considerations are utilized to reduce the duration of construction or installation activities in the area.
	X		3.2 Bolted rather than welded flanges are used for quick removal where appropriate.
	X		3.3 Built-in rigging provided for ease of installation.
	X		3.4 Is the equipment ready for service as received?
	X		3.5 Does the equipment require modification prior to installation? If so, is the modification reflected in applicable documents, and can the modification be performed in a non-radiologically controlled area?
	X		3.6 Have the radiological conditions in areas not routinely accessed been adequately characterized? Are any assumptions made about them valid?
	X		3.7 For tasks that have historical dose data, has this data been reviewed?

4.0 Maintenance and Operations

PE	DD	NA	
		X	4.1 Permanent platforms, walkways, stairs, or ladders are provided to permit accessibility.
	X		4.2 Serviceable components are capable of being isolated and drained.
	X		4.3 Flange components are provided for quick removal of high maintenance components.
	X		4.4 Installation design provides for rapid removal.
X			4.5 Surveillance can be performed from outside a high radiation area through the use of TV camera, viewing port, or remote read-out.
	X		4.6 Built-in rigging is provided to facilitate component handling.
	X		4.7 Components are designed to facilitate flushing and decontamination.
	X		4.8 Components are designed and selected with consideration for long service life, ease of removal, and frequency of maintenance.
X			4.9 Serviceable components are easily accessible with adequate work space, lay-down areas, and lighting.
X			4.10 Design features prevent personnel from inadvertently entering high radiation areas.
	X		4.11 Special provisions are made for ease of maintenance and operation of equipment.
	X		4.12 Equipment cover plates are hinged or captive quick-opening fasteners are used to facilitate routine personnel access or maintenance access.
	X		4.13 Life expectancy and reliability of the chosen equipment for their selection and location are considered to minimize personnel access in the area.

PE	DD	NA	
	X		4.14 Electrical, mechanical, or hydraulic quick release mechanisms are used, where possible, for insulation, sample bombs, electrical connections, and even entire skids.
	X		4.15 Remote operators or robotics are considered for use in high radiation areas.
	X		4.16 Equipment has been selected to ensure their functionality in the radiological environment as required for normal, upset, and accident conditions.

5.0 Shielding

PE	DD	NA	
	X		5.1 Shielding analysis has been performed.
	X		5.2 Entrances to high radiation areas are adequately shielded (e.g., labyrinth).
	X		5.3 Radioactive equipment is separated by shielding from non-radioactive equipment (to minimize exposure to personnel in adjacent areas).
	X		5.4 Shield penetrations are minimized in size and number.
	X		5.5 Shield penetrations are located high on the wall and in a corner to avoid line-of-sight streaming.
	X		5.6 If the answer to 5.5 is "No," are the penetrations adequately shielded or sealed (e.g., use of high-density sealant or equivalent)?
	X		5.7 Permanent shielding is employed, to the degree feasible, to avoid the need for temporary shielding.
	X		5.8 If permanent shielding is not feasible, provisions are made to allow temporary shielding during maintenance activities.
	X		5.9 Is shielding placed between serviceable components and any substantial radiation source in the area?
	X		5.10 Are shields employed to prevent streaming of radiation through doors, pipes, and duct penetrations (e.g., labyrinths or shadow shields)?
	X		5.11 Is an adequate safety margin applied to seismic load analysis to accommodate the additional load from temporary shielding?
	X		5.12 Have shielding calculations and design been verified to meet ALARA requirements?
	X		5.13 Have the shielding calculations, including the basic assumptions, been reviewed by an independent, competent reviewer?

6.0 Contamination Control

PE	DD	NA	
X			6.1 Corrosion-resistant material is used for piping and equipment.
		X	6.2 Low cobalt material is used for piping and equipment in contact with primary reactor coolant.
	X		6.3 Curbs are provided to control spread of liquid spills. Can containment be established to reduce the spread of contamination; i.e., cribs, catch pans, drip pans, or cofferdams?
		X	6.4 Radioactive floor drains are inside the curbs.
		X	6.5 Floors slope toward the drains.
		X	6.6 Easily decontaminable coatings have been specified.
X			6.7 Ventilation is provided to control airborne radioactivity
		X	6.8 Drain lines are sloped continuously and back-flooding is prevented.
	X		6.9 Surfaces that could be contaminated are made non-porous or sealed for ease of decontamination. Are rough surface finishes such as crevices, hole, notches, recesses, socket-head cap screws, and knurled finishes avoided?
	X		6.10 Consider design measures to minimize potential releases of solids, liquids, or gases to reduce contamination when the design requires the breaching of a system that may contain radioactive material.
	X		6.11 Where material might become activated, materials with low activation potential and corrosion-resistant materials are used as much as possible.
	X		6.12 Where material might become activated, proper chemical and flow control is used to minimize erosion and corrosion.
	X		6.13 Preclude by design cross-connections of radioactive drains with non-radioactive drains.
	X		6.14 Does the design incorporate features that will reduce the likelihood of cross-contamination of clean systems and unmonitored release pathways?

7.0 Liquid Systems – Tanks, Pumps, and Sumps

PE	DD	NA	
	X		7.1 Pumps are located apart from tanks they serve (so exposure rates from tanks do not increase maintenance exposures.)
	X		7.2 Pumps are fitted with catch basins that are properly drained.
	X		7.3 Pump casings are provided with equipment drains.
	X		7.4 Pump seals are covered to prevent contaminated liquids from being projected from the pump.
	X		7.5 Vents are provided.
	X		7.6 Pumps requiring frequent maintenance are equipped with flanged connections for easy removal.
	X		7.7 Canned pumps or mechanical seals are employed instead of standard packing glands.
	X		7.8 Tanks and sumps are provided with a mechanism for flushing and decontamination.
	X		7.9 Vents and relief tail pipes are routed to drains.
	X		7.10 Components are designed to facilitate draining, flushing, and cleaning by chemical or mechanical means.
	X		7.11 Agitators or other devices are provided in tanks or other vessels to ensure adequate mixing and to minimize localized radioactivity build-up.
	X		7.12 Tanks and other vessels are designed with conical or dished bottoms with a central drain and spargers to remove radioactive sediment.

8.0 Liquid Systems – Valves

PE	DD	NA	
	X		8.1 Valves are located away from tanks, filters, demineralizers, etc., where practical.
	X		8.2 Process valves are remotely operated, where needed.
	X		8.3 Valves are mounted with the stem facing up, where practical.
	X		8.4 Platforms are provided for valve maintenance.
	X		8.5 There is sufficient space around the valve for efficient maintenance.
	X		8.6 Valve designs minimize cavities and crevices.
	X		8.7 The design eliminates the use of cobalt-containing materials for parts or components (e.g., valve trim, seats, pins, etc.) that could be in a flow path leading to a reactor core.
	X		8.8 The design maximizes the removal of cobalt particulates from systems that can interface with reactor coolant systems.
	X		8.9 Valves can be installed or removed without cutting or welding.
	X		8.10 Manual valve operators are used only for infrequently operated valves.

9.0 Piping

PE	DD	NA	
	X		9.1 Crud traps are minimized and stagnant legs avoided.
	X		9.2 Socket welds are avoided.
X			9.3 All sections of piping can be adequately drained.
	X		9.4 Vents are provided and piping can be flushed or hyrdolased.
	X		9.5 Piping run is in a shielded pipe case, where needed.
	X		9.6 Piping run lengths and horizontal runs are minimized.
	X		9.7 Field joins are minimized
	X		9.8 Piping that potentially contains radioactive contaminants is physically separated from non-radioactive piping.
	X		9.9 Use of field-run piping is avoided.
	X		9.10 System piping is designed to eliminate or minimize dead legs, stand pipes, or low points.
	X		9.11 Drains are provided at unavoidable low points and dead legs to flush out radioactive residues.
	X		9.12 All piping or tubing connections for tritium processes are inside a ventilated hood or glove box and positive sealing connections are used.

10.0 Slurry Systems

In addition to considerations for liquid systems, systems containing slurries should also meet the criteria below.

PE	DD	NA	
	X		10.1 Sharp bends in pipes are avoided (5 x diameter or greater bends are acceptable.)
	X		10.2 Check valves or strainers are provided at interfaces with liquid systems.
	X		10.3 Back-flush connections and/or hydrolyzing ports are provided.
	X		10.4 Spent resin or slurry piping is designed with full-ported valves and without screwed connections and orifices.
	X		10.5 Spent resin or slurry piping are sloped downward and designed to maintain turbulent flow and to minimize pipe connections and fittings.
	X		10.6 Piping tees in resin or slurry piping are designed to ensure that the normal flow is through the straight portion and the branch line is located above the run.

11.0 Instrumentation

PE	DD	NA	
	X		11.1 Instrument read-outs are located in the lowest radiation area feasible.
	X		11.2 Instrument taps on liquid systems are located above the piping mid-plane.
	X		11.3 Existing radiation monitors are appropriate in terms of types and locations. (If "No," indicate how existing radiation monitoring systems should be modified or new systems that will be required.)
	X		11.4 Instruments and controls are grouped functionally to minimize time spent in the area.
	X		11.5 Instruments are selected and specified for long service life and low maintenance requirements.
	X		11.6 Provisions are made for remote calibration.
	X		11.7 Instruments can be flushed to reduce crud accumulation.
	X		11.8 Assess the adequacy of planned radiation monitoring and nuclear criticality safety instrumentation, including whether the proposed instrumentation is appropriate for the expected types and intensities of radiation, and whether it has sufficient redundancy and capability for operation under normal operating conditions and in emergencies.
	X		11.9 Read-outs or control points for instruments and controllers are located outside of radiation areas.
	X		11.10 Radiation monitoring system channels have both local and remote readouts and alarms, with readouts in a central location if appropriate.
	X		11.11 Radiation monitoring systems have circuitry indicating component failure and built with fail-safe capabilities.
	X		11.12 Instruments using radioactive or contaminated working fluid contain a minimum quantity of working fluid.
	X		11.13 Effluent airborne and off-line process monitor lines and sampler lines are as short as possible and heat-traced and insulated, as necessary, to minimize line loss, water condensation, and radioactivity build-up.

12.0 Ventilation

PE	DD	NA	
X			12.1 Provisions are made for ventilating the area.
	X		12.2 The flow of air is from areas of lesser contamination to areas of greater contamination.
	X		12.3 Filter banks are readily accessible for maintenance.
	X		12.4 Filter banks are separated or shielded from each other to permit working on one with the other operating.
	X		12.5 The ventilation system (exclusive of filters) is designed to minimize radioactivity build-up.
	X		12.6 Ventilation ducts have clean-out ports for decontamination.
	X		12.7 Verify that the design of the confinement and ventilation systems provide the required level of protection from airborne contamination, giving particular attention to patterns of air flow and to the locations of air inlets, penetrations, and exhausts. Releases of radioactive material to the workplace atmosphere shall be avoided under normal operating conditions and inhalation of such materials by workers shall be controlled to the extent reasonably achievable.
	X		12.8 Direction of ventilation flow is maintained from areas of lower potential airborne radioactivity to areas of higher potential airborne radioactivity.
	X		12.9 Ducts carrying clean air are located to eliminate, where possible, their passing through radiologically controlled areas and are at positive pressure where they pass through areas of potential airborne radioactivity.
	X		12.10 All process fittings, valves, and equipment for tritium processes are inside a ventilated hood or glove box.
	X		12.11 Ducts containing potentially contaminated air are at negative pressure if they pass through clean areas.
	X		12.12 Changes in direction for duct work containing potentially contaminated air are minimized.
	X		12.13 Fans or blowers in ventilation systems containing potentially contaminated air are located downstream of filters.
	X		12.14 Air hoods or glove box openings have sufficient linear air velocity for their service conditions.

13.0 Filters and Demineralizers

PE	DD	NA	
	X		13.1 Vents and relief valve tail pipes are routed to drains.
	X		13.2 Filters and demineralizers have been assessed as radiation sources.
	X		13.3 Multiple filters or demineralizers are housed in separate cubicles to permit maintenance
	X		13.4 Filter cartridge sizes are common to other filters already in use at the plant.
	X		13.5 Filters are designed to minimize servicing frequency.
	X		13.6 Filters are designed for efficient removal.
	X		13.7 Filters are located in low occupancy and low traffic areas.
	X		13.8 Filters are provided for remote or shielded methods of filter removal.
	X		13.9 Submicron filters are employed, as applicable.
	X		13.10 System filters are provided upstream of heat exchangers or demineralizers.

14.0 Implementation Requirements

PE	DD	NA	
	X		14.1 Temporary shielding.
	X		14.2 Additional or temporary ventilation.
	X		14.3 Temporary containments.
	X		14.4 Decontamination of systems, components, and/or work areas.
	X		14.5 System flushing.
	X		14.6 Tool list.
	X		14.7 Special installation.
	X		14.8 Quality Assurance/Quality Control inspection/hold points.
	X		14.9 Support work (scaffolding, etc.).
	X		14.11 Safety.

15.0 Breathing Air and Cooling Systems

PE	DD	NA	
		X	15.1 Are breathing air and cooling systems being planned, if needed?
		X	15.2 Are the system specifications adequate?

16.0 Waste Minimization

PE	DD	NA	
	X		16.1 The volume of radioactive waste generated is minimized by operation of the system or equipment (e.g., minimize the quantity or volume of consumables, use high capacity filter elements, use mechanical seals rather than packings on rotating equipment.)
	X		16.2 Non-radioactive waste (e.g., oil, refrigerant) is segregated from potential contamination to preclude the generation of mixed waste.

17.0 Post-Construction Review of Effectiveness

PE	DD	NA	
	X		Are there plans for a post-construction review of effectiveness of engineering features to reduce dose and the spread of radioactive materials to provide feedback to the design engineers and help refine the design process?

18.0 DECOMMISSIONING CONSIDERATIONS

PE	DD	NA	
	X		18.1 Use modular, separable confinements for radioactive materials to preclude contamination of fixed portions of the structure.
	X		18.2 Long runs of buried contaminated piping will be avoided and provisions will be included in the design to ensure the integrity of joints in buried pipelines.
	X		18.3 Designs that ease cut-up, dismantlement, removal, and packaging of contaminated equipment from the facility (e.g., glove boxes, filtration equipment, duct work, etc.).
	X		18.4 Use of modular shielding in lieu of monolith shielding walls.
	X		18.5 Use of lifting lugs on equipment.
	X		18.6 Fully drainable piping systems that carry contaminated products.

REVIEW KICK-OFF MEETING SLIDES

ATCD Basis of Design

September 5, 2002

Scope

- Scope
  - Work plan and annotated outline for the *Basis of Design Report* have been completed and approved.
  - Preliminary engineering for filling the 5 demonstration tanks with grout
  - Basis of Design Report – documents preliminary engineering activities
    - Conceptual level layouts
    - Provide vendor information, plans, and other elements necessary to establish performance baseline
    - Summarize technical and regulatory requirements
    - Identify project physical boundaries and interfaces
    - Detailed narrative and drawings of tank closure activities and fill placement methods including additions and/or modifications to existing SSCs.

Level 2 Specification

- Establishes performance specification for tank closure fill system
- Tank closure fill system – grout delivery system and tank fill process.
- Specific requirements for tank closure are being negotiated.
- Identifies performance objectives – to be established through risk assessments and closure plans
- Tank fill – 2 Phases
  - Heel Stabilization - contact, structural, retrievable
  - Tank Fill – structural stability of the tank dome to prevent subsidence
- Tank fill process
  - Use readily available and proven materials, equipment, and technologies
  - Identifies a number of process requirements

Basis of Design Report

- Defines activities associated with stabilizing waste heel and filling tanks
  - Section 1 – Introduction
  - Section 2 – Enabling Assumptions
  - Section 3 – Initial Conditions
  - Section 4 – Technical and Regulatory Requirements
  - Section 5 – Project Boundaries and Interfaces
  - Section 6 – Project and Operational Description
  - Section 7 – Project Development (tank fill system)
  - Section 8 – Cost and Schedule
  - Appendix A – Cost and Schedule Detail
  - Appendix B – Applicable Specifications
  - Appendix C – Calculations
  - Appendix D – Regulatory Compliance
  - Appendix E – Level 2 Spec Cross Walk
  - Appendix F – Grout delivery and Placement Cross Walk
  - Appendix G – Sketches

Assumptions

- Waste retrieval will be completed prior to initiating waste/tank stabilization
- Grout will be used to stabilize the residual waste and fill the tank. A grout formulation was assumed based on Savannah River grout formulation work.
- Ancillary equipment includes tank risers, at tank pits, and waste transfer lines that penetrate the tank.
- The tanks will be filled in a series of lifts in two separate phases. Initial phase = heel stabilization, second phase = tank fill (including risers and pits). Second phase will be conducted immediately following the first phase. Note: no need for retrievable grout in phase one with this assumption
- No surface barriers or soil remediation
- In tank equipment and debris will be grouted in place to the extent practical
- Retrieval activities will remove equipment and leave an empty riser for grout placement. For C-106 the heel jet pump will have been removed.

Tank Stabilization Overview

- Portable Grout Plant
  - 2 production lines
  - Continuous mix
  - Adjacent to tank farm
- Delivery to Tank
  - Pumped through slickline
- Placement in Tank
  - Single/Central riser
  - Multiple lifts

Plant Site Prep – Outside Farm

- Relocate existing storage containers
- Utilities to grout plant
  - Raw water
  - Compressed air
- Utilities to construction trailer
  - Telephone
  - Power
- Construction fence
- Sand storage area

C-106 Pre-Stabilization

- Heel pump removed by retrieval
- Cascade line isolation
- Heel pit cover plate modification
- Ventilation system
  - Portable exhauster
  - Duct to heel pit
  - Intake filter on heel pit
- Slickline
- Video camera

C-106 Heel Stabilization

- HVAC Configuration
- Tremie
- Video Camera

C-106 Tank Stabilization

- Phase 1
  - Configuration same as heel stabilization
- Phase 2
  - No video camera
  - No tremie
- Phase 3
  - HVAC reconfigured

C-200 Pre-Stabilization

- Riser R-10 left empty by retrieval
- New pump pit cover plates
- Ventilation system
  - Portable exhauster
  - Duct to both pits at each tank
  - Intake filter on each pump pit
- Slickline
- Video camera

C-200 Heel Stabilization

- HVAC configuration
- Tremie
- Video camera
- Tanks successively stabilized

C-200 Tank Stabilization

- Phase 1
  - Same configuration as heel stabilization
- Phase 2
  - No tremie
- Phase 3
  - No video camera
  - HVAC reconfigured

Ancillary Equip Stabilization and Post Stabilization

- Equipment, Riser, and Pit Stabilization
  - Empty risers not in pits
  - In-tank equipment not in pits
    - Thermocouple trees
    - Enraf
  - In-tank equipment and risers in pits
    - Slurry pump, sluicer, dipleg, & transfer pump
    - Sludge jet
- Post Stabilization
  - Intrusion prevention
  - Benchmarks

REVIEW COMMENT RECORDS

The following is a listing of the reviewers and the number of sheets of comments provided.

Reviewer Name	Number of RCR pages
Stacey Callison	5 pages
Dave Comstock	3 pages
Bill Grams	2 pages
Gary Kelmel	5 pages
Steve O'Toole	2 pages
J. J. Verderber	1 page
Gary Wells	4 pages
John Winters	10 pages

REVIEW COMMENT RECORD (RCR)

1. Date 9-9-02	2. Review No.
3. Project No. ATCD Project Basis of Design for Tank Closure	4. Page 1 of 5

5. Document Number(s)/Title(s)	6. Program/Project/Building Number	7. Reviewer	8. Organization/Group	9. Location/Phone
CES-0014 Draft ATCD Basis of Design	ATCD Project	Stacey Callison		

17. Comment Submittal Approval:	10. Agreement with indicated comment disposition(s)	11. CLOSED
Organization Manager (Optional)	Stacey W. Callison Reviewer/Point of Contract 9-17-02 Date Author/Originator	Stacey W. Callison Reviewer/Point of Contact 9-17-02 Date Author/Originator

12. Item	13. Comment(s)/Discrepancy(s) (Provide technical justification for the comment and detailed recommendation of the action required to correct/resolve the discrepancy/problem indicated.)	14. Reviewer Concurrence Required	15. Disposition (Provide justification if NOT accepted.)	16. Status
1	Sections 3.1.2 and 3.1.3 There are many diversion boxes located inside the C Tank Farm fence and considered a part of the C Tank Farm ancillary equipment including the 244-CR Vault. For section 3.1.2 suggest deleting the last sentence. For section 3.1.3 suggest that the cesium loadout facility and the C-106 sluicing equipment be referenced as ancillary equipment in the vicinity of the C-106 tank.		Comment incorporated. Sections 3.1.2 and 3.1.3 modified for clarity.	
2	Also for Section 3.1.3 First sentence, add "vaults, diversion boxes" in the ancillary equipment brackets.		Comment incorporated.	
3	Section 3.1.3 Fourth sentence – The cesium loadout facility is located near the east corner of the tank farm.		Comment incorporated.	
4	Figure 3.1 The fence line of the C Tank Farm is not accurate. At this scale the accuracy of the fence line isn't that important, but the square and label for the 244-CR Process Vault should be removed from the figure.		Comment incorporated.	

A-6400-090.1 (11/99)

REVIEW COMMENT RECORD (RCR)	1. Date 9/9/02	2. Review No.
	3. Project No. ATCD Project Basis of Design for Tank Closure	4. Page 2 of 5

12. Item	13. Comment(s)/Discrepancy(s) (Provide technical justification for the comment and detailed recommendation of the action required to correct/resolve the discrepancy/problem indicated.)	14. Reviewer Concurrence Required	15. Disposition (Provide justification if NOT accepted.)	16. Status
5	Figure 3.2 Figure 3.2 is from the DRAFT Data Assessment Report and is the C-104 tank. The attached figure is a more accurate representation of the C-106.		Comment incorporated. Figure 3-2 was replaced with appropriate figure.	
6	Section 3.2.1 Second paragraph, first sentence – add, "waste storage" prior to "capacity".		Comment incorporated.	
7	Section 3.2.1 After the first sentence add the following sentence – "The total void volume of the C-106 tank, which includes the waste storage capacity volume plus the dome space volume is 849,000 gallons."		Comment incorporated.	
8	Section 3.3.1 Fourth sentence – Change "dome" to "ceiling".		Comment incorporated.	
9	Sections 3.4.3, 3.5.3, 3.6.3, and 3.7.3 I don't recall the 3-inch diameter pipelines protruding into the C-200 tanks 4 feet. I may be wrong and don't have time to go back and look, but a 4 foot protrusion doesn't seem accurate from my memory of the tank videos. Also most figures and I believe the videos show four pipe inlets into each of the C-200 series tanks. It may be beneficial to mention that two inlets are spares and are not believed to be connected to piping.		Comment incorporated.	
10	Section 4.1.1, page 4-2 The WAC quoted paragraphs beginning with "(b)" and "(I)" are repeats, delete these paragraphs on page 4-2.		Comment incorporated.	
11	Section 6.0 Fourth paragraph, Replace third sentence with "The density of the grout will be such that as to allow for potential displacement or floating of any free or unbound residual tank waste."		Comment incorporated.	

A-6400-090.1 (03/99)

REVIEW COMMENT RECORD (RCR)

1. Date 9/9/02	2. Review No.
3. Project No. ATCD Project Basis of Design for Tank Closure	4. Page 3 of 5

12. Item	13. Comment(s)/Discrepancy(s) (Provide technical justification for the comment and detailed recommendation of the action required to correct/resolve the discrepancy/problem indicated.)	14. Reviewer Concurrence Required	15. Disposition (Provide justification if NOT accepted.)	16. Status
12	Section 6.1.1 For the C-106 tank, the retrieval project may leave retrieval equipment in place for closure rather than retrieving and decontaminating. If the MRS mast is used in the central riser it may need to be cut off for placement of a tremie into the central riser. Or the mast and articulated arm could potentially be suitable for use as a tremie. Or other nearby risers (R-14?, 4 inch, at surface, does not require pit access) could be used for grout placement. Other risers may require an increase in the flowability of the grout. For the C-200 series tanks the use of a centrally located riser for the grout pour should not be necessary. I would recommend using one of the empty surface risers. By using a surface riser issues for pit access would not be required and issues around removing or cutting or using abandoned retrieval equipment could be avoided.		Comment partially incorporated. Text changed to address disposition of equipment abandoned in place by the retrieval project. Other comments noted for consideration during detail design.	
13	Section 6.1.2 Third paragraph, last sentence – Not knowing where building C-73 is, wouldn't it be simpler to specify an air compressor for the portable grout plant rather than extending air service from the C-73 building and having to rely on and interacting with plant forces for compressed air?		No change. Comment noted for consideration during detail design.	
14	Section 6.2.1 Need to better describe the 12-inch lift. That is a 12 inch lift along the C-106 and C-200 series straight wall is 165 cy and 12 cy, respectively. A volume of 165 cy at the bottom of the C-106 gives a depth of grout at the center of the tank of 20 inches. A volume of 12 cy at the bottom of the C-200 series tanks also gives a depth of grout at the center of the tank of about 20 inches. The initial waste stabilization grout fill will be very sensitive to grout volume especially when reversability is considered. For the first waste stabilization grout lift I suggest that only enough grout be put in to cover the entire tank bottom by an inch or two. Following the first lift I suggest that the second waste stabilization lift be only a few		No change. The specific volumes required for residual waste heel stabilization have yet to be specified and have little impact to the presented concept. This will be resolved during detail design.	

A-6400-090.1 (03/99)

REVIEW COMMENT RECORD (RCR)	1. Date 9/9/02	2. Review No.
	3. Project No. ATCD Project Basis of Design for Tank Closure	4. Page 4 of 5

12. Item	13. Comment(s)/Discrepancy(s) (Provide technical justification for the comment and detailed recommendation of the action required to correct/resolve the discrepancy/problem indicated.)	14. Reviewer Concurrence Required	15. Disposition (Provide justification if NOT accepted.)	16. Status
	inches, say 6 inches. For the C-106 tank to cover the entire bottom by at least a couple of inches the grout at the center of the tank would be 15 inches (100 cy). For the second lift of 6 inches the volume would be 73 cy. For a C-200 series tank to cover the bottom the tank, the grout at the center of the tank would be 9 inches (3.4 cy). For the second lift of 6 inches the volume would be 4.3 cy. For tank void space fill/stabilization lifts greater lift thickness could be used depending on grout plant capacity, heat of hydration, etc.			
15	Sections 6.3.2.2, 6.3.2.3, and 6.3.2.4 I thought ancillary equipment closure including tank specific pits and vaults was being defered to tank farm closure. I'd like to remove the discussion about pit filling and simply make the broad statement that ancillary equipment will be addressed on a tank farm scale and not during tank by tank closures including this closure demonstration. Filling of tank risers within pits may be okay to completely top off the tank. For this demonstration to make it simpler and easier I'm leaning toward including the risers as tank farm ancillary equipment and defer the filling decision to the overall farm ancillary equipment decision. Pending barrier subsidence decision criteria all of the risers may not each need to be accessed and individually filled.		No change. Stabilization of the pits is consistent with the interpretation of the requirements to provide isolation of potential liquid ingression pathways; filling the pits seals interconnected transfer pipes, conduits, and raw water lines that provide a potential pathway for liquids to enter the pit by intrusion or inadvertent waste routings.	
16	Appendix C Tank benchmark volume calculations are consistent with spreadsheet presented in Data Assessment Report.		Comment noted.	
17	Appendix D Not present.		Comment noted. The regulatory compliance crosswalk (Appendix D in the Draft) has been deleted from the final report.	
18	Appendix E No comments.		Comment noted.	
19	Appendix G Locate building C-73.		Comment incorporated.	

A-6400-090.1 (03/99)

REVIEW COMMENT RECORD (RCR)	1. Date 9/9/02	2. Review No.
	3. Project No. ATCD Project Basis of Design for Tank Closure	4. Page 5 of 5

12. Item	13. Comment(s)/Discrepancy(s) (Provide technical justification for the comment and detailed recommendation of the action required to correct/resolve the discrepancy/problem indicated.)	14. Reviewer Concurrence Required	15. Disposition (Provide justification if NOT accepted.)	16. Status
20	Overall general comment The scope of the report is for full tank closure i.e. waste stabilization, tank void space structural stabilization, and above tank pit and riser stabilization. I think if the scope was limited to retrievable waste stabilization it would better meet the current needs of the ATCD project.		No change. The scope of the report is consistent with the Level 2 specification and the statement of work.	

A-6400-090.1 (03/99)

REVIEW COMMENT RECORD (RCR)

1. Date	2. Review No.
3. Project No.	4. Page 1 of 3

5. Document Number(s)/Title(s)	6. Program/Project/Building Number	7. Reviewer	8. Organization/Group	9. Location/Phone
CEES-0014, ATCD Basis of Design Report	300 Area/ 328 Building	D.C. Comstock	Engineering/ Project Engineer	328/ Room 211 372-3348

17. Comment Submittal Approval:	10. Agreement with indicated comment disposition(s)	11. CLOSED
Organization Manager (Optional)	9/16/02 Date; CHG Reviewer/Point of Contract; Author/Originator	9/17/02 Date; CHG Reviewer/Point of Contact; Author/Originator

12. Item	13. Comment(s)/Discrepancy(s) (Provide technical justification for the comment and detailed recommendation of the action required to correct/resolve the discrepancy/problem indicated.)	14. Hold Point	15. Disposition (Provide justification if NOT accepted.)	16. Status
1	Comment: Section 2.1, 4th bullet (Page 2-1) last sentence the word present should be replaced with "prevent".		Comment incorporated.	
2	Comment: Section 2.1, 6th bullet (Page 2-1) Suggest removal of the last sentence to be consistent with section 4.2.1.3 Retrievability.		Comment incorporated.	
3	Comment: Section 2.1, 7th and 8th bullets (Page 2-1) suggest adding "as part of the ATCD project" to each bullet. These issues will be addressed as part of the tank farm closure.		Comment incorporated.	
4	Comment: Section 3.7.1, (Page 3-20), Unit consistence: Throughout the report residual waste volume is presented in gallons and the HFFACO requirement is presented in ft^3. Please provide existing residual waste volumes in both units for a direct comparison of volumes (example: 3000 gallons (401 ft^3)). Please address this throughout the report as existing volumes in each tank are presented.		Comment incorporated.	
5	Comment: Section 5.0, 1st paragraph (page 5-1), if bulk grout is not added immediately after the heel stabilization grout what additional steps are required to isolate the tank until gross tank filling? Please add discussion.		No change. Separation of the heel stabilization and bulk fill steps by a significant length of time will be addressed during detail design. It is envisioned that following heel stabilization the tank would require	

REVIEW COMMENT RECORD (RCR)	1. Date	2. Review No.
	3. Project No.	4. Page 2 of 3

			isolation and periodic monitoring until the time when the tank was completely filled with grout.	
6	Comment: Section 6.0, 1st paragraph (page 6-1), A transition sentence could be added at the beginning of the first paragraph. (Example: The preliminary objective of the ATCD Basis of Design report is to stabilize the residual tank waste and fill the tank. Grout placement has been chosen as the tank stabilization method.)		Comment incorporated	
7	Comment: Section 6.0, 1st paragraph, 1st sentence (page 6-1), add "grout" to describe the grout plant.		Comment incorporated	
8	Question: Section 6.1.2 Will there be any impact on existing operation if the grout plant is using 100 gallons/ min?		This interface will be matured to consider potential impacts on other tank farm operations during detail design	
9	Comment: Drawing CE-SK-102, View AA, In reviewing section 6.1.4 to help clearly identify the modifications required for filling the dome please consider the following changes to the drawing: Identify View AA as the Heel Pit – "View AA Heel Pit", in View AA add leaders to show the new equipment (New HVAC Duct, New Air Filter and the grout slickline).		Comment incorporated	
10	Comment: Drawing CE-SK-122, View AA, to help identify the new equipment for the 200-series tanks please add leaders to show the new equipment (New HVAC Duct, New Air Filter and the grout slickline).		Comment incorporated	
11	Comment: Section 6.1.5, 2nd paragraph (page 6-4), Text of report uses centerline depths of grout but the referenced drawing shows grout depths from the edge of the tank. Please be consistent – Suggest adding the centerline depth of grout on the right side of the tank cross-section.		Comment incorporated	
12	Question: Section 6.1.6, (page 6-4) Drawing CE-SK-102: Does C-106 have a cascade outflow line? I believe that the tanks are set up in series, C-104 cascades into C-105, C-105 cascades into C-106 and in some cases the last tank cascades into a crib. Have you checked the Isolation Drawings for C-106 to ensure that there are		No change. The cascade line will be isolated as discussed in Section 6.1.6. There is no outflow cascade line for C-106	

REVIEW COMMENT RECORD (RCR)	1. Date	2. Review No.
	3. Project No.	4. Page 3 of 3

	no outflow lines for this tank?			
13	Question: Section 6.2, 2nd paragraph, if both slicklines are running to C-106 do the slicklines both feed into 1 tremie? Or will there be two tremies (1 for each slickline)? Is there room for two tremies through the heel pit penetration?		Comment incorporated. Section 6.1 changed to clarify that both grout production lines feed into a single grout pump.	
14	Comment: Section 6.3.2.2 (page 6-8), the stabilization of each pit should mention the crowning of the grout surface to minimize infiltration.		Comment incorporated. Text added to Section 6.3.2.1 discusses crowned surface.	
15	Comment: Section 6.3.2.3 (page 6-9), the stabilization of each pit should mention the crowning of the grout surface to minimize infiltration.		Comment incorporated. Text added to Section 6.3.2.1 discusses crowned surface.	
16	Comment: Section 6.3.2.3 (page 6-9), Please consider clarifying all void spaces to all "accessible" void spaces. (Example: All void spaces accessible to free flowing grout shall be filled)		Comment incorporated.	
17	Comment: Section 6.4, 1st paragraph (page 6-11), the grout will not be flush with the pit structure over the entire surface area of the pit. The grout surface will be crowned to minimize the infiltration into the pit.		Comment incorporated.	

REVIEW COMMENT RECORD (RCR)

1. Date 9-11-02	2. Review No.
3. Project No. ATCD Project Basis of Design for Tank Closure	4. Page 1 of 2

5. Document Number(s)/Title(s)	6. Program/Project/Building Number	7. Reviewer	8. Organization/Group	9. Location/Phone
CES-0014 Draft ATCD Basis of Design	ATCD Project	Bill Grams		

17. Comment Submittal Approval:	10. Agreement with indicated comment disposition(s)	11. CLOSED
Organization Manager (Optional)	William H Grams Reviewer/Point of Contract 09/11/02 Date Author/Originator	William H Grams Reviewer/Point of Contact 09/16/02 Date Author/Originator

12. Item	13. Comment(s)/Discrepancy(s) (Provide technical justification for the comment and detailed recommendation of the action required to correct/resolve the discrepancy/problem indicated.)	14. Reviewer Concurrence Required	15. Disposition (Provide justification if NOT accepted.)	16. Status
1	Section 2.1, third bullet is a repeat of first.		Comment incorporated.	
2	Section 2.1, fourth bullet, add the area prefix 241 in the tank title designations (example: 241-C-106 in place of C-106). This prefix was just added to all tank callouts in the Alternatives Generation Analysis report so we should follow their lead for consistency.		Comment incorporated	
3	Section 4.1.2.1, has the determination of whether the waste heel is TRU or not been made? Will that impact the approach described in the basis of design.		A determination as to the classification of the waste has not yet been made. Since the waste is currently classified as HLW it is assumed that a Waste Incidental to Reprocessing determination will be made that allows DOE to manage the residuals as LLMW. The only option currently available for HLW is disposal in the national geologic repository. So this assumption is key to the ATCD project.	
4	Section 6.0, third paragraph second to last sentence. Description of pigging the slickline with a hard sponge and compressed air is a level of detail beyond the Basis of Design report. I suggest that for the Basis of Design report we state that the grout supplier will provide a method of safely emptying the slickline. The details of how the pigging/cleanout occurs can be included in the detailed design effort.		No change. Common commercial practice.	
5	Section 6.1.4, second paragraph notes work in and around the pits. Should state somewhere that shielding needs will be identified as part of the detailed design phase.		No change. Detail design will include ALARA considerations for implementation of design concept.	

A-6400-090.1 (11/99)

REVIEW COMMENT RECORD (RCR)

1. Date 9/9/02	2. Review No.
3. Project No. ATCD Project Basis of Design for Tank Closure	4. Page 2 of 2

12. Item	13. Comment(s)/Discrepancy(s) (Provide technical justification for the comment and detailed recommendation of the action required to correct/resolve the discrepancy/problem indicated.)	14. Reviewer Concurrence Required	15. Disposition (Provide justification if NOT accepted.)	16. Status
6	CE-SK-101, upper left hand corner of drawing a note calls out a "GROUT SILO", should this be changed to "CEMENT SILO" ?		Comment incorporated. Changed to "silo"	
7	CE-SK-102, in the center of the drwg, the air flow filter is called out. Is this an inlet filter or an outlet? During detailed design, the entire issue of needed ventilation should be evaluated. You may find that planned activities will only require a HEPA filter breather vent. For now though it is appropriate to show the active ventilation system for the tanks.		No change. This is an inlet filter as discussed in the text of the report.	
8	General comment, check to verify that the 6 meter max drop height is appropriate for the grout fill.		No change. Level 2 specification issue.	
9	CE-SK-107, Should this grout plug be used until a final decision is made on tank farm closure and how the yard piping will be addressed.		No change. The intent of the grout plug is not for tank farm considerations but to prevent inadvertent backflow of grout into 241-C-105. Yard piping (interpreted to mean the transfer lines and water lines within the tank farm) will be addressed as a part of tank farm closure.	
10	CE-SK-108, should add a note that states that no shielding is identified on the drawing for work in the pit but that shielding needs will be addressed during detailed design.		No change. See resolution of comment 5.	

A-6400-090.1 (03/99)

REVIEW COMMENT RECORD (RCR)

1. Date	2. Review No.
9/9/02	
3. Project No. C106, 201-204 Accelerated Tank Closure Basis of Design Report	4. Page 1 of 5

5. Document Number(s)/Title(s)	6. Program/Project/Building Number	7. Reviewer	8. Organization/Group	9. Location/Phone
C106, 201-204 Accelerated Tank Closure Basis of Design Report Dated 9/04/02		Gary Keimel	CHG Construction	SO-11; MO-413; 373-5898

17. Comment Submittal Approval:	10. Agreement with indicated comment disposition(s)	11. CLOSED
Organization Manager (Optional)	9/16/02 Date; Reviewer/Point of Contact; Author/Originator	9/16/02 Date; Reviewer/Point of Contact; Author/Originator

12. Item	13a. Comment(s)	13b. Basis	13c. Recommendations	14. Reviewer Concurrence Required	15. Disposition (Provide justification if NOT accepted.)	16. Status
1.	Section 2.1 Key Assumptions, 6th Bullet: This Key Assumption assumes the second phase of grouting immediately follows the first phase of heel stabilization, and eliminates the need for a retrievable grout formula. Based on existing criteria and current litigation pending, the likelihood of concurrent full tank stabilization appears to be minimal. This Basis of Design Report should address this inevitability, and include options for at least two distinct phases of grout stabilization. The first phase could be heel placement in C106 and heel placement and full stabilization in Tanks C201 thru 204. (Yardages from 250-300Cy to say 1500CY.)	Discussions during the Basis of Design Report Review Meeting on 9/4/02	Revise this Key Assumption and have the Project team and the Basis of Design Report address a time phased grouting schedule.		Acknowledge this comment is a valid concern and agree that the grout delivery, production, and placement system would likely be different for the waste heel stabilization phase if bulk fill of the tank were to be postponed up to 20 years. The last sentence in the bullet "*This enabling assumption eliminates the need for requiring the use of a retrievable grout formulation when stabilizing the residual waste*" has been deleted. A new sentence has been added noting that there is uncertainty in the schedule for completing the second phase and that for the purpose of cost estimating it is assumed that the second phase of grouting would take place immediately following the first phase. This is an issue that will	

A-6400-090.1 (03/99)

REVIEW COMMENT RECORD (RCR)

1. Date Error! Reference source not found.	2. Review No. Error! Reference source not found.
3. Project No. Error! Reference source not found.	4. Page 2 of 5

12. Item	13a. Comment(s)	13b. Basis	13c. Recommendations	14. Reviewer Concurrence Required	15. Disposition (Provide justification if NOT accepted.)	16. Status
	This would bring into question the need for an onsite portable grout and pumping system for this 1st phase. A modified mobile pump and slickline system with offsite batching may be the preferred method for this reduced volume phase. Tanks C-201 thru 204 could be filled utilizing a conventional Concrete Pump Truck (with articulating boom up to 180' long). Pump could be set up along fenceline northeast of the 200 series tanks for Tanks C-201 thru C-204, and along the Southeast fenceline for Tank C-106.				be further developed during detail design.	
2.	The pits at Tanks C201 thru 204 are currently covered with foam weather coating. Verify that coatings will be removed under final retrieval phase of work or include in workscope.				Comment incorporated. An assumption was added to section 2 stating that waste retrieval activities would include removal of the pit weather coating.	
3.	Section 6, Page 6-1 Project and Operational Description: Verify if Potable water is required for grout mix or if Raw Water is acceptable. Also, confirm with CHG Environmental ability to transfer pump cleanout and flush water for disposal. (Option: construct lined rinsate collection area, store rinse water and let evaporate)				No change. Discussions with the potential grout vendor indicate that river water (raw water) is commonly used – water analysis will need to be performed during detail design to verify. Wastewater interface will be matured during detail design to specify treatment limitations.	
4.	General Comment: A Plant Forces Work Review has not				Comment noted. This will be performed during early stages of	

A-6400-090.1 (03/99)

REVIEW COMMENT RECORD (RCR)

1. Date Error! Reference source not found.	2. Review No. Error! Reference source not found.
3. Project No. Error! Reference source not found.	4. Page 3 of 5

12. Item	13a. Comment(s)	13b. Basis	13c. Recommendations	14. Reviewer Concurrence Required	15. Disposition (Provide justification if NOT accepted.)	16. Status
	been performed yet, so the breakdown between Hanford Construction Forces and HAMTC Operations Forces has not been determined yet.				detail design.	
5.	Appendix A Cost and Schedule: Schedule - Construction Management and Acceptance Inspection activities to extend thru grouting activities for both C-106 and C200 Tanks. WBS 5.5.1.2.3.5.3.2 States that AI oversight of grout activities is not required. Re-verify and Revise in schedule and estimate accordingly.				Comment incorporated. The schedule for CM and AI activities has been extended to cover the duration of the tank grouting and surface restoration activities.	
6.	Schedule: Review and substantiate the procurement duration of 62 days for a new 500 CFM Exhauster with stack, monitoring,and I/C costing $2.2 mil. This normally would be a long lead procurement taking several months, (6 to 9 months for bid fabricate, factory test, and deliver).				Comment incorporated. Schedule revised to begin procurement on 6/1/03, immediately following completion of detail design.	
7.	Schedule durations assumed for Tank 201 thru 204 don't necessarily coincide with estimate manload durations. Example: 5.5.1.2.3.6.4.5 In Tank Equipment Stabilization – C-200 has 3 days per tank @ 2 shifts per day times 4 tanks = 12 WD's. Schedule has 5 Days. Review and revise accordingly.				Comment incorporated. Schedule durations were modified accordingly.	

A-6400-090.1 (03/99)

REVIEW COMMENT RECORD (RCR)

1. Date Error! Reference source not found.	2. Review No. Error! Reference source not found.
3. Project No. Error! Reference source not found.	4. Page 4 of 5

12. Item	13a. Comment(s)	13b. Basis	13c. Recommendations	14. Reviewer Concurrence Required	15. Disposition (Provide justification if NOT accepted.)	16. Status
8.	Specifications: Include a Section under Division 9 Finishes to address foam/weather covering over pits and risers after completion of grouting;				Comment incorporated	
9.	Sketches: CE-SK-101: Suggest revising Site plan to include full layout of C farm (all 12 tanks) and fenceline to depict gates, access points and other interferences; Include Scale on drwg. CE-SK-103: Identify Risers R1, R14 as benchmarks. CE-SK-107: Grout plug in Cascade Line : It appears that a temporary dam or some sort of grout stop is necessary to keep the flowable grout from proceeding down the 3" cascade line instead of filling the line in a 12" long grout plug. Is any verification of grout plug integrity required? Label the two 2" pipe sch 40 as the existing cleanout lines. CE-SK-110, 111, 123: Show and identify weathercovering over the grouted pits. Also grout design mix woul have ot be altered from a flowable mix to a stiff mix to achieve the				101: Partially incorporated. Showing the entire tank farm would reduce focus of drawing; Fig 3.1 provides general map. 103: Comment incorporated. 107: No change. Comment noted. A dam or two stage grouting process may be required and will be detailed during detail design. Comment incorporated. Existing cleanout lines will be labeled. 110, 111, 123: Comment incorporated 121: No change. Addressed in Section 6.1.6	

A-6400-090.1 (03/99)

REVIEW COMMENT RECORD (RCR)

1. Date Error! Reference source not found.	2. Review No. Error! Reference source not found.
3. Project No. Error! Reference source not found.	4. Page 5 of 5

12. Item	13a. Comment(s)	13b. Basis	13c. Recommendations	14. Reviewer Concurrence Required	15. Disposition (Provide justification if NOT accepted.)	16. Status
	domed contour as depicted. CE-SK-121: Verify that 2 inlet lines to each 200 series tanks (N-3, N-4), do not need any specific isolation prior to grouting the tanks.					
10.	Section 5.0 Project Boundaries and Interfaces: Second sentaence last phrase is missing text: " and all ??? at tank pits." 2nd Bullet: Interim barriers at C Tank Farm (surface barriers) are currently being performed by an offsite contractor and will be complete and not interfere with C-106 Closure.				Comment incorporated. Changed at tank to at-tank to distinguish from between-tank pits. No change to the interim surface barrier discussion as this is identified as a potential interface.	
11.	Section 6.1.4 Modifications of Existing Pits: Both the C106 Heel Pit and the 200 series jet pump pit modifications include a penetration for the grout slickline as well as ventilation/breather ports.				Comment incorporated. Section 6.1.4 text changed to identify cover plate modification for slickline access.	

A-6400-090.1 (03/99)

REVIEW COMMENT RECORD (RCR)

1. Date 9-9-02	2. Review No.
3. Project No. 241-C-106 ATCD	4. Page 1 of 12

5. Document Number(s)/Title(s)	6. Program/Project/Building Number	7. Reviewer	8. Organization/Group	9. Location/Phone
CES-0014 Draft ATCD Basis of Design	241-C-106 Waste Retrieval Project	Steve O'Toole	Project & Procurement Engineering	2704HV/376-4284

17. Comment Submittal Approval:	10. Agreement with indicated comment disposition(s)	11. CLOSED
Organization Manager (Optional)	Reviewer/Point of Contact 9-17-02 Date Author/Originator	Reviewer/Point of Contact 9-17-02 Date Author/Originator

12. Item	13. Comment(s)/Discrepancy(s) (Provide technical justification for the comment and detailed recommendation of the action required to correct/resolve the discrepancy/problem indicated.)	14. Reviewer Concurrence Required	15. Disposition (Provide justification if NOT accepted.)	16. Status
1	Section 2.2 Heel jet pump will be removed by retrieval. However, retrieval does plan to use the riser and to leave the AMS at the end of retrieval. Majority of residual waste is assumed to be on the bottom of the tank. There will be measurable waste/contamination on the walls. The assumption regarding physical properties has risk associated with it, which leads to rather conservative conclusions. Closure needs to consider chemical and radiological properties. I do not see activities for characterization for these (see comment 10)		Comment incorporated on first two points. As far as characterization the closure design will utilize information collected through the planned ATCD characterization effort as well as video surveillance data collected during waste retrieval. The project schedule is constrained such that characterization following retrieval and prior to closure is not possible. Sampling will be done prior to retrieval and a difference established based on material removed.	
2	Section 3.1.5 The existing electrical transformer is inadequate (see RPP-7155). 241-C-104 project plans to replace it with a 1000kVA transformer (this will not be in time for retrieval of 241-C-106). Therefore it is included in upgrades planned for 241-C-106 Retrieval to support the MRS. A smaller transformer may suffice for modified past practice sluicing.		Comment incorporated. Section 6.1.2 text changed to indicate that power to the exhausters will be temporarily provided via above grade cables from the power distribution system of either project W-320 or from the potential upgrades for the planned C-106 waste retrieval task.	
3	Section 5.0 1st Paragraph 2nd sentence Typo. I believe the intent is to include the tank pits in the scope.		Agree that the tank pits are included in the scope. Punctuation revised.	

A-6400-090.1 (11/99)

REVIEW COMMENT RECORD (RCR)

1. Date Error! Reference source not found.	2. Review No. Error! Reference source not found.
3. Project No. 241-C-106 ATCD	4. Page 2 of 12

12. Item	13. Comment(s)/Discrepancy(s) (Provide technical justification for the comment and detailed recommendation of the action required to correct/resolve the discrepancy/problem indicated.)	14. Reviewer Concurrence Required	15. Disposition (Provide justification if NOT accepted.)	16. Status
4	Section 5.0 2nd Paragraph 5th sentence The 241-C-106 Waste Retrieval project did not plan to remove the AMS from the central riser (R-13) at the end of retrieval.		Comment incorporated.	
5	Section 5.0 3rd Paragraph first bullet The 241-C-104 Waste Retrieval Project's baseline schedule is final design in FY 03, and construction in FY 2004 into FY 2006. I do not recognize dates listed.		Comment incorporated.	
6	Section 5.0 3rd Paragraph Is there an interface with 241-C-103 interim stabilization? They will be operating in C-Farm next Fiscal Year.		Comment incorporated.	
7	Section 6.1.1 1st Sentence See comment ~~2~~ 1		Comment incorporated. The report assumes that the retrieval project will leave some equipment in riser R-13.	
8	Section 6.1.1 2nd paragraph Editorial. I suggest splitting into two paragraphs. One for C-106 and the other for the 200 series tanks.		Comment incorporated.	
9	Section 6.3.2 and Table 6.1 Note that the 241-C-106 Waste Retrieval Project was planning to use the MRS. Riser R-9 would provide the In-tank Vehicle Access, R-13 the Articulating mast System, R-3 a camera or Tank Volume Measurement System. I do not know the configuration for a modified sluicing system.		No change. Comment noted and will be addressed during detail design as project interfaces and integration matures.	
10	Figure A.2 Add an activity for characterization (chemical/radiological) to prepare designs etc. Add activity to develop/test grout formulation(s) to verify design Need to add activity to remove equipment from C-106 R-13 left by retrieval.		a) waste characterization is not planned following waste retrieval. b) Grout formulation testing is beyond the scope of this BOD and will by done by the ATCD project. The interface will be noted as either an assumption or directly on the schedule. c) Activity to remove equipment was added to the schedule.	

A-6400-090.1 (03/99)

REVIEW COMMENT RECORD (RCR)

1. Date 9/09/2002	2. Review No. RPP-QA-JJV-02-9/09
3. Project No. N/A	4. Page 1 of 1

5. Document Number(s)/Title(s)	6. Program/Project/Building Number	7. Reviewer	8. Organization/Group	9. Location/Phone
CEES-0014, "ACCELERATED TANK CLOSURE DEMONSTRATION BASIS OF DESIGN REPORT"	N/A	J VERDERBER	SST QUALITY ASSURANCE	200W-MO281 373-3644

17. Comment Submittal Approval:	10. Agreement with indicated comment disposition(s)	11. CLOSED
Organization Manager (Optional)	9/17/02 Date; Reviewer/Point of Contract; Author/Originator	9/17/02 Date; Reviewer/Point of Contact; Author/Originator

12. Item	13. Comment(s)/Discrepancy(s) (Provide technical justification for the comment and detailed recommendation of the action required to correct/resolve the discrepancy/problem indicated.)	14. Reviewer Concurrence Required	15. Disposition (Provide justification if NOT accepted.)	16. Status
1.	(EDITORIAL) Page 2-1 – In section 2-1, the third bullet is a duplicate of the first bullet.		Comment incorporated.	closed
2.	(EDITORIAL) Page 2-3 – In the third to last bullet, verify effect – vs – affect.		Comment not incorporated. Effect is correct usage.	
3.	Page 3-6 – At the end of the first paragraph in 3.2.1 it mentions that the requirements of milestone M-45-00 were not met. Will not meeting that milestone have any impact on tank closure?	JJV	Comment incorporated. Text clarified.	
4.	Page 3-11 – Reference somewhere that the piping sections that have an "M-Code" suffix (i.e. M42, M8, etc…) are identified on the H-2-31750 drawing series. Also, add this drawing reference to section 9.	JJV	Comment incorporated.	
5.	Tables 3.3, 3.5 and 3.6 show ENRAF gauges for C-201, 203 and 204. As of this date, the ENRAF's have not been installed and are not scheduled until sometime in FY-03. ENRAF for C-202 was recently completed.	JJV	No change. Stabilization is to occur in FY04; at that time the Enrafs will have been installed according to existing ECNs.	
6.	Page 6-2, section 6.1.3, states that no new instrumentation will be required. Will there be a need for a relay to shut down the grout transfer pump in the event of a filter failure or any other abnormality?	JJV	No change. Shutdown of the equipment will be as discussed in Section 6.1.3	
7.	Appendix B – Where is it stated that the sections as identified are from DOE Order 6430.1A?	JJV	No change. Although 6430.1a was used as an outline in preparation of appendix B, it is not an active DOE order and therefore is not cited as a reference.	
8.	(EDITORIAL) Drawing CE-SK-121, At riser 10, typo on word "pump."	JJV	Comment incorporated.	

A-6400-090.1 (11/99)

REVIEW COMMENT RECORD (RCR)

1. Date 9-9-02	2. Review No.
3. Project No. ATCD Project Basis of Design for Tank Closure	4. Page 1 of 4

5. Document Number(s)/Title(s)	6. Program/Project/Building Number	7. Reviewer	8. Organization/Group	9. Location/Phone
CES-0014 Draft ATCD Basis of Design	ATCD Project	G. Wells		

17. Comment Submittal Approval:	10. Agreement with indicated comment disposition(s)	11. CLOSED
Organization Manager (Optional)	Reviewer/Point of Contract 9/16/02 Date Author/Originator	Reviewer/Point of Contact 9/16/02 Date Author/Originator

12. Item	13. Comment(s)/Discrepancy(s) (Provide technical justification for the comment and detailed recommendation of the action required to correct/resolve the discrepancy/problem indicated.)	14. Reviewer Concurrence Required	15. Disposition (Provide justification if NOT accepted.)	16. Status
1	Front Cover Referring to the graphic - looks like a glacier off of Mt. McKinley just a thought-maybe a tank of some sort as Hanford C-Farm		Comment incorporated. The graphic will be removed for document release.	
2	Section 1.2, Page 1-1, First Paragraph, Last Sentence, added words noted by "* Change to read: ...administrative aspects of retrieval and "interim or operational" closure and provide.....future tank "and tank farm" closure decisions.		Comment incorporated.	
3	Section 1.3, Page 1-2, First Paragraph, Second Sentence, added words noted by "": ...waste heel and filling the tanks and "in tank" ancillary...		Comment incorporated.	
4	Section 1.3, Page 1-2, First Paragraph, Next to Last Sentence: List the tanks at the end of the sentence.		Comment incorporated.	
5	Section 1.3, Page 1-2, Second Paragraph, Last Sentence, ...readily available materials, equipment...: I am not sure this is a true statement. If the MRS crawler is used, this is new thinking and equipment to remove solids.		No change. The readily available materials, equipment, and technology applies to the tank fill/closure strategy as defined in Section 6 of the BOD report and not the waste retrieval activities.	
6	Section 1.4, Page 1-3, First Paragraph, Third Bullet: Replace "chemicals" with "waste"		Comment incorporate.	
7	Section 2.0, Page 2-1, First Paragraph, Second Bullet: add "and DOE" between regulatory and approvals. Remove "such as reclassification of the residual waste heel".		Comment incorporated.	
8	Section 2.0, Page 2-1, First Paragraph, Third Bullet: Remove - duplicate bullet.		Comment incorporated.	

A-6400-090.1 (11/99)

REVIEW COMMENT RECORD (RCR)

1. Date 9/9/02	2. Review No.
3. Project No. ATCD Project Basis of Design for Tank Closure	4. Page 2 of 4

12. Item	13. Comment(s)/Discrepancy(s) (Provide technical justification for the comment and detailed recommendation of the action required to correct/resolve the discrepancy/problem indicated.)	14. Reviewer Concurrence Required	15. Disposition (Provide justification if NOT accepted.)	16. Status
9	Section 2.0, Page 2-1, First Paragraph, Third Bullet: Add the following as the new third bullet: "Residual tanks waste is waste incidental to reprocessing (WIR) and will be manages as LLW".		Comment incorporated.	
10	Section 2.0, Page 2-1, First Paragraph, Sixth Bullet: Add the following for new sixth bullet: "Residual tank waste will be LDR compliant".		Comment incorporated.	
11	Section 2.2, Page 2-2, First Paragraph, New Tenth Bullet: Add the following for the new tenth bullet: "Samples of residual waste will be taken prior to grout fill."		Comment incorporated.	
12	Section 2.2, Page 2-2, First Paragraph, New 14th Bullet: Add the following for the new 14th bullet: "The level of NEPA required for the ATCD will be an Environmental Assessment with issuance of a FONSI."		No change. This assumption is not necessary for the BOD Report. This is captured by the assumption that all DOE and regulatory approvals will be obtained prior to initiating tank closure actions.	
13	Section 3.1.1, Page 3-1, First Paragraph, End of Paragraph: Add: "These tanks have not received any waste since ----."		No change. Information is in Sections 3.2.1 and 3.3.1	
14	Section 3.2.5, Page 3-11, Fourth Paragraph, Second Set of Bullets: Currently, C-106 is being passively vented through existing HEPAs. There are plans to isolate the P-16 exhauster and convert to a passive breather filter with HEPAs and not the existing HEPAs.		Comment incorporated in Section 3.2.7	
15	Section 3.2.7, Page 3-12, First Paragraph, First Sentence, added words noted by "" : ...is still installed and "is not a viable option for exhauster purposes because of compliance issues for rad air emissions". Delete the rest of the sentence.		Comment incorporated	
16	Section 3.2.7, Page 3-12, Third Paragraph: If this relates to 296-P-16, it should be deleted.		Comment incorporated	
17	Section 3.2.7, Page 3-13, Last Paragraph: If 296-C-6 is not used a portable exhauster would be used - see 4.2.2.4.		No change. This section is only to describe the existing equipment, not the conceptual use.	
18	Section 4.1, Page 4-1, First Paragraph, First Sentence: Remove "regulatory" the second word.		Comment incorporated.	
19	Section 4.1.1, Page 4-1, End of First Paragraph: Add the following to the end of the paragraph or end of section. Also suggest using the reg. Strategy RCRA language on how these requirements are being met. "Closure of the 5 ATCD SSTs will be done in accordance with an Ecology approved RCRA Closure Plan. Development of this closure plan is currently being discussed with Ecology.		Comment incorporated. Text added to Section 4.0 to clarify.	

A-6400-090.1 (03/99)

REVIEW COMMENT RECORD (RCR)

1. Date 9/9/02	2. Review No.
3. Project No. ATCD Project Basis of Design for Tank Closure	4. Page 3 of 4

12. Item	13. Comment(s)/Discrepancy(s) (Provide technical justification for the comment and detailed recommendation of the action required to correct/resolve the discrepancy/problem indicated.)	14. Reviewer Concurrence Required	15. Disposition (Provide justification if NOT accepted.)	16. Status
20	Section 4.1.2.1, Page 4-2, First Paragraph, Last Sentence: Determine that any residual tank waste is incidental to reprocessing will utilize the evaluation process in accordance with DOE M435.1-1.		Comment incorporated.	
21	Section 4.1.2.1, Page 4-3, First Paragraph (b): Make a note that this option is not used. Residual waste will be managed as LLW.		Comment incorporated.	
22	Section 4.1.2.2, Page 4-3, First Paragraph, Last Sentence, reword as follows: ...the "residual" low-level waste "in the 5 ATCD tanks" shall meet the following requirements (DOE M 435.1-1 IV (P).		Comment incorporated.	
23	Section 4.1.3, Page 4-4, First Paragraph, New Next to the Last Sentence: "Subpart D, Technical Requirements for Land Disposal Facilities also would apply." [Note: This is where the Class C limits are defined.]		Comment incorporated.	
24	Section 4.1.5, Page 4-5, First Paragraph, First Sentence: Replace "Until a record of decision is issued..." with "Until a Finding of No Significant Impact (FONSI) is issued...."		Comment incorporated.	
25	Section 5.0, Page 5-1, First Paragraph, First Sentence: A question mark on: ...include those SSCs that...		Comment incorporated.	
26	Section 6.0, Page 6-1, First Paragraph, 5th Sentence: ....portable generators..., size? If over 500hp (I think) permits would be required.		No change. Comment noted for detail design.	
27	Section 6.0, Page 6-1, End of First Paragraph: Add to the end of the paragraph: "Appropriate permits would be obtained."		Comment incorporated in Section 4	
28	Section 6.1.3, Page 6-3, 4th Paragraph: Notices of Construction are planned for permitting of the portable exhauster. (Is this the same exhauster as discussed in Sec, 6.1.5?)		Comment incorporated in Section 4. Yes, this is the same portable exhauster as in Section 6.1.5	
29	Section 6.1.5, Page 6-3, First Paragraph: Delete "portable" in "portable exhauster".		No change. SAR-067 identifies it as a portable exhauster.	
30	Section 7.0, Page 7-1, Second Set of Bullets: Permitting of the portable batch plant most likely will be required.		No change. Air permitting requirements were added to Section 4.	
31	Appendix D, Page D-I: This may not be the best place for something like this. The reg. strategy may change as discussions continue with the regulators. I'm trying to understand what value this appendix would add to the Basis of Design report. In the text, we have		Comment incorporated. Appendix deleted.	

A-6400-090.1 (03/99)

REVIEW COMMENT RECORD (RCR)	1. Date 9/9/02	2. Review No.
	3. Project No. ATCD Project Basis of Design for Tank Closure	4. Page 4 of 4

12. Item	13. Comment(s)/Discrepancy(s) (Provide technical justification for the comment and detailed recommendation of the action required to correct/resolve the discrepancy/problem indicated.)	14. Reviewer Concurrence Required	15. Disposition (Provide justification if NOT accepted.)	16. Status
	already stated we would meet performance objectives, etc.			

A-5400-090.1 (03/99)

REVIEW COMMENT RECORD (RCR)

1. Date 9-9-02	2. Review No.
3. Project No. ATCD Project Basis of Design for Tank Closure	4. Page 1 of 6

5. Document Number(s)/Title(s)	6. Program/Project/Building Number	7. Reviewer	8. Organization/Group	9. Location/Phone
CES-0014 Draft ATCD Basis of Design	ATCD Project	J. Winters		

17. Comment Submittal Approval:	10. Agreement with indicated comment disposition(s)	11. CLOSED
Organization Manager (Optional)	9/17/02 Date; Reviewer/Point of Contract; Author/Originator	9/17/02 Date; Reviewer/Point of Contact; Author/Originator

12. Item	13. Comment(s)/Discrepancy(s) (Provide technical justification for the comment and detailed recommendation of the action required to correct/resolve the discrepancy/problem indicated.)	14. Reviewer Concurrence Required	15. Disposition (Provide justification if NOT accepted.)	16. Status
1	Section 1.4, second bullet Section 2.0 Change "enable" to "allow".		Comment incorporated.	
2	Section 2.1, page 2-1 Delete 3rd bullet		Comment incorporated.	
3	Section 2.1, page 2-1, 4th bullet, last sentence Change "present" with "minimize potential for".		Comment incorporated.	
4	Section 2.1, page 2-1, 6th bullet Add "For the sake of cost estimating," at the beginning of the third sentence and delete last sentence.		Comment incorporated.	
5	Section 2.1, page 2-1, add 7th bullet to read: The grout used in waste stabilization phase will be low strength to facilitate retrieval, if necessary prior to the tank fill phase.		Comment incorporated.	
6	Section 2.2, page 2-3, 16th bullet Change last sentence to read – "Different grout formulations may be employed for each purpose".		Comment incorporated.	
7	Figure 3.2, page 3-3 See figure for suggested changes		Comment incorporated. Appropriate changes made to figure	
8	Figure 3.3, page 3-4 See figure for suggested changes		Comment incorporated. Appropriate changes made to figure	

A-6400-090.1 (11/99)

REVIEW COMMENT RECORD (RCR)

1. Date 9/9/02	2. Review No.
3. Project No. ATCD Project Basis of Design for Tank Closure	4. Page 2 of 6

12. Item	13. Comment(s)/Discrepancy(s) (Provide technical justification for the comment and detailed recommendation of the action required to correct/resolve the discrepancy/problem indicated.)	14. Reviewer Concurrence Required	15. Disposition (Provide justification if NOT accepted.)	16. Status
9	Section 3.1.5, page 3-5, last paragraph Add 241-C-73 reference to CE-SK-101		Comment incorporated.	
10	Section 3.2.1, page 3-6, second paragraph, first sentence "at a vacuum less than 50 inches of water" doesn't make sense		Comment incorporated. Text clarified	
11	Section 3.2.1, page 3-6, second paragraph, fourth sentence Last part of sentence doesn't make sense – "and a 3/8 inch steel plate liner".		Comment incorporated. Text clarified	
12	Figure 3.4, page 3-7 See figure for comments		Comment incorporated.	
13	Section 3.2.2, page 3-8, second set of bullets, first bullet Why are dual units only shown in one case? What is CHG standard?		Comment incorporated. Dual units removed	
14	Section 3.2.2, page 3-8, first sentence prior to third set of bullets Change "from" to between and "to" to "and".		Comment incorporated.	
15	Section 3.2.3, page 3-9 first paragraph last sentence Replace "360 ft^3" with "(waste residues not to exceed 360 ft^3 or limit of technology, whichever is less)".		Comment incorporated.	
16	Table 3.1, page 3-10 What is grade elevation? Would it be helpful in all 5 riser tables to provide an indication of which risers are exposed above grade and which are located inside a box or vault?		Comment incorporated. Grade elevation added as footnote. Risers in pits is identified in the table.	
17	Figure 3.5, page 3-14 Would it make sense to identify 296-P-16 and 296-C-006 in this figure?		Comment incorporated. Figure title changed for clarity	
18	Section 3.4.1 last sentence Replace "of 30 ft^3" with "(waste residues not to exceed 30 ft^3 for 200 series tank or limit of waste retrieval technology whichever is less)".		Comment incorporated.	
19	Section 3.5.1 second sentence Why wasn't the statement "is judged to be more accurate" made for TK C-201, C-203, and C-204?		Comment incorporated.	
20	Section 3.5.1 last sentence Delete "of 30 ft^3".		Comment incorporated.	
21	Section 3.6.1, page 3-19, last sentence Delete "of 30 ft^3".		Comment incorporated.	

A-6400-090.1 (03/99)

REVIEW COMMENT RECORD (RCR)

1. Date 9/9/02	2. Review No.
3. Project No. ATCD Project Basis of Design for Tank Closure	4. Page 3 of 6

12. Item	13. Comment(s)/Discrepancy(s) (Provide technical justification for the comment and detailed recommendation of the action required to correct/resolve the discrepancy/problem indicated.)	14. Reviewer Concurrence Required	15. Disposition (Provide justification if NOT accepted.)	16. Status
22	Section 3.7.1, page 3-20, last sentence Delete "of 30 ft^3".		Comment incorporated.	
23	Section 3.6.3, page 3-22, last paragraph last sentence Change "or" to "and".		Comment incorporated.	
24	Section 3.8, page 3-22 Rename to 3.7.5.		Comment incorporated.	
25	Section 4.1.2, page 4-2 Correct O in heading		Comment incorporated.	
26	Section 4.2, page 4-5 Add Section 4.2.2.5 to spec out ventilator needs		No change. Tank ventilation requirements are captured in Section 4.2.2.4 "Tank Air Filtration System"	
27	Section 6.0, page 6-1 second paragraph, second sentence Change "clamped" to "connected" and insert "with grooved-end couplings" after "together".		Comment incorporated.	
28	Section 6.0, page 6-1, third paragraph Consider simplifying this description since much of this information is reported in 6.1.7.		Comment incorporated.	
29	Section 6.0, page 6-1, third paragraph, sixth sentence Is "wastewater" different than the flush water?		Comment incorporated. Text clarified	
30	Section 6.0,page 6-1, fourth paragraph Replace all text after the second sentence with - "The Alternatives Generation and Analysis (AGA) report down-selected the use of a layer of low-strength grout for waste stabilization in the tanks. The AGA assumed that the waste remaining after waste retrieval efforts are complete will be strongly adhered to the tank's steel liner and in the case of C-106, some liquid waste will remain. The AGA noted that "chemical getters will likely be added based on further development and waste characterization results. The liquid waste fraction (in tank C-106) will be encapsulated within the grout. Incorporation of the liquid waste is significant as it is expected to contain the highest concentration of the mobile constituents." Further, the AGA states that residual solid waste, adhered to the steel liner of the tank, will be blanketed with the initial grout layer. Although the solid waste will not be fully encapsulated, the overlying grout is expected to minimize contact with infiltration water and maintain a high pH environment conducive to minimizing contaminant solubility."		Comment incorporated.	

A-6400-090.1 (03/99)

REVIEW COMMENT RECORD (RCR)

1. Date 9/9/02	2. Review No.
3. Project No. ATCD Project Basis of Design for Tank Closure	4. Page 4 of 6

12. Item	13. Comment(s)/Discrepancy(s) (Provide technical justification for the comment and detailed recommendation of the action required to correct/resolve the discrepancy/problem indicated.)	14. Reviewer Concurrence Required	15. Disposition (Provide justification if NOT accepted.)	16. Status
31	Section 6.0, page 6-1 following fourth paragraph If the first part of this section is meant to summarize the operation, should the structural fill grouting be included here?		Comment incorporated.	
32	Section 6.1.3, page 6-2, first paragraph How will we track how much grout is added to each tank during each phase of the work?		No change. Addressed in Section 6.2.2	
33	Section 6.1.4, page 6-3, second paragraph re: "simple tool" and "expanding grout" If the tool works well, do you really need expanding grout?		Comment incorporated.	
34	Section 6.1.4, page 6-3 third paragraph Change "top closure" to roof slab		Comment incorporated.	
35	Section 6.1.6, page 6-4, second paragraph insert "(possibly using a multiple step process)" after "expanding grout"		Comment incorporated.	
36	Section 6.1.6, page 6-4, second paragraph insert "(approx.)" after "nearest"		Comment incorporated. Approximately added to 1-foot-long	
37	Section 6.1.7, page 6-5, fourth paragraph Is "wastewater" different from "flush water"?		Comment incorporated. Text clarified	
38	Section 6.2.1, page 6-6, first paragraph insert "which is not fixed to the tank floor will be" after waste		Comment incorporated.	
39	Section 6.2.1, page 6-6, first paragraph insert a comma and delete "or" after "displaced"		Comment incorporated.	
40	Section 6.2.1, page 6-6, first paragraph insert a comma and "and/or mixed with" after "above"		Comment incorporated.	
41	Section 6.2.2, page 6-6, first paragraph insert "How is this volume monitored?" after first sentence		Comment incorporated.	
42	Section 6.2.2, page 6-6, first paragraph insert "earlier" after "described"		Comment incorporated. Text clarified	
43	Section 6.2.2, page 6-6, second paragraph re: "existing temperature probes" can these probes sense surface temperature of the grout or air temperature only?		No change. Thermocouples are spaced along the probe length and will not specifically indicate surface temperature of the grout but will provide a bulk temperature indication of the grout	

A-6400-090.1 (03/99)

REVIEW COMMENT RECORD (RCR)

1. Date 9/9/02	2. Review No.
3. Project No. ATCD Project Basis of Design for Tank Closure	4. Page 5 of 6

12. Item	13. Comment(s)/Discrepancy(s) (Provide technical justification for the comment and detailed recommendation of the action required to correct/resolve the discrepancy/problem indicated.)	14. Reviewer Concurrence Required	15. Disposition (Provide justification if NOT accepted.)	16. Status
44	Section 6.3, page 6-7, first paragraph, first sentence delete "stabilization of the" (*comment: suggest that we not call it tank stabilization to eliminate confusion with Phase I grouting.*)		Comment incorporated.	
45	Section 6.3, page 6-7, first paragraph, first sentence insert "fill" after "tank"		Comment incorporated.	
46	Section 6.3.1, page 6-7 insert at end of paragraph "Grout lift height limitation and cure time between lifts will be determined during final design."		Comment incorporated.	
47	Section 6.3.2.2, page 6-8, fourth paragraph "(see CE-CK-109)." *I don't have a copy of 109; check numbering.*		No change. Sheet was missing from all packages and will be included in the final	
48	Section 6.3.2.4, page 6-9, second paragraph, first sentence insert "As an example," before "Riser R-9"		Comment incorporated.	
49	Section 6.3.3, page 6-10, first paragraph delete "described in Section 6.0"		Comment incorporated.	
50	Section 6.3.4, page 6-11 *I recognize all this as being a repeat of previous sections. Can the information be condensed or restructured?*		Comment incorporated.	
51	Section 6.3.5, page 6-11, end of second paragraph insert "The need for additional benchmarks on each tank will be evaluated during detailed design."		Comment incorporated.	
52	Section 6.3.5, page 6-11, third paragraph **Should we add that if tank fill does not immediately follow waste stabilization grouting, monitoring for in-tank moisture may be desired?*		No change. Assumption for this report is immediate tank fill	
53	Section 6.4, page 6-11, first paragraph delete "stabilization" insert "closure"		Comment incorporated.	
54	Section 6.4, page 6-11, second paragraph insert "that are" after "risers"		Comment incorporated.	
55	Section 6.4, page 6-12, end of paragraph insert "This demolition will be planned when the tank farm closure is in detailed design phase."		Comment incorporated.	
56	CBIS sheets. Miscellaneous spelling and editorial comments shown on hard copy of sheets provided to CEES.		Comments incorporated.	

A-6400-090.1 (03/99)

REVIEW COMMENT RECORD (RCR)

1. Date 9/9/02	2. Review No.
3. Project No. ATCD Project Basis of Design for Tank Closure	4. Page 6 of 6

12. Item	13. Comment(s)/Discrepancy(s) (Provide technical justification for the comment and detailed recommendation of the action required to correct/resolve the discrepancy/problem indicated.)	14. Reviewer Concurrence Required	15. Disposition (Provide justification if NOT accepted.)	16. Status
57	Appendix A, Sheet 4 of 6 25FEB04 02MAR04 Fill Tank (C-106) *Can the on-site batch plant support this schedule for bulk fill?*		Comment incorporated. Additional time added to the bulk fill activity. The batch plant can support the bulk tank fill duration depending on the lift height and set time requirements between lifts. This will be refined during detail design following selection of the grout formulation.	
58	Appendix A, Table A.1 Tank Fill Basis for Design Cost Estimate Summary 5.5.1.2.3.6.2.2 "Contrace" *spelling??*		Comment incorporated.	

A-6400-090.1 (03/99)

REVIEW COMMENT RECORD (RCR)

1. Date 9-9-02	2. Review No.
3. Project No. ATCD Project Basis of Design for Tank Closure	4. Page 1 of 12

5. Document Number(s)/Title(s)	6. Program/Project/Building Number	7. Reviewer	8. Organization/Group	9. Location/Phone
CES-0014 Draft ATCD Basis of Design – APPENDIX A COST AND SCHEDULE DETAIL	ATCD Project	J. Winters		

17. Comment Submittal Approval:	10. Agreement with indicated comment disposition(s)	11. CLOSED
Organization Manager (Optional)	9/17/02 Date; Reviewer/Point of Contract; Author/Originator	9/17/02 Date; Reviewer/Point of Contact; Author/Originator

12. Item	13. Comment(s)/Discrepancy(s) (Provide technical justification for the comment and detailed recommendation of the action required to correct/resolve the discrepancy/problem indicated.)	14. Reviewer Concurrence Required	15. Disposition (Provide justification if NOT accepted.)	16. Status
1	CEIS, 5.5.1.2.3.5.3.3, Estimating Assumptions & Exclusions change "wather" to "weather"		Comment incorporated	
2	CEIS, 5.5.1.2.3.5.4.5, Estimating Assumptions & Exclusions change "relativvely to relatively		Comment incorporated	
3	CEIS, 5.5.1.2.3.5.4.6, Scope Description change "pumpted" to pumped		Comment incorporated	
4	CEIS, 5.5.1.2.3.5.4.6, Estimating notes: *duration of 1 week seems too short. Is it reasonable?*		Comment incorporated. Additional time added to the schedule.	
5	CEIS, 5.5.1.2.3.6.2.5, Scope Description change "WBS 5.5.1.2.3.5.2.6" to "WBS 5.5.1.2.3.5.2.4"		Comment incorporated	
6	CEIS, 5.5.1.2.3.6.2.5, Estimating notes change "o fthe" to "of the"		Comment incorporated	
7	CEIS, 5.5.1.2.3.6.3.4, Scope Description change "poratble" to "portable"		Comment incorporated	
8	CEIS, 5.5.1.2.3.6.3.4, 6.0 Resource Requirements, BQ Rate change "1001.00" to "1000.00"		Comment incorporated	
9	CEIS, 5.5.1.2.3.6.3.5, Estimating notes *schedule shows 01Apr 04* change "7/01/04" to "04/01/04"		Comment incorporated	

A-6400-090.1 (11/99)

REVIEW COMMENT RECORD (RCR)

1. Date 9/9/02	2. Review No.
3. Project No. ATCD Project Basis of Design for Tank Closure	4. Page 2 of 2

12. Item	13. Comment(s)/Discrepancy(s) (Provide technical justification for the comment and detailed recommendation of the action required to correct/resolve the discrepancy/problem indicated.)	14. Reviewer Concurrence Required	15. Disposition (Provide justification if NOT accepted.)	16. Status
10	CEIS, 5.5.1.2.3.6.4.1, Scope Description "is covered under WBS 5.5.1.2.3.6.4.1 and is not duplicated here." This statement lost me. Did you mean C106 ops mgmt is not duplicated here? 5.5.1.2.3.5.4.1?		Comment incorporated	
11	CEIS, 5.5.1.2.3.6.4.2, Scope Description change "asusmed" to "assumed"		Comment incorporated	
12	CEIS, 5.5.1.2.3.6.4.2, Estimating Assumptions & Exclusions change "WBS 5.5.1.2.3.5.4.1" to WBS 5.5.1.2.3.6.4.1" ?		Comment incorporated	
13	CEIS, 5.5.1.2.3.6.4.2, 6.0 Resource Requirements, Factors 95%, 95%, 95%, 0%, 95% In other CEISs this factor was listed as 195% instead of 95%. Why the change here? See 5.5.1.2.3.6.4.4		Comment incorporated	
14	CEIS, 5.5.1.2.3.6.4.4, Scope Description change "sereies" to "series"		Comment incorporated	
15	CEIS, 5.5.1.2.3.6.4.5, Contingency change "evalaution" to "evaluation"		Comment incorporated	
16	CEIS, 5.5.1.2.3.6.4.5, Estimating notes change "faciliatate" to facilitate"		Comment incorporated	
17	CEIS, 5.5.1.2.3.6.4.6, Scope Description change "seriec" to "series"		Comment incorporated	
18	CEIS, 5.5.1.2.3.6.4.6, Scope Description change "pumpted" to "pumped"		Comment incorporated	
19	CEIS, 5.5.1.2.3.6.4.6, Estimating notes "2 operators x 2 shifts x 1 day/tank" *does this mean you are placing the bulk fill in 16 hrs? If so, seems optimistic. Realistic? We should plan to confirm grout lift structural _____ during detailed design.*		Comment incorporated	
20	CEIS, 5.5.1.2.3.6.4.8, Basis of Estimate and Resource Requirements 195% versus 95%		Comment incorporated	
21	COST ESTIMATING INPUT SUPPORTING INFORMATION *Hanford Site ATCD Project – Draft Layout – Please provide darker copy in final report*		Comment incorporated	

A-6400-090.1 (03/99)

REVIEW COMMENT RECORD (RCR)

1. Date 9-9-02	2. Review No.
3. Project No. ATCD Project Basis of Design for Tank Closure	4. Page 1 of 2

5. Document Number(s)/Title(s)	6. Program/Project/Building Number	7. Reviewer	8. Organization/Group	9. Location/Phone
CES-0014 Draft ATCD Basis of Design – APPENDIX B through G	ATCD Project	J. Winters		

17. Comment Submittal Approval:	10. Agreement with indicated comment disposition(s)	11. CLOSED
Organization Manager (Optional)	Reviewer/Point of Contract 9/19/02 Date Author/Originator	Reviewer/Point of Contact 9/19/02 Date Author/Originator

12. Item	13. Comment(s)/Discrepancy(s) (Provide technical justification for the comment and detailed recommendation of the action required to correct/resolve the discrepancy/problem indicated.)	14. Reviewer Concurrence Required	15. Disposition (Provide justification if NOT accepted.)	16. Status
1	**Appendix B – Applicable Specifications**, First page, first table, under Division 2, after 0280-1, insert "Surface Restoration –for grout batch plant site, etc"		Comment incorporated.	
2	First page, middle paragraph, insert "(below)" after Table CS-2-1		Comment incorporated.	
3	Second page, insert table headings		Comment incorporated.	
4	Third page, Section 0280-1, after item #2, insert "Surface Restoration"		Comment incorporated.	
5	**Appendix C – Calculations**, page C-1, fourth paragraph, insert "This issue will be evaluated further during final design."		Comment incorporated.	
6	Page C-2, LONG-TERM STRUCTURAL ISSUES, *How should we address these issues. Other than the void issue (#4), aren't these all "no harm fouls?" Aren't we assuming that the tanks have no structural integrity after the tank farm barrier is installed? For #4, how does long-term creep work? Does it require voids for the material to creep to? Should we discuss?*		Text revised to clarify "long-term" and a note added that these would be subject to further evaluation if/as required during detail design.	
7	**Appendix E – Level 2 Specification Compliance Matrix**, page E-2, 3.1.2.1 Compliance Discussion, delete "float the waste (using the advantage of the higher density grout) to"		Comment incorporated.	
8	**Appendix F – Grout Delivery/Placement Evaluation Criteria and Concept Selection Process**, page F-2, Table F-1, Stabilization structural properties, Preliminary Engineering Requirement/Interpretation, *Can we state that this verification will happen during detailed design?*		Comment incorporated.	

A-6400-090.1 (11/99)

REVIEW COMMENT RECORD (RCR)

1. Date 9/9/02	2. Review No.
3. Project No. ATCD Project Basis of Design for Tank Closure	4. Page 2 of 2

12. Item	13. Comment(s)/Discrepancy(s) (Provide technical justification for the comment and detailed recommendation of the action required to correct/resolve the discrepancy/problem indicated.)	14. Reviewer Concurrence Required	15. Disposition (Provide justification if NOT accepted.)	16. Status
9	Page F-4, second bullet, insert as last sentence "Grout mix formulation will also evaluate use of chemical getters in the waste stabilization grout."		Comment incorporated.	
10	Page F-6, F4.2.1.1, sixth sentence, delete space between "waste water"		Comment incorporated.	
11	Page F-14, F4.2.3.2, second sentence, insert "not fixed to the tank floor" after "waste," delete "or floated"		Comment incorporated.	
12	Page F-15, Technical Risk, end of first sentence, insert "and the amount of waste which is fixed to the floor"		Comment incorporated.	
13	Page F-15, F4.2.3.3, second sentence, insert "which is not fixed to the tank floor" between "waste" and "would"		Comment incorporated.	
14	Page F-A-1, Attendees, after John Winters, change "CHG" to "CH2M HILL"		Comment incorporated.	
15	**Appendix G Sketches** Miscellaneous edits, spelling, labeling changes to ATCD Drawings per hard copy mark-up attached.		Comments incorporated.	

A-6400-090.1 (03/99)