PNL--8388-Vol.1

DE93 004913

Clean Option: An Alternative Strategy for Hanford Tank Waste Remediation

Volume 1. Overview

J. L. Straalsund
J. L. Swanson
E. G. Baker
J. J. Holmes[a]
E. O. Jones
W. L. Kuhn

December 1992

Prepared for
the U.S. Department of Energy
under Contract DE-AC06-76RLO 1830

Pacific Northwest Laboratory
Richland, Washington 99352

(a) Westinghouse Hanford Company.

MASTER

Executive Summary

Plans for remediation of the Hanford underground storage tanks are currently undergoing reevaluation. As part of this process, many options are being considered for the Tank Waste Remediation System (TWRS). The "clean option" described here proposes an aggressive waste processing strategy to achieve the three major objectives:

- greatly reduce the volume of high-level waste (HLW) to lessen demands on geologic repository space
- decrease by several orders of magnitude the amount of radioactivity and toxicity now in the waste tanks that will be left permanently onsite as low-level solid waste (LLW)
- accomplish the first two objectives without significantly increasing the total amount of waste for disposal.

The study discussed here focuses on process chemistry, as it provides the foundation for achieving the clean option objectives. Because demonstrated separation steps have been identified and connected in a way that meets these objectives, the study concludes that the process chemistry rests on a firm technical basis.

Several specific goals are identified as the basis for the overall strategy. An integrated process flowsheet is included in this report to illustrate how these specific goals can be achieved. This flowsheet uses chemical processes that have been demonstrated on a plant or laboratory scale. The flowsheet is developed in sufficient detail to estimate the volume and composition of both the HLW and the LLW. This flowsheet may not represent the final process recommended for achieving the clean option goals, but it is an example of how the goals can be met. An overview of this information is included in this report, and further details will be provided in a second volume.

Estimates based on the specific flowsheet indicate that more than 99% of the radioactivity can be removed from the Hanford tank waste and immobilized in less than 1000 canisters of borosilicate glass for disposal in a geologic repository. Compared with a reference case currently being used in TWRS planning, both the volume of glass and the radioactivity left onsite in LLW are reduced more than a factor of 10. Long-term risk is reduced by a larger amount by removal of technetium and nitrate, which account for much of the long-term risk but little of the radioactivity. At the same time, this aggressive processing option achieves a significant reduction in LLW volume through the extensive use of chemical recycling.

Three technical issues are identified as critical to the successful implementation of the clean option: adequate sludge dissolution, efficient solid/liquid separation, and achievement of laboratory-scale decontamination factors in full-scale operation and in a plant operating environment. It is anticipated that these issues will be the same regardless of the actual processing scheme selected.

Acknowledgments

The authors would like to acknowledge other staff members at the Hanford Site who have contributed to the development of the clean option: George Jansen Jr., Westinghouse Hanford Company; Richard G. Cowan, Westinghouse Hanford Company; and N. G. (Penny) Colton, Pacific Northwest Laboratory.

Furthermore, a group of national technical experts have also contributed and are acknowledged here. We are very grateful to the members of this group for the time and effort they dedicated to this task. We are particularly indebted to David O. Campbell for his thorough review of the draft of this report.

Contributing experts:

Steven A. Barker	Westinghouse Hanford Company
Jimmy T. Bell	Oak Ridge National Laboratory
David O. Campbell	Consultant
Harry J. Dewey	Los Alamos National Laboratory
E. Philip Horwitz	Argonne National Laboratory
Gregg J. Lumetta	Pacific Northwest Laboratory
Wallace W. Schulz	Consultant
George F. Vandegrift	Argonne National Laboratory
Steven L. Yarbo	Los Alamos National Laboratory

Contents

Executive Summary iii

Acknowledgments v

1.0 Introduction 1.1

2.0 Description of the Clean Option 2.1

2.1 Specific Clean Option Goals 2.1

2.2 Assumptions and Rationale for Selection of Goals 2.2

3.0 Disposition of Tank Waste Constituents in the Clean Option 3.1

3.1 Description of Hanford Tank Waste 3.2

3.2 Decontamination Factors Required to Meet Clean Option LLW Specifications 3.2

3.3 Separation of Bulk Components Required to Meet the 1000-Canister Criteria 3.5

4.0 Example of a Clean Option Flowsheet 4.1

5.0 Technical Issues 5.1

6.0 Conclusions and Recommendations 6.1

7.0 References 7.1

Figures

1.1 Hanford TWRS Reference Case 1.2

4.1 Block Flow Diagram for the Clean Option Example Flowsheet 4.2

4.2 Flowsheet for the Example Clean Option Process 4.3

Tables

3.1 Disposition of Tank Waste Constituents 3.1

3.2 Bulk Components of Total SST Waste 3.3

3.3 Class A Radionuclide Limits in LLW Wastes: Concentrations and Required Decontamination Factors 3.4

3.4 Allowable Additions to Glass in Waste Feed 3.5

3.5 Effect of Important Constituents on Canister Count 3.6

4.1 Number of HLW Canisters Produced by Clean Option Flowsheet 4.4

4.2 Concentration of Radionuclides in the LLW in the Clean Option Example Flowsheet 4.6

5.1 Clean Option Technical Issues 5.2

1.0 Introduction

Disposal of high-level tank wastes at Hanford is currently envisioned to divide the waste between two principal waste forms: glass for the high-level waste (HLW) and grout for the low-level waste (LLW). The draft flow diagram shown in Figure 1.1 was developed as part of the current planning process for the Tank Waste Remediation System (TWRS), which is evaluating options for tank cleanup. The TWRS has been established by the U.S. Department of Energy (DOE) to safely manage the Hanford tank wastes. It includes tank safety and waste disposal issues, as well as the waste pre-treatment issues that are involved in the "clean option" discussed in this report.

The "reference case" illustrated in Figure 1.1 is similar to the system described by Grygiel et al. (1991), and will be used in this report as a basis for comparison with the "clean option" presented here. In the reference case, chemical separations have been proposed for the tank wastes that are sufficient to prevent the grout from becoming a transuranic (TRU) waste form according to U.S. Nuclear Regulatory Commission (NRC) Class C LLW limits (10 CFR 61). However, in this case, tens of megacuries of other radioactive isotopes would become part of the grout. In addition to total radioactivity, technetium and the high nitrate content contribute to the long-term risks associated with the grout disposal. For the glass forms, nonradioactive waste constituents, combined with chemicals added as part of some separations schemes, would lead to HLW glass volumes of over 10,000 canisters. These canisters would cost several billion dollars to produce. When combined with canisters expected from other sites, the total volume would seriously impact the space presently planned for DOE defense wastes at the Nevada repository.

This report describes the results of a study led by Pacific Northwest Laboratory[a] to determine if a more aggressive separations scheme could be devised which could mitigate concerns over the quantity of the HLW and the toxicity of the LLW produced by the reference system. This more aggressive scheme, which would meet NRC Class A restrictions (10 CFR 61), would fit within the overall concept depicted in Figure 1.1; it would perform additional and/or modified operations in the areas identified as interim storage, pretreatment, and LLW concentration. Additional benefits of this scheme might result from using HLW and LLW disposal forms other than glass and grout, but such departures from the reference case are not included at this time.

The evaluation of this aggressive separations scheme addressed institutional issues such as:

- radioactivity remaining in the Hanford Site LLW grout
- volume of HLW glass that must be shipped offsite

(a) Pacific Northwest Laboratory is operated for the U.S. Department of Energy by Battelle Memorial Institute under Contract DE-AC06-76RLO 1830.

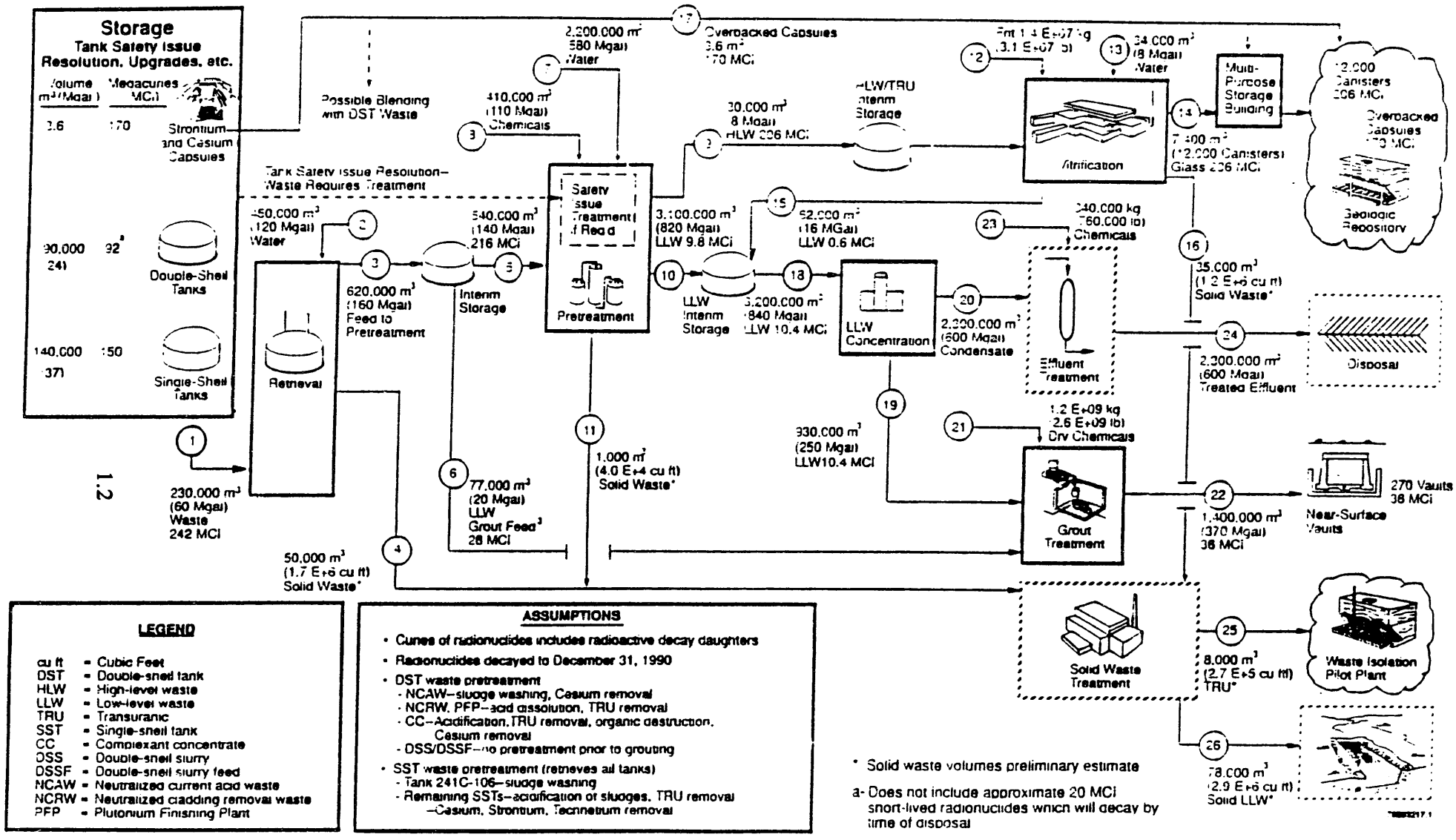

Figure 1.1. Hanford TWRS Reference Case

- disposition of appropriate waste constituents to nonwaste forms
- generation and disposition of secondary wastes
- emissions.

Specific goals for an aggressive separations scheme were developed based on these issues. These goals comprise the "clean option." Once the specific goals were defined, a chemical process flowsheet for a separations scheme was developed as an example of how the clean option could be achieved. The flowsheet was used as a basis to assess waste volumes, to consider the feasibility of the process chemistry, and to identify technical issues that must be resolved to achieve the clean option goals. Although the specific example flowsheet was used to guide the identification of technical issues, alternative flowsheet and technology approaches were considered sufficiently to determine that the issues would be the same for a range of approaches.

This report (Volume 1): 1) describes the basis of the clean option and how the goals were derived, 2) presents a flowsheet and a mass balance for a chemical processing scheme to meet the goals, and 3) identifies the technical issues to be resolved. The flowsheet and mass balance assessment is presented in abbreviated form in this report. More detailed information will be provided in a companion report (Volume 2).

2.0 Description of the Clean Option

The Tank Waste Remediation System planned for Hanford encompasses several options, including the "clean option." The broad objectives of the clean option compared with the other options being considered are listed below:

- minimize the residual radioactivity and chemical toxicity of the bulk of the waste, most often referred to as LLW, to further reduce the long-term environmental effects on the Pacific Northwest region
- decrease the volume of the HLW to reduce long-term demands on the geologic repository space
- accomplish the first two goals without increasing the amount of waste requiring disposal.

The specific goals developed to achieve these objectives are given in the following section.

2.1 Specific Clean Option Goals

The following goals have been adopted as the basis for formulating an aggressive but feasible strategy for separating the components of the waste to meet the clean option objectives:

- The radioactivity in the waste will be removed from the bulk of the waste such that the radionuclides in the remaining LLW will not exceed NRC Class A maximum allowable concentrations for shallow land burial of radioactive materials.
- The maximum allowable concentrations for technetium and iodine are further reduced below the Class A limits to as low as reasonably achievable (ALARA).
- Additional radioactivity will be removed from the LLW where significant reductions can be achieved through minor modifications to the process scheme.
- Uranium will be separated at sufficient purity to be sent to a stockpile and will not become part of the HLW or LLW form.
- The LLW will be disposed of in a manner that complies with U.S. Environmental Protection Agency (EPA) and state regulations for disposal of hazardous wastes.
- The radionuclides that have been removed from the bulk of the waste will be disposed of within about 1000 canisters of a borosilicate glass that meets current Hanford Waste Vitrification Plant (HWVP) glass specifications.
- Waste minimization principles will be used to minimize the volume of LLW.

2.2 Assumptions and Rationale for Selection of Goals

One of the principal objectives of the clean option is to reduce the radioactivity and toxicity in the bulk of the waste to a level that would be publicly acceptable and would reduce the long-term environmental effects on the Pacific Northwest region. Drinking water standards were initially considered as the limit for the concentration of radionuclides in the LLW stream; however, it was not feasible to achieve the separation factors required to meet these standards. Instead, the NRC Class A specifications were selected as the next most stringent standards that are legally established. In general, these standard represent a high level of risk reduction. However, for the Hanford tank wastes, several assessments (Droppo et al. 1991, Buck et al. 1991) have indicated that, if not retained within the disposal system, Tc-99, I-129, and U-238 are primary contributors to long-term radioactivity-related risk even at concentrations allowed by the Class A limit. Thus, the goals include an additional reduction for these constituents.

Grout is an acceptable waste form for heavy metals and is assumed to be the waste form used for the LLW in the specific clean option example outlined later in the report. To reduce the chemical toxicity from other components, the clean option will include destruction of nitrates, nitrites, and organics prior to grouting. Actual limits on nitrates, nitrites, and organics in the grout are not defined.

Another main objective is to reduce the volume of HLW that would require disposal in a geologic repository. The target volume for the HLW, 1000 canisters of glass, appears reasonable based on the following information:

- 1000 canisters is a quantity large enough to accommodate the heat generation from the radionuclides in the Hanford tank wastes.

- 1000 canisters would yield a significant reduction in demands on repository space; the space requirements would be reduced from more than half to less than 10% of that currently allocated for defense wastes at the repository.

Borosilicate glass is assumed to be the HLW form. Work has been under way for a number of years in the HWVP project to determine the concentrations of various constituents that can be accommodated by existing borosilicate vitrification technology. Hanford tank waste includes abundant nonradioactive species such as iron, zirconium, and aluminum that would substantially increase the volume of the glass beyond 1000 canisters if not diverted to the LLW stream. Also, less abundant nonradioactive species exist that are sufficiently insoluble in molten glass that their concentrations need to be limited in the feed to the HWVP.

The third principal objective of the clean option is to achieve the first two goals without substantially increasing the amount of waste for disposal. This objective appears achievable through the aggressive use of waste minimization and recovery and recycle of key chemicals used to process the waste, such as nitric acid and sodium hydroxide.

3.0 Disposition of Tank Waste Constituents in the Clean Option

In devising an aggressive separations scheme to meet the clean option goals, the problem must be addressed in terms of the specifications on the concentration of constituents than can appear in both the glass and grout waste forms. Separations steps involving radionuclides, abundant nonradioactive chemical species, and minor chemical species that are toxic or are insoluble in glass must all be considered. In addition, the destruction of some components such as nitrates, nitrites, and organics is required to reduce the toxicity of grout. Table 3.1 shows the disposition of tank waste constituents in the clean option. There are alternative disposition options that may prove advantageous for certain

Table 3.1. Disposition of Tank Waste Constituents

Waste Constituents	Disposition	Reason
Nitrate, nitrite, organics	Destroy by calcination	Reduce grout toxicity, recover caustic for processing
Cs, Sr, TRU, Th	Glass	Meet NRC Class A goal for grout
Al, Ba, Fe, Na, silicates, aluminosilicates, Zr	Grout	The masses of these constituents would result in large volumes of glass
Ni, light lanthanides, noble metals	Grout	Low solubilities in glass, resulting in small concentrations allowed in feed to a vitrification plant
Heavy lanthanides	Glass	Decrease radionuclide content of grout
U	To a stockpile as uranium oxide in appropriate containers	Useful if purified; disposal in glass would result in large volumes; possible release performance problems if put into grout; ALARA reduction of radioactivity level in grout
Toxic metals	Grout	Best demonstrated available technology for disposal (assuming no recycle to industrial use)
Tc	Glass	Unacceptable solubility and mobility of Tc in groundwater in contact with grout
I	TBD[a] waste form in canister(s) to be sent to HLW repository	Unacceptable solubility and mobility of I in groundwater in contact with grout; volatility of iodine compounds precludes inclusion in glass

(a) To be determined.

species, but they are not a basis of the clean option. Single-shell tank (SST) waste was used as a basis for this study, although double-shell tank (DST) waste was also considered. Based on an average composition for SST waste, separation factors or decontamination factors (DF) that will be required to meet the clean option goals were determined.

3.1 Description of Hanford Tank Waste

The total quantities of bulk chemical components and important radionuclides present in the SST wastes, as assumed for this study, are given in Table 3.2. These values were developed in other studies at Hanford and are accepted in this study as a basis for flowsheet development and waste quantity comparisons, with the realization that results of future waste characterization work may give a somewhat different picture. The quantities of bulk components present in the DST wastes are generally smaller than those present in the SST wastes; exceptions are aluminum, fluoride, and zirconium, where comparable quantities are present in the two types of waste. Thus, the data of Table 3.2 provide a good approximation of the total quantities of bulk components present in Hanford tank waste.

3.2 Decontamination Factors Required to Meet Clean Option LLW Specifications

The radionuclides that need to be separated from the SST waste and the degree of separation required can be determined by comparing the Class A radionuclide limits with the radionuclide concentrations that would exist if untreated waste were immobilized in the LLW form. Results of such comparisons for the total SST wastes and for neutralized current acid waste (NCAW) (the most highly radioactive of the DST wastes) are shown in Table 3.3. For this specific clean option example the volume of grout was assumed to be governed by the sodium content at a concentration of 5M. This is based on the upper limit of currently demonstrated grout formulations.

The DFs shown in Table 3.3 were calculated assuming concurrent processing of sludge and supernate, with the volume of LLW being defined by the total sodium content of the two fractions. Other processing approaches would lead to different decontamination requirements; for example, if sludge and supernate are processed separately and if the sludge contains 10% of the sodium, then ten-fold higher DFs would be required for those radionuclides (e.g., Sr, Pu, Am) that are present in the sludge.

The data of Table 3.3 show that only Sr-90, Cs-137, Pu-239, and Am-241 need to be removed from the SST waste (considering an average of all tanks) for the LLW to meet Class A limits and that only these four radionuclides plus Tc-99 need to be removed from NCAW. However, several instances exist where removal of other components might be required because of variabilities in compositions among the tanks (e.g., Ni-63 in SST and I-129 in NCAW). The clean option goals include removal of Tc-99 and I-129 on an ALARA basis because of their high mobility in the environment. Removal of Ni-63 was not included in the example flowsheet; it will need to be added to ensure that the LLW form does not exceed the Class A limit during processing of some of the SST waste.

Table 3.2. Bulk Components of Total SST Waste

Components	Amount Present [a]			
	Mole	Gram	Isotope	Ci
Al	9.05×10^{7}	2.44×10^{9}		
Am		$\sim 10^{4}$	Am-241	3.6×10^{4}
Ba	4×10^{6} [b]			
Bi	1.25×10^{6}	2.61×10^{8}		
Ca	3.25×10^{6}	1.30×10^{8}		
Cr	2.21×10^{6}	1.15×10^{8}		
Cs		5.6×10^{5} [b]	Cs-137	9.5×10^{6}
Fe	1.12×10^{7}	6.27×10^{8}		
Hg	4.49×10^{3}	9.00×10^{5}		
K	9×10^{6} [b]			
Lanthanides	6×10^{5} [b,c]		Sm-151	$\sim 6 \times 10^{5}$ [b]
Mn	2.18×10^{6}	1.20×10^{8}		
Na	2.25×10^{9}	5.17×10^{10}		
Ni	3.04×10^{6}	1.78×10^{8}	Ni-63	$\sim 3 \times 10^{5}$ [b]
Np		4.7×10^{4} [b]		
Pu		5.8×10^{5} [b]	Pu-239, 240	2.7×10^{4}
Si	7.93×10^{6}	2.22×10^{8}		
Sr	4.11×10^{5}	3.60×10^{7}	Sr-90	4.5×10^{7}
Tc		$\sim 5 \times 10^{5}$	Tc-99	$\sim 9 \times 10^{3}$
Th		1.3×10^{7} [b]	Th-232	1.4 [b]
U		1.4×10^{9} [b]	U-238	4.7×10^{2} [b]
Zr	2.70×10^{6}	2.46×10^{8}		
Cl	1.13×10^{6}	4.00×10^{7}		
CO_3	2.68×10^{7}	1.61×10^{9}		
F	4.24×10^{7}	8.05×10^{8}		
$Fe(CN)_6$	1.52×10^{6}	3.22×10^{8}		
H_20	2.49×10^{9}	4.48×10^{10}		
I		5.6×10^{5} [b]	I-129	2.4×10^{1}
NO_3	1.56×10^{9}	9.67×10^{10}		
NO_2	1.04×10^{8}	4.80×10^{9}		
OH	5.38×10^{8}	9.15×10^{9}		
PO_4	9.20×10^{7}	8.74×10^{9}		

(a) From values in HDW-EIS (DOE 1987) unless indicated otherwise.
(b) Separate estimate.
(c) Midpoint between 1.7×10^{6} in HDW-EIS and 2.0×10^{5} in separate estimate.

Table 3.3. Class A Radionuclide Limits in LLW Wastes: Concentrations and Required Decontamination Factors

Radionuclides	Concentration, Ci/m³			Required Decontamination Factor (DF)[b,c]	
	Class A Limit	In SST Waste at 5M Na[a]	In NCAW at 5M Na	SST	NCAW
H-3	40		6.8 x 10-1		1.7×10^{-2}
C-14	0.8	3.1×10^{-4}	1.8×10^{-2}	3.9×10^{-4}	2.3×10^{-2}
Co-60	700	1.6×10^{-1}		2.2×10^{-4}	
Ni-63	3.5	6.2×10^{-1}		1.8×10^{-1}	
Sr-90	0.04	1.0×10^{2}	4.0×10^{3}	2.5×10^{3}	1.0×10^{5}
Tc-99	0.3	2.0×10^{-2}	4.5×10^{-1}	6.7×10^{-2}	1.5
I-129	0.008	5.3×10^{-5}	1.2×10^{-3}	6.6×10^{-3}	1.4×10^{-1}
Cs-137	1.0	2.1×10^{1}	4.7×10^{3}	2.1×10^{1}	4.7×10^{3}
Np-237		6.8×10^{-5}		4.0×10^{-3}	
Pu-239	0.017[d]	6.0×10^{-2}	3.2×10^{-1}	3.5×10^{0}	1.9×10^{1}
Am-241		8.0×10^{-2}	3.6×10^{-1}	4.7×10^{0}	2.1×10^{1}

(a) Based on overall average waste composition.
(b) Required DF = (Concentration in waste at 5M Na) ÷ (Concentration allowed in Class A).
(c) DF of 1 or less indicates no separation is required.
(d) For a waste form density of 1.7 g/mL.

The quantity of nickel present in SST waste is too high to include within 1000 glass canisters (discussed in next section). Furthermore, Ni-63 is present in some SST tanks (or groups of tanks) in quantities that would exceed the Class A limit in grout made from those tanks (or groups of tanks). Consequently, a different disposition method must be chosen for the separated nickel. Decay storage in a surface facility or repository disposal in an alternative waste form are possibilities for handling this special problem.

The process steps used to separate the indicated radionuclides from the waste must be capable of providing higher DF values than those given in Table 3.3 in light of the sum-of-fractions-rule portion of the Class A regulations and feed variability possibilities, especially in the SSTs. Target DFs tenfold greater than these listed in Table 3.3 may be required to ensure that clean option goals are met for SST waste.

Target DFs in excess of $\sim 10^4$ will be difficult to achieve in practice in one cycle of any process, which suggests that, based on the required DFs listed in Table 3.3, the process flowsheet should include sequential cycles for removal of strontium, and possibly cesium. Such sequential cycling is definitely indicated for NCAW and may likely be needed for strontium removal from some SSTs.

3.3 Separation of Bulk Components Required to Meet the 1000-Canister Criteria

Table 3.4 shows estimates of allowable mass percentages of key waste constituents in glass. These values were obtained from the HWVP project to serve as a basis for developing the example clean option process flowsheet. Ongoing studies in the HWVP project are conducted to determine

Table 3.4. Allowable Additions to Glass in Waste Feed

Waste Constituents	Maximum weight percent[a]	Basis
TRU	1.0	HWVP feed specification: best estimate, obtained from HWVP
U	6.8	HWVP feed specification
Th	7.0	Assumed to be analogous to U and Zr
Ni	1.6	HWVP feed specification
Cs	23	Molar equivalent to Na, K; heat loading more restrictive
Sr	4.8	Midpoint of molar equivalence to Ba and Ca
Ba	4.5	HWVP feed specification
Tc	0.22	Assume the allowed percentage for Pd
Zr	7.4	HWVP feed specification
Lanthanides	1.7	HWVP feed specification
Al	3.4	HWVP feed specification
Fe	12	HWVP feed specification
Cr	0.34	HWVP feed specification
Na	3.8	HWVP feed specification

(a) Gram of constituent per 100 g of glass.

the concentrations of various constituents that can be accommodated by existing borosilicate vitrification technology. These estimates are constantly being revised. Because of these limitations, certain key constituents of the waste can have a significant effect on the number of canisters of glass that will be produced. Table 3.5 shows the number of canisters that would be required to incorporate all of a particular constituent in the glass and still meet the HWVP specifications.

An estimate of the separation factors required to meet the clean option goal of 1000 canisters can be obtained by dividing the canister total in Table 3.5 by 1000. For example, a separation factor of about 10 will be required for nickel and uranium. Only about 10% of the nickel can be retained in the HLW and still meet the HWVP specifications and 1000-canister limit. The most difficult elements to adequately separate will be those that require a high degree of sludge dissolution (Fe, Cr, Ni) and those that behave similarly to elements that must be included in the HLW.

Table 3.5. Effect of Important Constituents on Canister Count

Waste Constituents	Number of Canisters (SST & DST)
Ni	7×10^3
Sr	5×10^2
Ba	7×10^3
Zr	5×10^3
Tc	5×10^2
Cs	3×10^1
Lanthanides	5×10^3
TRU	5×10^1
U	1×10^4
Th	1×10^2
Al	5×10^4
Cr	8×10^4
Fe	4×10^3
Na	1×10^6

4.0 Example of a Clean Option Flowsheet

The major features of a candidate radionuclide removal process that will meet the objectives of the clean option are depicted in Figure 4.1. This simplified block flow diagram shows the major features of the process; the three most important areas to the present discussion are 1) sludge dissolution, 2) acid-side separations, and 3) basic-side separations.

A more detailed flowsheet for this example process is shown in Figure 4.2. This flowsheet was constructed as an example that has a good technical basis and that allows meaningful consideration of the effect of pretreatment activities on the amount of wastes requiring disposal and on the radionuclide content of the LLW form. Technologies of differing maturities have been included in this flowsheet, but all of the major steps have been demonstrated on at least a small scale with radioactive wastes. It was developed in regard to SST waste, but should also be suitable for DST waste. All steps might not be necessary with some wastes, but more than one cycle of some steps might be required with some wastes. The flowsheet is not to be considered finalized. The general features of the flowsheet are described here; more details will be presented in Volume 2.

One of the key features of the flowsheet is the recycling of chemicals, especially sodium hydroxide. Therefore, implementation of this flowsheet should only increase the quantity of materials to be disposed of by less than 1% (Volume 2).

Before the solid and liquid components are separated, the waste slurry can be treated to destroy organic complexants. Organic complexants can have adverse effects on some of the separations processes. The separated solids are then washed to dissolve soluble salts and to remove most interstitial liquid before they are subjected to multiple dissolution steps. The first dissolution step is a caustic leach step aimed at dissolving selected solids (e.g., aluminum hydroxide, silica, silicates) and converting some insoluble phosphates to hydroxides. Then more complete solids dissolution can be accomplished in subsequent acid dissolution steps.

Two acid dissolution steps are included because of the anticipated difficulty in effecting complete dissolution. If these steps are not sufficient to completely dissolve the solids (or decontaminate them to Class A limits), they will be processed further.

The solution from acid dissolution of the caustic-leached sludge is processed through a series of separations steps to remove radionuclides and thus separate them from the bulk components of the sludge (e.g., iron, zirconium, chromium, nickel, and possibly aluminum). These steps include 1) a TBP solvent extraction step that removes uranium, plutonium, neptunium, and thorium; 2) a CMPO solvent extraction step that removes americium and lanthanides; 3) a crown ether solvent extraction step that removes strontium, barium, and technetium; and 4) an ammonium phosphomolybdate ion exchange step that removes cesium.

Ion exchange steps are used to further fractionate the products of the CMPO and crown ether steps to minimize the quantities of nonradioactive elements that accompany the radioactive elements. These fractionating ion exchange steps employ organic complexants (e.g., DTPA, EDTA) that may

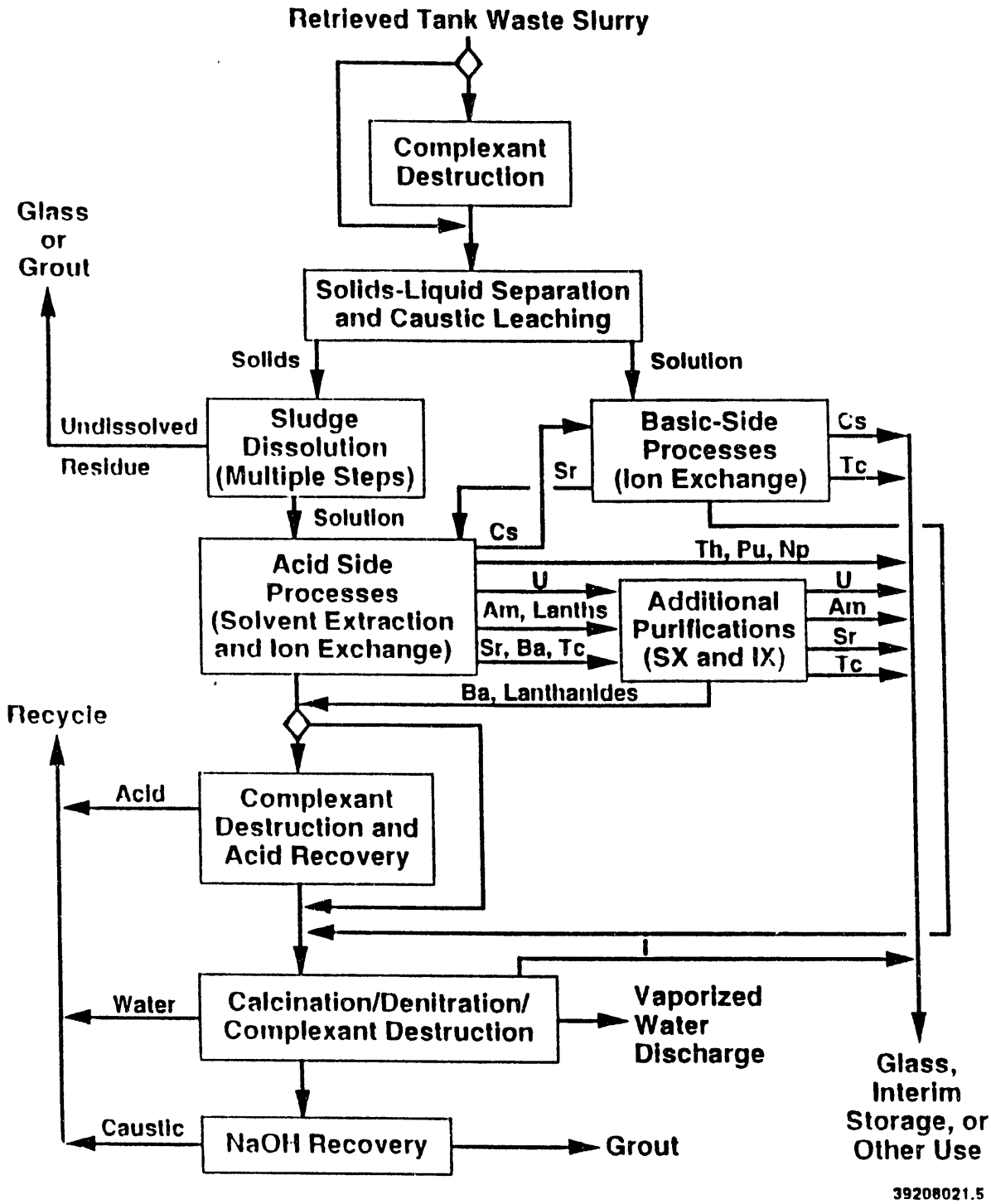

Figure 4.1. Block Flow Diagram for the Clean Option Example Flowsheet

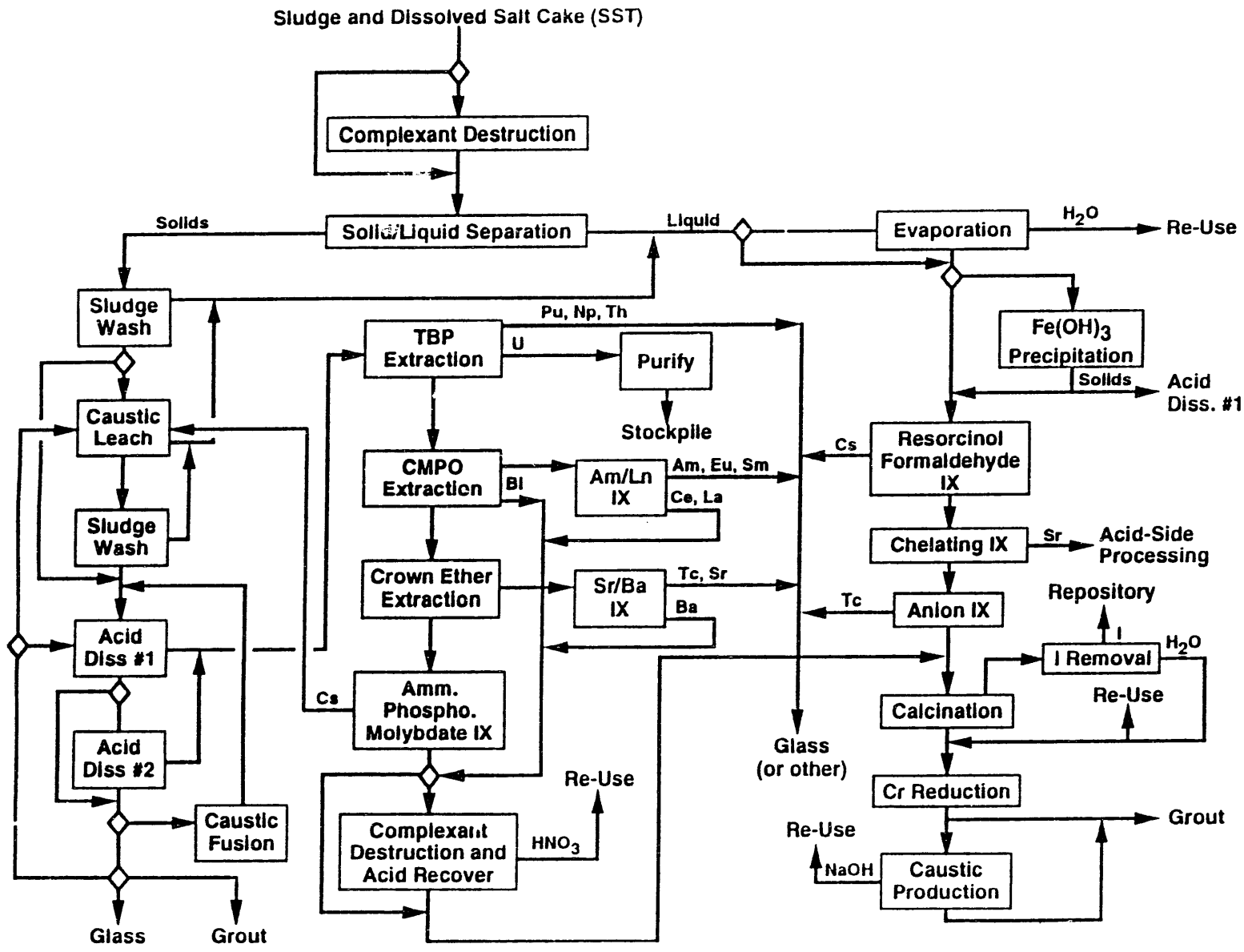

Figure 4.2. Flowsheet for the Example Clean Option Process

require special destruction processes or, alternatively, may be destroyed on calcination. Similarly, some steps employ oxalic acid, which may also have to be destroyed. In any case, nitric acid can be recovered for re-use from the decontaminated dissolved sludge solution.

Alkaline solutions such as tank supernate, dissolved salt cake, caustic leach, and sludge wash must also be treated to remove many of the same radionuclides removed from the dissolved sludge solutions. If necessary, a carrier precipitation step with ferric hydroxide would be employed to remove plutonium (some of which might dissolve in the caustic leach). Cesium, strontium, and technetium are removed in separate ion exchange steps.

The decontaminated streams from both the acid-side and the basic-side processing steps are calcined to destroy nitrate (and nitrite) and organic complexants in order to achieve a more suitable LLW form. Iodine is recovered from the calcination off-gas stream for disposal. Sodium hydroxide solution is recovered from the calcination product to be used in several process steps, again to minimize the additions of new process chemicals that would increase the volume of the LLW.

This flowsheet will concentrate nearly all of the bulk components of the waste in the LLW stream, leaving thorium, transuranic elements, the heavier lanthanide elements, cesium, strontium, and technetium as candidates for disposal in HLW glass. Table 4.1 lists estimates of the number of

Table 4.1. Number of HLW Canisters Produced by Clean Option Flowsheet

Waste Components	Number of HLW Glass Canisters Required[a]
Cesium	$< 1 \times 10^1$ [b]
Heavy Lanthanides	$< 5 \times 10^1$
Strontium	5×10^2
Technetium	5×10^2
Thorium	1×10^2
Transuranics	$< 5 \times 10^1$

(a) Total for SST and DST wastes; considering each component separately; based on 1650 kg glass/canister, the quantities present in the wastes, and the allowed concentrations in glass (Table 3.4).
(b) Heat loading restrictions would require a higher number of canisters.

canisters resulting from treating both SST and DST wastes, considering each waste component and its limit to be independent of the others. The total of these separate considerations is ~ 1100 canisters. It is highly likely that component compatibilities will be sufficient to decrease this total to less than 1000 canisters. Coincidentally, this total is roughly comparable to the minimum number of canisters required, based solely on the heat generation contents and limits. If other disposition options that are readily available in the candidate flowsheet (e.g., decay storage of cesium and strontium, thorium to stockpile, technetium to transmutation) were selected, < 100 canisters would be required.

The key feature to achieving a minimum number of HLW canisters is the completeness of dissolution of the sludge components. Unless the undissolved material meets Class A LLW criteria, it will be disposed of in the HLW. In order to achieve the 1000-canister objective, the undissolved material must contain <2% of the aluminum, <5% of the chromium, and <0.1% of the sodium present in SST wastes.

Data on the concentration of selected radionuclides in the LLW generated during processing of SST waste (overall average basis) by this candidate flowsheet (Figure 4.2) are shown in Table 4.2. Radionuclides listed here are not only those included in the Class A criteria, but also some other long-lived fission product and source materials. Also included here are the DFs that are assumed to be provided by the flowsheet; the bases for these values will be discussed further in Volume 2.

The LLW from SSTs would contain a total of ~0.6 Ci/m^3 if the indicated flowsheet were implemented, compared with ~ 120 Ci/m^3 if all of the radioactivity in SSTs were contained in the same volume. The major radionuclide remaining is Ni-63; addition of a nickel removal step to the flowsheet will allow a large further reduction in total radionuclide content.

The residual radionuclide content of the SST and DST LLW grout resulting from this "clean" approach is only ~ 0.34 MCi, and will be substantially lower when nickel removal is included in the flowsheet. The 0.34 MCi value is ~50-fold lower than that in the reference case.

Because of the recycling of chemicals (primarily sodium hydroxide) in the candidate flowsheet, very little new chemical addition to the LLW occurs. The addition of sodium as sodium nitrite (for neptunium recovery) and sodium carbonate used for solvent washing is estimated to amount to only 0.4% of sodium already present in SST waste. Thus, the LLW volume resulting from implementation of this flowsheet will be markedly less than that resulting from other approaches, where added nitric acid is neutralized by adding sodium hydroxide.

The volume of SST LLW grout resulting from use of this approach is about 4.6 x 10^5 m^3 (based on 5M sodium in grout). Similarly, the volume of SST and DST LLW grout would be about 6.3 x 10^5 m^3; less than half of that in the reference case. The majority of this reduction must result from recovery and recycling of water and key chemicals added during processing of the waste (i.e., as nitric acid and sodium hydroxide). This approach could also be incorporated into the reference case without the development of new separation technology.

Table 4.2. Concentration of Radionuclides in the LLW in the Clean Option Example Flowsheet

	Concentration, Ci/m³			
		In SST Waste at 5M Na		
Radionuclides	Class A Limit	Before Treatment	In LLW	Treatment DF Assumed
Class A				
C-14	8×10^{-1}	3×10^{-4}	3×10^{-4}	1
Ni-63	3.5×10^{0}	6×10^{-1}	6×10^{-1}	1
Sr-90	4×10^{-2}	1×10^{2}	1×10^{-2}	10^{4}
Tc-99	3×10^{-1}	2×10^{-2}	2×10^{-4}	10^{2}
I-129	8×10^{-3}	5×10^{-5}	5×10^{-6}	10
Cs-137	1×10^{0}	2×10^{1}	2×10^{-3}	10^{4}
Np-237		7×10^{-5}	7×10^{-7}	10^{2}
Pu-239	1.7×10^{-2} [a]	6×10^{-2}	6×10^{-6}	10^{4}
Am-241		8×10^{-2}	8×10^{-6}	10^{4}
Other				
Se-79		3×10^{-5}	3×10^{-5}	1
Zr-93		9×10^{-3}	9×10^{-3}	1
Pd-107		7×10^{-5}	7×10^{-5}	1
Sn-126		1×10^{-3}	1×10^{-3}	1
Sm-151		1×10^{0}	1×10^{-4}	10^{4}
Th-232		3×10^{-6}	3×10^{-8}	10^{2}
U-238		9×10^{-4}	9×10^{-8}	10^{4}

(a) For a waste form density of 1.7 g/mL.

5.0 Technical Issues

This report describes a "clean" option for tank waste disposal that relies on extrapolation of laboratory experience to industrial application. A committee of national technical experts agreed that the process chemistry for a clean option is feasible and identified a set of technical issues to be resolved before it is implemented.

To define the major issues, the committee listed the areas of significant concern and divided the list into five categories:

1. feasibility issues that, if not resolved, make it impossible for the clean option to succeed

2. key issues that, if not resolved, affect the ability of the clean option to meet its goals

3. optimization issues where a high degree of confidence exists that a problem can be resolved with only minor development

4. other issues that may have a minor impact on the clean option

5. general issues not specific to the clean option.

The technical issues list shown in Table 5.1 was then derived to serve as a basis for a development program.

The feasibility issues were dissolution of solids, actual decontamination factors achievable in full-scale operating facilities, and liquid/solid separations. If heat generation is ignored, the amount and composition of the undissolved solids having TRU content greater than LLW limits may determine the numbers of glass canisters needed to dispose of tank waste. Actual decontamination factors achieved by the individual processes are uncertain. The conditions achievable in the laboratory or pilot plants are often difficult to maintain in a full-scale facility because of cross contamination, contaminant breakthrough, and solid carry-over in the liquid/solid separations, for example. However, improved online instrumentation or sequential processing with lag storage, where decontamination of individual batches is verified before moving on to the next step, should eliminate many of those problems.

Table 5.1. Clean Option Technical Issues

Main Issues	Feasibility	Key Success	Optimization
Complete dissolution or accepted residual	X		
Specific separations An/Ln, Sr/Ba, Tc		X	
Variable composition			X
Resin, solvent, organic destruction		X	
Np chemistry-oxidation state			X
Recycle		X	
Actual field DFs	X		
Backup assurance - polishers			X
Process flexibility & robustness		X	
Solid/liquid separations	X		
Process chemistry - chemistry/equip.		X	
Sec. waste generation		X	
Nitrate destruction			X
Maintenance and operability			X
Other Issues			
Flowsheet configuration			
Impact of changes in waste form specification			
Grout/glass behavior			
General Issues			
Radioactivity and volume of grout or LLW form			
Impact on cost and schedule			
Waste acceptance criteria			
Timing			
Tank residuals - aggressive retrieval			
Criticality			

6.0 Conclusions and Recommendations

The principal goal of the clean option is to achieve dramatic reductions in both the volume of high-level waste glass to be sent offsite and the radioactivity and toxicity of the low-level waste to be left at Hanford. At the same time there will be no significant increase in the total amount of waste. These goals are reflected in the specific objectives discussed in this report. The evaluation conducted here concluded that the process chemistry required to meet these objectives rests on a firm technical basis because demonstrated separation steps have been identified and connected in a flowsheet that meets the clean option objectives.

This study has focused on process chemistry because it is the foundation for pursuing the clean option goals. Now that process chemistry has been addressed, the overall option should be examined more completely. The flowsheets from this effort can provide the basis for preliminary estimates of some aspects, such as cost, but a more detailed engineering description will eventually be required to draw meaningful comparisons with other options. Additionally, this option should now be explored as a system rather than as a variant of the reference option. In particular, potential advantages of the clean option (e.g., lower costs from grout and glass volume reduction; reduced grout barrier requirements; and increased institutional acceptability) should be weighed at the system level. Also, implementation of this option changes requirements for other parts of the TWRS, including retrieval, characterization, and disposal.

Finally it is noted that successful implementation of this option would require an aggressive pretreatment technology program to address the key technical issues identified in this report. Because many of these issues must also be addressed for successful implementation of the reference case, pursuing the clean option would focus pretreatment technology development and would help reduce the technical risk for TWRS.

7.0 References

Buck, J. W., et al. 1991. *Preliminary Recommendations on the Design of the Characterization Program for the Hanford Site Single-Shell Tanks--A System Analysis*. PNL-7573, Vol. 2, Pacific Northwest Laboratory, Richland, Washington.

Droppo, J. G., Jr., et al. 1991. *Single-Shell Tank Constituent Rankings for Use in Preparing Waste Characterization Plans*. PNL-7572, Pacific Northwest Laboratory, Richland, Washington.

Grygiel, M. L., et al. 1991. *Tank Waste Disposal Program Redefinition*. WHC-EP-0475, Rev. 0, Westinghouse Hanford Company, Richland, Washington.

U.S. Department of Energy (DOE). 1987. *Final Environmental Impact Statement - Disposal of Hanford Defense High-Level, Transuranic, and Tank Wastes*. DOE/EIS-0113, Richland, Washington.

10 CFR 61. 1988. U.S. Nuclear Regulatory Commission, "Licensing Requirements for Land Disposal of Radioactive Waste." *U.S Code of Federal Regulations*.

Distribution

No. of
Copies

OFFSITE

12 DOE/Office of Scientific and Technical Information

J. C. Tseng
U.S. Department of Energy
EM-36, Trevion II Bldg.
12800 Middlebrook Road
Germantown, MD 20874

M. Attrep, Jr.
Los Alamos National Laboratory
P.O. Box 1663
SM30, MS-J514
Los Alamos, NM 87545

J. T. Bell
Oak Ridge National Laboratory
Bldg. 4501, MS-6223
P.O. Box 2008
Oak Ridge, TN 37831-6223

D. O. Campbell
102 Windham Road
Oak Ridge, TN 37830

E. D. Collins
Oak Ridge National Laboratory
P.O. Box 2008, MS-6385
Oak Ridge, TN 37831-6223

H. J. Dewey
Los Alamos National Laboratory
P.O. Box 1663
TA3, SM30, MS-H854
Los Alamos, NM 87545

No. of
Copies

T. Fryberger
U.S. Department of Energy
Trevion II Bldg.
12800 Middlebrook Road
Germantown, MD 20874

S. M. Gibson
U.S. Department of Energy
Trevion II Bldg.
12800 Middlebrook Road
Germantown, MD 20874

E. P. Horwitz
Argonne National Laboratory
9700 South Cass Avenue
Argonne, IL 60439

W. W. Schultz
727 Sweetleaf Driver
Wilmington, DE 19808

M. C. Thompson
Westinghouse Savannah River Company
Savannah River Laboratory
Aiken, SC 29808

G. F. Vandegrift
Argonne National Laboratory
Building 205
9700 South Cass Avenue
Argonne, IL 60439

S. M. Wolf
U.S. Department of Energy
EM-542, Trevion II Bldg.
12800 Middlebrook Road
Germantown, MD 20874

DO NOT MICROFILM
THIS PAGE

No. of
Copies

S. L. Yarbro
Los Almos National Laboratory
P.O. Box 1663
MS-E501
Los Alamos, NM 87545

ONSITE

DOE Richland Field Office

S. T. Burnum

10 Westinghouse Hanford Company

J. N. Appel
S. A. Barker
R. G. Cowan
J. S. Garfield
R. L. Gilchrist
H. D. Harmon
J. J. Holmes
G. Jansen, Jr.
W. C. Miller
D. J. Newland

40 Pacific Northwest Laboratory

E. G. Baker
G. H. Bryan
N. G. Colton

No. of
Copies

J. T. Fulton
M. S. Hanson
B. M. Johnson
E. O. Jones
M. L. Knotek
M. R. Kreiter
W. L. Kuhn
D. E. Kurath
G. J. Lumetta
J. L. McElroy
G. W. McNair
G. B. Mellinger
M. M. Mitchell
G. B. Morgan
J. R. Morrey
R. K. Quinn
L. J. Sealock, Jr.
R. D. Scheele
J. D. Spencer
J. L. Straalsund (10)
J. L. Swanson
W. G. Richmond
Publishing Coordination
Technical Report Files (5)

END

DATE FILMED

3/15/93