ORNL/TM-1999/330

Fiscal Year 1999 Cold Demonstration of the Multi-Point Injection (MPI™) Process for Stabilizing Contaminated Sludge in Buried Horizontal Tanks with Limited Access at the Oak Ridge National Laboratory and Savannah River Site

J. L. Kauschinger
Ground Environmental Services
200 Berry Glen Court
Alpharetta, Georgia 30202

B. E. Lewis
R. D. Spence
Oak Ridge National Laboratory
Oak Ridge, Tennessee 37831

February 2000

Prepared by the
OAK RIDGE NATIONAL LABORATORY
Oak Ridge, Tennessee 37831
Managed by
LOCKHEED MARTIN ENERGY RESEARCH CORPORATION
For the
U.S. DEPARTMENT OF ENERGY
Under contract DE-AC05-96OR22464

"The submitted manuscript has been authored by a contractor of the U.S. Government under contract No. DE-AC05-96OR22464. Accordingly, the U.S. Government retains a paid-up, nonexclusive, irrevocable, worldwide license to publish or reproduce the published form of this contribution, prepare derivative works, distribute copies to the public, and perform publicly and display publicly, or allow others to do so, for U.S. Government purposes."

INTELLECTUAL PROPERTY DISCLOSURE STATEMENT

The multi-point injection (MPI™) system is a patented technology exclusively licensed to Ground Environmental Services, Inc. (GES), by the inventor, Dr. Joseph L. Kauschinger. It is covered under U.S. Patents 5,645,377 and 5,860,907 with other patents pending. The MPI system has been reduced to practice using private corporate funding to demonstrate its the practicability. The cold demonstration was performed and this report was prepared as part of a subcontract for Lockheed Martin Energy Research Corporation (LMER) on a no-royalty-fee basis. In consideration of GES's temporarily waving the royalty fees for the work described in this report, any information presented at meetings or in reports or technical memorandum submitted as part of the subcontract between GES and LMER will be considered (1) as limited rights data, as defined in the subcontract terms with respect to the MPI tools and procedures used, and (2) not construed to provide any other license or transfer of technology to Lockheed Martin or its subsidiaries, the U.S. government, or any other entity reviewing this report.

This intellectual property disclosure statement must accompany any reproduction or use of this memorandum. All rights are reserved by GES.

CONTENTS

INTELLECTUAL PROPERTY DISCLOSURE STATEMENT ii

CONTENTS iii

LIST OF TABLES iv

LIST OF FIGURES iv

ACRONYMS vi

EXECUTIVE SUMMARY vii

1. INTRODUCTION 1

1.1 GENERAL FEATURES OF THE MULTI-POINT (MPI™) TECHNOLOGY 1

1.2 REVIEW OF FY 1998 RESULTS FOR SMALL-DIAMETER CYLINDRICAL TANKS 2

1.3 TANK SELECTION FOR FY 1999 MPI™ DEMONSTRATION 4

1.3.1 ORNL OHF Tanks 4

1.3.2 SRS Tank S-21 6

1.4 MPI™ TOOL DEPLOYMENT CONSIDERATIONS 8

2. MPI™ GENERAL TEST PROGRAM FOR HORIZONTAL TANKS WITH LIMITED ACCESS 11

2.1 MAJOR PARTICIPANTS AND SUPPLIERS 11

2.2 PUMPABILITY OF ORNL SLAG-CEMENT FORMULATION 11

2.2.1 FY 1998 Pumpability Test 11

2.2.2 FY 1999 Pumpability Test 12

2.3 MPI™ INJECTION OF ORNL AND SRS TEST TANKS 13

2.4 NONHAZARDOUS PHYSICAL SURROGATE 13

2.4.1 ORNL Physical Surrogate 13

2.4.2 SRS Physical Surrogate 15

2.5 EQUIPMENT LAYOUT 17

2.5.1 Dry Blend Storage and Grout Mixing Plant 18

2.5.2 High-Pressure Pumps 18

2.6 INSTALLATION OF MPI TOOLS 20

2.6.1 MPI Process Inside the ORNL Test Tank 20

2.6.2 MPI Process Inside the SRS Test Tank 20

2.7 EFFECT OF JETTING DIRECTLY ON METAL WALL 25

3. EXHUMATION OF GROUTED MONOLITH 27

4. CONCLUSIONS 29

5. REFERENCES 30

LIST OF TABLES

TABLE 1. OHF TANK DESCRIPTIONS. 5
TABLE 2. GENERAL INFORMATION ON SRS TANK S-21. 7
TABLE 3. SLAG-CEMENT GROUT FORMULATION DEVELOPED AT ORNL AND USED DURING FY 1998 AND FY 1999 COLD DEMONSTRATIONS OF THE MPI TECHNOLOGY. 12

LIST OF FIGURES

FIG. 1. PHOTOGRAPH OF MPI VERTICAL TOOL LYING ON THE GROUND DURING TRAINING SESSIONS FOR THE FY 1998 MPI DEMONSTRATION IN DUNCAN, OKLAHOMA. 2
FIG. 2. PHOTOGRAPH SHOWING A GENERAL OVERVIEW OF THE TEST TANK USED DURING THE FY 1999 COLD DEMONSTRATION OF MPI TECHNOLOGY. 6
FIG. 3. SKETCH OF SRS ORWBG TANK S-21. NOTE: REPRODUCED FROM A. PRESTON, *TECHNICAL REPORT ON THE OLD SOLVENT TANKS VIDEO SURVEY SUMMARY*, WSRC-RP-98-04225. 7
FIG. 4. ELEVATION AND PLAN VIEWS OF ORNL OHF TEST TANK, ILLUSTRATING THE OVERALL CONCEPT FOR DEPLOYMENT OF THE MPI TECHNOLOGY. NOTE: ALL INFORMATION IN THIS FIGURE IS MARKED AS LIMITED RIGHTS DATA UNDER THE TERMS OF THE SUBCONTRACTS BETWEEN GES AND LMER. MPI IS PROTECTED UNDER U.S. PATENTS NOS. 5,860,907 AND 5,645,377 WITH SEVERAL OTHER PATENTS PENDING. 9
FIG. 5. ELEVATION AND PLAN VIEWS OF SRS TEST TANK, ILLUSTRATING THE OVERALL CONCEPT FOR DEPLOYMENT OF THE MPI TECHNOLOGY. NOTE: ALL INFORMATION IN THIS FIGURE IS MARKED AS LIMITED RIGHTS DATA UNDER THE TERMS OF THE SUBCONTRACTS BETWEEN GES AND LMER. MPI IS PROTECTED UNDER U.S. PATENTS NOS. 5,860,907 AND 5,645,377 WITH SEVERAL OTHER PATENTS PENDING. 10
FIG. 6. ELEVATION AND PLAN VIEW OF ORNL OHF TEST TANK, ILLUSTRATING THE TYPE AND LOCATION OF PHYSICAL SURROGATES. 14
FIG. 7. ELEVATION AND PLAN VIEW OF THE SRS TEST TANK, ILLUSTRATING THE TYPE AND LOCATION OF PHYSICAL SURROGATES. 16
FIG. 8. EQUIPMENT LAYOUT FOR COLD DEMONSTRATION. 17
FIG. 9. OVERVIEW OF EQUIPMENT USED DURING THE FY 1999 MPI COLD DEMONSTRATION IN ODESSA, TEXAS. 19
FIG. 10. CLOSE-UP PHOTOGRAPHS OF MPI TOOL USED IN SRS TANK DURING FY 1999 COLD DEMONSTRATION: (A) INSERTION INTO 4-IN.-DIAM RISER PIPE AND (B) TOOL BEING LOWERED THROUGH CARRIER CASING INSIDE SRS TEST TANK. NOTE: ALL INFORMATION IN THIS FIGURE IS MARKED AS LIMITED RIGHTS DATA UNDER THE TERMS OF THE SUBCONTRACTS BETWEEN GES AND LMER. MPI IS PROTECTED UNDER U.S. PATENTS NOS. 5,860,907 AND 5,645,377 WITH SEVERAL OTHER PATENTS PENDING. 21
FIG. 11. SERIES OF PHOTOGRAPHS SHOWING MPI TOOLS BEING PUSHED THROUGH SRS TEST TANK: (A) MPI TOOL WHIPSTOCK AND COAL CHUTE, (B) TOOL BEING PUSHED ALONG FLOOR AND PASSING SECOND CARRIER CASING, (C) TOOL HITTING THE END WALL OF TEST TANK, (D) VERTICAL TOOL INSERTED INSIDE BOTTOM OF LEXAN™ PIPE AND RELATIONSHIP TO TWO MPI FLOOR TOOLS. NOTE: ALL INFORMATION IN THIS FIGURE IS MARKED AS LIMITED RIGHTS DATA UNDER THE TERMS OF THE SUBCONTRACTS BETWEEN GES AND LMER. MPI IS PROTECTED UNDER U.S. PATENTS NOS. 5,860,907 AND 5,645,377 WITH SEVERAL OTHER PATENTS PENDING. 22
FIG. 12. SERIES OF PHOTOGRAPHS SHOWING THE MPI FLOOR TOOL BEING ACTIVATED AT SURFACE: (A) OVERVIEW OF TURBULENCE CREATED BY MPI VERTICAL AND FLOOR TOOLS, (B) CLOSE-UP OF MPI FLOOR TOOL, (C) TOOL AND HOSE AFTER 5 MIN OF JETTING AT 400 GPM AND 6,000 PSI. NOTE: ALL INFORMATION IN THIS FIGURE IS MARKED AS LIMITED RIGHTS DATA UNDER THE TERMS OF THE SUBCONTRACTS BETWEEN GES AND LMER. MPI IS PROTECTED UNDER U.S. PATENTS NOS. 5,860,907 AND 5,645,377 WITH SEVERAL OTHER PATENTS PENDING. 24

FIG. 13. MIXING SEQUENCE FOR SRS COLD TEST TANK: (A) INTERIOR OF TEST TANK BEFORE START OF MIXING, (B)–(E) INTERIOR OF THE TEST TANK OVER ~60-S INTERVAL OF SEQUENTIAL MIXING ACTION (NOTE LARGE MASS IN UPPER RIGHT QUADRANT). 26
FIG. 14. PHOTOGRAPHS SHOWING THE SOLIDIFIED MASS AFTER MPI INJECTION IN THE SRS TEST TANK: (A) GENERAL VIEW OF TANK BOTTOM DRAIN, (B) CLOSE-UP OF GROUT FILLED DRAIN, (C) GENERAL VIEW OF TANK FLOOR INTERIOR DURING SAMPLE EXCAVATION...... 28

ACRONYMS

ALARA	As low as reasonably achievable
ANS	American Nuclear Society
ANSI	American National Standards Institutes
ASTM	American Society for Testing and Materials
CERCLA	Comprehensive Environmental Response, Compensation, and Liability Act
DOE	U. S. Department of Energy
EPA	U.S. Environmental Protection Agency
ER	Environmental restoration
FFCA	Federal Facilities Compliance Agreements
FY	Fiscal year
GAAT	Gunite and Associated Tanks
GES	Ground Environmental Services Inc.
LMER	Lockheed Martin Energy Research Inc.
MPI	Multi-Point-Injection™
MVST	Melton Valley Storage Tanks
OHF	Old Hydrofracture Facility
ORNL	Oak Ridge National Laboratory
ORWBG	Old Radioactive Waste Burial Ground
QA	Quality assurance
QC	Quality control
RCRA	Resource Conservation and Recovery Act
SRS	Savannah River Site
TRU	Transuranic
UST	Underground storage tanks

EXECUTIVE SUMMARY

A major problem faced by the U.S. Department of Energy is the remediation of buried tank waste. Exhumation of the sludge is currently the preferred remediation method. However, exhumation does not typically remove all the contaminated material from the tank. The best management practices for in-tank treatment of wastes require an integrated approach to develop appropriate treatment agents that can be safely delivered and uniformly mixed with the sludge. Ground Environmental Services, Inc., has developed and demonstrated a remotely controlled, high–velocity, jet-delivery system, which is termed Multi-Point-Injection (MPI™). This robust jet-delivery system has been used to create homogeneous monoliths containing shallow-buried miscellaneous waste in trenches [fiscal year (FY) 1995] and surrogate sludge in a cylindrical test tank (FY 1998). During the FY 1998 demonstration, the MPI process was able to successfully form a 32-ton uniform monolith in ~8 min. Analytical data indicated that 10 tons of a zeolite-type physical surrogate were uniformly mixed within the 40-in.-thick monolith without lifting the MPI jetting tools off the tank floor. Over 1,000 lb of cohesive surrogates, with consistencies of Gunite and Associated Tanks (GAATs) TH-4 and Hanford tank sludges, were easily mixed into the monolith without exceeding a core temperature of 100^0F during curing.

The treatment agents used during the MPI demonstrations in FY 1998 and 1999 had chemical properties that were shown to be effective in treating GAAT surrogate sludge and actual "hot" sludge taken from GAAT TH-4. The Resource Conservation and Recovery Act metals (mercuric chloride salts, lead oxide, and sodium di-chromate) in the sludge were immobilized to below their respective universal treatment standards at sludge loadings of 35 to 65%. The radioactive components, predominately ^{85}Sr and ^{137}Cs, typically exhibited excellent leach resistance with leachability indices of ~9 to 10, as measured in American National Standards Institutes, Inc.(ANSI)/American Nuclear Society (ANS) procedure ANSI/ANS-16.1, "Leach Test."

During FY 1999, a cold demonstration was successfully performed in which the MPI process was used to support hot closure activities at Oak Ridge National Laboratory for the Old Hydrofracture Facility waste tanks and at the Savannah River Site (SRS) for the Old Radioactive Waste Burial Ground solvent tanks. The unique aspects of the cold demonstration were related to the long, horizontal tank geometry and severely restricted access into the SRS tanks (4-in.-diam riser). The challenges presented by the long geometry and limited access were overcome by adapting the MPI tooling so that multiple jets could be deployed along a horizontal string. All injection activities were conducted from a remote location, with workers and capital equipment at least 100 ft away from the test tank. The FY 1999 demonstration showed that the MPI process is an efficient in situ delivery system, which provides superior health and safety protection to workers and capital equipment. A brief experiment was also conducted to show that the selected operating conditions for the MPI process does not damage tank walls.

The observations during these demonstrations support the conclusion that the MPI process can be successfully used to form uniform monoliths of sludge heel material inside of long horizontal tanks with limited access. Since this situation is analogous to a segment of a large, circular tank, the activities demonstrated for the SRS application need only to be replicated to provide mixing and mobilization across the entire floor of an 85-ft-diam tank. The

observations also indicate a need for improved sampling and/or analysis techniques for grouting demonstrations performed in hot, dry climates.

1. INTRODUCTION

Operations at U.S. Department of Energy (DOE) sites, such as Oak Ridge National Laboratory (ORNL) and Savannah River Site (SRS), have generated a variety of waste streams that have resulted in releases to the environment. These releases have created areas or suspected areas of contamination and contaminated facilities that could contain hazardous, radioactive, and/or mixed wastes. As a result, these areas or facilities are subject to environmental assessments and possible restoration, primarily under the provisions of the Comprehensive Environmental Response, Compensation, and Liability Act (CERCLA) and the Resource Conservation and Recovery Act (RCRA).

To reduce risks to human health and the environment and to comply with the requirements of the various environmental laws and regulations, multidisciplinary environmental restoration (ER) programs [which include remedial actions and decontamination and decommissioning and waste management programs] have been established to identify, characterize, and remediate sites and facilities at both ORNL and SRS. To coordinate and ensure compliance with the applicable laws and regulations, DOE, the U.S. Environmental Protection Agency (EPA) regions, and the respective state environmental agencies have entered into Federal Facilities Compliance Agreements (FFCA) and/or Consent Agreements. The Environmental Management, Office of Technology Development, and other agencies provide needed technology development and demonstration support for ER programs. The work described in this report is an illustration of the cooperation between and among the DOE, Lockheed Martin Energy Research (LMER) — ORNL, Westinghouse — SRS, Bechtel Jacobs Company, and Ground Environmental Services, Inc., (GES), a small business technology provider.

1.1 GENERAL FEATURES OF THE MULTI-POINT (MPI™) TECHNOLOGY

MPI technology is a general-purpose, jet-delivery system for the in situ treatment of radiological and chemical wastes that have been deposited into buried tanks, shallow trenches, or pits. The MPI system relies upon the interaction of multiple, high-speed monodirectional jets to turbulently mix the waste with various chemical agents. The turbulence created by an MPI process is illustrated in the photograph, shown as Fig. 1, which depicts a vertical injection tool lying on the ground during a training session for the fiscal year (FY) 1998 MPI demonstration in Duncan, Oklahoma. The monodirectional jetting tool greatly simplifies the equipment used for in situ treatment of wastes since rotation of the jetting tools is not needed. Instead of rod rotation, the mixing of the waste occurs as multiple jet streams from the MPI jets expand as they travel through the waste. This action leads to very large and turbulent jet mixing, which helps to uniformly mix the waste with various treatment agents designed to stabilize and immobilize the waste. Perturbations, such as other jet streams or obstructions (e.g., internal piping or structural members) in the path of the jet stream,) help to disperse the jet streams for more efficient mixing. The locations of the MPI jets are situated in the best possible positions with respect to the geometry of the tank and sludge present to provide the most aggressive mixing and interaction of opposing jets. For heel materials, the sludge is usually thin and spread out along the entire tank bottom. The multi-point injections are performed over a limited thickness to incrementally form thin plates of treatment. The jet nozzles used during the cold demonstration conducted in FY 1998 were placed within 1.5 in. of the tank bottom and projected the jet streams horizontally. For shallow tank sludge (2–3 ft

thick), the injection tools need not be lifted. For relatively thick sludge (>5 ft), vertical jetting tools can be remotely lifted because they can be suspended from hoses attached to winches.

The MPI techniques were initially devised to protect construction workers and capital equipment from becoming contaminated by using as low as reasonably achievable (ALARA) principles. Once this safety requirement was satisfied, emphasis was re-directed at making the delivery system as robust and as broadly applicable as possible. The constraints of safety and robustness naturally drove the delivery system to be based upon jetting technology. The major capital investment for jetting is related to the cost of the high-pressure pumps and surface piping, which are conventional oil-field rental equipment. During the MPI process, this expensive equipment is located in the support zone, and the power generated by the pumps is used to treat contamination via very inexpensive and disposable equipment (e.g., plastic pipe, hoses, and carbide jet nozzles). Therefore, the cost of the remediation can be better predicted since loss of expensive capital equipment caused by contamination is highly unlikely.

ORNL-Photo-401-2000

Fig. 1. Photograph of MPI vertical tool lying on the ground during training sessions for the FY 1998 MPI demonstration in Duncan, Oklahoma.

1.2 REVIEW OF FY 1998 RESULTS FOR SMALL-DIAMETER CYLINDRICAL TANKS

The full potential of in-tank treatment processes can be realized only if the appropriate solidification agents are chosen and delivered using a robust injection system. During FY 1998

LMER, in cooperation with GES, performed an integrated demonstration in which a slag–cement–fly ash–red clay grout was developed for in-tank treatment of Gunite and Associated Tank (GAAT) sludge, especially tank TH-4. The general results from the FY 1998 demonstration indicate:

- Laboratory bench-scale work on surrogate and hot sludges from GAAT tank TH-4 can be effectively treated at sludge concentrations of 35 to 65% of the total weight of the monolith. The RCRA metals (mercuric chloride salts, lead oxide, and sodium di-chromate) in the sludge surrogate were immobilized to below their respective universal treatment standards. The radioactive components, predominately ^{85}Sr and ^{137}Cs, typically exhibited excellent leach resistance with leachability indices of ~9 to 10 as measured in the American National Standards Institutes, Inc. (ANSI)/American Nuclear Society (ANS) procedure ANSI/ANS-16.1, "Leach Test."

- The cold-field component of the demonstration proved that the MPI process is a robust jet-delivery system capable of forming a 32-ton uniform monolith in ~8 min. Analytical data indicated that 10 tons of a zeolite-type physical surrogate (quartz sand 0.5 to 0.8 mm) were uniformly mixed within the 40-in.-thick monolith without lifting the MPI jetting tools off the tank floor. Over 1,000 lb of cohesive surrogates, with consistencies similar to those of GAAT TH-4 and Hanford sludges, were also placed within the test tank. These cohesive surrogates were easily mixed into the monolith. Review of the data from the cold-field demonstration indicates that the MPI process successfully delivered the correct gross amount of treatment agents specified from the ORNL bench-scale studies. Exhumation of the monolith provided visual evidence that a 15-ft-diam by 40-in.-thick uniform monolith was created. The maximum internal core temperature of the monolith reached only 100^0F during curing.

The simplicity of the MPI process allows the treatment of the physical surrogates to be accomplished remotely with all capital equipment and workers in the safety of a work zone ~200 ft away from the test tank. Only Iow-cost, disposable equipment (plastic pipe and steel tubes) come in contact with the sludge surrogate. The field quality controls (QCs) implemented during the cold demonstration showed that the required level of treatment could be reproduced accurately in the field. The bulk-blended grout used during the cold demonstration had chemical properties that were shown to be effective in treating GAAT surrogate sludge and actual "hot" sludge taken from GAAT TH-4. The data show that there was excellent quality assurance (QA) in the field and that the correct amount of grout was injected to form a mixture with the required gross amount of constituents. A more detailed description of the FY 1998 demonstration can be found in Kauschinger et al. 1998.[1]

The success of the MPI demonstration in FY 1998 encouraged further demonstration and evaluation of the MPI process for applications in long, horizontal tanks (40 ft long) with limited access (riser pipe opening of 4-in. diam). The results from these demonstrations are covered in detail in this report.

1.3 TANK SELECTION FOR FY 1999 MPI™ DEMONSTRATION

The DOE is investigating potential tank-closure options for various underground storage tanks (USTs) at ORNL and SRS in compliance with the FFCA. A variety of options for tank closure are available. The successful demonstration of the MPI process in FY 1998 motivated DOE to examine the capabilities of this technology to treat buried sludge in horizontal tanks which have restricted surface access and some internal obstructions. After evaluation by ORNL and SRS, the following candidate "hot" test tanks were selected at each site:

ORNL: Old Hydrofracture Facility (OHF) tanks

SRS: Old Radioactive Waste Burial Ground (ORWBG) Tank S-21

The philosophy proposed to implement the MPI process for each of these tanks was to develop a tank-specific deployment strategy. In this manner the most efficient MPI jetting tools can be developed for treating an individual tank (or collection of similar tanks) at the lowest possible cost. The major driver for the current MPI demonstration was the ability to deploy the jetting tools inside buried tanks, which have limited surface access. Sections 1.3.1 and 1.3.2 provide a discussion of the issues related to the tanks at each site.

1.3.1 ORNL OHF Tanks

The OHF site was used to dispose of radioactive waste by injecting grout into shale formations 1,000 ft below ground. When operations ended, ~53,000 gal of radioactive transuranic (TRU) waste was left in 5 USTs at the site. Because of the age of the tanks, the radioactive TRU waste was retrieved and transferred to the Melton Valley Storage Tanks (MVSTs) for processing and disposal during the MVST–TRU Waste Treatment and Disposal Project.

The OHF tanks at ORNL consist of five horizontal, carbon-steel tanks ranging in size from 13,000 to 25,000 gal. The tanks are 8 to 10.5 ft in diam and ~24 to 44 ft long. Two of the tanks are rubber lined. Table 1 provides a summary description of each of the tanks. The tanks were in service from 1963 through 1980. Each tank has an 18-in.-diam riser in the center and a 26-in.-diam riser on each end. The spacing between risers for all five tanks ranges from 14 to 18 ft. The tanks contained an estimated ~9,000 gal of remote handled TRU sludge and 44,000 gal of supernatant before the retrieval operations. A borehole miner with an extendable nozzle was used in the retrieval of the sludges and supernates from these tanks.[2] Borehole miner technology was previously commercially used in hydraulic mining operations.

Table 1. OHF tank descriptions.

Tank	Nominal capacity (gal)	Diameter (ft)	Approximate length (ft)	Material	Residual inventory (gal)	Internal components
T-1	15,000	8.0	44.0	Carbon steel	111	Multiple air spargers
T-2	15,000	8.0	44.0	Carbon steel	222	Multiple air spargers
T-3	25,000	10.5	42.5	Carbon steel; rubber lined	40	Multiple air spargers and internal connections
T-4	25,000	10.5	42.5	Carbon steel; rubber lined	373	Multiple air spargers and internal connections
T-9	13,000	10.0	23.0	Carbon Steel	228	Multiple air spargers and submersible pumps

The baseline approach for removing the bulk sludges from the horizontal waste storage tanks was to use traditional single-point sluicing technology, which requires the use of large quantities of sluice water and cannot effectively be used for heel removal. Deployment of borehole miner technology with an extendable nozzle at the OHF site reduced the amount of sluice water required to remove bulk quantities of sludge and allowed for more focused efforts on hard-to-remove sludges. Video surveillance of each tank typically revealed piles of sludge had accumulated near the manhole entries at either end of each tank. The manholes were also the locations of the sump pumps that were used to retrieve the waste. The pumps and outlet hoses were abandoned inside the tanks. The liquid level inside each tank appears to be on the order of ~4 in.

A cold demonstration of the operation of the borehole miner retrieval system was undertaken before hot operations were begun at the OHF site. Two test tanks, each 21-ft long by 8-ft diam, were fabricated for the demonstration. These test tanks were also used for the FY 1999 MPI demonstration. One of the tanks used during the MPI cold demonstration is shown in the photograph (Fig. 2). Scaffolding was erected around the tank to facilitate entry into the tank, which was ~15 ft off the ground. This tank is illustrative of a near full-scale representation of OHF Tank T-9 and of half-scale representation of the other four tanks. The test tank had a total volume of ~8,000 gal and an empty weight of ~10,000 lb. The tank access openings, which are located 4 ft from the end of each tank, are each ~26-in. in diameter. The center-to-center spacing between the access ports is ~13 ft. The tank walls are constructed of 0.25-in.-thick steel.

One test tank was used for the ORNL portion of the MPI demonstration, and the second tank was used to simulate the conditions inside of the SRS tank S-21. General information on the SRS tank is discussed in the following.

ORNL-Photo-814-2000

Fig. 2. Photograph showing a general overview of the test tank used during the FY 1999 cold demonstration of MPI technology.

1.3.2 SRS Tank S-21

The ORWBG solvent tank S-21 was placed into service in November 1969. The tank is ~38.5 ft long and 10 ft in diameter and is comparable to the large OHF tanks. The summary information in Table 2 indicates that there are ~180 gal of liquid waste and 31 gal of sludge remaining in this tank.[3] The sketch of tank S-21, which is presented as Fig. 3, shows the added complexity related to tank access. Tank access is currently limited to only two 4-in.-diam schedule 40 steel riser pipes—with one pipe at each end of the tank.

Table 2. General information on SRS Tank S-21.

Item description	Parameter
Tank name	S-21
Tank installation date	November 1969
Tank Size (ft)	10.5 × 8.5
Tank capacity (gal)	24,940
Lifetime quantity of solvent stored (gal)	20,045
Estimated total volume of waste remaining (gal)	214
Estimated liquid currently stored in tank (gal)	183
Estimated sludge currently stored in tank (gal)	31
Tank features	One capped man way in tank ceiling located at west end of the tank.
Testing intervals for lower explosive limit (LEL) tank survey readings (ft)	*LEL (%)*
3	4
6	4
9	4
12	4
15	4
18	Not available

ORNL-Dwg-2000-2803

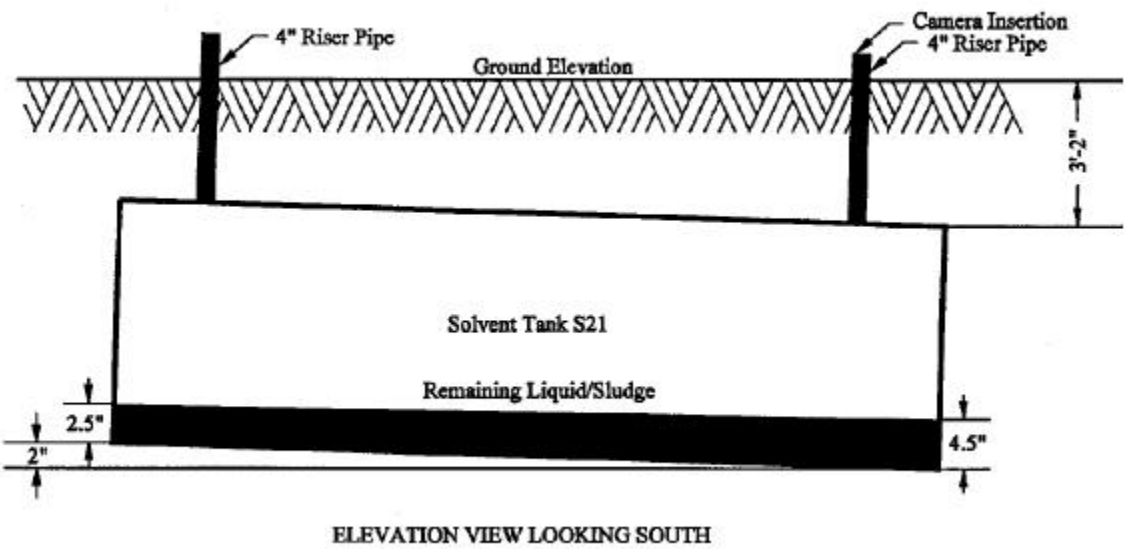

Fig. 3. Sketch of SRS ORWBG Tank S-21. Note: Reproduced from A. Preston, *Technical Report on the Old Solvent Tanks Video Survey Summary*, WSRC-RP-98-04225.

1.4 MPI™ TOOL DEPLOYMENT CONSIDERATIONS

Two major placement options are available for deploying the MPI jetting tools inside waste USTs. The simplest and potentially least expensive option is to drill small-diameter holes through the dome or roof of the tank and deploy jetting tools vertically. This was the option selected for the ORNL OHF tank demonstration, and is illustrated in the plan view and elevation sketch, which are shown in Fig. 4. The existing risers in the OHF tanks will provide convenient access points for the MPI tools during the actual hot deployment of this technology. The deployment is planned for FY 2000.

Two MPI jetting tools are placed into each large riser on top of the tank. During each injection, two tools at opposite ends of the tank are simultaneously operated using a pump supply pressure of 6,000 psi for a period of ~60 s. The pressure in the tank will remain at atmospheric with only the head pressure of the overlying grout and sludge at the tank bottom. Thereafter, the pumping is stopped, and the remaining two tools are used to perform the injection. This strategy of sequentially operating a set of two MPI tools was performed during the cold demonstration until a total of ~3,000 gal of grout were injected into the ORNL test tank.

The other way to perform the MPI process is to attach multiple jetting tools to a single high-pressure hose and then horizontally drill the multiple injection tool string into the sludge. This deployment strategy was the key to satisfying the tight access constraints placed upon the MPI injection performed in the SRS solvent tank demonstration. All tooling placed inside the cold test tank had to fit through a 4-in-diam riser pipe. The tank interface and MPI tooling were designed to install vertical and horizontal jetting tools through the same 4-in-diam opening, (Fig. 5). The jet stream pattern of the vertical tool resembles a starburst pattern, as illustrated in the vector diagram in Fig. 5b. The jetting patterns for the MPI floor tools also resemble a starburst. Both vertical and horizontal tools project a jet stream ~1.5 in. above the tank floor.

ORNL-Dwg-2000-2804

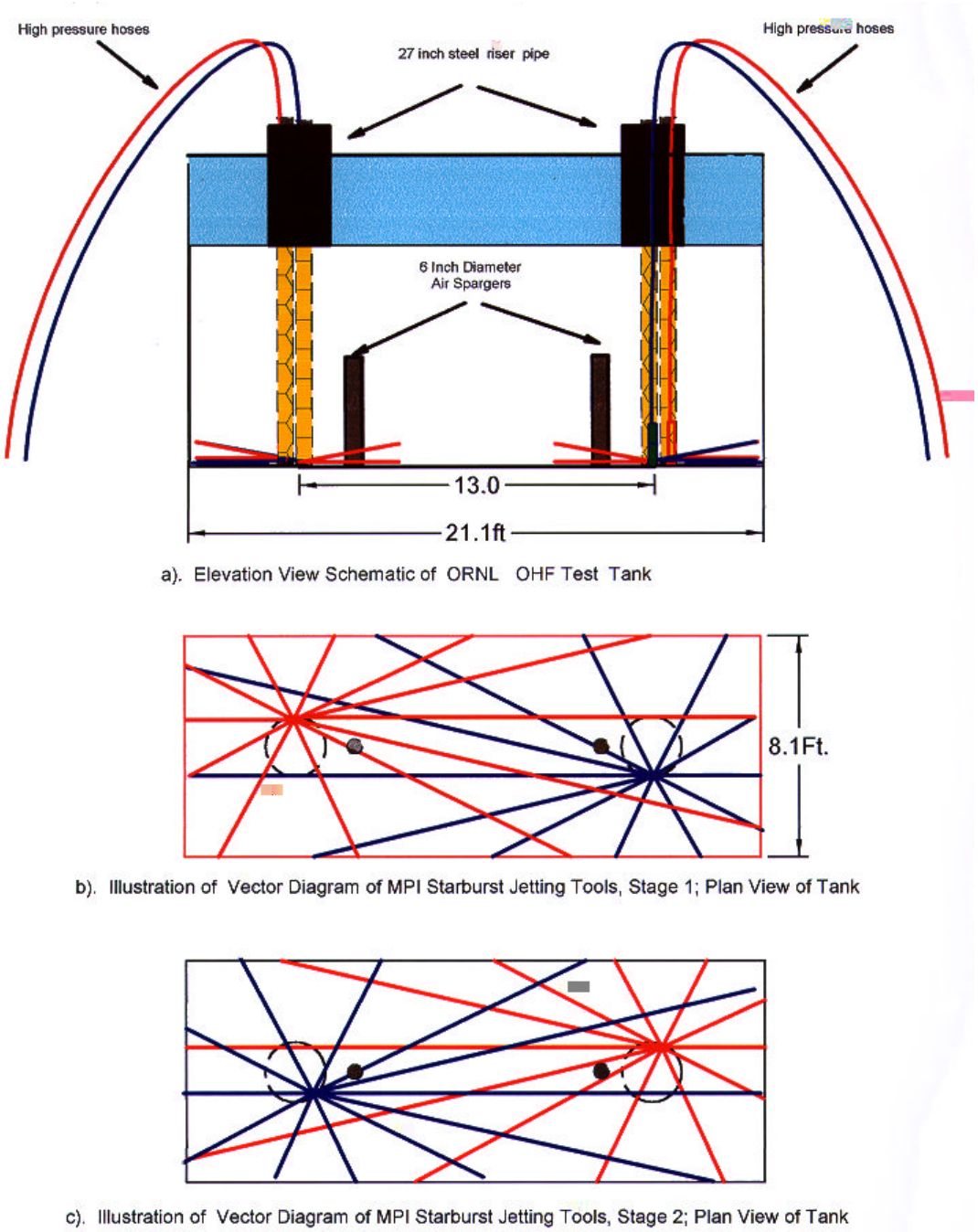

Fig. 4. Elevation and plan views of ORNL OHF test tank, illustrating the overall concept for deployment of the MPI technology. Note: All information in this figure is marked as limited rights data under the terms of the subcontracts between GES and LMER. MPI is protected under U.S. Patents Nos. 5,860,907 and 5,645,377 with several other patents pending.

ORNL-Dwg-2000-2805

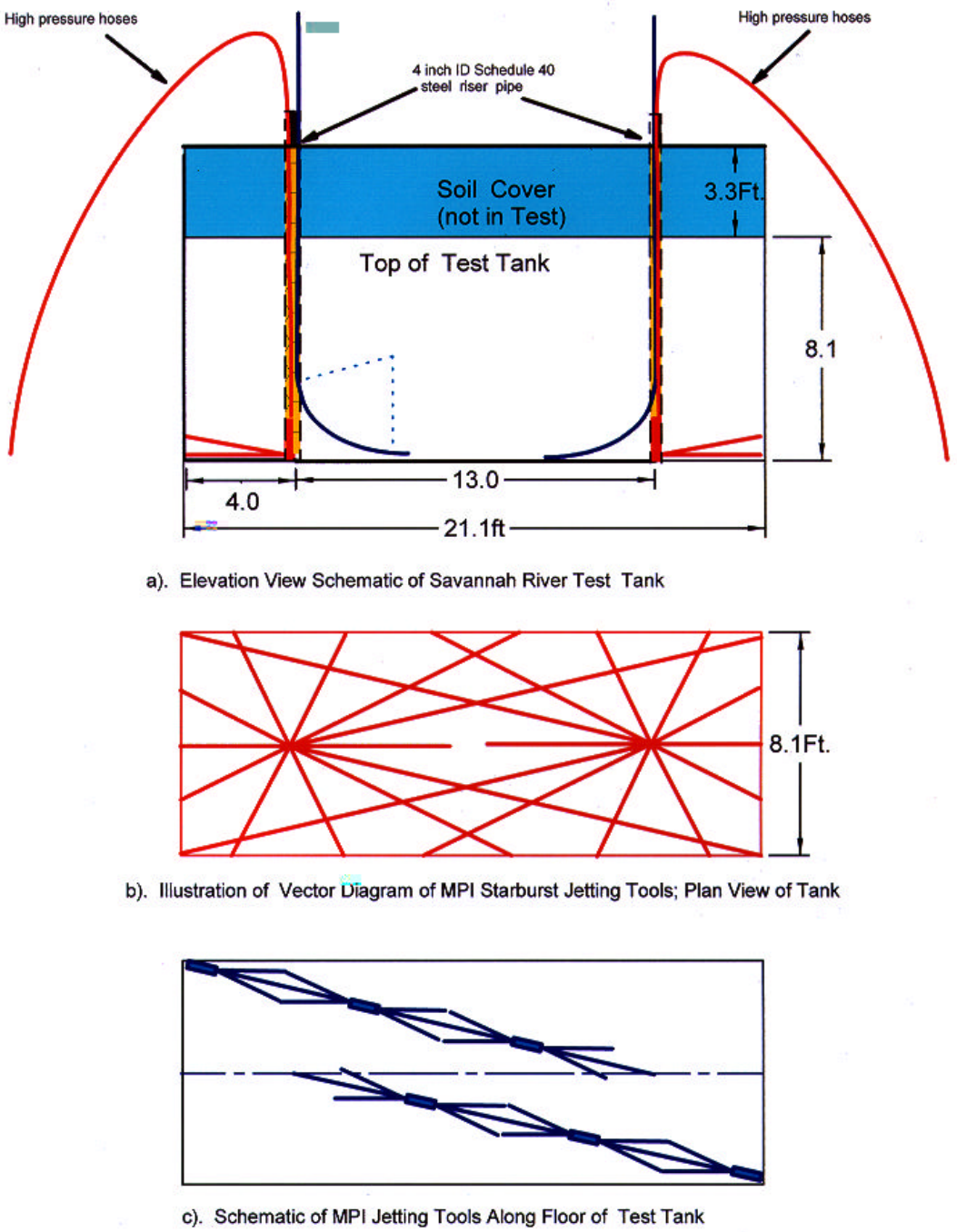

Fig. 5. Elevation and plan views of SRS test tank, illustrating the overall concept for deployment of the MPI technology. Note: All information in this Figure is marked as limited rights data under the terms of the subcontracts between GES and LMER. MPI is protected under U.S. Patents Nos. 5,860,907 and 5,645,377 with several other patents pending.

2. MPI™ GENERAL TEST PROGRAM FOR HORIZONTAL TANKS WITH LIMITED ACCESS

The FY 1999 cold field demonstration was composed of two major phases. The first phase consisted of the site setup and preliminary testing, which was followed by the full-scale MPI demonstration. The total field portion of the demonstration took about one week to perform. The actual injection of the ORNL and SRS test tanks took about 2 h. The entire cold demonstration required ~42 d to complete.

The major preliminary testing involved adjusting the ORNL grout formulation for pumpability, and verifying the stability of the jetting tools. The results from the pumpability tests are described in Sect. 2.2.

2.1 MAJOR PARTICIPANTS AND SUPPLIERS

The FY 1999 demonstration was conducted in July 1999 in Odessa, Texas, at the field offices of Freemyer Enterprises, which was also the high-pressure pump supplier for the project. Freemyer also provided the site health and safety officer, who monitored all aspects of the project, including the confined space entry work performed inside each test tank.

Fleet Cementers, a local grouting contractor, performed the bulk blending of the ORNL grout formulation. Fleet also supplied the bulk mixer and crew used to blend the grout.

GES provided the technical support and labor for implementing the MPI process, including the manufacture of all MPI tools for the project, other equipment, and manpower to prepare the test tanks and insert the tools into the tanks. GES also performed all QC/QA data collection and reporting for the cold demonstration.

LMER provided the in-tank camera and lighting system for the cold demonstration. The in-tank camera allowed remote visual observation of the MPI process during the injection and mixing process.

2.2 PUMPABILITY OF ORNL SLAG-CEMENT FORMULATION

The pumpability of the selected slag-cement formulation had to be verified before field demonstrations could be successfully accomplished. These tests validated the ability of the pumping system to provide a consistent flow of grout for the MPI process.

2.2.1 FY 1998 Pumpability Test

During the FY 1998 field test, a cement friction reducer (CFR-3) was required as a pump aid in the ORNL grout formulation. The friction reducer was added at a concentration of ~0.5% by weight of the slag–cement–fly ash. Table 3 provides a breakdown of the ingredients used during the FY 1998 tests. This formulation effectively treated the GAAT tank sludge and sludge surrogates at waste concentrations of 35 to 65% of the total weight of the monolith. The RCRA metals (mercuric chloride salts, lead oxide, and sodium di-chromate) in the surrogate sludge were successfully immobilized to below their respective universal treatment standards.

The radioactive components, predominately ^{85}Sr and ^{137}Cs, typically had leachability indices of ~9 to 10 as measured in ANSI/ANS-16.1, "Leach Test." Although the 0.5% CFR3 additive did not have any adverse impact upon immobilizing the RCRA metals or radionuclides tested at ORNL in FY 1998, it was suggested that pumping tests be performed in FY 1999 to develop a pumpable ORNL formulation without relying upon any additives.

Table 3. Slag-cement grout formulation developed at ORNL and used during FY 1998 and FY 1999 cold demonstrations of the MPI technology.

	FY 1998 Wt %	FY 1999 Wt %
Portland Type I cement	10	14
Granulated blast furnace slag	40	38
Class F fly ash	40	38
Red clay	7	7
Bentonite	3	3
CFR-3	0.25	0
Water : solids ratio	0.48:1	0.75:1 and 1.3:1
Grout unit weight (lb/gal)	14.5	13.0 and 11.0

2.2.2 FY 1999 Pumpability Test

During the FY 1999 field demonstration the dry blend components listed in Table 3 were bulk blended and delivered to the test site in Odessa, Texas. There was a slight increase in the amount of cement used in the FY 1999 dry blend, (when compared to that which was used in FY 1998) because of the availability of slag-cement at proportions normally blended by Lonestar Cement at its Dallas, Texas, terminal. Since the quantity required for the demonstration was only 25 tons, it would have been prohibitively expensive to readjust the weighing scales at the terminal for such a small run of material.

The 3% bentonite, as specified in Table 3, is the concentration of bentonite in the total dry blend. However, to properly mix the bentonite with water, the bentonite was

the MPI injection. The grout viscosity at this unit weight was also able to support a handful of sand placed on top of a sample of the grout.

2.3 MPI™ INJECTION OF ORNL AND SRS TEST TANKS

After the pumpability tests were performed, the main portion of the MPI demonstration was conducted. The demonstration used the full complement of pumps, grout plant, manpower, and MPI tools, which will be employed during the "hot" demonstrations at ORNL and SRS in FY 2000. The details of the arrangement of the physical surrogate for each of the two tanks, equipment layout, installation procedure, and implementation of the MPI process are discussed in detail in the Sects. 2.4 through 2.6.

2.4 NONHAZARDOUS PHYSICAL SURROGATE

During the FY 1998 demonstration, fine white sand was used as a physical surrogate for rapidly settling sludge particles, such as zeolites. A clay-water-gravel-dye mixture was used as a surrogate for cohesive type of sludges. Representatives from Hanford provided guidance concerning the consistency for the cohesive surrogate. A similar type of sand and clay material was used during the FY 1999 cold demonstration. The uniform sand particles make a convenient tracer, which can be easily separated from the ORNL grout formulation using standard American Society for Testing and Materials (ASTM) sieve analysis before setting.

2.4.1 ORNL Physical Surrogate

The videotape footage, which was gathered from the OHF tank inspection after completing waste retrieval operations, was used as the basis for selecting the type and arrangement of the physical surrogate inside the ORNL test tank. This arrangement is represented in Fig. 6. The elevation view of the test tank, as depicted in Fig. 6a, shows that 4 in. of silty water, which was in the bottom of the test tank, corresponds to a width of ~3.3 ft. This material depth is equivalent to a volume of ~120 gal in an 8-ft-diam tank. The solid components of the physical surrogate are depicted in Fig. 6c and are described as follows:

- All four corners of the test tank contained piles of a gravel-sand-clay mixture piled against the tank walls. The components of the mixture consisted of the following:

Ball clay	90 lb
Water	65 lb
Stone	10 lb

  The Ball clay used here is a highly plastic kaolin-type clay with a liquid limit water content of 50% and a plasticity index of 28%. The water-to-Ball clay ratio (65:90 = 72%), which was used to prepare the ORNL samples, is nearly twice the water content at which the Ball clay starts to behave as a semisolid. This gravimetric water content and associated consistency is stiffer than the actual sludge remaining in the OHF tanks. The measured undrained shear strength corresponding to the 72% water content of the Ball clay was ~15 lb/ft^2.

A total of six batches of the previously described formulation were piled against the end walls of the tank, as illustrated in Fig. 6c. A total of ~1,000 lb of cohesive surrogate were used during the ORNL demonstration.

ORNL-Dwg-2000-2806

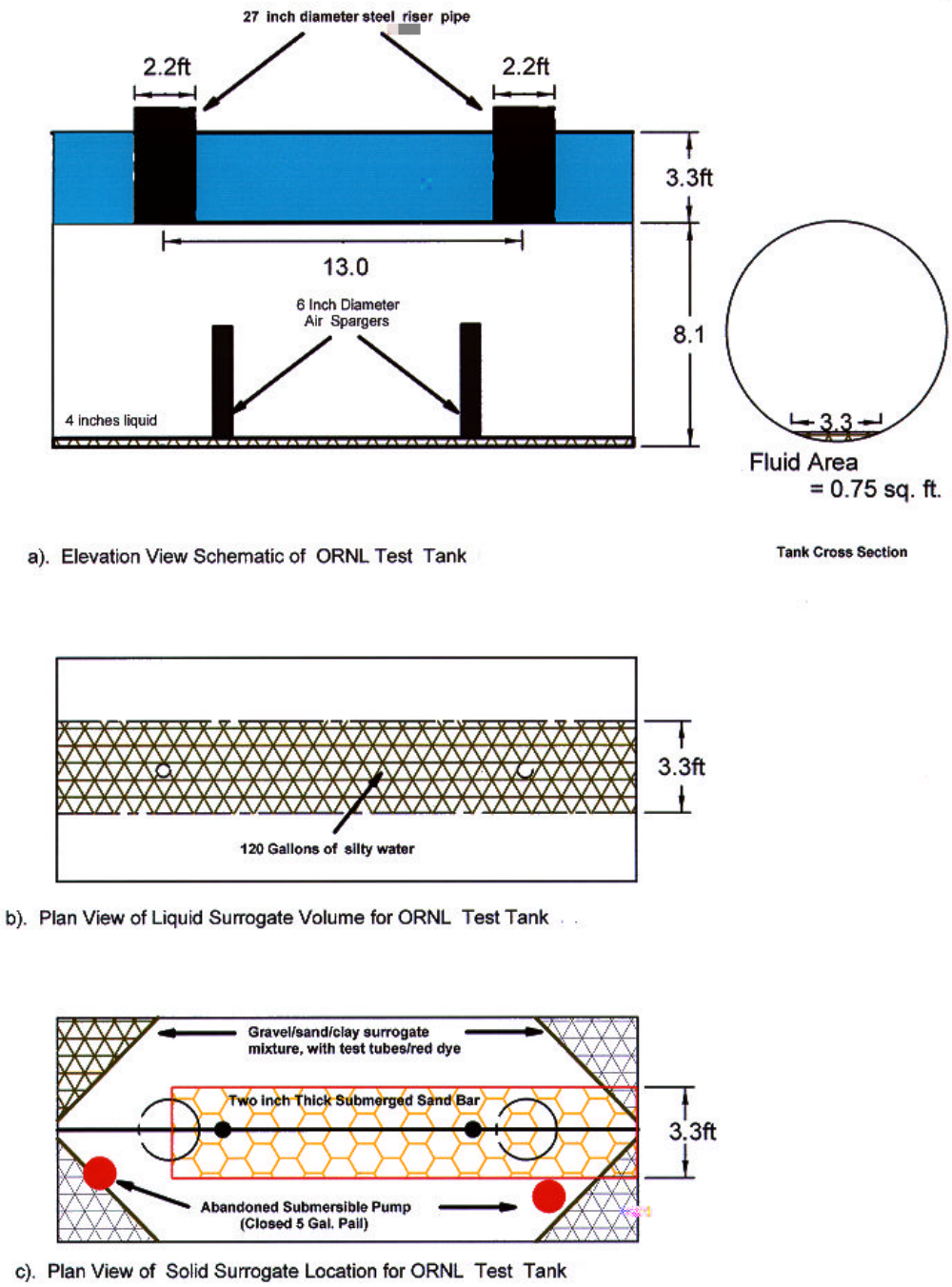

Fig. 6. Elevation and plan view of ORNL OHF test tank, illustrating the type and location of physical surrogates.

- Test tubes containing red dye were prepared and placed in the clay mounds at the corners of the tank.

- Filling 5-gal pails with sand simulated the two abandoned submersible pumps located at each end of one of the OHF tanks. The pump outlet hoses were simulated using landscape drainage pipe.

- Two 6-in.-diam simulated air sparge tubes were attached to the floor of the OHF test tank. The simulated sparge tubes were located ~7-ft from each end of the tank.

- Finally, to better quantify the mixing capabilities of the MPI process a submerged bed of sand ~4 in. thick was placed on the floor along the center of the test tank.

2.4.2 SRS Physical Surrogate

The summary data provided by SRS (see Table 2) indicated that ~180 gal of liquid remain in the bottom of OBG tank S-21. For the 8-ft-diam test tank, this corresponds to ~5.5 in. of liquid, as illustrated in Fig. 7. The width of liquid across the bottom of the tank is ~3.7 ft.

The videotape footage of tank S-21 indicated that there were several different types of solid material along the floor of the tank. These solid features were arranged in the test tank as follows:

- The end walls of the SRS test tank had heaps of a gravel-sand-clay mixture mounded against the tank walls. The components of the mixture consisted of the following:

Ball clay	145 lb
Water	70 lb
Stone	10 lb

  The Ball clay used here is the same highly plastic clay material used in the ORNL test. However, the decision was made to use a stiffer clay mix inside the SRS test tank. The stiffer clay presents a greater challenge for the MPI system to erode and mix the clay with treatment agents. The water-to-Ball clay ratio (70:145 = 48%), which was used to prepare the SRS samples, was around the liquid limit of the clay. This is the borderline between the clay behaving as a soil versus a semisolid. The measured undrained shear strength corresponding to the water content of the Ball clay was ~100 lb/ft^2.

  A total of six batches of the previous formulation were heaped against the end walls of the tank, as illustrated in Fig. 7c. A total of ~1,350 lb of cohesive surrogate were used during the SRS portion of the demonstration.

- A 4-in.-thick submerged sand bar was placed along the central axis of the tank, which was similar to that used in the ORNL test tank.

- A bundle of steel pipe was placed on the tank bottom to represent the steel pipe in some of the SRS tanks.

- A steel tape was dropped on top of the sand bar from the riser closest to the gravel-sand-clay physical surrogate. The steel tape is typical of the debris present in several of the SRS tanks.

ORNL-Dwg-2000-2807

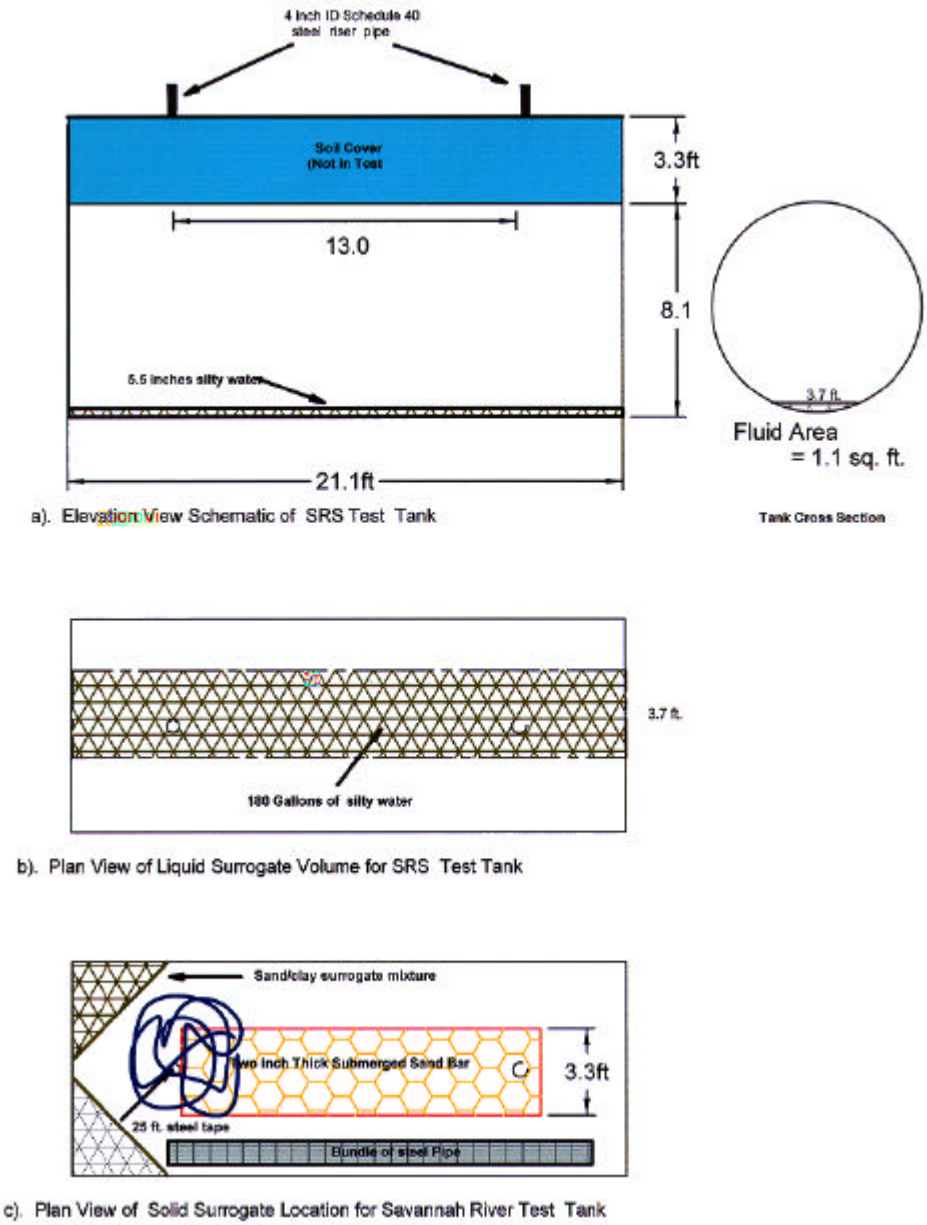

Fig. 7. Elevation and plan view of the SRS test tank, illustrating the type and location of physical surrogates.

2.5 EQUIPMENT LAYOUT

Two major equipment plants were used during the demonstration–(1) dry blend storage and grout mixing plant, and (2) high-pressure pumping units. A diagram of the equipment layout for the cold demonstration is shown in Fig. 8.

ORNL-Dwg-2000-2808

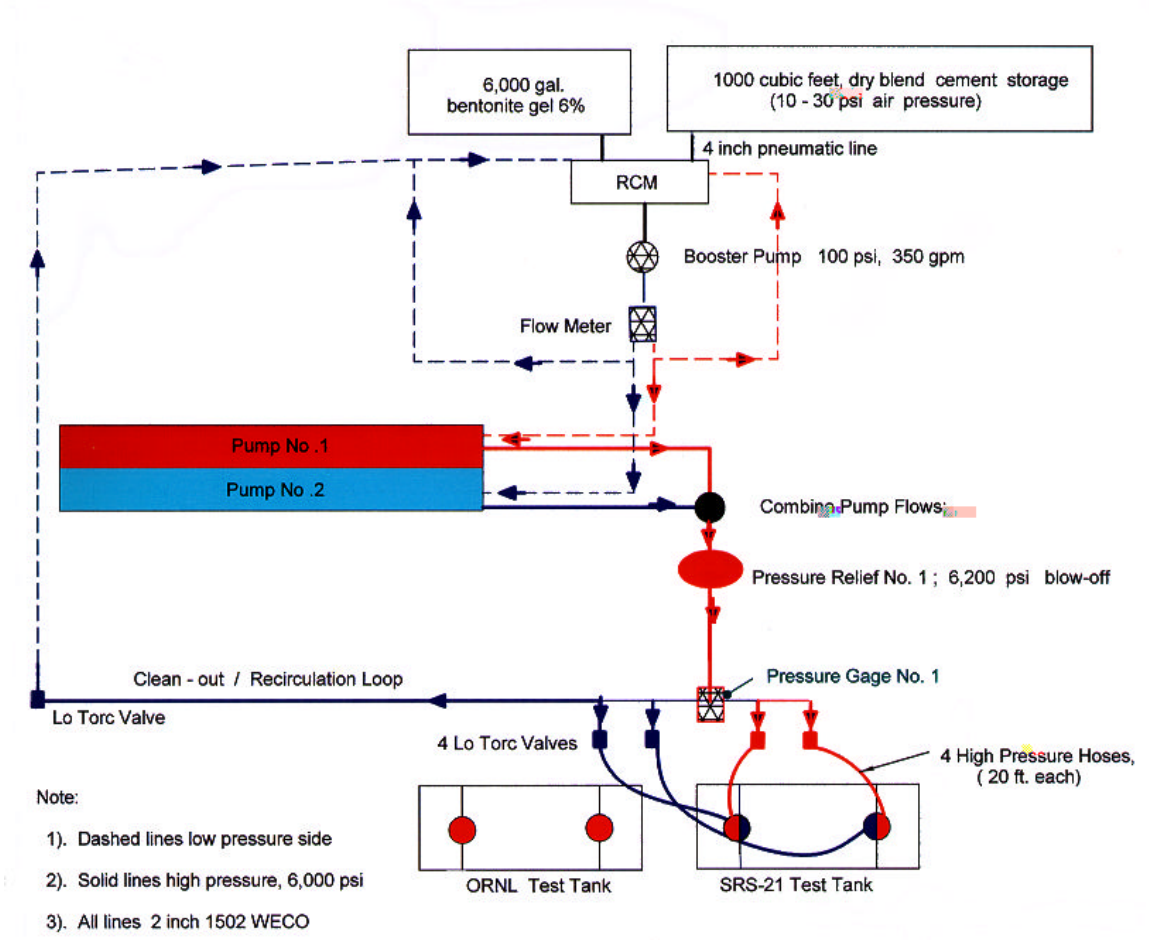

Fig. 8. Equipment layout for cold demonstration.

2.5.1 Dry Blend Storage and Grout Mixing Plant

The photograph in Fig. 9a shows a general view of the dry blend storage and grout mixing plant used during the demonstration. The equipment includes the following:

- A field bin, which held 50 tons of the ORNL dry blend.
- A water storage tank, which contained 5,000 gal of a 6% bentonite gel.
- The main grout plant, which included an oil field batch mixer capable of bulk blending ~75 bbl (3,000 gal) of grout at a single time.

The capacity of the batch mixer was an important element of the grouting plant because the 3,000-gal capacity represents ~10 min of MPI injection time. Furthermore, this volume represented the entire slug of grout injected at one time. Therefore, the grout plant did not cause any delay during the injection stage of the MPI process.

2.5.2 High-Pressure Pumps

Freemyer Enterprises supplied three triplex oil-field cementing pumps for a total of ~1,800 hp. The arrangement of the pumps can be seen in the photograph, shown as Fig. 9b. The maximum number of nozzles that were driven at any one time by these pumps was 24. When pumping the ORNL grout formulation at an injection pressure of 6,000 psi, the corresponding grout flow rate was ~400 gpm.

The high-pressure grout was pumped through a manifold, which had four 2-in valves. Each valve was attached to a high-pressure flexible hose (tested to 19,900 psi) that was connected to a MPI jetting tool located inside of a test tank. The steps followed to install the MPI tooling and general sequence of performing the injection are discussed in Sect. 2.6.

ORNL-Photo-815-2000

(a) Grout Plant

(b) High-Pressure Pump Plant

Fig. 9. Overview of equipment used during the FY 1999 MPI cold demonstration in Odessa, Texas.

2.6 INSTALLATION OF MPI TOOLS

Because of the differences in tank access constraints and tooling designs required to perform the MPI process in the ORNL and SRS tanks, the overall concept for implementation of the process will be addressed separately in Sects. 2.6.1 and 2.6.2.

2.6.1 MPI Process Inside the ORNL Test Tank

Four MPI tools were used inside the ORNL OHF test tank, as previously illustrated in Fig. 4. The plan view arrangement of the four tools (Figs. 4b and 4c), were placed to the outside of the 6-in.-diam air sparger risers, which were situated along the centerline of the OHF tanks.

The MPI injection pattern required the simultaneous activation of one tool at each end of the tank, as shown in Fig. 4b. These tools generated the jet stream pattern, which is illustrated by the vector diagram presented in the figure. The injection was performed for ~60 s. Thereafter, the second grout loop (Fig. 4c) was activated, and injection was performed in a similar manner. The entire process was repeated until ~3,000 gal of grout were injected.

There was no evidence that any MPI jet became clogged during the entire injection stage. During the FY 1998 study, about 50% of the jets became clogged. After studying the material that caused the clog, it is now believed that the major amount of clogging noted in FY 1998 was caused by erosion of the rubber hose interior. During the FY 1999 demonstration, new Rogan Shanely hoses were attached to each MPI jetting tool.

2.6.2 MPI Process Inside the SRS Test Tank

The portion of the cold demonstration to support the closure activities at the SRS placed a significant added complexity upon the allowable access into the SRS test tanks. SRS required all MPI tools to be deployed through a single ~4-in.-diam riser pipe at each end of the tank (a total of two riser pipes).

The situation for the long, horizontal SRS tanks with severe access restrictions can represent a single segment taken from a larger-diameter tank. Therefore, the activities for a single, long, horizontal tank need only to be repeated several times to cover the entire cross section of a larger-diameter cylindrical tank (i.e., 85-ft diam). A proposed strategy for using the MPI process in large-diameter cylindrical tanks is presented in a separate technical memorandum.[4] The following discussion covers the approach used during the FY 1999 SRS cold demonstration, but the approach is also a basis for deploying the MPI tools in a large-diameter tank.

The adaptation of the MPI tools to fit through a 4-in.-diam opening was accomplished by deploying the tools on very flexible high-pressure hoses with multiple short steel jetting monitors (jet holders). The simplicity of the horizontal deployment of multiple MPI tools is supported by the series of photographs, as shown in Figs. 10 and 11.

ORNL-Photo-402-2000

(a)

(b)

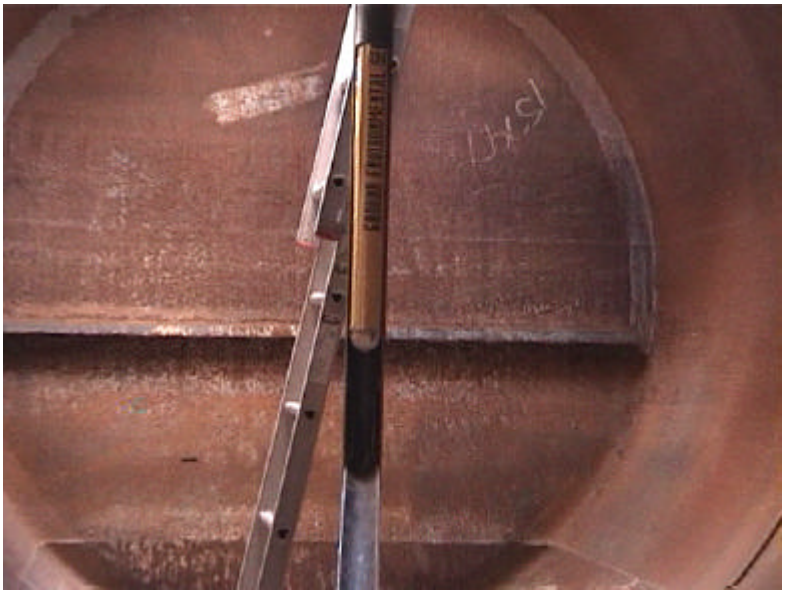

Fig. 10. Close-up photographs of MPI tool used in SRS tank during FY 1999 cold demonstration: (a) insertion into 4-in.-diam riser pipe and (b) tool being lowered through carrier casing inside SRS test tank. Note: All information in this Figure is marked as limited rights data under the terms of the subcontracts between GES and LMER. MPI is protected under U.S. Patents Nos. 5,860,907 and 5,645,377 with several other patents pending.

ORNL-Photo-403-2000

(a)

(b)

(c)

(d)

Fig. 11. Series of photographs showing MPI tools being pushed through SRS test tank: (a) MPI tool whipstock and coal chute, (b) tool being pushed along floor and passing second carrier casing, (c) tool hitting the end wall of test tank, (d) vertical tool inserted inside bottom of Lexan™ pipe and relationship to two MPI floor tools. Note: All information in this Figure is marked as limited rights data under the terms of the subcontracts between GES and LMER. MPI is protected under U.S. Patents Nos. 5,860,907 and 5,645,377 with several other patents pending.

A horizontal MPI tool is initially installed by inserting a composite steel–Lexan™ plastic carrier casing inside the 4-in.-diam-riser pipe. The photograph, as shown in Fig. 10a, reveals a 4-in.-diam tube (carrier casing) placed inside a 4-in.-diam schedule 40 piece of stainless steel pipe (see concentric pipe in lower right-hand side of the photograph). The 4-in. dimension is the measured diameter of the riser pipe on the Old Solvent Tanks at SRS. The carrier casing has a gravity-actuated "coal chute", which is machined flush with the outer wall of the carrier casing. The orientation of the coal chute is pointed in the direction in which the horizontal string of MPI tools are deployed (Fig. 10b). The open chute guides the MPI tool out of the vertical carrier casing along a very tight radius of curvature (~4 ft). As the tool is pushed out onto the coal chute, the chute provides support to the tool until the tool is nearly in a horizontal position, (Fig. 11a).

Thereafter, the tool exits off the chute and is manually pushed along the floor of the test tank, (Fig. 11b). Even though there were weld bands every 4 ft along the length of the tank, the horizontal MPI tool could be manually pushed over the weld bands and through the 4 in. of sand surrogate. Ultimately, the tool was pushed up against the back wall of the test tank (see Fig. 11c). This was ~20 ft from the point at which the carrier casing contacted the tank floor. During other phases of the cold demonstration, the multiple string of MPI tools could be manually pushed along the ground surface for a maximum distance of ~35 ft. This was the full length of the push rods attached to the tool. However, this may represent a practical maximum distance for manual installation of the string of MPI floor tools.

Once the MPI floor tools were in place, a vertical MPI tool was lowered through the annular space left inside the carrier casing. The photograph in Fig. 11d shows the vertical tool through the Lexan™ plastic at the tip of the steel carrier casing (see middle of photograph just below open coal chute). The photograph also shows the relationship between the vertical tool and two horizontal tools deployed inside the SRS tank. The vertical tool in the photograph is only 1.75-in. diam and is mounted with 10 jets. The vertical tool mobilized and mixed the cohesive surrogate (gravel-sand-clay) packed against the back wall of the test tank into the fluid grout during the jetting process.

The flow pattern developed by the interaction of the horizontal jet streams of the MPI floor tools and the vertical 1.75-in.-diam tool is illustrated by the series of photographs in Figs. 12a to 12c. The photograph in Fig. 12a is an overall view of the vertical and floor tool simultaneously operating at 6,000 psi. Note that the left side of the photograph depicts a large amount of turbulent mixing and interaction as the jets from the vertical and floor tool impact each other. Conversely, on the right side of the photograph, there are distinct horizontal jet patterns (see close-up photograph in Fig. 12b). The photograph in Fig. 12c shows the condition of the hoses and tools after ~5 min of jetting at 6,000 psi and 400 gal/min.

The coherent jet stream, which is shown in Fig. 12b, develops because there are no perturbations in the path of the jet to cause dispersion (energy loss) of the jet. When the MPI tools are operated in an actual tank, they start from a submerged condition, which is typical for a tank that contains supernatant above the actual sludge. Operating the tools from a submerged condition ensures the dispersion of the jet stream and the creation of turbulent jet mixing. The submergence also virtually ensures that no aerosols are created. This feature helps to keep all the sludge within the mixing action of the MPI jet streams.

ORNL-Photo-404-2000

(a)

(b)

(c)

Fig. 12. Series of photographs showing the MPI floor tool being activated at surface: (a) overview of turbulence created by MPI vertical and floor tools, (b) close-up of MPI floor tool, (c) tool and hose after 5 min of jetting at 400 gpm and 6,000 psi. Note: All information in this Figure is marked as limited rights data under the terms of the subcontracts between GES and LMER. MPI is protected under U.S. Patents Nos. 5,860,907 and 5,645,377 with several other patents pending.

For the cold demonstration, a total of ~3,000 gal of grout was injected into the SRS test tank. This volume of grout was sufficient to mix the sand and clay surrogate with the injected grout. During the injection, an overview camera inside of the SRS test tank allowed viewing of the MPI process. The camera view showed that the mounds of clay surrogate placed at the end wall of the test tank were broken apart and mixed with the grout from the MPI jets. The sequence of photographs shown in Fig. 13 was taken from the overview camera inside the SRS test tank during the initial stage of the grout injection process. A mound of clay surrogate is shown in the upper right quadrant of Fig. 13a. It is evident from this sequence of photographs that the turbulence from the MPI jets is capable of mixing the cohesive surrogate with the injected grout and sand surrogate in the bottom of the test tank.

There was no evidence of any MPI jet becoming clogged during any injection stage performed inside of the SRS tank. The reasons for this good performance are thought to be the same as those stated in the discussion of the injection stage performed in the ORNL tank, (see Sect. 2.6.1).

2.7 EFFECT OF JETTING DIRECTLY ON METAL WALL

The MPI process has been criticized for potentially damaging tank walls during in situ grouting operations. Therefore efforts were undertaken to dispel this criticism by demonstrating that MPI jetting directly against the thin walls of 55-gal drums would not damage them.

During the FY 1998 demonstration, no damage was observed to the steel test tank, even though 64 jet nozzles were driven at a 6,000-psi supply pressure. The jetting duration at any time was ~45 s per grout stage. During the FY 1999 demonstration, jetting tests were performed in which the MPI jets were directed at the walls of two standard 55-gal steel drums. The minimum steel thickness reported for the OHF tanks was for Tank T-9 at ORNL and was estimated to be 3/8-in. The wall thickness of a standard steel drum is significantly less than the minimum wall thickness of the tanks currently planned for hot demonstration of MPI technology. An MPI jetting tool was suspended inside the center of a 55-gal drum and operated at 6,000-psi supply pressure with ~200 gpm grout flow. A jetting time of ~2-min duration was used. The jet orientation was directly perpendicular to the drum walls and also at an oblique angle, which has been demonstrated to be more efficient for cutting 55-gal steel drums. This test allowed the operating crew to practice the MPI technique and to show that no metal cutting is possible at the pressures, flows, standoff distances, and short jetting durations used for in situ tank grouting. This test showed that the thicker tank walls in the actual waste tanks would not be harmed.

The MPI process is a controlled process that can be adjusted for different purposes, such as stabilization of shallow buried wastes, including 55-gal drums, where cutting capability may be desirable. Higher pressures (11,000 psi) with abrasive grit can be used to cut thin metal in close proximity to a directed jet. Combinations of factors pressure, distance, and jet direction are used to insure that tank walls are not damaged for in situ grouting operation in waste tanks.

The test tanks used in the FY 1999 cold demonstration have 0.25-in-thick steel walls. The MPI process was successfully performed inside the steel test tanks. The design and operation of the MPI process ensured that the tank walls would not be harmed.

ORNL-Photo-816-2000

(a)

(b)

(c)

(d)

(e)

Fig. 13. Mixing sequence for SRS cold test tank: (a) interior of test tank before start of mixing, (b)–(e) interior of the test tank over ~60-s interval of sequential mixing action (note large mass in upper right quadrant).

3. Exhumation of Grouted Monolith

The grouted monoliths in the two test tanks were allowed to cure overnight (~12 h). The mixtures inside each tank had hardened with no free water on top of the solidified masses in either the ORNL or SRS test tanks. Attempts were made the following morning to push sample tubes vertically into the monolith to obtain a vertical column of the grout-waste surrogate mixture to evaluate for the sand distribution, as was done for the Duncan, Oklahoma, demonstration in FY 1998. However, unlike the Duncan and laboratory testing, the grout set overnight and was too hard to push the sample tube completely through the monolith. Also, the technique that was developed in the laboratory and used in the Duncan testing for separating the sand-based waste surrogate from the grout depends on retaining the sand on a sieve while washing the still soft grout through the sieve. It appeared that the grout set was advanced to the point such that by the next morning the cemented grout particles would be retained with the sand and thus compromise the results of any sieving tests. The grout formulation developed for in situ grouting of these tanks is typically at a slow setting and takes a few days to set to this same state in the laboratory, which was confirmed by the cold demonstration in the Duncan test. This observation was reaffirmed the next morning by the softness of the grout samples that had been sealed in plastic containers and taken indoors. The conditions indoors were more moist and cool than for the monoliths sitting in the tanks suspended in air and open to the hot, dry summer air in Texas. The afternoon and evening sun had also shone full force on the exposed metal tanks, which likely resulted in temperatures inside the tanks approaching 120ºF or more. The relative humidity at the test site was estimated to be ~40%, or less, which would have lead to some desiccation of the monolith. In addition, the cement content of the jetting slurry was slightly higher and the sand content of the waste surrogate was significantly lower (representing tank heels for this demonstration as opposed to the 35 wt % surrogate waste loading for the Duncan demonstration) than that used in the Duncan demonstration. All of these factors contributed to making the monolith setting much quicker than anticipated. The lower sand concentration would have made the task of finding measurable sand contents significantly more challenging than in the Duncan demonstration and it likely that sieving would have produced more hard grout particles than sand.

In the absence of analytical data, visual observations of the monolith were made to assess the overall condition and characteristics of the waste form. The condition of the lower end wall of the SRS test tank can be inferred from the series of photographs, shown as Fig. 14, which reveals the drainage pipe being removed from the bottom of the tank. No water drained from this opening when the valve was removed for inspection of the tank contents. Originally, this drainpipe was covered with the clay mound heaped against the back wall of the tank. The close-up photograph (Fig. 14b) of the drain opening reveals a well-cemented hole, which is tightly grouted.

To obtain some evidence of the condition of the mixture of grout and surrogate, an electric clay spade was used to excavate samples of the grouted mass inside the tank for further visual inspection. The photograph shown in Fig. 14c is an overall view of the excavation performed inside of the tank. The excavated material shoveled against the tank sidewalls appeared to be uniformly mixed.

ORNL-Photo-817-2000

(a)

(b)

(c)

Fig. 14. Photographs showing the solidified mass after MPI injection in the SRS test tank: (a) general view of tank bottom drain, (b) close-up of grout filled drain, (c) general view of tank floor interior during sample excavation.

4. Conclusions

A cold demonstration of the MPI process was successfully performed in FY 1999 to support closure activities at ORNL for the OHF and at SRS for the ORWBG solvent tanks. A major challenge for the SRS waste tanks was treatment of in situ residual heel material contained in long, horizontal tanks (40 ft) with severely restricted access (4-in.-diam riser pipes). The challenges presented by SRS were overcome by adapting the MPI tooling so that multiple tools could be deployed along a horizontal string.

The tests described in this report show that the MPI process can be successfully used to form monoliths in long horizontal tanks with limited access. Since this situation is analogous to a segment of a large circular tank, the activities demonstrated for the SRS tanks in FY 1999 need only to be repeated several times to cover the floor of an 85-ft-diam tank.

All injection activities were conducted from a remote location with all workers and capital equipment at least 100 ft away from the test tank. The demonstration showed that the MPI process provides superior health and safety protection to workers and capital equipment.

Jet cutting tests were performed during which the MPI jets were directed at the walls of two standard 55-gal steel drums. The wall thickness of a standard steel drum is significantly less than the minimum wall thickness of the waste tanks scheduled for hot deployment of the technology. This test allowed the operating crew to practice the MPI technique and showed that metal cutting is not possible at the pressures, flows, and distances used for in situ tank grouting.

The demonstration also showed that improved sampling techniques and/or modified analysis procedures are needed for grouting operations in hot dry climates.

5. References

1 J. L. Kauschinger, R. D. Spence, and B. E. Lewis, *In-situ Grouting Technology Demonstration and Field Specifications Overview for Hot Deployment of the Multi-Point Injection System in Gunite and Associated Tank TH-4*, ORNL/TM-13710, Lockheed Martin Energy Research Corporation, Oak Ridge National Laboratory, Oak Ridge, Tennessee, October 1998.

2 J. A. Bamberger and G. F. Boris, *Oak Ridge National Laboratory Old Hydrofracture Facility Waste Remediation Using the Borehole-Miner Extendible-Nozzle Sluicer*, PNNL-12225, Pacific Northwest National Laboratory, Richland, Washington, June 1999.

3 A. Preston, *Technical Report on the Old Solvent Tanks Video Survey Summary*, WSRC-RP-98-04225, Westinghouse Savannah River Company, Aiken, South Carolina, December 1998.

4 J. L. Kauschinger and B. E. Lewis, *Utilization of the MPI™ Process for In-Tank Solidification of Heel Material in Large-Diameter Cylindrical Tanks*, ORNL/TM-2000/8, Lockheed Martin Energy Research Corp., Oak Ridge National Laboratory, Oak Ridge, Tennessee, January 2000.

INTERNAL DISTRIBUTION

1. J. B. Chesser
2. J. N. Herndon—Record Copy
3-5. B. E. Lewis
6. ORNL Central Research Library
7. ORNL Laboratory Records
8. K. E. Plummer
9. R. D. Spence
10. S. D. Van Hoesen

EXTERNAL DISTRIBUTION

11. G. F. Boris, Bechtel Jacobs Company, P. O. Box 2008, MS 6402, Oak Ridge, TN 37831-6402
12. D. H. Bolling, Bechtel Jacobs Company, P. O. Box 2008, MS 6402, Oak Ridge, TN 37831-6402
13. L. D. Bustard, Sandia National Laboratory, P. O. Box 5800, MS 0728, Albuquerque, NM 87185-5800
14. J. L. Kauschinger, Ground Environmental Services, 200 Berry Glen Court, Alpharetta, Georgia 30202
15. J. R. Noble-Dial, U.S. Department of Energy, Oak Ridge Operations Office, P. O. Box 2009, Oak Ridge, TN 37831
16. Office of Scientific and Technical Information, DOE Oak Ridge Field Office, P. O. Box 62, Oak Ridge, TN 37831
17. T. P. Pietrok, U.S. Department of Energy, Richland Operations Office, P. O. Box 550, MS K8-50, Richland, WA 99352
18. M. L. Whitehead, Bechtel Jacobs Company, P. O. Box 2008, MS 6402, Oak Ridge, TN 37831-6402

19-26. B. J. Williams, Pacific Northwest National Laboratory, P. O. Box 999, MSIN K9-69, Richland, WA 99352