S

ENGINEERING CHANGE NOTICE

Page 1 of 5

1. ECN 710030

Proj. ECN

2. ECN Category (mark one)	3. Originator's Name, Organization, MSIN, and Telephone No.	4. USQ Required?	5. Date
Supplemental ☐ Direct Revision ■ Change ECN ☐ Temporary ☐ Standby ☐ Supersedure ☐ Cancel/Void ☐	PR HIRZEL / 15530 / T5-55 / 373-4121	■ Yes ☐ No	2/15/2000
	6. Project Title/No./Work Order No. WASTE ANALYSIS PLAN for 241-Z / 110793	7. Bldg./Sys./Fac. No. 241-Z / 72P	8. Approval Designator Q E
	9. Document Numbers Changed by this ECN (includes sheet no. and rev.) ~~HNF~~ WHC-SD-CP-EV-012, Rev. 0 dp for SDZH 4/21/00	10. Related ECN No(s). N/A	11. Related PO No. N/A

12a. Modification Work	12b. Work Package No.	12c. Modification Work Completed	12d. Restored to Original Condition (Temp. or Standby ECNs only)
☐ Yes (fill out Blk. 12b) ■ No (NA Blks. 12b, 12c, 12d)	N/A	N/A Design Authority/Cog. Engineer Signature & Date	N/A Design Authority/Cog. Engineer Signature & Date

13a. Description of Change

13b. Design Baseline Document? ■ Yes ☐ No

REPLACE WAP Rev. 0 with attached document.

The document was completely revised to incorporate changes to the waste acceptance criteria, process descriptions, and sampling parameters. Previous waste stream characterization data were deleted as obsolete.

14a. Justification (mark one)	14b. Justification Details
Criteria Change ■ Design Improvement ☐ Environmental ☐ Facility Deactivation ☐ As-Found ☐ Facilitate Const. ☐ Const. Error/Omission ☐ Design Error/Omission ☐	The WAP for 241-Z was revised to incorporate upto date facility, process, and waste descriptions, as well as information requested by Tank Farms DST WAP.

15. Distribution (include name, MSIN, and no. of copies)

See attached distribution sheet.

RELEASE STAMP

APR 21 2000
DATE:
STA: 5
HANFORD RELEASE
ID: 12

A-7900-013 (05/96)

ENGINEERING CHANGE NOTICE

1. ECN (use no. from pg. 1): 710030

16. Design Verification Required	17. Cost Impact				18. Schedule Impact (days)	
	ENGINEERING		CONSTRUCTION			
☐ Yes	Additional ☐	$ N/A	Additional ☐	$ N/A	Improvement ☐	N/A
■ No	Savings ☐	$	Savings ☐	$	Delay ☐	

19. Change Impact Review: Indicate the related documents (other than the engineering documents identified on Side 1) that will be affected by the change described in Block 13. Enter the affected document number in Block 20.

SDD/DD	☐	Seismic/Stress Analysis	☐	Tank Calibration Manual	☐
Functional Design Criteria	☐	Stress/Design Report	☐	Health Physics Procedure	☐
Operating Specification	☐	Interface Control Drawing	☐	Spares Multiple Unit Listing	☐
Criticality Specification	☐	Calibration Procedure	☐	Test Procedures/Specification	☐
Conceptual Design Report	☐	Installation Procedure	☐	Component Index	☐
Equipment Spec.	☐	Maintenance Procedure	☐	ASME Coded Item	☐
Const. Spec.	☐	Engineering Procedure	☐	Human Factor Consideration	☐
Procurement Spec.	☐	Operating Instruction	☐	Computer Software	☐
Vendor Information	☐	Operating Procedure	☐	Electric Circuit Schedule	☐
OM Manual	☐	Operational Safety Requirement	☐	ICRS Procedure	☐
FSAR/SAR	☐	IEFD Drawing	☐	Process Control Manual/Plan	☐
Safety Equipment List	☐	Cell Arrangement Drawing	☐	Process Flow Chart	☐
Radiation Work Permit	☐	Essential Material Specification	☐	Purchase Requisition	☐
Environmental Impact Statement	☐	Fac. Proc. Samp. Schedule	■	Tickler File	☐
Environmental Report	☐	Inspection Plan	☐		☐
Environmental Permit	☐	Inventory Adjustment Request	☐		☐

20. Other Affected Documents: (NOTE: Documents listed below will not be revised by this ECN.) Signatures below indicate that the signing organization has been notified of other affected documents listed below.

Document Number/Revision	Document Number/Revision	Document Number/Revision
FSS-Z-080-00017, A-0		

21. Approvals

	Signature	Date		Signature	Date
Design Authority	[illegible]	2/15/2000	Design Agent		
Cog. Eng.			PE		
Cog. Mgr.	R.A. Burk [illegible]	4/17/00	QA		
QA	DR Groth	4-18-00	Safety		
Safety			Design		
Environ.	J Brown	29 Mar 2000	Environ.		
Other			Other		

DEPARTMENT OF ENERGY

Signature or a Control Number that tracks the Approval Signature

ADDITIONAL

DESCRIPTION

The 241-Z Waste Analysis Plan was 7 years out of date and revised to reflect the PFP's current condition.

INTRODUCTION

The 241-Z waste tanks are used to store, treat, and transfer waste to Tank Farms. The sampling requirements are established to identify the composition of the tank waste. The primary goal is to meet the Tank Farms acceptance criteria. Tank Farms will not accept waste without extensive characterization sample data. Process and lab wastes are sampled for suitability prior to routing to Tk-D8. The samples are helpful in tracking the amount of chemical constituents to determine treatment and are required to maintain Pu inventory and criticality prevention limitations. Likewise, the waste is sampled prior to inter-tank transfers.

The revised Waste Analysis Plan for 241-Z (WAP) contains current facility, process and waste descriptions. The WAP lists the Double Shell Tank (DST) system acceptance criteria, sampling parameters and required analyses. The characterization data on historical process wastes was deleted. A section on the Tank Farms waste approval procedural process was added to describe the steps necessary and documentation required to transfer waste to the DST system.

Failure to collect proper samples will result in Tank Farms' refusal to accept PFP waste until proper sampling conditions are met. This will use up unnecessary time and resources but not place the plant in a hazardous position.

SCOPE

This USQ evaluation covers the 241-Z facility and the waste it receives. The sampling requirements are based on Tank Farm acceptance criteria.

AUTHORIZATION BASIS

The Authorization Basis documents for the PFP are identified in FSP-PFP-5-8, Section 2.23, "Identification and Resolution of Unreviewed Safety Questions", Appendix A. Portions of the Authorization Basis directly applicable to the procedure being changed are:

The authorization basis documents reviewed included those listed in FSP-PFP-5-8, Section 2.23, Appendix A. These are:

HNF-SD-CP-SAR-021 Revision 1
HNF-SD-CP-OSR-010, Revision 0-L

CONCLUSION

The WAP was revised so the facility, process and waste descriptions would match the current authorization basis. The WAP revision does not require a USQ evaluation or decrease the safety posture of the 241-Z facility. All changes are within the authorization basis.

REFERENCES

OSD-Z-184-00010, Operating Specification for the 241-Z Waste Facility
HNF-SD-WM-EV-053, "DST system Waste Analysis Plan"

QUESTIONS

1.Does the proposed change or occurrence represent a change to the facility or procedures as described in the Authorization Basis?
[] N/A [X] No [] Yes/Maybe

BASIS: The facility, process and waste stream descriptions in the WAP were revised to match the current state of the PFP as described in the authorization basis (sect 5.2.4.2, 5.4.9.3, 7.2.2.1, 7.2.3.1, and associated tables and figures). Sampling is mentioned in section 7.2.2.1, but not to the detail covered in the WAP.

2.Does the proposed change or occurrence represent conditions that have not been analyzed in the Authorization Basis?
[] N/A [X] No [] Yes/Maybe

BASIS: Sampling of the 241-Z waste tanks has been analyzed. Table 9A.4, item 4 lists possible system hazards for "failure to collect a representative sample" and "failure to safely obtain a sample." The WAP does not alter the plant configuration, but updates the sampling activity descriptions to match the plant configuration. This does not affect the Authorization Basis.

3.Does the proposed change represent a test or experiment NOT described in the Authorization Basis that may affect the safe operation of the facility?
[X] N/A [] No [] Yes/Maybe

BASIS: N/A

UNREVIEWED SAFETY QUESTION (USQ) SCREENING AND EVALUATION

ECN 710030

1. Identification Number: HNF-SD-CP-EV-012, A-1	USQ SCREENING	Page 5 of 5

2. Title: Waste Analysis Plan for 241-Z

4.Does the proposed change or occurrence represent a change to the Technical Safety Requirements or a reduction in the margin of safety defined in the Technical Safety Requirements?

[] N/A [X] No [] Yes/Maybe

BASIS: No new or revised Technical Safety Requirements are necessary for the changes to the 241-Z OSD. No OSRs or LCOs are affected.

USQE #1 DR Hirzel

(Print Name)

Signature Date: Mar 28 2000

USQE #2 JE Bramson

(Print Name)

Signature Date: 29 Mar 2000

If there is a YES/MAYBE response to questions 1, 2, 3, or 4, then a USQ Evaluation must be completed.
The following guidance should be considered when completing this screening. This guidance should not be considered all-inclusive; additional factors may need to be considered depending on the nature of the proposed change.
Does the proposed change:

1) Modify, add, or delete a safety class function of a structure, system or component stated in the authorization basis?
2) Alter the design of a structure, system or component as described in the authorization basis?
3) Modify, add, or delete the description of operation, operating environment, or analyses of any system or component described in the authorization basis?
4) Modify, add, delete or conflict with any of the design bases stated in the authorization basis?
5) Conflict with the principle or general design criteria stated in the authorization basis?
6) Modify, add, or delete any plant design features described in the authorization basis?
7) Modify, add, or delete a flow diagram or facility drawing provided in the authorization basis?
8) Create the potential for new system or component interactions (e.g., seismic, electrical breaker coordination)?

HNF-SD-CP-EV-012
Revision 1

Waste Analysis Plan for 241-Z

Prepared for the U.S. Department of Energy
Assistant Secretary for Environmental Management

Project Hanford Management Contractor for the
U.S. Department of Energy under Contract DE-AC06-96RL13200

Fluor Hanford
P.O. Box 1000
Richland, Washington

Approved for public release; further dissemination unlimited

HNF-SD-CP-EV-012
Revision 1
ECN ECN-710030

Waste Analysis Plan for 241-Z

DR Hirzel
Fluor Hanford

Date Published
April 2000

Prepared for the U.S. Department of Energy
Assistant Secretary for Environmental Management

Project Hanford Management Contractor for the
U.S. Department of Energy under Contract DE-AC06-96RL13200

Fluor Hanford
P.O. Box 1000
Richland, Washington

APR 21 2000
DATE:
STA: 5
HANFORD RELEASE
12
ID:

Release Approval — Date 4/19/00

Release Stamp

Approved for public release; further dissemination unlimited

LEGAL DISCLAIMER

This report was prepared as an account of work sponsored by an agency of the United States Government. Neither the United States Government nor any agency thereof, nor any of their employees, nor any of their contractors, subcontractors or their employees, makes any warranty, express or implied, or assumes any legal liability or responsibility for the accuracy, completeness, or any third party's use or the results of such use of any information, apparatus, product, or process disclosed, or represents that its use would not infringe privately owned rights. Reference herein to any specific commercial product, process, or service by trade name, trademark, manufacturer, or otherwise, does not necessarily constitute or imply its endorsement, recommendation, or favoring by the United States Government or any agency thereof or its contractors or subcontractors. The views and opinions of authors expressed herein do not necessarily state or reflect those of the United States Government or any agency thereof.

This report has been reproduced from the best available copy.

Printed in the United States of America

Total Pages: 28

RECORD OF REVISION	(1) Document Number HNF-SD-CP-EV-012	Page 1

(2) Title
WASTE ANALYSIS PLAN FOR 241-Z

Change Control Record

(3) Revision	(4) Description of Change – Replace, Add, and Delete Pages	Authorized for Release	
		(5) Cog. Engr.	(6) Cog. Mgr. Date
0	Initial release	EJ Manthos	LA Garner 9/21/92
RS 1	Complete revision of document per ECN-710030	DR Hirzel	RA Burk 4/21/00

A-7320-005 (10/97)

TABLE OF CONTENTS

1.0 INTRODUCTION 2
1.1 PURPOSE 2
1.2 SCOPE 2
2.0 UNIT DESCRIPTION 3
2.1 LIQUID WASTE FACILITY OVERVIEW 3
2.2 TYPES OF WASTE 5
2.2.1 Vertical Denitration Calciner 5
2.2.2 PPSL and Analytical Laboratories 5
2.2.3 Historical Waste Streams 5
2.3 WASTE ACCEPTANCE CRITERIA 6
2.4 WASTE TRANSFER REQUIREMENTS 7
2.4.1 Waste Stream Profile Sheet 11
2.4.2 List of Applicable Waste Numbers 12
2.4.3 Certification that Waste Conforms to Waste Stream Profile Sheet 12
2.4.4 Certification Regarding Land Disposal Restrictions Applicability 13
2.4.5 Waste Transfer Documentation 13
2.4.6 Waste Compatibility 13
2.4.7 Double-Shell Tank Customer's Waste Analysis Documentation on File 14
2.4.8 Verification of Waste Composition 14
3.0 WASTE ANALYSIS PARAMETERS 15
3.1 INFORMATION NEEDED 15
3.1.1 Waste Identification 15
3.1.2 Identification of Incompatible Wastes 17
3.1.3 DST Operational Parameters 17
3.2 PFP WASTE CHARACTERIZATION 17
4.0 SAMPLING METHOD 19
4.1 SAMPLING STRATEGY 19
4.2 SAMPLING EQUIPMENT 19
4.3 SAMPLE MANAGEMENT 19
5.0 ANALYTICAL METHODS 22
6.0 QUALITY ASSURANCE/QUALITY CONTROL PROCEDURES 23
7.0 RECORD KEEPING 24
LIST OF DOCUMENTS 25

FIGURE 1 Aerial View of Plutonium Finishing Plant 4
FIGURE 2 Transfer Map 4

TABLE 2-1 Waste Acceptance Criteria 6
TABLE 2-2 Summary of Waste Stream Approval Process 8
TABLE 2-3 Information Required Before Waste Acceptance Approval 9
TABLE 2-4 Information Required Before Waste Transfers to the DST system 11
TABLE 3-1 Required analytes and lab 16
TABLE 3-2 Process Knowledge 16
TABLE 4-1 Sampling Matrix 21

1.0 INTRODUCTION

Liquid waste from the Plutonium Finishing Plant (PFP) is transferred to the 241-Z tanks for treatment prior to transfer to the double-shell tank (DST) system via tank 244-TX. The 241-Z facility is a permitted Treatment, Storage, and Disposal Facility under a Type A permit application from Washington State Department of Ecology (WDOE). This document describes the wastes treated in D-5 and their sources. The plan also describes the methods used to sample and analyze waste streams before and after treatment in Tank D-5. This document should be revised every 5 years at a minimum.

1.1 PURPOSE

This waste analysis plan (WAP) establishes requirements for dangerous waste sampling and analyses and to operate the 241-Z liquid waste facility in compliance with regulatory requirements. Regulatory, safety, and operational issues are addressed by establishing waste acceptance and storage criteria.

This document meets the intent of the requirements of Washington Administrative Code (WAC) 173-303-300 and 40 CFR 265. These regulations require that measures be taken to ensure wastes are safely handled and treated and to provide Tank Farms with information needed to properly manage the waste.

1.2 SCOPE

This document applies only to aqueous waste streams produced within the PFP complex for storage and treatment at the 241-Z liquid waste facility. The document covers transfers from the PFP to the DST systems.

2.0 UNIT DESCRIPTION

2.1 LIQUID WASTE FACILITY OVERVIEW

Operations conducted at PFP are primarily plutonium stabilization for extended storage. The scrap from past metal production campaigns is treated by various processes to produce stable oxides for long-term storage. Solutions and reactive scrap is received as feed and is converted to plutonium oxide. Figure 1 is an aerial view of the buildings in the PFP complex. The 234-5Z building houses the Remote Mechanical C Line (RMC), the Analytical Laboratory, and the Plutonium Process Support Laboratory (PPSL). Most of the PFP's waste transferred to the DST system originates from this building.

Wastes from processing and support activities are temporarily stored at 241-Z and treated before shipment. There are four active waste tanks in the building. Tanks D-5 and D-8 each have a normal operating volume limited to 12000 liters. Numerous smaller batches of waste are accumulated in Tank D-8. When the batch volume reaches 6000 to 10000 liters, depending on composition, it is transferred to Tank D-5 for treatment. Treatment consists of adding sodium nitrite, ferric nitrate, and sodium hydroxide to the waste so DST acceptance criteria are met. Following treatment, characterization sampling, and acceptance, the aqueous wastes are transferred to the DST system. Tanks D-4 and D-7 are for auxiliary storage. Figure 2 shows the 241-Z waste tanks and their stream flows.

FIGURE 1

Aerial View of the Plutonium Finishing Plant

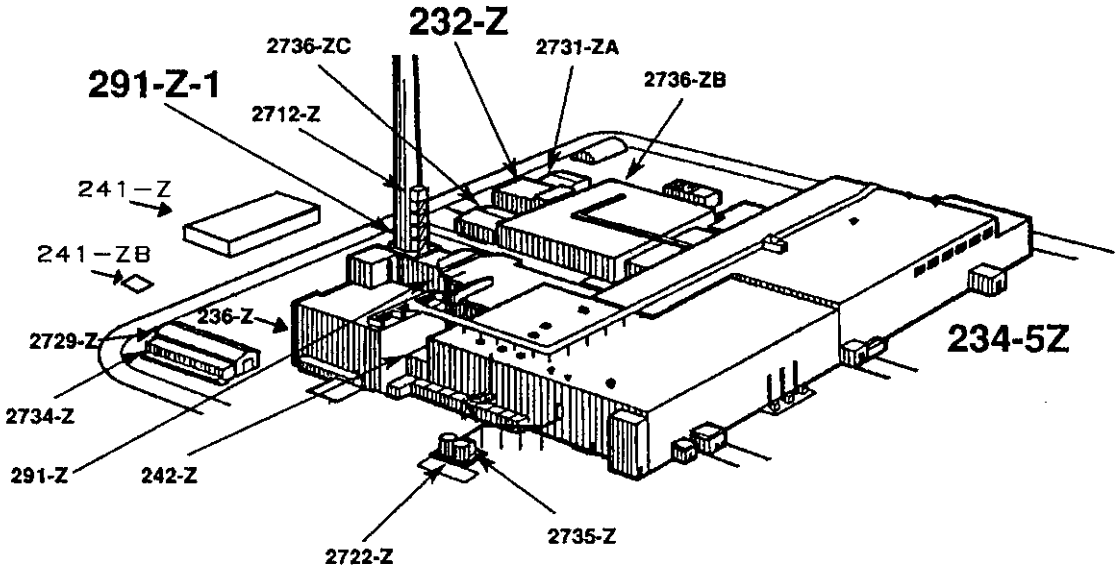

FIGURE 2 – Transfer Map

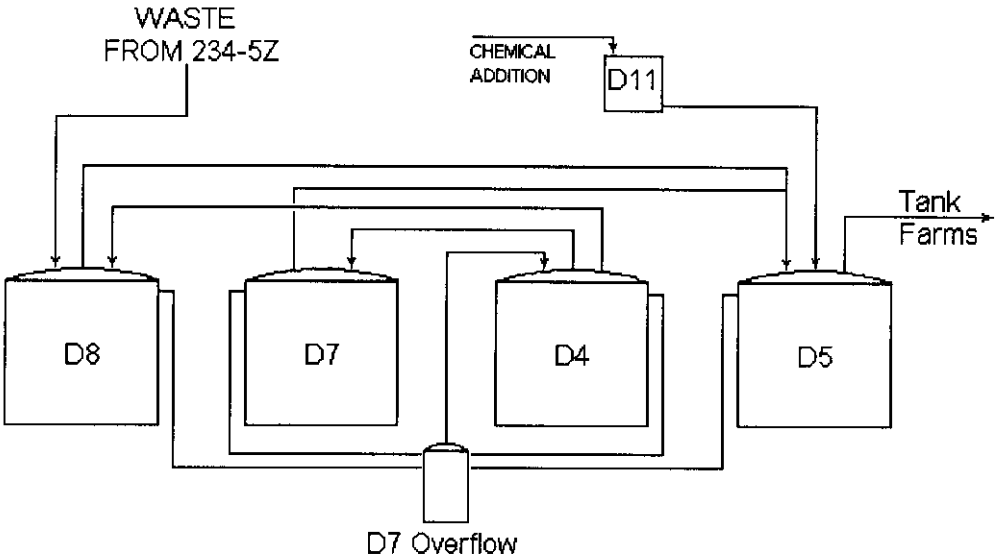

2.2 TYPES OF WASTE

2.2.1 Vertical Denitration Calciner

The Vertical Denitration Calciner (VDC) converts plutonium bearing solutions into solid PuO. The wastes consist of off gases reacted with potassium hydroxide from the off gas scrubber. The waste is corrosive and contains nitrates, nitrites, some non-toxic metals, and trace amounts of plutonium and americium.

2.2.2 PPSL and Analytical Laboratories

This stream consists of varying lab wastes, spent or out of date standards and reagents, and miscellaneous aqueous solutions from the PFP complex. Waste may contain trace amounts of plutonium, nitric acid, sodium, nitrite, iron and chloride.

2.2.3 Historical Waste Streams

Both the Plutonium Reclamation Facility (PRF) and the RMC line are inactive, but some wastes may be generated during the terminal clean out of these processes. Waste streams from the PRF and RMC line were categorized as either High Salt Waste (HSW) or Low Salt Waste (LSW). The PRF produced three notable HSW streams: CAW, CUU, and CXP.

The aqueous CAW waste stream from the CA column was acidic, not well characterized, and was responsible for many waste constituents. Carbon tetrachloride was the carrier of the solvent used in the PRF CA extraction column. Tributyl phosphate is the extractive solvent used in the PRF CA column. Degradation products of tributyl phosphate also appear in the CAW. Americium, plutonium, and uranium, which are present in the feed materials, become dispersed in the organic tributyl phosphate/carbon tetrachloride phase during extraction in the PRF process.

The CUU waste stream was an aqueous solution generated during the organic ($CCl4$/TBP) cleanup process. The CUU contained most of the constituents of CAW. It contained trace fluoride and chloride and about 20 milligrams per liter of uranium.

The CXP waste stream was an aqueous solution generated during the organic phase cleanup process. The CXP was basic, due to carbonate solution that contained high levels of the degradation products of tributyl phosphate, such as sodium dibutyl phosphate. CXP also contained most of the constituents of CAW.

The PRF low salt waste flowed continuously to 241-Z during PRF operations. Filtrate concentrator distillate normally contained nitric acid and trace amounts of plutonium but could also contain small concentrations of fluoride and chloride. Steam condensate from the filtrate and product evaporators was normally water and scale inhibitor but would have high plutonium levels if the evaporator vessel were to fail.

contained unreacted potassium hydroxide and potassium fluoride. The RMC low salt stream was generated by the filtrate evaporator and was of larger volume and lower acidity for RMC operation than for PRF operation.

2.3 WASTE ACCEPTANCE CRITERIA

The acceptance criteria set by Tank Farm Process Engineering (TFPE) for the DST system are incorporated into the Operating Specification Document for 241-Z Waste Facility, OSD-Z-184-00010. The acceptance criteria are summarized in Table 2.1. The criteria numbers refer to the appropriate section of the OSD.

Table 2-1 Waste Acceptance Criteria

OSD section	Variable	Limit
10.2.1	Pu concentration of solutions transferred to 244-TX	<0.125g/gal (0.033g/l) Pu
10.2.2	Solids content of solutions transferred to 244-TX	between 0.7 ~ 5% by volume
10.2.3	Fe/Pu ratio of solution transferred to 244-TX	over 160 to 1 mass ratio
10.2.4	Nitrate/Hydroxide/Nitrite concentration requirements for solutions transferred to 244-TX	IF [NO3-] ≤ 1.0M then 0.01M ≤ [OH-] ≤ 8.0M and 0.011M ≤ [NO2-] ≤ 5.5M and [NO3-]/([OH-]+[NO2-]) < 2.5 IF 1.0M < [NO3-] ≤ 3.0M then (0.1)[NO3-] ≤ [OH] < 10M and [OH]+[NO2-] ≥ 0.40[NO3-] IF [NO3-] > 3.0M then 0.3M ≤ [OH] < 10M and [OH] + [NO2-] ≥ 1.2M and [NO3-] ≤ 5.5M
10.2.7	pH of solutions transferred to 244-TX	pH ≥ 8
10.5.2	Organic in transfers to 241-Z	No separable organic phase in liquid to be transferred.

2.4 WASTE TRANSFER REQUIREMENTS

All waste transfers to the DST system must meet the waste acceptance criteria. The waste acceptance approval process requires an evaluation of the waste stream based on information contained in the waste stream profile sheet (WSPS). Table 2.2 summarizes the steps of the approval process.

Table 2-3 outlines the information required for the evaluation and acceptance of waste streams. The topics of Sections 2.4.1 to 2.4.7 correspond to the rows in the information requirement column and explain these requirements in greater detail. The TWRS organization may require the submittal of additional information to address regulatory and operational concerns. The WSPS provides a method for ensuring that receipt of the waste will not conflict with regulatory and safety issues. Although the approval of the WSPS does not authorize or approve waste transfer, it does provide approval for the waste stream to be accepted into the DST system.

Approval for actual waste transfer is given after completion and approval of transfer specific information and documentation summarized in Table 2-4. Requirements for each transfer include but are not limited to:

1) all analytical data listed as required with the approval of the WSPS,
2) treatment of waste to meet DST corrosion specifications,
3) certification that waste conforms to the information on the approved WSPS,
4) verification (see Section 6.0) that the waste shipment matches the information on the WSPS.

Table 2-2 Summary of Waste Stream Approval Process

Step	Action
1	DST customer submits a completed WSPS and Operational Parameter Sheet to the DST system contractor.
2	The DST system contractor evaluates the waste for conformance to safety, regulatory, and operational considerations, and notifies DST customer of the decision. If the waste acceptance is conditional, the stated additional requirements must be met before final waste acceptance and waste transfer.
3	The DST customer submits required additional information.
4	The DST system contractor conducts a compatibility assessment based on the information submitted by the DST customer.
5	The DST system contractor determines the acceptability of waste for transfer and notifies the DST customer of the decision about accepting the waste.
6	The DST customer receives notification of waste acceptability and meets any waste acceptance conditions. This is documented by issuance of a compatibility assessment that recommends receipt of the waste.
7	The DST customer schedules the waste transfer with the DST system contractor.

Table 2-3 Information Required Before Waste Acceptance Approval

Information Requirement	Regulatory Requirement	Rationale
Waste stream profile sheet. The DST customer completes the WSPS with sufficient analytical information and relevant historical data and background information on waste contents.	WAC 173-303-300 (2) WAC 173-303-380 (1)(a) and (2)	Information required to determine suitability of waste to storage in the DST system. Information will be used to evaluate the waste for safety, regulatory, and operational considerations.
Waste numbers. The DST customer lists the applicable dangerous waste numbers	WAC 173-303-070 WAC 173-303-380 (2)(a)	The DST system can only legally accept waste with the waste numbers listed in its current Part A, Form 3, Dangerous Waste Permit Application (Wisness 1994).
Certification. The DST customer provides certification that waste conforms to the information contained in the WSPS.	WAC 173-303-300 (5)	Verifies that waste characteristics have not changed from those evaluated during the waste stream approval process.
Land Disposal Restrictions applicability. The DST customer provides information contained in a notice and/or certification on applicability of LDRs.	40 CFR 268.7(a) WAC 173-303-140 WAC 173-303-380(1)(o)	Tracks applicability of LDR requirements.
Waste transfer documentation. The DST customer provides appropriate waste transfer documentation in waste manifests or transfer data sheets that include: • Waste description • Identifying the generator of the waste • Date(s) of transfer • Authorizing signature for transfer • Volume of transfer including flush volumes • Volume of waste received at the	WAC 173-303-380 (1)(a) WAC 173-303-380 (2)(b)	Verifies identity of waste as a last check before actual receipt of waste.

Table 2-3 Information Required Before Waste Acceptance Approval

Information Requirement	Regulatory Requirement	Rationale
DST system • Material balances • Applicable dangerous waste numbers and LDRs.		
Waste compatibility. TWRS performs a waste compatibility assessment.	WAC 173-303-395	Helps prevent compatibility problems associated with mixing wastes that could react with each other.
WAP or Sampling Analysis Plan (SAP) on file. The DST customer provides current WAP or equivalent sampling plan and ensures it is on file with DST system personnel.	WAC 173-303-300 (5)(e) WAC 173-303-200(1)(f) WAC 173-303-802(5)	Evaluates the acceptability of the data furnished by the DST customer.
Verification of waste composition. The DST customer provides verification (see Section 5.0) that the waste composition matches the information contained on the WSPS.	WAC 173-303-300 (5)(d)	Ensures the WSPS accurately represents the waste being shipped.

Table 2-4 Information Required Before Waste Transfers to the DST system

Information Requirement	Regulatory Requirement	Rationale
Waste compatibility assessment by DST contractor as required by safety-based DQOs.	WAC 173-303-395	Helps prevent compatibility problems associated with mixing wastes that could react with each other.
Appropriate waste transfer documentation in waste manifests or transfer data sheets that include information such as: Tanks involved with the transfer Date(s) of transfer Signature authorization for transfer Expected volume of transfer including flush volumes Material balances Change in applicable dangerous waste numbers and LDR requirements Any verification specified in Section 6.0 of this document or which was specified in the approval of the waste stream.	WAC 173-303-380 (1) and (2)	Verifies the identity of the waste as a last check before actual receipt of waste.

2.4.1 Waste Stream Profile Sheet.

A WSPS is prepared as part of the pre-approval process for waste transfer. The DST system personnel use the information in the WSPSs to evaluate safety, programmatic, and operational acceptability and to document information needed to meet regulatory requirements. The WSPSs are required for each waste stream even for a single waste transfer.

The WSPSs are completed by performing a detailed chemical and physical analysis (as defined by WAC 173-303-300 (2)) on a representative waste sample and by applying existing knowledge to the same or similar waste. The latter type of information is referred to as process knowledge and must be documented as specified in the WSPS instructions. The DST customer has the responsibility of ensuring that information used to complete the WSPS represents the waste to be shipped, that analyses are according to the sampling and analysis plan which is submitted as part of the approval process, and that only representative samples are taken.

The WSPSs expire one year from the date of approval. Approval is obtained by issuing a compatibility assessment, which recommends and/or approves the waste transfer. The date on which the compatibility assessment is issued determines the approval date.

Continuing waste transfers must have the WSPS renewed or resubmitted annually. With each waste shipment, the DST customer must provide a written certification that the composition of the waste matches the information on the WSPS. The certification is to be submitted on forms supplied by TWRS personnel. If a WSPS has not been approved or the certification has not been received by the TWRS organization, the waste cannot be accepted into the DST system.

The regulatory requirements, which are met by using the WSPS, include those for a general waste analysis and documentation of LDR requirements. The first requirement, "General Waste Analysis," (WAC 173-303-300) requires the facility owner or operator to obtain an analysis of a dangerous waste that is sufficiently detailed that the waste can be managed. The analytes required to meet this requirement were placed in the WSPS (see Appendix A). The LDR documentation requirement is met by requiring identification of LDR restrictions in the WSPS.

2.4.2 List of Applicable Waste Numbers.

The requirement for waste numbers helps prevent accepting a waste that has not been approved for storage in the DST system. As part of the waste acceptance process, waste numbers listed on the WSPS will be compared to those listed on the DST system Part A Form 3 Permit Application (DOE-RL 1988). Wastes with one or more numbers that are not included on the Part A Form 3 Permit Application will not be accepted into the DST system.

2.4.3 Certification that Waste Conforms to Waste Stream Profile Sheet.

The DST customer certification that the waste stream conforms to a WSPS is used to document that waste composition has not changed from the information contained on the WSPS. If certification is not provided, then the DST System cannot receive the waste. If a change to the waste stream has occurred, a new WSPS must be submitted and approved or the old WSPS modified, before waste can be transferred to the DST system. It should

be noted that this is not a federal LDR certification. The certification must be made using the format specified by TWRS.

2.4.4 Certification Regarding Land Disposal Restrictions Applicability.

This section documents the LDR standards (WAC 173-303-140 and 40 CFR Part 268.7[a][2]) that apply to the waste. Also, this section is used to supply information on the applicability of LDR requirements when the waste is transferred to another TSD unit. See Section 7.3 of this document for additional information on LDR. The generator must supply the required LDR information in the format specified by TWRS. When a generator meets a particular federal LDR requirement, a LDR certification will be required of the DST customer.

2.4.5 Waste Transfer Documentation.

The DST customer must supply documentation with each waste transfer. This information is documented in waste transfer data sheets that are used to track waste transfers into and within the DST system and is discussed further in Section 2.8 of DOE-RL (1991). The waste transfer data documentation must include the following information at minimum:

- waste description
- identification of the waste generator
- date(s) of transfer
- authorizing signature for transfer
- volume of transfer including flush volumes
- material balances
- applicable dangerous waste numbers and LDRs.

2.4.6 Waste Compatibility.

Before transferring any waste stream from the DST customer to the DST system, the waste is evaluated for potential compatibility problems by the DST contractor. The information and limits, which are necessary to ensure safe handling of waste, are documented in a compatibility assessment that is specific for each waste stream. The compatibility assessment evaluates the waste transfer by considering the maximum and minimum values in the WSPS. Criteria for other programs and issues also may be considered during the acceptance evaluation.

Transfers within the DST system are handled in a similar manner in that a compatibility assessment is conducted before each transfer. However, WSPSs are not filled out for inter-DST transfers. The compatibility assessments help ensure that no unforeseen problems will result from a waste transfer.

2.4.7 Double-Shell Tank Customer's Waste Analysis Documentation on File.

Having a copy of the DST customer's WAP or sampling analysis plan (or equivalent document) on file identifies the waste analysis that the DST customer has agreed to supply. It also indicates the quality of analytical data used to fill out the WSPSs and comply with verification requirements. The DST customer's WAP or SAP should meet applicable regulatory requirements. The waste analysis should ensure that data taken for compatibility assessments and verification meet the requirements specified for DST waste compatibility.

2.4.8 Verification of Waste Composition.

Some analysis is required to ensure that information in the WSPSs accurately represent the actual waste composition. The extent of this verification will depend on the particular waste stream but must meet the specification contained in Section 6.0 of this document. Documentation of any specified analysis will be included as part of the approval of each particular waste stream. However, additional analyses can be required at any time.

3.0 WASTE ANALYSIS PARAMETERS

This section provides the selection of analytical parameters based on the Washington State "Dangerous Waste Regulations" (WAC 173-303-300[5][a]) and the U.S. Environmental Protection Agency (EPA) *Waste Analysis at Facilities That Generate, Treat, Store, and Dispose of Hazardous Wastes, A Guidance Manual* (EPA 1994).

3.1 INFORMATION NEEDED

The WSPS summarizes information needed for regulatory purposes and for the safe handling of waste. In addition to providing a general description of the waste, the focus of the information collected for regulatory purposes is to ensure the waste meets DST acceptance criteria and LDR requirements.

Regulatory information is based on knowledge of the waste, and laboratory analyses are not required unless the information cannot be obtained in some other manner. However, actual laboratory analyses are required by Tank Farms for parameters that have been determined as necessary for the safe storage and handling of the waste. These parameters are specified in Section V of the WSPS.

Specific issues for parameter selection are discussed in the subsections below.

3.1.1 Waste Identification

The first step in evaluating the acceptability of a waste is to obtain a general description of the waste and to identify the waste codes and regulatory requirements that apply to the waste. The WSPS provides the format for documenting and reporting this information. These requirements include ensuring the acceptance of wastes that meet DST system permit requirements and reporting the information required by WAC 173-303-380. The applicability of LDR requirements is also collected.

General description of the waste is determined by sampling for the analyses specified in WSPS, section V. Certain analytes are required to verify meeting the acceptance criteria. These are listed in TABLE 3.1 along with the laboratory performing the analyses. Some analytes do not require sampling if accurate process knowledge is available. These analytes, listed in TABLE 3.2, are used to determine Tank Farms Operational parameters or to determine if toxic metals are present.

TABLE 3-1 Required analytes and lab

PFP	222-S or PNL
Pu-239/240	U-233
U-235	Sr-90
Am-241	Y-90
Cs-137	moisture content
SpG	energetics #
%Solids	sodium
separable organic	NaOH
pH	ammonia
NO3	
OH	
NO2	
TOC	
iron in solids	

Energetics analysis is performed using Differential Scanning Calorimeter (DSC) analysis.

TABLE 3-2 Process Knowledge

TCLP Metals	Operational Parameter
arsenic	carbonate
barium	cyanide
cadmium	fluoride (performed at PFP)
chromium	PCB
lead	phosphate
selenium	sulfate
silver	carbon tetrachloride
mercury	Total alpha
	total dissolved solids

Battelle Pacific Northwest Laboratory (PNL) or the 222-S laboratory will do all analyses not performed at PFP.

3.1.2 Identification of Incompatible Wastes

For safe operation of the 241-Z facility, incompatible wastes must not be mixed together. Wastes are considered compatible if, when mixed, they do not:

1. generate extreme heat or pressure, fire or explosion, or violent reaction,
2. produce uncontrolled toxic mists, dusts, or gases in sufficient quantities to threaten human health,
3. produce uncontrolled flammable fumes or gases in sufficient quantities to pose a risk of fire or explosions,
4. damage the structural integrity of the device or facility containing the waste,
5. through other like means threaten human health or the environment.

Incompatible waste is waste that is unsuitable for disposal in the 241-Z tank systems because it may corrode or decay the containment materials. It is unsuitable for mixing with another waste because the mixture might produce any of the effects listed above.

3.1.3 DST Operational Parameters

The DST operational parameters primarily relate to the segregation and compatibility of the waste within the DST system. These specifications are limits and controls imposed upon a process or operation that, if violated, could jeopardize the safety of personnel; damage equipment, TSD units, and the environment; or adversely affect product quality. Some parameters are qualitative and directly applicable to maintaining the integrity of the tanks within the DST system. Section 4.0 of the *Double-Shell Tank System Dangerous Waste Permit Application* (DOE-RL 1991) contains additional information on operational considerations and specifications.

3.2 PFP WASTE CHARACTERIZATION

The PFP waste stream descriptions are based on review of sampling data and process knowledge of the feed compositions and of species transport throughout the various processes. The radionuclide content includes plutonium, uranium, and americium. Fission products such as strontium and cesium have been removed before feed solutions are sent to PFP.

The 241-Z facility waste tanks are covered under a **Part A permit** with the State of Washington. The permit allows the storage of the following toxic constituents and their respective Dangerous Waste Numbers.

corrosive	D002	mercury	D009
barium	D005	silver	D011
chromium	D007	carbon tetrachloride	D019
lead	D008		

The calciner waste stream is corrosive with a pH greater than 12.5. The calciner does not concentrate regulated metals into the spent scrubber solution relative to the amount of Pu in spent scrubber solution.

The laboratory waste streams are dependent on the analyses performed and the sample material. These wastes are usually corrosive and may contain the toxic substances listed above. The lab wastes may also contain non-regulated amounts of arsenic (D004), cadmium (D006), and selenium (D010); metals not covered in the 241-Z Part A permit.

The CAW, RMC high salt waste, and PRF low salt waste were designated Extremely Hazardous Waste and given Dangerous Waste Number WT01 due to high levels of metals and organics. CXP, CUU and RMC low salt waste were designated Dangerous Waste and given Dangerous Waste Number WT02 due to high levels of metals and other inorganics. Depending on the waste stream, some of the chemical constituents known to be present were chromium, lead, and carbon tetrachloride. The RMC high salt wastes were highly basic. The high salt waste streams, CAW, CUU, and the low salt waste streams from PRF and RMC were highly acidic.

4.0 SAMPLING METHOD

The requirements of this section apply to samples that are taken to fill out the WSPS.

4.1 SAMPLING STRATEGY

Sampling strategies must ensure a representative sample is obtained. Sample data will support obtaining and maintaining approval to ship waste to the DST system. The sampling strategy selected should be approved by the DST system contractor.

4.2 SAMPLING EQUIPMENT

All of the 241-Z waste streams are radioactive. Sampling is performed in the 241-ZA sampling glovebox. A steam jet vacuums the waste solution from the storage tank, into the sample glovebox, past the sample valve, and discharges into tank D-5. The steam jet is located directly above tank D-5 at the end of the line allowing the sample to be collected without steam dilution. Tank D-8 also has the option of using a air powered sample pump to move the solution to the sample valve.

The general sampling in 241-Z is conducted as follows:

1) Tank contents are flushed through the sampling loop to purge piping and to ensure representative sampling.

2) A sample bottle is sealed into the glove box and is threaded onto the sample valve to prevent spills.

3) The sample valve is opened and a sample is collected in the sample bottle.

4) The bottle is sealed, placed in a labeled polyethylene bag, and removed from the glove box. Samples are labeled with the following information: a unique sample identification number, sample collection date and time, and sample collector's name.

Detailed sampling instructions elaborate on the sampling sequence outlined above and are provided in Plant Operating Procedure Z0-101-023, *Sample Tank D-4, D-5, D-7 or D-8*. Sample sizes, analyses, turn around times, and operating limits are described in the FSS-Z-080-00017, *Facility Sample Schedule 241-Z*.

4.3 SAMPLE MANAGEMENT

All sampling equipment and containers must be free of contamination that could alter the test results.

Samples transported to the PFP Engineering Laboratory are analyzed within 2 hours of sample delivery. Most samples sent to 222-S or Battelle are analyzed within one week of

sample delivery. Iron in solids and U-233 samples take 2 weeks and PCB samples take 4 weeks to analyze. Due to the rapid turnaround time, samples analyzed at PFP are not preserved.

The analyses, containers, and preservatives to be used are tabulated in Table 4.1, SAMPLING MATRIX. Each sample shall be tracked from the sample hood in 241-ZA to the completion of analysis by a chain of custody record. The pertinent portions of the record shall be filled out after the sample has been packaged in the field. The responsible people shall sign the record as custodian when the sample is transferred. This maintains a retrievable record of sample custody.

TABLE 4.1
SAMPLING MATRIX

Sample No.	Analysis	Analysis by	container	preservative
Required analytes				
1	Pu-239/240 Am-241 total U pH SpG %solids separable Organic NO3- NO2- OH-	PFP	2 @ 30 ml polybottles	none
2	moisture TOC Cs-137 Sr-90/Y-90 sodium NaOH ammonia energetics	222-S or PNL	2 @ 30 ml polybottles	none
3	Iron in solids	222-S or PNL	7 @ 30 ml bolybottles or 250 ml polybottle	none
Requested analytes (not required)				
1a	fluoride	PFP	Included in sample #1	none
2a	aluminum carbonate cyanide phosphate sulfate total alpha total dissolved solids	222-S or PNL	Included in sample #2	none
4	PCB	222-S or PNL	30 ml polybottle	none
5	TCLP metals	222-S or PNL	30 ml polybottle	1 ml of 12 M HNO3

5.0 ANALYTICAL METHODS

Presently it is planned that analysis of the samples will be performed at on-site laboratories; the 222-S Analytical Lab, the PFP Analytical Lab and/or the Battelle Pacific Northwest Laboratory (PNL).

Analytical methods will be selected from those routinely used by Hanford Site analytical laboratories. These methods are discussed in Analytical Methods for Mixed Waste Analysis at the Hanford Site (DOE-RL 1994a). All analytical methods must meet pertinent regulatory requirements such as those contained in WAC-173-030.

6.0 QUALITY ASSURANCE/QUALITY CONTROL PROCEDURES

QAPP documents that control WSCF lab work are HNF-SD-CP-QAPP-017 and then the overall QA Plan is QAPP-036. The 222-S lab work is controlled by HNF-SD-CP-QAPP-003. Laboratory results are reported via the LIMS/LABCORE system, or as required by the customer.

The scientists evaluate and report the data based upon method/client quality control criteria. The Quality Assurance organization conducts data reviews, quality control reviews of instrument systems, procedure compliance reviews, and surveillances to ensure the QAPP requirements are met. In addition the laboratory performs a blind performance evaluation program and is accredited by Ecology for many of the procedures it performs.

The QAPP stipulates the following requirements:

- Quality Assurance/Quality Control objectives and procedures.
- Chain of custody procedures
- Equipment maintenance, calibration and operating procedures
- Record keeping requirements
- Personnel training
- Internal QC checks, audits, inspections, and corrective actions.

Sampling at 241-Z is controlled by plant operating procedures ZO-101-023, Sample Tank D-4, D-5, D-7 or D-8 and facility sample schedule FSS-Z-080-00017, Facility Sample Schedule 241-Z. Chain-Of-Custody of the samples is discussed in ZO-170-051, Sample, Package, And Seal Hazardous Waste Containers and ZO-101-023, Sample Tank D-4, D-5, D-7 or D-8.

Results of analyses performed by the PFP Engineering Laboratory and 222-S are controlled by two stand alone computer systems. The Laboratory Measurement Control System (LMCS) tracks recovery of standards, and the Laboratory Customer Communications System (LCCS) tracks the reproducibility and checks the expected range of sample results. The determination of whether a method is in control is made from the result of the standard analysis. LMCS is controlled by procedure LC-608-002 and LCCS is controlled by procedure LC-608-001. An Off Standard Condition Report (OSCR) is responded to administratively by the laboratory shift manager according to LO-150-002, OSCR Responses. An OSCR issued by LMCS will lock out entry of standard data from the affected measurement system. Analysis results may not be entered into the LMCS until the manager corrects or explains the problem. The completed OSCR is a record of the investigation and any corrective actions that were taken. LQ-150-001 is Laboratory Measurement Quality Control. A software program LINK joins LMCS and LCCS.

7.0 RECORD KEEPING

Records used in the collection of samples and data, analysis of samples, generation of reports and final reports shall be maintained at the PFP facility for a period of three years as per section 2.6 of the facility administration manual. The records that fit this category include but are not limited to:

- A logbook which documents the sample identification number, the date and time of sampling, the sample collection point, and other significant observations.
- Copies of chain-of-custody records for each sample containing the sample identification number, date and time of collection, number and types of containers, signatures of the sampler and all subsequent custodians, and the dates and times of custody transfers.
- Copies of analytical request forms for each sample which lists the sample identification number, the analyses requested, and the requestor's name and telephone number. The laboratory shall maintain original analytical request forms for three years.
- Sample analysis records for each sample. These include raw laboratory bench sheets, outputs from all instruments, copies of calculations used to derive reportable constituent concentrations from instrument outputs, laboratory control charts, and analysis reports which are certified by the laboratory manager and contain the sample identification number, date analyzed, and concentrations of all requested parameters in the appropriate units.
- The Waste Receiving and Transfer Data Sheets.

LIST OF DOCUMENTS

WAC-173-303, WASHINGTON ADMINISTRATIVE CODES, Dangerous Waste Regulations

40 CFR 265, CODE OF FEDERAL REGULATIONS, Protection of Environment, Interim Status Standards For Owners and Operators of Hazardous Waste Treatment, Storage, and Disposable Facilities

OSD-Z-184-00010, *241-Z Operating Specification Document*

HNF-SD-WM-EV-053, *Double Shell Tank System Waste Analysis Plan*

Hanford Facility Dangerous Waste Permit Application, Part A, Revision 5

ZO-101-023, *Sample Tank D-4, D-5, D-7 or D-8*

FSS-Z-080-00017, *Facility Sample Schedule, 241-Z*

HNF-SD-CP-QAPP-001, *Analytical Chemistry Services Laboratories Quality Assurance Plan*

QAMS-005, *Interim Guidelines for preparing Quality Assurance Project Plans*, EPA-600/4-83-004, QAMS-005/80

HNF-SD-CP-QAPP-003, *Quality Assurance Program Plan for the Chemical Analysis of Environmental Samples*

ZO-170-051, *Sample, Package, and Seal Hazardous Waste Containers*

DISTRIBUTION SHEET

To	From	
Distribution	D. R. Hirzel	Page 1 of 1
Project Title/Work Order		Date 4/20/2000
Waste Analysis Plan for 241-Z		EDT No.
		ECN No. 710030

Name	MSIN	Text With All Attach.	Text Only	Attach./ Appendix Only	EDT/ECN Only
JE Bramson	T5-54	x			
RA Burk	T4-20	x			
JF Durnil	T5-55	x			
DR Hirzel	T5-55	x			
RL Rhoten	T5-04	x			
AM Stubbs	T5-55	x			
ML Dexter	R1-51	x			
CH Mulkey	R1-51	x			
Central Files	B1-07	X			

A-6000-135 (10/97)