ENGINEERING CHANGE NOTICE Page 1 of 2	☒ DM ☐ FM ☐ TM	1a. ECN 720095 R 0 1b. Proj. ECN W- -

2. Request Information Record Information on the ECN-1 Form	3a. Design Inputs -Record Information on the ECN-2 Form	3b. Design References - Record Information on the ECN-3 Form	3c. Engineering Evaluation / Estimate / Approval to Proceed w/ the Design - Record Information on the ECN-4 Form

4. Originator's Name, Organization, MSIN, & Phone No.	5. USQ Number	6. Date
B. M. Hanlon, Inventory & Flowsheet Engineering, R3-72, 3773-2053	No. TF- - ☒ N/A Init. BMH Date 2/11/03	2/5/03

7. Title	8. Bldg. / Facility No.	9. Equipment / Component ID	10. Approval Designator
HNF-EP-0182, Rev. 177, Waste Tank Summary for Month Ending December 31, 2002	241G	N/A	N/A

11. Document Numbers Changed by this ECN (For FM or TM Changes Record Information on the ECN-5 Form) Sheet and Rev.	12. Design Basis Documents?	13. Safety Designation	14. Expedited / Off-Shift ECN?
HNF-EP-0182, Rev. 176	☐ Yes ☒ No	☐ SC ☐ SS ☐ GS ☒ N/A	☐ Yes ☒ No

15a. Work Package Number	15b. Modification Work Completed	15c. Restored to Original Status (TM)	16. Fabrication Support ECN?
N/A	N/A Responsible Engineer / Date	N/A Responsible Engineer / Date	☐ Yes ☒ No

17. Description of the Change (Use ECN Continuation pages, as needed)

Complete revision of HNF-EP-0182, Waste Tank Summary Report

18. Justification of the Change (Use ECN Continuation pages, as needed)

DOE-ORP requires this document to be revised and issued monthly

19. ECN Category

☒ Direct Revision

☐ Supplemental

ECN Revision Type

☐ Void/Cancel

☐ Closure

☐ Revision

20. Distribution (Name and MSIN)

Distribution list attached following document

Release Stamp

DATE: FEB 13 2003

STA: 4

HANFORD RELEASE

ID: 2

A-6003-563 (01/03)

ENGINEERING CHANGE NOTICE	Page 2 of 2	☒ DM ☐ FM ☐ TM	1a. ECN 720095 R 0
			1b. Proj. ECN W- -

21. Design Check	22. Design Verification Required?	23. Closeout / Cancel / Void
Record Information on the ECN-6 Form N/A	☐ Yes ☒ No If Yes, as a minimum attach the one page checklist from TFC-ENG-DESIGN-P-17.	☐ Yes ☒ No If Yes, Record Information on the ECN-7 Form and attach form(s).

24. Revisions Planned (Include a brief description of the contents of each revision)

Document will be revised monthly in 2003

Note: All Revisions shall have the approvals of the affected organizations as identified in block 9 "Approval Designator," on page 1 of this ECN.

25a. Commercial Grade Item Dedication Numbers (associated with this design change)	25b. Engineering Data Transmittal Numbers (associated with this design change, e.g., new drawings, new documents)
N/A	N/A

26a. Design Cost Estimate	26b. Materials / Procurement Costs	26c. Estimated Labor Hours
N/A	N/A	N/A

27. Field Change Notice(s) Used? (Used for ECN Revisions only)	
☐ Yes ☒ No If Yes, Record Information on the ECN-8 Form attach form(s) and identify permanent changes.	NOTE: ECN Revisions are required to record and approve all FCN's issued during the field modification work process. If the FCN's have not changed the original design media then they are just incorporated into the ECN file via an ECN revision. If the FCN did change the original design media then the ECN Revision will include the necessary engineering changes to the original design media changes.

28. Approvals

	Signature	Date		Signature	Date
Design Authority			Originator/Design Agent		
Team Lead/Lead Engr.	Paul Hanlon	2/11/03	Professional Engineer		
Resp. Engineer	Paul Hanlon	2/6/03	Project Engineer		
Resp. Manager	NW Kirch	2/11/03	Quality Assurance		
Quality Assurance			Safety		
IS&H Engineer			Designer		
NS&L Engineer			Environ. Engineer		
Environ. Engineer			Other		
Project Engineer			Other		
Design Checker	NW Kirch	2/13/03	DEPARTMENT OF ENERGY / OFFICE OF RIVER PROTECTION		
Design Verifier			Signature or a Control Number that tracks the Approval Signature		
Operations					
Radcon			ADDITIONAL SIGNATURES		
Other					
Other					

ECN - 1 ENGINEERING REQUEST FORM Page ~~1~~ 3 of ~~1~~ 7.	☒ DM ☐ FM ☐ TM	1a. ECN 720095 R 0 1b. Proj. ECN W- -

Requestor's Name (Print)	Date	REA Reference
B. M. Hanlon	2/5/03	N/A

Equipment Name	Estimated Need Date
HNF-EP-0182, Waste Tank Summary Report	Monthly - 2003

Problem/Issue Statement

Issue monthly to update document

(Distribution list attached following document)

Purpose for the Proposed Modification

Direct revision

(Computer generated file)

Basis for the Estimated Need Date

DOE-ORP requirement to be issued monthly

Requestor's Signature	Date	Requestor's Manager's Signature	Date
BM Hanlon	2/6/03	* MWKuil	2/11/03

Responsible Manager Approval

Work Package Number (If Known)	Estimated Evaluation ROM Cost	CACN
N/A	N/A	501008
Process as a Simple Modification? ☒ Yes ☐ No	***Assigned to (Team Lead)*** B. M. Hanlon	***Date*** 2/5/03
Responsible Manager's Signature * MWKuil	☒ Approve ☐ Reject	***Date*** 2/11/03

If rejected, explain reason for rejection:

(Once rejected the Responsible Manager returns the request to the Requestor's Manager)

Italicized text items need to be addressed. Standard text items need to be addressed as applicable to the problem/issue described.

A-6003-566 (01/03)

ECN - 5 DRAWING / DOCUMENT CHANGE LIST FORM Sheet 1 of ECN – 5 Page ~~3~~ 4. of ~~8~~ 7.	☒ DM ☐ FM ☐ TM	1a. ECN 720095 R 0 1b. Proj. ECN W- -

List of Engineering Drawings/Documents to be Modified (Use the attached checklist for guidance)

Dwg./Doc. Number (Sheet/Page, Rev)	Title/Type	Shared	Existing Change Document Nos.
HNF-EP-0182, Rev. 176	Waste Tank Summary Report for Month Ending November 30, 2002	☐	
		☐	
		☐	
		☐	
		☐	
		☐	
		☐	
		☐	
		☐	
		☐	
		☐	
		☐	

Submitted to Document Service Center Prior to ECN Release?

☐ Yes ☒ No	Team Lead Kim Hanlon	Date 2/11/03

List of Non-Engineering Documents Needed to be Modified

Document Number/Revision, Sheet/Page (If Available)	Document Title	Document Owner (Organization)	Individual Notified	Method	Date Notified

page 5 of 6 ECN-720095-R0

List of Engineering Drawings/Documents to be Modified (Use the attached checklist for guidance)					
Dwg./Doc. Number (Sheet/Page, Rev)	Title/Type	Shared	Existing Change Document Nos.		

ECN - 5 DRAWING / DOCUMENT CHANGE LIST FORM	☒ DM ☐ FM ☐ TM	1a. ECN 720095 R 0
Sheet 2 of ECN – 5 Page 4 of 6		1b. Proj. ECN W- -

Drawings/Documents to be Modified Checklist			
System Design Description	☐ Yes ☐ No ☒ N/A	Operating Procedure	☐ Yes ☐ No ☒ N/A
Functional Design Criteria	☐ Yes ☐ No ☒ N/A	System/Subsystem Specifications	☐ Yes ☐ No ☒ N/A
Functional Requirements	☐ Yes ☐ No ☒ N/A	Engineering Flow Diagram Drawing	☐ Yes ☐ No ☒ N/A
Operating Specification	☐ Yes ☐ No ☒ N/A	General Arrangement Drawing	☐ Yes ☐ No ☒ N/A
Criticality Specification	☐ Yes ☐ No ☒ N/A	Material Specification	☐ Yes ☐ No ☒ N/A
Conceptual Design Report	☐ Yes ☐ No ☒ N/A	Sampling Plan	☐ Yes ☐ No ☒ N/A
Detailed Design Report	☐ Yes ☐ No ☒ N/A	Inspection Plan	☐ Yes ☐ No ☒ N/A
Equipment Specification	☐ Yes ☐ No ☒ N/A	Radiation Control Procedure	☐ Yes ☐ No ☒ N/A
Procurement Specification	☐ Yes ☐ No ☒ N/A	Spare Parts List	☐ Yes ☐ No ☒ N/A
Construction Specification	☐ Yes ☐ No ☒ N/A	Test Specification	☐ Yes ☐ No ☒ N/A
Vendor Information	☐ Yes ☐ No ☒ N/A	Test Plan	☐ Yes ☐ No ☒ N/A
Operations / Maintenance Manual	☐ Yes ☐ No ☒ N/A	Acceptance Test Procedure	☐ Yes ☐ No ☒ N/A
Safety Analysis / FSAR / SAR / DSA	☐ Yes ☐ No ☒ N/A	Pre-Operational Test Procedure	☐ Yes ☐ No ☒ N/A
Technical Safety Requirement	☐ Yes ☐ No ☒ N/A	Operational Test Procedure	☐ Yes ☐ No ☒ N/A
Master Equipment List	☐ Yes ☐ No ☒ N/A	ASME Coded Item / Vessel	☐ Yes ☐ No ☒ N/A
Safety Equipment List	☐ Yes ☐ No ☒ N/A	Human Factor Consideration	☐ Yes ☐ No ☒ N/A
Radiation Work Permit	☐ Yes ☐ No ☒ N/A	Automated Control Configuration Procedure	☐ Yes ☐ No ☒ N/A
Environmental Requirement	☐ Yes ☐ No ☒ N/A	Computer / Automated Control Software Plan	☐ Yes ☐ No ☒ N/A
Environmental Permit	☐ Yes ☐ No ☒ N/A	Raceway / Cable Schedules	☐ Yes ☐ No ☒ N/A
Seismic / Stress / Structural Analysis	☐ Yes ☐ No ☒ N/A	Work Control Procedure	☐ Yes ☐ No ☒ N/A
Design Report	☐ Yes ☐ No ☒ N/A	Corrective Maintenance Procedure	☐ Yes ☐ No ☒ N/A
Interface Control Drawing	☐ Yes ☐ No ☒ N/A	Process Control Plan	☐ Yes ☐ No ☒ N/A
Calibration Procedure	☐ Yes ☐ No ☒ N/A	Process Control Procedure	☐ Yes ☐ No ☒ N/A
Preventive Maintenance Procedure	☐ Yes ☐ No ☒ N/A	Flow Sheet	☐ Yes ☐ No ☒ N/A
Engineering Procedure	☐ Yes ☐ No ☒ N/A	Purchase Requisition	☐ Yes ☐ No ☒ N/A
Security Plan	☐ Yes ☐ No ☒ N/A	Hazards Analysis	☐ Yes ☐ No ☒ N/A
Emergency Plan	☐ Yes ☐ No ☒ N/A	JCS PM Activity Datasheet	☐ Yes ☐ No ☒ N/A
	☐ Yes ☐ No ☒ N/A		☐ Yes ☐ No ☒ N/A

ECN - 6 DESIGN CHECK LIST Sheet 1 of ECN – 6 Page ~~5~~ 6. 7 of ~~8~~	☒ DM ☐ FM ☐ TM	1a. ECN 720095 R 0 1b. Proj. ECN W- -

Design Details/Attributes (to be filled out by the change originator) identified in the ECN.

1. Issue/Problem Statement included	☐ Yes ☐ No ☒ N/A	*21. Basis for Selected Alternative explained, including assumptions*	☐ Yes ☐ No ☒ N/A
2. Safety/Commitment/Programmatic Impacts identified – NEPA Documentation completed	☐ Yes ☐ No ☒ N/A	*22. Potential Component/System Impacts identified and resolved*	☐ Yes ☐ No ☒ N/A
3. System/Equipment/Personnel Impacts identified	☐ Yes ☐ No ☒ N/A	*23. Potential Software Impacts identified and resolved*	☐ Yes ☐ No ☒ N/A
4. Technical Evaluation included	☐ Yes ☐ No ☒ N/A	*24. Potential Safety Impacts are identified and resolved (e.g., energized electrical equipment)*	☐ Yes ☐ No ☒ N/A
5. Compliance w/ Design Basis identified	☐ Yes ☐ No ☒ N/A	*25. Modification is Constructible and can be implemented*	☐ Yes ☐ No ☒ N/A
6. Assumptions/Sources clearly identified	☐ Yes ☐ No ☒ N/A	*26. Design considers Operational Impacts*	☐ Yes ☐ No ☒ N/A
7. Affected Documents and Databases clearly identified	☐ Yes ☐ No ☒ N/A	*27. Contamination Controls are planned*	☐ Yes ☐ No ☒ N/A
8. Inputs Verified	☐ Yes ☐ No ☒ N/A	*28. Pre-Installation/Mockup/Prototype Testing planned*	☐ Yes ☐ No ☒ N/A
9. Required Function(s) / changes clearly identified	☐ Yes ☐ No ☒ N/A	*29. Sketches/Drawings for Tools/Fabricated Components included*	☐ Yes ☐ No ☒ N/A
10. Safety Basis/Commitments/Concerns evaluated	☐ Yes ☐ No ☒ N/A	*30. Hardware Design described*	☐ Yes ☐ No ☒ N/A
11. Application of Industry Standards/Codes explained	☐ Yes ☐ No ☒ N/A	*31. Software/Firmware Design described*	☐ Yes ☐ No ☒ N/A
12. Proper Analytical Techniques employed	☐ Yes ☐ No ☒ N/A	*32. Inspections (per Codes & Standards) / Quality Checks included*	☐ Yes ☐ No ☒ N/A
13. Interfaces evaluated and identified	☐ Yes ☐ No ☒ N/A	*33. Dimensions and Tolerances included*	☐ Yes ☐ No ☒ N/A
14. Material/Component Compatibility evaluated	☐ Yes ☐ No ☒ N/A	*34. Sketches/Drawings for Installation included*	☐ Yes ☐ No ☒ N/A
15. ALARA/Radiological controls/chemical hazards evaluated	☐ Yes ☐ No ☒ N/A	*35. Housekeeping/Personnel Safety Requirements identified*	☐ Yes ☐ No ☒ N/A
16. Human/Machine Interface evaluated	☐ Yes ☐ No ☒ N/A	*36. Walkdown(s) performed/Labeling Correct*	☐ Yes ☐ No ☒ N/A
17. Program impacts evaluated	☐ Yes ☐ No ☒ N/A	*37. Acceptance Test generated and Acceptance Criteria included*	☐ Yes ☐ No ☒ N/A
18. Design Basis Calculations updated	☐ Yes ☐ No ☒ N/A	*38. M&TE Requirements identified*	☐ Yes ☐ No ☒ N/A
19. Alternatives described/evaluated and address resolution of problem	☐ Yes ☐ No ☒ N/A	*39. Training/Qualification of Test Personnel identified*	☐ Yes ☐ No ☒ N/A
20. Impacts on Maintenance and OPS described	☐ Yes ☐ No ☒ N/A	*40. Safety and Hazards Analysis assessed*	☐ Yes ☐ No ☒ N/A

Design Originator (Print/Sign)	***Date***

Italicized text items need to be addressed. Standard text items need to be addressed as applicable to the change as described.

ECN - 6 DESIGN CHECK LIST Sheet 2 of ECN – 6	Page ~~8 of 8~~ 7 · 7	☒ DM ☐ FM ☐ TM	1a. ECN 720095 R 0 1b. Proj. ECN W- -

Design Check Method (Select method(s) and provide explanation of how to be performed):

☐ Peer Check	☐ Design Check Team*	☐ Other _____

Design Check Explanation:

* Design check team members other than the originating organization normally should consist of personnel representing: Operations, Maintenance & Reliability Engineering, Maintenance Management, Maintenance Crafts, Safety, and Projects.

Design Check Details

Design inputs correctly identified?	☐ Yes ☐ No ☒ N/A	*Design changes properly documented?*	☐ Yes ☐ No ☒ N/A
Calculations checked and are correct?	☐ Yes ☐ No ☒ N/A	*Test procedures reviewed and are correct?*	☐ Yes ☐ No ☒ N/A
Design assumptions are stated and verified?	☐ Yes ☐ No ☒ N/A	*Is the design change adequate?*	☐ Yes ☐ No ☒ N/A
Design criteria incorporated into the design?	☐ Yes ☐ No ☒ N/A	*Is the design change complete?*	☐ Yes ☐ No ☒ N/A
Interfaces clearly identified in the design?	☐ Yes ☐ No ☒ N/A	*Is the design change correct?*	☐ Yes ☐ No ☒ 5N/A
EQRG pre-release review required?	☐ Yes ☒ No	EQRG Pre-release Approval	Date

Comments:

Reference TFC-ENG-DESIGN-P-17, Design Verification

Design Checker (Print/Sign)	***Date***
x NWKirch / NW KIRCH	2/13/2003

Italicized text items need to be addressed. Standard text items need to be addressed as applicable to the problem/issue described.

DISTRIBUTION
December 31, 2002

Number of copies

OFFSITE - USA

2 **Congress of the United States**
U.S. Senate
717 Hart Senate Building
Washington D.C. 20510

Senator Ron Wyden

U.S. House of Representatives
1323 Longworth House Office Building
Washington D. C. 20515

Congressman Richard "Doc" Hastings, 4th District
Atten: Jeff Markey

3 **U.S. Department of Energy-Headquarters**
1000 Independence Avenue, SW
Washington, D. C. 20585

Harry Calley	EM-38	Cloverleaf Bldg.
Willam M. Levitan	EM-1	FORS/5A-014

U.S. Department of Energy-Headquarters
19901 Germantown Rd
Germantown, MD 20874

Kurt Juroff EM-44

1 **Washington State Department of Ecology**
Nuclear Waste Program
P. O. Box 47600
Olympia, WA 98504-7600

Roger Stanley

1 **Washington State Department of Health**
Radiation Protection
7171 Cleanwater Lane
P. O. Box 47827
Olympia, WA 98504-7827

Allen W. Conklin

1 **Oregon State Office of Energy**
625 Marion St. NE, Suite 1
Salem, OR 97301

Dirk Dunning
Do not remove from distribution without permission from ODOE

1 **MACTEC**
8310 Centerbrook Place
Alexandra, VA 22308

Stanley Blacker, Vice President
Do not remove from distribution without permission from addressee

1 **CH2M HILL**
6060 S. Willow Drive
Greenwood Village, CO 80111-5142

Dr. Bob Iotti, President and General Manager

TRI-CITIES:

1 **ARES Corporation**
636 Jadwin Ave., Suite B
Richland, WA 99352

3 **Washington State Department of Ecology**
1315 W. 4th Avenue
Kennewick, WA 99336-6018

Brenda Jentzen
Jeff Lyon
Nancy Uziemblo

1 Richard Welty
409 S. 41st Ave
W. Richland, WA 99353

1 **Tri-City Herald**
P.O. Box 2608
Tri-Cities, WA 99302

John Stang

1 Harry Babad
2540 Cordoba Ct.
Richland, WA 99352

ONSITE

2 **S. M. STOLLER CORPORATION**
P. D. Henwood B2-62
R. G. McCain B2-62

1 **General Accounting Office**
C. R. Abraham A1-80

1 **Washington State Department of Ecology**
Library B5-18

1 **U.S. Environmental Protection Agency**
David Bartus B5-18

13 **U.S. Department of Energy**

C. J. Bosted	H6-60
D. C. Bryson	H6-60
M. B. Burandt	H6-60
V. L. Callahan	H6-60
S. H. Pfaff	H6-60
D. H. Irby	H6-60
Wen-Shou Liou	H6-60
J. L. Polehn	H6-60
M. J. Royack	H6-60
R. W. Russell III	H6-60
A. J. Stevens	H6-60
D. J. Williams	H6-60
Reading Room	H2-53

1 **Pacific National Northwest Laboratories**

B. E. Opitz	K6-75

82 **CH2M HILL Hanford Group, Inc. and Affiliated Companies**

D. I. Allen	H6-03
J. C. Allen-Floyd	H6-64
D. B. Amerine	R2-50
E. S. Aromi	H6-63
J. J. Badden	S5-07
S. F. Bobrowski	K7-28
B. C. Boone	T4-07
K. M. Bowen	R2-12
V. C. Boyles	R2-11
D. B. Cartmell	H6-11
R. J. Cash	R2-37
J. M. Conner	R2-11
J. L. Cowin	T4-08
W. L. Cowley	R1-44
Q. R. Decker	R1-44
C. DeFigh-Price	R2-58
R. A. Dodd	H6-22
J. A. Eacker	R2-50
A. F. Erhart	R3-73
J. G. Field	R2-12
L. A. Fort	R2-11
K. D. Fowler	R2-11
G. T. Frater	S7-12
M. Frazier	R1-44
R. L. Frink	T4-08
S. J. Eberlein	R2-50
J. R. Freeman-Pollard	S0-11
K. A. Gasper	H6-03
M. S. Gerber	B3-30
P. W. Gibbons	S7-65
B. M. Hanlon (10)	R3-72
B. A. Higley	R3-73

K. M. Hodgson	R1-14
T. M. Hohl	R3-73
J. Jacobs	R1-44
T. E. Jones	E6-35
M. R. Kembel	S5-07
N. W. Kirch	R3-73
M. A. Knight	R2-11
J. S. Konyu	S7-64
G. M. Koreski	R2-11
J. G. Kristofzski	H6-03
D. L. Kubie	S7-95
J. A. Lechelt	R2-11
T. H. May	R2-11
J. A. McDonald Jr.	R2-50
V. E. Mehrer	S0-04
R. Ni	H6-03
D. L. Parker	R2-37
R. S. Popielarczyk	H6-03
P. A. Powell	R1-51
R. E. Raymond	H6-22
B. J. Rabe	S7-03
W. E. Ross	H6-22
T. L. Sams	H6-22
D. J. Saueressig	S7-20
N. J. Scott-Proctor	S5-00
L. S. Sorenson	R1-44
G. A. Stanton, Jr.	R2-12
J. N. Strode	R3-73
R. R. Thompson	H6-22
D. T. Vladimiroff	S7-20
J. A. Voogd	R2-50
L. R. Webb (6)	R1-10
Central Files	B1-07
200 West Shift Office	T4-00
200 East Shift Office	S7-02
Environmental Data Mgmt Center (2)	H6-08
Environmental Library	H6-16

HNF-EP-0182, Rev. 177

Waste Tank Summary Report for Month Ending December 31, 2002

Prepared for the U.S. Department of Energy
Assistant Secretary for Environmental Management

CH2MHILL
Hanford Group, Inc.
Richland, Washington

Contractor for the U.S. Department of Energy
Office of River Protection under Contract DE-AC27-99RL14047

Approved for Public Release; Further Dissemination Unlimited

LEGAL DISCLAIMER

This report was prepared as an account of work sponsored by an agency of the United States Government. Neither the United States Government nor any agency thereof, nor any of their employees, nor any of their contractors, subcontractors or their employees, makes any warranty, express or implied, or assumes any legal liability or responsibility for the accuracy, completeness, or any third party's use or the results of such use of any information, apparatus, product, or process disclosed, or represents that its use would not infringe privately owned rights. Reference herein to any specific commercial product, process, or service by trade name, trademark, manufacturer, or otherwise, does not necessarily constitute or imply its endorsement, recommendation, or favoring by the United States Government or any agency thereof or its contractors or subcontractors. The views and opinions of authors expressed herein do not necessarily state or reflect those of the United States Government or any agency thereof.

This report has been reproduced from the best available copy.

Printed in the United States of America

S

HNF-EP-0182, Rev. 177

WASTE TANK SUMMARY REPORT FOR MONTH ENDING DECEMBER 31, 2002

BM HANLON
CH2M HILL Hanford Group, Inc.
Richland, WA 99352
U.S. Department of Energy Contract DE-AC27-99RL14047

EDT/ECN: ECN-720095 UC:
Cost Center: Charge Code:
B&R Code: Total Pages: 74

Key Words: REPORT, WASTE TANK SUMMARY

Abstract: See page iii of document

TRADEMARK DISCLAIMER. Reference herein to any specific commercial product, process, or service by trade name, trademark, manufacturer, or otherwise, does not necessarily constitute or imply its endorsement, recommendation, or favoring by the United States Government or any agency thereof or its contractors or subcontractors.

Printed in the United States of America. To obtain copies of this document, contact: Document Control Services, P.O. Box 950, Mailstop H6-08, Richland WA 99352, Phone (509) 372-2420; Fax (509) 376-4989.

DATE: HANFORD RELEASE
STA: 4 ID: 2
FEB 13 2003

L. Fitzpatrick Ma Williams

Release Approval Date Release Stamp

Approved For Public Release

RECORD OF REVISION	(1) Document Number HNF-EP-0182	Page 1

(2) Title
WASTE TANK SUMMARY REPORT FOR MONTH ENDING DECEMBER 31, 2002

Change Control Record

(3) Revision	(4) Description of Change - Replace, Add, and Delete Pages	Authorized for Release (5) Cog. Engr.	(6) Cog. Mgr. Date
153	(7) EDT-631372	BM Hanlon	JS Garfield
RS 177	Incorporation of ECN-720095, R-0	BM Hanlon	NW Kirch 2/11/03

A-7320-005 (10/97)

HNF-EP-0182, Rev.177

Waste Tank Summary Report for Month Ending December 31, 2002

B. M. Hanlon
CH2M HILL Hanford Group, Inc.

Date Published
February 2003

Prepared for the U.S. Department of Energy
Assistant Secretary for Environmental Management

CH2MHILL
Hanford Group, Inc.

P. O. Box 1500
Richland, Washington

Contractor for the U.S. Department of Energy
Office of River Protection under Contract DE-AC27-99RL14047

Approved for Public Release; Further Dissemination Unlimited

This page intentionally left blank.

WASTE TANK SUMMARY REPORT

B. M. Hanlon

ABSTRACT

This report is the official inventory for radioactive waste stored in underground tanks in the 200 Areas at the Hanford Site. Data that depict the status of stored radioactive waste and tank vessel integrity are contained within the report. This report provides data on each of the existing 177 large underground waste storage tanks and 60 smaller miscellaneous underground storage tanks and special surveillance facilities, and supplemental information regarding tank surveillance anomalies and ongoing investigations. This report is intended to meet the requirement of U.S. Department of Energy Order 435.1 (DOE-HQ, August 28, 2001, Radioactive Waste Management, U.S. Department of Energy-Washington, D.C.) requiring the reporting of waste inventories and space utilization for the Hanford Site Tank Farm tanks.

This page intentionally left blank.

TABLE OF CONTENTS

SUMMARY

I. WASTE TANK STATUS 1
II. WASTE TANK INVESTIGATIONS 1
III. SURVEILLANCE AND WASTE TANK STATUS HIGHLIGHTS 2

APPENDICES

APPENDIX A: DOUBLE-SHELL TANKS MONTHLY SUMMARY TABLES A-1
Table A-1. Inventory and Status by Tank – Double-Shell Tanks A-2
Table A-2. Double-Shell Tank Space Allocation, Inventory, and Waste Receipts A-4
Table A-3. Double Shell Monitoring Frequency Status (28 Tanks) A-5

APPENDIX B: SINGLE-SHELL TANKS MONTHLY SUMMARY TABLES B-1
Table B-1. Inventory and Status by Tank – Single-Shell Tanks B-2
Table B-2. Single-Shell Tanks Stabilization Status Summary B-12
Table B-3. Single-Shell Tanks Interim Stabilization Status B-13
Table B-4. Single-Shell Tank Interim Stabilization Milestones B-16
Table B-5. Single Shell Tank Leak Volume Estimates (Sheet 1 of 6) B-18
Table B-6. Single-Shell Tanks Monitoring Frequency Status (149 Tanks) B-24

APPENDIX C: MISCELLANEOUS UNDERGROUND STORAGE TANKS AND SPECIAL SURVEILLANCE FACILITIES C-1
Table C-1. East and West Area Miscellaneous Underground Storage Tanks and Special Surveillance Facilities C-2
Table C-2. East Area Inactive Miscellaneous Underground Storage Tanks and Special Surveillance Facilities C-3
Table C-3. West Area Inactive Miscellaneous Underground Storage Tanks and Special Surveillance Facilities C-4

APPENDIX D: GLOSSARY OF TERMS D-1
Table D-1. Glossary of Terms D-2

APPENDIX E: TANK CONFIGURATION AND FACILITIES CHARTS E-1
Figure E-1. High-Level Waste Tank Configuration E-2
Figure E-2. Double-Shell Tank Instrumentation Configuration E-3
Figure E-3. Single-Shell Tank Instrumentation Configuration E-4
Figure E-4. 200 East Tank Waste Contents E-5/6
Figure E-5. 200 West Tank Waste Contents E-7/8
Figure E-6. Tank Farm Facilities Chart - 200 East E-9/10
Figure E-7. Tank Farm Facilities Chart - 200 West E-11/12

METRIC CONVERSION CHART		
1 inch	=	2.54 centimeters
1 foot	=	30.48 centimeters
1 gallon	=	3.79 liters
1 ton	=	0.91 metric tons

$$°F = \left(\frac{9}{5}°C\right) + 32$$

1 Btu/h = 0.2931 watts
(International Table)

WASTE TANK SUMMARY REPORT
For Month Ending December 31, 2002

Note: Changes from the previous month are in **bold print.**

I. WASTE TANK STATUS

Double-Shell Tanks (DST)	28 double-shell	10/86 - date last DST tank was completed
Single-Shell Tanks (SST)	149 single-shell	1966 - date last SST tank was completed
Assumed Leaker Tanks	67 single-shell	07/93 - date last Assumed Leaker was identified
Sound Tanks	28 double-shell 82 single-shell	1986 - date DSTs determined sound 07/93 - date last SST determined Sound
Interim Stabilized Tanks[a] (IS)	132 single-shell	08/02 - date last IS occurred
Not Interim Stabilized[b]	17 single-shell	Tanks still to be Interim Stabilized
Isolated-Intrusion Prevention Completed (IP)[c]	99 single-shell	09/96 - date last IP occurred
Retrieval[d]	9 single-shell	10/02 - date effective
Misc. Underground Storage Tanks (MUST) and Special Surveillance Facilities (Active)	10 Tanks East Area 7 Tanks West Area	03/01 - last date a tank was added or removed from MUST list
Misc. Underground Storage Tanks (IMUST) and Special Surveillance Facilities (Inactive)[e]	18 Tanks East Area 25 Tanks West Area	11/01 - last date a tank was added or removed from IMUST list

[a] Of the 132 tanks classified as Interim Stabilized, 65 are listed as Assumed Leakers. (See Table B-5)

[b] Two of these tanks are Assumed Leakers (BY-105 and BY-106). (See Table B-5)

[c] Nine tanks were recategorized as "Retrieval" (see note [d] below).

[d] Tank Status for nine tanks (C-104, C-201, C-202, C-203, C-204, S-102, S-103, S-105 and S-106) was changed to "Retrieval," effective October 2002. (See Table B-1)

[e] Tables C-2 and C-3, the Inactive Miscellaneous Underground Storage Tanks (IMUST) now reflect only those tanks managed by CH2M HILL Hanford Group, Inc. (CH2M HILL).

II. WASTE TANK INVESTIGATIONS

This section includes all single- or double-shell tanks or catch tanks which are showing surface level or interstitial liquid level (ILL) decreases, or drywell radiation level increases in excess of established criteria.

A. Assumed Leakers or Assumed Re-leakers: (See Appendix D for definition of "Re-leaker")

This section includes all single- or double-shell tanks or catch tanks for which an off-normal or unusual occurrence report has been issued, or for which a waste tank investigation is in progress, for assumed leaks or re-leaks. Tanks/catch tanks will remain on this list until either a) completion of Interim Stabilization, b) the updated occurrence report indicates that the tank/catch tank is not an assumed leaker, or c) the investigation is completed.

There are none at this time.

III. SURVEILLANCE AND WASTE TANK STATUS HIGHLIGHTS

A. Single-Shell Tanks Saltwell Jet Pumping (See Table B-1 footnotes for further information)

Tank A-101 - Pumping began May 6, 2000. No pumping occurred between August 2000 and January 2002; pumping resumed January 17, 2002. No pumping in June 2002; the pump failed and was scheduled to be replaced. The pump was replaced and pumping was resumed on July 20, 2002. **A total of 2 Kgallons was pumped in December 2002; a total of 508 Kgallons has been pumped since the start of pumping in May 2000.** (Total Kgallons pumped differs from previous volumes - see Table B-1 footnotes).

Tank AX-101 - Pumping began July 29, 2000. No pumping occurred between August 2000 and March 2001; pumping resumed March 22, 2001. Pumping was shut down on April 3, 2001, due to a transfer line failure. Pumping resumed February 1, 2002. **A total of 3 Kgallons was pumped in December 2002; a total of 360 Kgallons has been pumped since the start of pumping in July 2000.** (Total Kgallons pumped differs from previous volumes - see Table B-1 footnotes).

Tank BY-105 - Pumping began July 11, 2001. Pumping was shut down in August 2001 and resumed in December 2001. No pumping occurred between December and August 2002. Pumping resumed in August 2002. Pumping was shut down on August 30, 2002, because Double-Contained Receiver Tank (DCRT) BX-244 was full. Pumping was resumed September 1, 2002, after the waste was transferred. A total of 12 Kgallons was pumped in September 2002; a total of 45 Kgallons has been pumped from this tank since the start of pumping in July 2001.

This tank was placed under evaluation for meeting Interim Stabilization criteria as of September 13, 2002.

Tank BY-106 - Pumping began in August 1995 and was shut down in October 1995 due to an Unreviewed Safety Question (USQ) evaluation for flammable gas concerns. Pumping was restarted July 11, 2001. Pumping was shut down in August 2001 and resumed in November 2001. In December 2001, a total of 5.3 Kgallons was pumped from this tank, resulting in a total of 87.4 Kgallons having been pumped since the start of pumping in August 1995. No pumping

occurred between December 2001 and July 2002. Pumping resumed in August 2002. Pumping was shut down on August 30, 2002, because Double-Contained Receiver Tank (DCRT) BX-244 was full. Pumping was resumed on September 1, 2002, after the waste was transferred. **A total of 1 Kgallon was pumped in December 2002; a total of 121 Kgallons has been pumped from this tank since the start of pumping in August 1995.**

Tank C-103 - Pumping began November 29, 2002, approximately five months ahead of schedule. **A total of 103 Kgallons was pumped in December 2002; a total of 107 Kgallons has been pumped from this tank since the start of pumping in November 2002.**

Tank S-101 - Pumping began July 27, 2002. Pumping was shut down on August 7, 2002 in support of S-107 field work. No pumping occurred in September 2002. A total of 16 Kgallons was pumped in October 2002; a total of 25 Kgallons has been pumped from this tank since the start of pumping in July 2002. Pumping was shut down October 23, 2002, and remains shut down until troubleshooting is completed (see Table B-1 footnotes for further information).

Tank S-102 - Pumping problems have forced many shutdowns. The pump was replaced and pumping resumed on February 19, 2000. Problems with the new pump forced a shutdown on March 23, 2000. Pumping was interrupted in early June 2000. Pumping was shut down due to equipment failure; the lower piping needed to be replaced. No pumping occurred until May 12, 2002, when pumping resumed. Pumping was manually shut down May 18, 2002 (see Table B-1 footnotes). Pumping started again on June 30, 2002, but the water added for pump priming/equipment flushes resulted in 0 Kgallons pumped in June 2002. A total of 1 Kgallon was pumped in October 2002; a total of 62 Kgallons has been pumped from this tank since the start of pumping in March 1999. A letter was sent to DOE-ORP in October 2002, requesting that this tank be removed from the Consent Decree stabilization requirements, and that the tank be considered for accelerated retrieval of the waste. See Table B-1 footnotes (top of page B-8) for more information.

Tank S-107 - Pumping began September 4, 2002. **Pumping was shut down on October 17, 2002, and was restarted on December 28, 2002. From December 28 through December 31, 2002, alarming from various sources resulted in shutdowns (and subsequent restarts). A total of 1 Kgallon was pumped in December 2002; a total of 36 Kgallons has been pumped from this tank since the start of pumping in September 2002.**

Tank S-111 - Pumping resumed December 18, 2001. (3 Kgallons were pumped in October 1975). The pump was shut down May 18, 2002 (see Table B-1 footnotes). Pumping started again on June 30, 2002, but the water added for pump priming/equipment flushes resulted in 0 Kgallons pumped in June 2002. **A total of 4 Kgallons was pumped in December 2002; a total of 61 Kgallons has been pumped from this tank since the start of pumping in October 1975 (includes 3 Kgallons pumped in 1975).**

Tank S-112 - Pumping resumed September 21, 2002. (125 Kgallons were pumped in August 1978.) A total of 5 Kgallons was pumped in October 2002; a total of 133 Kgallons has been pumped from this tank since the start of pumping in August 1978. A letter was sent to

DOE-ORP in October 2002, requesting that this tank be removed from the Consent Decree stabilization requirements, and that the tank be considered for accelerated retrieval of the waste. See Table B-1 footnotes (top of page B-8) for more information.

Tank SX-101 - Pumping began November 22, 2000. The pump failed on December 9, 2000, and pumping was shut down. Pumping resumed in September 2001 following replacement of the saltwell pump and lower piping. Pumping was shut down in November 2001 due to a high motor bearing temperature and low pump pressures. A total of 32 Kgallons has been pumped from this tank since the start of pumping in November 2000. No pumping has occurred since November 2001. Saltwell pumping of all SX farm tanks was suspended on January 9, 2002, due to a leak in the hose-in-hose transfer line. Pumping was attempted in July 2002; jet pump is plugged. The jet pump is scheduled to be replaced in January 2003.

Tank SX-102 - Pumping began December 15, 2001; a total of 1 Kgallon was pumped. During January 2002, there was a net removal of 0 Kgallons of waste. Saltwell pumping of all SX farm tanks was suspended January 9, 2002, due to a leak in the hose-in-hose transfer line. Pumping resumed in July 2002 through another transfer line; pumping was shut down on August 14, 2002. Pumping was restarted in September 2002. A total of 4 Kgallons was pumped in October 2002; a total of 43 Kgallons has been pumped since the start of pumping in December 2001. Pumping was shut down on October 23, 2002, for a control system problem. **An automatic filling dilution tank system was installed and operating procedures are being updated. The pump is not available for restart until January 2003.**

Tank SX-103 - Pumping began October 26, 2000. Pumping was shut down on April 22, 2001, due to leak detector and subsequent shielding problems in the pump pit. Pumping resumed on September 14, 2001 and was shut down on November 16, 2001. No pumping occurred between November 2001 and July 2002. Pumping was shut down on August 14, 2002. Pumping was restarted on September 1, 2002, and shut down on September 17, 2002; a total of 1 Kgallon was pumped in September 2002; a total of 134 Kgallons has been pumped from this tank since the start of pumping in October 2000.

This tank was placed under evaluation for meeting Interim Stabilization criteria on September 17, 2002.

Tank U-107 - Pumping began September 29, 2001. Pumping was shut down in November 2001 until a pressure test requirement was met. No pumping occurred between November 2001 and June 2002. Pumping was restarted June 28, 2002. Pumping was shut down on September 11, 2002. The pump failed, and was replaced October 21, 2002. A letter was sent to DOE-ORP in October 2002, requesting that this tank be removed from the Consent Decree stabilization requirements, and that the tank be considered for accelerated retrieval of the waste. See Table B-1 footnotes (top of page B-8) for further information. **A total of 70 gallons was pumped on December 1 and 2, 2002; a total of 92 Kgallons has been pumped from this tank since the start of pumping in September 2001.**

Saltcake dissolution began on December 3, 2002; any additional pumping is associated with retrieval and will not be included in interim stabilization pumping volumes. A total of

4.7 Kgallons of dissolution water, and a total of 1.9 Kgallons of system and dilution water, were added in December 2002; pumping resulted in a net removal of 1.5 Kgallons of waste.

Tank U-108 – Pumping began December 2, 2001. Pumping was shut down due to a partially plugged transfer line. Pumping was restarted briefly on May 18, 2002. The pump shut down several times due to alarming; various Trouble Alarms were intermittently activated from May 18 through May 31, 2002. (See Table B-1 footnotes for further information). The pump was restarted June 24, 2002, but was shut down due to transfer line flow restrictions. Pumping resumed in July 2002, and was shut down on September 30, 2002, for a planned SY farm exhauster outage. Pumping resumed on October 10, 2002. **A total of 4 Kgallons was pumped in December 2002; a total of 53 Kgallons has been pumped from this tank since the start of pumping in December 2001.**

Tank U-111 - Pumping began June 14, 2002. **A total of 4 Kgallons was pumped in December 2002; a total of 84 Kgallons has been pumped from this tank since the start of pumping in June 2002.**

B. Demonstration Project to Dissolve Deposits of Solid Waste

A proof-of-concept demonstration of technology to dissolve deposits of solid radioactive waste in Single-Shell Tank U-107 began on December 3, 2002. At the start of the test this tank contained approximately 320 Kgallons of non-liquid waste. The technology being tested involves dissolving the saltcake with gentle sprays of water and pumping out the dissolved solids as supernatant. Approximately 100 Kgallons of saltcake are expected to be removed in this demonstration. Saltcake dissolution technology is one of the methods being considered for waste retrieval prior to tank closure.

C. Pump Replacement to Aid Acceleration of Glassification

The transfer pump in Double-Shell Tank AP-101 was replaced in December 2002 by a much larger pump. The replacement pump is expected to bring the transfer of tank waste to the glassification plant one step closer. Tank AP-101 is the first tank scheduled to transfer low-activity waste to the Waste Treatment Plant for glassification. The pump replacement project was completed more than six months ahead of schedule.

This page intentionally left blank.

APPENDIX A

DOUBLE-SHELL TANKS

MONTHLY SUMMARY TABLES

TABLE A-1. INVENTORY AND STATUS BY TANK - DOUBLE-SHELL TANKS

December 31, 2002

						WASTE VOLUMES				LAST SAMPLING EVENT			
TANK	TANK INTEGRITY	WASTE TYPE	EQUIVA-LENT WASTE INCHES	TOTAL WASTE (Kgal)	AVAIL. SPACE (1) (Kgal)	SUPER-NATANT LIQUID (Kgal)	SLUDGE (Kgal)	SALTCAKE (Kgal)	SOLIDS VOLUME UPDATE	LAST CORE SAMPLE	LAST GRAB SAMPLE	LAST VAPOR SAMPLE	SEE FOOTNOTES FOR THESE CHANGES
						AN TANK FARM STATUS							
AN-101	SOUND	DN	92.0	253	891	253	0	0	06/30/99		10/02	04/01	
AN-102	SOUND	CC	391.6	1077	67	943	0	134	12/31/02	06/90	05/02		(a)
AN-103	SOUND	DSS	348.4	958	186	499	0	459	06/30/99	02/00	09/95		
AN-104	SOUND	DSSF	383.3	1054	90	609	0	445	06/30/99	08/00			
AN-105	SOUND	DSSF	409.8	1127	17	618	0	509	06/30/99	12/01			
AN-106	SOUND	CC	56.7	156	988	139	0	17	06/30/99		07/02	06/01	
AN-107	SOUND	CC	393.8	1083	61	846	0	237	09/30/02	10/02	08/02	12/94	
7 DOUBLE-SHELL TANKS			TOTALS:	5708	2300	3907	0	1801					
						AP TANK FARM STATUS							
AP-101	SOUND	DSSF	404.7	1113	31	1113	0	0	05/01/89		02/00	07/01	
AP-102	SOUND	DN	417.5	1148	13	1125	23	0	05/31/02		12/01	03/01	(b)
AP-103	SOUND	CC	102.5	282	862	282	0	0	05/31/96		10/02		
AP-104	SOUND	CC	401.8	1105	39	1105	0	0	10/13/88		01/01	11/00	
AP-105	SOUND	DSSF	411.3	1131	13	1042	0	89	06/30/99	03/02	09/96		
AP-106	SOUND	CP	414.2	1139	5	1139	0	0	10/13/88		05/98	05/01	
AP-107	SOUND	DN	408.0	1122	22	1122	0	0	10/13/88		07/02		
AP-108	SOUND	DN	93.8	258	886	258	0	0	10/13/88		10/02		
8 DOUBLE-SHELL TANKS			TOTALS:	7298	1871	7186	23	89					
						AW TANK FARM STATUS							
AW-101	SOUND	DSSF	410.2	1128	16	732	0	396	12/31/02	05/96	07/00		
AW-102	SOUND	EVFD	346.9	954	171	924	30	0	01/31/01		12/02		
AW-103	SOUND	DSSF/NCRW	400.0	1100	44	787	273	40	06/30/99	09/99	09/94		
AW-104	SOUND	DN	113.5	312	832	89	66	157	06/30/99	09/01	08/00		
AW-105	SOUND	DN/NCRW	153.8	423	721	160	263	0	06/30/99	09/01	08/96		
AW-106	SOUND	SRCVR	325.5	895	249	656	0	239	06/30/99	03/01	12/02		
6 DOUBLE-SHELL TANKS			TOTALS:	4812	2033	3348	632	832					

TABLE A-1. INVENTORY AND STATUS BY TANK - DOUBLE-SHELL TANKS

December 31, 2002

						WASTE VOLUMES				LAST SAMPLING EVENT			
TANK	TANK INTEGRITY	WASTE TYPE	EQUIVA-LENT WASTE INCHES	TOTAL WASTE (Kgal)	AVAIL. SPACE (1) (Kgal)	SUPER-NATANT LIQUID (Kgal)	SLUDGE (Kgal)	SALTCAKE (Kgal)	SOLIDS VOLUME UPDATE	LAST CORE SAMPLE	LAST GRAB SAMPLE	LAST VAPOR SAMPLE	SEE FOOTNOTES FOR THESE CHANGES
						AY TANK FARM STATUS							
AY-101	SOUND	DC	65.5	180	821	84	96	0	06/30/99	04/02	02/01		
AY-102	SOUND	DN	247.6	681	320	510	171	0	07/31/02	04/02	11/02	12/98	
2 DOUBLE-SHELL TANKS			TOTALS:	861	1141	594	267	0					
						AZ TANK FARM STATUS							
AZ-101	SOUND	AW	361.5	994	7	942	52	0	06/30/98	08/00	06/00	04/00	
AZ-102	SOUND	AW	359.3	988	13	883	105	0	06/30/99	07/02	10/01		
2 DOUBLE-SHELL TANKS			TOTALS:	1982	20	1825	157	0					
						SY TANK FARM STATUS							
SY-101	SOUND	CC	407.3	1120	24	845	0	275	06/30/99	03/99	11/02		
SY-102	SOUND	DN/PT	236.4	650	478	505	145	0	06/30/99	11/00	12/02	09/00	
SY-103	SOUND	CC	267.3	735	409	393	0	342	06/30/99	03/00			
3 DOUBLE-SHELL TANKS			TOTALS:	2505	911	1743	145	617					
GRAND TOTAL				23166	8276	18603	1224	3339					

Note: +/- 1 Kgal differences are the result of computer rounding

Maximum volume limits per OSD-T-151-00007, "Operating Specifications for Double-Shell Storage Tanks," Rev. I-0, dated October 2002.

Tank Farms		Exceptions:		
AN	1144 Kgal			Per PM-02-060, 12/02 - see below
AP	1144 Kgal	AP-102	1161 Kgal	
AW	1144 Kgal	AW-102	1125 Kgal	
AY, AZ	1001 Kgal			
SY	1144 Kgal	SY-102	1128 Kgal	

NOTE: Supernatant + Sludge (includes liquid) + Saltcake (includes liquid) = Total Waste

(1) Available Space volumes include restricted space

(a) BBI quarterly review resulted in changes to AN-102 (saltcake decreased and supernatant increased by 6 Kgal), effective December 31, 2002.

(b) Maximum Operating Liquid Level was changed from 1144 Kgal to 1161 Kgal for Tank AP-102, per Process Memo PM-02-060, dated December 2002.

TABLE A-2. DOUBLE-SHELL TANK SPACE ALLOCATION, INVENTORY AND WASTE RECEIPTS (ALL VOLUMES IN KGALS)

December 31, 2002

TOTAL DST CAPACITY	
(**)NON-AGING =	27,438
AGING =	4,004
TOTAL=	31,442

MONTHLY INVENTORY CHANGE	
INVENTORY ON 12/31/02	23,167
INVENTORY ON 11/30/02	22,970
CHANGE =	197

CALCULATION OF REMAINING SPACE	
TOTAL DST CAPACITY =	31,442
WASTE INVENTORY =	-23,167
DEDICATED OPERATIONAL SPACE =	-1,899
(*) RESTRICTED USAGE SPACE =	-2,090
EMERGENCY SPACE ALLOCATION =	-1,144
SPACE ALLOCATED FOR WASTE TREATMENT PLANT RETURNS =	-1,144
REMAINING AVAILABLE SPACE =	1,998

(*) Restricted Usage Space Adjusted in December 2002 to align with DOE requirements on Restricted Usage Space.
(**) Tank AP-102 Maximum Operating Liquid Level increased from 1144 to 1161 Kgallons in December 2002.

DECEMBER DST WASTE RECEIPTS					
FACILITY GENERATIONS		OTHER GAINS ASSOCIATED WITH		OTHER LOSSES ASSOCIATED WITH	
SALTWELL LIQUID (WEST)	19	SLURRY	1	SLURRY	-3
(*)SALTWELL LIQUID (EAST)	139	CONDENSATE	7	CONDENSATE	-4
TANK FARMS	9	INSTRUMENTATION	0	INSTRUMENTATION	0
X-Site Transfer (Water)	22	UNKNOWN	1	UNKNOWN	-18
244S (222S Lab Waste)	13	TOTAL=	9	TOTAL=	-25
U-107 Dissolution	11				
TOTAL =	213				

(*) Does not include BY-106 transfer to 244-BX (1 Kgal); Does include transfer of 244-BX to AP-102 (15 Kgals).

PROJECTED VERSUS ACTUAL WASTE VOLUMES						
	ACTUAL DST WASTE RECEIPTS	PROJECTED DST WASTE RECEIPTS (1)	MISC. DST CHANGES (+/-)	PROJECTED WVR	NET DST CHANGE	TOTAL DST VOLUME
10/02	119	N/A	-18	0	101	23,292
11/02	106	N/A	-11	-417	-322	22,970
12/02	213	N/A	-16	0	197	23,167
01/03	0	N/A	0	0	0	23,167
02/03	0	N/A	0	0	0	23,167
03/03	0	N/A	0	0	0	23,167
04/03	0	N/A	0	0	0	23,167
05/03	0	N/A	0	0	0	23,167
06/03	0	N/A	0	0	0	23,167
07/03	0	N/A	0	0	0	23,167
08/03	0	N/A	0	0	0	23,167
09/03	0	N/A	0	0	0	23,167

(1) The "PROJECTED DST WASTE RECEIPTS" and "WVR" numbers will be updated once the Performance Based Incentive (PBI) agreement is in place with processing schedules and assumptions defined.
(2) Total Waste Volume Reduction (WVR) through the 242A Evaporator since restart on 4/15/94 = 12,085 Kgals

TABLE A-3. DOUBLE-SHELL TANKS MONITORING FREQUENCY STATUS (28 Tanks)

December 31, 2002

Legend:	
E	ENRAF Level Gauge
D, W, Q	Daily, Weekly, Quarterly

All data were collected in accordance with Technical Safety Requirement (TSR) and Operating Specification Documents (OSD).

Tank	Surface Level Device (1)	Frequency	Thermocouple Tree Risers (2)	Temperature Frequency	Annulus Leak Detector Probes	Leak Detector Frequency
AN-101	E	D	4A*	W	3	D
AN-102	E	D	4A*	W	3	D
AN-103	E	D	4A*, 15A*	W	3	D
AN-104	E	D	4A*, 15A*	W	3	D
AN-105	E	D	4A*, 15A*	W	3	D
AN-106	E	D	4A*	W	3	D
AN-107	E	D	4A*	W	3	D
AP-101	E	D	4	W	3	D
AP-102	E	D	4	W	3	D
AP-103	E	D	4	W	3	D
AP-104	E	D	4	W	3	D
AP-105	E	D	4	W	3	D
AP-106	E	D	4	W	3	D
AP-107	E	D	4	W	3	D
AP-108	E	D	4	W	3	D
AW-101	E	D	6*, 17*	W	3	D
AW-102	E	D	6*	W	3	D
AW-103	E	D	6*	W	3	D
AW-104	E	D	6*	W	3	D
AW-105	E	D	6*	W	3	D
AW-106	E	D	6*	W	3	D
AY-101	E	D	Multiple*	W	3	D
AY-102	E	D	Multiple*	W	3	D
AZ-101	E	D	Multiple*	W	3	D
AZ-102	E	D	Multiple*	W	3	D
SY-101	E	D	17B*, 17C*	W	3	D
SY-102	E	D	4A*	W	3	D
SY-103	E	D	4A*, 17B*	W	3	D

Footnotes:

1. All DST ENRAFs are connected to TMACS for continuous remote monitoring. All equipment connected to TMACS collects data multiple times per day regardless of required frequency.
2. *Thermocouple tree risers followed by an asterisk (*) are connected to TMACS for continuous* remote monitoring. AY and AZ farms have too many thermocouple elements to list individually. Most are monitored electronically.

This page intentionally left blank.

APPENDIX B

SINGLE-SHELL TANKS

MONTHLY SUMMARY TABLES

TABLE B-1. INVENTORY AND STATUS BY TANK - SINGLE-SHELL TANKS

December 31, 2002

The SST volume estimates were derived from the Best-Basis Inventory baselining task, dated January 1, 2002, and represent the official waste volume estimates for Hanford's waste storage tanks. The interstitial liquid estimates for pumpable liquid remaining (PLR) and drainable linterstitial liquid (DIL) were calculated from these volumes using the waste phase drainable porosities per Updated Liquid Volume Estimates (HNF-2978 and RPP-5556).

BBI quarterly review resulted in changes to tanks A-101 and AX-101, effective December 31, 2002. These tanks no longer contain Retained Gas.

Sludge and Saltcake volumes include Retained Gas, with the exception of A-101 and AX-101.

				WASTE VOLUMES									PHOTOS/VIDEOS		
TANK NO.	TANK INTEGRITY	TANK STATUS	TOTAL WASTE (Kgal)	SUPER-NATANT LIQUID (Kgal)	DRAINABLE INTERSTITIAL LIQUID (Kgal)	PUMPED THIS MONTH (Kgal)	TOTAL PUMPED (Kgal)	DRAINABLE LIQUID REMAINING (Kgal)	PUMPABLE LIQUID REMAINING (Kgal)	SLUDGE (Kgal)	SALT CAKE (Kgal)	SOLIDS VOLUME UPDATE	LAST IN-TANK PHOTO	LAST IN-TANK VIDEO	SEE FOOTNOTES FOR THESE CHANGES
							A TANK FARM STATUS								
A-101	SOUND	/PI	399	-	-	2	508	-	-	3	395	12/31/02	08/21/85		(a)
A-102	SOUND	IS/PI	38	2	9	0	40	11	2	0	36	01/01/02	07/20/89		
A-103	ASMD LKR	IS/IP	370	4	87	0	111	91	84	2	364	01/01/02	12/28/88		
A-104	ASMD LKR	IS/IP	28	0	0	0	0	4	0	28	0	01/27/78	06/25/86		
A-105	ASMD LKR	IS/IP	37	0	0	0	0	0	0	37	0	10/31/00	08/20/86		
A-106	SOUND	IS/IP	79	0	9	0	0	9	1	50	29	01/01/02	08/19/86		
6 TANKS - TOTALS			951							120	824				
							AX TANK FARM STATUS								
AX-101	SOUND	/PI	327	-	-	3	360	-	-	3	324	12/31/02	08/18/87		(b)
AX-102	ASMD LKR	IS/IP	30	0	0	0	13	0	0	6	24	01/01/02	06/05/89		
AX-103	SOUND	IS/IP	108	0	22	0	0	22	10	8	100	01/01/02	08/13/87		
AX-104	ASMD LKR	IS/IP	7	0	0	0	0	0	0	7	0	01/01/02	08/18/87		
4 TANKS - TOTALS			472							24	448				
							B TANK FARM STATUS								
B-101	ASMD LKR	IS/IP	109	0	20	0	0	20	16	28	81	01/01/02	05/19/83		
B-102	SOUND	IS/IP	32	4	7	0	0	11	4	0	28	06/30/99	08/22/85		
B-103	ASMD LKR	IS/IP	56	0	10	0	0	10	2	1	55	01/01/02	10/13/88		
B-104	SOUND	IS/IP	374	0	45	0	0	45	41	309	65	01/01/02	10/13/88		
B-105	ASMD LKR	IS/IP	290	0	20	0	0	20	16	28	262	01/01/02	05/19/88		
B-106	SOUND	IS/IP	122	1	8	0	0	9	2	121	0	01/01/02	02/28/85		
B-107	ASMD LKR	IS/IP	161	0	23	0	0	23	18	86	75	01/01/02	02/28/85		
B-108	SOUND	IS/IP	92	0	19	0	0	19	15	27	65	01/01/02	05/10/85		
B-109	SOUND	IS/IP	125	0	23	0	0	23	19	50	75	01/01/02	04/02/85		
B-110	ASMD LKR	IS/IP	245	1	27	0	0	28	23	244	0	01/01/02	03/17/88		
B-111	ASMD LKR	IS/IP	242	1	23	0	0	24	20	241	0	01/01/02	06/26/85		
B-112	ASMD LKR	IS/IP	35	3	2	0	0	5	1	15	17	01/01/02	05/29/85		
B-201	ASMD LKR	IS/IP	30	0	5	0	0	5	0	30	0	01/01/02	11/12/86	06/23/95	
B-202	SOUND	IS/IP	29	0	4	0	0	4	0	29	0	01/01/02	05/29/85	06/15/95	
B-203	ASMD LKR	IS/IP	52	1	5	0	0	6	1	51	0	01/01/02	11/13/86		
B-204	ASMD LKR	IS/IP	51	1	5	0	0	6	1	50	0	01/01/02	10/22/87		
16 TANKS - TOTALS			2045							1310	723				

TABLE B-1. INVENTORY AND STATUS BY TANK - SINGLE-SHELL TANKS

December 31, 2002

The SST volume estimates were derived from the Best-Basis Inventory baselining task, dated January 1, 2002, and represent the official waste volume estimates for Hanford's waste storage tanks. The interstitial liquid estimates for pumpable liquid remaining (PLR) and drainable interstitial liquid (DIL) were calculated from these volumes using the waste phase drainable porosities per Updated Liquid Volume Estimates (HNF-2978 and RPP-5556).

BBI quarterly review resulted in changes to tank BY-106, effective December 31, 2002.

Sludge and Saltcake volumes include Retained Gas.

				WASTE VOLUMES									PHOTOS/VIDEOS		
TANK NO.	TANK INTEGRITY	TANK STATUS	TOTAL WASTE (Kgal)	SUPER-NATANT LIQUID (Kgal)	DRAINABLE INTERSTITIAL LIQUID (Kgal)	PUMPED THIS MONTH (Kgal)	TOTAL PUMPED (Kgal)	DRAINABLE LIQUID REMAINING (Kgal)	PUMPABLE LIQUID REMAINING (Kgal)	SLUDGE (Kgal)	SALT CAKE (Kgal)	SOLIDS VOLUME UPDATE	LAST IN-TANK PHOTO	LAST IN-TANK VIDEO	SEE FOOTNOTES FOR THESE CHANGES
							BX TANK FARM STATUS								
BX-101	ASMD LKR	IS/P/CCS	48	0	4	0	0	4	0	48	0	01/01/02	11/24/88	11/10/94	
BX-102	ASMD LKR	IS/P/CCS	112	0	0	0	0	0	0	112	0	04/28/82	09/18/85		
BX-103	SOUND	IS/P/CCS	73	11	4	0	0	15	11	62	0	11/29/83	10/31/86	10/27/94	
BX-104	SOUND	IS/P/CCS	100	3	4	0	17	7	3	97	0	01/01/02	09/21/89		
BX-105	SOUND	IS/P/CCS	72	5	4	0	15	9	5	67	0	01/01/02	10/23/86		
BX-106	SOUND	IS/P/CCS	38	0	4	0	14	4	0	38	0	08/01/95	05/19/88	07/17/95	
BX-107	SOUND	IS/P/CCS	347	0	37	0	23	37	33	347	0	09/18/90	09/11/90		
BX-108	ASMD LKR	IS/P/CCS	31	0	4	0	0	4	0	31	0	01/31/01	05/05/94		
BX-109	SOUND	IS/P/CCS	193	0	25	0	8	25	20	193	0	09/17/90	09/11/90		
BX-110	ASMD LKR	IS/P/CCS	205	1	35	0	2	36	31	65	139	01/01/02	07/15/94	10/13/94	
BX-111	ASMD LKR	IS/P/CCS	189	0	6	0	117	6	2	32	157	01/01/02	05/19/94	02/28/95	
BX-112	SOUND	IS/P/CCS	164	1	9	0	4	10	7	163	0	01/01/02	09/11/90		
12 TANKS - TOTALS			1572							1255	296				
							BY TANK FARM STATUS								
BY-101	SOUND	IS/P	370	0	24	0	36	24	20	37	333	01/01/02	09/19/89		
BY-102	SOUND	IS/PI	277	0	40	0	159	40	33	0	277	05/01/95	09/11/87	04/11/95	
BY-103	ASMD LKR	IS/PI	416	0	58	0	96	58	53	9	407	01/01/02	09/07/89	02/24/97	
BY-104	SOUND	IS/P	358	0	51	0	330	51	46	45	313	01/01/02	04/27/83		
BY-105	ASMD LKR	/PI	458	-	-	0	45	-	-	48	410	09/30/02	07/01/86		(c)
BY-106	ASMD LKR	/PI	504	-	-	1	121	-	-	32	472	12/31/02	11/04/82		(d)
BY-107	ASMD LKR	IS/P	272	0	42	0	56	42	37	15	257	01/01/02	10/15/86		
BY-108	ASMD LKR	IS/P	222	0	33	0	28	33	26	40	182	01/01/02	10/15/86		
BY-109	SOUND	IS/PI	277	0	37	0	157	37	32	24	253	01/01/02	06/18/97		
BY-110	SOUND	IS/P	366	0	20	0	213	20	15	43	323	01/01/02	07/26/84		
BY-111	SOUND	IS/P	302	0	14	0	313	14	6	0	302	01/01/02	10/31/86		
BY-112	SOUND	IS/P	286	0	24	0	116	24	12	2	284	03/31/02	04/14/88		
12 TANKS - TOTALS			4108							295	3813				

TABLE B-1. INVENTORY AND STATUS BY TANK - SINGLE-SHELL TANKS

December 31, 2002

The SST volume estimates were derived from the Best-Basis Inventory baselining task, dated January 1, 2002, and represent the official waste volume estimates for Hanford's waste storage tanks. The interstitial liquid estimates for pumpable liquid remaining (PLR) and drainable interstitial liquid (DIL) were calculated from these volumes using the waste phase drainable porosities per Updated Liquid Volume Estimates (HNF-2978 and RPP-5556)

BBI quarterly review resulted in changes to tanks C-103, S-101, S-102, and S-111, effective December 31, 2002. (S-107 also reviewed, no changes resulted)

Sludge and Saltcake volumes include Retained Gas. Tank Status for C-104, C-202 through C-204, S-102, S-103, S-105, and S-106 changed to "Retrieval."

				WASTE VOLUMES									PHOTOS/VIDEOS		
TANK NO.	TANK INTEGRITY	TANK STATUS	TOTAL WASTE (Kgal)	SUPER-NATANT LIQUID (Kgal)	DRAINABLE INTERSTITIAL LIQUID (Kgal)	PUMPED THIS MONTH (Kgal)	TOTAL PUMPED (Kgal)	DRAINABLE LIQUID REMAINING (Kgal)	PUMPABLE LIQUID REMAINING (Kgal)	SLUDGE (Kgal)	SALT CAKE (Kgal)	SOLIDS VOLUME UPDATE	LAST IN-TANK PHOTO	LAST IN-TANK VIDEO	SEE FOOTNOTES FOR THESE CHANGES
							C TANK FARM STATUS								
C-101	ASMD LKR	IS/IP	88	0	4	0	0	4	0	88	0	11/29/83	11/17/87		
C-102	SOUND	IS/IP	316	0	62	0	47	62	55	316	0	09/30/95	05/18/76	08/24/95	
C-103	SOUND	/PI	96	-	-	103	107	-	-	96	0	12/31/02	07/28/87		(e)
C-104	SOUND	IS/R	259	0	29	0	0	29	25	259	0	01/01/02	07/25/90		
C-105	SOUND	IS/PI	132	0	10	0	0	10	6	132	0	02/29/00	08/05/94	08/30/95	
C-106	SOUND	/PI	36	30	1	0	0	31	27	6	0	10/31/99	08/05/94	08/08/94	
C-107	SOUND	IS/IP	248	0	30	0	41	30	25	248	0	01/01/02	00/00/00		
C-108	SOUND	IS/IP	66	0	4	0	0	4	0	66	0	02/24/84	12/05/74	11/17/94	
C-109	SOUND	IS/IP	63	0	4	0	0	4	0	63	0	01/01/02	01/30/76		
C-110	ASMD LKR	IS/IP	178	1	37	0	16	38	30	177	0	06/14/95	08/12/86	05/23/95	
C-111	ASMD LKR	IS/IP	57	0	4	0	0	4	0	57	0	04/28/82	02/25/70	02/02/95	
C-112	SOUND	IS/IP	104	0	6	0	0	6	1	104	0	09/18/90	09/18/90		
C-201	ASMD LKR	IS/R	1	0	0	0	0	0	0	1	0	01/01/02	12/02/86		
C-202	ASMD LKR	IS/R	1	0	0	0	0	0	0	1	0	01/19/79	12/09/86		
C-203	ASMD LKR	IS/R	3	0	0	0	0	0	0	3	0	01/01/02	12/09/86		
C-204	ASMD LKR	IS/R	3	0	0	0	0	0	0	3	0	04/28/82	12/09/86		
16 TANKS - TOTALS			1651							1620	0				
							S TANK FARM STATUS								
S-101	SOUND	/PI	399	-	-	0	25	-	-	122	277	12/31/02	03/18/88		(f)
S-102	SOUND	/R	439	-	-	0	62	-	-	22	417	12/31/02	03/18/88		(g)
S-103	SOUND	IS/R	237	1	45	0	24	46	39	9	227	03/24/00	06/01/89	01/28/00	
S-104	ASMD LKR	IS/IP	288	0	49	0	0	49	45	132	156	12/20/84	12/12/84		
S-105	SOUND	IS/R	406	0	42	0	114	42	33	2	404	01/01/02	04/12/89		
S-106	SOUND	IS/R	455	0	26	0	204	26	18	0	455	02/28/01	03/17/89	01/28/00	
S-107	SOUND	/PI	340	-	-	1	36	-	-	320	20	12/31/02	03/12/87		(h)
S-108	SOUND	IS/PI	550	0	4	0	200	4	0	5	545	01/01/02	03/12/87	12/03/96	
S-109	SOUND	IS/PI	533	0	16	0	34	16	12	13	520	06/30/01	12/31/98		
S-110	SOUND	IS/PI	389	0	30	0	203	30	27	96	293	01/01/02	03/12/87	12/11/96	
S-111	SOUND	/PI	479	-	-	4	61	-	-	89	390	12/31/02	08/10/89		(i)
S-112	SOUND	/PI	615	-	-	0	133	-	-	6	609	10/31/02	03/24/87		(j)
12 TANKS - TOTALS			5130							816	4313				

TABLE B-1. INVENTORY AND STATUS BY TANK - SINGLE-SHELL TANKS

December 31, 2002

The SST volume estimates were derived from the Best-Basis Inventory baselining task, dated January 1, 2002, and represent the official waste volume estimates for Hanford's waste storage tanks. The interstitial liquid estimates for pumpable liquid remaining (PLR) and drainable interstitial liquid (DIL) were calculated from these volumes using the waste phase drainable porosities per Updated Liquid Volume Estimates (HNF-2978 and RPP-5556).

BBI quarterly review resulted in changes to tank SX-105, effective December 31, 2002.

Sludge and Saltcake volumes include Retained Gas.

				WASTE VOLUMES									PHOTOS/VIDEOS		
TANK NO.	TANK INTEGRITY	TANK STATUS	TOTAL WASTE (Kgal)	SUPER-NATANT LIQUID (Kgal)	DRAINABLE INTERSTITIAL LIQUID (Kgal)	PUMPED THIS MONTH (Kgal)	TOTAL PUMPED (Kgal)	DRAINABLE LIQUID REMAINING (Kgal)	PUMPABLE LIQUID REMAINING (Kgal)	SLUDGE (Kgal)	SALT CAKE (Kgal)	SOLIDS VOLUME UPDATE	LAST IN-TANK PHOTO	LAST IN-TANK VIDEO	SEE FOOTNOTES FOR THESE CHANGES
							SX TANK FARM STATUS								
SX-101	SOUND	/PI	413	-	-	0	32	-	-	144	269	08/31/02	03/10/89		(k)
SX-102	SOUND	/PI	463	-	-	0	43	-	-	55	408	10/31/02	01/07/88		(l)
SX-103	SOUND	/PI	491	-	-	0	134	-	-	8	483	09/30/02	12/17/87		(m)
SX-104	ASMD LKR	IS/PI	446	0	48	0	231	48	39	136	310	04/30/00	09/08/88	02/04/98	
SX-105	SOUND	IS /PI	375	0	39	0	153	39	35	63	312	12/31/02	06/15/88		
SX-106	SOUND	IS/PI	397	0	37	0	148	37	31	0	397	05/30/00	06/01/89		
SX-107	ASMD LKR	IS/IP	95	0	7	0	0	7	3	79	16	01/01/02	03/06/87		
SX-108	ASMD LKR	IS/IP	73	0	0	0	0	0	0	73	0	01/01/02	03/06/87		
SX-109	ASMD LKR	IS/IP	241	0	0	0	0	0	0	58	183	01/01/02	05/21/86		
SX-110	ASMD LKR	IS/IP	56	0	0	0	0	0	0	29	27	01/01/02	02/20/87		
SX-111	ASMD LKR	IS/IP	115	0	11	0	0	11	7	76	39	01/01/02	06/09/94		
SX-112	ASMD LKR	IS/IP	75	0	6	0	0	6	2	56	19	01/01/02	03/10/87		
SX-113	ASMD LKR	IS/IP	19	0	0	0	0	0	0	19	0	01/01/02	03/18/88		
SX-114	ASMD LKR	IS/IP	157	0	30	0	0	30	26	42	115	01/01/02	02/26/87		
SX-115	ASMD LKR	IS/IP	4	0	0	0	0	0	0	4	0	01/01/02	03/31/88		
15 TANKS - TOTALS:			3420							842	2578				
							T TANK FARM STATUS								
T-101	ASMD LKR	IS/PI	100	0	16	0	25	16	12	37	63	01/01/02	04/07/93		
T-102	SOUND	IS/IP	32	13	3	0	0	16	13	19	0	08/31/84	06/28/89		
T-103	ASMD LKR	IS/IP	27	4	3	0	0	7	4	23	0	11/29/83	07/03/84		
T-104	SOUND	IS/PI	317	0	31	0	150	31	27	317	0	11/30/99	06/29/89	10/07/99	
T-105	SOUND	IS/IP	98	0	5	0	0	5	0	98	0	05/29/87	05/14/87		
T-106	ASMD LKR	IS/IP	22	0	0	0	0	0	0	22	0	01/01/01	06/29/89		
T-107	ASMD LKR	IS/PI	173	0	34	0	11	34	28	173	0	05/31/96	07/12/84	05/09/96	
T-108	ASMD LKR	IS/IP	16	0	4	0	0	4	0	5	11	01/01/01	07/17/84		

TABLE B-1. INVENTORY AND STATUS BY TANK - SINGLE-SHELL TANKS

December 31, 2002

The SST volume estimates were derived from the Best-Basis Inventory baselining task, dated January 1, 2002, and represent the official waste volume estimates for Hanford's waste storage tanks. The interstitial liquid estimates for pumpable liquid remaining (PLR) and drainable interstitial liquid (DIL) were calculated from these volumes using the waste phase drainable porosities per Updated Liquid Volume Estimates (HNF-2978 and RPP 5556).

BBI quarterly review resulted in changes to tank TX-116, effective December 31, 2002.

Sludge and Saltcake volumes include Retained Gas.

				WASTE VOLUMES									PHOTOS/VIDEO		
TANK NO.	TANK INTEGRITY	TANK STATUS	TOTAL WASTE (Kgal)	SUPER-NATANT LIQUID (Kgal)	DRAINABLE INTERSTITIAL LIQUID (Kgal)	PUMPED THIS MONTH (Kgal)	TOTAL PUMPED (Kgal)	DRAINABLE LIQUID REMAINING (Kgal)	PUMPABLE LIQUID REMAINING (Kgal)	SLUDGE (Kgal)	SALT CAKE (Kgal)	SOLIDS VOLUME UPDATE	LAST IN-TANK PHOTO	LAST IN-TANK VIDEO	SEE FOOTNOTES FOR THESE CHANGES
T-109	ASMD LKR	IS/IP	62	0	11	0	0	11	4	0	62	01/01/02	02/25/93		
T-110	SOUND	IS/PI	370	1	48	0	50	48	43	369	0	03/31/02	07/12/84	10/07/99	
T-111	ASMD LKR	IS/PI	447	0	38	0	10	38	35	447	0	01/01/02	04/13/94	02/13/95	
T-112	SOUND	IS/IP	67	7	4	0	0	11	7	60	0	04/28/82	08/01/84		
T-201	SOUND	IS/IP	31	2	4	0	0	6	2	29	0	01/01/02	04/15/86		
T-202	SOUND	IS/IP	21	0	3	0	0	3	0	21	0	07/12/81	07/06/89		
T-203	SOUND	IS/IP	37	0	5	0	0	5	0	37	0	01/01/02	08/03/89		
T-204	SOUND	IS/IP	37	0	5	0	0	5	0	37	0	01/01/02	08/03/89		
16 TANKS - TOTALS			1857							1694	136				
							TX TANK FARM STATUS								
TX-101	SOUND	IS/IP/CCS	91	0	7	0	0	7	3	74	17	01/01/02	10/24/85		
TX-102	SOUND	IS/IP/CCS	217	0	27	0	94	27	16	2	215	01/01/02	10/31/85		
TX-103	SOUND	IS/IP/CCS	145	0	18	0	68	18	11	0	145	01/01/02	10/31/85		
TX-104	SOUND	IS/IP/CCS	69	3	9	0	4	12	7	34	32	01/01/02	10/16/84		
TX-105	ASMD LKR	IS/IP/CCS	576	0	25	0	122	25	14	8	568	01/01/02	10/24/89		
TX-106	SOUND	IS/IP/CCS	348	0	37	0	135	37	30	5	343	03/31/02	10/31/85		
TX-107	ASMD LKR	IS/IP/CCS	30	0	7	0	0	7	0	0	30	01/01/02	10/31/85		
TX-108	SOUND	IS/IP/CCS	129	0	8	0	14	8	1	6	123	01/01/02	09/12/89		
TX-109	SOUND	IS/IP/CCS	363	0	6	0	72	6	2	363	0	01/01/02	10/24/89		
TX-110	ASMD LKR	IS/IP/CCS	467	0	14	0	115	14	10	37	430	01/01/02	10/24/89		
TX-111	SOUND	IS/IP/CCS	365	0	10	0	98	10	6	43	322	01/01/02	09/12/89		
TX-112	SOUND	IS/IP/CCS	634	0	26	0	94	26	21	0	634	01/01/02	11/19/87		
TX-113	ASMD LKR	IS/IP/CCS	639	0	18	0	19	18	14	93	546	01/01/02	04/11/83	09/23/94	
TX-114	ASMD LKR	IS/IP/CCS	532	0	17	0	104	17	11	4	528	01/01/02	04/11/83	02/17/95	
TX-115	ASMD LKR	IS/IP/CCS	554	0	25	0	99	25	15	8	546	01/01/02	06/15/88		
TX-116	ASMD LKR	IS/IP/CCS	598	0	21	0	24	21	17	66	532	12/31/02	10/17/89		
TX-117	ASMD LKR	IS/IP/CCS	481	0	10	0	54	10	5	29	452	01/01/02	04/11/83		
TX-118	SOUND	IS/IP/CCS	256	0	31	0	89	31	27	0	256	01/01/02	12/19/79		
18 TANKS - TOTALS			6494							772	5719				

TABLE B-1. INVENTORY AND STATUS BY TANK - SINGLE-SHELL TANKS

December 31, 2002

The SST volume estimates were derived from the Best-Basis Inventory baselining task, dated January 1, 2002, and represent the official waste volume estimates for Hanford's waste storage tanks. The interstitial liquid estimates for pumpable liquid remaining (PLR) and drainable interstitial liquid (DIL) were calculated from these volumes using the waste phase drainable porosities per Updated Liquid Volume Estimates (HNF-2978 and RPP-5556).

BBI quarterly review resulted in changes to tanks U-102, U-107, and U-111, effective December 31, 2002. (U-108 also reviewed, no changes resulted)

Sludge and Saltcake volumes include Retained Gas.

				WASTE VOLUMES									PHOTOS/VIDEOS		
TANK NO.	TANK INTEGRITY	TANK STATUS	TOTAL WASTE (Kgal)	SUPER-NATANT LIQUID (Kgal)	DRAINABLE INTERSTITIAL LIQUID (Kgal)	PUMPED THIS MONTH (Kgal)	TOTAL PUMPED (Kgal)	DRAINABLE LIQUID REMAINING (Kgal)	PUMPABLE LIQUID REMAINING (Kgal)	SLUDGE (Kgal)	SALT CAKE (Kgal)	SOLIDS VOLUME UPDATE	LAST IN-TANK PHOTO	LAST IN-TANK VIDEO	SEE FOOTNOTES FOR THESE CHANGES
							TY TANK FARM STATUS								
TY-101	ASMD LKR	IS/IP/CCS	118	0	2	0	8	2	0	72	46	06/30/99	08/22/89		
TY-102	SOUND	IS/IP/CCS	69	0	13	0	7	13	6	0	69	01/01/02	07/07/87		
TY-103	ASMD LKR	IS/IP/CCS	155	0	23	0	12	23	19	103	52	01/01/02	08/22/89		
TY-104	ASMD LKR	IS/IP/CCS	44	1	4	0	0	5	1	43	0	03/31/02	11/03/87		
TY-105	ASMD LKR	IS/IP/CCS	231	0	12	0	4	12	10	231	0	04/28/82	09/07/89		
TY-106	ASMD LKR	IS/IP/CCS	16	0	1	0	0	1	0	16	0	01/01/02	08/22/89		
6 TANKS - TOTALS			633							465	167				
							U TANK FARM STATUS								
U-101	ASMD LKR	IS/IP	24	0	4	0	0	4	0	24	0	01/01/02	06/19/79		
U-102	SOUND	IS /PI	327	1	37	0	87	38	34	43	283	12/31/02	06/08/89		
U-103	SOUND	IS/PI	417	1	33	0	99	34	28	11	405	12/31/02	09/13/88		
U-104	ASMD LKR	IS/IP	122	0	0	0	0	0	0	122	0	01/01/02	08/10/89		
U-105	SOUND	IS/PI	353	0	44	0	88	44	40	32	321	03/30/01	07/07/88		
U-106	SOUND	IS/PI	172	2	36	0	39	38	31	0	170	03/30/01	07/07/88		
U-107	SOUND	/PI	317	-	-	0	92	-	-	15	302	12/31/02	10/27/88		(n)
U-108	SOUND	/PI	415	-	-	4	53	-	-	29	386	12/31/02	09/12/84		(o)
U-109	SOUND	IS/PI	401	0	47	0	78	47	43	35	366	04/30/02	07/07/88		
U-110	ASMD LKR	IS/PI	176	0	16	0	0	16	1	176	0	01/01/02	12/11/84		
U-111	SOUND	/PI	256	-	-	4	84	-	-	25	231	12/31/02	06/23/88		(p)
U-112	ASMD LKR	IS/IP	45	0	4	0	0	4	0	45	0	02/10/84	08/03/89		
U-201	SOUND	IS/IP	5	1	1	0	0	2	1	4	0	08/15/79	08/08/89		
U-202	SOUND	IS/IP	4	1	0	0	0	1	1	3	0	01/01/02	08/08/89		
U-203	SOUND	IS/IP	4	1	0	0	0	1	1	3	0	01/01/02	06/13/89		
U-204	SOUND	IS/IP	4	1	0	0	0	1	1	3	0	01/01/02	06/13/89		
16 TANKS - TOTALS			3042							570	2464				
GRAND TOTAL			31375							9783	21481				

Notes: (1) The total waste volume includes a volume of retained gas that was calculated from tank measurements. Seven tanks are affected: A-101, AX-101, S-102, S-111, SX-105, U-103, and U-109.

(2) +/- 1 Kgal difference in volumes is due to rounding

TABLE B-1. INVENTORY AND STATUS BY TANK – SINGLE-SHELL TANKS

December 31, 2002

Footnotes:

Stabilization information is from WHC-SD-RE-TI-178, "SST Stabilization Record," latest revision, or from the SST Stabilization Project, or the System Engineer.

Initial estimated Pumpable Liquid volumes (below) are based on HNF-2978, Rev. 4, "Updated Pumpable Liquid Volume Estimates and Jet Pump Operations for Interim Stabilization of Remaining Single-Shell Tanks," dated June 30, 2002.

Best Basis Inventory (BBI) quarterly update review resulted in changes to the following tanks effective December 31, 2002: A-101, AX-101, BY-106, C-103, S-101, S-102, S-111, SX-105, TX-116, U-102, U-107, and U-111 (S-107 and U-108 were evaluated but no changes resulted).

HNF-2978, Rev. 4, resulted in changes to the following tanks, effective June 30, 2002: A-101, AX-101, BY-105, BY-106, C-103, S-101, S-102, S-107, S-111, S-112, SX-101, SX-102, SX-103, U-107, U-108, and U-111.

Tank Status for C-104, C-201, C-202, C-203, C-204, S-102, S-103, S-105, and S-106 was changed from Intrusion Prevention to "Retrieval" effective October 2002.

Letter to DOE-ORP, CHG-0203601 R1, dated October 15, 2002, requests that tanks S-102, S-112, and U-107 be removed from the Consent Decree stabilization requirements, and that the tanks be considered for accelerated retrieval of the waste. CH2M HILL recommends that waste retrieval and pumping commence prior to achieving the interim stabilization endpoint, as currently defined in the Interim Stabilization Consent Decree. This initiative will achieve the objective of early removal of waste from aging Single-Shell Tanks and will require an amendment to the Interim Stabilization Consent Decree.

(a) A-101 Initial estimated Pumpable Liquid volume: 610 Kgal (HNF-2978, Rev. 4, effective June 30, 2002)

Pumping began on May 6, 2000. No pumping occurred from July 12, 2000, until January 17, 2002, when pumping resumed. Pumping was shut down March 27, 2002, due to high transfer line pressure; pumping resumed April 20, 2002.

Volumes reported in May 2002 and subsequent months reflect an error associated with the readings from the flowmeter (approximately a 1% deviation - the flowmeter is reading high). The final amount of waste transferred at the end of saltwell pumping will be adjusted to correct for this error; until then the volumes reported will be the actual volumes on the procedure data sheets.

The BBI quarterly update for December 31, 2002, indicates that this tank included interstitial liquid and gas, and it is assumed that the gas was dissipated during pumping; volumes have been adjusted to reflect this change.

Final volumes will be determined at completion of Interim Stabilization.

(b) AX-101 Initial estimated Pumpable Liquid volume: 365 Kgal (HNF-2978, Rev. 4, effective June 30, 2002)

Pumping began July 29, 2000, shut down on August 11, 2000, and resumed March 22, 2001. Pumping was shut down April 3, 2001, due to failure of the transfer line. Pumping resumed February 1, 2002, and was shut down again March 28, 2002, due to alarm #40 Power Monitor. Pumping was resumed April 9, 2002.

Volumes reported in May 2002 and subsequent months reflect an error associated with the readings from the flowmeter (approximately a 1% deviation - the flowmeter was reading high). The final amount of waste transferred at the end of saltwell pumping will be adjusted to correct for this error; until then the volumes reported will be the actual volumes on the procedure data sheets.

The BBI quarterly update for December 31, 2002, indicates that this tank included interstitial liquid and gas, and it is assumed that the gas was dissipated during pumping; volumes have been adjusted to reflect this change.

Final volumes will be determined at completion of Interim Stabilization.

(c) BY-105 Initial estimated Pumpable Liquid volume: 94 Kgal (HNF-2978, Rev. 4, effective June 30, 2002)

Pumping began July 11, 2001. Pumping was shut down August 11, 2001, due to transfer line leak detectors not meeting all operability requirements of the TSR. Compensatory actions were established to allow resumption of pumping. Additionally, field work for Project W-314, "Tank Farm Upgrades," took the primary transfer route out of service. No pumping occurred from August to November 2001 when pumping resumed. No pumping occurred between December 2001 and August 2002; DCRT waste had to be transferred to tank AP-102 before pumping could resume. Pumping was restarted and shut down several times during August 2002. Pumping was shut down on August 30, 2002, because the DCRT was full: awaiting BX-244 transfer to AP-102. Pumping was restarted on September 1, 2002, and shut down on September 13, 200. Troubleshooting indicates two possible problems: (1) a plugged backflow preventer downstream of the injection pump or (2) the thrust bearings in the transfer pump are worn out.

This tank was placed under evaluation for meeting Interim Stabilization criteria on September 13, 2002.

Final volumes will be determined at completion of Interim Stabilization

(d) BY-106 Initial estimated Pumpable Liquid volume: 103 Kgal (HNF-2978, Rev. 4, effective June 30, 2002)

Pumping was originally started August 10, 1995, and shut down October 17, 1995, due to an Unreviewed Safety Question (USQ) for flammable gas concerns.

Pumping was restarted July 11, 2001. Pumping was shut down August 11, 2001, due to transfer line leak detectors not meeting all operability requirements of the TSR. Compensatory actions were established to allow resumption of pumping. Additionally, field work for Project W-314, "Tank Farm Upgrades," took the primary transfer route out of service. Pumping resumed November 13, 2001. No pumping occurred between December 2001 and August 2002; DCRT waste had to be transferred to tank AP-102 before pumping could resume. Pumping was restarted, shut down, and restarted several times during August 2002. Pumping was shut down on August 30, 2002, because the DCRT was full: awaiting BX-244 transfer to AP-102. Pumping was shut down and restarted several times in early October 2002, and was shut down on October 9, 2002, to support maintenance work. Pumping was restarted November 16, 2002.

Final volumes will be determined at completion of Interim Stabilization

(e) C-103 Initial estimated Pumpable Liquid volume: 80 Kgal (HNF-2978, Rev. 4, effective June 30, 2002)

Pumping was started on November 29, 2002, five months ahead of schedule. This is the last tank scheduled to begin pumping under the Interim Stabilization Consent Decree.

(f) S-101 Initial estimated Pumpable Liquid volume: 77 Kgal (HNF-2978, Rev. 4, effective June 30, 2002)

Pumping began July 27, 2002. Pumping was shut down and restarted several times in August 2002; pumping was shut down on August 7, 2002. Pumping was shut down and restarted several times in October 2002; shut down on October 23, 2002, due to an alarm for the Programmable Logic Controller Communication (PLCC) link failing. Pumping remains shut down until troubleshooting is completed.

Final volumes will be determined at completion of Interim Stabilization.

(g) S-102 Initial estimated Pumpable Liquid volume: 156 Kgal (HNF-2978, Rev. 4, effective June 30, 2002)

Pumping began March 18, 1999. Many pumping problems occurred over the following months, and the pump was replaced several times. Pumping was interrupted again in June 2000. No pumping occurred until May 10, 2002, when pumping resumed. The pump was manually shut down May 18, 2002. A Lock and Tag was hung to support Saltwell Tie-in work scheduled. Pumping resumed June 30, 2002. Pumping was shut down on October 15, 2002, because the analog/mechanical water meter is not advancing, and there is no way to track dilution additions until the water meter is repaired. A letter was sent to DOE-ORP on October 15, 2002 - see top of page B-8 for further information.
Final volumes will be determined at completion of Interim Stabilization

(h) S-107 Initial estimated Pumpable Liquid volume: 61 Kgal (HNF-2978, Rev. 4, effective June 30, 2002)

Pumping began on September 4, 2002. Pumping was shut down and restarted several times in October 2002; pumping shut down on October 17, 2002, due to a high bearing temperature. Failed recirculation line check valves are suspected. **Pumping was restarted on December 28, 2002; and was shut down (and restarted) several times from December 28 through December 31, 2002, due to alarms from various sources.**

(i) S-111 Initial estimated Pumpable Liquid volume: 147 Kgal (HNF-2978, Rev. 4, effective June 30, 2002)

Pumping began December 18, 2001. (Additionally, 3 Kgal were pumped in October 1975) Pumping was shut down on October 1, 2002 to support an S-complex outage. No pumping occurred in October 2002. Pumping was restarted on November 27, 2002.

Final volumes will be determined at completion of Interim Stabilization.

(j) S-112 Initial estimated Pumpable Liquid volume: 67 Kgal (HNF-2978, Rev. 4, effective June 30, 2002)

Pumping resumed on September 21, 2002. (Initial saltwell pumping took place in August 1978, with a total of 125 Kgal being pumped at that time.) A letter was sent to DOE-ORP on October 15, 2002 - see top of page B-8 for further information.

(k) SX-101 Initial estimated Pumpable Liquid volume: 80 Kgal (HNF-2978, Rev. 4, effective June 30, 2002)

Pumping began November 22, 2000. No pumping has occurred since December 2000 due to failure of the pump. Pumping resumed September 21, 2001, following replacement of the saltwell pump and the lower piping. No pumping has occurred since November 2001. Attempts were made to restart pumping in July 2002; pumping remains down because jet/foot valve assembly is plugged.

Final volumes will be determined at completion of Interim Stabilization.

(l) SX-102 Initial estimated Pumpable Liquid volume: 106 Kgal (HNF-2978, Rev. 4, effective June 30, 2002)

Pumping began December 15, 2001. Pumping was shut down on August 14, 2002, in support of S-107 field work. Pumping was manually shut down on October 23, 2002, due to an alarm for the PLCC failure alarm in S-101 not shutting the pump down. **The pump is currently shutdown due to a transfer line restriction.**

Final volumes will be determined at completion of Interim Stabilization.

(m) SX-103 Initial estimated Pumpable Liquid volume: 175 Kgal (HNF-2978, Rev. 4, effective June 30, 2002)

Pumping began October 26, 2000. Pumping was shut down April 22, 2001, due to leak detector and subsequent shielding problems in the pump pit. Pumping resumed September 14, 2001. Pumping was shut down on August 14, 2002, in support of S-107 field work. Pumping was restarted September 1, 2002, and was shut down on September 17, 2002.

This tank was placed under evaluation for meeting Interim Stabilization criteria on September 17, 2002.

Final volumes will be determined at completion of Interim Stabilization

(n) U-107 Initial estimated Pumpable Liquid volume: 115 Kgal (HNF-2978, Rev. 4, effective June 30, 2002)

Pumping began September 29, 2001. Pumping was shut down on September 11, 2002. The pump had failed, and was replaced on October 21, 2002. A letter was sent to DOE-ORP on October 15, 2002 - see top of page B-8 for further information.

Final volumes will be determined at completion of Interim Stabilization

Saltcake dissolution began on December 3, 2002; any additional pumping is associated with retrieval and will not be included in interim stabilization pumping volumes. A total of 4.7 Kgallons of dissolution water, and a total of 1.9 Kgallons of system and dilution water was added in December 2002; pumping resulted in a net removal of 1.5 Kgallons of waste.

(o) U-108 Initial estimated Pumpable Liquid volume: 120 Kgal (HNF-2978, Rev. 4, effective June 30, 2002)

Pumping began December 2, 2001. No pumping occurred in April 2002; pumping remains down due to a partially plugged transfer line. Pumping was restarted briefly on May 18, 2002. The pump shut down several times due to alarming and was restarted in bypass mode. From May 18 to May 31, 2002, various Trouble Alarms were intermittently activated. During June 2002, this pump was restarted and shut down several times. As of June 30, 2002, it was still shut down due to transfer line restrictions. Pumping resumed in July 2002. Pumping was shut down on September 30, 2002, for planned SY exhauster outage. Pumping was restarted and shut down several times in October 2002. Pumping was restarted November 3, 2002.

Final volumes will be determined at completion of Interim Stabilization.

(p) U-111 Initial estimated Pumpable Liquid volume: 77 Kgal (HNF-2978, Rev. 4, effective June 30, 2002)

Pumping began on June 14, 2002. Pumping was shut down and restarted several times in October 2002.

Final volumes will be determined at completion of Interim Stabilization.

TABLE B-2. SINGLE-SHELL TANKS STABILIZATION STATUS SUMMARY

December 31, 2002

Partial Interim Isolated (PI)

EAST AREA

A-101
A-102

AX-101

BY-102
BY-103
BY-105
BY-106
BY-109

C-103
C-105
C-106

East Area 11

WEST AREA

S-101
S-107
S-108
S-109
S-110
S-111
S-112

SX-101
SX-102
SX-103
SX-104
SX-105
SX-106

T-101
T-104
T-107
T-110
T-111

U-102
U-103
U-105
U-106
U-107
U-108
U-109
U-110
U-111

West Area 26

Total 37

Intrusion Prevention Completed (IP)

EAST AREA	WEST AREA
A-103	S-104
A-104	
A-105	SX-107
A-106	SX-108
	SX-109
AX-102	SX-110
AX-103	SX-111
AX-104	SX-112
	SX-113
B-FARM - 16 tanks	SX-114
BX-FARM - 12 tanks	SX-115
BY-101	T-102
BY-104	T-103
BY-107	T-105
BY-108	T-106
BY-110	T-108
BY-111	T-109
BY-112	T-112
	T-201
C-101	T-202
C-102	T-203
C-107	T-204
C-108	
C-109	TX-FARM - 18 tanks
C-110	
C-111	TY-FARM - 6 tanks
C-112	
	U-101
	U-104
	U-112
	U-201
	U-202
	U-203
	U-204
East Area 50	West Area 52
	Total 102

Retrieval ®

East Area	West Area
C-104	S-102
C-201	S-103
C-202	S-105
C-203	S-106
C-204	
East Area 5	West Area 4
	Total 9

Interim Stabilized (IS)

EAST AREA	WEST AREA
A-102	S-103
A-103	S-104
A-104	S-105
A-105	S-106
A-106	S-108
	S-109
AX-102	S-110
AX-103	
AX-104	SX-104
	SX-105
B-FARM - 16 tanks	SX-106
BX-FARM - 12 tanks	SX-107
	SX-108
BY-101	SX-109
BY-102	SX-110
BY-103	SX-111
BY-104	SX-112
BY-107	SX-113
BY-108	SX-114
BY-109	SX-115
BY-110	
BY-111	T-Farm - 16 tanks
BY-112	TX-Farm - 18 tanks
	TY-Farm - 6 tanks
C-101	
C-102	U-101
C-102	U-102
C-105	U-103
C-107	U-104
C-108	U-105
C-109	U-106
C-110	U-109
C-111	U-110
C-112	U-112
C-201	U-201
C-202	U-202
C-203	U-203
C-204	U-204
East Area 60	West Area 72
	Total 132

Controlled, Clean, and Stable (CCS)

East Area	West Area
BX-Farm - 12 Tanks	TX-Farm - 18 Tanks
	TY Farm - 6 Tanks
East Area 12	West Area 24
	Total 36

CCS activities have been deferred until funding is available.

TABLE B-3. SINGLE-SHELL TANKS INTERIM STABILIZATION STATUS

December 31, 2002

Tank Number	Tank Integrity	Interim Stabil. Date (1)	Stabil. Method	Tank Number	Tank Integrity	Interim Stabil. Date (1)	Stabil. Method	Tank Number	Tank Integrity	Interim Stabil. Date (1)	Stabil. Method
A-101	SOUND	N/A		C-101	ASMD LKR	11/83	AR	T-108	ASMD LKR	11/78	AR
A-102	SOUND	08/89	SN	C-102	SOUND	09/95	JET(2)	T-109	ASMD LKR	12/84	AR
A-103	ASMD LKR	06/88	AR	C-103	SOUND	N/A		T-110	SOUND	01/00	JET(5)
A-104	ASMD LKR	09/78	AR(3)	C-104	SOUND	09/89	SN	T-111	ASMD LKR	02/95	JET
A-105	ASMD LKR	07/79	AR	C-105	SOUND	10/95	AR	T-112	SOUND	03/81	AR(2)(3)
A-106	SOUND	08/82	AR	C-106	SOUND	N/A		T-201	SOUND	04/81	AR (3)
AX-101	SOUND	N/A		C-107	SOUND	09/95	JET	T-202	SOUND	08/81	AR
AX-102	ASMD LKR	09/88	SN	C-108	SOUND	03/84	AR	T-203	SOUND	04/81	AR
AX-103	SOUND	08/87	AR	C-109	SOUND	11/83	AR	T-204	SOUND	08/81	AR
AX-104	ASMD LKR	08/81	AR	C-110	ASMD LKR	05/95	JET	TX-101	SOUND	02/84	AR
B-101	ASMD IKR	03/81	SN	C-111	ASMD LKR	03/84	SN	TX-102	SOUND	04/83	JET
B-102	SOUND	08/85	SN	C-112	SOUND	09/90	AR	TX-103	SOUND	08/83	JET
B-103	ASMD IKR	02/85	SN	C-201	ASMD LKR	03/82	AR	TX-104	SOUND	09/79	SN
B-104	SOUND	06/85	SN	C-202	ASMD LKR	08/81	AR	TX-105	ASMD LKR	04/83	JET
B-105	ASMD IKR	12/84	AR	C-203	ASMD LKR	03/82	AR	TX-106	SOUND	06/83	JET
B-106	SOUND	03/85	SN	C-204	ASMD LKR	09/82	AR	TX-107	ASMD LKR	10/79	AR
B-107	ASMD LKR	03/85	SN	S-101	SOUND	N/A		TX-108	SOUND	03/83	JET
B-108	SOUND	05/85	SN	S-102	SOUND	N/A		TX-109	SOUND	04/83	JET
B-109	SOUND	04/85	SN	S-103	SOUND	04/00	JET (6)	TX-110	ASMD LKR	04/83	JET
B-110	ASMD LKR	12/84	AR	S-104	ASMD LKR	12/84	AR	TX-111	SOUND	04/83	JET
B-111	ASMD LKR	06/85	SN	S-105	SOUND	09/88	JET	TX-112	SOUND	04/83	JET
B-112	ASMD LKR	05/85	SN	S-106	SOUND	02/01	JET (10)	TX-113	ASMD LKR	04/83	JET
B-201	ASMD LKR	08/81	AR (3)	S-107	SOUND	N/A		TX-114	ASMD LKR	04/83	JET
B-202	SOUND	05/85	AR(2)	S-108	SOUND	12/96	JET	TX-115	ASMD LKR	09/83	JET
B-203	ASMD LKR	06/84	AR	S-109	SOUND	06/01	JET (13)	TX-116	ASMD LKR	04/83	JET
B-204	ASMD LKR	06/84	AR	S-110	SOUND	01/97	JET	TX-117	ASMD LKR	03/83	JET
BX-101	ASMD LKR	09/78	AR(3)	S-111	SOUND	N/A		TX-118	SOUND	04/83	JET
BX-102	ASMD LKR	11/78	AR	S-112	SOUND	N/A		TY-101	ASMD LKR	04/83	JET
BX-103	SOUND	11/83	AR(2)(3)	SX-101	SOUND	N/A		TY-102	SOUND	09/79	AR
BX-104	SOUND	09/89	SN	SX-102	SOUND	N/A		TY-103	ASMD LKR	02/83	JET
BX-105	SOUND	03/81	SN	SX-103	SOUND	N/A		TY-104	ASMD LKR	11/83	AR
BX-106	SOUND	07/95	SN	SX-104	ASMD LKR	04/00	JET (7)	TY-105	ASMD LKR	02/83	JET
BX-107	SOUND	09/90	JET	SX-105	SOUND	08/02	JET (16)	TY-106	ASMD LKR	11/78	AR
BX-108	ASMD LKR	07/79	SN	SX-106	SOUND	05/00	JET (8)	U-101	ASMD LKR	09/79	AR
BX-109	SOUND	08/90	JET	SX-107	ASMD LKR	10/79	AR	U-102	SOUND	06/02	JET (15)
BX-110	ASMD LKR	08/85	SN	SX-108	ASMD LKR	08/79	AR	U-103	SOUND	09/00	JET (9)
BX-111	ASMD LKR	03/95	JET	SX-109	ASMD LKR	05/81	AR	U-104	ASMD LKR	10/78	AR
BX-112	SOUND	09/90	JET	SX-110	ASMD LKR	08/79	AR	U-105	SOUND	03/01	JET (11)
BY-101	SOUND	05/84	JET	SX-111	ASMD LKR	07/79	SN	U-106	SOUND	03/01	JET (12)
BY-102	SOUND	04/95	JET	SX-112	ASMD LKR	07/79	AR	U-107	SOUND	N/A	
BY-103	ASMD LKR	11/97	JET(2)	SX-113	ASMD LKR	11/78	AR	U-108	SOUND	N/A	
BY-104	SOUND	01/85	JET	SX-114	ASMD LKR	07/79	AR	U-109	SOUND	04/02	JET (14)
BY-105	ASMD LKR	N/A		SX-115	ASMD LKR	09/78	AR(3)	U-110	ASMD LKR	12/84	AR
BY-106	ASMD LKR	N/A		T-101	ASMD LKR	04/93	SN	U-111	SOUND	N/A	
BY-107	ASMD LKR	07/79	JET	T-102	SOUND	03/81	AR(2)(3)	U-112	ASMD LKR	09/79	AR
BY-108	ASMD LKR	02/85	JET	T-103	ASMD LKR	11/83	AR	U-201	SOUND	08/79	AR
BY-109	SOUND	07/97	JET	T-104	SOUND	11/99	JET(4)	U-202	SOUND	08/79	SN
BY-110	SOUND	01/85	JET	T-105	SOUND	06/87	AR	U-203	SOUND	08/79	AR
BY-111	SOUND	01/85	JET	T-106	ASMD LKR	08/81	AR	U-204	SOUND	08/79	SN
BY-112	SOUND	06/84	JET	T-107	ASMD LKR	05/96	JET				

LEGEND:

AR = Administratively interim stabilized
JET = Saltwell jet pumped to remove drainable interstitial liquid
SN = Supernatant pumped (Non-Jet pumped)
N/A = Not yet interim stabilized
ASMD LKR = Assumed Leaker

Interim Stabilized Tanks	132
Not Yet Interim Stabilized	17
Total Single-Shell Tanks	149

TABLE B-3. SINGLE-SHELL TANKS INTERIM STABILIZATION STATUS

Footnotes: (in chronological order)

(1) These dates indicate when the tanks were actually interim stabilized. In some cases, the official interim stabilization documents were issued at a later date.

(2) Although tanks BX-103, T-102, and T-112 met the interim stabilization administrative procedure at the time they were stabilized, they no longer meet the recently updated administrative procedure. The tanks were re-evaluated in 1996 and letter 9654456, J. H. Wicks to J. K. McClusky, DOE-RL, dated September 30, 1996, was issued which recommended that no further pumping be performed on these tanks, based on an economic evaluation.

Document RPP-5556, Rev. 0, "Updated Drainable Interstitial Liquid Volume Estimates for 119 Single-Shell Tanks Declared Stabilized," J. G. Field, February 7, 2000, states that five tanks no longer meet the stabilization criteria (BX-103, T-102, and T-112 exceed the supernatant criteria, and BY-103 and C-102 exceed the Drainable Interstitial Liquid [DIL]criteria).

An intrusion investigation was completed on tank B-202 in 1996 because of a detected increase in surface level. As a result of this investigation, it was determined that this tank no longer meets the recently updated administrative procedure for 200 series tanks.

(3) Earlier versions of HNF-SD-RE-TI-178, "SST Stabilization Record," indicated that original Interim Stabilization data are missing on four tanks: B-201, T-102, T-112, and T-201. HNF-SD-RE-TI-178, Rev. 7, dated February 9, 2001, added three additional tanks to those missing stabilization data: A-104, BX-101, and SX-115.

(4) Tank T-104 was declared Interim Stabilized on November 19, 1999. In-tank video taken October 7, 1999, shows the surface is clearly sludge-type waste with no saltcake present. There is no visible supernatant on the surface. Waste surface appears level across tank with numerous cracks. There is a minimal collapsed area around the saltwell screen, with no visible bottom.

(5) Tank T-110 was declared Interim Stabilized on January 5, 2000, after a major equipment failure. An in-tank video taken October 7, 1999 (pumping was discontinued on August 12, 1999), showed the surface of this tank as smooth, brown-tinted sludge with visible cracks.

(6) Tank S-103 was declared Interim Stabilized on April 18, 2000. The surface is a rough, black and brown-colored waste with yellow patches of saltcake visible throughout. The surface appears to be damp, but not saturated, and shows irregular cracking typically seen with surfaces beginning to dry out. A pool of supernatant (10 feet in diameter, 5 feet deep, 1.0 Kgallons) is visible from video observations.

(7) Tank SX-104 was declared Interim Stabilized on April 26, 2000, after a major equipment failure. The surface is a rough, yellowish gray saltcake waste with an irregular surface of visible cracks and shelves that were created as the surface dried out. The waste surface appears to be dry and shows no standing liquid within the tank.

(8) Tank SX-106 was declared Interim Stabilized on May 5, 2000. The surface is a smooth, white-colored saltcake waste. The surface level slopes slightly from the tank sidewall down to a large depression in the center of the tank. A second depression surrounds both saltwell screens and an abandoned Liquid Observation Well (LOW). The waste surfaces appear dry and show no standing liquid within the tank.

(9) Tank U-103 was declared Interim Stabilized on September 11, 2000. The surface is a brown colored waste with irregular patches of white salt crystal. Approximately 30% of the waste surface is covered by the salt formations. The surface level slopes slightly from the tank sidewall down to the first of two depressions in the center of the tank. The waste surface appears dry and shows signs of drying and cracking due to saltwell pumping. LOW readings indicate an average adjusted ILL of 60.2 inches. There is a small pool of supernatant estimated to be 500 gallons.

(10) Tank S-106 was declared Interim Stabilized on February 1, 2001. The surface is a rough, brown and yellow-colored saltcake waste with an irregular surface of mounds and saltcake crystals that were created as the surface was dried out. The waste surface appears to be dry and shows no standing liquid within the tank. There is no evidence of supernatant from video observations. The waste surface slopes gradually from the tank sidewall to the depression in the center of the tank. The depression surrounds both of the saltwell screens, but does not extend around the temperature probe and ENRAF devices.

(11) Tank U-105 was declared Interim Stabilized on March 29, 2001, after a major equipment failure. The surface is a brown colored waste with irregular patches of white salt crystal. Approximately 15% of the surface is covered by the salt formations. The surface level slopes to the first of two depressions in the center of the tank; the first depression is cone shaped and estimated to be 22 feet in diameter. The second depression, inside the first, is cylindrically shaped and has a diameter of approximately 10 feet. Both depressions are centered on the saltwell screen. The waste surface appears dry and shows signs of cracking due to saltwell pumping. There is no visible liquid in the tank.

(12) Tank U-106 was declared Interim Stabilized on March 9, 2001. The surface is a dark brown/yellow colored waste that is covered with many stalagmite-type crystals growing on the surface. The crystals cover approximately 75% of the waste surface. The waste surface is irregular, appears dry, and shows only minimal signs of cracking due to saltwell pumping. The supernatant pool is estimated to be 13.3 feet in diameter based on the visible portion of the saltwell screen. The pool is centered on the saltwell screen.

(13) Tank S-109 was declared Interim Stabilized on June 11, 2001. The surface is primarily a white colored salt crystal with small patches of dark salt visible due to saltwell/sampling activities. Approximately 95% of the waste surface is covered by the salt formations. The surface level slopes slightly from the tank sidewall down to a depression in the center of the tank. The waste surface appears rough and dry and shows signs of cracking and slumping due to saltwell pumping.

(14) Tank U-109 was declared Interim Stabilized on April 5, 2002. The declaration letter to DOE was issued on June 20, 2002. The surface is primarily a brown colored waste with irregular patches of white salt crystal. Approximately 70% of the waste surface is covered by the salt formations. The surface level slopes slightly from the tank sidewall down to a depression in the center of the tank. The depression is cone shaped and is centered on the saltwell screen. The waste surface appears dry and shows signs of cracking due to saltwell pumping. There is no visible liquid within the tank.

(15) Tank U-102 was declared Interim Stabilized on June 19, 2002. The declaration letter to DOE was issued June 28, 2002. The surface is primarily a gray-brown colored cracked waste with irregular patches of white salt crystal. Approximately 50% of the waste surface is covered by the salt formations. The surface level slopes slightly from the tank sidewall down to a depression in the center of the tank. The depression is cone shaped and is centered on the saltwell screen. The waste surface appears dry and shows signs of cracking due to saltwell pumping. There is approximately a 5-foot wide pool of visible liquid within the saltwell screen depression.

(16) Tank SX-105 was declared Interim Stabilized on August 1, 2002; the declaration letter to DOE was issued August 20, 2002. The surface is a rough, yellowish-gray saltcake waste with an irregular surface of visible cracks and shelves due to saltwell pumping. The waste surface appears to be dry and shows no standing water within the tank. The waste surface slopes gradually from the tank sidewall to the center of the tank. There are no large depressions in or around the center of the tank.

TABLE B-4. SINGLE-SHELL TANK INTERIM STABILIZATION MILESTONES

December 31, 2002

New single-shell tank interim stabilization milestones were negotiated in 1999 and are identified in the "Consent Decree." The Consent Decree was approved on August 16, 1999.

CONSENT DECREE
Attachments A-1 and A-2

The following table is the schedule for pumping liquid waste from the remaining twenty-nine (29) single-shell tanks. This schedule is enforceable pursuant to the terms of the Decree except for the "Projected Pumping Completion Dates," which are estimates only and not enforceable. Also, this schedule does not include tank C-106.

Tank Designation	Project Pumping Start Date	Actual Pumping Start Date	Projected Pumping Completion Date	Interim Stabilization Date
1. T-104	Already initiated	March 24, 1996	May 30, 1999	November 19, 1999
2. T-110	Already initiated	May 12, 1997	May 30, 1999	January 5, 2000
3. SX-104	Already initiated	September 26, 1997	December 30, 2000	April 26, 2000
4. SX-106	Already initiated	October 6, 1998	December 30, 2000	May 5, 2000
5. S-102	Already initiated	March 18, 1999	March 30, 2001	
6. S-106	Already initiated	April 16, 1999	March 30, 2001	February 1, 2001
7. S-103	Already initiated	June 4, 1999	March 30, 2001	April 18, 2000
8. U-103 *	June 15, 2000	September 26, 1999	April 15, 2002	September 11, 2000
9. U-105 *	June 15, 2000	December 10, 1999	April 15, 2002	March 29, 2001
10. U-102 *	June 15, 2000	January 20, 2000	April 15, 2002	June 19, 2002
11. U-109 *	June 15, 2000	March 11, 2000	April 15, 2002	April 5, 2002
12. A-101	October 30, 2000	May 6, 2000	September 30, 2003	
13. AX-101	October 30, 2000	July 29, 2000	September 30, 2003	
14. SX-105	March 15, 2001	August 8, 2000	February 28, 2003	August 1, 2002
15. SX-103	March 15, 2001	October 26, 2000	February 28, 2003	
16. SX-101	March 15, 2001	November 22, 2000	February 28, 2003	
17. U-106 *	March 15, 2001	August 24, 2000	February 28, 2003	March 9, 2001
18. BY-106	July 15, 2001	July 11, 2001	June 30, 2003	
19. BY-105	July 15, 2001	July 11, 2001	June 30, 2003	
20. U-108	December 30, 2001	December 2, 2001	August 30, 2003	
21. U-107	December 30, 2001	September 29, 2001	August 30, 2003	
22. S-111	December 30, 2001	December 18, 2001	August 30, 2003	
23. SX-102	December 30, 2001	December 15, 2001	August 30, 2003	
24. U-111	November 30, 2002	June 14, 2002	September 30, 2003	
25. S-109	November 30, 2002	September 23, 2000	September 30, 2003	June 11, 2001
26. S-112	November 30, 2002	September 21, 2002	September 30, 2003	
27. S-101	November 30, 2002	July 27, 2002	September 30, 2003	
28. S-107	November 30, 2002	September 4, 2002	September 30, 2003	
29. C-103	Pumping operations began in this tank on November 29, 2002, approximately five months ahead of the scheduled start date of April 2003. It is the final tank to begin pumping operations specified in this Decree.			

* Tanks containing organic complexants.

Completion of Interim Stabilization. DOE will complete interim stabilization of all 29 single-shell tanks listed above by September 30, 2004.

Percentage of Pumpable Liquid Remaining to be Removed:

93% of Total Liquid	9/30/1999 (1)
38% of Organic Complexed Pumpable Liquids	9/30/2000 (2)
5% of Organic Complexed Pumpable Liquids	9/30/2001 (3)
18% of Total Liquid	9/30/2002 (4)
2% of Total Liquid	9/30/2003

The "percentage of pumpable liquid remaining to be removed" is calculated by dividing the volume of pumpable liquid remaining to be removed from tanks not yet interim stabilized by the sum of the total amount of liquid that has been pumped and the pumpable liquid that remains to be pumped from all tanks.

(1) The Pumpable Liquid Remaining was reduced to 88% by September 30, 1999. Reference LMHC-9957926 R1, D. I. Allen, LHMC, to D. C. Bryson, DOE-ORP, dated October 26, 1999.

(2) The Complexed Pumpable Liquid Remaining was reduced to 38% by September 15, 2000. Reference CHG-0004752, R. F. Wood, CHG, to J. J. Short, DOE-ORP, dated September 13, 2000.

(3) Reference CHG-0104859, R. F. Wood, CHG, to J. S. O'Connor, DOE-ORP, dated September 20, 2001: this reference states that tanks U-102 and U-109 appear to have met the interim stabilization criteria, thereby reducing the Complexed Pumpable Liquid Remaining to zero. Reference CHG-0202630, dated June 20, 2002, declared tank U-109 Interim Stabilized and confirmed the completion of Consent Decree milestone, Attachment A, Item 11, as well as the partial completion of milestone D-001-004-T01. Reference CHG-0202901, dated June 28, declared tank U-102 Interim Stabilized and confirmed the completion of Consent Decree milestone, Attachment A, Item 10, as well as the partial completion of milestone D-001-004-T01.

(4) Reference CHG-0204571, J. C. Fulton, CHG, to J. E. Rasmussen, DOE-ORP, dated September 26, 2002: this reference states that Consent Decree Milestone D-001-12V "The Percentage of Pumpable Liquid Remaining to be Removed Will be Equal To or Less Than 18% of Total Liquid," will be completed by September 30, 2002. Reference CHG-204636, R. F. Wood, CHG, to J. S. O'Connor, DOE-ORP, dated September 30, 2002: this reference states that the milestone was met on September 28, 2002. The percentage of pumpable liquid remaining was 17.94% or less than 550 Kgallons.

TABLE B-5. SINGLE-SHELL TANK LEAK VOLUME ESTIMATES (Sheet 1 of 6)

December 31, 2002

Tank Number		Date Declared Confirmed or Assumed Leaker (3)	Volume Gallons (2)	Associated KiloCuries 137 Cs (9)	Interim Stabilized Date (11)	Leak Estimate Updated	Leak Estimate Reference
241-A-103		1987	5500 (8)		06/88	1987	(j)
241-A-104		1975	500 to 2500	0.8 to 1.8 (q)	09/78	1983	(a)(q)
241-A-105	(1)	1963	10000 to 277000	85 to 760 (b)	07/79	1991	(b)(c)
241-AX-102		1988	3000 (8)		09/88	1989	(h)
241-AX-104		1977	-- (6)		08/81	1989	(g)
241-B-101		1974	-- (6)		03/81	1989	(g)
241-B-103		1978	-- (6)		02/85	1989	(g)
241-B-105		1978	-- (6)		12/84	1989	(g)
241-B-107		1980	8000 (8)		03/85	1986	(d)(f)
241-B-110		1981	10000 (8)		03/85	1986	(d)
241-B-111		1978	-- (6)		06/85	1989	(g)
241-B-112		1978	2000		05/85	1989	(g)
241-B-201		1980	1200 (8)		08/81	1984	(e)(f)
241-B-203		1983	300 (8)		06/84	1986	(d)
241-B-204		1984	400 (8)		06/84	1989	(g)
241-BX-101		1972	-- (6)		09/78	1989	(g)
241-BX-102		1971	70000	50 (l)	11/78	1986	(d)
241-BX-108		1974	2500	0.5 (l)	07/79	1986	(d)
241-BX-110		1976	-- (6)		08/85	1989	(g)
241-BX-111		1984 (13)	-- (6)		03/95	1993	(g)
241-BY-103		1973	<5000		11/97	1983	(a)
241-BY-105		1984	-- (6)		N/A	1989	(g)
241-BY-106		1984	-- (6)		N/A	1989	(g)
241-BY-107		1984	15100 (8)		07/79	1989	(g)
241-BY-108		1972	<5000		02/85	1983	(a)
241-C-101		1980	20000 (8)(10)		11/83	1986	(d)
241-C-110		1984	2000		05/95	1989	(g)
241-C-111		1968	5500 (8)		03/84	1989	(g)
241-C-201	(4)	1988	550		03/82	1987	(i)
241-C-202	(4)	1988	450		08/81	1987	(i)
241-C-203		1984	400 (8)		03/82	1986	(d)
241-C-204	(4)	1988	350		09/82	1987	(i)
241-S-104		1968	24000 (8)		12/84	1989	(g)
241-SX-104		1988	6000 (8)		04/00	1988	(k)
241-SX-107		1964	<5000		10/79	1983	(a)
241-SX-108	(5)(14)	1962	2400 to 35000	17 to 140 (m)(q)(t)	08/79	1991	(m)(q)(t)
241-SX-109	(5)(14)	1965	<10000	<40 (n)(t)	05/81	1992	(n)(t)
241-SX-110		1976	5500 (8)		08/79	1989	(g)
241-SX-111	(14)	1974	500 to 2000	0.6 to 2.4 (l)(q)(t)	07/79	1986	(d)(q)(t)
241-SX-112	(14)	1969	30000	40 (l)(t)	07/79	1986	(d)(t)
241-SX-113		1962	15000	8 (l)	11/78	1986	(d)
241-SX-114		1972	-- (6)		07/79	1989	(g)
241-SX-115		1965	50000	21 (o)	09/78	1992	(o)
241-T-101		1992	7500 (8)		04/93	1992	(p)
241-T-103		1974	<1000 (8)		11/83	1989	(g)
241-T-106		1973	115000 (8)	40 (l)	08/81	1986	(d)
241-T-107		1984	-- (6)		05/96	1989	(g)
241-T-108		1974	<1000 (8)		11/78	1980	(f)
241-T-109		1974	<1000 (8)		12/84	1989	(g)
241-T-111		1979, 1994 (12)	<1000 (8)		02/95	1994	(f)(r)
241-TX-105		1977	-- (6)		04/83	1989	(g)
241-TX-107	(5)	1984	2500		10/79	1986	(d)
241-TX-110		1977	-- (6)		04/83	1989	(g)
241-TX-113		1974	-- (6)		04/83	1989	(g)
241-TX-114		1974	-- (6)		04/83	1989	(g)
241-TX-115		1977	-- (6)		09/83	1989	(g)
241-TX-116		1977	-- (6)		04/83	1989	(g)
241-TX-117		1977	-- (6)		03/83	1989	(g)
241-TY-101		1973	<1000 (8)		04/83	1980	(f)
241-TY-103		1973	3000	0.7 (l)	02/83	1986	(d)
241-TY-104		1981	1400 (8)		11/83	1986	(d)
241-TY-105		1960	35000	4 (l)	02/83	1986	(d)
241-TY-106		1959	20000	2 (l)	11/78	1986	(d)
241-U-101		1959	30000	20 (l)	09/79	1986	(d)
241-U-104		1961	55000	0.09 (l)	10/78	1986	(d)
241-U-110		1975	5000 to 8100 (8)	0.05 (q)	12/84	1986	(d)(q)
241-U-112		1980	8500 (8)		09/79	1986	(d)
67 Tanks			<750,000 - 1,050,000 (7)				

N/A = not applicable (not yet interim stabilized)

TABLE B-5. SINGLE-SHELL TANKS LEAK VOLUME ESTIMATES

Footnotes:

(1) Current estimates [see Reference (b)] are that 610 Kgallons of cooling water was added to tank A-105 from November 1970 to December 1978 to aid in evaporative cooling. In accordance with Dangerous Waste Regulations [Washington Administrative Code 173-303-070 (2)(a)(ii), as amended, Washington State Department of Ecology, 1990, Olympia, Washington], any of this cooling water that has been added and subsequently leaked from the tank must be classified as a waste and should be included in the total leak volume. In August 1991, the leak volume estimate for this tank was updated in accordance with the WAC regulations. Previous estimates excluded the cooling water leaks from the total leak volume estimates because the waste content (concentration) in the cooling water which leaked should be much less than the original liquid waste in the tank (the sludge is relatively insoluble). The total leak volume estimate in this report (10 to 277 Kgallons) is based on the following (see References):

1. Reference (b) contains an estimate of 5 to 15 Kgallons for the initial leak prior to August 1968.

2. Reference (b) contains an estimate of 5 to 30 Kgallons for the leak while the tank was being sluiced from August 1968 to November 1970.

3. Reference (b) contains an estimate of 610 Kgallons of cooling water added to the tank from November 1970 to December 1978, but it was estimated that the leakage was small during this period. This reference contains the statement "Sufficient heat was generated in the tank to evaporate most, and perhaps nearly all, of this water." This results in a low estimate of zero gallons leakage from November 1970 to December 1978.

4. Reference (c) contains an estimate the 378 to 410 Kgallons evaporated out of the tank from November 1970 to December 1978. Subtracting the minimum evaporation estimate from the cooling water added estimate provides a range from 0 to 232 Kgallons of cooling water leakage from November 1970 to December 1978.

	Low Estimate	High Estimate
Prior to August 1968	5,000	15,000
August 1968 to November 1970	5,000	30,000
November 1970 to December 1978	0	232,000
Totals	10,000	277,000

(2) These leak volume estimates do not include (with some exceptions), such things as: (a) cooling/raw water leaks, (b) intrusions (rain infiltration) and subsequent leaks, (c) leaks inside the tank farm but not through the tank liner (surface leaks, pipeline leaks, leaks at the joint for the overflow or fill lines, etc.), and (d) leaks from catch tanks, diversion boxes, encasements, etc.

(3) In many cases, a leak was suspected long before it was identified or confirmed. For example, Reference (d) shows that tank U-104 was suspected of leaking in 1956. The leak was confirmed in 1961. This report lists the "assumed leaker" date of 1961. Using present standards, tank U-104 would have been declared an assumed leaker in 1956. In 1984, the criteria designations of "suspected leaker," "questionable integrity," "confirmed leaker," "declared leaker," and "borderline and dormant" were merged into one category now reported as "assumed leaker." See Reference (f) for explanation of when, how long, and how fast some of the tanks leaked. It is highly likely that there have been undetected leaks from single-shell tanks because of the nature of their design and instrumentation.

(4) The leak volume estimate date for these tanks is before the declared leaker date because the tank was in a suspected leaker or questionable integrity status; however, a leak volume had been estimated prior to the tank being reclassified.

(5) The increasing radiation levels in drywells and laterals associated with these three tanks could be indicating continuing leak or movement of existing radionuclides in the soil. There is no conclusive way to confirm these observations. (Repeat spectral drywell scans are not part of the current Tank Farm leak detection program but can be run on request a special needs arise. A select subset of drywells is routinely monitored by the Vadose Zone Characterization Project to assess movement of gamma-emitting radionuclides in the subsurface. There are currently no functioning laterals and no plan to prepare them for use).

(6) Methods were used to estimate the leak volumes from these 19 tanks based on the assumption that their cumulative leakage is approximately the same as for 18 of the 24 tanks identified in footnote (9). For more details see Reference (g). The total leak volume estimate for these tanks is 150 Kgallons (rounded to the nearest Kgallon), for an average of approximately 8 Kgallons for each of 19 tanks.

(7) The total has been rounded to the nearest 50 Kgallons. Upper bound values were used in many cases in developing these estimates. It is likely that some of these tanks have not actually leaked.

(8) Leak volume estimate is based solely on observed liquid level decreases in these tanks. This is considered to be the most accurate method for estimating leak volumes.

(9) The curie content shown is as listed in the reference document and is not decayed to a consistent date: therefore, a cumulative total is inappropriate.

(10) Tank C-101 experienced a liquid level decrease in the late 1960s and was taken out of service and pumped to a minimum heel in December 1969. In 1970, the tank was classified as a "questionable integrity" tank. Liquid level data show decreases in level throughout the 1970s and the tank was saltwell pumped during the 1970s, ending in April 1979. The tank was reclassified as a "confirmed leaker" in January 1980. See References (q) and (r); refer to Reference (s) for information on the potential for there to have been leaks from other C-farm tanks (specifically, C-102, C-103, and C-109).

(11) These dates indicate when the tanks were declared to be interim stabilized. In some cases, the official interim stabilization documents were issued at a later date. Also, in some cases, the field work associated with interim stabilization was completed at an earlier date.

(12) Tank T-111 was declared an "assumed re-leaker" on February 28, 1994, due to a decreasing trend in surface level measurement. This tank was pumped, and interim stabilization completed on February 22, 1995.

(13) Tank BX-111 was declared an "assumed re-leaker" in April 1993. Preparations for pumping were delayed, following an administrative hold placed on all tank farm operations in August 1993. Pumping resumed and the tank was declared interim stabilized on March 15, 1995.

(14) The leak volume and curie release estimates on tanks SX-108, SX-109, SX-111, and SX-112 have been re-evaluated using a Historical Leak Model [see Reference (t)]. In general, the model estimates are much higher than the values listed in the table, both for volume and curies released. The values listed in the table do not reflect this revised estimate because, "In particular, it is worth emphasizing that this report was never meant to be a definitive update for the leak baseline at the Hanford Site. It was rather meant to be an attempt to view the issue of leak inventories with a new and different methodology." (This quote is from the first page of the referenced report).

(15) In July 1998, the Washington State Department of Ecology (Ecology) directed the U.S. Department of Energy (DOE) to develop corrective action plans for eight single-shell tank farms (B/BX/BY/S/SX/T/TX/TY) where groundwater contamination likely originated from tank farm operations. A Tri-Party Agreement milestone (M-45 series) was developed that established a formalized approach for evaluating impacts on groundwater quality of loss of tank wastes to the vadose zone underlying these tank farms. Planning documents have been completed for the S, SX, B, BX, and BY tank farms and will be completed for the T, TX, and TY farms. The phase 1 field investigation is near completion in the S and SX

was completed for the TX tank farm, and is underway in the T and TY tank farms. Documentation preparation for field characterization of the remaining four single-shell tank farms is underway.

SST Vadose Zone Project drilling and testing activities near tank BX-102 were completed in March 2001. A borehole (299-E33-45) was drilled through the postulated uranium plume resulting from the 1951 tank BX-102 overfill event to confirm the presence of uranium, define its present depth, and survey other contaminants of interest such as Tc-99. Thirty-five split-spoon samples were collected for laboratory analyses. This borehole was decommissioned after collection and analysis of groundwater samples.

Borehole W33-46, adjacent to tank B-110, was drilled to a depth of approximately 190 feet in July 2001. Soil samples were collected for analysis as part of the tank farm vadose zone characterization activities. During decommissioning, this borehole was completed as a vadose zone monitoring structure. Work was accomplished in cooperation with scientists from Idaho National Engineering and Environmental Laboratory and Pacific Northwest National Laboratory. This borehole is now the first fully instrumented vadose zone hydrographic monitoring structure to be completed in a Hanford site tank farm.

On July 31, 2002, the Washington State Department of Ecology issued a letter-directive in response to RPP-10757 which suggested a path forward in dealing with the high ^{99}Tc activity in groundwater at well 299-W23-19 near tank SX-115. No formal remediation is required, however, extensive purging of the well is to be done concurrent with quarterly sampling. In addition, an array of specific conductivity probes is to be placed in the well to monitor the electrical properties of the water (^{99}Tc activity is directly proportional to nitrate concentration, and nitrate concentration is proportional to electrical conductivity). A data logger with remote reading capability will be installed together with the specific conductivity probes. **Because large volumes of water are to be removed, and because the aquifer is incapable of supporting a high-rate pump, the capability of pumping this well from outside the tank farm fence (to allow non-tank farm trained personnel to operate the pumping system) is to be installed by March 2003.**

References:

(a) Murthy, K. S., et al., June 1983, *Assessment of Single-Shell Tank Residual Liquid Issues at Hanford Site, Washington*, PNL-4688, Pacific Northwest Laboratory, Richland, Washington.

(b) WHC, 1991a, *Tank 241-A-105 Leak Assessment*, WHC-MR-0264, Westinghouse Hanford Company, Richland, Washington.

(c) WHC, 1991b, *Tank 241-A-105 Evaporation Estimate 1970 Through 1978*, WHC-EP-0410, Westinghouse Hanford Company, Richland, Washington.

(d) Smith, D. A., January 1986, *Single-Shell Tank Isolation Safety Analysis Report*, SD-WM-SAR-006, Rev. 1, Rockwell Hanford Operations, Richland, Washington.

(e) McCann, D. C., and T. S. Vail, September 1984, *Waste Status Summary*, RHO-RE-SR-14, Rockwell Hanford Operations, Richland, Washington.

(f) Catlin, R. J., March 1980, *Assessment of the Surveillance Program of the High-Level Waste Storage Tanks at Hanford*, Office of Environmental Compliance and Review, for the U.S. Department of Energy, Washington D.C.

(g) Baumhardt, R. J., May 15, 1989, Letter to R. E. Gerton, U.S. Department of Energy-Richland Operations Office, *Single-Shell Tank Leak Volumes*, 8901832B R1, Westinghouse Hanford Company, Richland, Washington.

(h) WHC, 1990a, Occurrence Report, *Surface Level Measurement Decrease in Single-Shell Tank 241-AX-102*, WHC-UO-89-023-TF-05, Westinghouse Hanford Company, Richland, Washington.

(i) Groth, D. R., July 1, 1987, Internal Memorandum to R. J. Baumhardt, *Liquid Level Losses in Tanks 241-C-201, -202 and -204*, 65950-87-517, Westinghouse Hanford Company, Richland, Washington.

(j) Groth, D. R., and G. C. Owens, May 15, 1987, Internal Memorandum to J. H. Roecker, *Tank 103-A Integrity Evaluation*, Rockwell Hanford Operations, Richland, Washington.

(k) Dunford, G. L., July 8, 1988, Internal Memorandum to R. K. Welty, *Engineering Investigation: Interstitial Liquid Level Decrease in Tank 241-SX-104*, 13331-88-416, Westinghouse Hanford Company, Richland, Washington.

(l) ERDA, 1975, *Final Environmental Statement Waste Management Operations, Hanford Reservation, Richland, Washington*, ERDA-1538, 2 vols., U.S. Energy Research and Development Administration, Washington, D.C.

(m) WHC, 1992a, *Tank 241-SX-108 Leak Assessment*, WHC-MR-0300, Westinghouse Hanford Company, Richland, Washington.

(n) WHC, 1992b, *Tank 241-SX-109 Leak Assessment*, WHC-MR-0301, Westinghouse Hanford Company, Richland, Washington.

(o) WHC, 1992c, *Tank 241-SX-115 Leak Assessment*, WHC-MR-0302, Westinghouse Hanford Company, Richland, Washington.

(p) WHC, 1992d, Occurrence Report, *Apparent Decrease in Liquid Level in Single Shell Underground Storage Tank 241-T-101, Leak Suspected; Investigation Continuing*, RL-WHC-TANKFARM-1992-0073, Westinghouse Hanford Company, Richland, Washington.

(q) WHC,1990b, *A History of the 200 Area Tank Farms*, WHC-MR-0132, Westinghouse Hanford Company, Richland, Washington.

(r) WHC, 1993, *Assessment of Unsaturated Zone Radionuclide Contamination Around Single-Shell Tanks 241-C-105 and 241-C-106, WHC-SD-EN-TI-185*, REV OA, Westinghouse Hanford Company, Richland, Washington.

(s) WHC, 1994, Occurrence Report, *Apparent Liquid Level Decrease in Single Shell Underground Storage Tank 241-T-111; Declared an Assumed Re-Leaker*, RL-WHC-TANKFARM-1994-0009, Westinghouse Hanford Company, Richland, Washington.

(t) HNF, 1998, Agnew, S. F., and R. A. Corbin, August 1998, *Analysis of SX Farm Leak Histories - Historical Leak Model* (HLM), HNF-3233, Rev. 0, Los Alamos National Laboratory, Los Alamos, New Mexico.

TABLE B-6. SINGLE-SHELL TANKS MONITORING FREQUENCY STATUS (149 tanks)

December 31, 2002

Legend:	
E	ENRAF Level Gauge
MT	Manual Tape
FIC	Food Instrument Corporation Level Gauge
L	Liquid Observation Well
D,W,Q,Req.	Daily, Weekly, Quarterly, Request
O/C	Out of Compliance with TSR or OSD
O/S	Out of Service

All data were collected in accordance with Technical Safety Requirement (TSR) and Operating Specification Specification Documents (OSD).

Tank	Surface Level Device (1)	Surface Level Frequency	Liquid Observation Well (LOW)	LOW Frequency	Thermocouple Tree Risers (1)	Temperature Frequency	Dome Elevation Frequency
A-101	E*	Q	L (O/S) (2)	W	12*	6 mo.	2 yr
A-102	E*	Q			7	6 mo.	2 yr
A-103	E*	Q	L	W	15	6 mo.	2 yr
A-104	E*	Q			17	6 mo.	2 yr
A-105	E*	Q			9,15,16,17,19,22	6 mo.	2 yr
A-106	E*	Q	L	W	14	6 mo.	2 yr
AX-101	E*	Q	L	W	9B*	6 mo.	1 yr
AX-102	E*	Q			9C*	6 mo.	1 yr
AX-103	E*	Q	L	W	9B*	6 mo.	1 yr
AX-104	E*	Q			9C	6 mo.	1 yr
B-101	E*	Q			9	6 mo.	2 yr
B-102	E*	D			4	6 mo.	2 yr
B-103	E*	Q			4*	6 mo.	2 yr
B-104	E*	Q	L	W	5	6 mo.	2 yr
B-105	E* (O/S) (4)	Q	L	W	15	6 mo.	2 yr
B-106	E*	D			4	6 mo.	2 yr
B-107	E*	Q			3	6 mo.	2 yr
B-108	E*	Q			5	6 mo.	2 yr
B-109	E*	Q			1	6 mo.	2 yr
B-110	E* (O/S) (4)	Q	L	W	8	6 mo.	2 yr
B-111	E*	Q	L	W	8	6 mo.	2 yr
B-112	E*	D			1	6 mo.	2 yr
B-201	E*	D			1	6 mo.	
B-202	E*	D			1	6 mo.	
B-203	E*	D			1	6 mo.	
B-204	E*	D			1	6 mo.	
BX-101	E*	D			2*	6 mo.	2 yr
BX-102	E*	Q			8*	6 mo.	2 yr
BX-103	E*	D			1*	6 mo.	2 yr
BX-104	E*	D				N/A	2 yr
BX-105	E*	Q			7*	6 mo.	2 yr
BX-106	E*	Q			1*,7*	6 mo.	2 yr
BX-107	E*	D			4*	6 mo.	2 yr
BX-108	E*	Q			5*	6 mo.	2 yr
BX-109	E*	Q			3*,5*	6 mo.	2 yr
BX-110	E*	Q	L	W	1*	6 mo.	2 yr
BX-111	E*	Q	L	W	1* (O/S) (7)	6 mo.	2 yr
BX-112	E*	D			1* (O/S) (7)	6 mo.	2 yr
BY-101	MT	Q	L	W	1*	6 mo.	1 yr
BY-102	E*	Q	L	W		N/A	1 yr
BY-103	E*	Q	L	W	1*,5*	6 mo.	1 yr
BY-104	MT	Q	L	W	1*,10B*	6 mo.	1 yr
BY-105	MT	Q	L	W	1*,10C*	6 mo.	1 yr
BY-106	MT	Q	L	W	1*	6 mo.	1 yr
BY-107	MT	Q	L	W	1*,5*	6 mo.	1 yr
BY-108	MT	Q	L	W	3*,8*	6 mo.	1 yr
BY-109	FIC	Q	L	W		N/A	1 yr
BY-110	E	Q	L	W	1*,10A*	6 mo.	1 yr
BY-111	E	Q	L	W	14*	6 mo.	1 yr
BY-112	MT	Q	L	W	2*	6 mo.	1 yr
C-101	E*	Q			2*	6 mo.	2 yr
C-102	E*	Q			7*	6 mo.	2 yr
C-103	E*	D			1*	6 mo.	2 yr
C-104	E*	Q			7*	6 mo.	2 yr

Tank	Surface Level Device (1)	Surface Level Frequency	Liquid Observation Well (LOW)	LOW Frequency	Thermocouple Tree Risers (1)	Temperature Frequency	Dome Elevation Frequency
C-105	E*	Q			1*	6 mo.	2 yr
C-106	E*	Q			8*	Weekly	2 yr
C-107	E*	D			5*	6 mo.	2 yr
C-108	E*	Q			1*,5*	6 mo.	2 yr
C-109	E*	Q			3*,8*	6 mo.	2 yr
C-110	E*	D			8*	6 mo.	2 yr
C-111	MT	Q			5*,6*	6 mo.	2 yr
C-112	E*	Q			1*,8*	6 mo.	2 yr
C-201	MT	Q			6*	6 mo.	
C-202	E	Q			6*	6 mo.	
C-203	MT	Q			6*	6 mo.	
C-204	MT	Q				N/A	
S-101	E*	D	L	W	14*	6 mo.	2 yr
S-102	E*	Q	L	W	3*	6 mo.	2 yr
S-103	E*	D	L	W	4*	6 mo.	2 yr
S-104	E*	Q	L	W	4*	6 mo.	2 yr
S-105	E*	Q	L	W	4*	6 mo.	2 yr
S-106	E*	Q	L	W	2*	6 mo.	2 yr
S-107	E*	D	L	W	4*	6 mo.	2 yr
S-108	E*	Q	L	W	4*	6 mo.	2 yr
S-109	E*	Q	L	W	4*	6 mo.	2 yr
S-110	E*	Q	L	W	4*	6 mo.	2 yr
S-111	E*	D	L	W	4*	6 mo.	2 yr
S-112	E*	Q	L	W	4*	6 mo.	2 yr
SX-101	E*	Q	L	W	15*	6 mo.	1 yr
SX-102	E*	Q	L (O/S) (5)	W	16*	6 mo.	1 yr
SX-103	E*	Q	L	W	2*	Weekly	1 yr
SX-104	E*	Q	L	W	2*	6 mo.	1 yr
SX-105	E*	Q	L	W	2*	6 mo.	1 yr
SX-106	E*	Q	L	W	16*	6 mo.	1 yr
SX-107	E*	Q			10*,14* (O/S) (8)	Weekly	1 yr
SX-108	E*	Q			10*,19* (O/S) (8)	Weekly	1 yr
SX-109	E*	Q			10*,19*	Weekly	1 yr
SX-110	E*	Q			12*,20*	Weekly	1 yr
SX-111	E*	Q			10*,19*	Weekly	1 yr
SX-112	E*	Q			10*,19*	Weekly	1 yr
SX-113	E*	Q			3*	6 mo.	1 yr
SX-114	E*	Q			10*,19*	Weekly	1 yr
SX-115	E	Q				N/A	1 yr
T-101	E*	Q			8*	6 mo.	2 yr
T-102	E*	D				N/A	2 yr
T-103	E*	Q			8*	6 mo.	2 yr
T-104	E*	Q	L	W	4*	6 mo.	2 yr
T-105	E*	Q				N/A	2 yr
T-106	E*	Q			8*	6 mo.	2 yr
T-107	E*	D			4*,5*	6 mo.	2 yr
T-108	E*	D			4*	6 mo.	2 yr
T-109	E*	Q			8*	6 mo.	2 yr
T-110	E*	Q	L	W	8*	6 mo.	2 yr
T-111	E*	Q	L	W	5*	6 mo.	2 yr
T-112	E*	D			8*	6 mo.	2 yr
T-201	E*	D			5*	6 mo.	
T-202	E*	D			5*	6 mo.	
T-203	E*	Q			8*	6 mo.	
T-204	E*	D			8*	6 mo.	
TX-101	E*	D				N/A	1 yr
TX-102	E*	Q	L	W	4*	6 mo.	1 yr
TX-103	E*	Q			4*	6 mo.	1 yr
TX-104	E*	Q			4*	6 mo.	1 yr
TX-105	E*	Q	L (failed)	W	4*	6 mo.	1 yr
TX-106	E*	Q	L	W	4*	6 mo.	1 yr
TX-107	E*	Q			4*	6 mo.	1 yr
TX-108	E*	Q	L	Request (3)	4*	6 mo.	1 yr
TX-109	E*	Q	L	W	8*	6 mo.	1 yr
TX-110	E*	Q	L	W		N/A	1 yr
TX-111	E*	Q	L	W	8*	6 mo.	1 yr
TX-112	E*	Q	L	W	8*	6 mo.	1 yr
TX-113	E*	Q	L	W	8*	6 mo.	1 yr
TX-114	E*	Q	L	W		N/A	1 yr
TX-115	E*	Q	L	W	3*	6 mo.	1 yr

Tank	Surface Level Device (1)	Surface Level Frequency	Liquid Observation Well (LOW)	LOW Frequency	Thermocouple Tree Risers (1)	Temperature Frequency	Dome Elevation Frequency
TX-116	LOW	Q	L (O/C) (6)	W		N/A	1 yr
TX-117	E*	Q	L	W		N/A	1 yr
TX-118	E*	Q	L	W	1*,3*	6 mo.	1 yr
TY-101	E*	Q			3*,4*	6 mo.	2 yr
TY-102	E*	D			4*	6 mo.	2 yr
TY-103	E*	Q	L	W	4*,7*	6 mo.	2 yr
TY-104	E*	D			3*,4*	6 mo.	2 yr
TY-105	E*	Q	L	W	3*	6 mo.	2 yr
TY-106	E*	Q			2*	6 mo.	2 yr
U-101	MT	D			2*	6 mo.	2 yr
U-102	E	Q	L	W	1*	6 mo.	2 yr
U-103	E*	Q	L	W	1*	6 mo.	2 yr
U-104	MT	Q				N/A	2 yr
U-105	E*	Q	L	W	1*	6 mo.	2 yr
U-106	E*	Q	L	W	1*	6 mo.	2 yr
U-107	E* (O/S) (9)	D	L	W	1*	6 mo.	2 yr
U-108	E*	Q	L	W	1*	6 mo.	2 yr
U-109	E*	Q	L	W	1*	6 mo.	2 yr
U-110	E	Q	L	W	1*	6 mo.	2 yr
U-111	E	Q	L	W	5*	6 mo.	2 yr
U-112	MT	Q			5*	6 mo.	2 yr
U-201	MT	D			4*	6 mo.	
U-202	MT	D			4*	6 mo.	
U-203	E	Q			4*	6 mo.	
U-204	E	D			4*	6 mo.	

Footnotes:

1. Any ENRAF (E) or thermocouple tree riser that is followed by an asterisk (*) is connected to TMACS for continuous remote monitoring. If there is no asterisk, only manual readings are obtained. Any equipment connected to TMACS collects data multiple times per day, regardless of required frequency.
2. A-101 LOW riser was damaged during saltwell pumping in February 2002. The LOW has failed and dip tube readings are being taken on saltwell pumping (SWP) data sheets. The LOW is not required for leak detection during SWP activity per OSD-T-151-00031; when the SWP activity is complete, the LOW **be required to be functional. Weight factor and specific gravity readings are currently being taken.**
3. TX-108 LOW is only monitored on request. Last reading was July 1994.
4. **B-105 ENRAF and B-110 electronic data are inconsistent. The ENRAFs are in "fail mode." The LOW is the primary leak detection device for these tanks.**
5. SX-102 LOW is O/S as of 7/17/02. A sharp increase in radiation levels was detected inside the LOW; **Problem Evaluation Request (PER) 2002-3914 was issued. Weight factor and specific gravity readings are required weekly on this tank to avoid an OSD violation. The automatic ENRAF provides daily readings.**
6. TX-116 LOW was breached in August 2002. The ENRAF failed during the LOW installation in March 2002. The ENRAF was removed when the LOW was breached and has not been replaced. The new LOW was not installed in time for the 4th quarter reading for OSD-T-151-00031 compliance. This tank has incurred an LOW OSD violation; PER 2002-6058 was issued, requiring a functional LOW to be installed by February 28, 2003. The LOW is the primary leak detection device. The ENRAF has been recording surface level readings on TMACS since October 31, 2002.
7. BX-111 and BX-112 temperature electronic recording units have failed; they need to be replaced.
8. SX-107 temperatures are inconsistent in TMACS since September 23, 2002. SX-108 temperatures are inconsistent since March 7, 2002; the semiannual reading was last taken July 2, 2002. Manual readings are taken weekly in both tanks.

Footnotes (continued)

9. U-107 ENRAF was discovered in "fail mode." The plummet appears to be stuck in the waste. PER 2002-5971 has been issued to flush the ENRAF. The LOW is the primary leak detection device.

This page intentionally left blank.

APPENDIX C

MISCELLANEOUS UNDERGROUND STORAGE TANKS AND SPECIAL SURVEILLANCE FACILITIES

TABLE C-1. EAST AND WEST AREA MISCELLANEOUS UNDERGROUND STORAGE TANKS AND SPECIAL SURVEILLANCE FACILITIES

ACTIVE - still running transfers through the associated diversion boxes or pipeline encasements

December 31, 2002

FACILITY	LOCATION	PURPOSE (receives waste from:)	WASTE (Gallons)	MONITORED BY	REMARKS
EAST AREA					
241-A-302-A	A Farm	A-151 DB	656	SACS/ENRAF/TMACS	Pumped to AW-105, 7/00
241-ER-311	B Plant	ER-151, ER-152 DB	2985	SACS/ENRAF/Manually	Pumped to AP-108, 7/01
241-AZ-151	AZ Farm	AZ-702 condensate	5905	SACS/ENRAF/TMACS	Volume changes daily - pumped to AZ-101 or AZ-102 as needed.
241-AZ-154	AZ Farm		25	SACS/MT	
244-BX-TK/SMP	BX Complex	DCRT - Receives from several farms	8806	SACS/MT	Pumped to AP-102, 12/30/02.
244-A-TK/SMP	A Complex	DCRT - Receives from several farms	8328	MCS/SACS/WTF	WTF - Data validity uncertain since 4/02 (not primary leak detection method)
A-350	A Farm	Collects drainage	390	MCS/SACS/WTF	WTF (uncorrected) pumped as needed
AR-204	AY Farm	Tanker trucks from various facilities	575	DIP TUBE	Alarms on SACS-pumped to AP-108, 7/00
A-417	A Farm		14255	SACS/WTF(Zipcord)	WTF O/S 6/01; readings taken by zip cord
CR-003-TK/SUMP	C Farm	DCRT	2984	MT/ZIP CORD	Zip cord in sump O/S; water intrusion, 1/98
WEST AREA					
241-TX-302-C	TX Farm	TX-154 DB	171	SACS/ENRAF	Now on TMACS.
241-U-301-B	U Farm	U-151, U-152, U-153, U-252 DB	7922	SACS/ENRAF/Manually	Returned to service 12/30/93
241-UX-302-A	U Plant	UX-154 DB	4236	SACS/ENRAF/Manually	Recalibrated 7/15/02 after 6/01/02 repair.
241-S-304	S Farm	S-151 DB	130	SACS/ENRAF/Manually	Replaced S-302-A in 10/91; ENRAF installed 7/98. Sump not alarming.
244-S-TK/SMP	S Farm	From Single-Shell Tanks for transfer to SY-102	6683	SACS/Manually	WTF (uncorrected). Pumped to SY-102, 12/6/02.
244-TX-TK/SMP	TX Farm	From Single-Shell Tanks and Plutonium Finishing Plant for for transfer to SY-102	15154	SACS/Manually	MT - pumped to SY-102, 6/02.
Vent Station Catch Tank		Cross Site Transfer Line	411	SACS/Manually	MT

Total Active Facilities	17

LEGEND:		
	DB -	Diversion Box
	DCRT -	Double-Contained Receiver Tank
	TK, SMP -	Tank, Sump
	ENRAF -	Surface Level Measurement Devices
	MT -	Manual Tape - Surface Level Measurement Device
	Zip Cord -	Surface Level Measurement Device
	WTF-	Weight Factor - can be recorded as WTF, CWF (corrected) and WTF (uncorrected)
	SACS -	Surveillance Automated Control System
	MCS -	Monitor and Control System
	Manually -	Not connected to any automated system
	O/S -	Out of Service

TABLE C-2. EAST AREA INACTIVE MISCELLANEOUS UNDERGROUND STORAGE TANKS AND SPECIAL SURVEILLANCE FACILITIES (CURRENTLY MANAGED BY TANK FARM CONTRACTOR)

INACTIVE - no longer receiving waste transfers

December 31, 2002

FACILITY	*LOCATION*	*RECEIVED WASTE FROM: (or descrip.)*	*WASTE (Gallons)*	*MONITORED BY*	*REMARKS*
209-E-TK-111	209 E Bldg	Decon Catch Tank	Unknown	NM	Removed from service 1988
241-A-302-B	A Farm	A-152 DB	5876	SACS/MT	Isolated 1985, Project B-138 Interim Stabilized 1990, Rain intrusion
241-AX-151	N of PUREX	PUREX	Unknown	NM	Isolated 1985 .
241-AX-152	AX Farm	AX-152 DB	0	SACS/MT	Declared Assumed Leaker; pumped to AY-102 3/1/01, no longer being used
241-B-301-B	B Farm	B-151, B-152, B-153, B-252 DB	22250	NM	Isolated 1985 (1)
241-B-302-B	B Farm	B-154 DB	4930	NM	Isolated 1985 (1)
241-BX-302-A	BX Farm	BR-152, BX-153, BXR-152, BYR-152 DB	840	NM	Isolated 1985 (1)
241-BX-302-B	BX Farm	BX-154 DB	1040	NM	Isolated 1985 (1)
241-BX-302-C	BX Farm	BX-155 DB	870	NM	Isolated 1985 (1)
241-BY-ITS2-Tk 1	BY Farm	Vapor condenser	Unknown	NM	Isolated
241-BY-ITS2-Tk 2	BY Farm	Heater Flush Tank	Unknown	NM	Stabilized 1977
241-C-301-C	C Farm	C-151, C-152, C-153, C-252 DB	10470	NM	Isolated 1985 (1)
241-ER-311A	SW B Plant	ER-151 DB	Empty	NM	Abandoned in place 1954
244-AR Vault	A Complex	Between farms & B-Plant	Unknown	NM	Not actively being used, systems activated for final clean out.
244-BXR-TK/SMP-001	BX Farm	Transfer lines	7200	NM	Interim Stabilization 1985 (1)
244-BXR-TK/SMP-002	BX Farm	Transfer lines	2180	NM	Interim Stabilization 1985 (1)
244-BXR-TK/SMP-003	BX Farm	Transfer lines	1810	NM	Interim Stabilization 1985 (1)
244-BXR-TK/SMP-011	BX Farm	Transfer lines	7100	NM	Interim Stabilization 1985 (1)

Total East Area Inactive Facilities	18

LEGEND:		
	DB -	Diversion Box
	MT -	Manual Tape
	SACS -	Surveillance Automated Control System
	TK, SMP -	Tank, Sump
	NM -	Not Monitored

(1) SOURCE: WHC-SD-WM-TI-356, "Waste Storage Tank Status & Leak Detection Criteria," Rev. 0, September 30, 1988

TABLE C-3. WEST AREA INACTIVE MISCELLANEOUS UNDERGROUND STORAGE TANKS AND SPECIAL SURVEILLANCE FACILITIES (CURRENTLY MANAGED BY TANK FARM CONTRACTOR)

INACTIVE - no longer receiving waste transfers

December 31, 2002

FACILITY	LOCATION	RECEIVED WASTE FROM:(or descrip)	WASTE (Gallons)	MONITORE BY	REMARKS
213-W-TK-1	E of 213-W Compactor Facility	Water Retention Tank	Unknown	NM	Contains only water
231-W-151-001	N. of Z Plant	231-Z Floor drains	Unknown	NM	Inactive, last data 1974
231-W-151-002	N. of Z Plant	231-Z Floor drains	Unknown	NM	Inactive, last data 1974
241-S-302	S Farm	240-S-151 DB	8252	SACS/ENRAF	Assumed Leaker EPDA 85-04
241-S-302-A	S Farm	241-S-151 DB	0		Assumed Leaker TF-EFS-90-042
	Partially filled with grout 2/91, determined still to be an assumed leaker after leak test. Manual FIC readings are unobtainable due to dry grouted surface. CASS monitoring system retired 2/23/99; intrusion readings discontinued. S-304 replaced S-302-A				
241-S-302-B	S Farm	S Encasements	Empty	NM	Isolated 1985 (1)
241-SX-302 (SX-304)	SX Farm	SX-151 DB, 151 TB	Unknown	NM	Isolated 1987
241-T-301	T Farm	DB T-151, -151, -153, -252	Unknown	NM	Isolated 1985 (241-T-301B)
241-TX-302	TX Farm	TX-153 DB	Unknown	NM	Isolated 1985 (1)
241-TX-302-X-B	TX Farm	TX Encasements	Unknown	NM	Isolated 1985 (1)
241-TX-302-B	TX Farm	TX-155 DB	3285	SACS/ENRAF	New ENRAF installed 9/10/02 resulting in change in volume reading
241-TX-302-B(R)	E. of TX Farm	TX-155 DB	Unknown	NM	Isolated
241-TY-302-A	TY Farm	TX-153 DB	Unknown	NM	Isolated 1985 (1)
241-TY-302-B	TY Farm	TY Encasements	Empty	NM	Isolated 1985 (1)
241-Z-8	E. of Z Plant	Recuplex waste	Unknown	NM	Isolated, 1974, 1975
242-T-135	T Evaporator	T Evaporator	Unknown	NM	Isolated
242-TA-R1	T Evaporator	Z Plant waste	Unknown	NM	Isolated
243-S-TK-1	N. of S Farm	Personnel Decon. Facility	Empty	NM	Isolated
244-TXR-TK/SMP-001	TX Farm	Transfer lines	Unknown	NM	Interim Stabilized, MT removed 1984 (1)
244-TXR-TK/SMP-002	TX Farm	Transfer lines	Unknown	NM	Interim Stabilized, MT removed 1984 (1)
244-TXR-TK/SMP-003	TX Farm	Transfer lines	Unknown	NM	Interim Stabilized, MT removed 1984 (1)
244-UR-001 Vault TK	U-Farm	Tank, Sump and Cell	4220	NM	Stabilized 1985
244-UR-002 Vault TK	U-Farm	Tank, Sump and Cell	1400	NM	Stabilized 1985
244-UR-003 Vault Tk	U-Farm	Tank, Sump and Cell	5996	NM	Stabilized 1985
244-UR-004 Vault Tk	U-Farm	Tank, Sump and Cell	Empty	NM	Stabilized 1985

Total West Area Inactive Facilities 25

LEGEND:		
	DB, TB -	Diversion Box, Transfer Box
	CASS -	Computer Automated Surveillance System
	FIC, ENRAF -	Surface Level Measurement Devices
	MT -	Manual Tape - Surface Level Measurement Device
	TK, SMP -	Tank, Sump
	SACS -	Surveillance Automated Control System
	R -	Replacement
	NM -	Not Monitored

(1) SOURCE: WHC-SD-WM-TI-356, "Waste Storage Tank Status & Leak Detection Criteria," Rev. 0, September 30, 1988

APPENDIX D

GLOSSARY OF TERMS

TABLE D-1. GLOSSARY OF TERMS

1. DEFINITIONS

WASTE TANKS - General

Waste Tank Safety Issue
A potentially unsafe condition in the handling of waste material in underground storage tanks that requires corrective action to reduce or eliminate the unsafe condition. There are currently no waste tank safety issues.

Characterization
Characterization is understanding the Hanford tank waste chemical, physical, and radiological properties to the extent necessary to ensure safe storage and interim operation, and ultimate disposition of the waste.

WASTE TYPES

Aging Waste (AW)
High level, first cycle solvent extraction waste from the PUREX plant (NCAW).

Concentrated Complexant (CC)
Concentrated product from the evaporation of dilute complexed waste.

Concentrated Phosphate Waste (CP)
Waste originating from the decontamination of the N Reactor in the 100 N Area. Concentration of this waste produces concentrated phosphate waste.

Dilute Complexed Waste (DC)
Characterized by a high content of organic carbon including organic complexants: ethylenediaminetetraacetic acid (EDTA), citric acid, and hydroxyethyl-ethylenediaminetriacetic acid (HEDTA), were the major complexants used. Main sources of DC waste in the DST system are saltwell liquid inventory (from SSTs).

Dilute Non-Complexed Waste (DN)
Low activity liquid waste originating from S and T Plants, the 300 and 400 Areas, PUREX facility (decladding supernatant and miscellaneous wastes), 100 N Area (sulfate waste), B Plant, saltwells, and PFP (supernatant).

Drainable Interstitial Liquid (DIL)
Interstitial liquid that is not held in place by capillary forces and will, therefore, migrate or move by gravity.

Double-Shell Slurry (DSS)
Waste that exceeds the sodium aluminate saturation boundary in the evaporator without exceeding receiver tank composition limits. For reporting purposes, DSS is considered a solid.

Double-Shell Slurry Feed (DSSF)
Waste concentrated just before reaching the sodium aluminate saturation boundary in the evaporator without exceeding receiver tank composition limits. This form is not as concentrated as DSS.

Evaporator Feed Tank (EVFD)
Dilute waste staged for evaporation; waste type will vary (usually DN or DC).

Slurry Receiver Tank (SRCVR)
Concentrated waste produced by evaporation; waste type will vary (usually DSSF or CC).

Supernatant Liquid

The liquid above the solids or in large liquid pools covered by floating solids in waste storage tanks.

INTERIM STABILIZATION (Single-Shell Tanks only)

Interim Stabilized (IS)

A tank which contains less than 50 Kgallons of drainable interstitial liquid and less than 5 Kgallons of supernatant. If the tank was jet pumped to achieve interim stabilization, then the jet pump flow or saltwell screen inflow must also have been at or below 0.05 gpm before interim stabilization criteria are met.

Jet Pump

The jet pump system includes 1) a jet assembly with foot valve mounted to the base of two pipes that extend from the top of the well casing to near the bottom of the well casing inside the saltwell screen, 2) a centrifugal pump to supply power fluid to the down-hole jet assembly, 3) flexible or rigid transfer jumpers, 4) a flush line, and 5) a flowmeter. The jumpers contain piping, valves, and pressure and limit switches.

The centrifugal pump and jet assembly are needed to pump the interstitial liquid from the saltwell screen into the pump pit, nominally a 40-foot elevation rise. The power fluid passes through a nozzle in the jet assembly and acts to convert fluid pressure head to velocity head, thereby reducing the pressure in the jet assembly chamber. The reduction in pressure allows the interstitial liquid to enter the jet assembly chamber and mix with the power fluid. Velocity head is converted to pressure head above the nozzle, lifting power fluid, and interstitial liquid to the pump pit. Pumping rates vary from 0.05 to about 4 gpm.

Saltwell Screen

The saltwell system is a 10-inch diameter saltwell casing consisting of a stainless steel saltwell screen welded to a Schedule 40 carbon steel pipe. The casing and screen are to be inserted into the 12-inch tank riser located in the pump pit. The stainless steel screen portion of the system will extend through the tank waste to near the bottom of the tank. The saltwell screen portion of the casing is an approximately 10-foot length of 300 Series, 10-inch diameter, stainless steel pipe with screen openings (slots) of 0.05 inches.

Emergency Pumping Trailer

A 45-foot tractor-type trailer is equipped to provide storage space and service facilities for emergency pumping equipment: this consists of two dedicated jet pump jumpers and two jet pumps, piping and dip tubes for each, two submersible pumps and attached piping, and a skid-mounted Weight Factor Instrument Enclosure with an air compressor and electronic recording instruments. The skid also contains a power control station for the pumps, pump pit leak detection, and instrumentation. A rack for over 100 feet of overground double-contained piping is also in the trailer.

INTRUSION PREVENTION (ISOLATION) (Single-Shell Tanks only)

Partially Interim Isolated (PI)

The administrative designation reflecting the completion of the physical effort required for Interim Isolation except for isolation of risers and piping that is required for jet pumping or for other methods of stabilization.

Interim Isolated (II)

The administrative designation reflecting the completion of the physical effort required to minimize the addition of liquids into an inactive storage tank, process vault, sump, catch tank, or diversion box. In June 1993 the term "Interim Isolation" was replaced by "Intrusion Prevention."

Intrusion Prevention (IP)

Intrusion Prevention is the administrative designation reflecting the completion of the physical effort required to minimize the addition of liquids into an inactive storage tank, process vault, sump, catch tank, or diversion box. Under no circumstances are electrical or instrumentation devices disconnected or disabled during the intrusion prevention process (with the exception of the electrical pump).

Retrieval (R)

The process of removing, to the maximum extent practical, all the waste from a given underground storage tank. The retrieval process is selected specific to each tank and accounts for the waste type stored and the access and support systems available. Generally, retrieval is focused on removal of solids from the tank.

Final Closure

Final closure of the operable units (tank farms) shall be defined as regulatory approval of completion of closure actions and commencement of post-closure actions. For the purposes of this agreement (Hanford Federal Facility Agreement and Consent Order Change Control Form, Change Number M-45-02-03), all units located within the boundary of each tank farm will be closed in accordance with Washington Administrative Code 173-303-610. In evaluating closure operations for single-shell tanks, contaminated soil, and ancillary equipment, the Washington State Department of Ecology and the Washington State Environmental Protection Agency will consider cost, technical practicability, and potential exposure to radiation. Closure of all units within the boundary of a given tank farm will be addressed in a closure plan for single-shell tanks.

TANK INTEGRITY

Sound

The integrity classification of a waste storage tank for which surveillance data indicate no loss of liquid attributed to a breach of integrity.

Assumed Leaker

The integrity classification of a waste storage tank for which surveillance data indicate a loss of liquid attributed to a breach of integrity.

Assumed Re-Leaker

A condition that exists after a tank has been declared as an "assumed leaker" and then the surveillance data indicate a new loss of liquid attributed to a breach of integrity.

TANK INVESTIGATION

Intrusion

A term used to describe the infiltration of liquid into a waste tank.

SURVEILLANCE INSTRUMENTATION

Drywells

Historically, the drywells were monitored with gross logging tools as part of a secondary leak monitoring system. In some cases, neutron-moisture sensors were used to monitor moisture in the soil as a function of well depth, which could be indicative of tank leakage. The routine gross gamma logging data were stored electronically from 1974 through 1994. The routine gross gamma logging program ended in 1994. A program was initiated in 1995 to log each of the available drywells in each tank farm with a spectral gamma logging system. The spectral gamma logging system provides quantitative values for gamma-emitting radionuclides. The baseline spectral gamma logging database is available electronically.

Repeat spectral drywell scans are not part of the established Tank Farm leak detection program, but they can be run on request if special needs arise. A select subset of drywells is routinely monitored by the Vadose Zone Characterization Project to assess movement of gamma-emitting radionuclides in the subsurface.

Laterals

Laterals are horizontal drywells positioned under single-shell waste storage tanks to detect radionuclides in the soil which could be indicative of tank leakage. These drywells can be monitored by radiation detection probes. Laterals are 4-inch inside diameter steel pipes located 8 to 10 feet below the tank's concrete base.

There are three laterals per tank. Laterals are located only in A and SX farms. There are currently no functioning laterals and no plan to prepare them for use.

Surface Levels

The surface level measurements in all waste storage tanks are monitored by manual or automatic conductivity probes, and recorded and transmitted or entered into the Surveillance Analysis Computer System.

Automatic FIC

An automatic waste surface level measurement device is manufactured by the Food Instrument Corporation (FIC). The instrument consists of a conductivity electrode (plummet) connected to a calibrated steel tape, a steel tape reel housing and a controller that automatically raises and lowers the plummet to obtain a waste surface level reading. The controller can provide a digital display of the data and until February 1999, the majority of the FICs transmitted readings to the Computer Automated Computer Surveillance System (CASS). Since CASS retirement, all FIC gauges are read manually. FICs are being replaced by ENRAF detectors (see below).

ENRAF 854 ATG Level Detector

FICs and some manual tapes are in the process of being replaced by the ENRAF ATG 854 level detector. The ENRAF gauge, fabricated by ENRAF Incorporated, determines waste level by detecting variations in the weight of a displacer suspended in the tank waste. The displacer is connected to a wire wound onto a precision measuring drum. A change in the waste level causes a change in the weight of the displacer which will be detected by the force transducer. Electronics within the gauge causes the servo motor to adjust the position of the displacer and compute the tank level based on the new position of the displacer drum. The gauge displays the level in decimal inches. The first few ENRAFs that received remote reading capability transmit liquid level data via analog output to the TMACS. The remaining ENRAFs and future installations will transmit digital level data to TMACS via an ENRAF Computer Interface Unit (CIU). The CIU allows fully remote communication with the gauge, minimizing tank farm entry.

Annulus

The annulus is the space between the inner and outer shells on DSTs only. Drain channels in the insulating and/or supporting concrete carry any leakage to the annulus space where conductivity probes are installed. The annulus conductivity probes and radiation detectors are the primary means of leak detection for all DSTs.

Liquid Observation Well (LOW)

In-tank liquid observation wells are used for monitoring the ILL in single-shell tanks. The wells are usually constructed of fiberglass or TEFZEL-reinforced epoxy-polyester resin (TEFZEL is a trademark of E. I. du Pont de Nemours & Company). There are a few LOWs constructed of steel. LOWs are sized to extend to within 1 inch of the bottom of the waste tank, are sealed at their bottom ends, and have a nominal outside diameter of 3.5 inches. Gamma and neutron probes are used to monitor changes in the ILL, and can indicate intrusions or leakage by increases or decreases in the ILL. There are 70 LOWs installed in SSTs that contain or are capable of containing greater than 50 Kgallons of drainable interstitial liquid. All of the LOWs are monitored weekly with the exception of TX-108 which is monitored by request only. Two LOWs installed in DSTs SY-102 and AW-103 are used for special, rather than routine, surveillance purposes only.

Thermocouple (TC)

A thermocouple is a thermoelectric device used to measure temperature. More than one thermocouple element on a device (probe) is called a thermocouple tree. In DSTs there may be one or more thermocouple trees in risers in the primary tank. In addition, in DSTs only, there are TC elements installed in the insulating concrete, the lower primary tank knuckle, the secondary tank concrete foundation, and in the outer structural concrete.

These monitor temperature gradients within the concrete walls, bottom of the tank, and the domes. In SSTs, one or more thermocouples may be installed directly in a tank, although some SSTs do not have any trees

installed. A single TC element may be installed in a riser or lowered down an existing riser or LOW. There are also four thermocouple laterals beneath tank 105-A in which temperature readings are taken in 34 TC elements.

In-tank Photographs and Videos

In-tank photographs and videos may be taken to aid in resolving in-tank measurement anomalies and determine tank integrity. Photographs and videos help determine sludge and liquid levels by visual examination.

ACRONYMS - Waste Type acronyms begin on Page D-2

BBI	Best Basis Inventory
CCS	Controlled, Clean, and Stable (tank farms)
CH2M HILL	CH2M HILL Hanford Group, Inc.
DCRT	Double-Contained Receiver Tank
DST	Double-Shell Tank
FSAR	Final Safety Analysis Report effective October 18, 1999
Gal	Gallon
GPM	Gallons Per Minute
II	Interim Isolated
Kgal	Kilogallons
IP	Intrusion Prevention Completed
IS	Interim Stabilized
MT/FIC/ ENRAF	Manual Tape, Food Instrument Corporation, ENRAF Corporation (surface level measurement devices)
OSD	Operating Specifications Document
PI	Partial Interim Isolated
PER	Problem Evaluation Request
PFP	Plutonium Finishing Plant
SAR	Safety Analysis Report
SHMS	Standard Hydrogen Monitoring System
SST	Single-Shell Tank
SWL	Salt Well Liquid
TMACS	Tank Monitor and Control System

TPA — Hanford Federal Facility Consent and Compliance Order, "Washington State Department of Ecology, U.S. Environmental Protection Agency, and U.S. Department of Energy," as amended (Tri-Party Agreement)

TSR — Technical Safety Requirement

USQ — Unreviewed Safety Question

Additional definitions (used in the SST Inventory columns) follow: (IL, DIL, DLR, PLR, etc.)

2. INVENTORY AND STATUS BY TANK – COLUMN VOLUME CALCULATIONS AND DEFINITIONS FOR TABLE B-1 (Single-Shell Tanks only)

COLUMN HEADING	COLUMN VOLUME CALCULATIONS (Underlined)/DEFINITIONS
Total Waste	Solids volume plus Supernatant Liquid. Solids include sludge and saltcake (see definitions below).
Supernatant Liquid (1)	May be either measured or estimated. Supernatant is either the estimated or measured liquid floating on the surface of the waste or under a floating solids crust. In-tank photographs or videos are useful in estimating the liquid volumes; liquid floating on solids and core sample data are useful in estimating large liquid pools under a floating crust.
Drainable Interstitial Liquid (DIL) (1)	This is initially calculated. Drainable interstitial liquid is calculated based on the saltcake and sludge volumes, using calculated porosity values from past pumping or actual data for each tank. Interstitial liquid is liquid that fills the interstitial spaces of the solids waste. The sum of the interstitial liquid contained in saltcake and sludge minus an adjustment for capillary height is the initial volume of drainable interstitial liquid.
Pumped This Month	Net total gallons of liquid pumped from the tank during the month. If supernatant is present, pump production is first subtracted from the supernatant volume. The remainder is then subtracted from the drainable interstitial liquid volume.
Total Pumped (1)	Cumulative net total gallons of liquid pumped from 1979 to date.
Drainable Liquid Remaining (DLR) (1)	Supernatant plus Drainable Interstitial Liquid. The total Drainable Liquid Remaining is the sum of drainable interstitial liquid and supernatant.
Pumpable Liquid Remaining (PLR) (1)	Drainable Liquid Remaining minus unpumpable volume. Not all drainable interstitial liquid is pumpable.
Sludge	Solids formed during sodium hydroxide additions to waste. Sludge was usually in the form of suspended solids when the waste was originally received in the tank from the waste generator. In-tank photographs or videos may be used to estimate the volume.
Saltcake	Results from crystallization and precipitation after concentration of liquid waste, usually in an evaporator. If saltcake is layered over sludge, it is only possible to measure total solids volume. In-tank photographs or videos may be used to estimate the saltcake volume.
Solids Volume Update	Indicates the latest update of any change in the solids volume.
Solids Update Source - See Footnote	Indicates the source or basis of the latest solids volume update.

COLUMN HEADING	COLUMN VOLUME CALCULATIONS (Underlined)/DEFINITIONS
Last In-Tank Photo	Date of last in-tank photographs taken.
Last In-Tank Video	Date of last in-tank video taken.
See Footnotes for These Changes	Indicates any change made the previous month. A footnote explanation for the change follows the Inventory and Status by Tank Appendix (Table B-1).

(1) Volumes for supernatant, DIL, DLR, and PLR are not shown in these columns until interim stabilization is completed. Total gallons pumped, total waste, sludge, and saltcake volumes are shown and adjusted based on actual pumping volumes.

APPENDIX E

TANK CONFIGURATION AND FACILITIES CHARTS

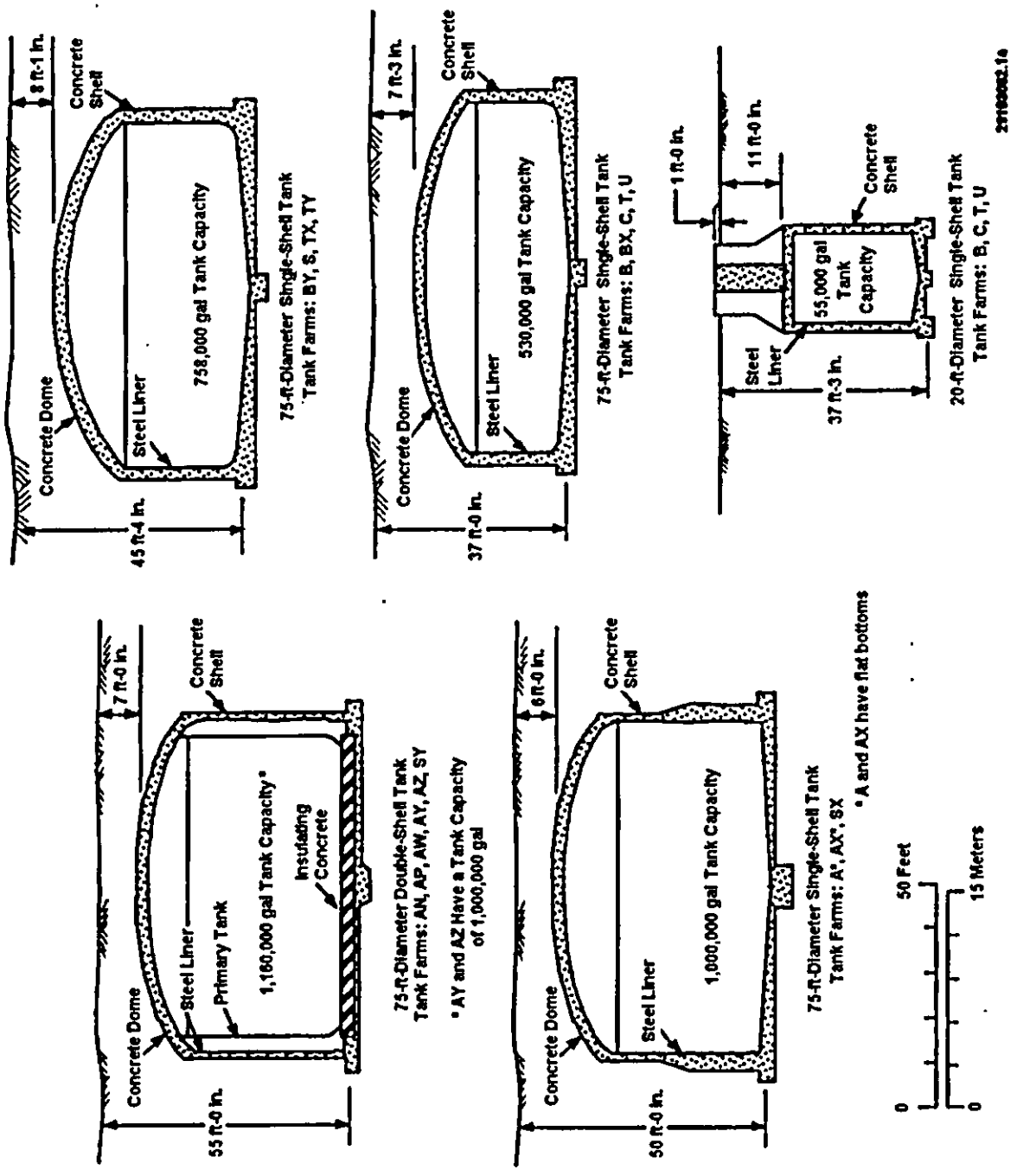

Figure E-1. High-Level Waste Tank Configurations

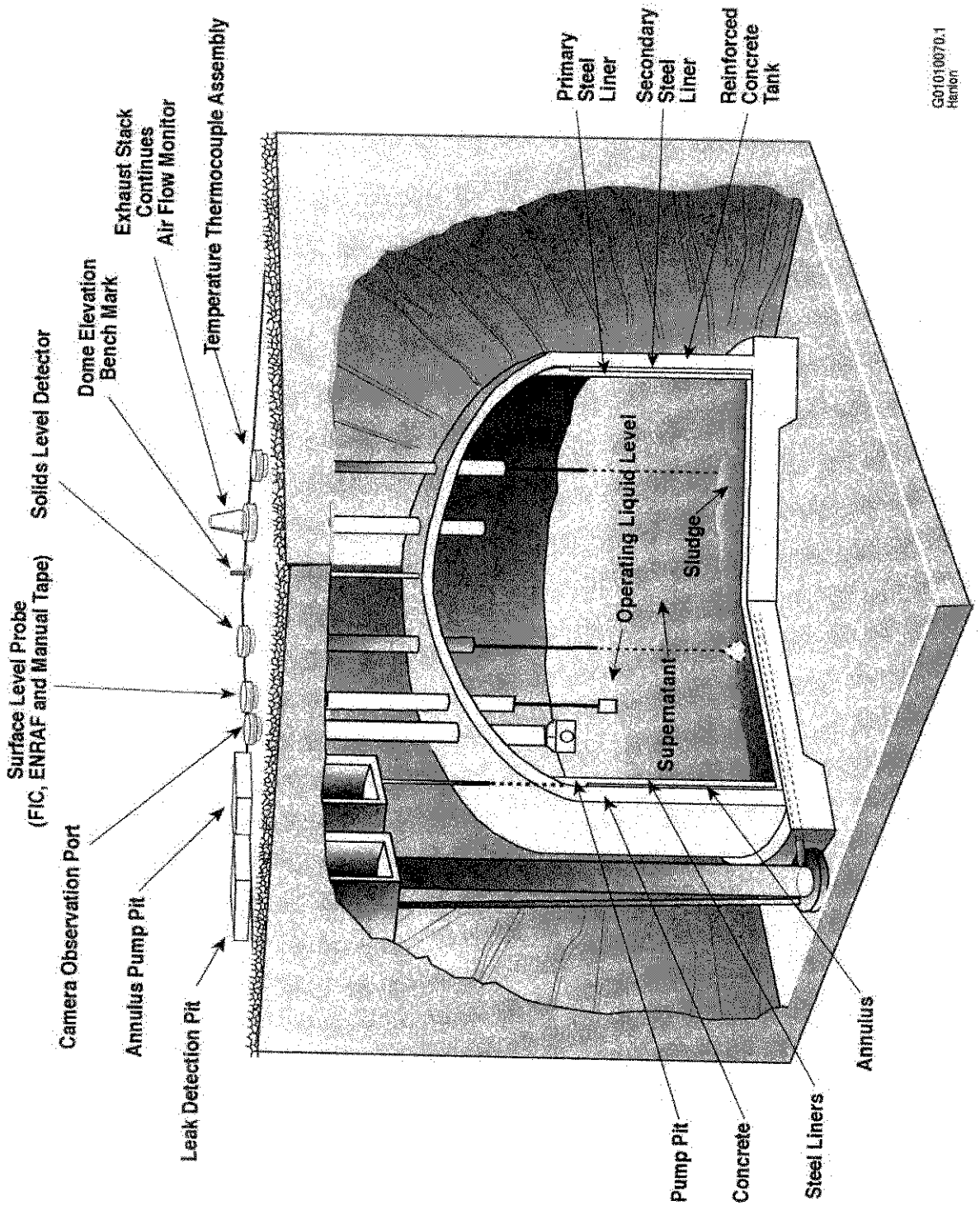

Figure E-2. Double-Shell Tank Instrumentation Configuration

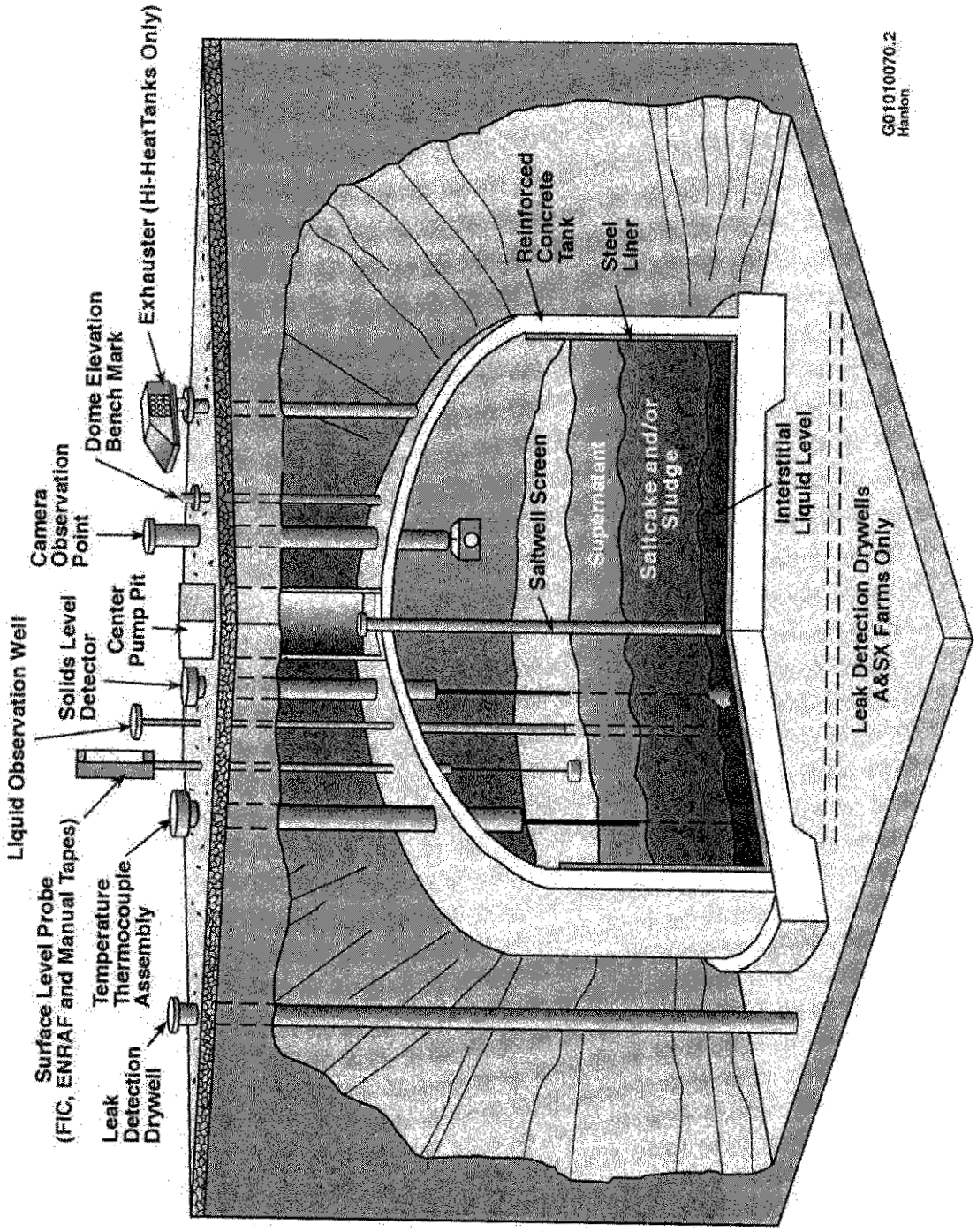

Figure E-3. Single-Shell Tank Instrumentation Configuration

200 East Tank Waste Contents

A-Tank Farm- 1954-55
6 @ 1,000,000 GAL. Tank Capacity, Single-Shell

Tank	Sludge (Kgal)	Saltcake (Kgal)	Supernatant (Kgal)
241-A-101	3	395	1
241-A-102	0	36	2
241-A-103	2	364	4
241-A-104	28	0	0
241-A-105	37	0	0
241-A-106	50	29	0

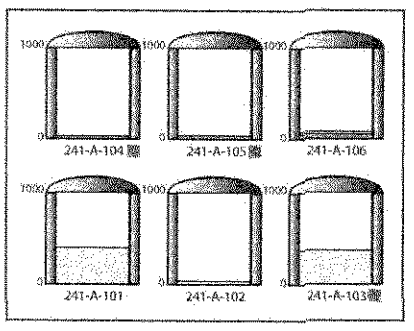

AN-Tank Farm- 1981
7 @ 1,160,000 GAL. Tank Capacity, Double-Shell

Tank	Sludge (Kgal)	Saltcake (Kgal)	Supernatant (Kgal)
241-AN-101	0	0	253
241-AN-102	0	134	943
241-AN-103	0	459	498
241-AN-104	0	445	609
241-AN-105	0	509	618
241-AN-106	0	17	139
241-AN-107	0	237	846

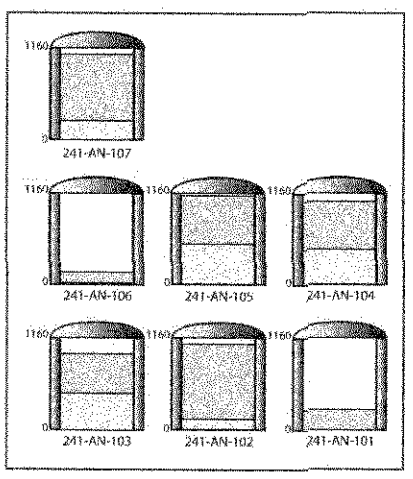

AP-Tank Farm- 1986
8 @ 1,160,000 GAL. Tank Capacity, Double-Shell

Tank	Sludge (Kgal)	Saltcake (Kgal)	Supernatant (Kgal)
241-AP-101	0	0	1113
241-AP-102	23	0	1125
241-AP-103	0	0	282
241-AP-104	0	0	1105
241-AP-105	0	89	1042
241-AP-106	0	0	1139
241-AP-107	0	0	1122
241-AP-108	0	0	258

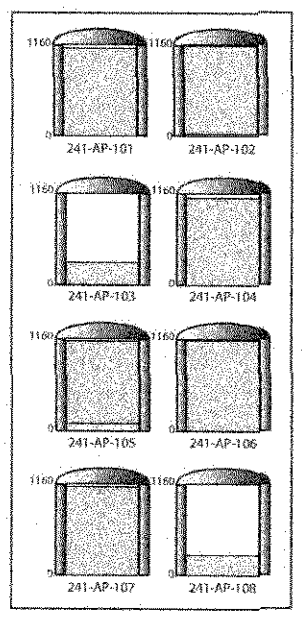

AW-Tank Farm- 1980
6 @ 1,160,000 GAL. Tank Capacity, Double-Shell

Tank	Sludge (Kgal)	Saltcake (Kgal)	Supernatant (Kgal)
241-AW-101	0	396	732
241-AW-102	30	0	924
241-AW-103	273	40	787
241-AW-104	66	157	89
241-AW-105	263	0	160
241-AW-106	0	239	656

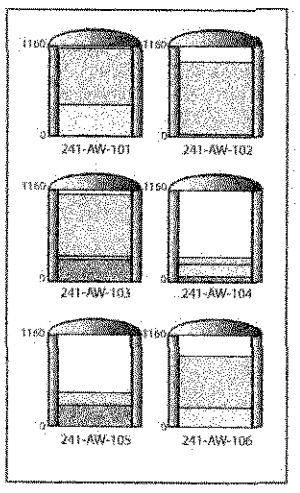

AX-Tank Farm- 1965-66
4 @ 1,000,000 GAL. Tank Capacity, Single-Shell

Tank	Sludge (Kgal)	Saltcake (Kgal)	Supernatant (Kgal)
241-AX-101	3	324	0
241-AX-102	6	24	0
241-AX-103	8	100	0
241-AX-104	7	0	0

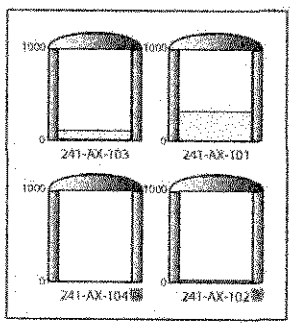

AY-Tank Farm- 1971-76
2 @ 1,000,000 GAL. Tank Capacity, Double-Shell

Tank	Sludge (Kgal)	Saltcake (Kgal)	Supernatant (Kgal)
241-AY-101	96	0	84
241-AY-102	171	0	510

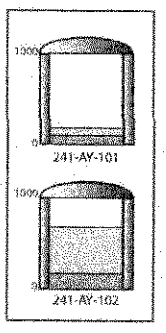

AZ-Tank Farm- 1975-76
2 @ 1,000,000 GAL. Tank Capacity, Double-Shell

Tank	Sludge (Kgal)	Saltcake (Kgal)	Supernatant (Kgal)
241-AZ-101	52	0	942
241-AZ-102	105	0	883

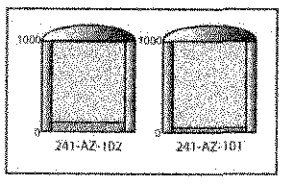

B-Tank Farm- 1945-47
12 @ 530,000 GAL. Tank Capacity, Single-Shell
4 @ 55,000 GAL. Tank Capacity, Single-Shell

Tank	Sludge (Kgal)	Saltcake (Kgal)	Supernatant (Kgal)
241-B-101	28	81	0
241-B-102	0	28	4
241-B-103	1	55	0
241-B-104	309	65	0
241-B-105	28	262	0
241-B-106	121	0	1
241-B-107	86	75	0
241-B-108	27	65	0
241-B-109	50	75	0
241-B-110	244	0	1
241-B-111	241	0	1
241-B-112	15	17	3
241-B-201	30	0	0
241-B-202	29	0	0
241-B-203	51	0	1
241-B-204	50	0	1

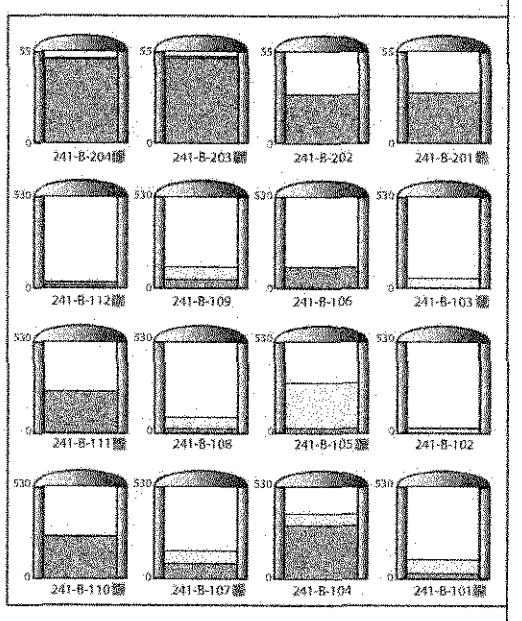

BX- Tank Farm- 1948-50
12 @ 530,000 GAL. Tank Capacity, Single-Shell

Tank	Sludge (Kgal)	Saltcake (Kgal)	Supernatant (Kgal)
241-BX-101	48	0	0
241-BX-102	112	0	0
241-BX-103	62	0	11
241-BX-104	97	0	3
241-BX-105	67	0	5
241-BX-106	38	0	0
241-BX-107	347	0	0
241-BX-108	31	0	0
241-BX-109	193	0	0
241-BX-110	65	139	1
241-BX-111	32	157	0
241-BX-112	163	0	1

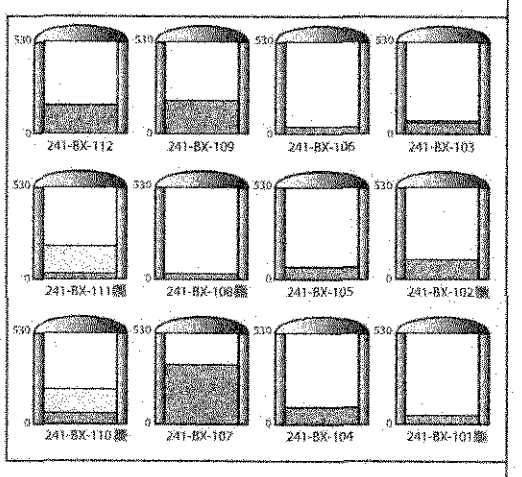

BY-Tank Farm- 1950-51
12 @ 758,000 GAL. Tank Capacity, Single-Shell

Tank	Sludge (Kgal)	Saltcake (Kgal)	Supernatant (Kgal)
241-BY-101	37	333	0
241-BY-102	0	277	0
241-BY-103	9	407	0
241-BY-104	45	313	0
241-BY-105	48	410	0
241-BY-106	32	472	0
241-BY-107	15	257	0
241-BY-108	40	182	0
241-BY-109	24	253	0
241-BY-110	43	323	0
241-BY-111	0	302	0
241-BY-112	2	284	0

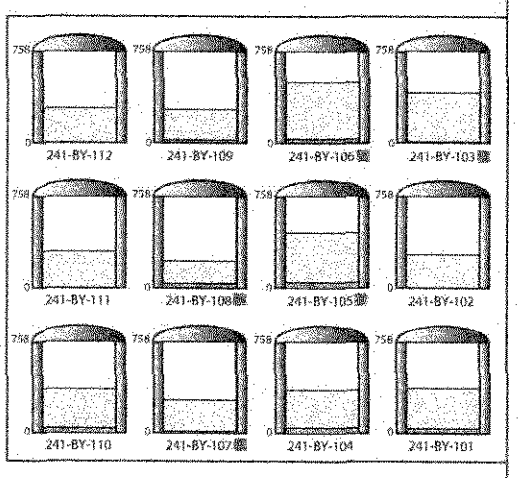

C-Tank Farm- 1946-53
12 @ 530,000 GAL. Tank Capacity, Single-Shell
4 @ 55,000 GAL. Tank Capacity, Single-Shell

Tank	Sludge (Kgal)	Saltcake (Kgal)	Supernatant (Kgal)
241-C-101	88	0	0
241-C-102	316	0	0
241-C-103	94	0	2
241-C-104	259	0	0
241-C-105	132	0	0
241-C-106	6	0	30
241-C-107	248	0	0
241-C-108	66	0	0
241-C-109	63	0	0
241-C-110	177	0	1
241-C-111	57	0	0
241-C-112	104	0	0
241-C-201	1	0	0
241-C-202	1	0	0
241-C-203	3	0	0
241-C-204	3	0	0

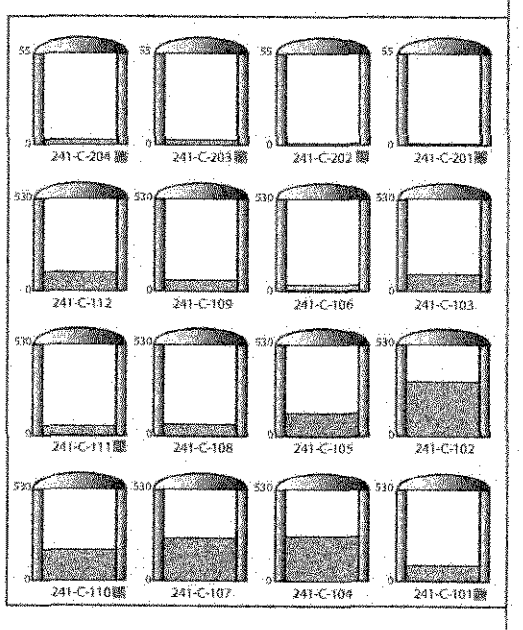

LEGEND: Sludge, Saltcake, Supernatant, Available Space, Assumed/Confirmed Leaker

Data Derived From Waste Tank Summary Report Dated 12/31/02

CH2MHILL

Figure E-4

200 West Tank Waste Contents

S-Tank Farm- 1950-51
12 @ 758,000 GAL.Tank Capacity, Single-Shell

Tank	Sludge (Kgal)	Saltcake (Kgal)	Supernatant (Kgal)
241-S-101	122	277	0
241-S-102	22	417	0
241-S-103	9	227	1
241-S-104	132	156	0
241-S-105	2	404	0
241-S-106	0	455	0
241-S-107	320	20	0
241-S-108	5	545	0
241-S-109	13	520	0
241-S-110	96	293	0
241-S-111	89	390	0
241-S-112	6	609	0

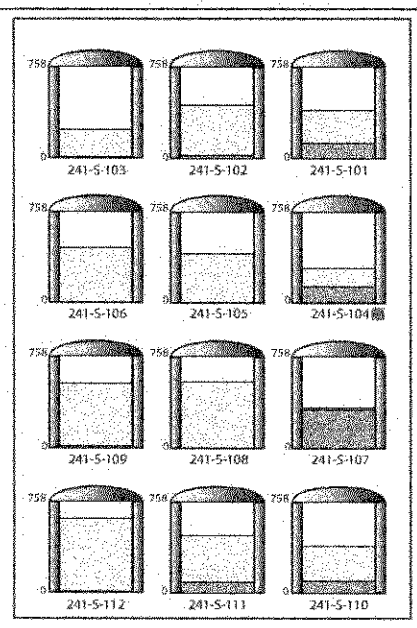

TX-Tank Farm- 1947-48
18 @ 758,000 GAL.Tank Capacity, Single-Shell

Tank	Sludge (Kgal)	Saltcake (Kgal)	Supernatant (Kgal)
241-TX-101	74	17	0
241-TX-102	2	215	0
241-TX-103	0	145	0
241-TX-104	34	32	3
241-TX-105	8	568	0
241-TX-106	5	343	0
241-TX-107	0	30	0
241-TX-108	6	123	0
241-TX-109	363	0	0
241-TX-110	37	430	0
241-TX-111	43	322	0
241-TX-112	0	634	0
241-TX-113	93	546	0
241-TX-114	4	528	0
241-TX-115	8	546	0
241-TX-116	66	532	0
241-TX-117	29	452	0
241-TX-118	0	256	0

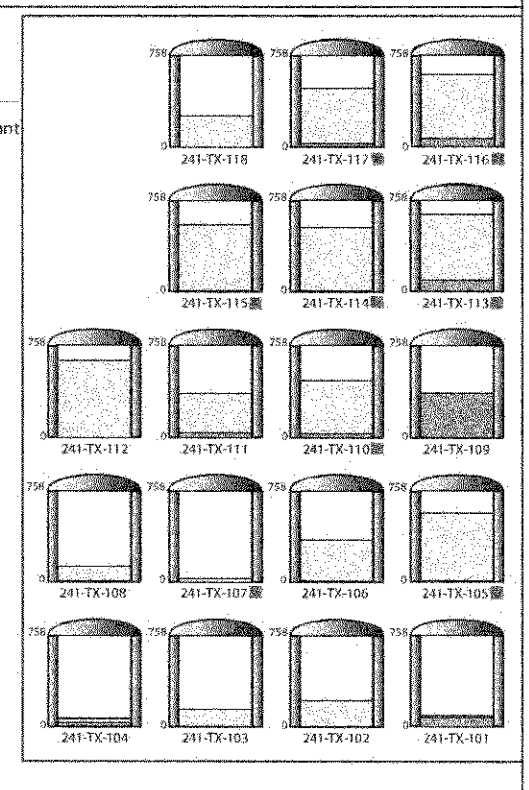

SX-Tank Farm- 1953-54
15 @ 1,000,000 GAL.Tank Capacity, Single-Shell

Tank	Sludge (Kgal)	Saltcake (Kgal)	Supernatant (Kgal)
241-SX-101	144	269	0
241-SX-102	55	408	0
241-SX-103	8	483	0
241-SX-104	136	310	0
241-SX-105	63	312	0
241-SX-106	0	397	0
241-SX-107	79	16	0
241-SX-108	73	0	0
241-SX-109	58	183	0
241-SX-110	29	27	0
241-SX-111	76	39	0
241-SX-112	56	19	0
241-SX-113	19	0	0
241-SX-114	42	115	0
241-SX-115	4	0	0

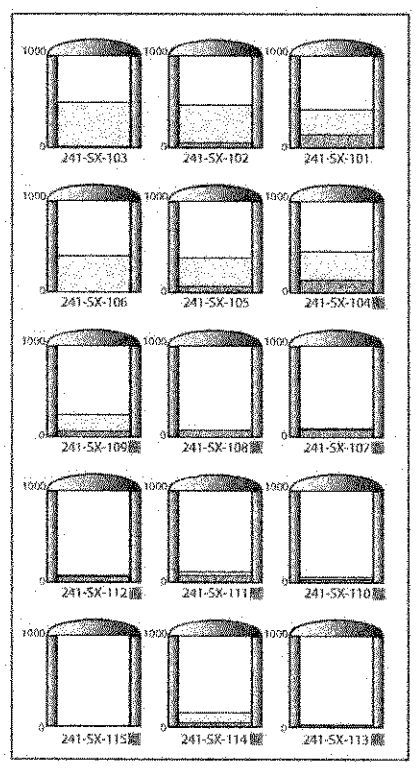

TY-Tank Farm- 1951-52
6 @ 758,000 GAL.Tank Capacity, Single-Shell

Tank	Sludge (Kgal)	Saltcake (Kgal)	Supernatant (Kgal)
241-TY-101	72	46	0
241-TY-102	0	69	0
241-TY-103	103	52	0
241-TY-104	43	0	1
241-TY-105	231	0	0
241-TY-106	16	0	0

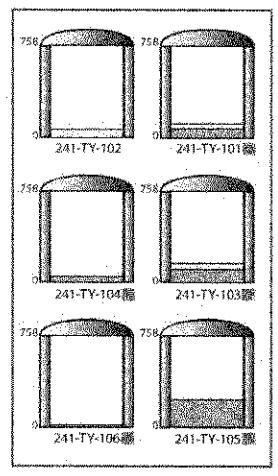

SY-Tank Farm- 1977
3 @ 1,160,000 GAL.Tank Capacity, Double-Shell

Tank	Sludge (Kgal)	Saltcake (Kgal)	Supernatant (Kgal)
241-SY-101	0	275	845
241-SY-102	145	0	505
241-SY-103	0	342	393

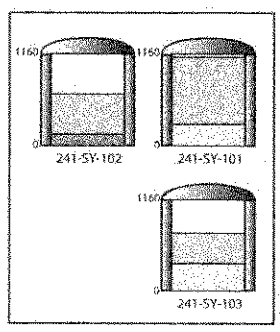

T-Tank Farm- 1943-44
12 @ 530,000 GAL.Tank Capacity, Single-Shell
4 @ 55,000 GAL.Tank Capacity, Single-Shell

Tank	Sludge (Kgal)	Saltcake (Kgal)	Supernatant (Kgal)
241-T-101	37	63	0
241-T-102	19	0	13
241-T-103	23	0	4
241-T-104	317	0	0
241-T-105	98	0	0
241-T-106	22	0	0
241-T-107	173	0	0
241-T-108	5	11	0
241-T-109	0	62	0
241-T-110	369	0	1
241-T-111	447	0	0
241-T-112	60	0	7
241-T-201	29	0	2
241-T-202	21	0	0
241-T-203	37	0	0
241-T-204	37	0	0

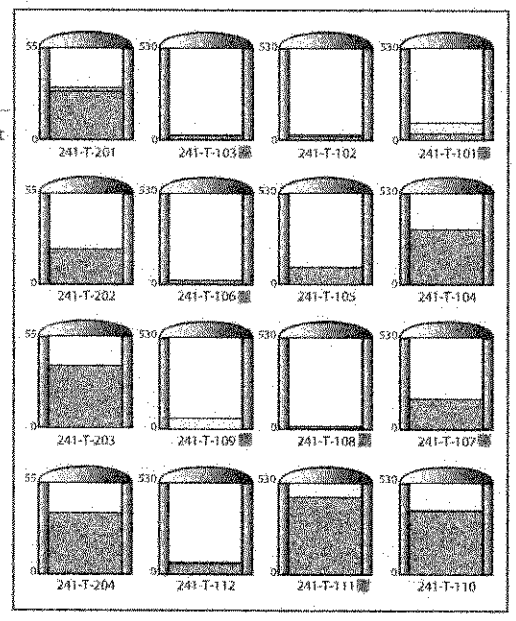

U-Tank Farm- 1946-49
12 @ 530,000 GAL.Tank Capacity, Single-Shell
4 @ 55,000 GAL.Tank Capacity, Single-Shell

Tank	Sludge (Kgal)	Saltcake (Kgal)	Supernatant (Kgal)
241-U-101	24	0	0
241-U-102	43	283	1
241-U-103	11	405	1
241-U-104	122	0	0
241-U-105	32	321	0
241-U-106	0	170	2
241-U-107	15	302	0
241-U-108	29	386	0
241-U-109	35	366	0
241-U-110	176	0	0
241-U-111	25	231	0
241-U-112	45	0	0
241-U-201	4	0	1
241-U-202	3	0	1
241-U-203	3	0	1
241-U-204	3	0	1

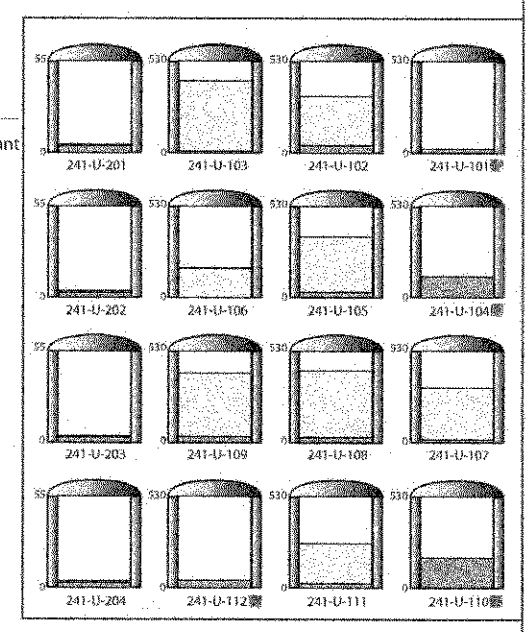

LEGEND: Sludge | Saltcake | Supernatant | Available Space | Assumed/Confirmed Leaker

Data Derived From Waste Tank Summary Report Dated 12/31/02

CH2MHILL

\\AP012\CH-ARDOCS\All by Staff Member\Nalbinbalkar\Tank Figures\200 West Tank Profile 123102.pdf

Figure E-5

Hanford
Tank Farm Facilities
200 East

Note:
All single-shell tanks were removed from service (not allowed to receive waste) on or before November 21, 1980

Active Lines Only

Concrete encased or pipe-in-pipe

Direct Buried Pipe

Cross-Site Transfer Lines (concrete encased or pipe-in-pipe)

Controlled, Clean and Stable

Single-Shell

Double-Shell

Sound Tanks

Intrusion Prevention Completed

All tanks 75 ft. dia. except 200 series tanks which are 20 ft. dia. @ 55,000 gal

DST = Double-Shell Tank
SST = Single-Shell Tank
DCRT = Double Contained Receiver Tank
ENRAF/FIC/MT = Liquid Level Monitoring Devices
TMACS = Tank Monitor and Control System

Inactive Cross -Site Transfer Lines

Replacement Cross - Site Transfer System (RCSTS) (From 6241-V)

Tank Number

Radiation Monitoring Laterals Under Tank (None Currently Used)

Radiation Monitoring Dry Well – Approx Location
● = Active
○ = Inactive
Dry Well Monitoring No Longer Being Routinely Done; By Special Request/Project Only.

Liquid-Level Gauges
▼ = FIC read manually
Y = Tape read manually

Exhauster (A-104/105/106 inoperative)

Interim Stabilized (Yellow Tank)

■=ENRAF Read Manually
⊘=Auto ENRAF on TMACS

Airlift Circulators (AN-107 and AW-102 are inoperative)

Temperature Reading:
● Automatic (TMACS)
○ Manual

Liquid Observation Well (LOW)

Screen – Jet Pump –

Assumed Leaked Date

Assumed Leaker

Status as of December 31, 2002
Updated Quarterly
Issued by River Protection Project

BY-Tank Farm
In Service 1950-51
12 @ 758,000 gal

B-Tank Farm
In Service 1945-47
12 @ 530,000 gal
4 @ 55,000 gal

BX-Tank Farm
In Service 1948-50
12 @ 530,000 gal

C-Tank Farm
In Service 1946-53
12 @ 530,000 gal
4 @ 55,000 gal

244-BX DCRT
ER-152
ER-151
ER-153
CR Vault
244-A DCRT
WESF
B-Plant
AX-155
Valve Pits
AR-151
204 AR
AR Vault

AN-Tank Farm
In Service 1981
7 @ 1,160,000 gal

AZ-Tank Farm
In Service 1975-76
(Aging Waste Tanks)
2 @ 1,000,000 gal

AY-Tank Farm
In Service 1971-76
(Aging Waste Tanks) 2 @ 1,000,000 gal

AX-Tank Farm
In Service 1965-66
4 @ 1,000,000 gal

AX-152
Valve Pits
Valve Pits
242-A Evaporator
AP Valve Pit
Grout Equip
Valve Pits
PUREX
A-151
Vault Field

A-Tank Farm
In Service 1956-57
6 @ 1,000,000 gal

AW-Tank Farm
In Service 1980
6 @ 1,160,000 gal

AP-Tank Farm
In Service 1986
8 @ 1,160,000 gal

Figure E-6
(Schematic)

29502008.2C
12/31/02

Hanford Tank Farm Facilities 200 West

Note:
All single-shell tanks were removed from service (not allowed to receive waste) on or before November 21, 1980

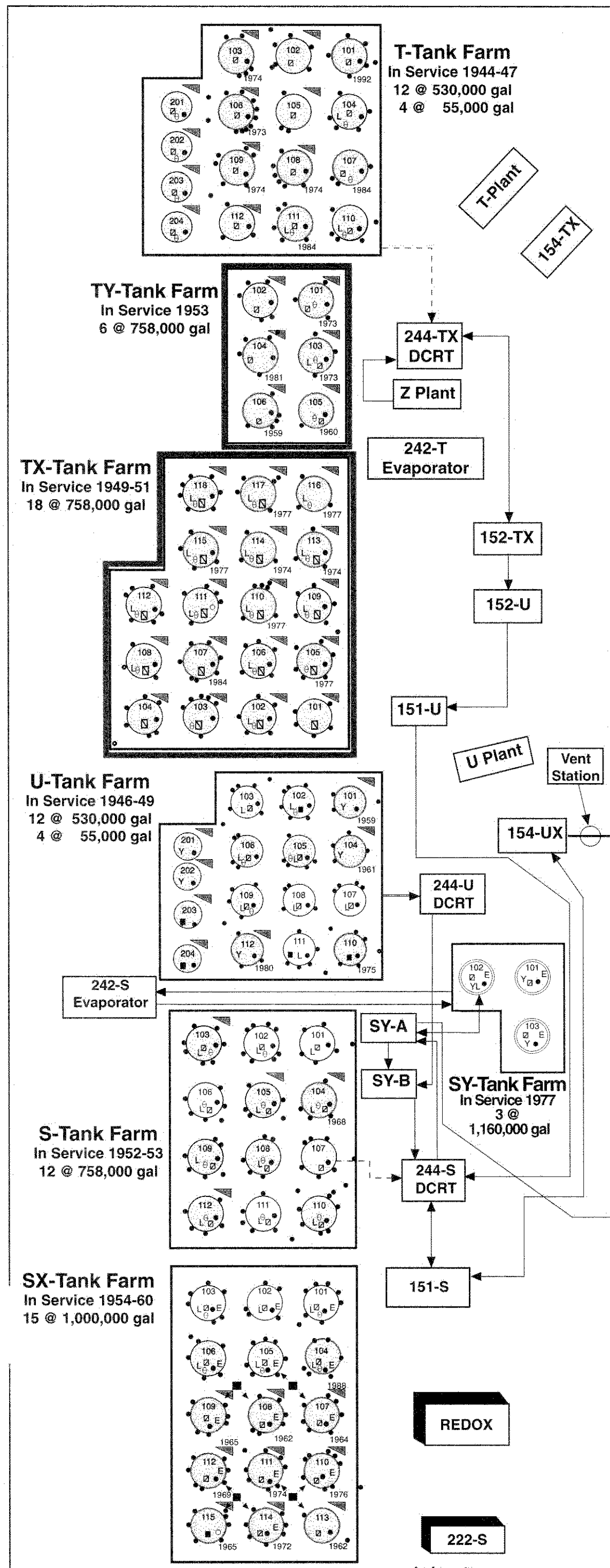

Figure E-7
(Schematic)

Active Lines Only

- Concrete encased or pipe-in-pipe
- Direct Buried Pipe
- Cross-Site Transfer Lines (concrete encased or pipe-in-pipe)

Controlled, Clean and Stable — Single-Shell — Double-Shell — Intrusion Prevention Completed

Sound Tanks

All tanks 75 ft. dia. except 200 series tanks which are 20 ft. dia. @ 55,000 gal

DST = Double-Shell Tank
SST = Single-Shell Tank
DCRT = Double Contained Receiver Tank
ENRAF/FIC/MT = Liquid Level Monitoring Devices
TMACS = Tank Monitor and Control System

High Heat Load Tanks = West Area - SX-107/108/109/110/111/112/114

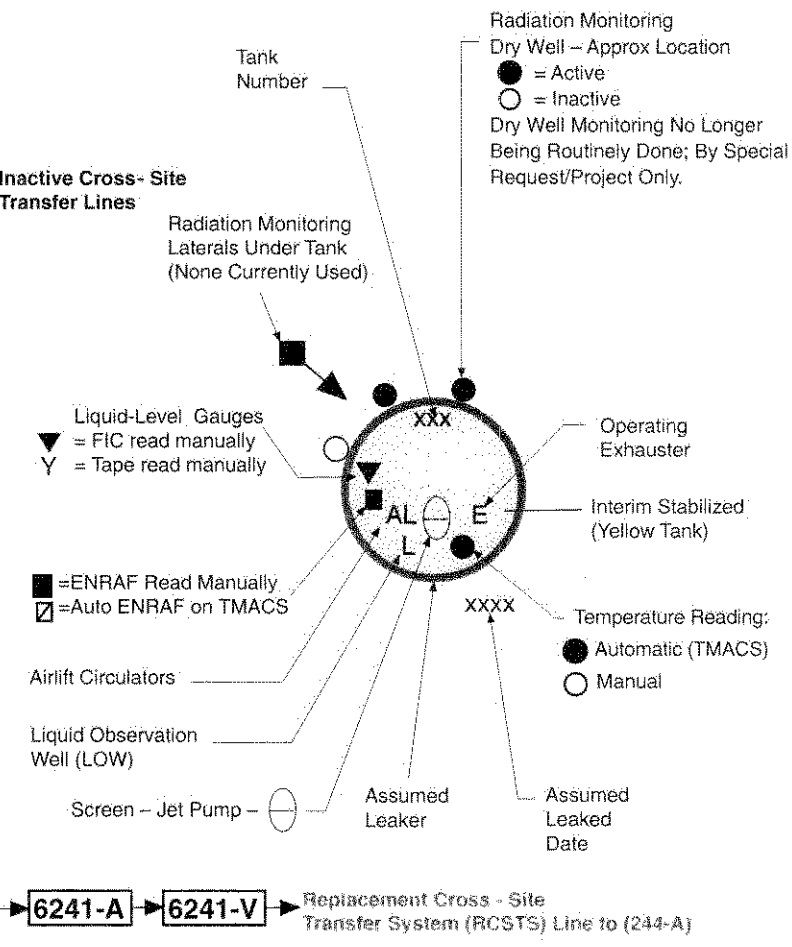

Status as of December 31, 2002
Updated Quarterly
Issued by River Protection Project

29502008.1C
12/31/02