FEB 28 2000
Sta 4 (5)

ENGINEERING DATA TRANSMITTAL

Page 1 of 1

1. EDT 618010

2. To: (Receiving Organization) DISTRIBUTION	3. From: (Originating Organization) F. M. Maiden	4. Related EDT No.: N/A
5. Proj./Prog./Dept./Div.: Interim Stabilization	6. Design Authority/Design Agent/Cog. Engr.: W. F. Zuroff/J. Lamphere	7. Purchase Order No.: N/A
8. Originator Remarks: Transmitted for release of the Operational Test Report (OTR) for U-103 with attached Operational Test Procedure (OTP), (Ladder Diagram printout for U-103 attached to OTP).		9. Equip./Component No.: N/A
		10. System/Bldg./Facility: Single Shell Tank Farm
		12. Major Assm. Dwg. No.: N/A
11. Receiver Remarks:	11A. Design Baseline Document? (●) Yes ( ) No	13. Permit/Permit Application No.: N/A
		14. Required Response Date: N/A

15. DATA TRANSMITTED

(A) Item No.	(B) Document/Drawing No.	(C) Sheet No.	(D) Rev. No.	(E) Title or Description of Data Transmitted	(F) Approval Designator	(G) Reason for Transmittal	(H) Originator Disposition	(I) Receiver Disposition
1	HNF-5820	ALL	0	Tank Farm U-103	N/A	1	1	1
				Operational Test Report				
				(OTR) with Attached				
				OTP & Ladder Diagram				

16. KEY

Approval Designator (F)	Reason for Transmittal (G)	Disposition (H) & (I)
E, S, Q, D OR N/A (See WHC-CM-3-5, Sec. 12.7)	1. Approval 2. Release 3. Information 4. Review 5. Post-Review 6. Dist. (Receipt Acknow. Required)	1. Approved 2. Approved w/comment 3. Disapproved w/comment 4. Reviewed no/comment 5. Reviewed w/comment 6. Receipt acknowledged

17. SIGNATURE/DISTRIBUTION (See Approval Designator for required signatures)

(G) Reason	(H) Disp.	(J) Name	(K) Signature	(L) Date	(M) MSIN	(G) Reason	(H) Disp.	(J) Name	(K) Signature	(L) Date	(M) MSIN
2	1	Design Authority W. F. Zuroff	[signature]	2/15/00	S7-24						
2	1	Design Agent F. M. Maiden	[signature]	2-11-00	S7-42						
2	1	Cog. Eng. J. E. Lamphere	[signature]	2/23/00	S7-24						
2	1	Cog. Mgr. M. R. Koch	[signature]		S7-24						
		QA									
		Safety									
		Env.									

18.	19.	20.	21. DOE APPROVAL (if required)
[signature] FM Maiden 2-11-00 Signature of EDT Originator / Date	[signature] MR Koch 2/23/00 Authorized Representative for Receiving Organization / Date	[signature] MR Koch 2/23/00 Design Authority/ Cognizant Manager / Date	Ctrl No. ( ) Approved ( ) Approved w/comments ( ) Disapproved w/comments

BD-7400-172-2 (10/97)

BD-7400-172-1

DISTRIBUTION SHEET

To	From	Page 1 of 1
Distribution	FM Maiden	Date 2/22/99
Project Title/Work Order		EDT No. 618010
HNF-5820 OPERATIONAL TEST REPORT (OTR) FOR U-103 PUMPING, INSTRUMENTATION AND CONTROL (PIC) SKID.		ECN No.

Name	MSIN	Text With All Attach.	Text Only	Attach./ Appendix Only	EDT/ECN Only
M KOCH	S7-24				X
WF ZUROFF	S7-24	X			
J LAMPHERE	S7-24				X
FM MAIDEN	S7-12				X
JD CRIDDLE Jr.	S7-12				X
MD RICKENBACH	H1-19				X

OPERATIONAL TEST REPORT (OTR) FOR U-103 PUMPING, INSTRUMENTATION AND CONTROL (PIC) SKID

Mike Koch
Prepared by CH2MHILL Hanford Group, Inc.
Richland, WA 99352
U.S. Department of Energy Contract DE-AC06-99RL14047

EDT/ECN: 618010 UC: 500
Cost Center: 47D00 Charge Code: L00850
B&R Code: EW3120071 Total Pages: 187

Key Words: U-103, OTR, OTP, LADDER DIAGRAM

Abstract: Attached is the completed Operation Test Procedure (OTP-200-004, Rev. A-16). OTP includes a print out of the Programmable Logic Controller (PLC) Ladder Diagram. Ladder Diagram was designed for installation in the PLC used to monitor and control pumping activity for Tank Farm 241-U-103. The completed OTP and OTR are referenced in the IS PIC Skid Configuration Drawing (H-2-829998).

TRADEMARK DISCLAIMER. Reference herein to any specific commercial product, process, or service by trade name, trademark, manufacturer, or otherwise, does not necessarily constitute or imply its endorsement, recommendation, or favoring by the United States Government or any agency thereof or its contractors or subcontractors.

Printed in the United States of America. To obtain copies of this document, contact: Document Control Services, P.O. Box 950, Mailstop H6-08, Richland WA 99352, Phone (509) 372-2420; Fax (509) 376-4989.

Release Approval Date 2/28/00

FEB 28 2000
DATE:
STA: 4
HANFORD RELEASE
ID: 5

Release Stamp

Approved For Public Release

OPERATIONAL TEST REPORT (OTR) FOR U-103 PUMPING, INSTRUMENTATION AND CONTROL (PIC) SKID

1. PURPOSE

The purpose of this test report is to document the operational test results and conclusions from the completed Operational Test Procedure (OTP-200-004 Rev. A-16) that was performed on PIC Skid U-103. IS PIC Skid Configuration Drawing H-2-829998 provides traceability for U-103 PIC skid hardware, software, and test documentation

2. SCOPE

The scope of this operational test included testing of system parameters and functions. The systems checked are listed in Section 2.1 of the OTP and include process instrumentation, System electrical, process air, water drip and more. The attachment to this test report is a copy of the actual test that was preformed. The test was conducted by Interim Stabilization and witnessed by the Cognizant Engineer.

3. TEST RESULTS

The test was completed and signed off on September 25, 1999. There were four test exceptions noted during the performance of the test. The first exception documented that section 5.3 through 5.10 were not performed during the OTP. Section 5.3 through 5.10 were done in their entirety during the ATP for PIC skid "K" (ATP # HNF-4277) and that all exceptions to the ATP specified in HNF-4277 were satisfactory resolved.

The second exception (OTP sections 5.11) documented that the leak detectors in SY02A pump pit and SYA/SYB valve pits failed the OTP test. The OTP requires the leak detectors to shutdown the U103 PIC skid. There is no data communication between S/SY and U farms. The resolution was to accept "As Is" (the leak detector function properly, i.e. detects leaks), however the condition is not sensed by U103 PIC skid. Until the condition is resolved and the SY/S Farm leak detector interlocks skid shut down of U103, an operator will be stationed in SY/S Farm to notify U farm operator of a leak condition in 02A, SA, and SB valve pits. This will allow the operator to take the appropriate action. Reference operating procedure TO-505-103.

The third exception (OTP section 4.2.12) documented that all ECNs to operate the pump were not signed off work complete. All work to operate (Simulate) pump was complete. The heat trace work was not complete. Resolution of exception will have ECNs signed off work complete HT completion of OTP.

The fourth exception (OTP section 5.1.11.1, 2, 3) documented that the weight factor (SPG) was reading 242, test designed to measure the parameter without dip tubes connected. Resolution involved disconnecting dip tubes, running test (parameters read properly) and then reconnection dip tubes.

4. CONCLUSION

The test demonstrated the proper operation of U-103 PIC Skid. All test exceptions were resolved and documented in the OTP exceptions records attached to the OTP.

5. ATTACHMENT

Attached to this report are Appendix A and Appendix B. Appendix A is a copy of the completed and signed OTP. Appendix B is a copy of the software printout.

Note: The OTP in the work package WS-99-00146 for U-103 was missing the attached software printout. Appendix B is a copy of the U-103 software printout released in HNF-4770 at the completion of the OTP.

OPERATIONAL TEST PROCEDURE FOR 6000 SERIES PUMPING AND INSTRUMENTATION CONTROL SKIDS

Last Full Revision: A-0
Release Date: 5/29/97
USQ Screening Number:
Approval Designator: SQ

Current Modification: A-16
USQ Screening Number: TF-98-1201, Rev 1
Approval Designator: NA
PCA Incorporated: WTF-99-0384

POSITION/ORG	DELEGATE	DATE
NCO/IS	D. O. Dudley	8/23/99
STAB. MGR	D. J. Saueressig	8/23/99
SR ENG/IS	B.R. Johns	8/23/99
Acceptance Review	S. E. Bevans	8/23/99
Approval Authority	D. J. Saueressig	8/23/99

Justification: Engineering Request based on Operations Feedback

Summary of Changes:
Add missed valves, and breakers,
Change terminology and ranges to match current field conditions

See Change Summary and Signature Sheet

TABLE OF CONTENTS PAGE

1.0 PURPOSE 3

2.0 INFORMATION 3
- 2.1 SCOPE 3
- 2.2 TERMS AND DEFINITIONS 4
- 2.3 RESPONSIBILITIES 4
- 2.4 REFERENCES 5
- 2.5 SAFETY 6
- 2.6 RADIATION AND CONTAMINATION CONTROL 6
- 2.7 QUALITY ASSURANCE 7
- 2.8 GENERAL INFORMATION 7
- 2.9 LIMITS AND PRECAUTIONS 8

3.0 RECORDS 9

4.0 PREREQUISITES 9

5.0 PROCEDURE 15
- 5.1 PUMPING AND INSTRUMENTATION CONTROL SKID ELECTRICAL AND PROCESS AIR POWER-UP 15
- 5.2 PUMPING AND INSTRUMENTATION CONTROL SKID WATER DRIP SYSTEM 22
- 5.3 VERIFY DATA TABLE ACCESS MODULE AND OPERATOR CONTROL STATION ANALOG INPUT SIGNALS 24
- 5.4 VERIFY DATA TABLE ACCESS MODULE AND OPERATOR CONTROL STATION DISCRETE SIGNAL INPUTS 36
- 5.5 VERIFY DATA TABLE ACCESS MODULE AND OPERATOR CONTROL STATION MONITOR/ALARM FUNCTIONS 43
- 5.6 REMOTE SETPOINT CHANGE USING THE OPERATOR CONTROL STATION 46
- 5.7 DATA TABLE ACCESS MODULE AND OPERATOR CONTROL STATION DIAPHRAGM OPERATED VALVE AUTOMATIC/MANUAL OPERATION 47
- 5.8 JET PUMP FLOWMETER OPERATION 56
- 5.9 JET PUMP VALVING INTERLOCK FOR THE JET PUMP 63
- 5.10 OPERATOR CONTROL STATION JET PUMP SHUTDOWN TEST 66
- 5.11 LEAK DETECTION INTERLOCK CHECK 67
- 5.12 SHUTDOWN CIRCUITRY CHECK 76
- 5.13 SOFTWARE DOCUMENTATION 88

OPERATIONAL TEST PROCEDURE EXCEPTION LOG 89

OPERATIONAL TEST PROCEDURE EXCEPTION RECORD 90

OPERATIONAL TEST PROCEDURE ACCEPTANCE RECORD 91

PROCEDURE PERFORMER SIGNATURE SHEET 92

PROCEDURE HISTORY SIGNATURE SHEET 93

1.0 PURPOSE

This Operational Test Procedure (OTP) will test and verify that the equipment required for Saltwell pumping of specified tank meets the specified Functional Requirements, Safety Requirements, Radiological Requirements, Operations Requirements, and provides a record of the functional test results. The systems/functions that will be tested are listed in the Scope section that follows.

2.0 INFORMATION

2.1 SCOPE

The following systems will be tested by this Operational Test Procedure:

- Process Instrumentation and Control System Electrical and Process Air System
- Process Instrumentation and Control System Water Drip System
- Weight Factor and Specific Gravity System
- Diaphragm Operated Valve Automatic and Manual Operation
- Jet pump Flowmeter Operation
- Water Tank Level Transmitter
- Jet pump Heat Trace
- Leak Detection Interlock
- Jet Pump Valving Interlock
- Safe Shutdown Circuit
- Flammable Gas Monitor Interface
- Exhauster Interface
- Receiver Tank Interlocks

2.2 TERMS AND DEFINITIONS

2.2.1 LCV - Level Control Valve

2.2.2 GPM - Gallons Per Minute

2.2.3 IA - Instrument Air

2.2.4 LDE - Leak Detection Element

2.2.5 OCS - Operator Control Station

2.2.6 PRV - Pressure Relief Valve

2.2.7 SGI - Specific Gravity Indicator

2.2.8 WFIE - Weight Factor Instrument Enclosure

2.3 RESPONSIBILITIES

2.3.1 Quality Control is responsible for:

- Witnessing and signing steps as identified in Operational Test Procedure.
- Verifying that the procedure sections were performed correctly.

2.3.2 Test Director is responsible for:

- Providing the equipment found in step 4.1 of this procedure.
- Recording equipment status and data per this procedure.
- Conducting pre-job planning meeting as necessary.
- Conducting pre-job system walkdown.
- Scheduling/rescheduling of the test as required.
- Recording data, exceptions and other notes as required.

2.3.3 Engineering personnel are responsible for:

- Providing technical support during testing.
- Providing programming support during testing.
- Forcing data in Programmable Logic Controller program during testing.

2.3 RESPONSIBILITIES (Cont.)

2.3.4 Maintenance personnel are responsible for:

- Providing assistance during testing.

2.3.5 Operations personnel are responsible for:

- Performing valving manipulations on Pumping and Instrumentation Control Skid Systems and Test equipment.
- Starting, stopping, and controlling equipment related to Saltwell operations.
- Controlling and monitoring parameters from the Data Table Access Module, or Operator Control Station.

2.3.6 Health Physics personnel are responsible for:

- Ensuring RWP requirements are met during field portion of testing.
- Surveying tools and equipment out of the Farm.
- Providing guidance to craft personnel in maintaining good health physics practices.

2.4 REFERENCES

2.4.1 The following documents were used to write or are referenced in this procedure:

- HNF-PRO-079, "PRE-JOB SAFETY PLANNING"
- WHC-IP-1026 APPX L, "ENGINEERING PRACTICES GUIDELINES"
- H-14-100538 Rev 0, SALTWELL JET PUMP
- H-14-100542 Rev 0, SALTWELL JUMPER ASSEMBLY
- H-2-85621 Rev 0, INSTRUMENT AIR AND WATER SYSTEM DETAILS
- H-2-85625 Rev 0, INSTRUMENTATION WEIGHT FACTOR ENCLOSURE ARRANGEMENT
- H-2-85626 Rev 0, PUMPING AND INSTRUMENTATION CONTROL SKID
- H-14-023960 Rev 0, SALTWELL CONTROL EQUIPMENT (SALW) O&M SYSTEM P&ID
- JOHNSON YOKOGAWA ADMAG AM SERIES VENDOR INFORMATION
- FOXBORO 823 DP SERIES ELECTRONIC DIFFERENTIAL PRESSURE CELL VENDOR INFORMATION
- TO-060-085, OPERATE THE PORTABLE 500 CFM EXHAUSTER FOR TANK 241-A-101 SALTWELL PUMPING
- Controlotron System 990 Uniflow Universal Clamp-On NEMA Flowmeter Vendor Field Manual

2.5 SAFETY

Warning - 120 VAC energized circuits and leads will be encountered during test if access to Programmable Logic Controller input/output terminals or serial communication port is required at any time. Observe appropriate electrical precautions as directed by HNF-PRO-088, Electrical Work Safety.

Warning - Circuit boards are energized. Terminal strips in the Instrument Enclosure have 120 VAC exposed leads. Use appropriate electrical precautions as directed by HNF-PRO-088, Electrical Work Safety.

Warning - Energized circuits and leads are contained inside the cabinet. Observe appropriate electrical precautions. Comply with HNF-PRO-088, Electrical Work Safety.

2.5.1 Work will be performed in this Operational Test Procedure on energized circuits.

2.5.2 The following administrative procedures control work performed in this procedure:

- Building Emergency Plan, WHC-IP-0263-TF
- Industrial Hygiene Manual, WHC-CM-4-40
- HNF-PRO-074, Safety Responsibilities
- Tank Farm Health and Safety Plan (HASP), WHC-SD-WM-HSP-002

2.6 RADIATION AND CONTAMINATION CONTROL

2.6.1 Health Physics Technician assistance is required in accordance with Radiation Work Permit.

2.6.2 The following administrative procedures control work performed in this procedure:

- Hanford Site Radiological Control Manual (HSRCM)

2.6.3 The test shall be STOPPED and the Shift Manager immediately notified, if radiation levels significantly increase as determined by a radiation monitor.

2.6.4 Work in Radiological Areas will be performed using a Radiation Work Permit, following review by Radiological Control per the ALARA program (HNF-IP-0842, Vol 7, Section 1.1).

2.7 QUALITY ASSURANCE

Ensure that the test(s) are performed per the procedure. The Quality Control Inspector shall sign and date each procedure section verifying the data obtained, and verifying that the procedure section has been performed correctly.

2.8 GENERAL INFORMATION

2.8.1 After completion of Sections 5.1 and 5.2, subsequent sections may be performed out of order, as directed by the Test Director.

2.8.2 All entries recorded in this procedure shall be made in black ink.

2.8.3 Editorial changes required to this Operational Test Procedure may be made per the Procedure Change Authorization method by the Test Director and Cognizant Engineer as long as they do not impact personnel safety, or operational facility safety function or performance; and will not compromise or influence the test data.

2.8.4 Any non-conformance of the instrumentation or unexpected results during testing shall be logged in the Operational Test Procedure EXCEPTION LOG and thoroughly documented on a Operational Test Procedure EXCEPTION RECORD.

2.8.5 Do not perform any part of this procedure on faulty equipment. If faulty equipment is discovered, STOP the execution of that section of this procedure and resolve the problem and/or continue with a different section.

2.8.6 If the performance of this procedure is suspended for any reason, ensure the equipment is left in a safe and de-energized state as necessary.

2.8.7 This procedure DOES NOT contain any separate data/verification sheets. Verification of procedural steps and validity of the data is incorporated into the specific section.

2.8.8 If performance of this procedure is suspended for any reason and if necessary, ensure the requirements of the Lock and Tag system are met before leaving the test site.

2.8.9 A Job Hazard Analysis form will be used in conjunction with the pre-job safety meeting form when any unusual hazards are identified. The PRE-JOB MEETING FORM will be used to document all attendees.

2.8 GENERAL INFORMATION (Cont.)

2.8.10 Tests interrupted due to work breaks, personnel support, faulty equipment or other reasons may require performing equipment manipulations such as valving, power down or alarm acknowledgement in order to leave the equipment in a safe condition. The Test Director may deviate from test steps in order to assure safe equipment configuration. Configuration shall be noted so the equipment may be restored at the resumption of testing. Shift Management shall be kept apprised of test status and equipment condition.

2.8.11 Acknowledge applicable alarms per Test Director.

2.8.12 Sections 5.1 through 5.9 of this procedure are generally performed in the shop prior to equipment placement in the field. Daily release requirements through the Shift office must be met for field portions of testing.

2.8.13 Section 5.12 is only performed for Facility Group 2 tank 241-A-101 installation only. All other Facility Group 2 and 3 tanks undergoing saltwell operational testing will omit this section.

2.8.14 In some instances, such as Emergency Pumping Skid testing, the Operator Control Station will be untested or not required. Test sections 5.6 and 5.10 will not be performed. Blanks representing CCS data shall be completed with an "NA" in other test sections.

2.9 LIMITS AND PRECAUTIONS

DO NOT perform any tank intrusive work without the express authorization of the Shift Manager.

3.0 RECORDS

3.1 The completed Working Copy of this procedure, including all exception logs and exception records generated by this procedure, will be kept as permanent records.

3.2 This procedure is designed to be re-usable for many skid installations. Each skid will replace the asterisk (*) in device names used throughout this procedure.

3.3 **RECORD** the following information for this procedure:

Tank Number: 11103

Skid Designator: SALW 6001 K

3.4 **RECORD** the following information or "NA" if an Operator Control Station is not tested.

Operator Control Station Location (building number): OCS Computer checked Per HNF-4277.

4.0 PREREQUISITES

NOTE - Equipment shall be available before the step associated with that piece of equipment.

4.1 The following supplies shall be available at the work place:

- Volt/ohm meter (VOM): Portable, 0-600 volts ac, ± 2% accuracy.

  Calibration No. N/A Expiration Date N/A QC N/A

- Transmation current (milliamp) simulator or equivalent

  Calibration No. N/A Expiration Date N/A QC N/A

- Manometer - minimum range 0-500" water gauge. Must have a read out of variable test pressure.

  Calibration No. N/A Expiration Date N/A QC N/A

- Manometer - minimum range 0-50" water gauge. Must have a read out of variable test pressure.

  Calibration No. N/A Expiration Date N/A QC N/A

4.0 PREREQUISITES (Cont.)

- Jumper Test Assembly PI-2 (suction) pressure gauge (Required for shop run-ins only - NA lines for field only OTPs)

  Calibration No. N/A Expiration Date N/A QC N/A

- Jumper Test Assembly PI-1 (discharge) pressure gauge (Required for shop run-ins only - NA lines for field only OTPs)

  Calibration No. N/A Expiration Date N/A QC N/A

- Flowmeter Calibrator (Required for Brooks flowmeters only - NA lines for skids with Yokogawa flowmeters)

  Calibration No. N/A Expiration Date N/A QC N/A

- Saltwell Jet pump Jumper (see H-14-100725 Sheet 18)
- Rotameter or Flowmeter N/A
- Jumper Test Assembly N/A
- 2 way radios for communication between Tank Farm and local control room
- 480V 3 Phase Power Source
- Controlotron 995T Control and Display Unit N/A

NOTE - Test sections may commence prior to assembly of all test equipment. Test Director is responsible to assure all equipment necessary for a given section is available.

SEE Test EXCEPTION #1

4.2 The following conditions must be met before this test may commence:

4.2.1 The Jet Pump Jumper and Jumper assembly have been placed on the pump recirculation apparatus. N/A ☐

4.2.2 The Pumping and Instrumentation Control Skid water tank and run-in tank have been adequately filled for testing. N/A ☐

SKID WATER TANK HAS been adequately filled.

4.2.3 The Jet Pump Jumper AND Jumper Assembly have been electrically AND pneumatically connected to the Pumping and Instrumentation Control Skid. ☑

4.0 PREREQUISITES (Cont.)

4.2.4 A pre-job safety meeting has been held before performing this procedure in accordance with WHC-IP-0842, Vol V Section 4.1, PRE-JOB SAFETY MEETING FORM. ☑

4.2.5 The Pumping and Instrumentation Control Skid has been grounded in preparation for shop testing. ☑

Testing in field.

TEST Exception 1

4.2.6 Test gauges **AND** rotameter have been installed in correct locations as indicated by the Test Director. Test gages and rotor meter not needed for section tested. N/A ☐

4.2.7 Ensure the following Pumping and Instrumentation Control Skid Valves are OPEN prior to starting this OTP.

✓ SALW-V-6035* (equalizing) ✓ SALW-V-6036* (equaling) ☑

4.2.8 **ENSURE** the following Pumping and Instrumentation Control Skid valves are CLOSED prior to starting this Operational Test Procedure:

✓ SALW-V-6034*	✓ SALW-V-6026*	✓ SALW-V-6001*
✓ SALW-V-6004*	✓ SALW-V-6002*	✓ SALW-V-6003*
✓ SALW-V-6021*	✓ SALW-V-6020*	✓ SALW-V-6036* (hi)
✓ SALW-V-6036* (low)	✓ SALW-V-6035* (hi)	✓ SALW-V-6025*
✓ SALW-V-6035* (low)	✓ SALW-V-6019*	✓ SALW-V-6029*
✓ SALW-V-6027*	✓ SALW-V-6028*	✓ SALW-V-6032*
✓ SALW-V-6031*	✓ SALW-V-6030*	✓ SALW-V-6016*
✓ SALW-V-6018*	✓ SALW-V-6017*	✓ SALW-V-6013*
✓ SALW-V-6015*	✓ SALW-V-6014*	✓ SALW-V-6012*
✓ SALW-V-6008*	✓ SALW-V-6011*	✓ SALW-V-6005*
✓ SALW-V-6006*	✓ SALW-V-6007*	✓ SALW-V-6037*
✓ SALW-V-6044*	✓ SALW-V-6046*	✓ SALW-V-6047*
~~SALW-V-6038*~~	✓ SALW-V-6048*	✓ SALW-V-6049*
✓ SALW-V-6043*		

☑

4.0 PREREQUISITES (Cont.)

4.2.9 ENSURE the following Pumping and Instrumentation Control Skid circuit disconnects and breakers are OPEN (OFF) prior to starting this Operational Test Procedure. Refer to H-2-85327, Sheet 7 for circuit breakers.

✓ SALW-DS-6002* ✓ SALW-DS-6003* ✓ SALW-DS-6004*
✓ SALW-DS-6005*

NOTE - The following breakers are located in SALW-DP-6001*.

✓ Breaker "MAIN"	✓ Breaker 2
✓ Breaker 1	✓ Breaker 4
✓ Breaker 3	✓ Breaker 6
✓ Breaker 5	✓ Breaker 8
✓ Breaker 7	✓ Breaker 10
✓ Breaker 9	✓ Breaker 12
✓ Breaker 11	✓ Breaker 14
✓ Breaker 13	

☑

4.2.10 A printed copy of Ladder Logic and Alarm Table for the Pump Instrumentation and Control Skid is available at the work site. Copies may be kept outside of Radiological areas until necessary. ☑

4.2.11 All personnel initialling or signing this procedure must also enter signature/initials on the PROCEDURE PERFORMER SIGNATURE SHEET. ☑

Exception #3 4.2.12 Verify that all applicable ECNs are signed off as work complete. ☑

All necessary ECNs to operate pump (simulated) have been completed - at completion of OTP All applicable ECNs will be signed off as work complete

4.0 PREREQUISITES (Cont.)

NOTE - Verification of instrument calibration must be performed before the step associated with that instrument.

4.3 Verify the current calibration. Record the calibration date and calibration due date on the table below.

INSTRUMENT	CALIBR/FUNCT CHECK DATE	NEXT DUE DATE
	KW 9/14/99 ~~8-5-99~~	~~8-5-00~~
SALW-PS-6004*	8-5-99	8-5-00
SALW-WFT-6002*	8-10-99	8-00
SALW-LT-6003*	8-9-99	8-00
SALW-SGT-6001*	8-10-99	8-00
SALW-CONV-6001* SALW-LY-6001*	8-10-99	8.00
SALW-FQIT-6001*	8-13-99	8-00
SALW-PI-6006*	8-10-99	8.00
SALW-PI-6001*	8-10-99	8-00
SALW-PI-6005*	8-10-99	8-00
SALW-FI-6001*	8-5-99	8-500
SALW-PI-6002*	8-10-99	8-00
SALW-PI-6003*	8-10-99	8-00
SALW-PI-6004*	8-10-99	8-00
SALW-PI-6007*	8-10-99	8-00
SALW-PI-6008*	8-10-99	8.00

4.0 PREREQUISITES (Cont.)

4.4 Test Director VERIFY that section 4.0 has been completed by SIGNING below.

Test Director Signature _____ Date 9-24-98

4.5 Quality Control Inspector VERIFY that section 4.0 has been completed by SIGNING below.

Quality Control Inspector Signature _____ Date 9/24/99

* SEE EXCEPTION #1, #3 KW 9/24/99

5.0 PROCEDURE

NOTE - This Operational Test Procedure will be used for more than one skid. An asterisk (*) is used to identify the skid LETTER.

NOTE - All personnel performing this procedure, who will be initialing and signing the procedure, shall enter their printed name, signature and initials on the PROCEDURE PERFORMER SIGNATURE SHEET.

5.1 PUMPING AND INSTRUMENTATION CONTROL SKID ELECTRICAL AND PROCESS AIR POWER-UP

5.1.1 ENERGIZE the Pumping and Instrumentation Control Skid by CLOSING the following DISCONNECT SWITCHES in the order found below:

DISCONNECT SWITCH	ENERGIZED (✓)
SALW-DS-6002*	✓
SALW-DS-6003*	✓
SALW-DS-6004*	✓
SALW-DS-6005*	✓

5.1 PUMPING AND INSTRUMENTATION CONTROL SKID ELECTRICAL AND PROCESS AIR POWER-UP (CONT.)

NOTE - The following circuit breakers are located in SALW-DP-6001* "SALW SKID DIST PNL".

5.1.2 ENERGIZE the Pumping and Instrumentation Control Skid by CLOSING the following Circuit Breakers in the order found below:

DISCONNECT SWITCH	ENERGIZED (✓)
"MAIN"	✓
7. (WEIGHT FACTOR INSTRUMENT ENCLOSURE)	✓
3. (LEAK DETECTION/HEAT TRACE)	✓
8. (WATER TANK HEATER)	✓
5. (INSTRUMENT ENCLOSURE [PLC])	✓
4. (AIR COMPRESSOR CABINET HEATER & [1] RECEPTACLE)	✓
9. (RECEPTACLE)	✓
11. (FGM PUMP AND HEATER)(PIT)	✓
6. (INTRINSICALLY SAFE PANEL)	✓
10. (HEAT TRACE FOR DIPTUBES AND IA LINE, HEAT TRACE SAMPLE/RETURN)	✓
1. (FGM PUMP AND HEATER)(DOME)	✓
2. (HEAT TRACE SAMPLE/RETURN)(DOME)	✓
12. (INSTR CABINET AC AND HEATER RCPT.)	✓
13. (FGM HEATER TRACE) (DOME)	✓
14. (FGM HEATER TRACE) (PIT)	✓

5.1 PUMPING AND INSTRUMENTATION CONTROL SKID ELECTRICAL AND PROCESS AIR POWER-UP (CONT.)

5.1.3 ACKNOWLEDGE any initial skid or FGM alarms. ☑

5.1.4 OPEN valve SALW-V-6034* (located in the Air COMP Cabinet). ☑

5.1.5 START air compressor SALW-CMP-6001* "SALW SKID IA COMP" by POSITIONING switch on the SALW-DS-6004* to the HAND or ON position. ☑

5.1.6 VERIFY that Air Compressor starts and builds up pressure AND shuts off at 86 to 94 psig, as indicated by pressure gauge SALW-PI-6006* (AIR DRYER INLET PRESS).

Test Director Signature _____ Date 9-24-99

5.1.7 VALVE in air to the Pumping and Instrumentation Control Skid Water Tank by SLOWLY PERFORMING the following (Refer to H-14-023960 Sheet 1):

5.1.7.1 SLOWLY OPEN valve SALW-V-6025* (located in the air compressor cabinet). ☑

5.1.7.2 SLOWLY OPEN valve SALW-V-6027* (located near the water tank). ☑

5.1.7.3 SLOWLY OPEN valve SALW-V-6028* (located near the water tank). ☑

5.1.7.4 ADJUST Pressure Regulator Valve SALW-PCV-6006* to 30 psi (± 3 psig) as indicated by pressure gauge SALW-PI-6008* (WTR TK PRESS). ☑

5.1 PUMPING AND INSTRUMENTATION CONTROL SKID ELECTRICAL AND PROCESS AIR POWER-UP (CONT.)

5.1.8 **VALVE IN** air to SALW-PNL-6002* (WFIE Cabinet) by **PERFORMING** the following (Refer to H-14-023960 Sheet 1):

5.1.8.1 **SLOWLY OPEN** valve SALW-V-6026* (located in the Air Compressor Cabinet). ☑

5.1.8.2 **SLOWLY OPEN** valve SALW-V-6001*, located in the bottom of SALW-PNL-6002* (WFIE Cabinet). ☑

5.1.8.3 **ADJUST** pressure control valve SALW-PCV-6001* in SALW-PNL-6002* (WFIE Cabinet) to 20 psi (± 2.5 psi) as indicated by the pressure gauge located on the face of the valve. ☑

5.1.8.4 **SLOWLY OPEN** valve SALW-V-6004*, located in the middle of SALW-PNL-6002* (WFIE Cabinet). ☑

5.1.8.5 **SLOWLY OPEN** valve SALW-V-6003*, located in the middle of SALW-PNL-6002* (WFIE Cabinet). ☑

5.1.8.6 **SLOWLY OPEN** valve SALW-V-6005*, located in the bottom left of SALW-PNL-6002* (WFIE Cabinet). ☑

5.1.8.7 **SLOWLY OPEN** valve SALW-V-6006*, located in the bottom left of SALW-PNL-6002* (WFIE Cabinet). ☑

5.1.8.8 **SLOWLY OPEN** valve SALW-V-6007*, located in the bottom left of SALW-PNL-6002* (WFIE Cabinet). ☑

5.1 PUMPING AND INSTRUMENTATION CONTROL SKID ELECTRICAL AND PROCESS AIR POWER-UP (CONT.)

5.1.8.9 **SLOWLY OPEN** valve SALW-V-6002*, located in the bottom left of SALW-PNL-6002* (WFIE Cabinet). ☑

5.1.8.10 **SLOWLY OPEN** valve SALW-V-6020*, located in the middle left of SALW-PNL-6002* (WFIE Cabinet). ☑

5.1.8.11 **SLOWLY OPEN** valve SALW-V-6021*, located in the middle left of SALW-PNL-6002* (WFIE Cabinet). ☑

5.1.8.12 **SLOWLY OPEN** valve SALW-V-6019*, located in the middle left of SALW-PNL-6002* (WFIE Cabinet). ☑

5.1.9 **ADJUST** the air flow through the diptubes by **PERFORMING** the following:

5.1.9.1 **ADJUST** flow to dip tubes to 1.5 CFH (± 0.5 CFH) as indicated by SALW-FIV-6002*.

Test Director Signature _____ Date 9-24-99

5.1.9.2 **ADJUST** flow to dip tubes to 1.5 CFH (± 0.5 CFH) as indicated by SALW-FIV-6003*.

Test Director Signature _____ Date 9-24-99

5.1.9.3 **ADJUST** flow to dip tubes to 1.5 CFH (± 0.5 CFH) as indicated by SALW-FIV-6004*.

Test Director Signature _____ Date 9-24-99

5.1.9.4 **ENSURE** flows obtained in steps are all within 0.25 cfh of each other. ☑

5.1 PUMPING AND INSTRUMENTATION CONTROL SKID ELECTRICAL AND PROCESS AIR POWER UP (CONT.)

5.1.10 VALVE IN SALW-WFT-6002* AND SALW-SGT-6001* by PERFORMING the following:

☑

5.1.10.1 ENSURE the LOW side AND HIGH side isolation valves, located on SALW-V-6036* in cabinet SALW-PNL-6002* (WFIE Cabinet) are OPEN.

☑

5.1.10.2 ENSURE SALW-WFT-6002* EQUALIZING valve on valve manifold SALW-V-6036* in cabinet SALW-PNL-6002* (WFIE Cabinet) is CLOSED.

☑

5.1.10.3 ENSURE the LOW side AND the HIGH side isolation valves, located on SALW-V-6035* in cabinet SALW-PNL-6002* (WFIE Cabinet) are OPEN.

☑

5.1.10.4 ENSURE SALW-SGT-6001* equalizing valve on valve manifold SALW-V-6035* in cabinet SALW-PNL-6002* (WFIE Cabinet) is CLOSED.

☑

5.1 PUMPING AND INSTRUMENTATION CONTROL SKID ELECTRICAL AND PROCESS AIR POWER UP (CONT.)

5.1.11 CONFIRM that a signal is present between SALW-PNL-6002* (WFIE Cabinet) Instruments and the Programmable Logic Controller by PERFORMING the following:

Test exception 4 Discrepant

5.1.11.1 VERIFY Weight Factor is approximately 0.0" (±0.5") Water Gauge as indicated by Data Table Access Module. If DTAM displays "<<<<" indicating less than zero, verify continuity between the transmitter and the Programmable Logic Controller and proceed with the test.

Test Director Signature _____ Date 9-24-99

5.1.11.2 VERIFY Specific Gravity is approximately 0.0" (±0.5") Water Gauge as indicated by Data Table Access Module. If DTAM displays "<<<<" indicating less than zero, verify continuity between the transmitter and the Programmable Logic Controller and proceed with the test.

Test Director Signature _____ Date 9-24-99

5.1.11.3 VERIFY Flow rate is approximately 0.0 (±0.5 gpm) Gallons Per Minute as indicated by Data Table Access Module. If DTAM displays "<<<<" indicating less than zero, verify continuity between the transmitter and the Programmable Logic Controller and proceed with the test.

Test Director Signature _____ Date 9-24-99

5.1.12 Test Director VERIFY that section 5.1 is complete by SIGNING below.

Test Director Signature _____ Date 9-24-99

5.1.13 Quality Control Inspector VERIFY that section 5.1 is complete by signing below.

* Quality Control Inspector Signature _____ Date 9/24/99

* SEE EXCEPTION # 4 KW 9/24/99

5.2 PUMPING AND INSTRUMENTATION CONTROL SKID WATER DRIP SYSTEM

NOTE - If Diptubes are not installed in test area, process air and drip water will be expelled from the side of SALW-PNL-6002* (WFIE Cabinet).

5.2.1 If necessary, **ATTACH** temporary portable hose from diptube outlet to high and medium diptubes from the bottom of the weight factor enclosure, (from valves SALW-V-6005* and SALW-V-6007*).

- **ROUTE** the flexible hose to a suitable drain **AND SECURE**. N/A

5.2.2 **ACTUATE** the Dip Tube Drip system by **SLOWLY OPENING** the following valves:

VALVES	OPEN (✓)
SALW-V-6018* located in the bottom right of SALW-PNL-6002* (WFIE Cabinet)	✓
SALW-V-6016* located in the middle of SALW-PNL-6002* (WFIE Cabinet)	✓
SALW-V-6013* located in the middle of SALW-PNL-6002* (WFIE Cabinet)	✓
SALW-V-6008* located in the middle of SALW-PNL-6002* (WFIE Cabinet)	✓

CAUTION

Relief valve (SALW-PRV-6001*) will actuate and relieve pressure at 25 psig.

5.2.3 **CAREFULLY ADJUST** Pressure Regulator SALW-PCV-6005*, located in the bottom of SALW-PNL-6002* (WFIE Cabinet) to 20 psig (± 2 psig) as indicated by SALW-PI-6001* in the middle of SALW-PNL-6002* (WFIE Cabinet). ✓

5.2.4 **ADJUST** valve SALW-V-6014* to allow APPROXIMATELY 2 drops/second as indicated by sight glass SALW-FG-6001* (±1 drop/second). ✓

5.2.5 **ADJUST** valve SALW-V-6015* to allow APPROXIMATELY 2 drops/second as indicated by sight glass SALW-FG-6002* (±1 drop/second). ✓

5.2 PUMPING AND INSTRUMENTATION CONTROL SKID WATER DRIP SYSTEM (Cont.)

NOTE - Instrument air to the Diaphragm Operated Valve will remain valved in for testing in subsequent steps.

5.2.6 VALVE OUT the dip tube drip water by SLOWLY CLOSING the following:

VALVE	CLOSED (✓)
SALW-V-6015* located in the middle of SALW-PNL-6002* (WFIE Cabinet)	✓
SALW-V-6014* located in the middle of SALW-PNL-6002* (WFIE Cabinet)	✓
SALW-V-6008* located in the middle of SALW-PNL-6002* (WFIE Cabinet)	✓
SALW-V-6013* located in the middle of SALW-PNL-6002* (WFIE Cabinet)	✓

5.2.7 Test Director VERIFY that section 5.2 is complete by SIGNING below.

Test Director Signature 9-24-99 Date

5.2.8 Quality Control Inspector VERIFY that section 5.2 is complete by signing below.

Quality Control Inspector Signature 9/24/99 Date

5.3. VERIFY DATA TABLE ACCESS MODULE AND OPERATOR CONTROL STATION ANALOG INPUT SIGNALS

Test exception

WATER TANK LEVEL

5.3.1 PREPARE the Water Tank Level Transmitter SALW-LT-6003* for test signals by PERFORMING the following:

5.3.1.1 ENSURE valve SALW-V-6029*, located in the bottom of SALW-PNL-6003* (WATER TANK ENCL), is CLOSED. ☐

5.3.1.2 ENSURE valve SALW-V-6031*, located in the bottom of SALW-PNL-6003* (WATER TANK ENCL), is CLOSED. ☐

5.3.2 CONNECT 0-50" test Manometer pressure source to the HIGH PRESSURE vent/test port of the level transmitter SALW-LT-6003*. ☐

5.3.3 VERIFY the LOW PRESSURE vent/test port of the level transmitter SALW-LT-6003* is OPEN to atmosphere. ☐

5.3.4 ADJUST the test Manometer on the SALW-LT-6003* to a pressure of ~~25~~ 31" Water Gauge (± 1"). ☐

5.3.5 RECORD the following:

OPERATOR CONTROL STATION WATER TANK LEVEL (RANGE: 28.5 TO 33.5 Inches)	DATA TABLE ACCESS MODULE WATER TANK LEVEL (RANGE: 28.5 TO 33.5 Inches)

Test Exception #1

5.3 VERIFY DATA TABLE ACCESS MODULE AND OPERATOR CONTROL STATION ANALOG INPUT SIGNALS (CONT.)

NOTE - Alarm should annunciate between ~~9.5~~ 11.7" and ~~10.5~~ 12.7" Water Gauge.

5.3.6 VERY SLOWLY DECREASE the Level Transmitter test Manometer pressure UNTIL the Data Table Access Module "PIC WATER LEVEL LOW" alarm (alarm 9) annunciates. ☐

5.3.7 VERIFY that the Water Tank Low Level alarm is displayed at the Operator Control Station. ☐

5.3.8 ACKNOWLEDGE the Water Tank Low Level alarm at the Operator Control Station and at the Data Table Access Module. ☐

5.3.9 OBSERVE the Operator Control Station and Data Table Access Module AND RECORD the water tank level readings below:

Test Exception

OPERATOR CONTROL STATION WATER TANK LEVEL (RANGE 11.7 to 12.7 inches Water Gauge)	DATA TABLE ACCESS MODULE WATER TANK LEVEL (RANGE 11.7 to 12.7 inches Water Gauge)

5.3.10 SLOWLY INCREASE the Level Transmitter test Manometer pressure to ~~12.5~~ 15.5" Water Gauge. ☐

5.3.11 OBSERVE the Operator Control Station and Data Table Access Module AND RECORD the water tank level readings below:

OPERATOR CONTROL STATION WATER TANK LEVEL (RANGE: 14.5 to 16.5 inches)	DATA TABLE ACCESS MODULE WATER TANK LEVEL (RANGE 14.5 to 16.5 inches)

5.3 VERIFY DATA TABLE ACCESS MODULE AND OPERATOR CONTROL STATION ANALOG INPUT SIGNALS (CONT.)

Test exception #1

5.3.12 VERIFY that the Water Tank Low Level alarm **CLEARS** at the Operator Control Station. ☐

5.3.13 **REMOVE** the test manometer from the SALW-LT-6003* high pressure vent/test port, AND **RE-INSTALL** vent plugs. ☐

5.3.14 **RESTORE** the Water Tank Level Transmitter SALW-LT-6003* by **PERFORMING** the following:

5.3.14.1 **OPEN** valve SALW-V-6039*, located in the bottom of SALW-PNL-6003* (WATER TANK ENCL). ☐

5.3.14.2 **OPEN** valve SALW-V-6031*, located in the bottom of SALW-PNL-6003* (WATER TANK ENCL). ☐

Test exception

5.3 VERIFY DATA TABLE ACCESS MODULE AND OPERATOR CONTROL STATION ANALOG INPUT SIGNALS (CONT.)

Test exception

WEIGHT FACTOR TEST

5.3.15 VERIFY that NO Programmable Logic Controller input signals are FORCED and that the forcing function is DISABLED. ☐

5.3.16 CONNECT the 0-500" Water Gauge test Manometer pressure source to the HIGH PRESSURE dip tube on the side of the "WFIE Cabinet". ☐

5.3.17 ENSURE SALW-V-6001* is CLOSED. ☐

5.3.18 ENSURE SALW-V-6005* is OPEN. ☐

5.3.19 ENSURE SALW-V-6006* is OPEN. ☐

Test exception

5.3.20 ENSURE adjustment valves on SALW-FIV-6002*, SALW-FIV-6003*, SALW-FIV-6004* are CLOSED. ☐

5.3.21 ENSURE SALW-WFT-6002* EQUALIZING valve located on SALW-V-6036* 3-Valve Manifold in cabinet SALW-PNL-6002* (WFIE Cabinet) is CLOSED. ☐

5.3.22 ENSURE the LOW side and HIGH side isolation valves, located on SALW-V-6036* 3-Valve Manifold in cabinet SALW-PNL-6002* (WFIE Cabinet) are OPEN. ☐

5.3 VERIFY DATA TABLE ACCESS MODULE AND OPERATOR CONTROL STATION ANALOG INPUT SIGNALS (CONT.)

Test exception 1

5.3.23 SET the test Manometer to 125" Water Gauge. ☐

5.3.24 OBSERVE Operator Control Station and Data Table Access Module AND RECORD the Weight Factor on the table below.

OPERATOR CONTROL STATION WEIGHT FACTOR READING (RANGE 120 to 130 inches)	DATA TABLE ACCESS MODULE WEIGHT FACTOR READING (RANGE 120 to 130 inches)

Test exception 1

5.3.25 BLEED off pressure from the manometer. ☐

5.3.26 DISCONNECT the 0-~~500"~~ test Manometer pressure source. ☐

5.3.27 CLOSE SALW-V-6006*. ☐

5.3.28 OPEN SALW-WFT-6002* equalizing valve, located on SALW-V-6036* 3-Valve Manifold in cabinet SALW-PNL-6002* (WFIE Cabinet). ☐

5.3.29 CLOSE the LOW side and HIGH side isolation valves, located on SALW-V-6036* 3-Valve Manifold in cabinet SALW-PNL-6002* (WFIE Cabinet). ☐

5.3 VERIFY DATA TABLE ACCESS MODULE AND OPERATOR CONTROL STATION ANALOG INPUT SIGNALS (CONT.)

Test exception 1

SPECIFIC GRAVITY TEST

NOTE - A mock signal to the specific gravity transmitter is required to keep a low saltwell level alarm from preventing testing of other instrumentation.

5.3.30 CONNECT the 0-50" Water Gauge test Manometer pressure source to the HIGH PRESSURE dip tube. ☐

5.3.31 ENSURE SALW-V-6007* is OPEN. ☐

5.3.32 ENSURE SALW-V-6005* is OPEN ☐

5.3.33 ENSURE the LOW side and the HIGH side isolation valves, located on SALW-V-6035* in cabinet SALW-PNL-6002* (WFIE Cabinet) are OPEN. ☐

5.3.34 CLOSE the Specific Gravity Transmitter equalizing valve located on SALW-V-6035* in cabinet SALW-PNL-6002* (WFIE Cabinet). ☐

5.3.35 SET the test Manometer to 5" Water Gauge (± .3"). ☐

5.3.36 OBSERVE Operator Control Station and Data Table Access Module AND RECORD the Specific Gravity reading on the table below.

OPERATOR CONTROL STATION SPECIFIC GRAVITY READING (RANGE 4.6 to 5.4 inches)	DATA TABLE ACCESS MODULE SPECIFIC GRAVITY READING (RANGE 4.65 to 5.35 inches)

5.3 VERIFY DATA TABLE ACCESS MODULE AND OPERATOR CONTROL STATION ANALOG INPUT SIGNALS (CONT.)

Test Exception #1

FLOW METER TEST

5.3.37 IF necessary to configure the flowmeter, UNPLUG the power cord to the SALW-FQIT-6001* (SUPERNATANT FLOW XMIT), located in cabinet SALW-PNL-6002* (WFIE Cabinet). ☐

5.3.38 IF a Brooks flowmeter is used, CONFIGURE SALW-FQIT-6001*, located in cabinet SALW-PNL-6002* (WFIE Cabinet), to receive signals from a hand held calibrator. ☐

5.3.39 ENSURE SALW-FQIT-6001* is powered and configured for simulated flow signals. ☐

5.3.40 SIMULATE a flow signal of 2.0 gpm (50% span) with the hand held calibrator, or from flowmeter face plate. ☐

5.3.41 VERIFY the SALW-FQIT-6001* transmitter is operating properly by RECORDING the following:

OPERATOR CONTROL STATION 'SUPERNATANT FLOW (RANGE: 1.8 to 2.2 GPM)	DATA TABLE ACCESS MODULE SUPERNATANT FLOW (RANGE: 1.8 TO 2.2 GPM)	SUPERNATANT FLOW XMIT SUPERNATANT FLOW (RANGE: 1.8 TO 2.2 GPM)

5.3.42 RESTORE the SALW-FQIT-6001* (SUPERNATANT FLOW TRANSMITTER) to its original configuration. ☐

5.3 VERIFY DATA TABLE ACCESS MODULE AND OPERATOR CONTROL STATION ANALOG INPUT SIGNALS (CONT.)

Test Exception R1

NOTE - This test section only performed when jet pump jumper and pump are physically mated in the shop on the run-in stand or in the field when run in-stand is available.

DISCHARGE PRESSURE TEST

5.3.43 ENSURE Pump recirculation apparatus is filled with water AND configured to circulate water through the saltwell Jet Pump jumper. ☐

5.3.44 PLACE JR-1 valve in the PROCESS position. ☐

5.3.45 At the discretion of the Test Director, INSTALL temporary interlock jumpers, OR INITIATE a software force on pump permissive interlocks for equipment not installed or out of service. ☐

5.3.46 USING the Data Table Access Module, START the Jet Pump. ☐

5.3.47 RECORD the following pressures on the table below:

SALW-PI-6012* JET PUMP SUCTION PRESSURE	TEST GAUGE PI-1	DTAM DISCHARGE PRESSURE	SALW-PI-6011* JET PUMP DISCHARGE PRESSURE	TEST GAUGE PI-2

5.3.48 Using the Data Table Access Module, STOP the Jet Pump. ☐

5.3 VERIFY DATA TABLE ACCESS MODULE AND OPERATOR CONTROL STATION ANALOG INPUT SIGNALS (CONT.)

Test Exception # 1

PIT FLAMMABLE GAS MONITOR TEST

5.3.49 CONNECT a current source to model 4.0 FGM TB2 terminals 15(+) and 16(-) or model 4.46 FGM wires 501(+) and 502(-) at PLC-AO, located in the pit flammable gas monitor electrical cabinet or in the PICS Instrument Enclosure, PLC MODULE 1, IN 0(+) and IN 0(-). ☐

5.3.50 SET current source to 4 mA (±.25 mA). ☐

5.3.51 RECORD the Data Table Access Module Flammable Gas DISPLAY on the "Pit FGM Input/Output Table" below. ☐

5.3.52 SET current source to 10 mA (±.25 mA). ☐

5.3.53 RECORD the Data Table Access Module Flammable Gas display on the "Pit FGM Input/Output Table" below. ☐

5.3.54 SET current source to 20 mA (±.25 mA). ☐

5.3.55 RECORD the Data Table Access Module Flammable Gas display on the "Pit FGM Input/Output Table" below. ☐

Exception 2

Pit FGM Input/Output Table	
Input (mA)	Output (as displayed on Data Table Access Module)
4	
10	
20	

5.3.56 DISCONNECT the current source, AND if necessary

RESTORE loop intercepted in step 5.3.49 (located in pit FGM). ☐

5.3 VERIFY DATA TABLE ACCESS MODULE AND OPERATOR CONTROL STATION ANALOG INPUT SIGNALS (CONT.)

Test exception #1

NOTE - This test section only performed if a dome space FGM is installed.

DOME SPACE FLAMMABLE GAS MONITOR TEST

5.3.57 CONNECT a current source to model 4.0 FGM TB2 terminals 15(+) and 16(-) or model 4.46 FGM wires 501(+) and 502(-) at PLC-A0, located in the dome space flammable gas monitor electrical cabinet or in the PICS Instrument Enclosure, PLC MODULE 6, IN 0(+) and IN 0(-). ☐

5.3.58 SET current source to 4 mA (±.25 mA). ☐

5.3.59 RECORD the Data Table Access Module Flammable Gas DISPLAY on the "Dome Space FGM Input/Output Table" below. ☐

5.3.60 SET current source to 10 mA (±.25 mA). ☐

5.3.61 RECORD the Data Table Access Module Flammable Gas display on the "Dome Space FGM Input/Output Table" below. ☐

5.3.62 SET current source to 20 mA (±.25 mA). ☐

5.3.63 RECORD the Data Table Access Module Flammable Gas display on the "Dome Space FGM Input/Output Table" below. ☐

Dome Space FGM Input/Output Table	
Input (mA)	Output (as displayed on Data Table Access Module)
4	
10	
20	

5.3.64 DISCONNECT the current source, AND if necessary

RESTORE loop intercepted in step 5.3.57 (located in dome space FGM). ☐

5.3 VERIFY DATA TABLE ACCESS MODULE AND OPERATOR CONTROL STATION ANALOG INPUT SIGNALS (CONT.)

Test exception #1

THERMOCOUPLE TEST

5.3.65 WARM thermocouple SALW-TE-6004*, located in the Instrument Enclosure. ☐

5.3.66 VERIFY Data Table Access Module and Operator Control Station display a changed temperature (Operator Control Station and Data Table Access Module should match ±2° F).

Test Director Signature _____ Date _____

5.3.67 ALLOW SALW-TE-6004* to return to ambient temperature. ☐

5.3.68 WARM thermocouple SALW-TE-6003*, located in SALW-PNL-6001* INSTRUMENT AIR ENCLOSURE. ☐

5.3.69 VERIFY Data Table Access Module and Operator Control Station DISPLAY a changed temperature. (Operator Control Station and Data Table Access Module should match ±2° F).

Test Director Signature _____ Date _____

5.3.70 ALLOW SALW-TE-6003* to return to ambient temperature. ☐

5.3.71 WARM thermocouple SALW-TE-6001*, located on the Jet Pump. ☐

5.3.72 VERIFY Data Table Access Module and Operator Control Station DISPLAY a changed temperature. (Operator Control Station and Data Table Access Module should match ±2° F).

Test Director Signature _____ Date _____

5.3.73 ALLOW SALW-TE-6001* to return to ambient temperature. ☐

Test exception

5.3 VERIFY DATA TABLE ACCESS MODULE AND OPERATOR CONTROL STATION ANALOG INPUT SIGNALS (CONT.)

Test Exception #1

5.3.74 WARM thermocouple SALW-TE-6002* (Jet Pump over temperature thermocouple located on the saltwell Jet Pump jumper). ☐

5.3.75 VERIFY Data Table Access Module and Operator Control Station DISPLAY a changed temperature (Operator Control Station and Data Table Access Module should match ±2° F).

Test Director Signature _____ Date _____

5.3.76 ALLOW SALW-TE-6002* to return to ambient temperature. ☐

5.3.77 REMOVE any jumpers or forces NOT required for the next test section. ☐

5.3.78 Test Director VERIFY that section 5.3 is complete by SIGNING below.

Test Director Signature _____ Date _____

5.3.79 Quality Control Inspector VERIFY that section 5.3 is complete by signing below.

Quality Control Inspector Signature _____ Date _____

5.4 VERIFY DATA TABLE ACCESS MODULE AND OPERATOR CONTROL STATION DISCRETE SIGNAL INPUTS

Test Exception #1

VALVE POSITION TEST

5.4.1 ENSURE the JR-1 valve is in the PROCESS position. ☐

5.4.2 VERIFY the JR-1 valve indicates "norm" at the Data Table Access Module AND "PROCESS" position at the Operator Control Station. ☐

5.4.3 PLACE the JR-1 valve in the FLUSH position. ☐

5.4.4 VERIFY the JR-1 valve indicates "NON-PROCESS" at the Data Table Access Module AND "FLUSH" position at the Operator Control Station. ☐

5.4.5 PLACE the JR-1 valve in the PRIME position. ☐

5.4.6 VERIFY the JR-1 valve indicates "NON-PROCESS" at the Data Table Access Module AND "PRIME" position at the Operator Control Station. ☐

FLUSH LINE PRESSURE TEST

5.4.7 PLACE the JR-1 valve in the PROCESS position. ☐

5.4.8 VERIFY a water supply is connected to the jumper flush hose. ☐

5.4.9 ENSURE Pump recirculation apparatus is filled with water AND configured to circulate water through the saltwell Jet Pump jumper. ☐

5.4 VERIFY DATA TABLE ACCESS MODULE AND OPERATOR CONTROL STATION DISCRETE SIGNAL INPUTS (Cont.)

Test exception #8 1

5.4.10 At the discretion of the Test Director, ENSURE temporary interlock jumpers, OR software forces have been installed on pump permissive interlocks for equipment not installed or out of service. ☐

5.4.11 USING the Data Table Access Module, START the Jet Pump. ☐

5.4.12 VERIFY the Jet Pump OPERATION at the Operator Control Station. ☐

5.4.13 ACTUATE pressure ~~switch SALW-PSH-6002*~~ transducer SALW-PT-6014* (old name "PS-2") ~~or SALW-PI-6014*~~ by PRESSURIZING the flush line with water. ☐

5.4.14 VERIFY the Jet Pump IMMEDIATELY shuts down at the Data Table Access Module and Operator Control Station. ☐

5.4.15 VERIFY flush line high pressure alarm *3, "FLUSH PRESSURE HI~~GH~~" annunciates at the Data Table Access Module and Operator Control Station. ☐

5.4.16 SHUT OFF the water supply to the flush line. ☐

5.4.17 CYCLE the JR-1 valve to CLEAR the flush line high pressure alarm. ☐

5.4 VERIFY DATA TABLE ACCESS MODULE AND OPERATOR CONTROL STATION DISCRETE SIGNAL INPUTS (Cont.)

Test Exception # R-1

LOW PRESSURE INTERLOCK

5.4.18 PLACE the JR-1 valve in the PROCESS position. ☐

5.4.19 ENSURE ALL alarms have been acknowledged at Data Table Access Module and Operator Control Station. ☐

5.4.20 ENSURE the pump is NOT primed. ☐

5.4.21 ENSURE the Diaphragm Operated Valve is CLOSED. ☐

5.4.22 USING the Data Table Access Module, START the Jet Pump. ☐

5.4.23 VERIFY the Jet Pump shuts down in approximately thirty (30) seconds (±5 seconds). ☐

5.4.24 VERIFY transfer line low pressure alarm #1 "XFR Pressure LOW" annunciates at the Data Table Access Module and Operator Control Station. ☐

5.4.25 ACKNOWLEDGE alarms at Data Table Access Module and Operator Control Station. ☐

Test Exception

5.4 VERIFY DATA TABLE ACCESS MODULE AND OPERATOR CONTROL STATION DISCRETE SIGNAL INPUTS (Cont.)

Test Exception #1

NOTE - This test section only performed when jet pump jumper and pump are physically mated in the shop on the run-in stand or in the field when run in-stand is available.

HIGH PRESSURE INTERLOCK

5.4.26 PLACE the JR-1 valve in the PRIME position. ☐

5.4.27 IF a water ram will be used, using skill of the craft CONNECT a water ram to the jet pump jumper AND SLOWLY PRESSURIZE the pump and jumper to 140 psi using water. ☐

5.4.28 IF pump will develop 140 psi, START jet pump with JR-2, BYPASS valve and DOV closed. ☐

5.4.29 VERIFY that the "XFR Pressure HIGH" alarms at Data Table Access Module (Alarm *2) and Operator Control Station when pressure reaches 140 psi (±10 psi). ☐

5.4.30 ACKNOWLEDGE alarms at Data Table Access Module and Operator Control Station. ☐

RECIRCULATION FLOWMETER TEST

5.4.31 PLACE the JR-1 valve in the PROCESS position. ☐

5.4.32 ENSURE Pump recirculation apparatus is filled with water AND configured to circulate water through the saltwell Jet Pump jumper. ☐

5.4.33 CONFIGURE SALW-FI-6001* (PMP RECIRC FLOW) to receive signals from a control and display unit. ☐

5.4 VERIFY DATA TABLE ACCESS MODULE AND OPERATOR CONTROL STATION DISCRETE SIGNAL INPUTS (Cont.)

Test Exception #8 1

5.4.34 CONFIGURE the control and display unit to simulate flow signals using the Installation, Diagnostics, Test/Control Mode, AN CAL function. ☐

5.4.35 SIMULATE a flow signal of 0.6 gpm with the control and display unit. ☐

5.4.36 At the discretion of the Test Director, ENSURE temporary interlock jumpers OR software forces have been installed on pump permissive interlocks for equipment not installed or out of service. ☐

5.4.37 USING the Data Table Access Module, START the Jet Pump. ☐

5.4.38 VERIFY the Jet Pump OPERATION at the Operator Control Station. ☐

5.4.39 SIMULATE a flow signal of 0.4 gpm with the control and display unit. ☐

5.4.40 VERIFY the Jet Pump shuts down (after 30 ±5 sec.) at the Data Table Access Module and Operator Control Station. ☐

5.4.41 VERIFY Jet Pump recirculation line low flow alarm *21, "RECIRCULATION FAILURE" annunciates at the Data Table Access Module and Operator Control Station. ☐

5.4.42 RESTORE SALW-FI-6001* to its original configuration. ☐

5.4.43 CYCLE the JR-1 valve to CLEAR the Jet Pump recirculation line low flow alarm. ☐

5.4 VERIFY DATA TABLE ACCESS MODULE AND OPERATOR CONTROL STATION DISCRETE SIGNAL INPUTS (Cont.)

See test exception #21

RECIRCULATION FLUSH LINE PRESSURE TEST

5.4.44 PLACE the JR-1 valve in the PROCESS position. ☐

5.4.45 VERIFY a water supply is connected to the recirculation flush line. ☐

5.4.46 ENSURE Pump recirculation apparatus is filled with water AND configured to circulate water through the saltwell Jet Pump jumper. ☐

5.4.47 At the discretion of the Test Director, ENSURE temporary interlock jumpers OR software forces have been installed on pump permissive interlocks for equipment not installed or out of service. ☐

5.4.48 USING the Data Table Access Module, START the Jet Pump. ☐

5.4.49 VERIFY the Jet Pump OPERATION at the Operator Control Station. ☐

5.4.50 ACTUATE pressure ~~indicator~~ transducer SALW-PT-6013* (RECIRC FLUSH PRESS) by PRESSURIZING the recirculation flush line with water. ☐

5.4.51 VERIFY the Jet Pump IMMEDIATELY shuts down at the Data Table Access Module and Operator Control Station. ☐

5.4.52 VERIFY recirculation flush line high pressure alarm *39, "RECIRC FLUSH PRSS HI" annunciates at the Data Table Access Module and Operator Control Station. ☐

5.4.53 SHUT OFF the water supply to the recirculation flush line. ☐

5.4.54 CYCLE the JR-1 valve to CLEAR the recirculation flush line high pressure alarm. ☐

5.4 VERIFY DATA TABLE ACCESS MODULE AND OPERATOR CONTROL STATION DISCRETE SIGNAL INPUTS (Cont.)

Test exception #1

5.4.55 REMOVE any jumpers or forces NOT required for the next test section. ☐

5.4.56 Test Director VERIFY that section 5.4 is complete by SIGNING below.

Test Director Signature _____ Date _____

5.4.57 Quality Control Inspector VERIFY that section 5.4 is complete by signing below.

Quality Control Inspector Signature _____ Date _____

Test exception

5.5 VERIFY DATA TABLE ACCESS MODULE AND OPERATOR CONTROL STATION MONITOR/ALARM FUNCTIONS

Test Exception #1

5.5.1 At the discretion of the Test Director, ENSURE temporary interlock jumpers, OR software forces are in place for uninstalled equipment. ☐

5.5.2 SET the test manometer on the specific gravity transmitter to 13" Water Gauge. ☐

5.5.3 ENSURE the following valves are OPEN:

Valve Number	✓
SALW-V-6034*	
SALW-V-6026*	
SALW-V-6001*	
SALW-V-6004*	
SALW-V-6002*	

5.5.4 ENSURE Pump recirculation apparatus is filled with water AND configured to circulate water through the saltwell Jet Pump. ☐

5.5.5 START the Jet Pump using the Data Table Access Module, AND PLACE the system in automatic. ☐

5.5.6 VERIFY the DIAPHRAGM OPERATED VALVE moves OPEN. ☐

5.5.7 OBSERVE the Operator Control Station and Data Table Access Module AND RECORD the specific gravity readings below:

OPERATOR CONTROL STATION SPECIFIC GRAVITY READING (RANGE 12.6 to 13.4 inches)	DATA TABLE ACCESS MODULE SPECIFIC GRAVITY READING (RANGE 12.65 to 13.35 inches)

5.5 VERIFY DATA TABLE ACCESS MODULE AND OPERATOR CONTROL STATION MONITOR/ALARM FUNCTIONS (CONT.)

Test Exception #1

5.5.8 VERY SLOWLY DECREASE the test manometer pressure until the Data Table Access Module "SGT LOW" alarm (alarm *13) annunciates. ☐

NOTE - SALW-PI-6005* pressure is to be recorded in the table below when DOV position indicates fully closed.

5.5.9 VERIFY AND ACKNOWLEDGE the Specific Gravity Low Alarm (Saltwell LOW Level) at the Data Table Access Module and Operator Control Station. ☐

5.5.10 RECORD the following:

PARAMETER	READING
OPERATOR CONTROL STATION SPECIFIC GRAVITY (RANGE 3 to 4)	
DATA TABLE ACCESS MODULE SPECIFIC GRAVITY (RANGE 3 to 4)	
SPECIFIC GRAVITY MANOMETER READING (RANGE 3 to 4 inches Water Gauge)	
DOV POSITION (% OPEN) [RANGE - FULLY CLOSED]	
SALW-PI-6005* PRESSURE (RANGE 2 to 4 psig)	

5.5.11 VERY SLOWLY INCREASE the test manometer pressure to 10 inches Water Gauge. ☐

5.5.12 OBSERVE the Operator Control Station and Data Table Access Module AND RECORD the specific gravity readings below:

OPERATOR CONTROL STATION SPECIFIC GRAVITY READING (RANGE 9 to 11 inches)	DATA TABLE ACCESS MODULE SPECIFIC GRAVITY READING (RANGE 9 to 11 inches)

5.5 VERIFY DATA TABLE ACCESS MODULE AND OPERATOR CONTROL STATION MONITOR/ALARM FUNCTIONS (CONT.)

Test exception #1

5.5.13 VERIFY that the Specific Gravity Low Alarm **CLEARS** at the Operator Control Station and at the Data Table Access Module. ☐

5.5.14 VERIFY the Diaphragm Operated Valve moves OPEN. ☐

5.5.15 REMOVE any jumpers or forces NOT required for the next test section. ☐

5.5.16 SHUT OFF the jet pump using the Data Table Access Module. ☐

5.5.17 Test Director VERIFY that section 5.5 is complete by **SIGNING** below.

Test exception

_____ _____
Test Director Signature Date

5.5.18 Quality Control Inspector **VERIFY** that section 5.5 is complete by signing below.

_____ _____
Quality Control Inspector Signature Date

5.6 REMOTE SETPOINT CHANGE USING THE OPERATOR CONTROL STATION

see test exception #1

5.6.1 PLACE the saltwell jumper JR-1 valve in the PROCESS position. ☐

5.6.2 ENSURE pump recirculation apparatus is filled with water AND configured to circulate water through the saltwell Jet Pump. ☐

5.6.3 START the Jet Pump using the Data Table Access Module. ☐

5.6.4 SET the "DOV" Specific Gravity setpoint to 8 inches at the Operator Control Station. ☐

5.6.5 VERIFY that the "DOV" Specific Gravity setpoint is 8 inches at the Data Table Access Module AND the Operator Control Station.

_____ _____
Test Director Signature Date

5.6.6 SET the "DOV" Specific Gravity setpoint to 6 inches at the Data Table Access Module. ☐

5.6.7 VERIFY that the "DOV" Specific Gravity setpoint is 6 inches at the Operator Control Station.

_____ _____
Test Director Signature Date

5.6.8 USING Data Table Access Module, STOP the Jet Pump. ☐

5.6.9 Test Director VERIFY that section 5.6 is complete by SIGNING below.

_____ _____
Test Director Signature Date

5.6.10 Quality Control Inspector VERIFY that section 5.6 is complete by signing below.

_____ _____
Quality Control Inspector Signature Date

5.7 DATA TABLE ACCESS MODULE AND OPERATOR CONTROL STATION DIAPHRAGM OPERATED VALVE AUTOMATIC/MANUAL OPERATION

Test exception #1

NOTE - This system is a Proportional Integral Derivative controller for controlling the liquid level in the saltwell screen. The Specific Gravity Transmitter reads unadjusted liquid level once the middle diptube leg is uncovered by declining liquid levels.

The system uses the signal from the Specific Gravity Transmitter as the Process Variable. The controller compares the process variable to the setpoint and adjusts the Diaphragm Operated Valve position accordingly (manipulated variable).

The purpose of this test section is to verify that the Diaphragm Operated Valve trend is toward achieving the setpoint while different process variables are simulated.

DATA TABLE ACCESS MODULE (AUTOMATIC)

5.7.1 **ENSURE** the Saltwell Pump and Jumper Assembly, **AND** the Pumping and Instrumentation Control Skid are configured for AUTOMATIC Diaphragm Operated Valve level control by **PERFORMING** the following:

5.7.1.1 **SET** the test manometer on the Specific Gravity Transmitter to a pressure of 0" Water Gauge. ☐

5.7.1.2 **ENSURE** the following valves are OPEN:

Valve Number	✓
SALW-V-6034*	
SALW-V-6026*	
SALW-V-6001*	
SALW-V-6004*	
SALW-V-6002*	

5.7.1.3 **PLACE** the saltwell jumper JR-1 valve in the PROCESS position. ☐

5.7.1.4 At the discretion of the Test Director, **ENSURE** temporary interlock jumpers, OR software forces have been installed on pump permissive interlocks for equipment not installed or out of service. ☐

5.7 DATA TABLE ACCESS MODULE AND OPERATOR CONTROL STATION DIAPHRAGM OPERATED VALVE AUTOMATIC/MANUAL OPERATION (Cont.)

Test exception #7-1

5.7.1.5 ENSURE that only alarms "JET PUMP SHUTDOWN" (Alarm 12) and "SGT LOW" (Alarm 13) on the Data Table Access Module are displayed. ☐

5.7.1.6 ENSURE pump recirculation apparatus is filled with water AND CONFIGURED to circulate water through the saltwell Jet Pump. ☐

5.7.1.7 START the Jet Pump using the Data Table Access Module. ☐

5.7.1.8 SET DIAPHRAGM OPERATED VALVE Specific Gravity Controller to AUTO with setpoint of seven (7) inches USING the Data Table Access Module. ☐

5.7.1.9 SET the test manometer to a pressure of 14" Water Gauge. ☐

5.7.1.10 VERIFY that the Diaphragm Operated Valve moves to a more OPEN position. ☐

5.7.1.11 SET the test manometer to a pressure of 6" Water Gauge. ☐

5.7.1.12 VERIFY that the Diaphragm Operated Valve moves to a more CLOSED position. ☐

Test exception

5.7 DATA TABLE ACCESS MODULE AND OPERATOR CONTROL STATION DIAPHRAGM OPERATED VALVE AUTOMATIC/MANUAL OPERATION (Cont.)

Test Exception #1

OPERATOR CONTROL STATION (AUTO)

5.7.15 ENSURE the Saltwell Pump and Jumper Assembly AND Pumping and Instrumentation Control Skid are CONFIGURED for AUTOMATIC Diaphragm Operated Valve level control by PERFORMING the following:

5.7.15.1 SET the test manometer to a pressure of 0" Water Gauge. ☐

5.7.15.2 ENSURE the following valves are OPEN:

Valve Number	✓
SALW-V-6034*	
SALW-V-6026*	
SALW-V-6001*	
SALW-V-6004*	
SALW-V-6002*	

5.7.15.3 ENSURE the saltwell jumper JR-1 valve is in the PROCESS position. ☐

5.7.15.4 At the discretion of the Test Director, ENSURE temporary interlock jumpers, OR software forces have been installed on pump permissive interlocks for equipment not installed or out of service. ☐

5.7.15.5 ENSURE that only alarms "JET PUMP SHUTDOWN" and "SGT LOW" are displayed on the Operator Control Station. ☐

5.7.15.6 ENSURE pump recirculation apparatus is filled with water AND CONFIGURED to circulate water through the saltwell Jet Pump. ☐

5.7 DATA TABLE ACCESS MODULE AND OPERATOR CONTROL STATION DIAPHRAGM OPERATED VALVE AUTOMATIC/MANUAL OPERATION (Cont.)

Test exception #1

5.7.15.7 START the Jet Pump USING the Data Table Access Module. ☐

5.7.15.8 SET the Specific Gravity Controller to AUTO with setpoint of 7.0 inches USING the Operator Control Station. ☐

5.7.15.9 SET the test manometer to a pressure of 14" Water Gauge (± 1"). ☐

5.7.15.10 VERIFY that the Diaphragm Operated Valve moves to a more OPEN position. ☐

5.7.15.11 SET the test manometer to a pressure of 6" Water Gauge. ☐

5.7.15.12 VERIFY that the Diaphragm Operated Valve moves to a more CLOSED position. ☐

5.7.16 VERIFY that the MANUAL CONTROL of the Diaphragm Operated Valve is operational by PERFORMING the following steps:

5.7.16.1 SET the test manometer to a pressure of 15" Water Gauge (± 1"). ☐

5.7.16.2 SET the "DOV" Specific Gravity Controller to MANUAL CONTROL USING the Operator Control Station. ☐

5.7 DATA TABLE ACCESS MODULE AND OPERATOR CONTROL STATION DIAPHRAGM OPERATED VALVE AUTOMATIC/MANUAL OPERATION (Cont.)

Test Exception #R-1

5.7.17 SET the Diaphragm Operated Valve to 0% Open USING the manual control on the Operator Control Station. ☐

5.7.18 RECORD the following:

DIAPHRAGM OPERATED VALVE POSITION (% OPEN) [RANGE - FULLY CLOSED (0-10% OPEN)]	SALW-PI-6005* PRESSURE (RANGE 2 to 4 psig)

5.7.19 SET the Diaphragm Operated Valve to 25% OPEN using the manual control on the Operator Control Station. ☐

5.7.20 RECORD the following:

DIAPHRAGM OPERATED VALVE POSITION (% OPEN) [RANGE: 15% to 35%]	SALW-PI-6005* PRESSURE (RANGE: 5 to 7 psig)

5.7.21 SET the Diaphragm Operated Valve to 75% OPEN using the manual control on the Operator Control Station. ☐

5.7.22 RECORD the following:

DIAPHRAGM OPERATED VALVE POSITION (% OPEN) [RANGE: 65% to 85%]	SALW-PI-6005* PRESSURE (RANGE: 11 to 13 psig)

5.7 DATA TABLE ACCESS MODULE AND OPERATOR CONTROL STATION DIAPHRAGM OPERATED VALVE AUTOMATIC/MANUAL OPERATION (Cont.)

Test Exc gatn' #8 1

5.7.23 SET the Diaphragm Operated Valve to 100% OPEN using the manual control on the Operator Control Station. ☐

5.7.24 RECORD the following:

DIAPHRAGM OPERATED VALVE POSITION (% OPEN) [RANGE: 90% to 110%]	SALW-PI-6005* PRESSURE RANGE: 14 to 16 psig

5.7.25 VERY SLOWLY DECREASE the test manometer pressure while OBSERVING the Diaphragm Operated Valve. ☐

5.7.26 VERIFY that the Diaphragm Operated Valve remains FULLY OPEN while the test manometer is DECREASED UNTIL the Operator Control Station "SGT LOW" annunciates. ☐

5.7.27 VERIFY that the Diaphragm Operated Valve IMMEDIATELY CLOSES when the Operator Control Station "SGT LOW" annunciates. ☐

5.7.28 SHUTDOWN the Jet Pump with the Operator Control Station. ☐

5.7.29 VERIFY the Jet Pump SHUT DOWN at the Operator Control Station. ☐

5.7 DATA TABLE ACCESS MODULE AND OPERATOR CONTROL STATION DIAPHRAGM OPERATED VALVE AUTOMATIC/MANUAL OPERATION (Cont.)

Test exception #1

5.7.30 REMOVE any jumpers or forces NOT required for the next test section. ☐

5.7.31 Test Director VERIFY that section 5.7 is complete by SIGNING below.

Test Director Signature _____ Date _____

5.7.32 Quality Control Inspector VERIFY that section 5.7 is complete by signing below.

Quality Control Inspector Signature _____ Date _____

Test exception

5.8 JET PUMP FLOWMETER OPERATION

Test Exception #1

5.8.1 ENSURE that the Saltwell Jumper Flow Element is communicating properly with the FQIT SALW-FQIT-6001* (SUPERNATANT FLOW XMIT) and Data Table Access Module by **PERFORMING** the following:

5.8.1.1 **PLACE** the saltwell jumper JR-1 valve in the PROCESS position. ☐

5.8.1.2 **ENSURE** Pump recirculation apparatus is filled with water **AND** configured to circulate water through the saltwell Jet Pump. ☐

5.8.1.3 **ENSURE** the 0 - 50 inch test manometer is still attached to the high pressure dip tube **AND** set to 15" Water Gauge (± 1"). ☐

5.8.1.4 **ENSURE** a rotameter has been installed in series with the jumper flow element. ☐

5.8.1.5 **ENSURE** that both the Data Table Access Module and Operator Control Station are configured for MANUAL CONTROL. ☐

5.8.1.6 At the discretion of the Test Director, **ENSURE** temporary interlock jumpers, OR software forces are in place for uninstalled equipment. ☐

5.8.1.7 **SET** the Diaphragm Operated Valve to 0% OPEN using the manual control on the Data Table Access Module. ☐

5.8.1.8 **ADJUST** Jet Pump Jumper Valve JR-2 as directed by the Test Director to achieve the required flow rates in the following steps. ☐

5.8 JET PUMP FLOWMETER OPERATION (Cont.)

Test Exception #1

5.8.1.9 START the Jet Pump using the Data Table Access Module. ☐

5.8.1.10 VERIFY the start of the Jet Pump at the Operator Control Station. ☐

5.8.2 RECORD initial readings, and the time reading were taken.

DATA TABLE ACCESS MODULE TOTALIZER (Gallons)	FQIT TOTALIZER GALLONS	TIME

5.8.3 SET the Diaphragm Operated Valve Controller to MANUAL AND ADJUST Controller at the Data Table Access Module to obtain a flowrate of APPROXIMATELY 1.0 GPM (±0.05 gpm) through the jumper. ☐

5.8.4 RECORD the following:

DTAM MANUAL CONTROL DOV POSITION (%)	OCS MANUAL CONTROL DOV POSITION (%)	DOV POSITION (% OPEN)	TEST ROTAMETER FLOWRATE (GPM)	(INSTR) FQIT FLOWRATE (GPM)	DTAM FLOWRATE (GPM)	OCS FLOWRATE (GPM)	DTAM TOTALIZER (GALLONS)	FQIT TOTALIZER (GALLONS)

5.8.5 VERIFY that Test Rotameter flowrate, FQIT SALW-FQIT-6001* flowrate, Data Table Access Module flowrate, AND Operator Control Station flowrate are within ±0.1 gpm .

Test Director Signature _____ Date _____

5.8 JET PUMP FLOWMETER OPERATION (Cont.)

Test Exception #1

5.8.6 SUBTRACT totalizer INITIAL reading for Data Table Access Module from the current totalizer reading for Data Table Access Module.

RECORD result: _____ gallons

☐

5.8.7 SUBTRACT INITIAL totalizer reading for FQIT from the current totalizer reading for the FQIT.

RECORD result: _____ gallons

☐

5.8.8 VERIFY results from the above two steps are within ± 5.0 gallons.

☐

5.8.9 ADJUST the Diaphragm Operated Valve Controller to obtain a flowrate of APPROXIMATELY 2.5 GPM (±0.125 gpm) through the jumper.

☐

5.8.10 RECORD the following:

DTAM MANUAL CONTROL DOV POSITION (%)	OCS MANUAL CONTROL DOV POSITION (%)	DOV POSITION (% OPEN)	TEST ROTAMETER FLOWRATE (GPM)	(INSTR) FQIT FLOWRATE (GPM)	DTAM FLOWRATE (GPM)	OCS FLOWRATE (GPM)	DTAM TOTALIZER (GALLONS)	FQIT TOTALIZER (GALLONS)

5.8.11 VERIFY that Test Rotameter flowrate, FQIT SALW-FQIT-6001* flowrate, Data Table Access Module flowrate, AND Operator Control Station flowrate are within ±0.25 gpm .

☐

Test Exception #2

5.8 JET PUMP FLOWMETER OPERATION (Cont.)

Test Exception #21

5.8.12 SUBTRACT totalizer INITIAL reading for Data Table Access Module from the current totalizer reading for Data Table Access Module.

RECORD result: _____ gallons ☐

5.8.13 SUBTRACT INITIAL totalizer reading for FQIT from the current totalizer reading for the FQIT.

RECORD result: _____ gallons ☐

5.8.14 VERIFY results from the above two steps are within ± 5.0 gallons. ☐

5.8.15 ADJUST the Diaphragm Operated Valve Controller to obtain a flowrate of APPROXIMATELY 3.0 GPM (±0.15 gpm) through the jumper. ☐

5.8.16 RECORD the following:

DTAM MANUAL CONTROL DOV POSITION (%)	OCS MANUAL CONTROL DOV POSITION (%)	DOV POSITION (% OPEN)	TEST ROTAMETER FLOWRATE (GPM)	(INSTR) FQIT FLOWRATE (GPM)	DTAM FLOWRATE (GPM)	OCS FLOWRATE (GPM)	DTAM TOTALIZER (GALLONS)	FQIT TOTALIZER (GALLONS)

5.8.17 VERIFY that Test Rotameter flowrate, FQIT SALW-FQIT-6001* flowrate, Data Table Access Module flowrate, AND Operator Control Station flowrate are within ±0.3 gpm .

_____ _____
Test Director Signature Date

5.8 JET PUMP FLOWMETER OPERATION (Cont.)

Test Exception #1

5.8.18 SUBTRACT totalizer INITIAL reading for Data Table Access Module from the current totalizer reading for Data Table Access Module.

RECORD result: _____ gallons ☐

5.8.19 SUBTRACT INITIAL totalizer reading for FQIT from the current totalizer reading for the FQIT.

RECORD result: _____ gallons ☐

5.8.20 VERIFY results from the above two steps are within ± 5.0 gallons. ☐

5.8.21 CLOSE the Diaphragm Operated Valve (to 0%) using the manual Diaphragm Operated Valve control. ☐

5.8.22 VERIFY JR-2 is CLOSED. ☐

Test Exception

5.8.23 RECORD the following:

DTAM MANUAL CONTROL DOV POSITION (%)	OCS MANUAL CONTROL DOV POSITION (%)	DOV POSITION (% OPEN)	TEST ROTAMETER FLOWRATE (GPM)	(INSTR) FQIT FLOWRATE (GPM)	DTAM FLOWRATE (GPM)	OCS FLOWRATE (GPM)	DTAM TOTALIZER (GALLONS)	FQIT TOTALIZER (GALLONS)

5.8.24 VERIFY that Test Rotameter flowrate, FQIT SALW-FQIT-6001* flowrate, Data Table Access Module flowrate, AND Operator Control Station flowrate all indicate 0.0 gpm (±0.1 gpm) .

_____ _____
Test Director Signature Date

5.8 JET PUMP FLOWMETER OPERATION (Cont.)

Test Exception #1 #2

5.8.25 SUBTRACT totalizer INITIAL reading for Data Table Access Module from the current totalizer reading for Data Table Access Module.

RECORD result: _____ gallons

5.8.26 SUBTRACT INITIAL totalizer reading for FQIT from the current totalizer reading for the FQIT.

RECORD result: _____ gallons

5.8.27 VERIFY results from the above two steps are within ± 5.0 gallons.

Test Exception

5.8.28 USING the Data Table Access Module, STOP the Jet Pump.

5.8.29 REMOVE the test manometer.

5.8.30 ISOLATE the Specific Gravity Transmitter from the system.

NOTE - All three valves are located on the Specific Gravity Transmitter three valve manifold SALW-V-6035*.

5.8.30.1 OPEN the equalization valve for the Specific Gravity Transmitter.

5.8.30.2 CLOSE the two (2) isolation valves.

5.8 JET PUMP FLOWMETER OPERATION (Cont.)

5.8.31 REMOVE any jumpers or forces NOT required for the next test section. ☐

Test exception #7

5.8.32 Test Director VERIFY that section 5.8 is complete by SIGNING below.

Test Director Signature _____ Date _____

5.8.33 Quality Control Inspector VERIFY that section 5.8 is complete by signing below.

Quality Control Inspector Signature _____ Date _____

Test exception

5.9 JET PUMP VALVING INTERLOCK FOR THE JET PUMP

Test exception #2

5.9.1 ENSURE Pump recirculation apparatus is filled with water AND configured to circulate water through the saltwell Jet Pump. ☐

5.9.2 ENSURE all alarms have been acknowledged at the Data Table Access Module and Operator Control Station. ☐

5.9.3 At the discretion of the Test Director, ENSURE temporary interlock jumpers, OR software forces have been installed on pump permissive interlocks for equipment not installed or out of service. ☐

5.9.4 USING the Data Table Access Module, START the Jet Pump. ☐

5.9.5 VERIFY Jet Pump operation at the Operator Control Station. ☐

5.9.6 PLACE the JR-1 Valve, on the Jet Pump jumper, in the FLUSH position. ☐

5.9.7 VERIFY the following:

- Jet Pump IMMEDIATELY shuts down. ☐
- "JR-1 NON-PROCESS" is displayed at Data Table Access Module AND "NOT PROCESS" is displayed operator control Station. ☐
- "Jet Pump SHUTDOWN" is displayed at Data Table Access Module and Operator Control Station. ☐

NOTE - "Flush Pressure HI" may be received.

5.9.8 VERIFY the Jet Pump can not be re-started with the JR-1 valve in the FLUSH position. ☐

5.9 JET PUMP VALVING INTERLOCK FOR THE JET PUMP (Cont.)

5.9.9 PLACE the JR-1 Valve in the PROCESS position. ☐

Test exception #21

5.9.10 ENSURE all alarms have been acknowledged at the Data Table Access Module and Operator Control Station. ☐

5.9.11 RESTART the Jet Pump using the Data Table Access Module. ☐

5.9.12 VERIFY Jet Pump operation at the Operator Control Station. ☐

5.9.13 PLACE the JR-1 Valve in the PRIME position. ☐

X exception

5.9.14 VERIFY the following:

- Jet Pump IMMEDIATELY shuts down. ☐
- "JR-1 NON-PROCESS" is displayed at Data Table Access Module AND Operator Control Station (ALARM *5). ☐
- "Jet Pump SHUTDOWN" is displayed at Data Table Access Module and Operator Control Station (ALARM *12). ☐

NOTE - "FLUSH Pressure HI" may be received.

5.9.15 VERIFY the Jet Pump can not be re-started with the JR-1 valve in the PRIME position. ☐

5.9.16 ENSURE all alarms have been acknowledged at the Data Table Access Module and Operator Control Station. ☐

5.9 JET PUMP VALVING INTERLOCK FOR THE JET PUMP (Cont.)

Test Exception #1

5.9.17 **REMOVE** any jumpers or forces NOT required for the next test section. ☐

5.9.18 Test Director **VERIFY** that section 5.9 is complete by **SIGNING** below.

Test Director Signature _____ Date _____

5.9.19 Quality Control Inspector **VERIFY** that section 5.9 is complete by signing below.

Quality Control Inspector Signature _____ Date _____

Test exception #1

5.10 OPERATOR CONTROL STATION JET PUMP SHUTDOWN TEST

Test Exception #21

5.10.1 **PLACE** the Jet Pump JR-1 valve in the PROCESS position. ☐

5.10.2 **ENSURE** Pump recirculation apparatus is filled with water **AND** configured to circulate water through the saltwell Jet Pump. ☐

5.10.3 **ENSURE** no interlocks are present that will prevent pump operation. ☐

- At the discretion of the Test Director, jumper or force interlocks if necessary.

5.10.4 Using the Data Table Access Module, **START** the Jet Pump. ☐

5.10.5 **VERIFY** Jet Pump operation at the Operator Control Station. ☐

5.10.6 Using the Operator Control Station, **SHUT DOWN** the Jet Pump. ☐

5.10.7 **VERIFY** the JET PUMP SHUTDOWN alarm at the Operator Control Station. ☐

5.10.8 Test Director **VERIFY** that section 5.10 is complete by **SIGNING** below.

_____ _____
Test Director Signature Date

5.10.9 Quality Control Inspector **VERIFY** that section 5.10 is complete by signing below.

_____ _____
Quality Control Inspector Signature Date

5.11 LEAK DETECTION INTERLOCK CHECK

5.11.1 Cognizant Engineer shall LIST all relevant leak detectors in pump pit, valve pits, clean out boxes, and encasements along transfer route in the table below. Any unused lines in the table shall be marked with an "N/A".

NOTE - Leak Detector Interlock checks can be performed in any sequence.

- Operator Control Station wording of alarms may be different than Data Table Access Module, but must have the same general meaning.

- Pump operation will be simulated during the remainder of the OTP.

5.11.2 VERIFY current functional check, AND RECORD the due date on the table below.

NOTE - Leak detectors not associated with the skid being tested shall be marked as "N/A".

INSTRUMENT	FUNCTIONAL CHECK DATE	NEXT DUE DATE
1) Primary Leak Detector	9-22-99	12/99
2) Leak Detector 1	9-22-99	12-99
3) SALW-LDE U-B	9-22-99	12-99
4) SALW-LDE-COB-U 33	9-22-99	12-99
5) SALW-LDE-U-D	9-22-99	12-99
6) SALW-LDE-COB 30	9-22-99	12-99
7) SALW-LDE-S-A	9-20-99	12-99
8) SALW-LDE-SY 02A	9-20-99	12-99
9) SALW-LDE-S-B	9-20-99	12-99
10)		
11)		
12)		
13)		
14)		
15)		

5.11 LEAK DETECTION INTERLOCK CHECK (Cont.)

NOTE - 242-A Evaporator Operator only needs to be notified for East Area transfers.

5.11.3 IF required, NOTIFY the Tank Monitoring and Control System Operator, 242-A Evaporator Operator and Shift Manager that this section is about to commence.

NA ☐

5.11.4 REQUEST Test Director to VERIFY that field installation of the Saltwell equipment per applicable work package is completed for testing. — All equipment necessary to perform section 5.11 is complete

NOTE - For EMERGENCY PUMPING SKID, or testing of skid prior to field installation, Test Director shall "NA" the work package number line and sign and date where requested.

Enter work package number WS-99-00146

Test Director Signature _____ Date 9/24/99

5.11 LEAK DETECTION INTERLOCK CHECK (Cont.)

5.11.5 CHECK the leak detector interlocks corresponding to the leak detectors entered in the previous Table by the Cognizant Engineer by PERFORMING step 5.11.5.1 through step 5.11.5.11 AND CHECKING the appropriate space when complete:

LEAK DETECTOR	CHECK COMPLETE (✓)
1) Primary Leak Detector	✓
2) Leak Detector 1	✓
3) SALW-LDE-~~60~~U-B	✓
4) SALW-LDE - COB 33	✓
5) SALW-LDE - UD	✓
6) SALW-LDE - COB 30	✓
7) SALW-LDE - ~~SA~~ SYB 9/25/99	FAIL
8) SALW-LDE - SY 02 A	FAIL
9) SALW-LDE - ~~ST~~ SYB 9/25/99	FAIL
10)	
11)	
12)	
13)	
14)	
15)	

Test except #1

5.11.5.1 IF REQUIRED, ENSURE the Pump Instrument and Control Skid is configured and ready to receive leak detector signal. ☑

5.11.5.2 MONITOR the status of the Pump Starter to VERIFY pump status. ☑

5.11.5.3 IF test is to be performed after pump installation, ENSURE Jet Pump motor leads have been determinated from the load side of the starter while performing this section. ☑

5.11 LEAK DETECTION INTERLOCK CHECK (Cont.)

5.11.5.4 ENSURE no interlocks are present that will prevent pump operation.

- At the discretion of the Test Director, force or jumper unused interlocks.

5.11.5.5 Using Data Table Access Module, START the Jet Pump.

NOTE - Programmer may need to force limit switches and pressure switches to simulate recirculate flow.

5.11.5.6 VERIFY Jet Pump start at Operator Control Station.

5.11 LEAK DETECTION INTERLOCK CHECK (Cont.)

WARNING

Energized circuits and leads are contained inside the cabinet. Observe appropriate electrical. Comply with WHC-CM-1-10, WKS-15, ELECTRICAL WORK SAFETY to avoid personnel electrical shock hazards.

5.11.5.7 **TEST** leak detector using Leak Detector Test Circuit **OR** jumper, or by emerging probe, as required. **VERIFY** and **ACKNOWLEDGE** the following:

- IMMEDIATE Jet Pump shutdown.
- "JET PUMP SHUTDOWN" is annunciating at the Data Table Access Module (ALARM #12).
- A Leak Detection Alarm is annunciating at the Data Table Access Module AND at the Operator Control Station. ☑

5.11.5.8 **ACKNOWLEDGE** the Leak Detector Alarm at the Operator Control Station. ☑

5.11.5.9 **ACKNOWLEDGE** the Leak Detector Alarm at the Data Table Access Module. ☑

5.11.5.10 **VERIFY** that the Jet Pump **CAN NOT** be re-started at the Data Table Access Module when the alarm is ACTIVE. ☑

5.11.5.11 **RETURN** the leak detector to a condition of operation by **PERFORMING** the following:

- IF a jumper was installed in step 5.11.5.7, **REMOVE** jumper.
- **VERIFY** the Leak Detection Alarm at the Data Table Access Module and Operator Control Station resets.
- **RESET** the remote Master Pump Shutdown if required. ☑

5.11 LEAK DETECTION INTERLOCK CHECK (Cont.) Master Pump Shutdown

NOTE - Steps 5.11.6 through 5.11.15 only need to be performed if remote Master Pump Shutdown exists. does not exist

N/A

5.11.6 RESTART the Jet Pump using Data Table Access Module. ☐

5.11.7 SHUTDOWN the Jet Pump using the manual Master Pump Shutdown. ☐

5.11.8 VERIFY that the Jet Pump stops AND the Leak Detection Alarm appears. ☐

5.11.9 ACKNOWLEDGE alarms at the Data Table Access Module and Operator Control Station. ☐

5.11.10 RESET the Master Pump Shutdown. ☐

5.11.11 RESTART the Jet Pump using the Data Table Access Module. ☐

5.11.12 SHUTDOWN the Jet Pump using the manual Master Pump Shutdown at a second location (if it exists). ☐

5.11.13 VERIFY that the Jet Pump stops AND Leak Detection Alarm appears. ☐

5.11.14 RESET the Master Pump Shutdown. ☐

5.11.15 ACKNOWLEDGE alarms at the Data Table Access Module and Operator Control Station. ☐

N/A

5.11 LEAK DETECTION INTERLOCK CHECK (Cont.)

INTERLOCK TEST

NOTE - It is the intent of this section to test all transfer system and FGM interlocks not previously tested in the leak detector section. Included would be DCRT high level alarms, dilution tank low level alarms, FGM alarms, and leak detection not previously tested. Also included would be encasement and receiver tank pressurization alarms.

The Cognizant Engineer is responsible for reviewing the installation design and identifying all appropriate interlocks to be tested.

5.11.16 Cognizant Engineer shall ENTER all interlocks (by relay or device designation) not tested by a separate section in the Table below.

RELAY/DEVICE DESIGNATION	JET PUMP SHUTDOWN (✓)	ALARM MESSAGE RECEIVED
1) FGM Interlock	✓	DTAM FGM HIGH - SHUTDOWN OCS FGM HIGH - SHUT DOWN
2) WRZ Dilution tank level	✓	DTAM OCS
3) Dilution tank flow -	✓	DTAM DILUTION TANK NO FLOW / PUMP SHUTDOWN OCS DILUTION LOW / PUMP SHUTDOWN
4) HCS SKID FLOW.		DTAM OCS
5) Pump Running - metering pump contactor energized -	NA	~~DTAM~~ pump on / contactor closed ~~OCS~~ pump on
6) pump off metering pump contactor de energized	✓	~~DTAM~~ pump shutdown off / contactor open ~~OCS~~ pump off
7)		DTAM OCS

5.11 LEAK DETECTION INTERLOCK CHECK (Cont.)

WARNING

Energized circuits and leads are contained inside the cabinet. Observe appropriate electrical. Comply with WHC-CM-1-10, WKS-15, ELECTRICAL WORK SAFETY to avoid personnel electrical shock hazards.

5.11.17 **NOTIFY** Tank Monitoring and Control System Operator, 242-A Evaporator Operator (if transfer is in east Area), and Shift Manager that this section is about to begin.

5.11.18 For each relay listed in the Table above, **PERFORM** the following:

5.11.18.1 Using the Data Table Access Module, **START** the Jet Pump, AND **OBSERVE** that the pump run light is ON.

5.11.18.2 **DEACTIVATE** the relay to simulate an alarm condition.

NOTE - Craft will determine a safe method of deactivating each device. Test pushbuttons, mock input signals, shorting across secondary of induction relay coils, lifting coil leads, or pulling device from socket may be used.

5.11.18.3 **VERIFY** Data Table Access Module and Operator Control Station display "JET PUMP SHUTDOWN" **AND** an interlock message.

5.11.18.4 **RECORD** a check mark in the Table if Jet Pump shutdown occurs.

5.11.18.5 **RECORD** the interlock alarm messages received at Data Table Access Module and Operator Control Station in the Table.

5.11.18.6 **VERIFY** that the Jet Pump CAN NOT be re-started at the Data Table Access Module when the alarm is ACTIVE.

5.11.18.7 **RESTORE** the circuit (remove simulated alarm condition).

5.11.18.8 **ACKNOWLEDGE** the alarms at Data Table Access Module and Operator Control Station.

5.11 LEAK DETECTION INTERLOCK CHECK (Cont.)

5.11.19 **NOTIFY** Tank Monitoring and Control System Operator, 242-A Evaporator Operator (if transfer is in east Area), and Shift Manager that this section is complete. ☑ N/A

5.11.20 **REMOVE** any jumpers or forces NOT required for the next test section. ☑

5.11.21 Test Director **VERIFY** that section 5.11 is complete by **SIGNING** below.

Test Director Signature _____ Date 9/24/99

5.11.22 Quality Control Inspector **VERIFY** that section 5.11 is complete by signing below.

* Quality Control Inspector Signature _____ Date 9/24/99

* SEE EXCEPTION #2 KW 9/24/99

5.12 SHUTDOWN CIRCUITRY CHECK

NOTE - This section will only be performed at Tanks requiring a shutdown circuit.

N/A

5.12.1 At the discretion of the Test Director, **ENSURE** temporary interlock jumpers, OR software forces are in place for uninstalled equipment. ☐

5.12.2 **PRESS** the SEISMIC RESET PB-1 push-button (located on the SAFETY CLASS CONTROL CABINET (B)). ☐

5.12.3 **ENSURE** the POWER AVAIL BLUE indicating light (located on the SAFETY CLASS CONTROL CABINET (B)) is illuminated. ☐

5.12.4 **IF** FGM, Exhauster or Dome Pressure transmitters are NOT in service, **PLACE** jumpers across FGM1-1 and VENT-2 on TB-1 of SAFETY CLASS CONTROL CABINET (A) **AND** across terminal 7 and 9 of dome pressure alarm module. ☐

5.12.5 **PRESS** the PANEL RESET PB-2 push-button (located on the SAFETY CLASS CONTROL CABINET (A)). N/A ☐

5.12.6 **ENSURE** the TRIP CKT FUNCTIONAL GREEN indicating light (located on the SAFETY CLASS CONTROL CABINET (B)) is illuminated. ☐

SEISMIC SWITCH TEST

5.12.7 **SIMULATE** an earthquake alarm condition at the panel containing SAFETY CLASS CONTROL CABINET (A) and SAFETY CLASS CONTROL CABINET (B) per Test Director instructions. ☐

5.12.8 **VERIFY** that the HT-1-1 contactor (located in cabinet "SAFETY CLASS HEAT TRACE CONTACTOR HT-1") is OPEN. ☐

5.12 SHUTDOWN CIRCUITRY CHECK (Cont.)

5.12.9 VERIFY that the PMP-1-1 contactor (located in cabinet "SAFETY CLASS PUMP CONTACTOR PMP-1") is OPEN. ☐

5.12.10 VERIFY that the HT-2-1 contactor (located in cabinet "SAFETY CLASS HEAT TRACE CONTACTOR HT-2") is OPEN. ☐

5.12.11 VERIFY that the PMP-2-1 contactor (located in cabinet "SAFETY CLASS PUMP CONTACTOR PMP-2") is OPEN. ☐

5.12.12 VERIFY that the "SEISMIC SWITCH" alarm is activated on the Data Table Access Module (ALARM #27) ☐

5.12.13 PRESS the SEISMIC RESET PB-1 push-button (located on the SAFETY CLASS CONTROL CABINET (B)). ☐

5.12.14 PRESS the PANEL RESET PB-2 push-button (located on the SAFETY CLASS CONTROL CABINET (A)). ☐

5.12.15 VERIFY the TRIP CKT FUNCTIONAL GREEN indicating light (located on the SAFETY CLASS CONTROL CABINET (B)) is illuminated. ☐

DOME PRESSURE TEST

NOTE - This section will only be performed at Tanks requiring a dome pressure transmitter.

5.12.16 NOTIFY Shift Manager that Tank Pressure Transmitter will be out of service. ☐

5.12.17 REMOVE jumper across terminal 7 and 9 of Dome Pressure Alarm Module of SAFETY CLASS CONTROL CABINET A. ☐

5.12 SHUTDOWN CIRCUITRY CHECK (Cont.)

5.12.18 **PRESS** the PANEL RESET PB-2 push-button (located on the SAFETY CLASS CONTROL CABINET (A)). ☐

5.12.19 **ENSURE** the TRIP CKT FUNCTIONAL GREEN indicating light (located on the SAFETY CLASS CONTROL CABINET (B)) is illuminated. ☐

5.12.20 **VERIFY** WST-PT-6001 Dome Pressure Transmitter is energized. ☐

5.12.21 **VALVE OUT** WST-PT-6001 and **ISOLATE** from tank space. ☐

5.12.22 **CONNECT** a manometer to the WST-PT-6001 Dome Pressure transmitter. ☐

5.12.23 **SLOWLY RAISE** manometer pressure from 0" Water Gauge to 2" Water Gauge. ☐

5.12.24 **RECORD** the manometer reading when the shutdown circuit TRIPS.

MANOMETER READING (Inches Water Gauge)	

5.12.25 **VERIFY** the shutdown circuit trips within a range of 1.4 to 1.6 inches Water Gauge. ☐

5.12.26 **VERIFY** that from the time that SALW-PSHL-821* trips, to the time that PMP-1-1 and PMP-2-1 OPEN, is LESS THAN 10 seconds. ☐

5.12.27 **VERIFY** the TRIP CKT FUNCTIONAL GREEN indicating light (located on the SAFETY CLASS CONTROL CABINET (B)) is NOT illuminated. ☐

5.12 SHUTDOWN CIRCUITRY CHECK (Cont.)

5.12.28 **VERIFY** that the HT-1-1 contactor (located in cabinet "SAFETY CLASS HEAT TRACE CONTACTOR HT-1") is OPEN. ☐

5.12.29 **VERIFY** that the PMP-1-1 contactor (located in cabinet "SAFETY CLASS PUMP CONTACTOR PMP-1") is OPEN. ☐

5.12.30 **VERIFY** that the HT-2-1 contactor (located in cabinet "SAFETY CLASS HEAT TRACE CONTACTOR HT-2") is OPEN. ☐

5.12.31 **VERIFY** that the PMP-2-1 contactor (located in cabinet "SAFETY CLASS PUMP CONTACTOR PMP-2") is OPEN. ☐

5.12.32 **VERIFY** that the Data Table Access Module displays "DOME PRESSURE HIGH" (ALARM #28). ☐

5.12.33 **VERIFY** that the Operator Control Station displays "DOME PRESSURE HIGH". ☐

5.12.34 **ACKNOWLEDGE** the Operator Control Station and Data Table Access Module alarm condition. ☐

5.12.35 **VERIFY** that the Jet Pump is not able to be re-started. ☐

5.12.36 **SET** WST-PT-6001 Dome Pressure manometer to 0 inches Water Gauge. ☐

5.12.37 **PRESS** the PANEL RESET PB-2 push-button (located on the SAFETY CLASS CONTROL CABINET (A)). ☐

5.12 SHUTDOWN CIRCUITRY CHECK (Cont.)

5.12.38 **VERIFY** the TRIP CKT FUNCTIONAL GREEN indicating light (located on the SAFETY CLASS CONTROL CABINET (B)) is illuminated. ☐

5.12.39 **VERIFY** that the Jet Pump heat trace contactors (located at the Safety Shutdown Circuit) are CLOSED. ☐

5.12.40 **RE-START** the Jet Pump at the Data Table Access Module. ☐

5.12.41 **SET** WST-PT-6001 Dome Pressure manometer to -3.5 inches Water Gauge. ☐

5.12.42 **VERIFY** the TRIP CKT FUNCTIONAL GREEN indicating light (located on the SAFETY CLASS CONTROL CABINET (B)) is illuminated. ☐

5.12.43 **VERIFY** that the Jet Pump heat trace contactors (located at the Safety Shutdown Circuit) are CLOSED. ☐

5.12.44 **VERIFY** that the Jet Pump run light is ON. ☐

5.12.45 **VERIFY** that the Data Table Access Module displays "DOME PRESSURE LOW" (ALARM #29). ☐

5.12.46 **VERIFY** that the Operator Control Station displays "DOME PRESSURE LOW" ☐

5.12.47 **ACKNOWLEDGE** the Operator Control Station and Data Table Access Module alarm condition. ☐

5.12 SHUTDOWN CIRCUITRY CHECK (Cont.)

5.12.48 SET WST-PT-6001 Dome Pressure manometer to 0 inches Water Gauge. ☐

5.12.49 DISCONNECT the manometer from the WST-PT-6001 Dome Pressure transmitter. ☐

5.12.50 VALVE WST-PT-6001 back to service. ☐

5.12.51 DE-ENERGIZE the WST-PT-6001* Dome Pressure transmitter. ☐

5.12.52 VERIFY the TRIP CKT FUNCTIONAL GREEN indicating light (located on the SAFETY CLASS CONTROL CABINET (B)) is NOT illuminated. ☐

N/A

5.12.53 VERIFY that the HT-1-1 contactor (located in cabinet "SAFETY CLASS HEAT TRACE CONTACTOR HT-1") is OPEN. ☐

5.12.54 VERIFY that the PMP-1-1 contactor (located in cabinet "SAFETY CLASS PUMP CONTACTOR PMP-1") is OPEN. ☐

5.12.55 VERIFY that the HT-2-1 contactor (located in cabinet "SAFETY CLASS HEAT TRACE CONTACTOR HT-2") is OPEN. ☐

5.12.56 VERIFY that the PMP-2-1 contactor (located in cabinet "SAFETY CLASS PUMP CONTACTOR PMP-2") is OPEN. ☐

5.12.57 VERIFY that the Data Table Access Module displays "DOME PRESSURE FAIL" (Alarm #24). ☐

5.12 SHUTDOWN CIRCUITRY CHECK (Cont.)

5.12.58 **VERIFY** that the Operator Control Station displays "DOME PRESSURE FAIL". ☐

5.12.59 **ACKNOWLEDGE** the Operator Control Station and Data Table Access Module alarm condition. ☐

5.12.60 **VERIFY** that the Jet Pump can NOT be re-started at the Data Table Access Module. ☐

5.12.61 **ENERGIZE** the WST-PT-6001 Dome Pressure transmitter. ☐

5.12.62 **VERIFY** no Data Table Access Module alarms are present with the EXCEPTION of alarms 12 and ~~13~~ condition. ☐

5.12.63 IF they were installed, **REMOVE** jumpers across FGM-1 and VENT-2 on TB-1 of SAFETY CLASS CONTROL CABINET (A). ☐

EXHAUSTER INTERFACE

5.12.64 **REQUEST** Test Director to **VERIFY** exhauster interface to the Safe Shutdown Circuit has been installed and that the exhauster Operational Test Procedure has verified this circuit is Operable.

_____ _____
Test Director Signature Date

5.12.65 **NOTIFY** the Tank Monitoring and Control System Operator that the section is about to commence. ☐

5.12.66 IF required, **PLACE JUMPER** across FGM1-2 and FGM1-1 on TB-1 of SAFETY CLASS CONTROL CABINET (A). ☐

5.12 SHUTDOWN CIRCUITRY CHECK (Cont.)

5.12.67 PLACE jumper across terminal 7 and 9 of Dome Pressure Alarm Module. ☐

5.12.68 At the discretion of the Test Director, ENSURE temporary interlock jumpers, OR software forces are in place for uninstalled equipment. ☐

5.12.69 VERIFY the Safe Shutdown Circuit is reset and ready for normal operation. ☐

5.12.70 ENSURE exhauster is running per procedure TO-060-085. ☐

5.12.71 START the Jet Pump using the Data Table Access Module. ☐

5.12.72 TRIP the Exhauster. N/A ☐

5.12.73 VERIFY the Jet Pump shuts down within 10 seconds after tripping the exhauster. ☐

5.12.74 NOTIFY Tank Monitoring and Control System Operator of exhauster shutdown. ☐

5.12.75 VERIFY the TRIP CKT FUNCTIONAL GREEN indicating light (located on the SAFETY CLASS CONTROL CABINET (B)) is NOT illuminated. ☐

5.12.76 VERIFY that the HT-1-1 contactor (located in cabinet "SAFETY CLASS HEAT TRACE CONTACTOR HT-1") is OPEN. ☐

5.12.77 VERIFY that the PMP-1-1 contactor (located in cabinet "SAFETY CLASS PUMP CONTACTOR PMP-1") is OPEN. ☐

5.12 SHUTDOWN CIRCUITRY CHECK (Cont.)

5.12.78 **VERIFY** that the HT-2-1 contactor (located in cabinet "SAFETY CLASS HEAT TRACE CONTACTOR HT-2") is OPEN. ☐

5.12.79 **VERIFY** that the PMP-2-1 contactor (located in cabinet "SAFETY CLASS PUMP CONTACTOR PMP-2") is OPEN. ☐

5.12.80 **VERIFY** that the Data Table Access Module displays "SSC TRIP" (Alarm #18). ☐

5.12.81 **VERIFY** that the Operator Control Station displays "EXHAUSTER SHUTDOWN" **AND** "SSC TRIP". ☐

5.12.82 **ACKNOWLEDGE** the Operator Control Station and Data Table Access Module alarm condition. N/A ☐

5.12.83 **VERIFY** that the Jet Pump can NOT be re-started at the Data Table Access Module. ☐

5.12.84 **NOTIFY** Tank Monitoring and Control System Operator of exhauster restart. ☐

5.12.85 **RESTART** the Exhauster per procedure TO-060-085. ☐

5.12.86 **PRESS** the PANEL RESET PB-2 push-button (located on the SAFETY CLASS CONTROL CABINET (A)). ☐

5.12.87 **VERIFY** the TRIP CKT FUNCTIONAL GREEN indicating light (located on the SAFETY CLASS CONTROL CABINET (B)) is illuminated. ☐

5.12 SHUTDOWN CIRCUITRY CHECK (Cont.)

5.12.88 REMOVE jumper across FGM1-1 and FGM1-2 on TB-1. ☐

5.12.89 REMOVE jumper across terminal 7 and 9 of Dome Pressure Alarm Module in SAFETY CLASS CONTROL CABINET (A). ☐

FLAMMABLE GAS MONITOR

5.12.90 REQUEST Test Director to VERIFY Flammable Gas Monitor interface to the Safe Shutdown Circuit has been installed and that the Flammable Gas Monitor Operational Test Procedure has verified this circuit is Operable.

_____ _____
Test Director Signature Date

5.12.91 PLACE JUMPER across VENT-1 and VENT-2 on TB-1 of SAFETY CLASS CONTROL CABINET (A). N/A ☐

5.12.92 IF required, PLACE jumper across terminal 7 and 9 of Dome Pressure Alarm Module. ☐

5.12.93 ENSURE the Safety Shutdown Circuit is reset and ready for normal operation. ☐

5.12.94 RESTART the Jet Pump using the Data Table Access Module. ☐

5.12.95 INITIATE a Flammable Gas trip in the Flammable Gas Monitor Per Test Director. ☐

5.12.96 VERIFY the Jet Pump shuts down within 10 seconds after tripping the flammable gas. ☐

5.12.97 VERIFY the TRIP CKT FUNCTIONAL GREEN indicating light (located on the SAFETY CLASS CONTROL CABINET (B)) is NOT illuminated. ☐

5.12 SHUTDOWN CIRCUITRY CHECK (Cont.)

5.12.98 **VERIFY** that the HT-1-1 contactor (located in cabinet "SAFETY CLASS HEAT TRACE CONTACTOR HT-1") is OPEN. ☐

5.12.99 **VERIFY** that the PMP-1-1 contactor (located in cabinet "SAFETY CLASS PUMP CONTACTOR PMP-1") is OPEN. ☐

5.12.100 **VERIFY** that the HT-2-1 contactor (located in cabinet "SAFETY CLASS HEAT TRACE CONTACTOR HT-2") is OPEN. ☐

5.12.101 **VERIFY** that the PMP-2-1 contactor (located in cabinet "SAFETY CLASS PUMP CONTACTOR PMP-2") is OPEN. N/A ☐

5.12.102 **VERIFY** that the Data Table Access Module displays "SSC TRIP". ☐

5.12.103 **VERIFY** that the Operator Control Station displays "FLAMMABLE GAS MONITOR TRIP" **AND** "SSC TRIP". ☐

5.12.104 **VERIFY** Jet Pump is shutdown. ☐

5.12.105 **REMOVE** jumper across VENT-1 and VENT-2 on TB-1 of SAFETY CLASS CONTROL CABINET (A). ☐

5.12.106 **REMOVE JUMPER** across terminal 7 and 9 of Dome Pressure Module, if previously installed. ☐

5.12 SHUTDOWN CIRCUITRY CHECK (Cont.)

5.12.107 **REMOVE** any jumpers or forces NOT required for the next test section. ☐

5.12.108 Test Director **VERIFY** that section 5.12 is complete by **SIGNING** below.

_____ _____
Test Director Signature Date

5.12.109 Quality Control Inspector **VERIFY** that section 5.12 is complete by signing below.

_____ _____
Quality Control Inspector Signature Date

5.13 SOFTWARE DOCUMENTATION

5.13.1 **REQUEST** Engineering to **PRINT** out a Ladder Logic and Alarm Table for the Pump Instrumentation and Control Skid **AND ATTACH** it to this procedure.

☑

5.13.2 Test Director **VERIFY** that section 5.13 is complete by **SIGNING** below.

Test Director Signature _____ Date 9-24-99

5.13.3 Quality Control Inspector **VERIFY** that section 5.13 is complete by signing below.

Quality Control Inspector Signature _____ Date 9/24/99

OPERATIONAL TEST PROCEDURE EXCEPTION LOG

This page may be reproduced as necessary PAGE _____ of _____

OPERATIONAL TEST PROCEDURE EXCEPTION LOG		
Number	Date	Description
1	9/24/99	only prerequisites necessary to perform steps 5.1, 5.2, 5.11 and 5.13 completed SEE HNF-4277
~~2~~	~~9/24/99~~	ONLY performed 5.1, 5.2, 5.11, ~~5.15~~ 5.15
2	9/24/99	Section 5.11. SY 02A SA SB leak detectors did not shut down WD pump. ALARMS @ 2425
3	9/24/99	Section 4.2.12 - All necessary ECNs to operate pump (simulated) have been completed. All applicable ECNs will be issued off work complete at completion of this test.
4	9/24/99	5.1.11 - SAG WTF reading not reading properly DP tubes connected ~~properly~~.

OPERATIONAL TEST PROCEDURE EXCEPTION RECORD

This page may be reproduced as necessary.

OTP step number: VARIOUS	OTP Exception Log Number /
Description of Exception: Only portions of prerequisites applicable to section 5.1, 5.2 and 5.11 and 5.13. Completed sections 5.1, 5.2 5.11 and 5.13. Sections 5.3 ~~and~~ thru 5.10 were not completed.	
Resolution of Exception: Section 5.3 thru 5.10 of the OTP were not performed. These sections were performed. These sections were performed in their entirety in PIC SK10 "K" ATP HNF-4277 All exceptions to the ATP specified in HNF-4277 were satisfactorily resolved.	
Date of Resolution:	9/24/99
Test Director signature:	
Cognizant Engineer signature:	
Quality Assurance signature:	9/24/99
Tank Farm Operations signature:	9/25/99

OPERATIONAL TEST PROCEDURE EXCEPTION RECORD

This page may be reproduced as necessary.

OTP step number: Section 5.11	OTP Exception Log Number 2
Description of Exception: The following leak detectors failed the OTP test; SY 02A pump pit, and SA/SB valve pits. The OTP requires the leak detector to shut down the U 103 PIC SKID. There is no DATA communication between S/SY and U FARM.	
Resolution of Exception: Accept As is: The leak detector functions properly. (ie. detects a leak), however the condition is not sensed by U 103 PIC SKID. Until this condition is resolved and the SY/S FARM leak detector interlocks shut down U 103, an operator will be STATIONED in S/SY FARM to notify U FARM operator of a leak condition in 02A, SA, and SB valve pits. This will allow the operator to take the appropriate action. Reference operating procedure TO-505-103	
Date of Resolution:	9/24/99
Test Director signature:	[signature]
Cognizant Engineer signature:	[signature] 9/24/99
Quality Assurance signature:	[signature] 9/24/99
Tank Farm Operations signature:	[signature] 9/25/99

OPERATIONAL TEST PROCEDURE EXCEPTION RECORD

This page may be reproduced as necessary.

OTP step number: 4.2.12	OTP Exception Log Number 3

Description of Exception: All applicable ECNs to operate the pump were not signed off work complete. All work to operate pump (simulated) was complete. The Heat trace work was not complete. ~~ECNs will be signed~~

Resolution of Exception: ECNs will be signed off work complete at completion of OTP.

Date of Resolution:	9/24/99
Test Director signature:	[signature]
Cognizant Engineer signature:	[signature] 9/24/99
Quality Assurance signature:	[signature] 9/24/99
Tank Farm Operations signature:	[signature] 9/25/99

OPERATIONAL TEST PROCEDURE EXCEPTION RECORD

This page may be reproduced as necessary.

OTP step number: 5.1.11.1, 2, 3	OTP Exception Log Number 4
Description of Exception: weight factor was reading 24%, SPG was less than zero. Test designed to measure this parameter without D.P tubes connected.	
Resolution of Exception: disconnected D.P tubes parameters read properly - reconnected D.P tubes.	
Date of Resolution:	9/24/99
Test Director signature:	[signature]
Cognizant Engineer signature:	[signature] 9/24/99
Quality Assurance signature:	[signature] 9/24/99
Tank Farm Operations signature:	[signature] 9/25/99

PROCEDURE PERFORMER SIGNATURE SHEET

All personnel who will be performing, initialing and signing the procedure shall enter their printed name, signature and initials below.

NAME (PRINT)	SIGNATURE	INITIALS
KEN WILLOUGHBY		KW
ZEUROFF, W. F.		WFZ
Daniel Garza		DG
Chad Whiting		CDW
JESUS PEREZ		JP
NGUYEN T.H.		TN
MN Johnson		MNJ
DJ SAUERESSIG		DJS
M R KOCH		MRK

OPERATIONAL TEST PROCEDURE ACCEPTANCE RECORD

This Operational Test Procedure has been completed and the results, including red-line changes, exceptions, and exception resolutions, have been reviewed for compliance with the intent of the Purpose (Section 1.0). The test results are accepted by the undersigned:

	W.T. ZUROFF	9/24/99
Cognizant Engineer (Signature)	(Print Name)	Date
	M R Kocit	9/27/99
Engineering Manager (Signature)	(Print Name)	Date
	Mark Johnson	9-25-99
Tank Farm Operations (Signature)	(Print Name)	Date
L. MARQUARDT per telcon 9/25/99	LAURI MARQUARDT	9/25/99
Safety (Signature)	(Print Name)	Date
KW 9/24/99 T C Volkman per telecon 9/25/99 9:25	W.F. ZUROFF FOR T.L. VOLKMAN	9/25/99
Quality Assurance (Signature)	(Print Name)	Date
	JOHN HAWLOY	9-24-99
Test Director (Signature)	(Print Name)	Date

PROCEDURE HISTORY SIGNATURE SHEET

PCA Incorporated: WTF-97-113

Procedure Signatures for OTP-200-004. R1

USQ Screening Number TF-96-0390

MOD — TYPE OF CHANGE

Q — REVIEW DESIGNATOR

POSITION/ORG	DELEGATE	DATE
NPO	R.L. Sharp	6/25/97
Shift Manager	R. Malhan	6/13/97
QA Engineer	M.C. Tipps	6/25/97
Shift Manager	M.S. Garrett	6/25/97
Cog Engineer	M.R. Koch	6/13/97
Acceptance Review	D.C. Ashworth	6/26/97
Approval Authority	D.J. Sauressig	6/26/97

Pages Affected	Reason for Change	Summary of Change
Step 2.8.1	Revent liberal interpretation of procedure steps.	Reword to specify sections which may be performed out of order.
Various steps	Consistency with procedure standards.	Add Test Director signature and Date line.
Step 5.11.5	Re-pagination of procedure caused reference to be incorrect.	Correct step number reference.
Step 2.8.14	Clarify use for Faac. Group 2 Tanks.	Explain when section 5.12 is performed.
Steps 4.2.7 and 4.2.8	Procedure writer's guide compliance	List specific value and breaker numbers.
Various steps	Clarity	Add tolerance
Step 5.11.4	Traceability for all uses of procedure	Add step to record JCS package number
Page 82	Engineering verification	Add COG Manager signature

PROCEDURE HISTORY SIGNATURE SHEET (Cont.)

PCA Incorporated:

Procedure Signatures for OTP-200-004. R0

USQ Screening Number

NEW	SQ
TYPE OF CHANGE	REVIEW DESIGNATOR

POSITION/ORG	DELEGATE	DATE
NPO	D. Dudley	4/8/97
Shift Manager	D.J. Sauressig	4/7/97
QA Engineer	T.J. Volkman	5/22/97
Safety Engineer	L.S. Krogsrud	5/20/97
Rad. Control Eng.	J. Pieper	5/29/97
Cog Engineer	M.R. Koch	4/7/97
Acceptance Review	D.C. Ashworth	5/29/97
Approval Authority	D.J. Sauressig	5/28/97

Pages Affected	Reason for Change	Summary of Change
All	Engineering Request	New Procedure

PROCEDURE HISTORY SIGNATURE SHEET (Cont.)

PCA Incorporated: WTF-97-178

Procedure Signatures for OTP-200-004. A-2

USQ Screening Number TF-96-0390

MOD — TYPE OF CHANGE

N/A — REVIEW DESIGNATOR

POSITION/ORG	DELEGATE	DATE
NPO	S.A. Ham-Huebner	9/10/97
Eng/Stab	M.R. Koch	9/10/97
Acceptance Review	K.W. Johnson	9/11/97
Approval Authority	D.J. Sauressig	9/11/97

Pages Affected	Reason for Change	Summary of Change
62	Allow for specific package number entry.	Added work package entry line.

PCA Incorporated: WTF-97-184

Procedure Signatures for OTP-200-004. A-2

USQ Screening Number TF-96-583

MOD — TYPE OF CHANGE

Q — REVIEW DESIGNATOR

POSITION/ORG	DELEGATE	DATE
NPO	B.D. Foreman	9/11/97
QE/WTFQA	M.C. Tipps	9/11/97
Mgr/Stab	D.J. Saueressig	9/11/97
Eng/Stab	M.R. Koch	9/11/97
Acceptance Review	K.W. Johnson	9/11/97
Approval Authority	D.J. Sauressig	9/11/97

Pages Affected	Reason for Change	Summary of Change
10	Clarify for field use.	Specified when test equipment is shop only.
12,14	Issuance of Standing Order controls.	Added FGM and intrinsic safety circuit power.
13,61	Some instruments require functional check only	Changed "CALIBR" to "CAL/FUNCTIONAL CHECK"
15	Clear alarms received on power up.	Added alarm acknowledgement on power up.
28	Equipment improvement.	Allowed for use of new flowmeters.
29,36	Repeat of test in field not necessary or practicable.	Qualify section as shop work only. Specify FGM test signal at beginning of loop.
30	Tests entire loop.	
31	Intrinsic safety changes prompted wiring changes.	Correct thermocouple labels.
34,38,42,44,45,48,57,58, 61,64,65	Reviewed OTP against final software alarm messages. Corrected to match.	Correct wording, punctuation, and spelling of alarm windows, and ordering of alarms.

PROCEDURE HISTORY SIGNATURE SHEET (Cont.)

PCA Incorporated: WTF-97-186 — MOD — N/A

Procedure Signatures for OTP-200-004. A-3 — TYPE OF CHANGE — REVIEW DESIGNATOR

USQ Screening Number TF-96-583

POSITION/ORG	DELEGATE	DATE
NPO/Stab	B. Foreman	9/15/97
SOM/WTFO	Del Scott	9/16/97
Eng/Stab	T.H. Nguyen	9/15/97
Eng/Stab	M.R. Koch	9/15/97
Acceptance Review	K.W. Johnson	9/17/97
Approval Authority	D.J. Sauressig	9/15/97

Pages Affected	Reason for Change	Summary of Change
12 (4.2.7)	Ensure closed configuration at start of OTP.	Added valves to checklist.
18 (5.1.10.1)	Correct to match field.	Change LT to WFT.
20 (5.2.3-5.2.5)	Regulator fluctuates with flow and may need to be readjusted.	Changed order of steps. Allow regulator to be readjusted after flows established.
30 (5.3.49)	Changed to match field.	Corrected terminal numbers

PCA Incorporated: WTF-97-188 — MOD — N/A

Procedure Signatures for OTP-200-004. A-3 — TYPE OF CHANGE — REVIEW DESIGNATOR

USQ Screening Number TF-96-583

POSITION/ORG	DELEGATE	DATE
NPO/Stab	B. Foreman	9/16/97
Eng/Stab	T.H. Nguyen	9/16/97
Eng/Stab	M.R. Koch	9/16/97
Acceptance Review	K.W. Johnson	9/17/97
Approval Authority	D.J. Sauressig	9/16/97

Pages Affected	Reason for Change	Summary of Change
25 (5.3.21-22)	Allows for field configuration conditions.	Added ENSURE valve positions for instrument transmitters.
27 (5.3.33-34)	Allows for field configuration conditions.	Added ENSURE valve positions for instrument transmitters.
30 (5.3.49)	Clarified step.	Added remove FGM leads.

PROCEDURE HISTORY SIGNATURE SHEET (Cont.)

PCA Incorporated: WTF-97-189

Procedure Signatures for OTP-200-004. A-4

USQ Screening Number TF-96-0583

MOD — TYPE OF CHANGE

N/A — REVIEW DESIGNATOR

POSITION/ORG	DELEGATE	DATE
NPO/Stab	B.A. Foreman	9/17/97
Eng/Stab	T.H. Nguyen	9/17/97
SOM/WTF	M. Garret	9/17/97
Acceptance Review	K.W. Johnson	9/19/97
Approval Authority	D.J. Sauressig	9/18/97

Pages Affected	Reason for Change	Summary of Change
41, 45	Setpoint must be passed to witness change on DOV.	Change 6" to 7".
43	Allowed to exit section correctly.	Added step to shut off pump.
46	Added clarity.	Added tolerance.
54	Generic procedure; correct for use on all skids.	Remove "A"
60	Consistency with LD tests.	Change calibration to functional check.

PROCEDURE HISTORY SIGNATURE SHEET (Cont.)

Current Modification: A-5

USQ Screening Number: TF-96-583

Approval Designator: SQ

PCA Incorporated: WTF-98-0123

POSITION/ORG	DELEGATE	DATE
NPO/STAB	B.D. Foreman	4/17/98
QAE/SST	M.C. Tipps	4/20/98
Safety/SST	L.S. Krogsrud	4/20/98
SOM/WTF	D.W. Strasser	4/20/98
Cognizant Engineer	M.R. Koch	4/20/98
Acceptance Review	K.W. Johnson	4/22/98
Approval Authority	D. Scott	4/21/98

Justification: Updated requirements and references. Made clarifications and corrected omissions.

Summary of Changes:

Corrected canceled references (2.4, 2.5); deleted allowance to perform sections out of order (2.8.2); added step explaining OCS steps during shop OTPs and field installation prerequisites, and relief from notifying CASS and control room for shop tests (2.8.15, 3.4, 5.11); removed thermocouple voltage source (4.1); added previously omitted valves to lineup (4.2.7); deleted leak detector functional sticker check (4.3); clarified switch position (5.1.5); added ENSURE to steps (5.1.10, 5.3, 5.7); added tolerances (5.3, 5.7, 5.8); specified analog signal interface (5.3.49, 5.3.56); allow use of pump to achieve high pressure (5.4, 5.5.15).

PROCEDURE HISTORY SIGNATURE SHEET (Cont.)

Last Full Revision: R0
Release Date: 5/29/97
USQ Screening Number:
Approval Designator: SQ

Current Modification: A-6
USQ Screening Number: TF-96-583 Rev 3
Approval Designator: SQ
PCA Incorporated: WTF-98-0125

POSITION/ORG	DELEGATE	DATE
NPO	S. Ham-Huebner	4/24/98
QAE/SST	M.C. Tipps	4/24/98
Safety	D. Abramson	4/24/98
Team Lead/Stab	M. Johnson	4/23/98
Cognizant Engineer	M.R. Koch T. Nguyen	4/23/98 4/23/98
Acceptance Review	K.W. Johnson	4/27/98
Approval Authority	K.J. Freeman	4/24/98

Justification: Corrections for typographical errors and equipment modifications.

Summary of Changes:

Changed "filed" to "field" (paragraph 2.8.12); added valves to lineup (step 4.2.7); added pressure indicator to calibration verification table (4.3); corrected valve number (5.1.10.3)

PROCEDURE HISTORY SIGNATURE SHEET (Cont.)

Last Full Revision: R0
Release Date: 5/29/97
USQ Screening Number:
Approval Designator: SQ

Current Modification: A-7
USQ Screening Number: TF-98-0836
Approval Designator: SQ
PCA Incorporated: WTF-98-0207

POSITION/ORG	DELEGATE	DATE
NPO	B.D. Foreman	8/20/98
QAE/SST	M.C. Tipps	8/20/98
Safety	L.S. Krogsrud	8/20/98
Stab. Mgr	D.J. Saueressig	8/20/98
Cognizant Engineer	W.F. Zuroff	8/20/98
Acceptance Review	M.F. Wahl	8/22/98
Approval Authority	D.J. Saueressig	8/20/98

Justification: Engineering and Operations request.

Summary of Changes:

Step 2.8.13 - Clarified that Section 5.12 is only applicable to A-101. Step 4.2.3 - Added "Jumper" to jet pump. Page 11 - added new step for verification that valves SALW-V-6035* and -6036* are open. Step 4.3 - added three pressure indicators to the table to ensure the indicators are calibrated prior to performing the OTP. 5.1.10.1 and 5.1.10.2 - reversed order of steps. 5.1.10.3 and 5.1.10.4 - reversed the order of steps. 5.3.9 - changed "range" to 9.5 o 10.5. 5.3.33 and 5.3.34 - reversed the order of steps.

PROCEDURE HISTORY SIGNATURE SHEET (Cont.)

Last Full Revision: A0
Release Date: 5/29/97
USQ Screening Number:
Approval Designator: SQ

Current Modification: A-8
USQ Screening Number: TF-98-0836, Rev. 1
Approval Designator: N/A
PCA Incorporated: WTF-98-0222

POSITION/ORG	DELEGATE	DATE
NPO	T.E. Brighton	9/14/98
Stab. Mgr	D.J. Saueressig	9/14/98
Cognizant Engineer	M.R. Koch	9/14/98
Acceptance Review	S.L. Lindberg	9/15/98
Approval Authority	D.J. Saueressig	9/14/98

Justification: Change ensures the pump assembly is filled with water and primed before starting the pump. The pump was deprimed in the previous procedure section.

Summary of Changes:

pg. 37: Added new step 5.5.4 to include instructions to ensure the pump is primed prior to starting.

PROCEDURE HISTORY SIGNATURE SHEET (Cont.)

Last Full Revision: A-0

Release Date: 5/29/97

USQ Screening Number:

Approval Designator: SQ

Current Modification: A-9

USQ Screening Number: TF-98-0836, Rev. 2

Approval Designator: Q

PCA Incorporated: WTF-98-0274

POSITION/ORG	DELEGATE	DATE
NPO/ISO	B.D. Foreman	12/28/98
QA	T.J. Volkman	1/20/99
Stab. Mgr	D.J. Saueressig	1/20/99
Cognizant Engineer	W.F. Zuroff	1/4/99
Acceptance Review	B.E. Raymond	1/21/99
Approval Authority	D.J. Saueressig	1/21/99

Justification: ISO operations update info.

Summary of Changes:

Page 3, Add PROCEDURE PERFORMER SIGNATURE SHEET and re-number.
Step 2.4.1, Add recirculation flowmeter manual.
Step 2.5.2, Delete Environmental Compliance Manual.
Step 2.8.1, Change director to "Test Director."
Step 2.8.5, Edit to continue different section.
Step 2.8.8, Add "if necessary."
Step 4.1, Add Control and Display Unit.
Step 4.2.11, Add PROCEDURE PERFORMER SIGNATURE SHEET
Note 5.0, Add PROCEDURE PERFORMER SIGNATURE SHEET
Step 5.1.11.1, Add continuity check.
Step 5.1.11.2, Add continuity check.
Step 5.1.11.3, Add continuity check.
Step 5.3.47, Add DTAM column to table.
Step 5.3.63, Edit for thermocouple identifier.
Step 5.3.65, Edit for thermocouple identifier.
Step 5.4.13, Correct pressurizing typo.
Step 5.4.31 - 5.4.43, Add recirculation flowmeter steps.
Step 5.4.44 - 5.4.54, Add recirculation flush pressure transmitter steps.
Step 5.8.6, 5.8.7, 5.8.12, 5.8.13, 5.8.18, 5.8.19, 5.8.25, 5.8.26, Capitalize and bold INITIAL.
Step 5.11.6, Include FGM and dilution tank level.
Add PROCEDURE PERFORMER SIGNATURE SHEET.

PROCEDURE HISTORY SIGNATURE SHEET (Cont.)

Last Full Revision: A-0
Release Date: 5/29/97
USQ Screening Number:
Approval Designator: SQ

Current Modification: A-10
USQ Screening Number: TF-96-0390
Approval Designator: N/A
PCA Incorporated: WTF-99-108

POSITION/ORG	DELEGATE	DATE
NPO	S.R. Davis	2/26/96
Stab. Mgr	D.J. Saueressig	2/26/99
Cognizant Engineer	M.R. Koch	2/26/99
Acceptance Review	B.E. Raymond	3/1/99
Approval Authority	D.J. Saueressig	2/26/99

Justification: Clarification

Summary of Changes:

Note prior to step 5.4.26 and 5.3.43. Added ability to perform test in field.

PROCEDURE HISTORY SIGNATURE SHEET (Cont.)

Last Full Revision: A-0
Release Date: 5/29/97
USQ Screening Number:
Approval Designator: SQ

Current Modification: A-11
USQ Screening Number: TF-98-0207, Rev 0
Approval Designator: Q
PCA Incorporated: WTF-99-128

POSITION/ORG	DELEGATE	DATE
NCO	S.R. Davis	3/11/99
QA	T. Volkman	3/11/99
Stab. Mgr	D.J. Saueressig	3/11/99
Cog Engineer	W.F. Zuroff	3/11/99
Acceptance Review	B.E. Raymond	3/12/99
Approval Authority	Q. Ravencraft	3/11/99

Justification: Engineering Request

Summary of Changes:

Page 38, step 5.4.40, added a 30 second time delay for the required action to occur.

Page 42, step 5.5.8, Added note addressing when gage SALW-PI-6005* is to be read.

Page 45, step 5.5.9, Added DTAM to the action statement.

Page 72, step 5.11.18.6, New step for verification.

PROCEDURE HISTORY SIGNATURE SHEET (Cont.)

Last Full Revision: A-0
Release Date: 5/29/97
USQ Screening Number:
Approval Designator: SQ

Current Modification: A-12
USQ Screening Number: TF-96-0390, Rev 0
Approval Designator: NA
PCA Incorporated: WTF-99-138

POSITION/ORG	DELEGATE	DATE
NCO	D Garza	3/16/99
Stab. Mgr	D.J. Saueressig	3/16/99
Mgr/ISE	MR Koch	3/16/99
Acceptance Review	PF Johnston	3/22/99
Approval Authority	DJ Saueressig	3/16/99

Justification: CASS system removed from service

Summary of Changes:
pages - 66,72,73,80,81,82 - Delete CASS and replace with TMACS

PROCEDURE HISTORY SIGNATURE SHEET (Cont.)

Last Full Revision: A-0
Release Date: 5/29/97
USQ Screening Number:
Approval Designator: SQ

Current Modification: A-13
USQ Screening Number: TF-98-0836, Rev 3
Approval Designator: SQ
PCA Incorporated: WTF-99-198

POSITION/ORG	DELEGATE	DATE
NCO/IS	T.E. Brighton	4/20/99
QA	T.J. Volkman	4/20/99
ENGRII/SAFETY	M. Omar Jaka	4/20/99
Stab. Mgr	D.J. Saueressig	4/21/99
CogEng/ISE	W.F. Zuroff	4/21/99
Acceptance Review	S.E. Bevans	4/21/99
Approval Authority	DJ Saueressig	4/21/99

Justification: Update for model 4.46 FGMs and dome space FGMs.

Summary of Changes:
page 31 - Edit title and steps to include model 4.46 and clarify pit FGMs
page 32 - Add new page for dome space installed FGMs, steps 5.3.57 through 5.3.64

PROCEDURE HISTORY SIGNATURE SHEET (Cont.)

Last Full Revision: A-0
Release Date: 5/29/97
USQ Screening Number:
Approval Designator: SQ

Current Modification: A-14
USQ Screening Number: TF-98-1201, Rev 1
Approval Designator: NA
PCA Incorporated: WTF-99-0218

POSITION/ORG	DELEGATE	DATE
NCO/IS	T.E. Brighton	05/07/99
Stab. Mgr	D.J. Saueressig	05/07/99
CogEng/ISE	W.F. Zuroff	05/07/99
Acceptance Review	S.E. Bevans	05/07/99
Approval Authority	DJ Saueressig	05/07/99

Justification: Engineering request, incorporate PS-2 change.

Summary of Changes:
Page 36 - 5.4.13 Add "or SALW-PI-6014*
- 5.4.15 Capitalize alarm and spell out hi(gh), "FLUSH PRESSURE HIGH"

PROCEDURE HISTORY SIGNATURE SHEET (Cont.)

Last Full Revision: A-0
Release Date: 5/29/97
USQ Screening Number:
Approval Designator: SQ

Current Modification: A-15
USQ Screening Number: TF-98-1201, Rev 1
Approval Designator: NA
PCA Incorporated: WTF-99-0230

POSITION/ORG	DELEGATE	DATE
NCO	Greg Seidel	5/13/99
Stab. Mgr	D.J. Saueressig	5/13/99
SR Eng/I.S.	B.R. Johns	5/13/99
Acceptance Review	L. Ross	5/18/99
Approval Authority	DJ Saueressig	5/13/99

Justification: Correct breaker list and add missing breakers.

Summary of Changes:

Page 12: Added breaker 11 and corrected order of list.

Page 15, step 5.1.2: Corrected order of breaker list.
Added breakers 6, 1, 2 and 12 to list.
Edited breaker descriptions.

LAD 2 - -- Total Rungs in File = 18

0000 N20:17/7 N16:6 OSR 8 — COP: Copy File, Source #N14:0, Dest #N60:4, Length 15

INITIALIZE THERMOCOUPLES
First Pass
0001 S2:1/15 — JSR: Jump To Subroutine, SBR File Number U:3

GATHER INPUTS FROM ALL 12 MODULES
0002 N20:17/7 — JSR: Jump To Subroutine, SBR File Number U:4

CHECKS FOR ALARM CONDITIONS AND SENDS SIGNAL TO DTAM, STROBE, LIGHTS, HORN. MOTOR INTERLOCK CIRCUIT
0003 — JSR: Jump To Subroutine, SBR File Number U:5

INTERLOCK TO OTHER U-FARM TANKS
0004 — JSR: Jump To Subroutine, SBR File Number U:6

PID CONTROL AND COUNT FLOW
0005 — JSR: Jump To Subroutine, SBR File Number U:7

MASTER ACKNOWLEDGE
0006 — JSR: Jump To Subroutine, SBR File Number U:8

HEAT TRACE CONTROL
0007 — JSR: Jump To Subroutine, SBR File Number U:9

DH-485 INPUTS/OUTPUTS
0008 — JSR: Jump To Subroutine, SBR File Number U:12

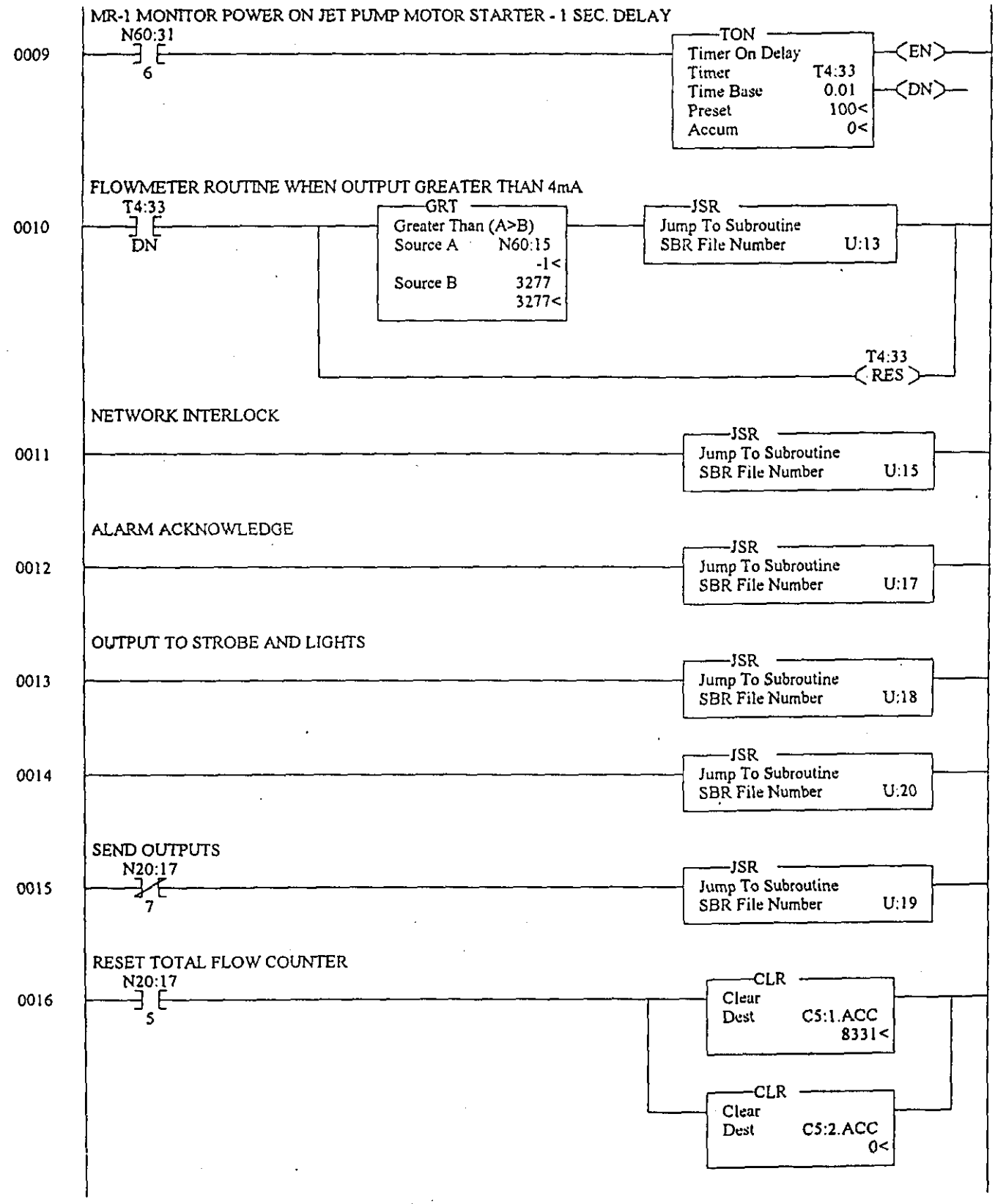
MR-1 MONITOR POWER ON JET PUMP MOTOR STARTER - 1 SEC. DELAY
0009
N60:31
6
TON
Timer On Delay
Timer T4:33
Time Base 0.01
Preset 100<
Accum 0<
EN
DN
FLOWMETER ROUTINE WHEN OUTPUT GREATER THAN 4mA
0010
T4:33
DN
GRT
Greater Than (A>B)
Source A N60:15
-1<
Source B 3277
3277<
JSR
Jump To Subroutine
SBR File Number U:13
T4:33
RES
NETWORK INTERLOCK
0011
JSR
Jump To Subroutine
SBR File Number U:15
ALARM ACKNOWLEDGE
0012
JSR
Jump To Subroutine
SBR File Number U:17
OUTPUT TO STROBE AND LIGHTS
0013
JSR
Jump To Subroutine
SBR File Number U:18
0014
JSR
Jump To Subroutine
SBR File Number U:20
SEND OUTPUTS
0015
N20:17
7
JSR
Jump To Subroutine
SBR File Number U:19
RESET TOTAL FLOW COUNTER
0016
N20:17
5
CLR
Clear
Dest C5:1.ACC
8331<
CLR
Clear
Dest C5:2.ACC
0<

LAD 2 - --- Total Rungs in File = 18

0017 ——(END)——

LAD 3 - — Total Rungs in File = 16

INITIALIZE THERMOCOUPLE MODULE IN SLOT 7 TO READ IN DEGREES F

0000 — SBR Subroutine — COP Copy File Source #N9:0 Dest #O:7.0 Length 4

0001 — MOV Move Source 0 0< Dest N13:0 0<

0002 — NOT NOT Source N13:0 0< Dest N13:1 -1<

0003 — MOV Move Source 0 0< Dest N15:8 0<

0004 — MOV Move Source 2 2< Dest N15:7 2<

0005 — B3:7 (U) 6

SKID K NODE 4, U-103

0006

MOV
Move
Source 4
4<
Dest N7:50
4<

Node
Address/
Baud Rate

MVM
Masked Move
Source N7:50
4<
Mask 00FFh
255<
Dest S2:15
1028<

0007

JSR
Jump To Subroutine
SBR File Number U:10

0008

CLR
Clear
Dest N20:32
4<

MOV
Move
Source N13:1
-1<
Dest N40:15
4<

0009

CLR
Clear
Dest N15:2
12289<

0010

N13:1 (1) — N12:0 (12)

0011

MOV
Move
Source 36
36<
Dest N15:10
36<

0012

MOV
Move
Source N15:10
36<
Dest N7:5
36<

MOV
Move
Source N15:10
36<
Dest N7:25
36<

MOV
Move
Source N15:10
36<
Dest N7:45
36<

MOV
Move
Source N15:10
36<
Dest N7:65
36<

MOV
Move
Source N15:10
36<
Dest N7:85
36<

MOV
Move
Source N15:10
36<
Dest N7:105
36<

MOV
Move
Source N15:10
36<
Dest N7:125
36<

OUTPUT TO DOV

0013

COP
Copy File
Source #N14:0
Dest #N60:4
Length 15

LAD 3 - --- Total Rungs in File = 16

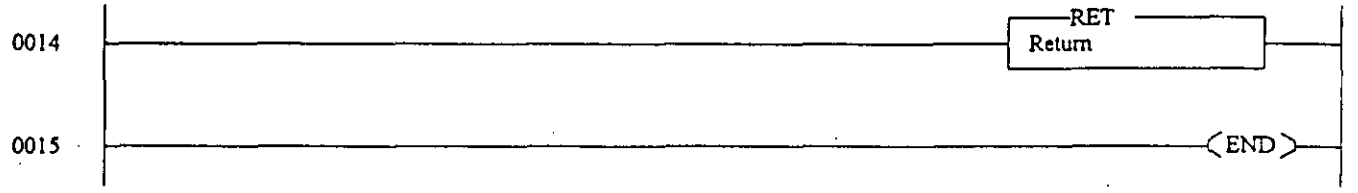

LAD 4 - — Total Rungs in File = 10

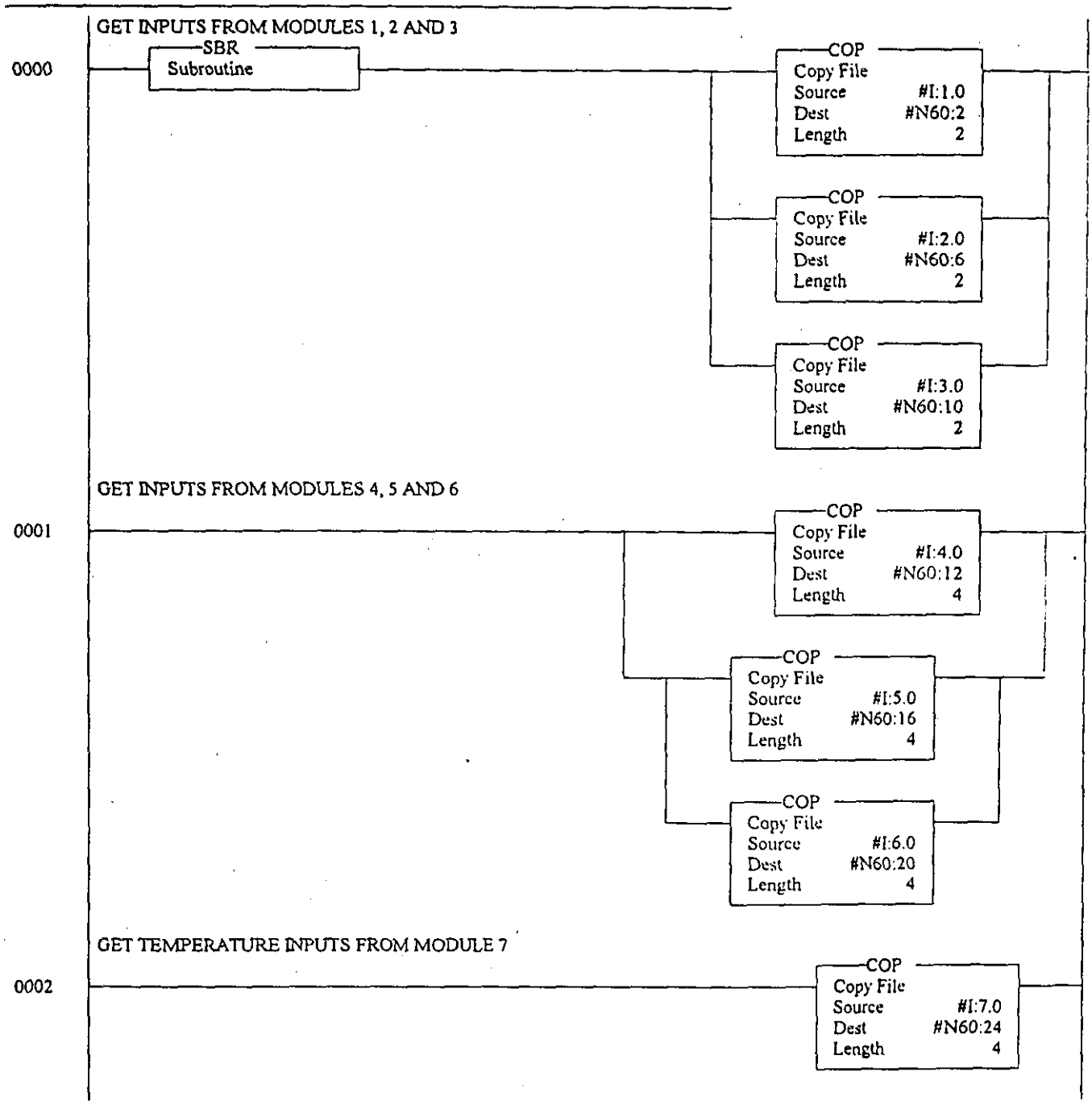

GET INPUTS FROM MODULE 8

0003

MVM
Masked Move
Source I:8.0
0<
Mask 003Fh
63<
Dest N17:0
0<

MUL
Multiply
Source A N17:0
0<
Source B 64
64<
Dest N17:1
0<

MVM
Masked Move
Source N17:1
0<
Mask 0FC0h
4032<
Dest N60:28
0<

GET INPUTS FROM MODULE 9

0004

MVM
Masked Move
Source I:9.0
43<
Mask 003Fh
63<
Dest N17:2
43<

MUL
Multiply
Source A N17:2
43<
Source B 64
64<
Dest N17:3
2752<

MVM
Masked Move
Source N17:3
2752<
Mask 0FC0h
4032<
Dest N60:29
2752<

GET INPUTS FROM MODULE 10

0005

MVM
Masked Move
Source I:10.0
28<
Mask 003Fh
63<
Dest N17:4
28<

MUL
Multiply
Source A N17:4
28<
Source B 64
64<
Dest N17:5
1792<

MVM
Masked Move
Source N17:5
1792<
Mask 0FC0h
4032<
Dest N60:30
1792<

GET INPUTS FROM MODULE 11

0006

MVM
Masked Move
Source #I:11.0
0<
Mask 003Fh
63<
Dest N17:6
0<

MUL
Multiply
Source A N17:6
0<
Source B 64
64<
Dest N17:7
0<

MVM
Masked Move
Source N17:7
0<
Mask 0FC0h
4032<
Dest N60:31
34<

GET INPUTS FROM MODULE 12

0007

MVM
Masked Move
Source I:12.0
0<
Mask 003Fh
63<
Dest N17:8
0<

MUL
Multiply
Source A N17:8
0<
Source B 64
64<
Dest N17:9
0<

MVM
Masked Move
Source N17:9
0<
Mask 0FC0h
4032<
Dest N60:32
0<

0008

RET
Return

0009

END

LAD 5 - — Total Rungs in File = 105

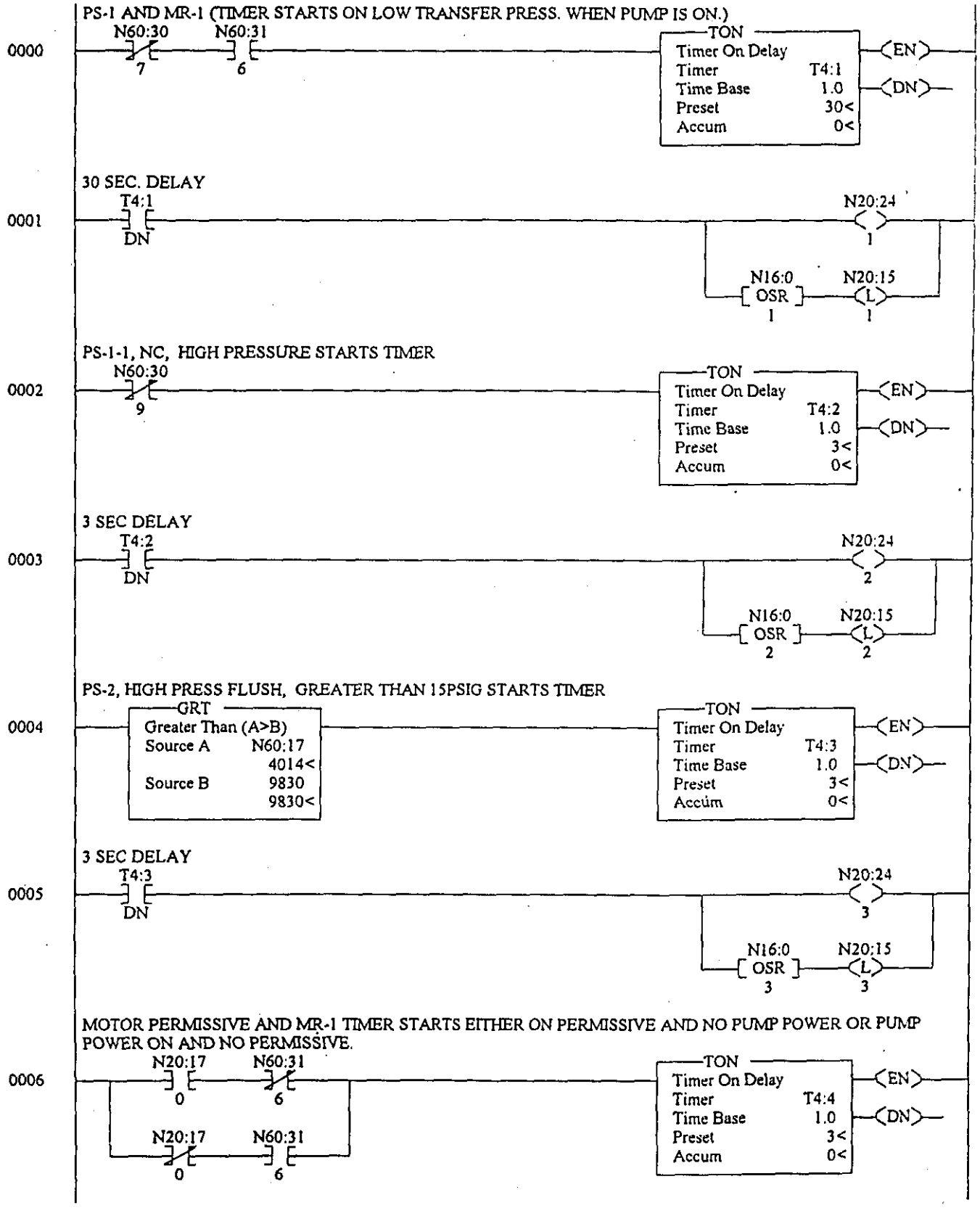

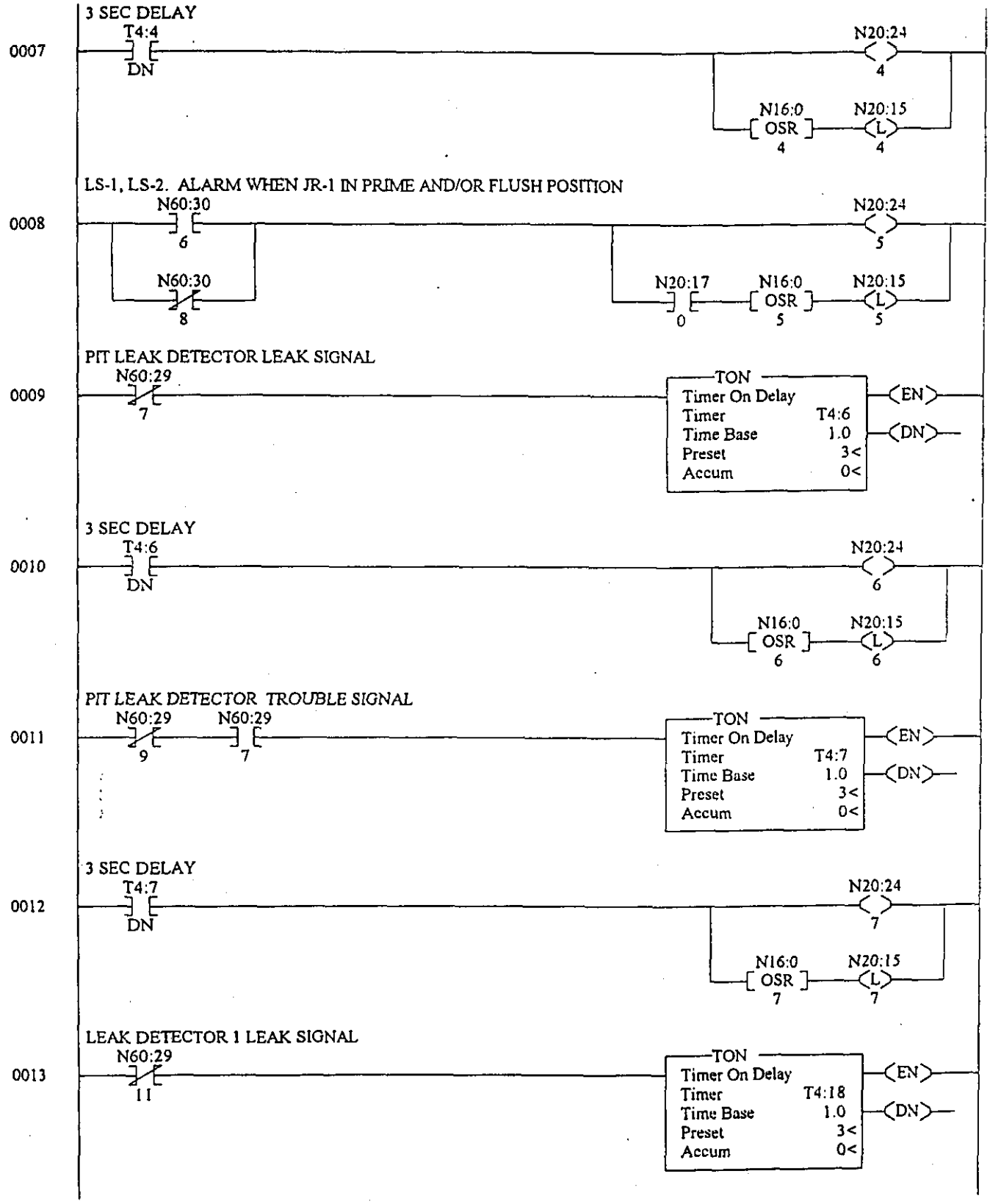
3 SEC DELAY
0007
T4:4
DN
N20:24
4
N16:0
OSR
4
N20:15
L
4
LS-1, LS-2. ALARM WHEN JR-1 IN PRIME AND/OR FLUSH POSITION
0008
N60:30
6
N60:30
8
N20:24
5
N20:17
0
N16:0
OSR
5
N20:15
L
5
PIT LEAK DETECTOR LEAK SIGNAL
0009
N60:29
7
TON
Timer On Delay
Timer T4:6
Time Base 1.0
Preset 3<
Accum 0<
EN
DN
3 SEC DELAY
0010
T4:6
DN
N20:24
6
N16:0
OSR
6
N20:15
L
6
PIT LEAK DETECTOR TROUBLE SIGNAL
0011
N60:29
9
N60:29
7
TON
Timer On Delay
Timer T4:7
Time Base 1.0
Preset 3<
Accum 0<
EN
DN
3 SEC DELAY
0012
T4:7
DN
N20:24
7
N16:0
OSR
7
N20:15
L
7
LEAK DETECTOR 1 LEAK SIGNAL
0013
N60:29
11
TON
Timer On Delay
Timer T4:18
Time Base 1.0
Preset 3<
Accum 0<
EN
DN

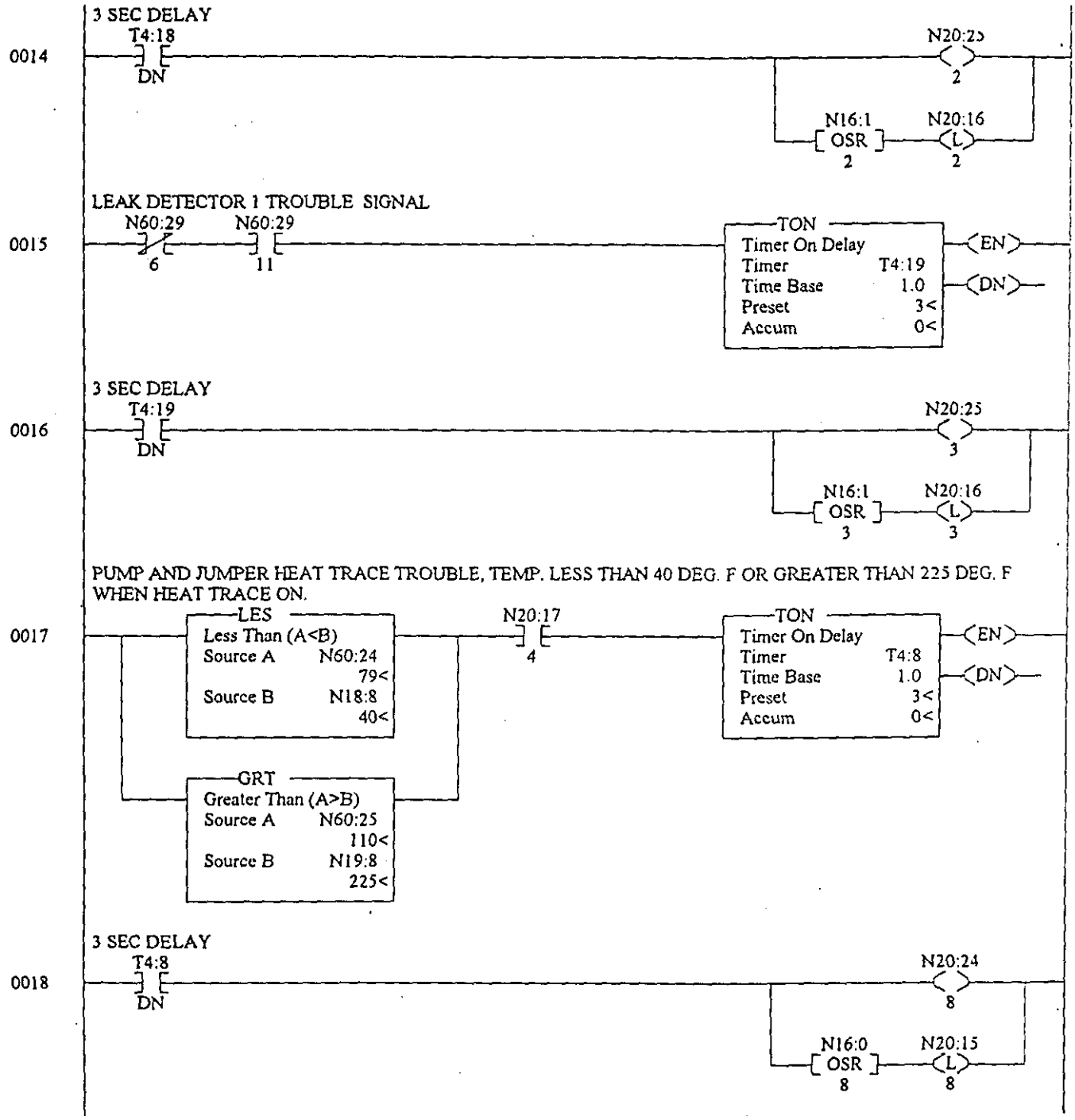
3 SEC DELAY
0014
T4:18
DN
N20:25
2
N16:1
OSR
2
N20:16
L
2
LEAK DETECTOR 1 TROUBLE SIGNAL
0015
N60:29
6
N60:29
11
TON
Timer On Delay
Timer T4:19
Time Base 1.0
Preset 3<
Accum 0<
EN
DN
3 SEC DELAY
0016
T4:19
DN
N20:25
3
N16:1
OSR
3
N20:16
L
3
PUMP AND JUMPER HEAT TRACE TROUBLE, TEMP. LESS THAN 40 DEG. F OR GREATER THAN 225 DEG. F WHEN HEAT TRACE ON.
0017
LES
Less Than (A<B)
Source A N60:24
79<
Source B N18:8
40<
N20:17
4
TON
Timer On Delay
Timer T4:8
Time Base 1.0
Preset 3<
Accum 0<
EN
DN
GRT
Greater Than (A>B)
Source A N60:25
110<
Source B N19:8
225<
3 SEC DELAY
0018
T4:8
DN
N20:24
8
N16:0
OSR
8
N20:15
L
8

0019

WATER TANK LOW LEVEL, ALARMS AT LESS THAN 12.25 INCHES, RESETS ABOVE 15.5 INCHES

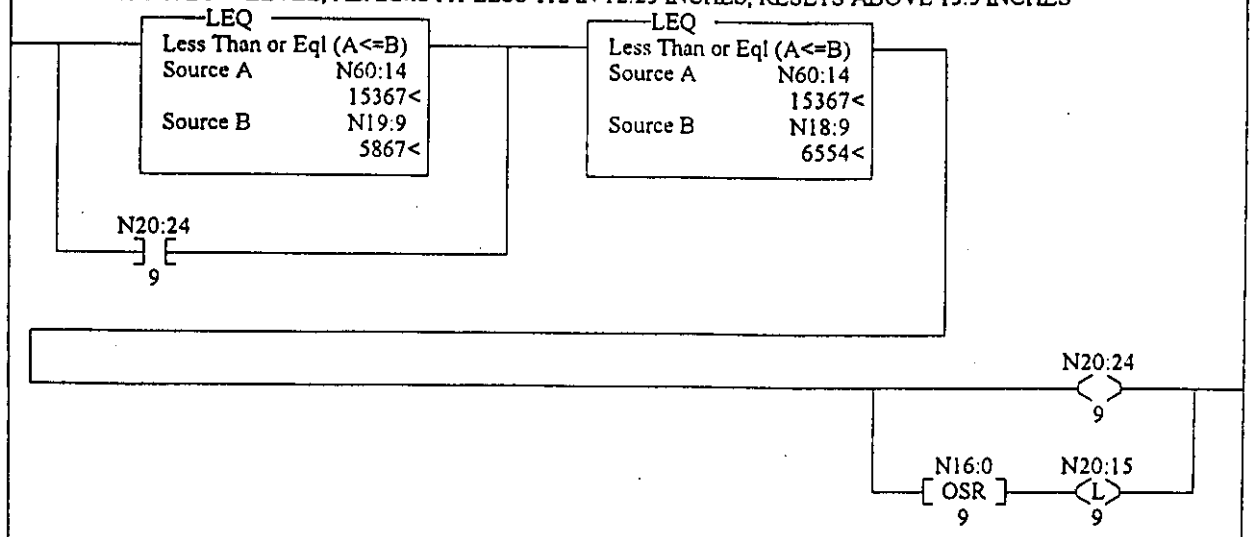

0020

INSTRUMENT CABINET TEMPERATURE HIGH, GREATER THAN 130 DEG. F, RESETS BELOW 125 DEG. F.

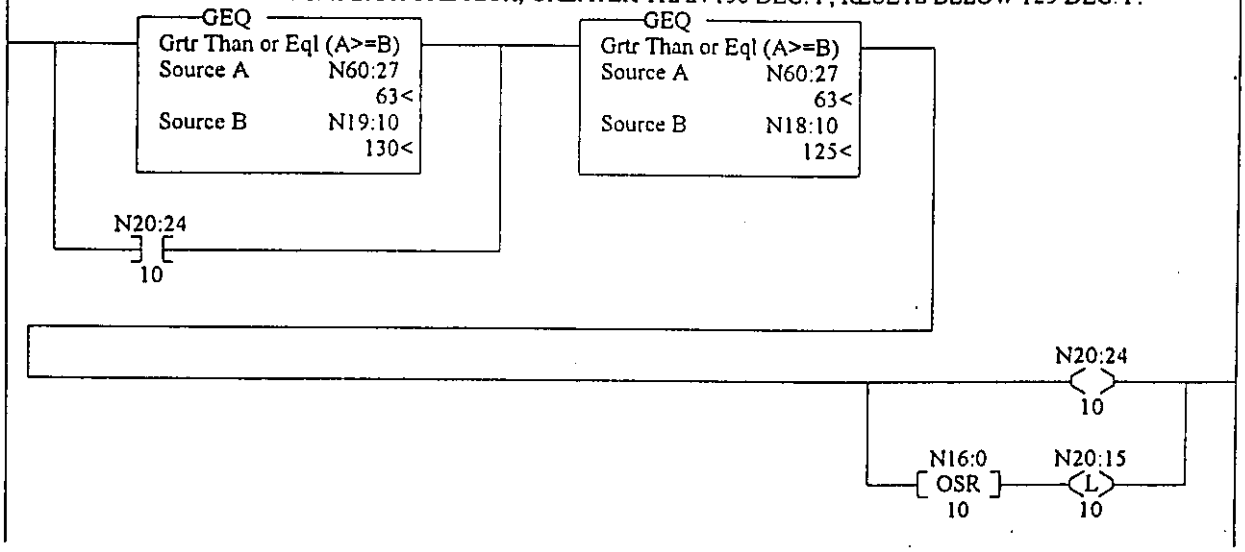

LAD 5 - — Total Rungs in File = 105

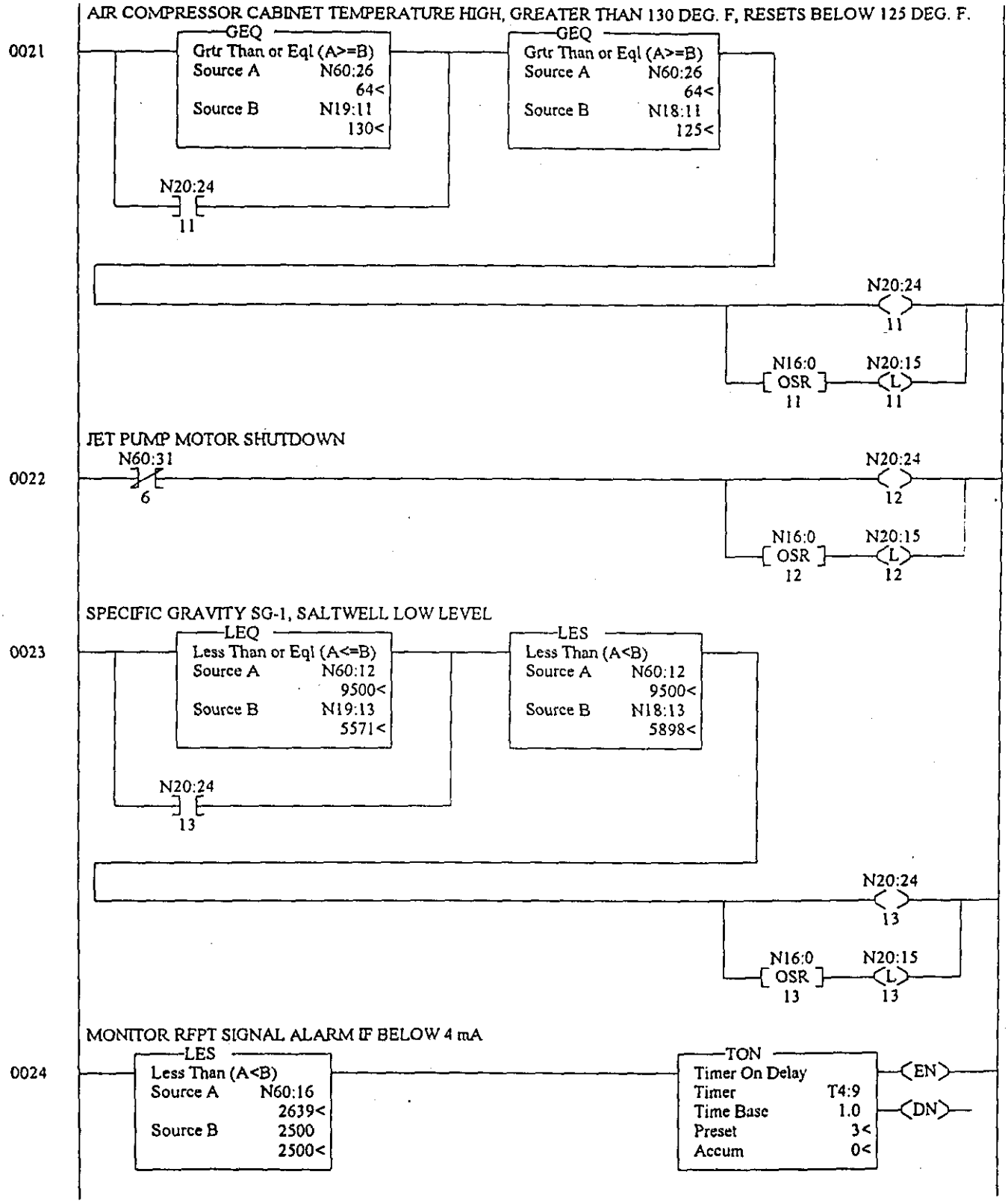

MONITOR RFPT SIGNAL ALARM IF BELOW 4 mA

0025 — T4:9 DN — N20:24 14 — N16:0 OSR 14 — N20:15 L 14

STATION ON DH-485 (PRESENT)

0026 — AND
Bitwise AND
Source A S2:9 3811h<
Source B N15:5 3001h<
Dest N15:2 3001h<

STATION ON DH-485 (PREVIOUS)

0027 — MVM
Masked Move
Source N15:0 12289<
Mask N15:5 3001h<
Dest N15:3 12289<

COMPARE PRESENT AND PREVIOUS STATION DATA, TIMER STARTS IF NOT THE SAME.

0028 — NEQ
Not Equal
Source A N15:2 12289<
Source B N15:3 12289<

TON
Timer On Delay
Timer T4:15
Time Base 1.0
Preset 60<
Accum 0<
EN
DN

DATA COMM. FAILURE

0029 — T4:15 DN — N20:24 15 — N16:0 OSR 15 — N20:15 L 15

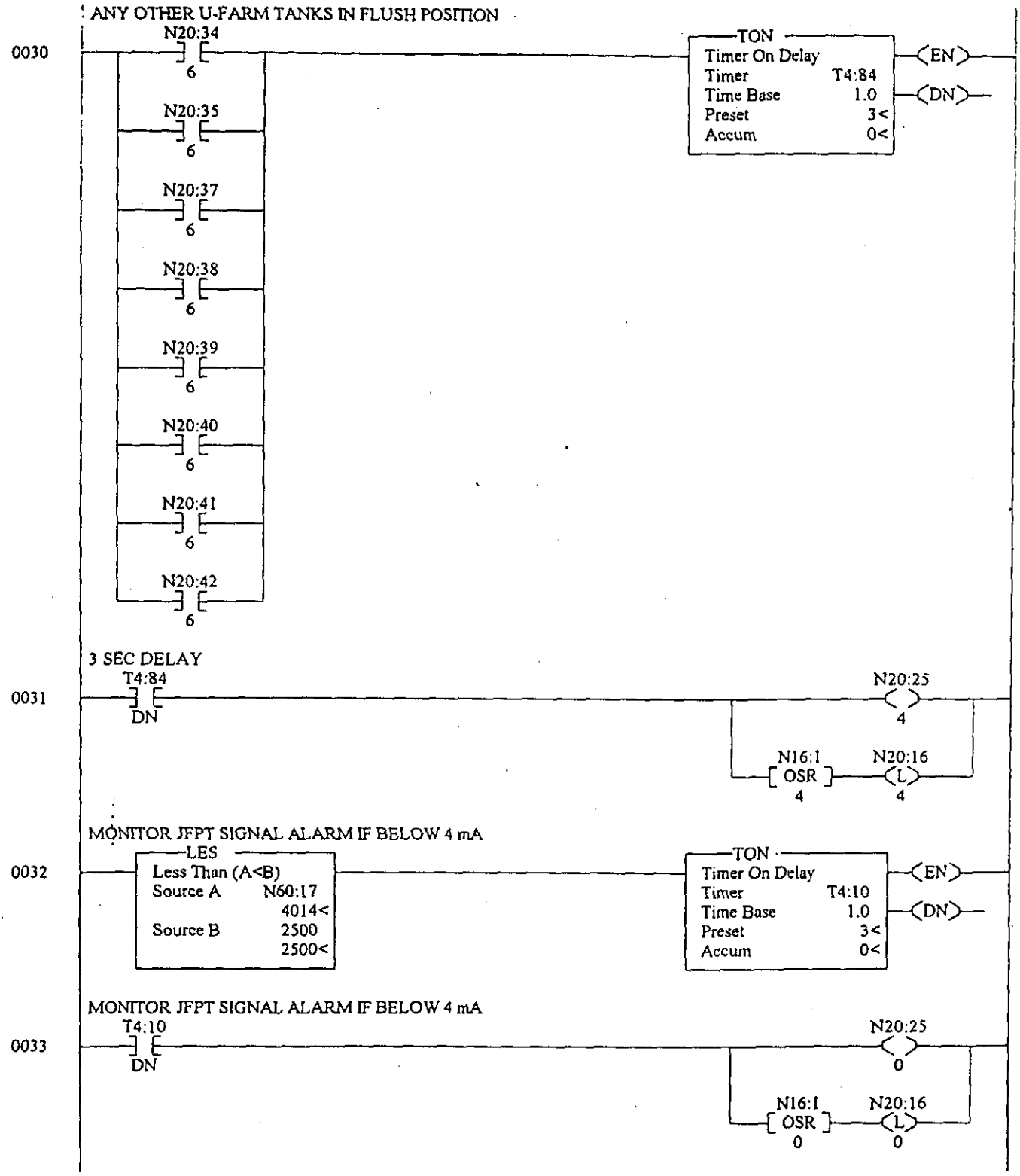
ANY OTHER U-FARM TANKS IN FLUSH POSITION
0030
N20:34
6
N20:35
6
N20:37
6
N20:38
6
N20:39
6
N20:40
6
N20:41
6
N20:42
6
TON
Timer On Delay
Timer T4:84
Time Base 1.0
Preset 3<
Accum 0<
EN
DN
3 SEC DELAY
0031
T4:84
DN
N20:25
4
N16:1
OSR
4
N20:16
L
4
MONITOR JFPT SIGNAL ALARM IF BELOW 4 mA
0032
LES
Less Than (A<B)
Source A N60:17
4014<
Source B 2500
2500<
TON
Timer On Delay
Timer T4:10
Time Base 1.0
Preset 3<
Accum 0<
EN
DN
MONITOR JFPT SIGNAL ALARM IF BELOW 4 mA
0033
T4:10
DN
N20:25
0
N16:1
OSR
0
N20:16
L
0

0034 ANY OTHER U-FARM LEAK DET. (LEAK OR TROUBLE) ALARM

N20:34 3
N20:34 4
N20:35 3
N20:35 4
N20:37 3
N20:37 4
N20:38 3
N20:38 4
N20:39 3
N20:39 4
N20:40 3
N20:40 4
N20:41 3
N20:41 4
N20:42 3
N20:42 4

TON
Timer On Delay
Timer T4:17
Time Base 1.0
Preset 3<
Accum 0<
EN
DN

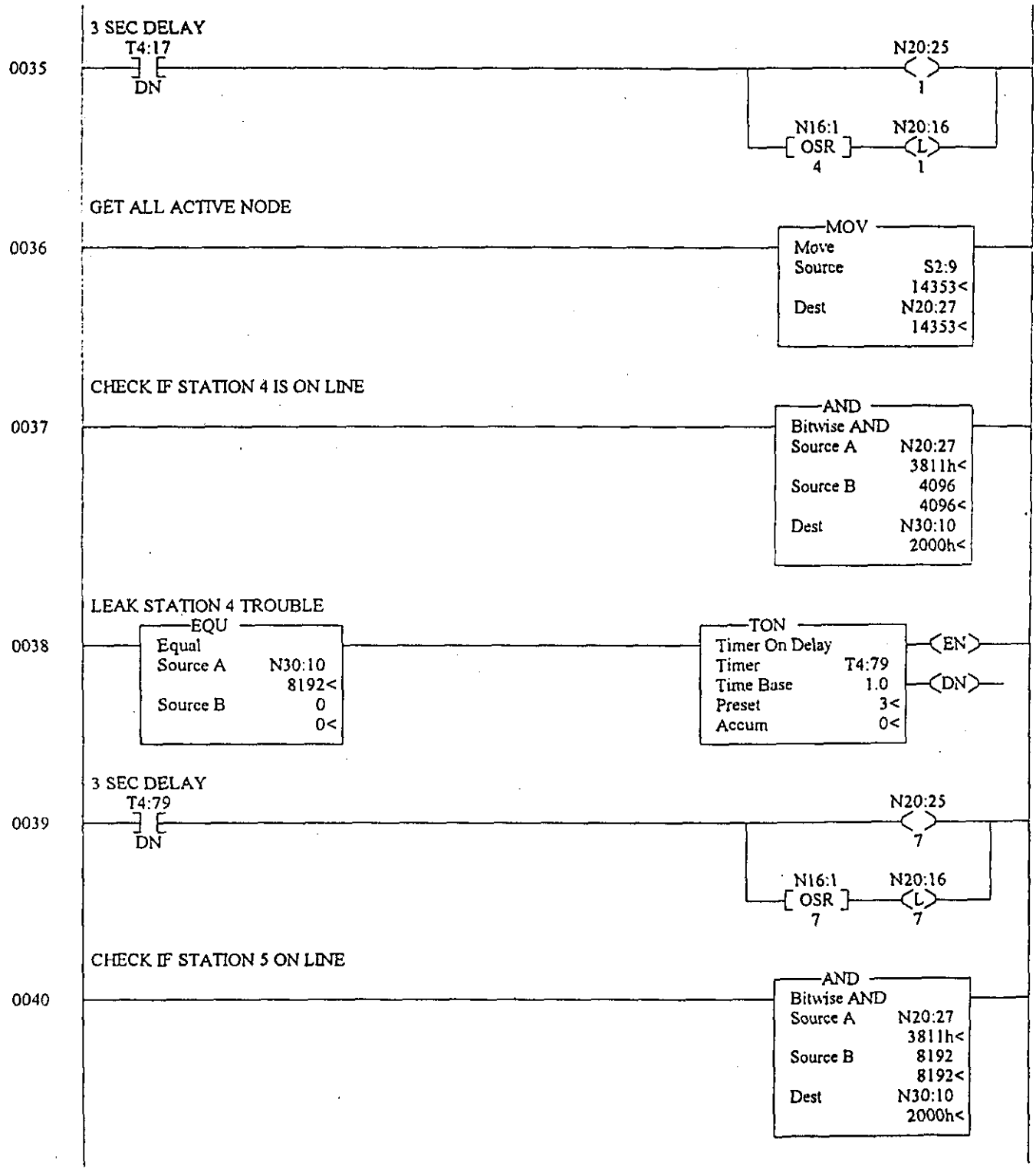
3 SEC DELAY
T4:17
DN
0035
N20:25
1
N16:1
OSR
4
N20:16
L
1
GET ALL ACTIVE NODE
0036
MOV
Move
Source S2:9
14353<
Dest N20:27
14353<
CHECK IF STATION 4 IS ON LINE
0037
AND
Bitwise AND
Source A N20:27
3811h<
Source B 4096
4096<
Dest N30:10
2000h<
LEAK STATION 4 TROUBLE
0038
EQU
Equal
Source A N30:10
8192<
Source B 0
0<
TON
Timer On Delay
Timer T4:79
Time Base 1.0
Preset 3<
Accum 0<
EN
DN
3 SEC DELAY
T4:79
DN
0039
N20:25
7
N16:1
OSR
7
N20:16
L
7
CHECK IF STATION 5 ON LINE
0040
AND
Bitwise AND
Source A N20:27
3811h<
Source B 8192
8192<
Dest N30:10
2000h<

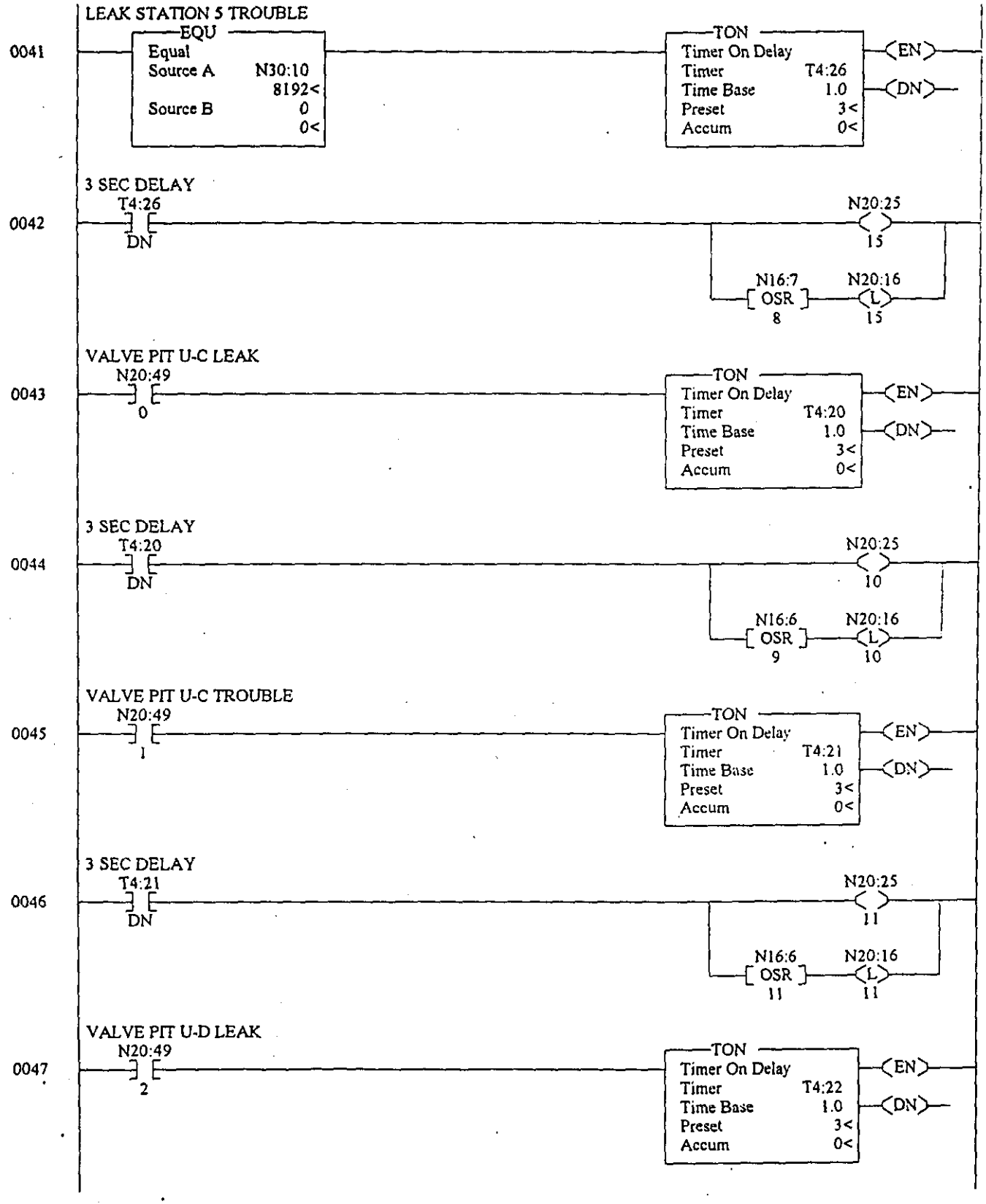
LEAK STATION 5 TROUBLE
0041
EQU
Equal
Source A N30:10
8192<
Source B 0
0<
TON
Timer On Delay
Timer T4:26
Time Base 1.0
Preset 3<
Accum 0<
EN
DN
3 SEC DELAY
T4:26
DN
0042
N20:25
15
N16:7
OSR
8
N20:16
L
15
VALVE PIT U-C LEAK
N20:49
0
0043
TON
Timer On Delay
Timer T4:20
Time Base 1.0
Preset 3<
Accum 0<
EN
DN
3 SEC DELAY
T4:20
DN
0044
N20:25
10
N16:6
OSR
9
N20:16
L
10
VALVE PIT U-C TROUBLE
N20:49
1
0045
TON
Timer On Delay
Timer T4:21
Time Base 1.0
Preset 3<
Accum 0<
EN
DN
3 SEC DELAY
T4:21
DN
0046
N20:25
11
N16:6
OSR
11
N20:16
L
11
VALVE PIT U-D LEAK
N20:49
2
0047
TON
Timer On Delay
Timer T4:22
Time Base 1.0
Preset 3<
Accum 0<
EN
DN

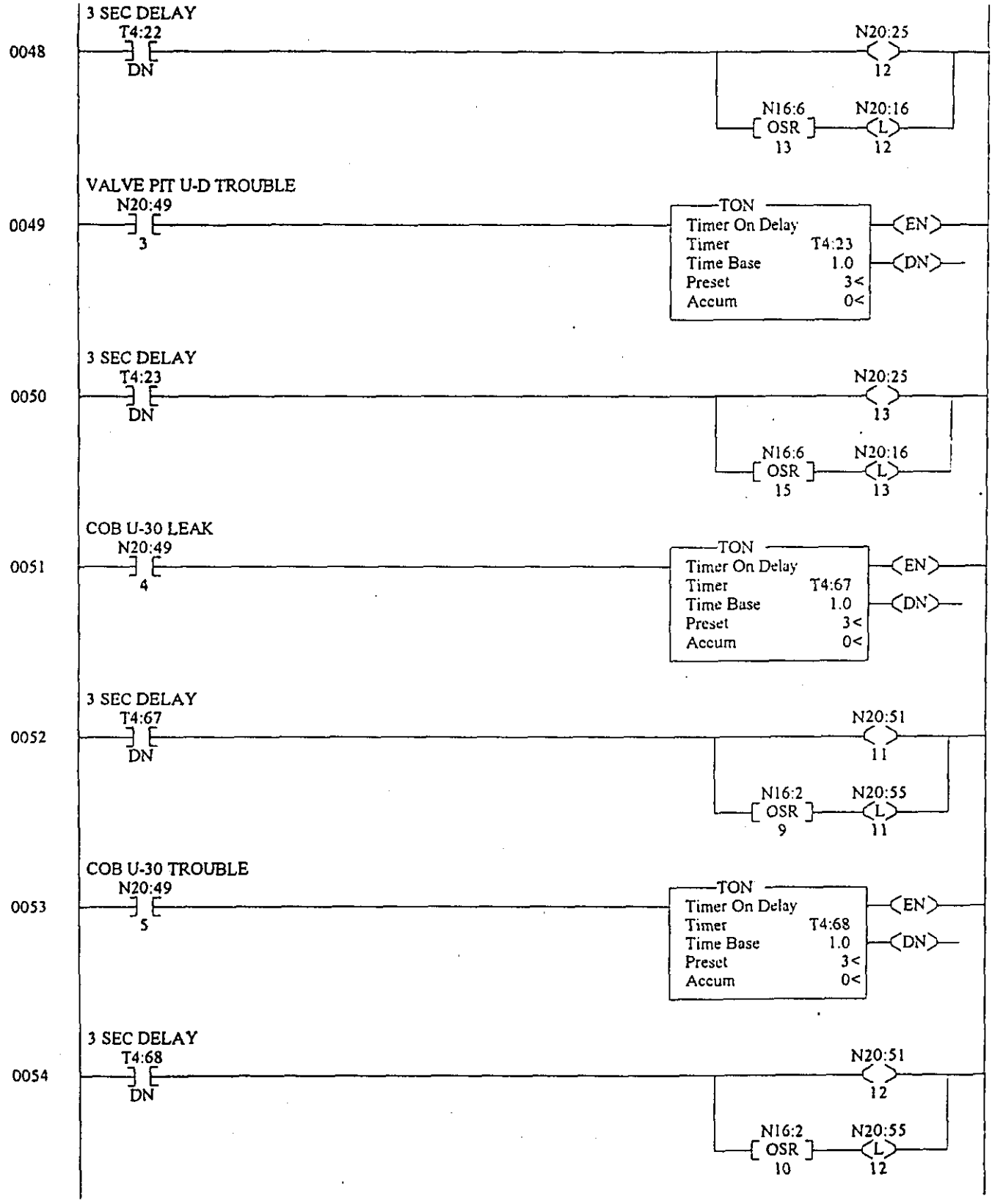
0048
3 SEC DELAY
T4:22
DN
N20:25
12
N16:6
OSR
13
N20:16
L
12
0049
VALVE PIT U-D TROUBLE
N20:49
3
TON
Timer On Delay
Timer T4:23
Time Base 1.0
Preset 3<
Accum 0<
EN
DN
0050
3 SEC DELAY
T4:23
DN
N20:25
13
N16:6
OSR
15
N20:16
L
13
0051
COB U-30 LEAK
N20:49
4
TON
Timer On Delay
Timer T4:67
Time Base 1.0
Preset 3<
Accum 0<
EN
DN
0052
3 SEC DELAY
T4:67
DN
N20:51
11
N16:2
OSR
9
N20:55
L
11
0053
COB U-30 TROUBLE
N20:49
5
TON
Timer On Delay
Timer T4:68
Time Base 1.0
Preset 3<
Accum 0<
EN
DN
0054
3 SEC DELAY
T4:68
DN
N20:51
12
N16:2
OSR
10
N20:55
L
12

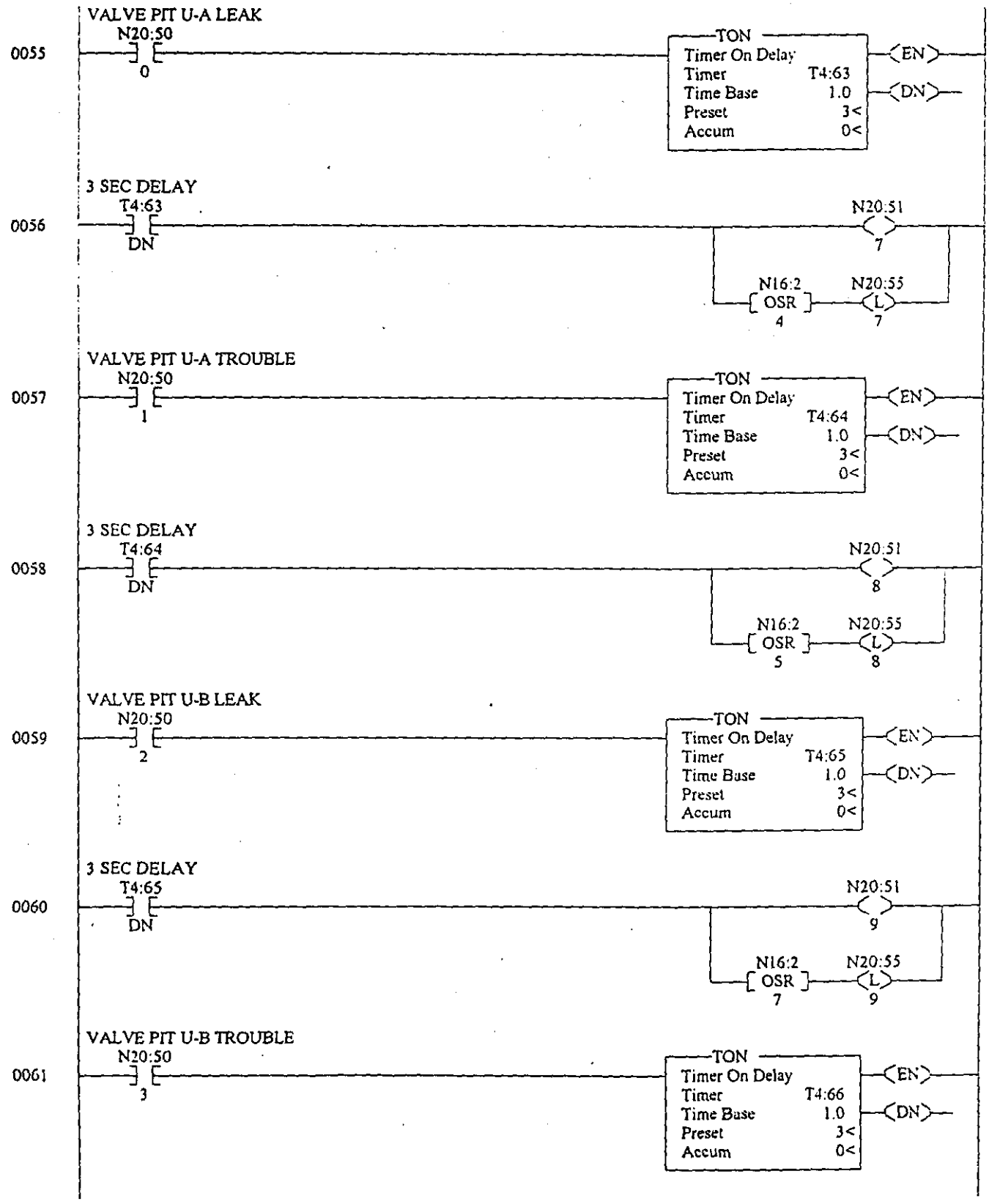
VALVE PIT U-A LEAK
N20:50
0
0055
TON
Timer On Delay
Timer T4:63
Time Base 1.0
Preset 3<
Accum 0<
EN
DN
3 SEC DELAY
T4:63
DN
0056
N20:51
7
N16:2
OSR
4
N20:55
L
7
VALVE PIT U-A TROUBLE
N20:50
1
0057
TON
Timer On Delay
Timer T4:64
Time Base 1.0
Preset 3<
Accum 0<
EN
DN
3 SEC DELAY
T4:64
DN
0058
N20:51
8
N16:2
OSR
5
N20:55
L
8
VALVE PIT U-B LEAK
N20:50
2
0059
TON
Timer On Delay
Timer T4:65
Time Base 1.0
Preset 3<
Accum 0<
EN
DN
3 SEC DELAY
T4:65
DN
0060
N20:51
9
N16:2
OSR
7
N20:55
L
9
VALVE PIT U-B TROUBLE
N20:50
3
0061
TON
Timer On Delay
Timer T4:66
Time Base 1.0
Preset 3<
Accum 0<
EN
DN

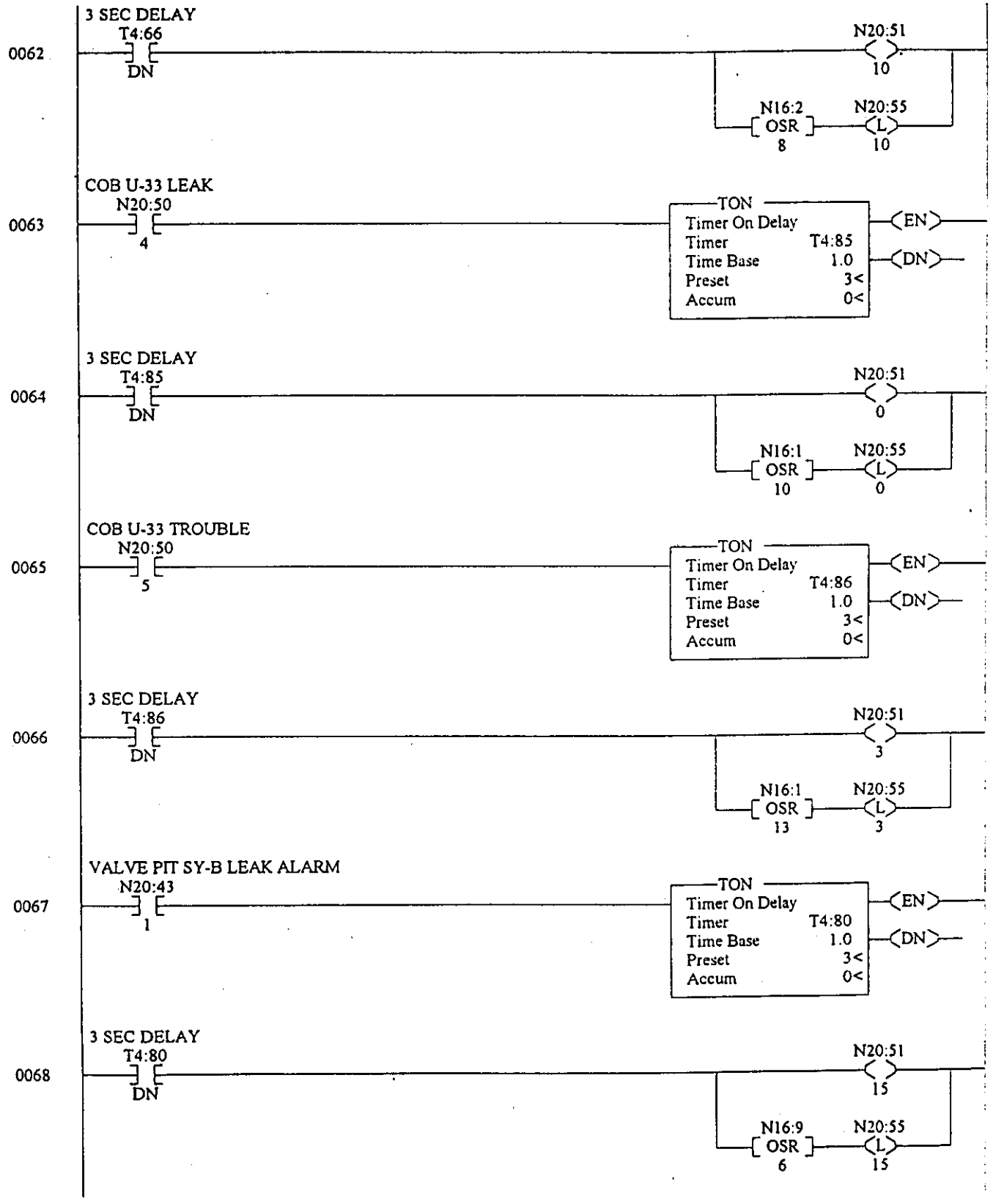
0062
3 SEC DELAY
T4:66
DN
N20:51
10
N16:2
OSR
8
N20:55
L
10
0063
COB U-33 LEAK
N20:50
4
TON
Timer On Delay
Timer T4:85
Time Base 1.0
Preset 3<
Accum 0<
EN
DN
0064
3 SEC DELAY
T4:85
DN
N20:51
0
N16:1
OSR
10
N20:55
L
0
0065
COB U-33 TROUBLE
N20:50
5
TON
Timer On Delay
Timer T4:86
Time Base 1.0
Preset 3<
Accum 0<
EN
DN
0066
3 SEC DELAY
T4:86
DN
N20:51
3
N16:1
OSR
13
N20:55
L
3
0067
VALVE PIT SY-B LEAK ALARM
N20:43
1
TON
Timer On Delay
Timer T4:80
Time Base 1.0
Preset 3<
Accum 0<
EN
DN
0068
3 SEC DELAY
T4:80
DN
N20:51
15
N16:9
OSR
6
N20:55
L
15

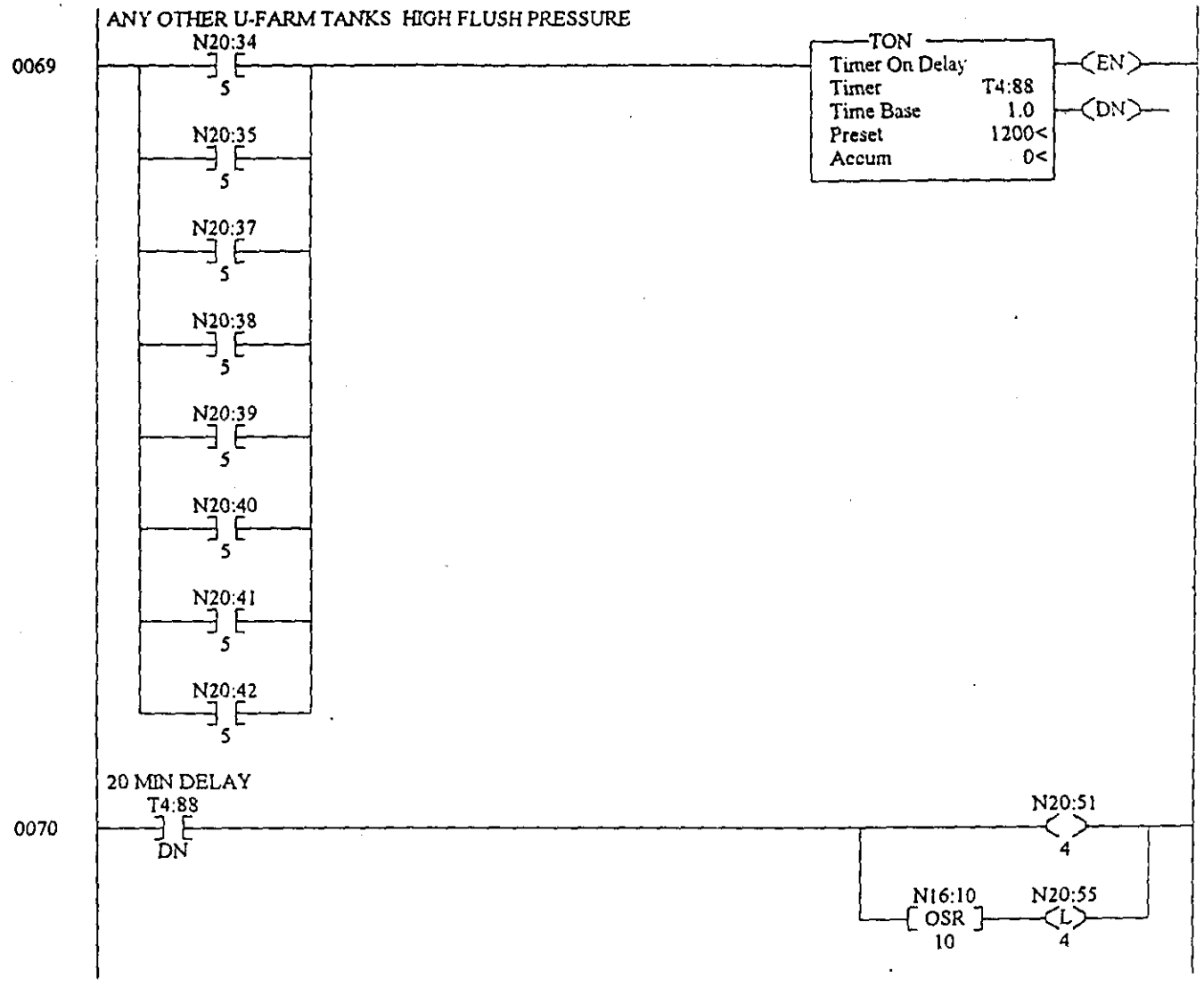
ANY OTHER U-FARM TANKS HIGH FLUSH PRESSURE
0069
N20:34
5
N20:35
5
N20:37
5
N20:38
5
N20:39
5
N20:40
5
N20:41
5
N20:42
5
TON
Timer On Delay
Timer T4:88
Time Base 1.0
Preset 1200<
Accum 0<
EN
DN
20 MIN DELAY
0070
T4:88
DN
N20:51
4
N16:10
OSR
10
N20:55
L
4

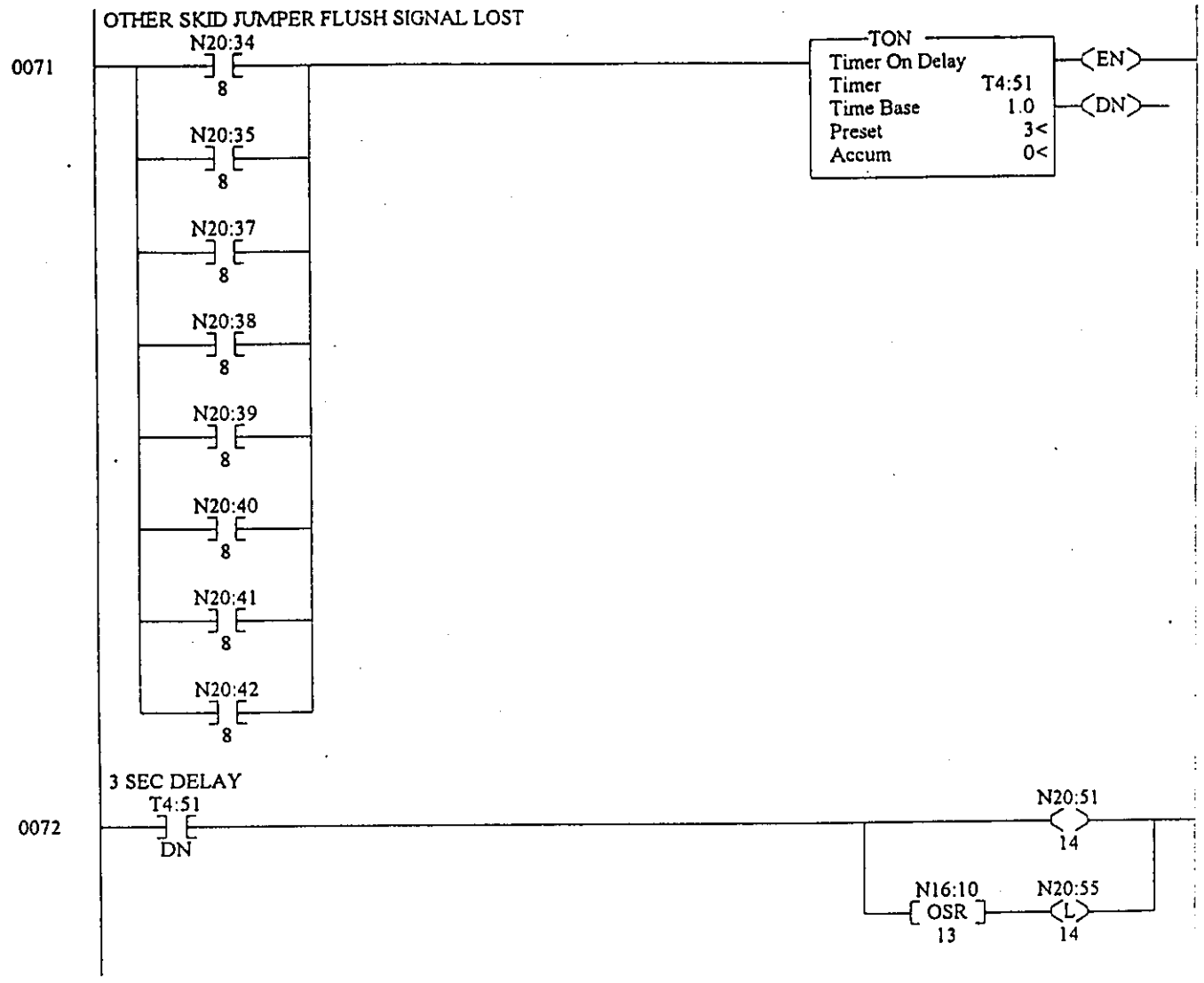
OTHER SKID JUMPER FLUSH SIGNAL LOST
0071
N20:34
8
N20:35
8
N20:37
8
N20:38
8
N20:39
8
N20:40
8
N20:41
8
N20:42
8
TON
Timer On Delay
Timer T4:51
Time Base 1.0
Preset 3<
Accum 0<
EN
DN
3 SEC DELAY
0072
T4:51
DN
N20:51
14
N16:10
OSR
13
N20:55
L
14

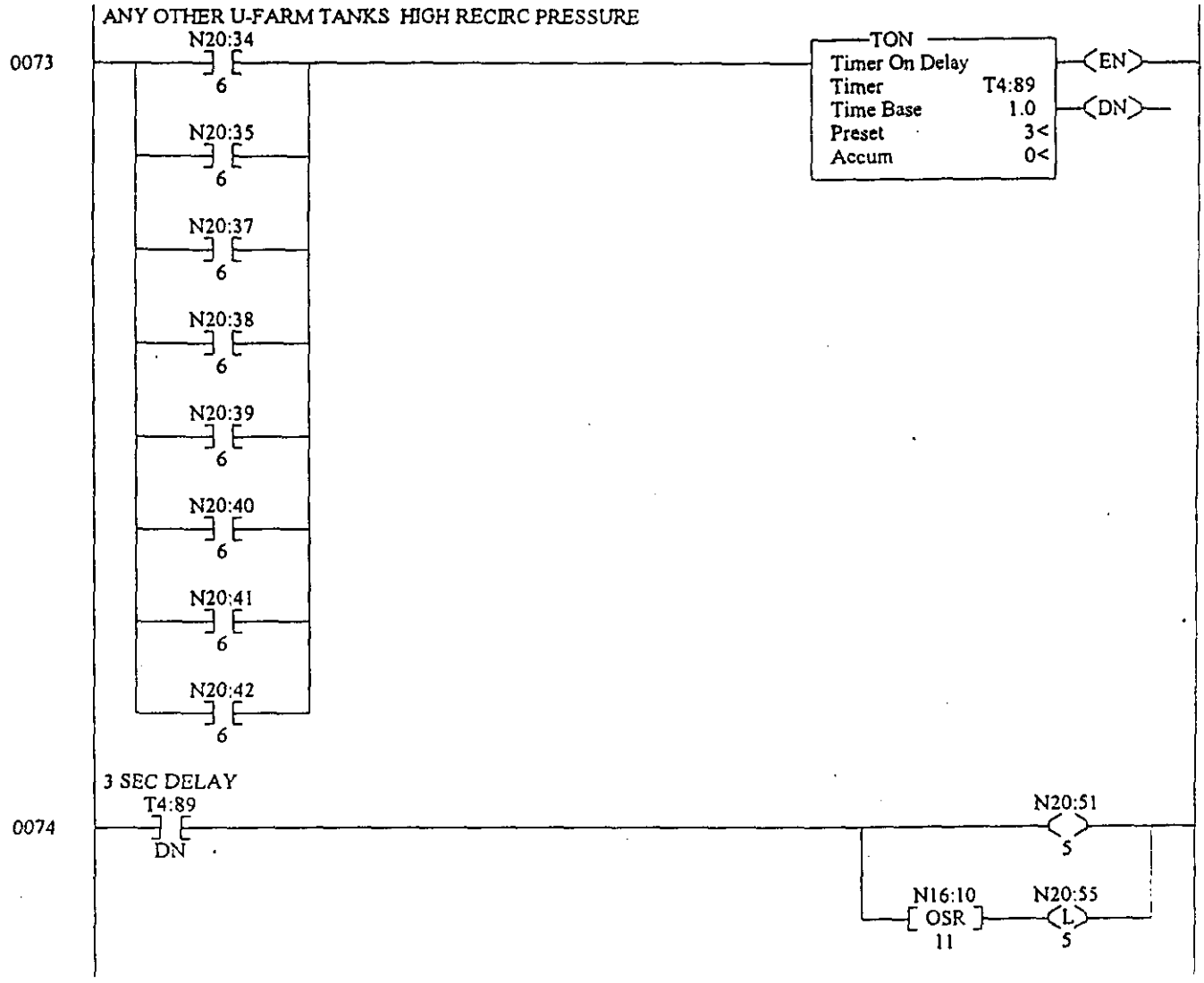
ANY OTHER U-FARM TANKS HIGH RECIRC PRESSURE
0073
N20:34
6
N20:35
6
N20:37
6
N20:38
6
N20:39
6
N20:40
6
N20:41
6
N20:42
6
TON
Timer On Delay
Timer T4:89
Time Base 1.0
Preset 3<
Accum 0<
EN
DN
3 SEC DELAY
0074
T4:89
DN
N20:51
5
N16:10
OSR
11
N20:55
L
5

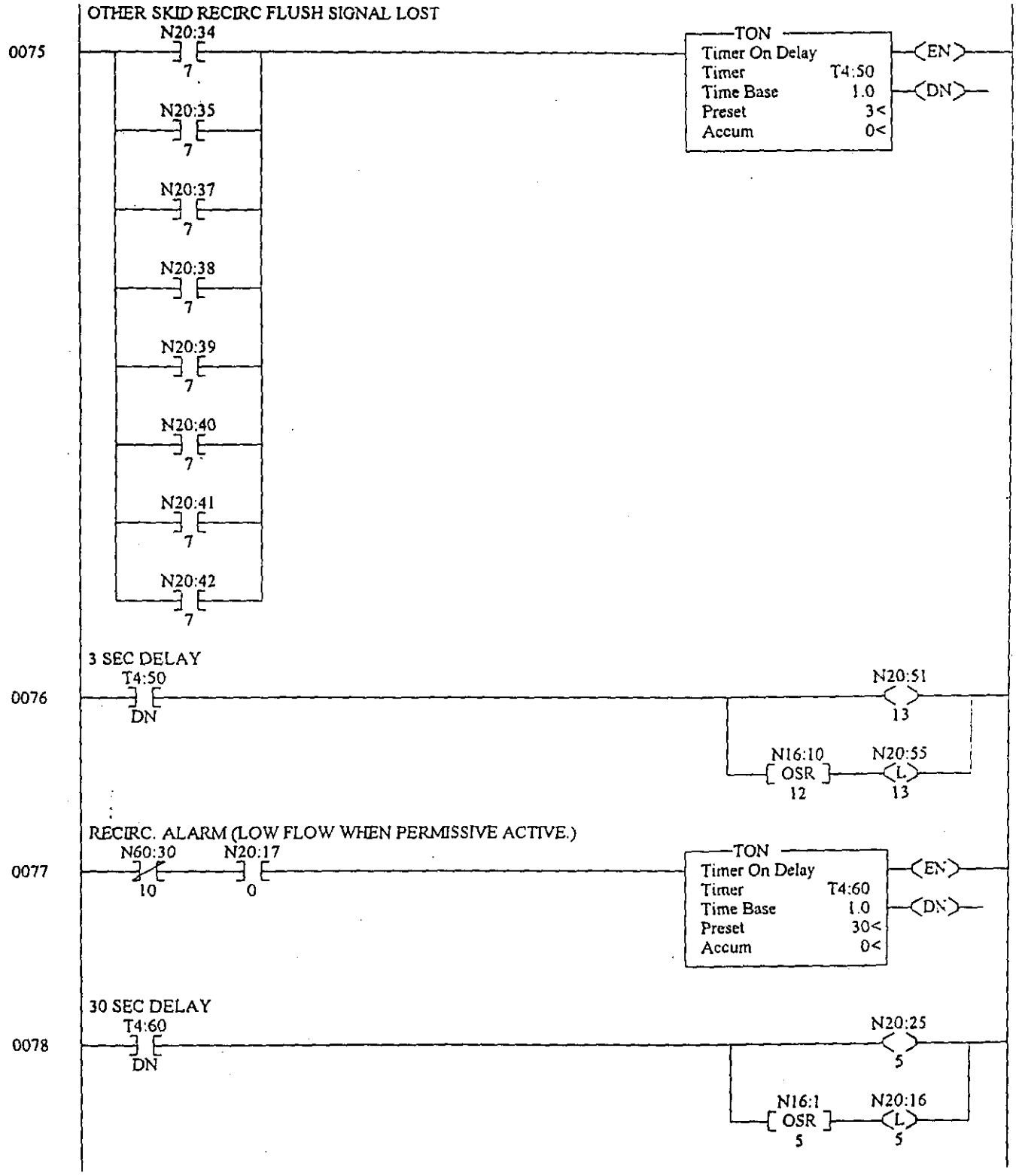
OTHER SKID RECIRC FLUSH SIGNAL LOST
0075
N20:34
7
N20:35
7
N20:37
7
N20:38
7
N20:39
7
N20:40
7
N20:41
7
N20:42
7
TON
Timer On Delay
Timer T4:50
Time Base 1.0
Preset 3<
Accum 0<
EN
DN
3 SEC DELAY
0076
T4:50
DN
N20:51
13
N16:10
OSR
12
N20:55
L
13
RECIRC. ALARM (LOW FLOW WHEN PERMISSIVE ACTIVE.)
0077
N60:30
10
N20:17
0
TON
Timer On Delay
Timer T4:60
Time Base 1.0
Preset 30<
Accum 0<
EN
DN
30 SEC DELAY
0078
T4:60
DN
N20:25
5
N16:1
OSR
5
N20:16
L
5

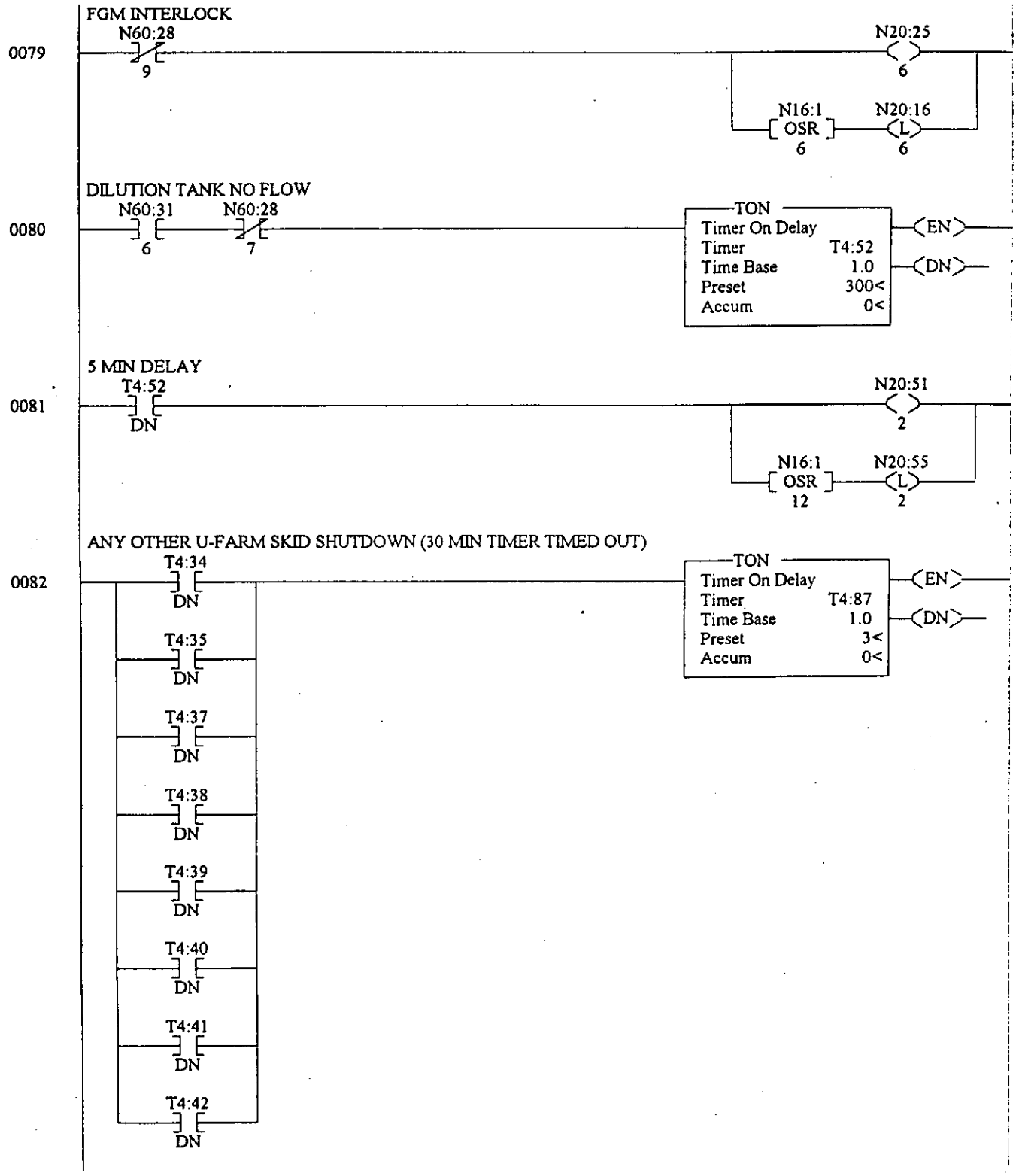
0079
FGM INTERLOCK
N60:28
9
N20:25
6
N16:1
OSR
6
N20:16
L
6
0080
DILUTION TANK NO FLOW
N60:31
6
N60:28
7
TON
Timer On Delay
Timer T4:52
Time Base 1.0
Preset 300<
Accum 0<
EN
DN
0081
5 MIN DELAY
T4:52
DN
N20:51
2
N16:1
OSR
12
N20:55
L
2
0082
ANY OTHER U-FARM SKID SHUTDOWN (30 MIN TIMER TIMED OUT)
T4:34
DN
T4:35
DN
T4:37
DN
T4:38
DN
T4:39
DN
T4:40
DN
T4:41
DN
T4:42
DN
TON
Timer On Delay
Timer T4:87
Time Base 1.0
Preset 3<
Accum 0<
EN
DN

0083 3 SEC DELAY
T4:87 DN → N20:25 8
N16:1 OSR 8 → N20:16 L 8

0084 RECIRC FLUSH HIGH PRESSURE ALARM, GREATER THAN 15 PSIG
GRT Greater Than (A>B)
Source A N60:16 2639<
Source B 4588 4588<
TON Timer On Delay
Timer T4:62
Time Base 1.0
Preset 3<
Accum 0<
EN
DN

0085 3 SEC DELAY
T4:62 DN → N20:51 6
N16:2 OSR 3 → N20:55 L 6

0086 PORTABLE EXHAUSTER
AND Bitwise AND
Source A S2:10 0400h<
Source B 512 512<
Dest N15:16 0000h<

0087 IF EXHAUSTER ON LINE, TIMER STARTS
NEQ Not Equal
Source A N15:16 0<
Source B 0 0<
TON Timer On Delay
Timer T4:71
Time Base 1.0
Preset 3<
Accum 0<
EN
DN

0088 3 SEC DELAY
T4:71 DN → N20:52 4
N16:2 OSR 13 → N20:56 L 4

0089 PUMP IN PRIME POSITION
N60:30 8 N60:30 6 → N20:32 0

LAD 5 - — Total Rungs in File = 105

0090 PUMP IN FLUSH POSITION
N60:30 8 — N60:30 6 — TON Timer On Delay, Timer T4:74, Time Base 1.0, Preset 3<, Accum 0< — EN, DN

0091 3 SEC DELAY
T4:74 DN — N20:32 1

0092 PUMP SHUTDOWN
N60:31 6 — N20:32 2

0093 PUMP PIT LEAK AND/OR TROUBLE ALARM
N20:24 6 | N20:24 7 — N20:32 3

0094 LEAK DETECTOR #1 LEAK AND/OR TROUBLE ALARM
N20:25 2 | N20:25 3 — N20:32 4

0095 HIGH FLUSH PRESSURE ALARM
N20:24 3 — N20:32 5

0096 HIGH RECIRC PRESSURE ALARM
N20:51 6 — N20:32 6

0097 N20:15 14 — N20:32 7

0098 N20:16 0 — N20:32 8

LAD 5 - --- Total Rungs in File = 105

INPUT TO WONDERWARE (FLASH FOR ALARM CONDITIONS)

0099

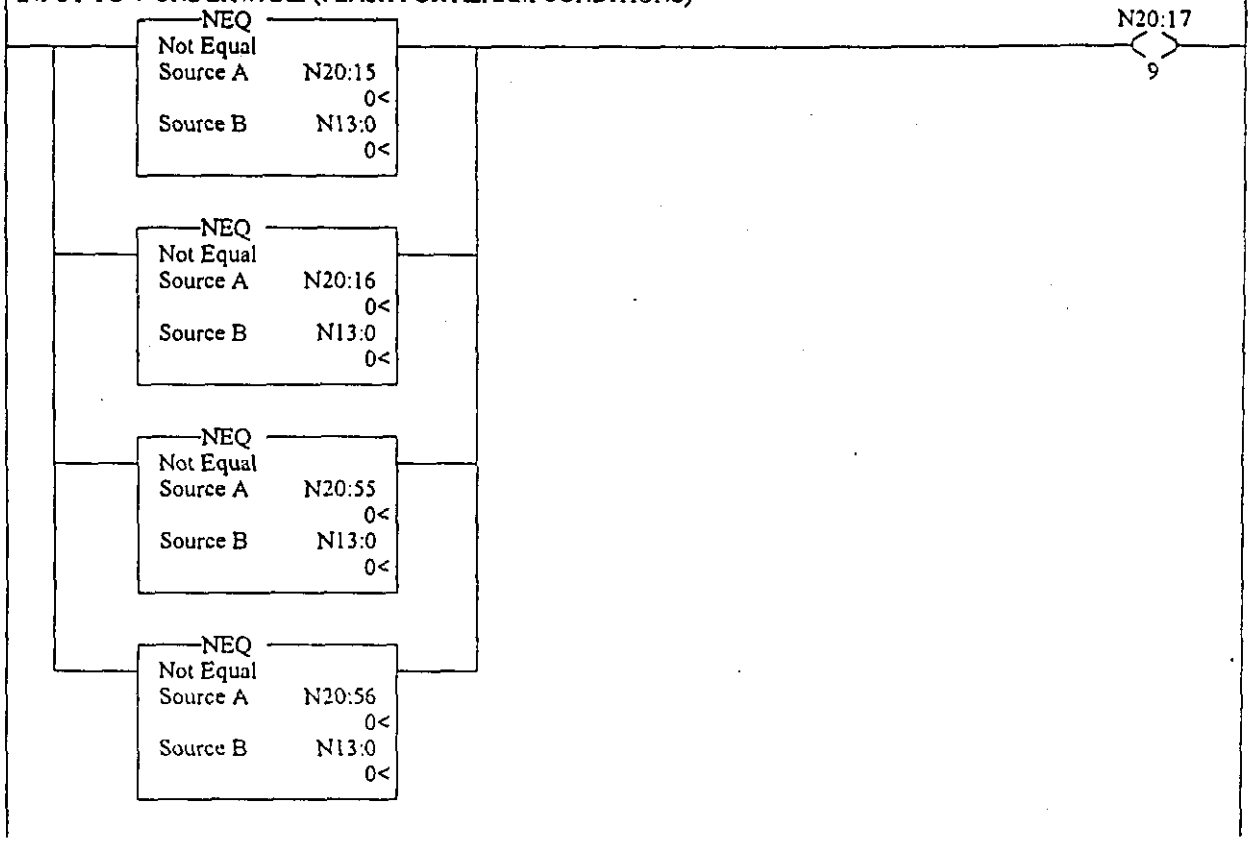

LAD 5 - --- Total Rungs in File = 105

INPUT TO WONDERWARE (CHANGE COLOR FOR ALARM CONDITIONS)

0100

NEQ Not Equal Source A N20:24 4096< Source B N13:0 0<

NEQ Not Equal Source A N20:25 64< Source B N13:0 0<

NEQ Not Equal Source A N20:51 0< Source B N13:0 0<

NEQ Not Equal Source A N20:52 0< Source B N13:0 0<

N20:17 13

PS-1, PS-1-1, PS-2(JFPT), JR-1(FLUSH), PIT LEAK,RFPT SIGNAL LOSS, DATA FAILURE, JFPT SIGNAL LOSS, RECIRC LOW FLOW, FGM, AND LEAK DET #1 ALARMS

0101

N20:24 1, N20:24 2, N20:24 3, N20:24 5, N20:24 6, N20:24 14, N20:24 15, N20:25 0

N20:25 5, N20:25 6, N20:25 2 — N20:17 1

PIT LEAK DET. TROUBLE, RECIRC HIGH PRESSURE, SUB-INTERLOCK, OTHER TANKS INTERLOCK, LEAK DET. 1 TROUBLE ALARMS

0102

N20:24 7, N20:51 6, N20:17 1, N20:17 2, N20:25 3 — N20:17 3

0103

RET Return

0104

END

LAD 6 - --- Total Rungs in File = 6

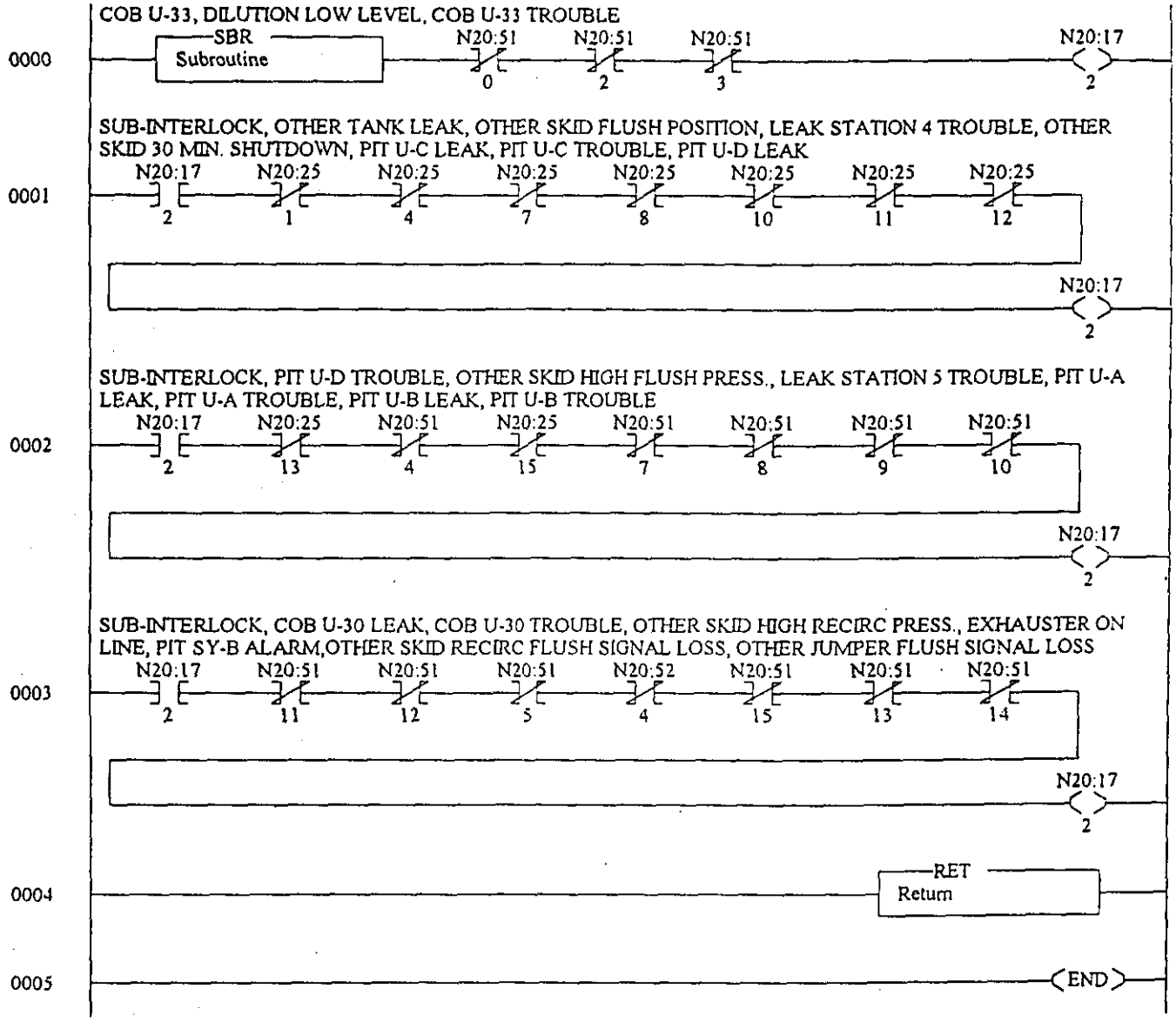

LAD 7 - -- Total Rungs in File = 22

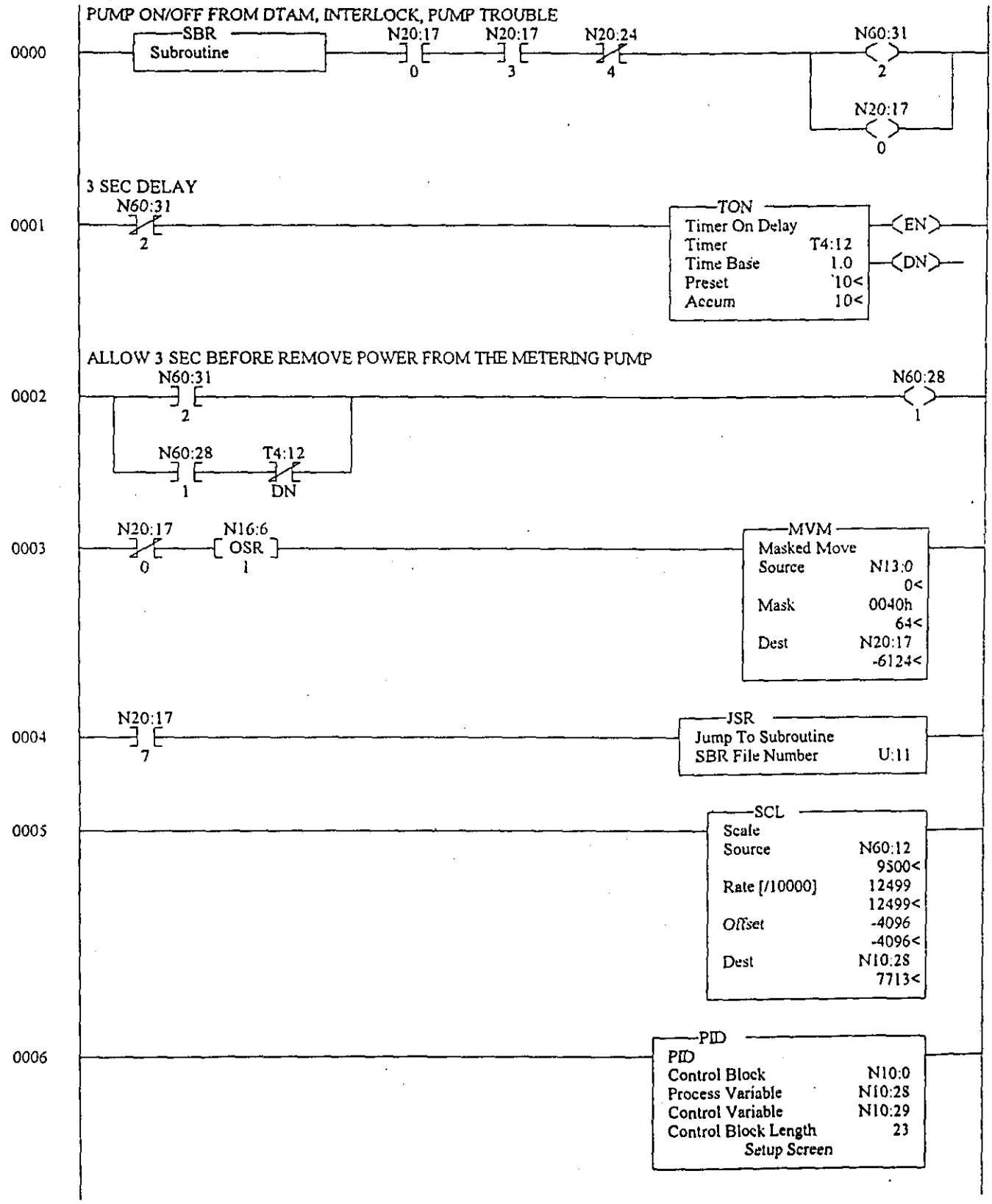

Page 1 - 1

Monday, September 27, 1999 - 08:16:18

LAD 7 - --- Total Rungs in File = 22

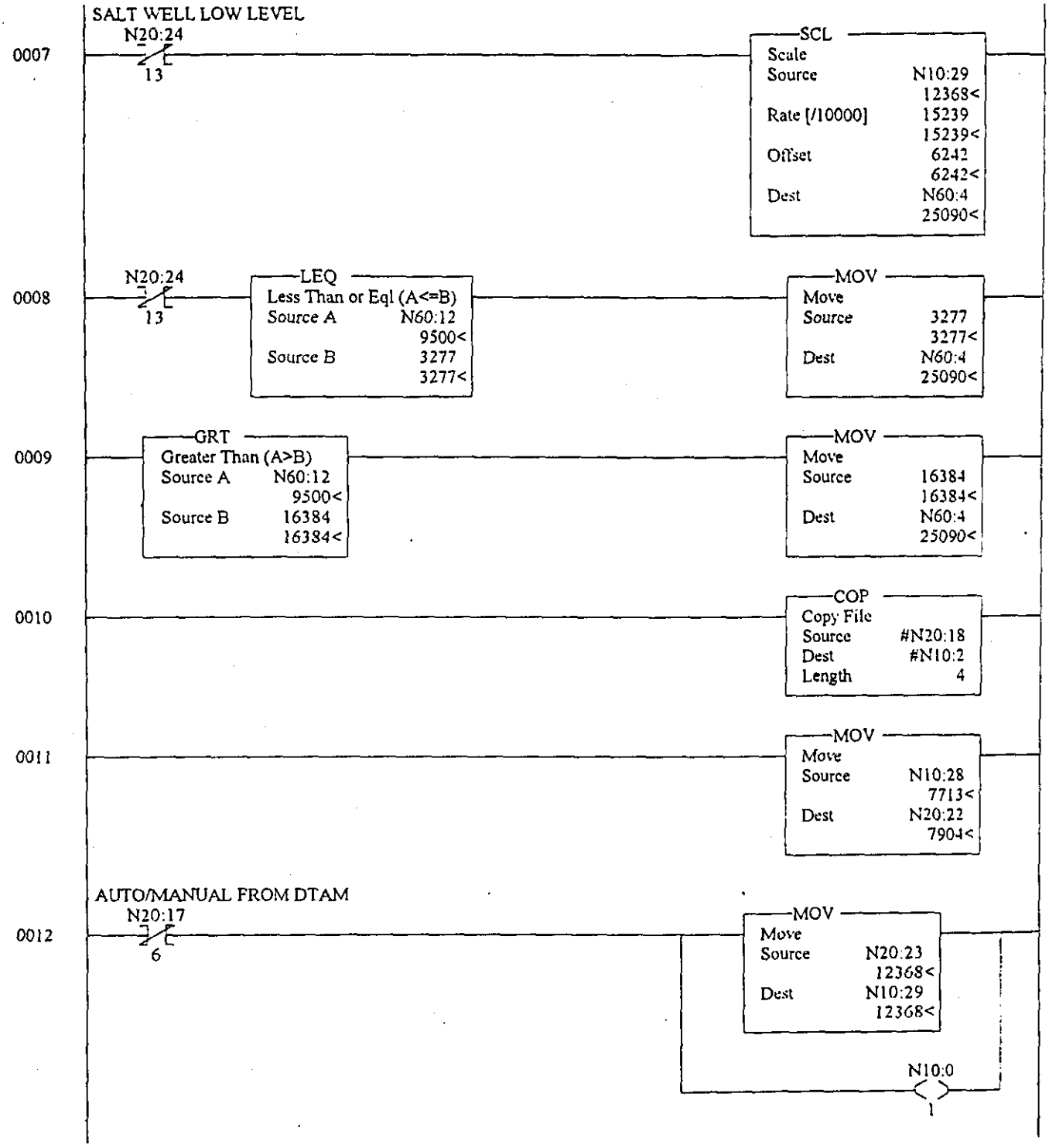

LAD 7 - — Total Rungs in File = 22

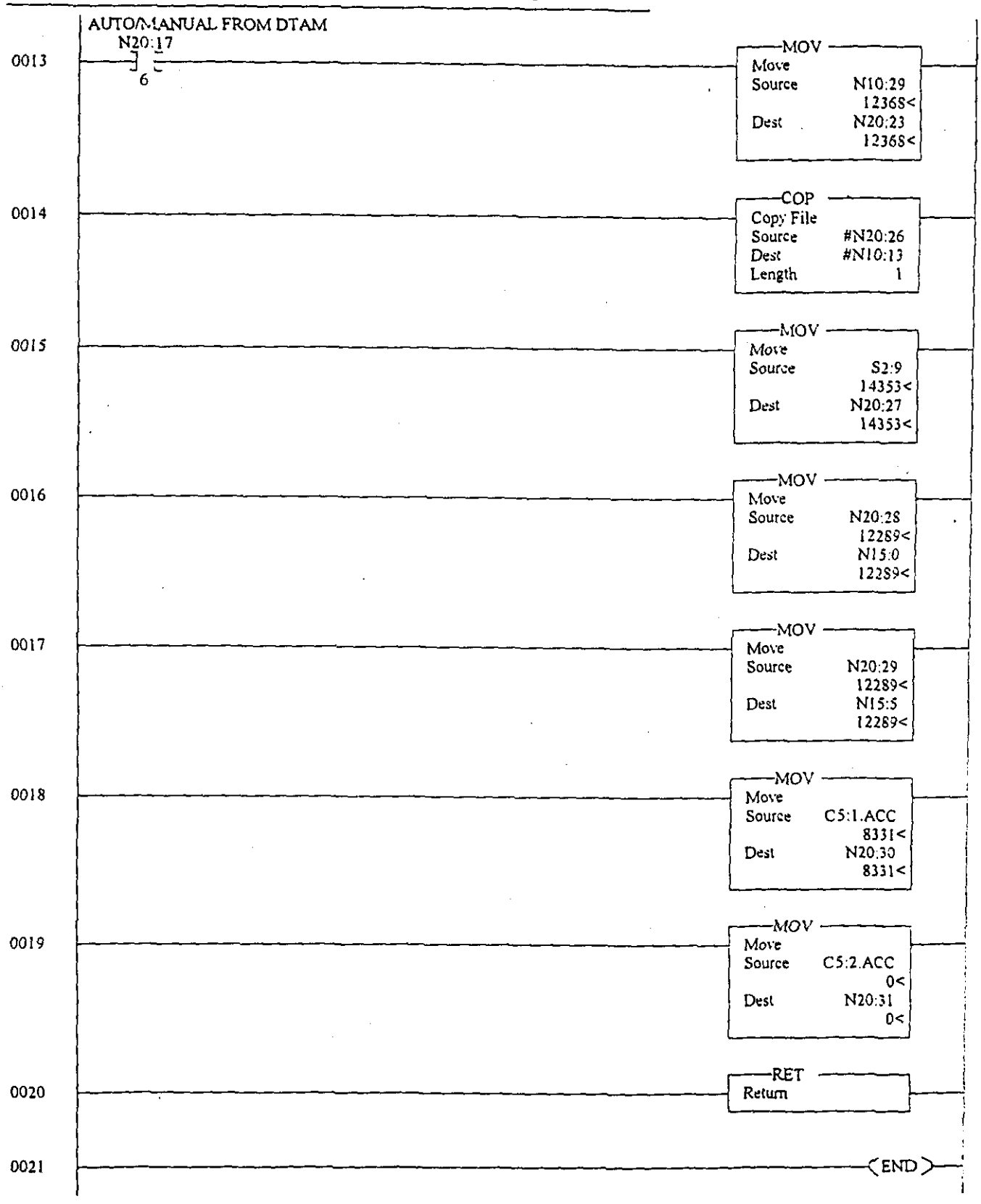

LAD 8 - --- Total Rungs in File = 6

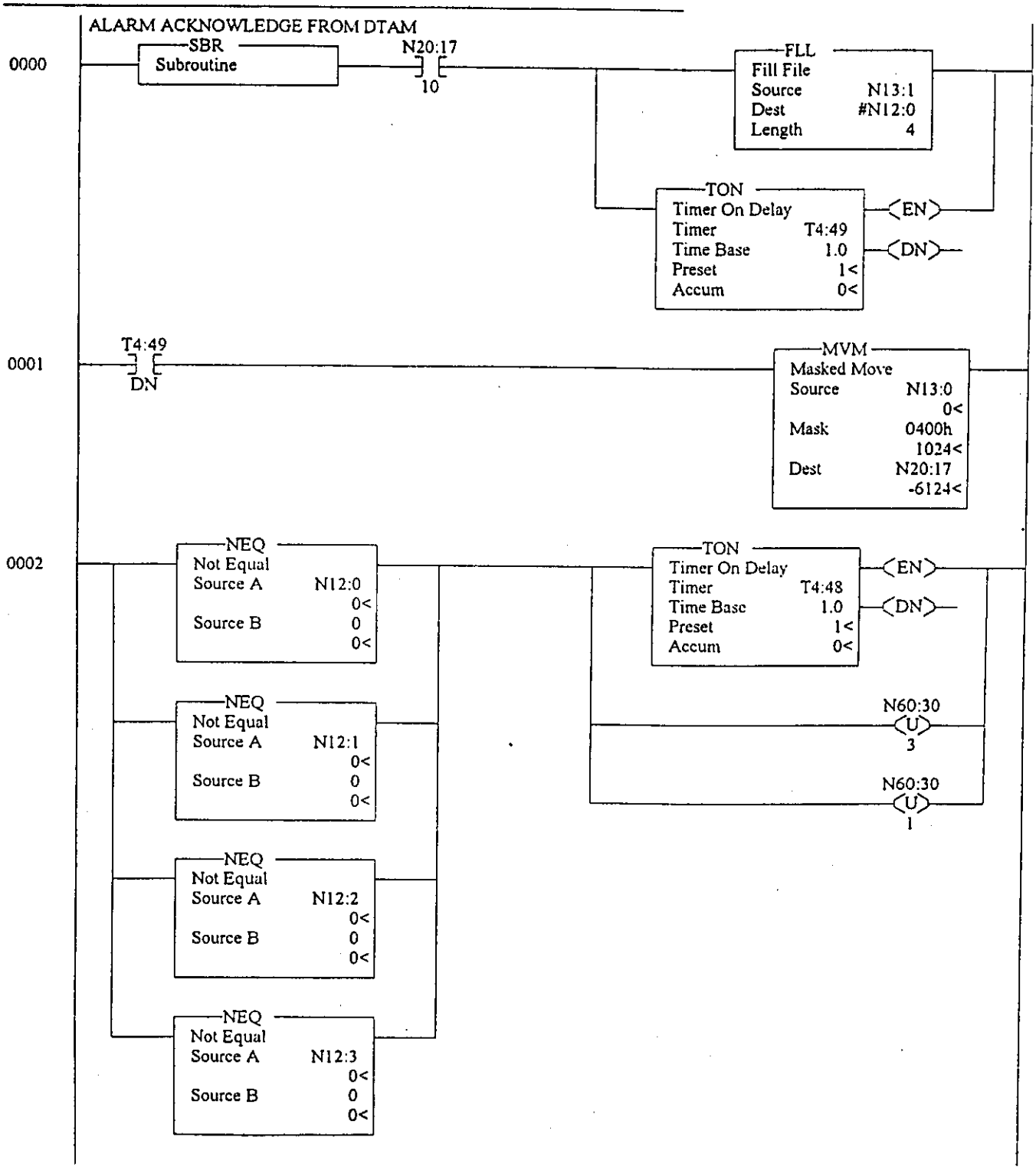

LAD 8 - -- Total Rungs in File = 6

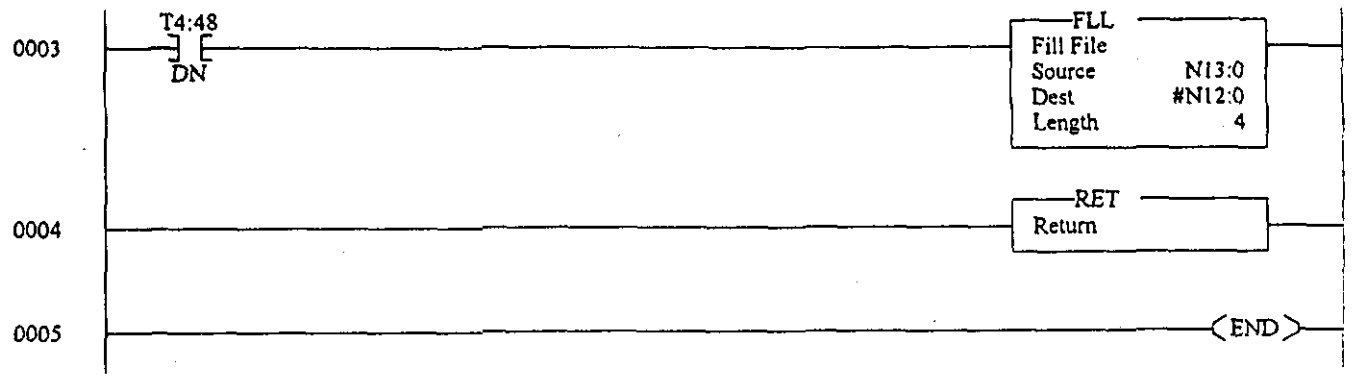

LAD 9 - --- Total Rungs in File = 6

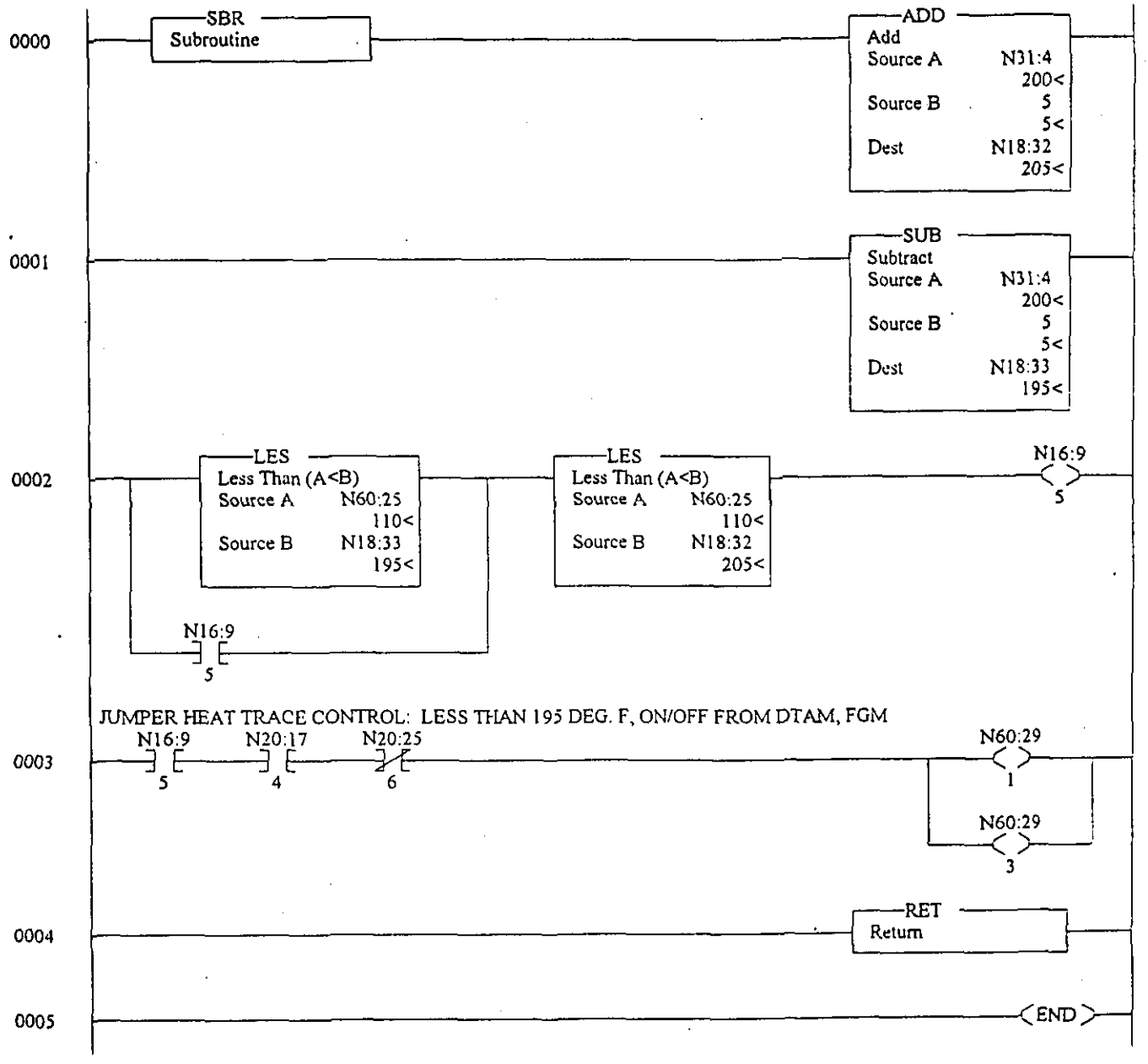

LAD 10 - -- Total Rungs in File = 11

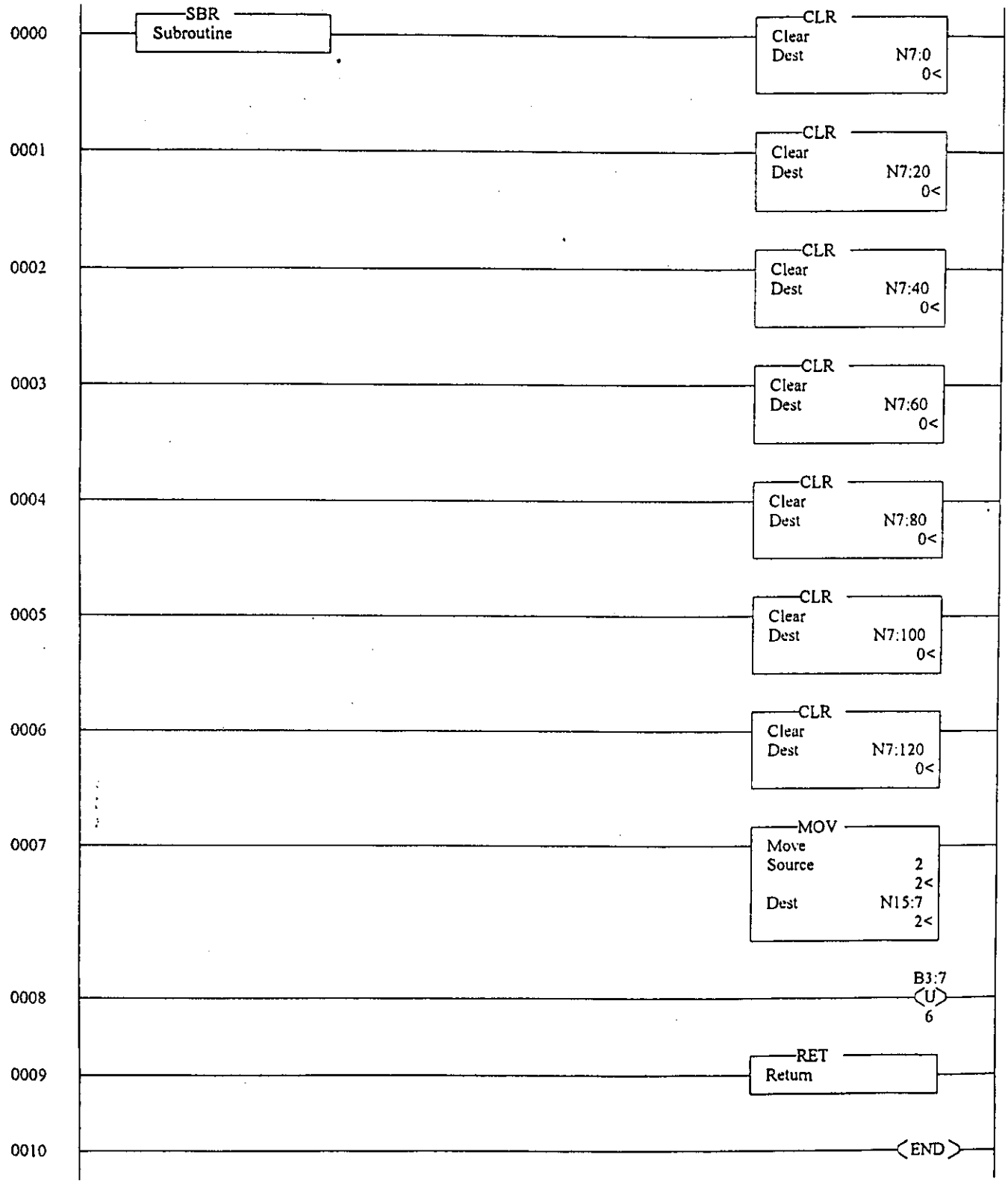

LAD 11 - — Total Rungs in File = 3

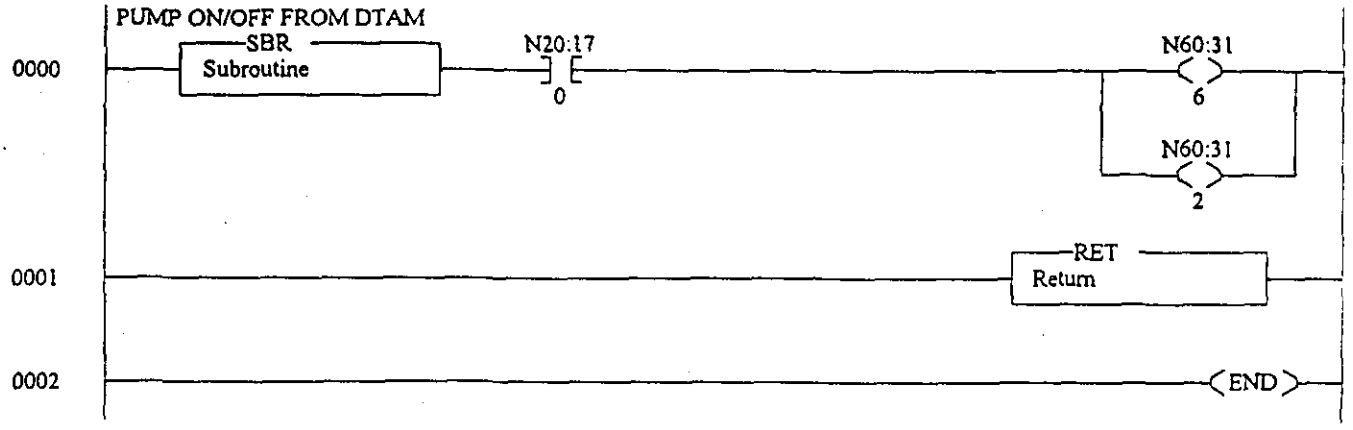

LAD 12 - -- Total Rungs in File = 10

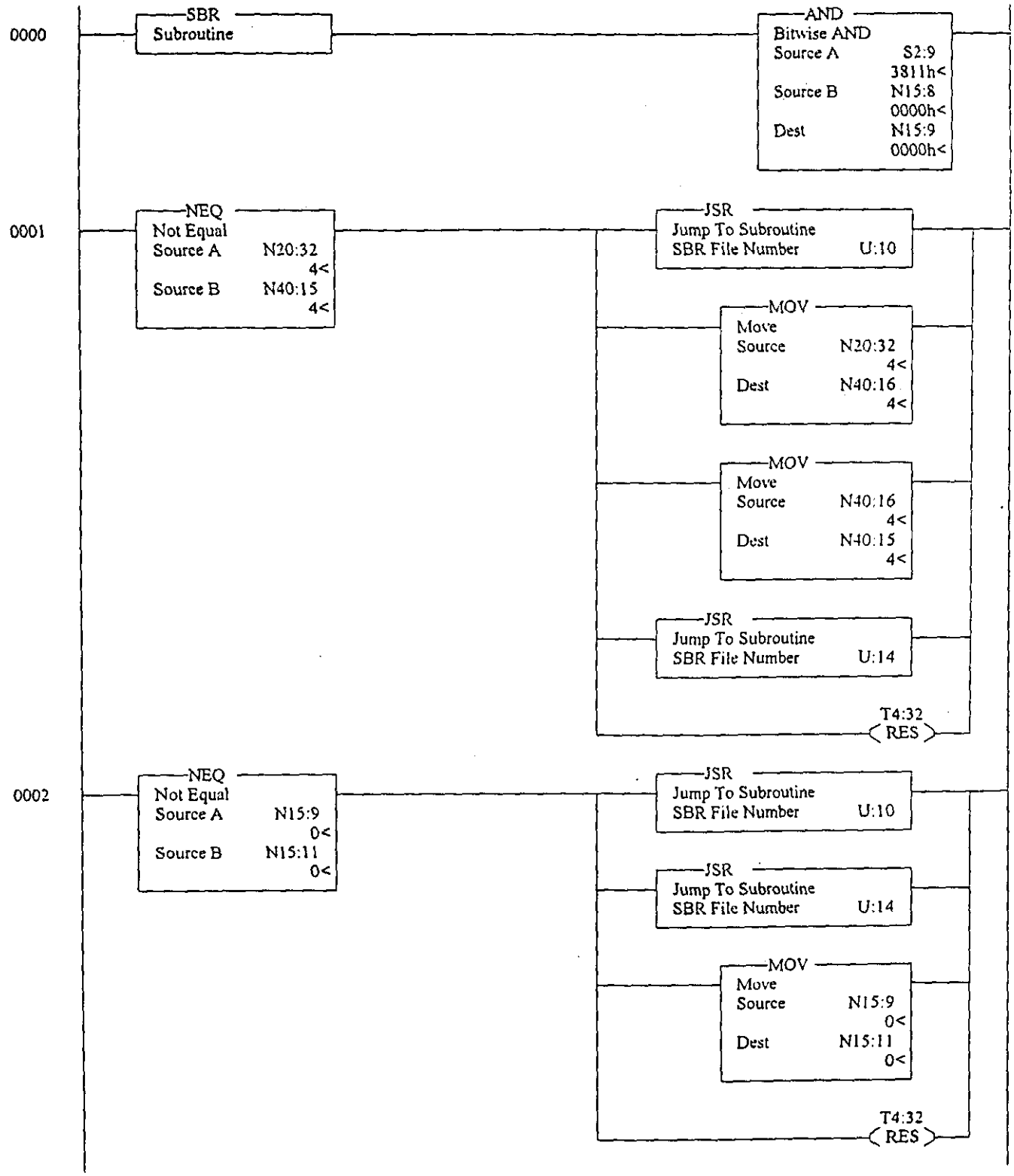

LAD 12 - --- Total Rungs in File = 10

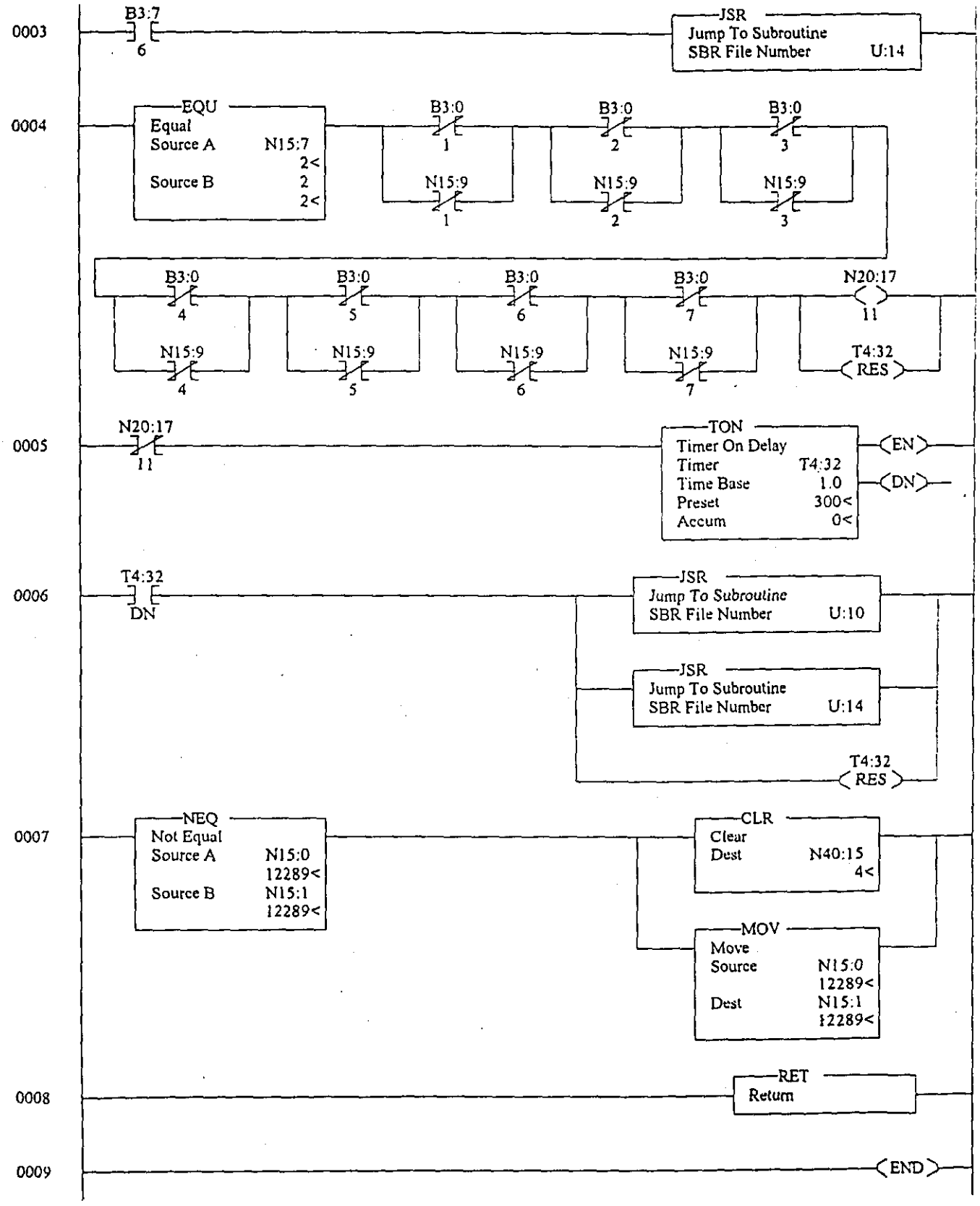

LAD 13 - --- Total Rungs in File = 6

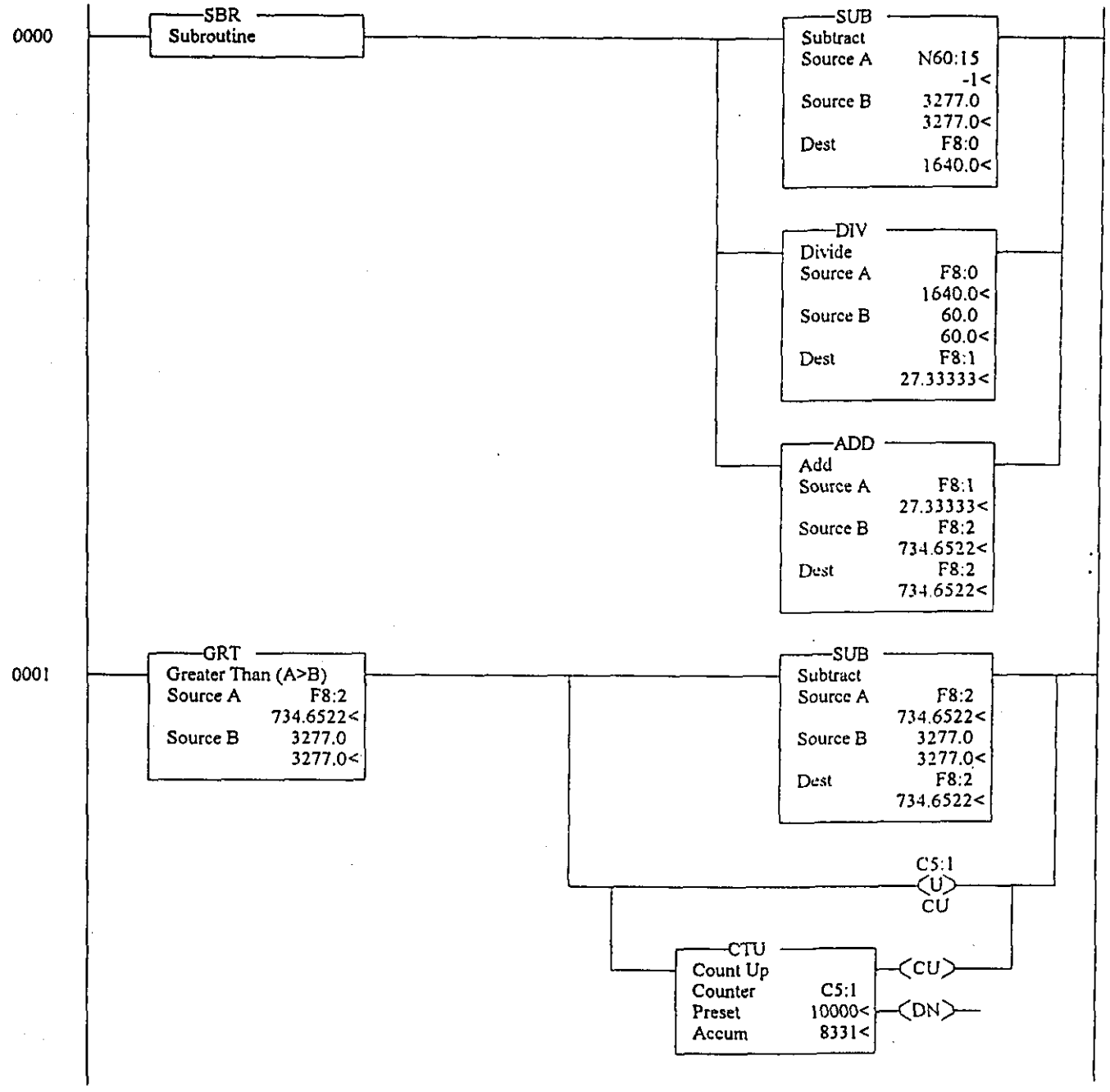

LAD 13 - --- Total Rungs in File = 6

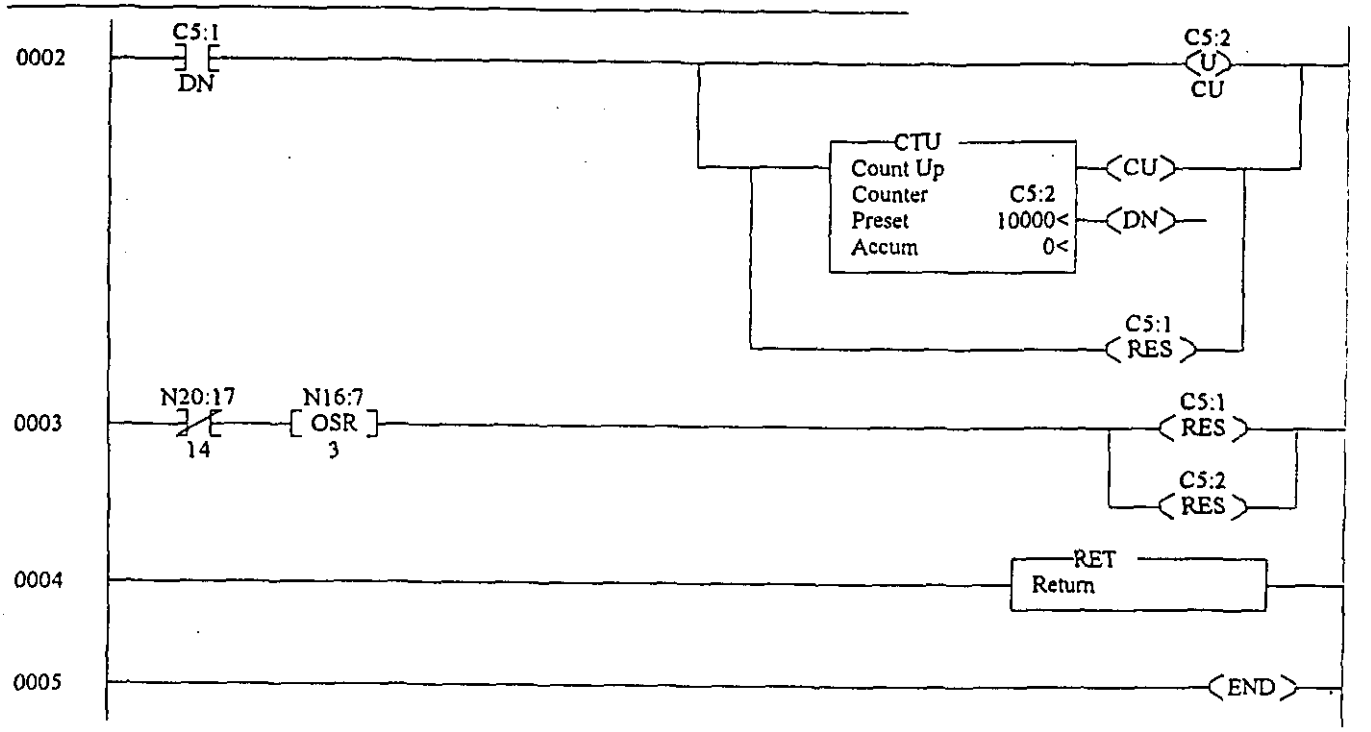

LAD 14 - --- Total Rungs in File = 11

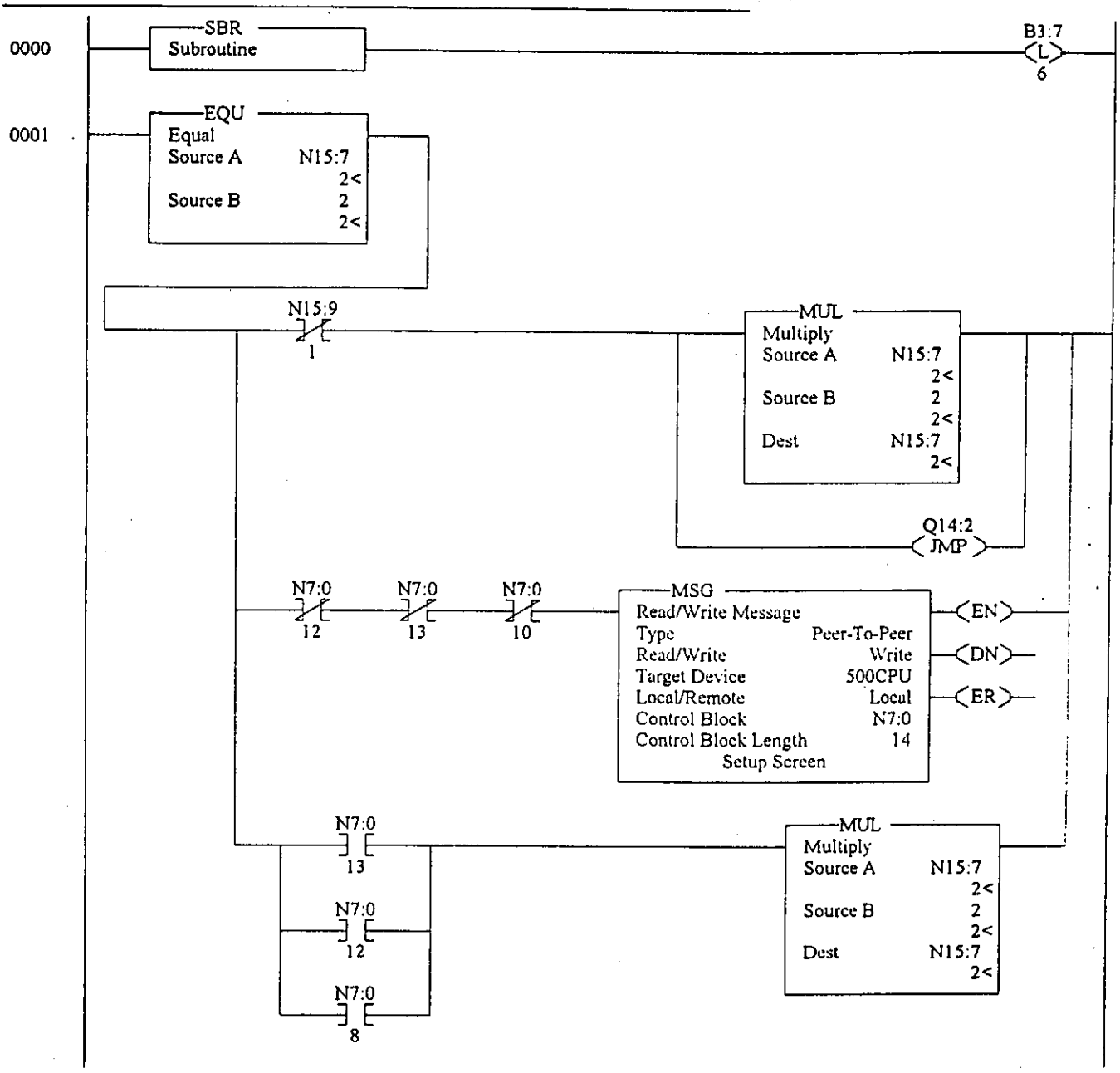

LAD 14 - --- Total Rungs in File = 11

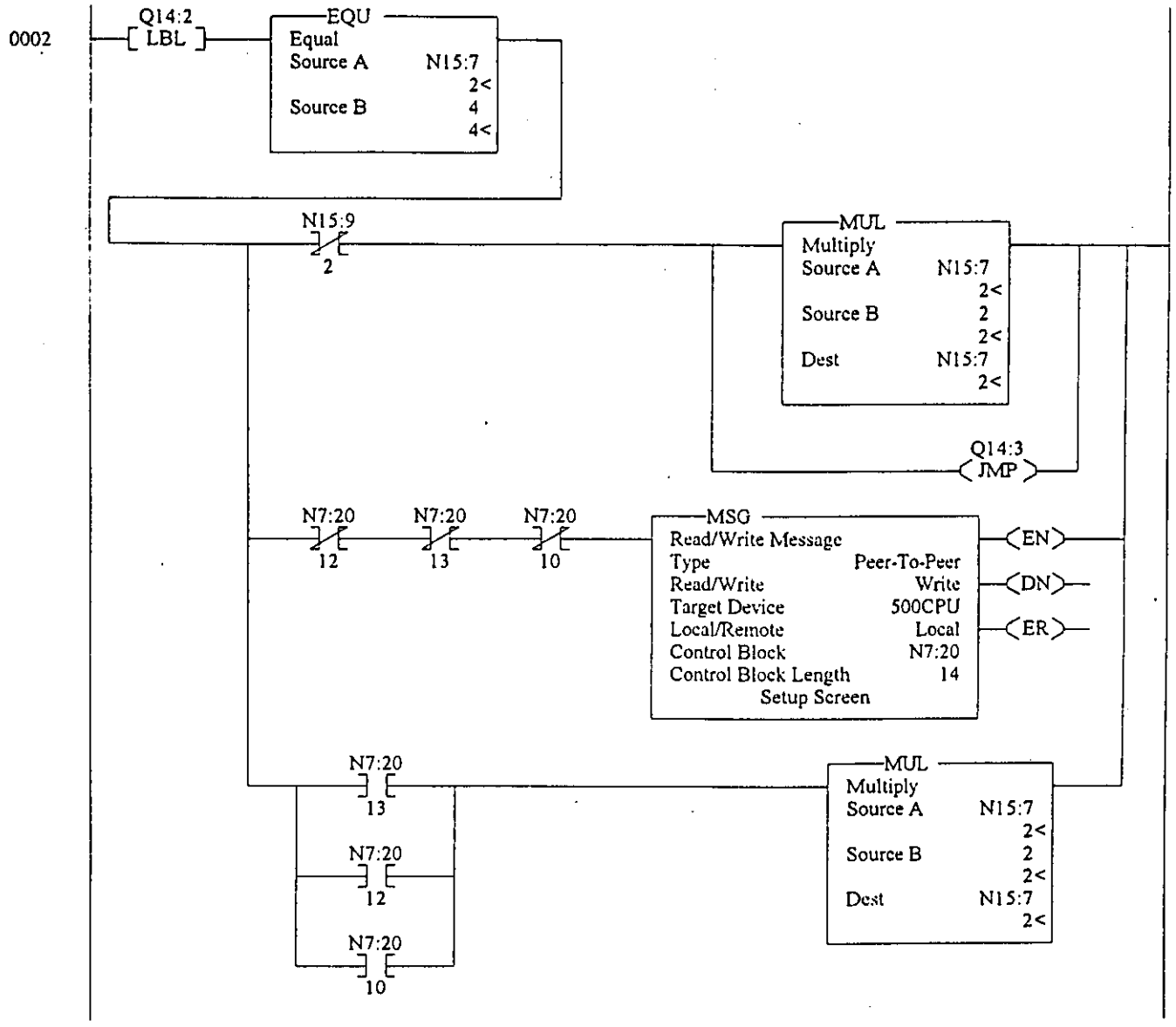

LAD 14 - — Total Rungs in File = 11

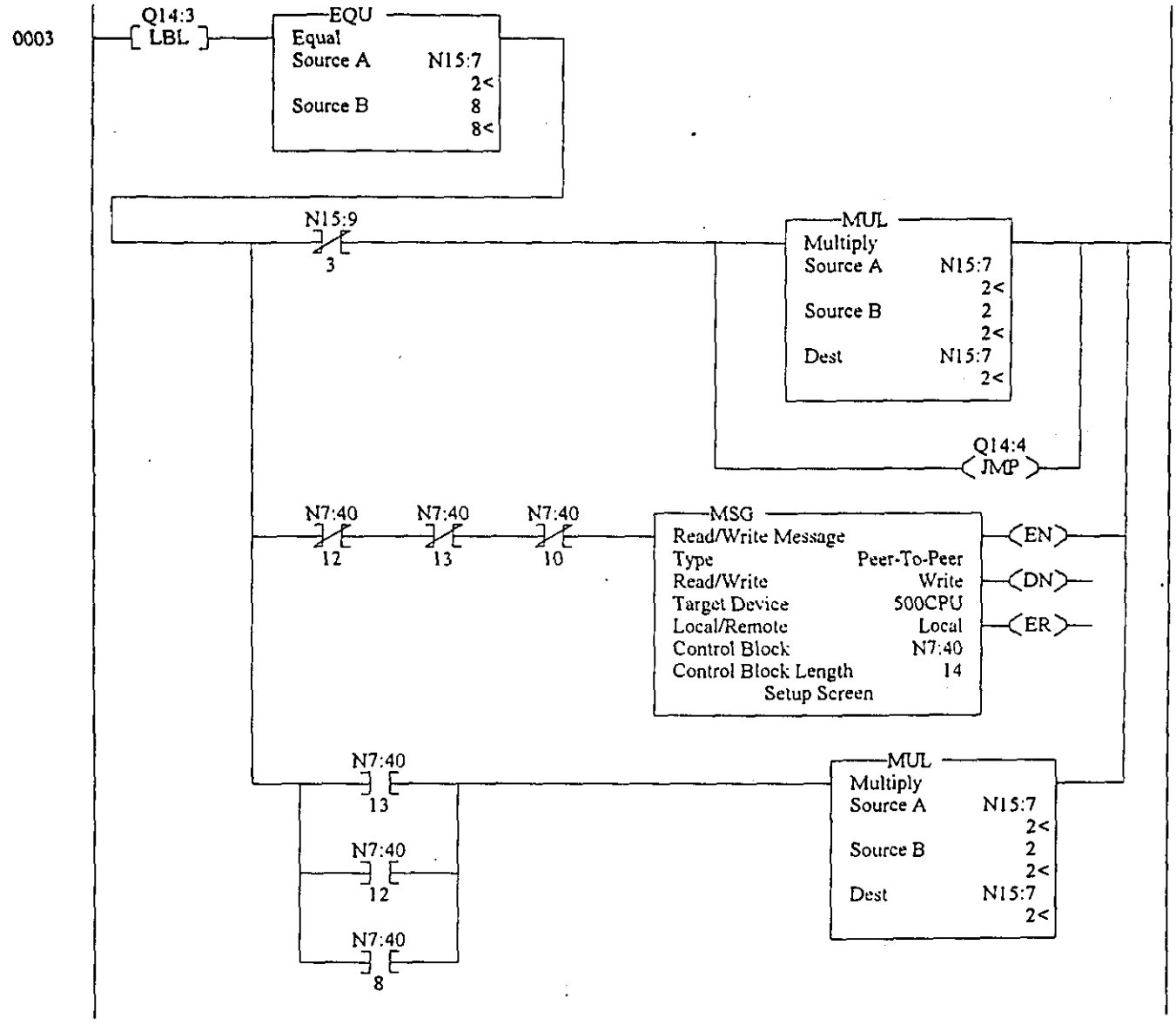

LAD 14 - --- Total Rungs in File = 11

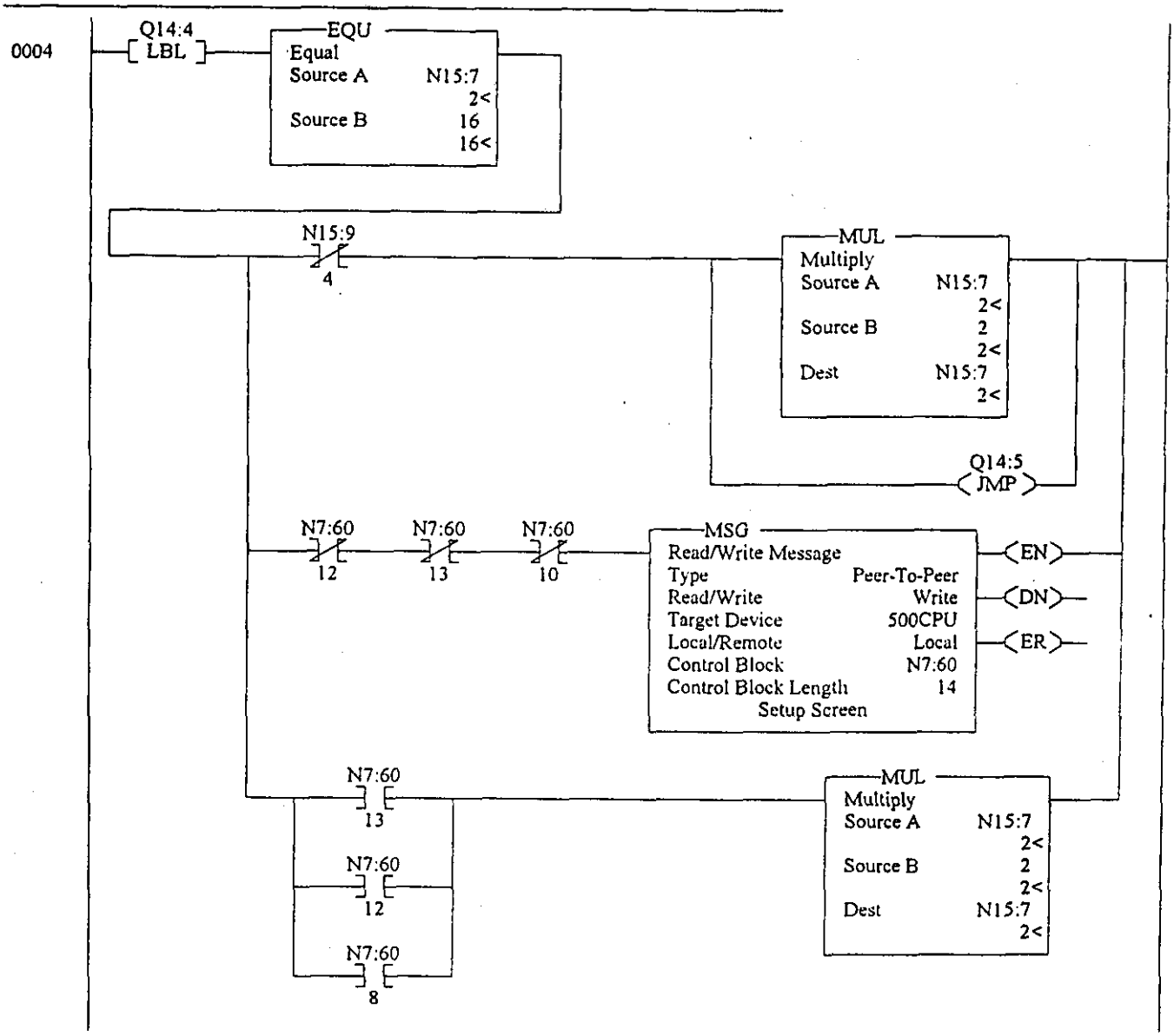

LAD 14 - --- Total Rungs in File = 11

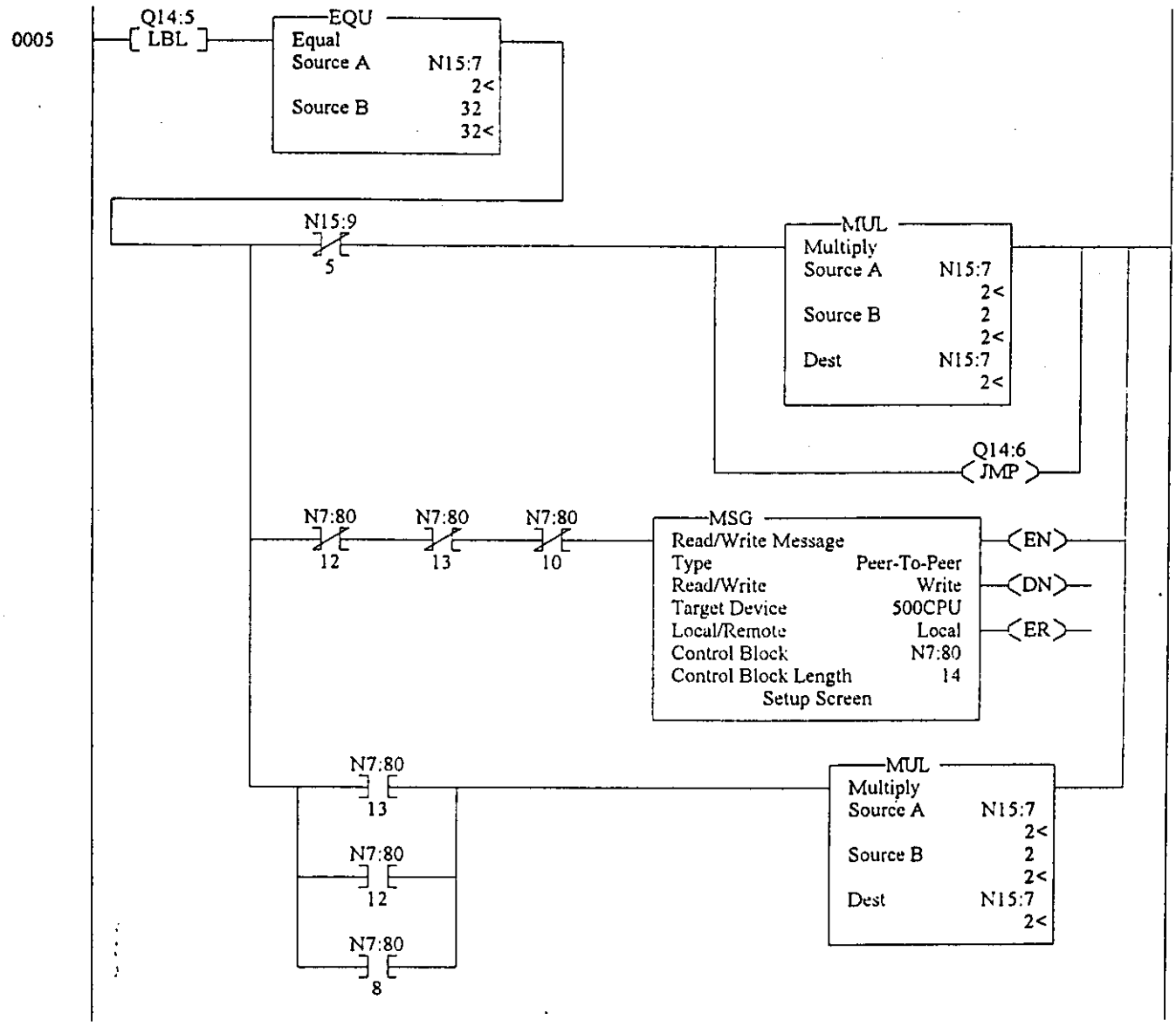

LAD 14 - --- Total Rungs in File = 11

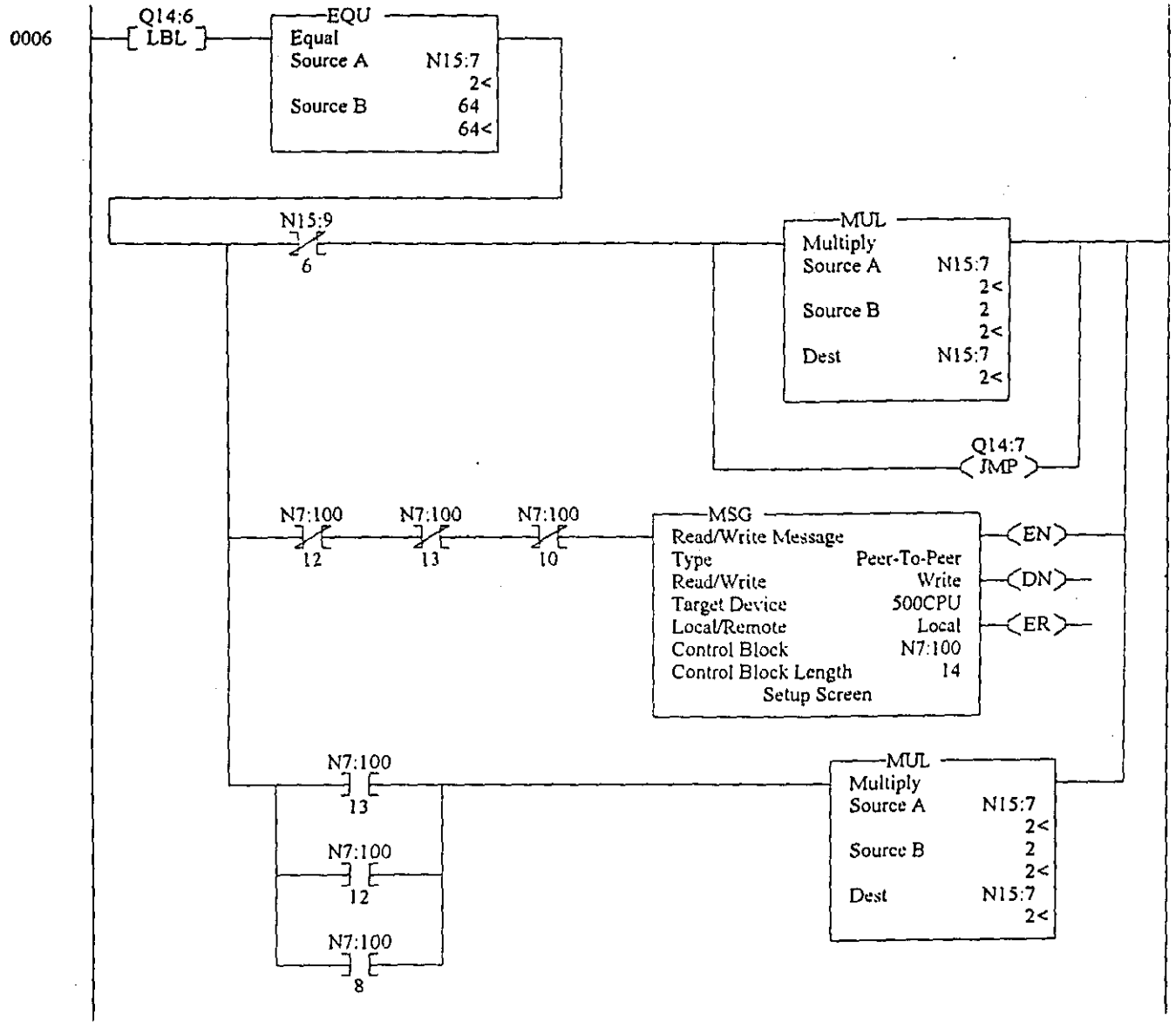

LAD 14 - — Total Rungs in File = 11

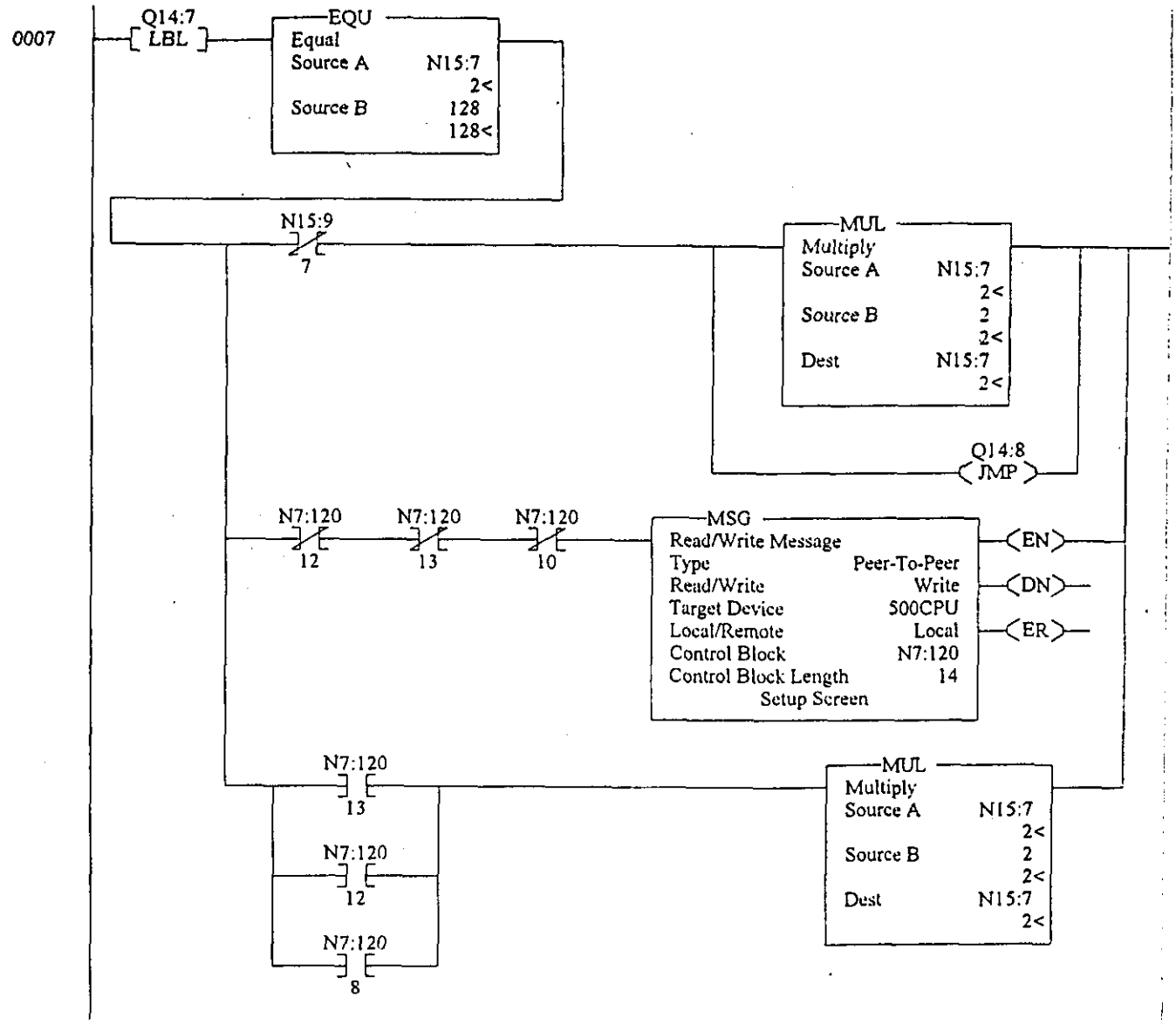

LAD 14 - — Total Rungs in File = 11

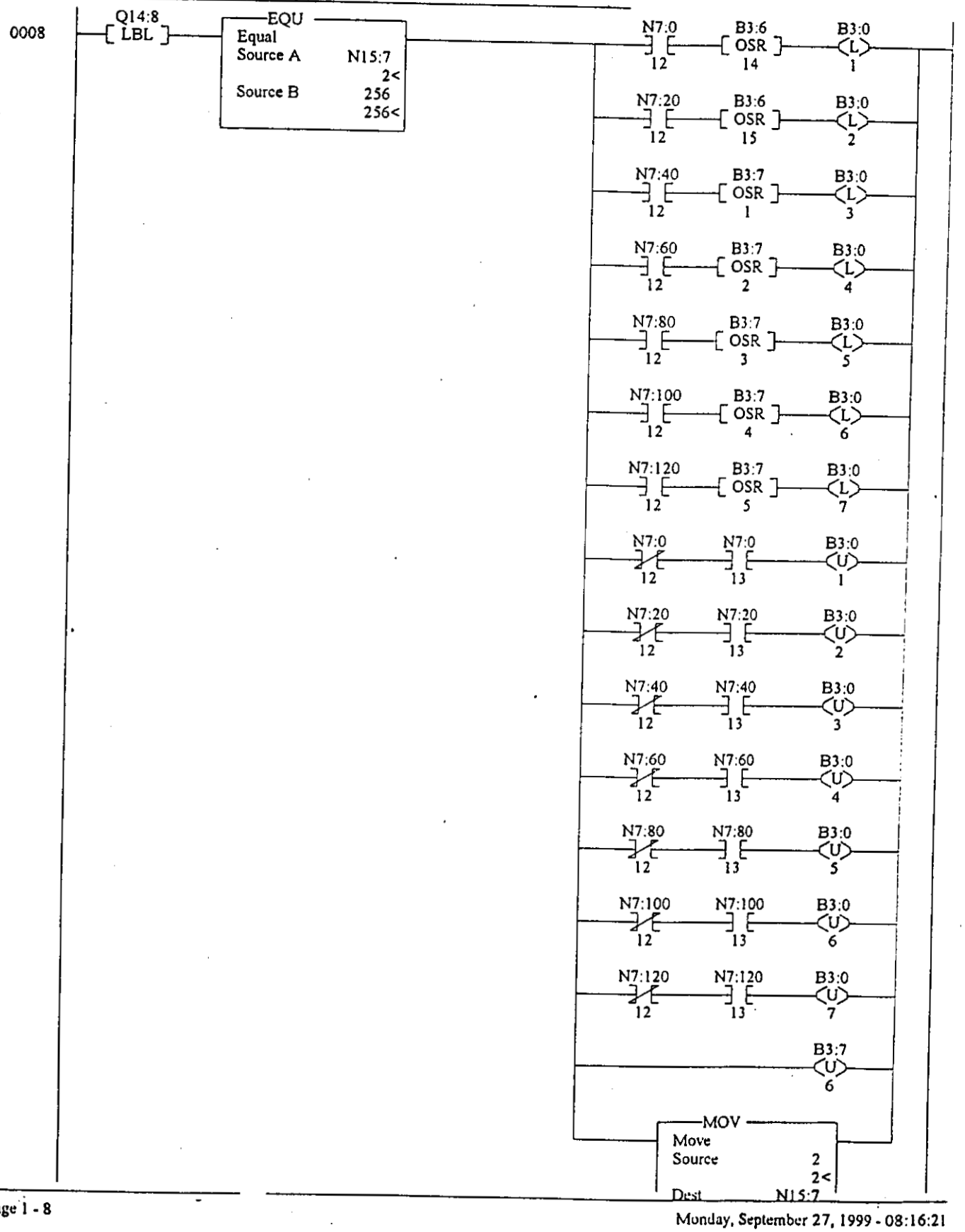

LAD 14 - --- Total Rungs in File = 11

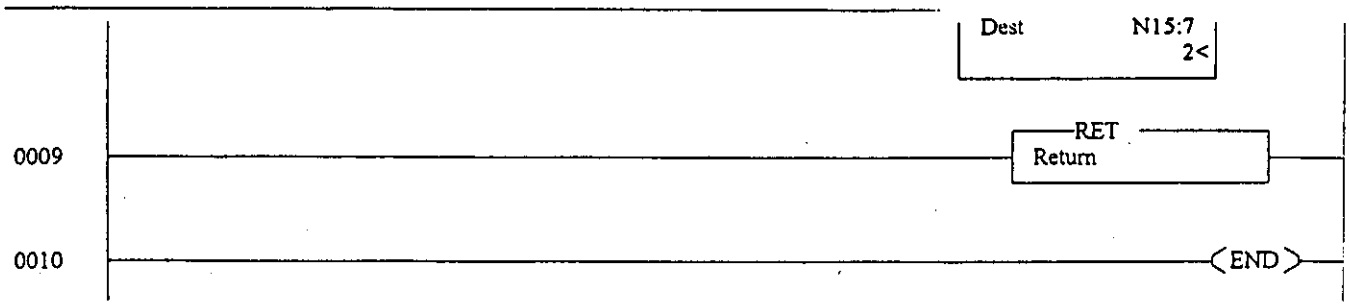

LAD 15 - --- Total Rungs in File = 16

U-102 SHUTDOWN AND JR-1 NOT IN PRIME POSITION, START 30 MIN TIMER

0000 — SBR Subroutine — N20:34 (2) — N20:34 (0) — TON Timer On Delay, Timer T4:34, Time Base 1.0, Preset 1800<, Accum 0< — EN, DN

EMERG SKID SHUTDOWN AND JR-1 NOT IN PRIME POSITION, START 30 MIN TIMER

0001 — N20:35 (2) — N20:35 (0) — TON Timer On Delay, Timer T4:35, Time Base 1.0, Preset 1800<, Accum 0< — EN, DN

U-103 SHUTDOWN AND JR-1 NOT IN PRIME POSITION, START 30 MIN TIMER

0002 — N20:36 (2) — N20:36 (0) — TON Timer On Delay, Timer T4:36, Time Base 1.0, Preset 1800<, Accum 0< — EN, DN

U-105 SHUTDOWN AND JR-1 NOT IN PRIME POSITION, START 30 MIN TIMER

0003 — N20:37 (2) — N20:37 (0) — TON Timer On Delay, Timer T4:37, Time Base 1.0, Preset 1800<, Accum 0< — EN, DN

U-106 SHUTDOWN AND JR-1 NOT IN PRIME POSITION, START 30 MIN TIMER

0004 — N20:38 (2) — N20:38 (0) — TON Timer On Delay, Timer T4:38, Time Base 1.0, Preset 1800<, Accum 0< — EN, DN

U-107 SHUTDOWN AND JR-1 NOT IN PRIME POSITION, START 30 MIN TIMER

0005 — N20:39 (2) — N20:39 (0) — TON Timer On Delay, Timer T4:39, Time Base 1.0, Preset 1800<, Accum 0< — EN, DN

U-108 SHUTDOWN AND JR-1 NOT IN PRIME POSITION, START 30 MIN TIMER

0006 — N20:40 (2) — N20:40 (0) — TON Timer On Delay, Timer T4:40, Time Base 1.0, Preset 1800<, Accum 0< — EN, DN

LAD 15 - --- Total Rungs in File = 16

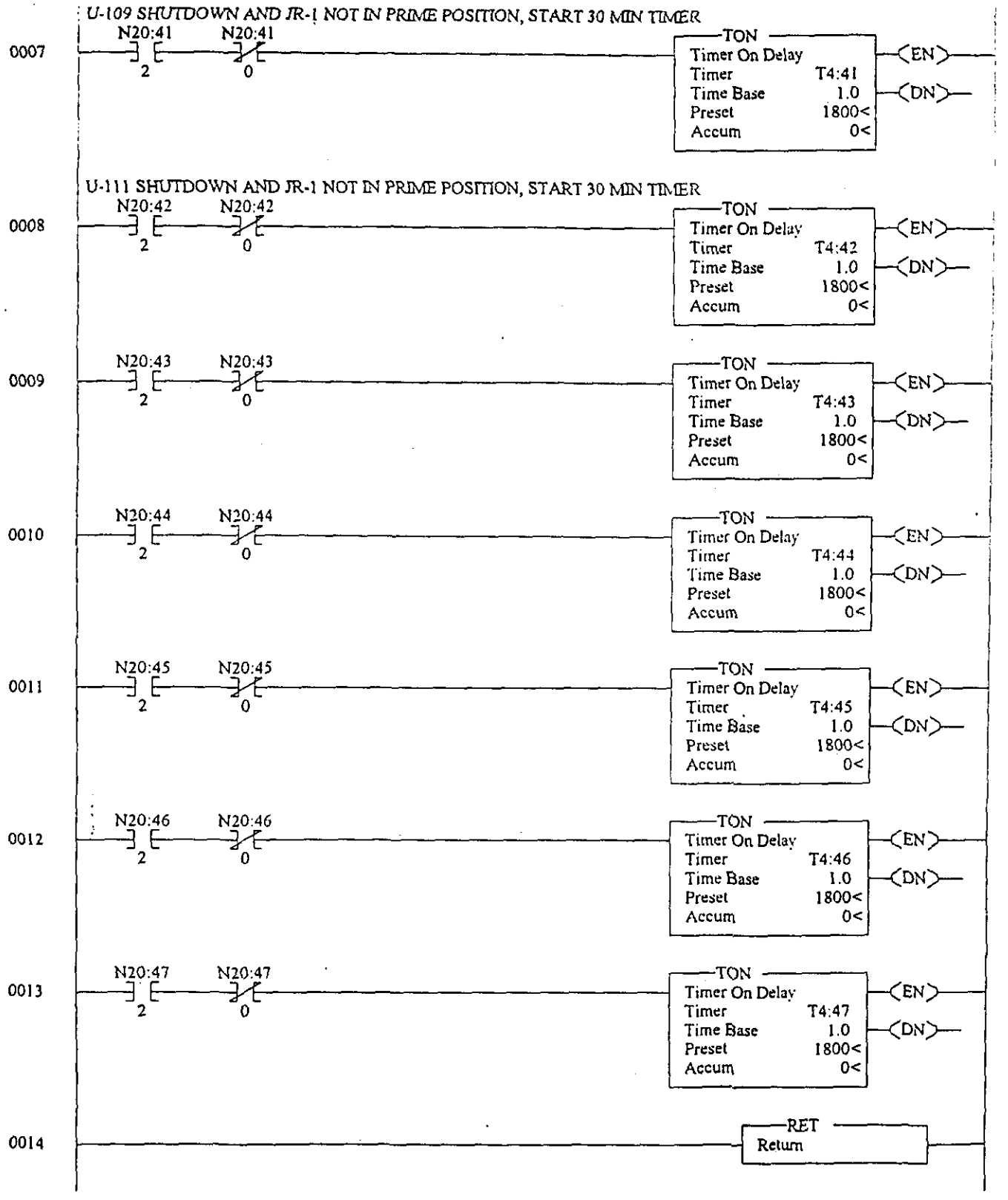

LAD 15 - — Total Rungs in File = 16

0015 —(END)—

LAD 16 - — Total Rungs in File = 6

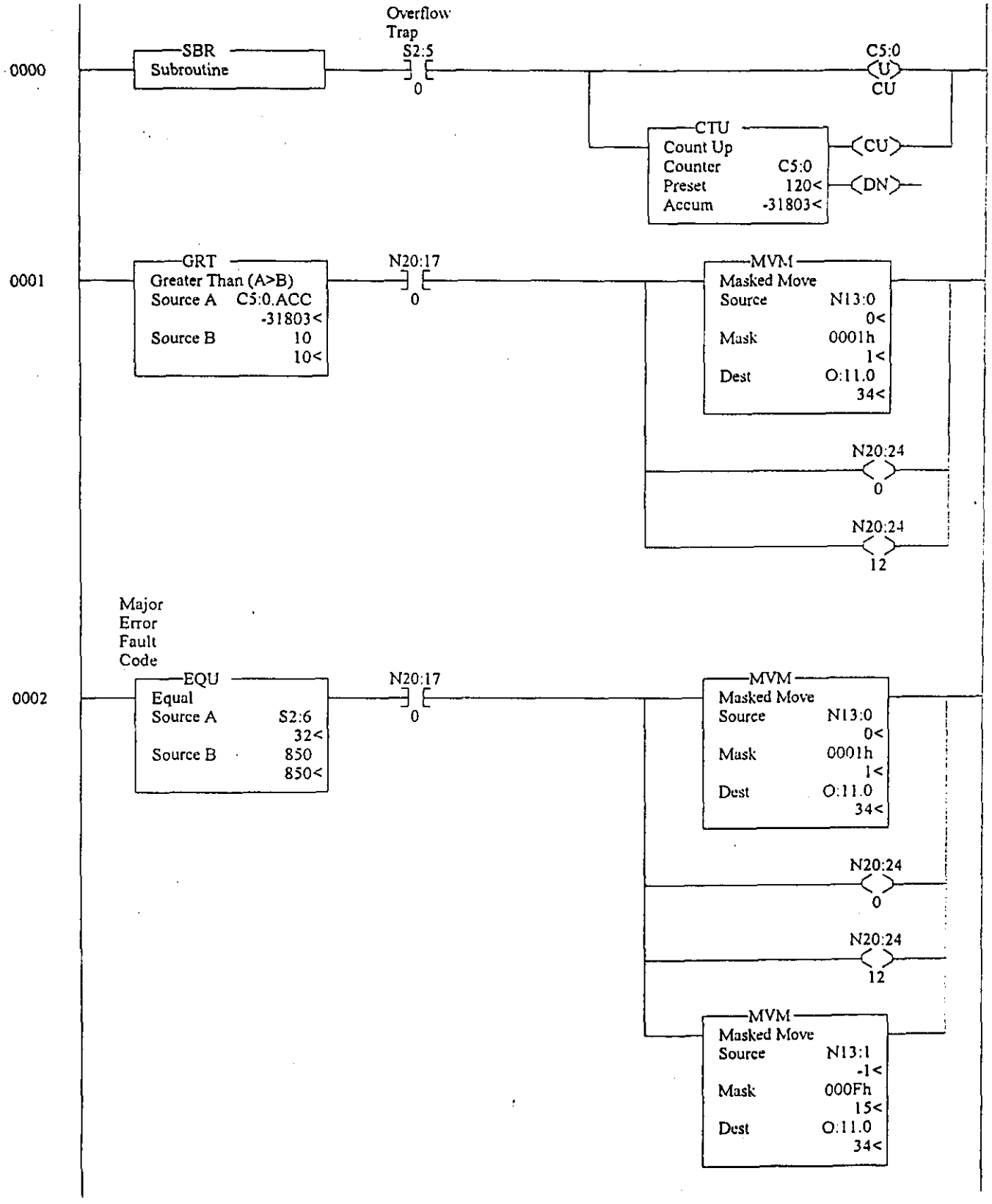

LAD 16 - — Total Rungs in File = 6

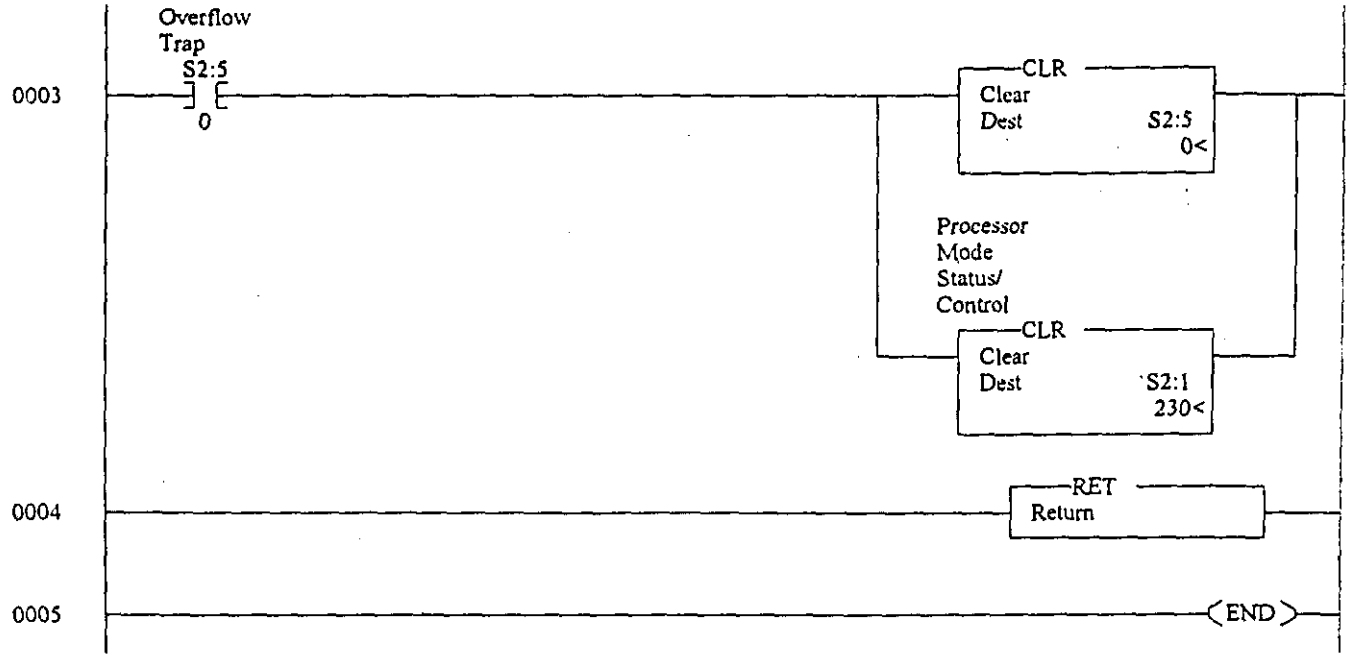

LAD 17 - --- Total Rungs in File = 65

0000	PS-1 N12:0 1	N20:15 U 1
0001	PS-1-1 N12:0 2	N20:15 U 2
0002	PS-2 (JFPT) N12:0 3	N20:15 U 3
0003	PUMP TROUBLE N12:0 4	N20:15 U 4
0004	JR-1 FLUSH POSITION N12:0 5	N20:15 U 5
0005	PIT LEAK N12:0 6	N20:15 U 6
0006	PIT LEAK DET. TROUBLE N12:0 7	N20:15 U 7
0007	JUMPER HEAT TRACE TROUBLE N12:0 8	N20:15 U 8
0008	WATER TANK LOW LEVEL N12:0 9	N20:15 U 9
0009	INSTR. ENCL. HIGH TEMP. N12:0 10	N20:15 U 10
0010	AIR COMPR. CAB. HIGH TEMP. N12:0 11	N20:15 U 11
0011	PUMP SHUTDOWN N12:0 12	N20:15 U 12

LAD 17 - --- Total Rungs in File = 65

0012 SALTWELL LOW LEVEL
N12:0/13 — N20:15/13 (U)

0013 RECIRC FLUSH PRESS. SIGNAL LOSS
N12:0/14 — N20:15/14 (U)

0014 DATA FAILURE
N12:0/15 — N20:15/15 (U)

0015 JUMPER FLUSH PRESS. SIGNAL LOSS
N12:1/0 — N20:16/0 (U)

0016 OTHER U-FARM LEAK DET. ALARMS
N12:1/1 — N20:16/1 (U)

0017 LEAK DET. 1
N12:1/2 — N20:16/2 (U)

0018 LEAK DET. 1 TROUBLE
N12:1/3 — N20:16/3 (U)

0019 OTHER U-FARM SKIDS IN FLUSH POS.
N12:1/4 — N20:16/4 (U)

0020 RECIRC LOW FLOW
N12:1/5 — N20:16/5 (U)

0021 FGM
N12:1/6 — N20:16/6 (U)

0022 LEAK DET. STATION 4 TROUBLE
N12:1/7 — N20:16/7 (U)

0023 ANY OTHER U-FARM SKID SHUTDOWN
N12:1/8 — N20:16/8 (U)

0024 N12:1/9 — N20:16/9 (U)

LAD 17 - — Total Rungs in File = 65

0025	VALVE PIT U-C LEAK N12:1 / 10	N20:16 (U) 10
0026	VALVE PIT U-C TROUBLE N12:1 / 11	N20:16 (U) 11
0027	VALVE PIT U-D LEAK N12:1 / 12	N20:16 (U) 12
0028	VALVE PIT U-D TROUBLE N12:1 / 13	N20:16 (U) 13
0029	N12:1 / 14	N20:16 (U) 14
0030	LEAK DET STATION 5 TROUBLE N12:1 / 15	N20:16 (U) 15
0031	N12:0 / 0	N20:15 (U) 0
0032	COB U-33 LEAK N12:2 / 0	N20:55 (U) 0
0033	DILUTION TANK LOW LEVEL N12:2 / 2	N20:55 (U) 2
0034	COB U-33 TROUBLE N12:2 / 3	N20:55 (U) 3
0035	OTHER U-FARM SKIDS HIGH FLUSH PRESS. N12:2 / 4	N20:55 (U) 4
0036	OTHER U-FARM SKIDS HIGH RECIRC PRESS. N12:2 / 5	N20:55 (U) 5
0037	RECIRC HIGH PRESS. N12:2 / 6	N20:55 (U) 6

0038 VALVE PIT U-A LEAK
N12:2 7 — N20:55 (U) 7

0039 VALVE PIT U-A TROUBLE
N12:2 8 — N20:55 (U) 8

0040 VALVE PIT U-B LEAK
N12:2 9 — N20:55 (U) 9

0041 VALVE PIT U-B TROUBLE
N12:2 10 — N20:55 (U) 10

0042 COB U-30 LEAK
N12:2 11 — N20:55 (U) 11

0043 COB U-30 TROUBLE
N12:2 12 — N20:55 (U) 12

0044 OTHER SKID RECIRC FLUSH SIGNAL LOSS
N12:2 13 — N20:55 (U) 13

0045 OTHER SKID JUMPER FLUSH SIGNAL LOSS
N12:2 14 — N20:55 (U) 14

0046 VALVE PIT SY-B LEAK ALARM
N12:2 15 — N20:55 (U) 15

0047 N12:3 0 — N20:56 (U) 0

0048 N12:3 1 — N20:56 (U) 1

0049 N12:3 2 — N20:56 (U) 2

0050 N12:3 3 — N20:56 (U) 3

LAD 17 - --- Total Rungs in File = 65

EXHAUSTER

0051	N12:3 4	N20:56 (U) 4
0052	N12:3 5	N20:56 (U) 5
0053	N12:3 6	N20:56 (U) 6
0054	N12:3 7	N20:56 (U) 7
0055	N12:3 8	N20:56 (U) 8
0056	N12:3 9	N20:56 (U) 9
0057	N12:3 10	N20:56 (U) 10
0058	N12:3 11	N20:56 (U) 11
0059	N12:3 12	N20:56 (U) 12
0060	N12:3 13	N20:56 (U) 13
0061	N12:3 14	N20:56 (U) 14
0062	N12:3 15	N20:56 (U) 15
0063	RET Return	
0064	(END)	

LAD 18 - — Total Rungs in File = 70

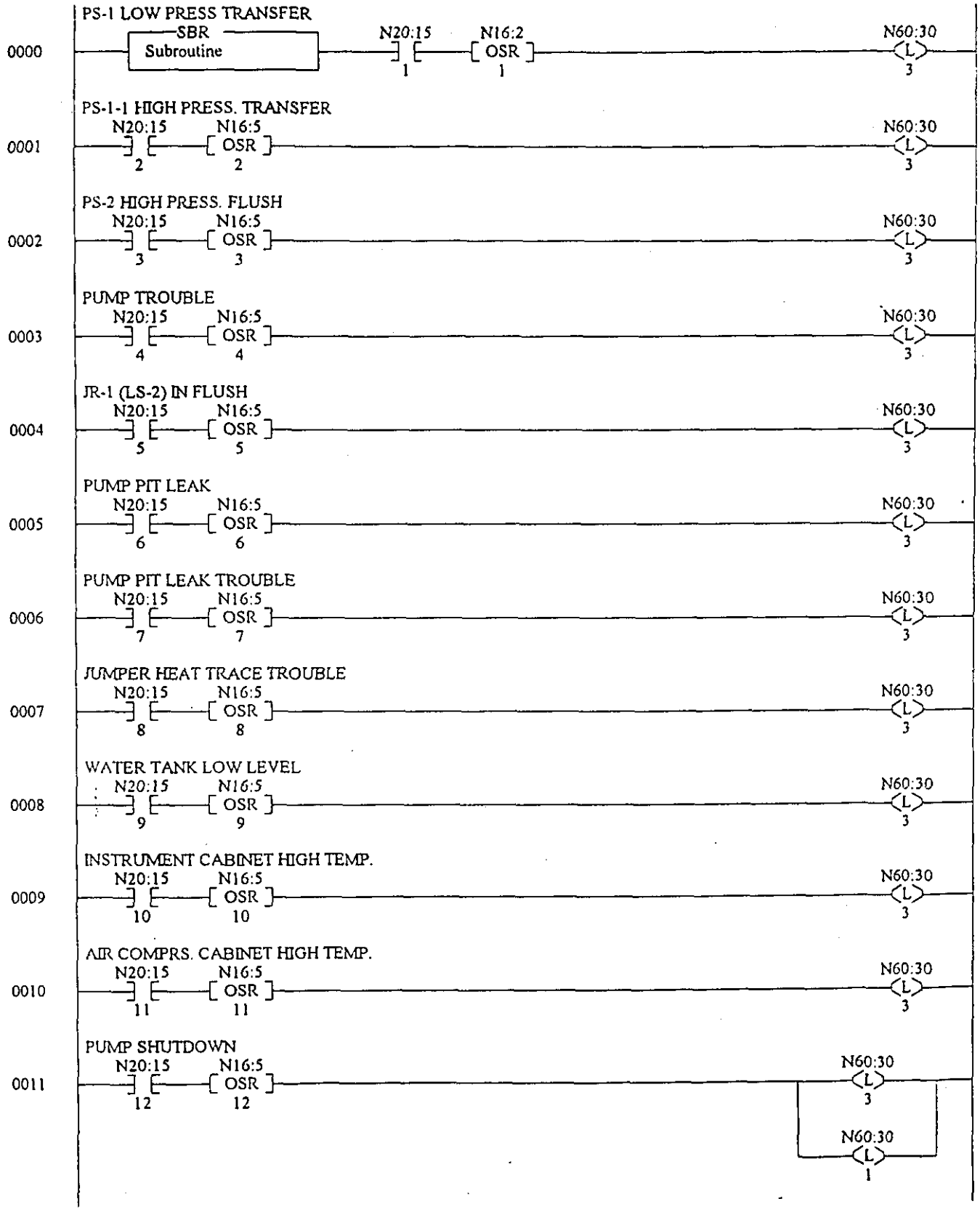

0012 SALTWELL LOW LEVEL
N20:15/13 — N16:5 OSR 13 — N60:30 (L) 3

0013 RECIRC FLUSH PRESS. SIGNAL LOSS
N20:15/14 — N16:5 OSR 14 — N60:30 (L) 3

0014 DATA COMM. FAILURE
N20:15/15 — N16:5 OSR 15 — N60:30 (L) 3

0015 JUMPER FLUSH PRESS. SIGNAL LOSS
N20:16/0 — N16:6 OSR 0 — N60:30 (L) 3

0016 U-FARM LEAK DET. ALARMS
N20:16/1 — N16:9 OSR 10 — N60:30 (L) 3

0017 LEAK DET. 1 LEAK
N20:16/2 — N16:6 OSR 2 — N60:30 (L) 3

0018 LEAK DET. 1 TROUBLE
N20:16/3 — N16:6 OSR 3 — N60:30 (L) 3

0019 OTHER U-FARM SKID(S) IN FLUSH POSITION
N20:16/4 — N16:6 OSR 4 — N60:30 (L) 3

0020 RECIRC. FAILURE (LOW FLOW)
N20:16/5 — N16:6 OSR 5 — N60:30 (L) 3

0021 FGM (GREATER THAN 25% LFL)
N20:16/6 — N16:2 OSR 6 — N60:30 (L) 3

0022 LEAK DET STATION 4 TROUBLE
N20:16/7 — N16:6 OSR 7 — N60:30 (L) 3

0023 OTHER U-FARM SKID(S) SHUTDOWN
N20:16/8 — N16:9 OSR 11 — N60:30 (L) 3

0024 N20:16/9 — N16:9 OSR 12 — N60:30 (L) 3

0025 VALVE PIT U-C LEAK
N20:16/10 — N16:6 [OSR 10] — N60:30 (L) 3

0026 VALVE PIT U-C TROUBLE
N20:16/11 — N16:6 [OSR 12] — N60:30 (L) 3

0027 VALVE PIT U-D LEAK
N20:16/12 — N16:6 [OSR 14] — N60:30 (L) 3

0028 VALVE PIT U-D TROUBLE
N20:16/13 — N16:7 [OSR 0] — N60:30 (L) 3

0029 N20:16/14 — N16:9 [OSR 13] — N60:30 (L) 3

0030 LEAK DET. STATION 5 TROUBLE
N20:16/15 — N16:9 [OSR 14] — N60:30 (L) 3

0031 N20:15/0 — N16:7 [OSR 7] — N60:30 (L) 3

0032 COB U-33 LEAK
N20:55/0 — N16:7 [OSR 10] — N60:30 (L) 3

0033 N20:55/1 — N16:7 [OSR 11] — N60:30 (L) 3

0034 DILUTION LOW LEVEL
N20:55/2 — N16:7 [OSR 12] — N60:30 (L) 3

0035 COB U-33 TROUBLE
N20:55/3 — N16:7 [OSR 13] — N60:30 (L) 3

0036 OTHER U-FARM SKID(S) HIGH FLUSH PRESS.
N20:55/4 — N16:7 [OSR 14] — N60:30 (L) 3

0037 OTHER U-FARM SKID(S) HIGH RECIRC PRESS.
N20:55/5 — N16:7 [OSR 15] — N60:30 (L) 3

RECIRC. HIGH PRESSURE
0038 N20:55/6 N16:8 OSR 0 — N60:30 (L) 3

VALVE PIT U-A LEAK
0039 N20:55/7 N16:8 OSR 1 — N60:30 (L) 3

VALVE PIT U-A TROUBLE
0040 N20:55/8 N16:8 OSR 2 — N60:30 (L) 3

VALVE PIT U-B LEAK
0041 N20:55/9 N16:8 OSR 3 — N60:30 (L) 3

VALVE PIT U-B TROUBLE
0042 N20:55/10 N16:8 OSR 4 — N60:30 (L) 3

COB U-30 LEAK
0043 N20:55/11 N16:8 OSR 5 — N60:30 (L) 3

COB U-30 TROUBLE
0044 N20:55/12 N16:8 OSR 6 — N60:30 (L) 3

OTHER SKID RECIRC FLUSH SIGNAL LOST
0045 N20:55/13 N16:8 OSR 7 — N60:30 (L) 3

OTHER SKID JUMPER FLUSH SIGNAL LOST
0046 N20:55/14 N16:8 OSR 8 — N60:30 (L) 3

VALVE PIT SY-B LEAK ALARM
0047 N20:55/15 N16:9 OSR 15 — N60:30 (L) 3

0048 N20:56/0 N16:10 OSR 0 — N60:30 (L) 3

0049 N20:56/1 N16:10 OSR 1 — N60:30 (L) 3

0050 N20:56/2 N16:10 OSR 2 — N60:30 (L) 3

0051 N20:56/3 N16:8 OSR 9 — N60:30 (L) 3

EXHAUSTER ON LINE

0052 N20:56/4 N16:8 OSR 10 — N60:30 (L) 3

0053 N20:56/5 N16:10 OSR 3 — N60:30 (L) 3

0054 N20:56/6 N16:8 OSR 11 — N60:30 (L) 3

0055 N20:56/7 N16:8 OSR 12 — N60:30 (L) 3

0056 N20:56/8 N16:8 OSR 13 — N60:30 (L) 3

0057 N20:56/9 N16:8 OSR 14 — N60:30 (L) 3

0058 N20:56/10 N16:10 OSR 4 — N60:30 (L) 3

0059 N20:56/11 N16:10 OSR 5 — N60:30 (L) 3

0060 N20:56/12 N16:10 OSR 6 — N60:30 (L) 3

0061 N20:56/13 N16:10 OSR 7 — N60:30 (L) 3

0062 N20:56/14 N16:10 OSR 8 — N60:30 (L) 3

0063 N20:56/15 N16:10 OSR 9 — N60:30 (L) 3

AMBER LIGHT CONTROL, LOW PRESS. TRANSFER SHUTDOWN

0064 N60:30/7 — N60:31 ( ) 1

RED LIGHT CONTROL, MR-1 POWER ON

0065 N60:31/6 — N60:31 ( ) 0

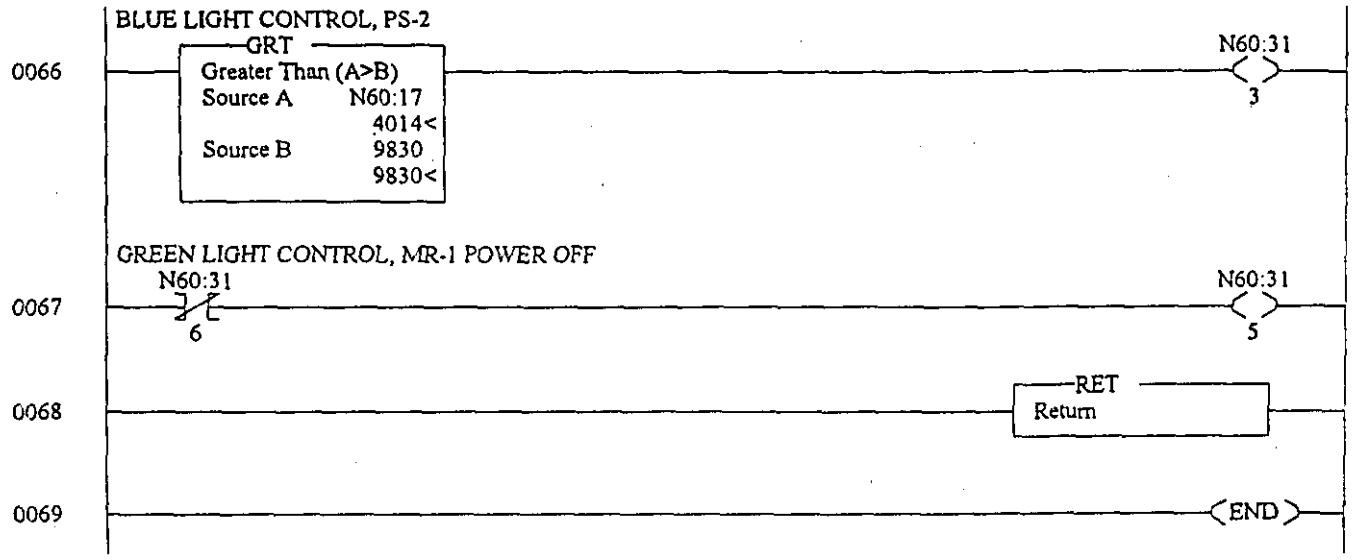
BLUE LIGHT CONTROL, PS-2
0066
GRT
Greater Than (A>B)
Source A N60:17
4014<
Source B 9830
9830<
N60:31
3
GREEN LIGHT CONTROL, MR-1 POWER OFF
0067
N60:31
6
N60:31
5
0068
RET
Return
0069
END

LAD 19 - — Total Rungs in File = 9

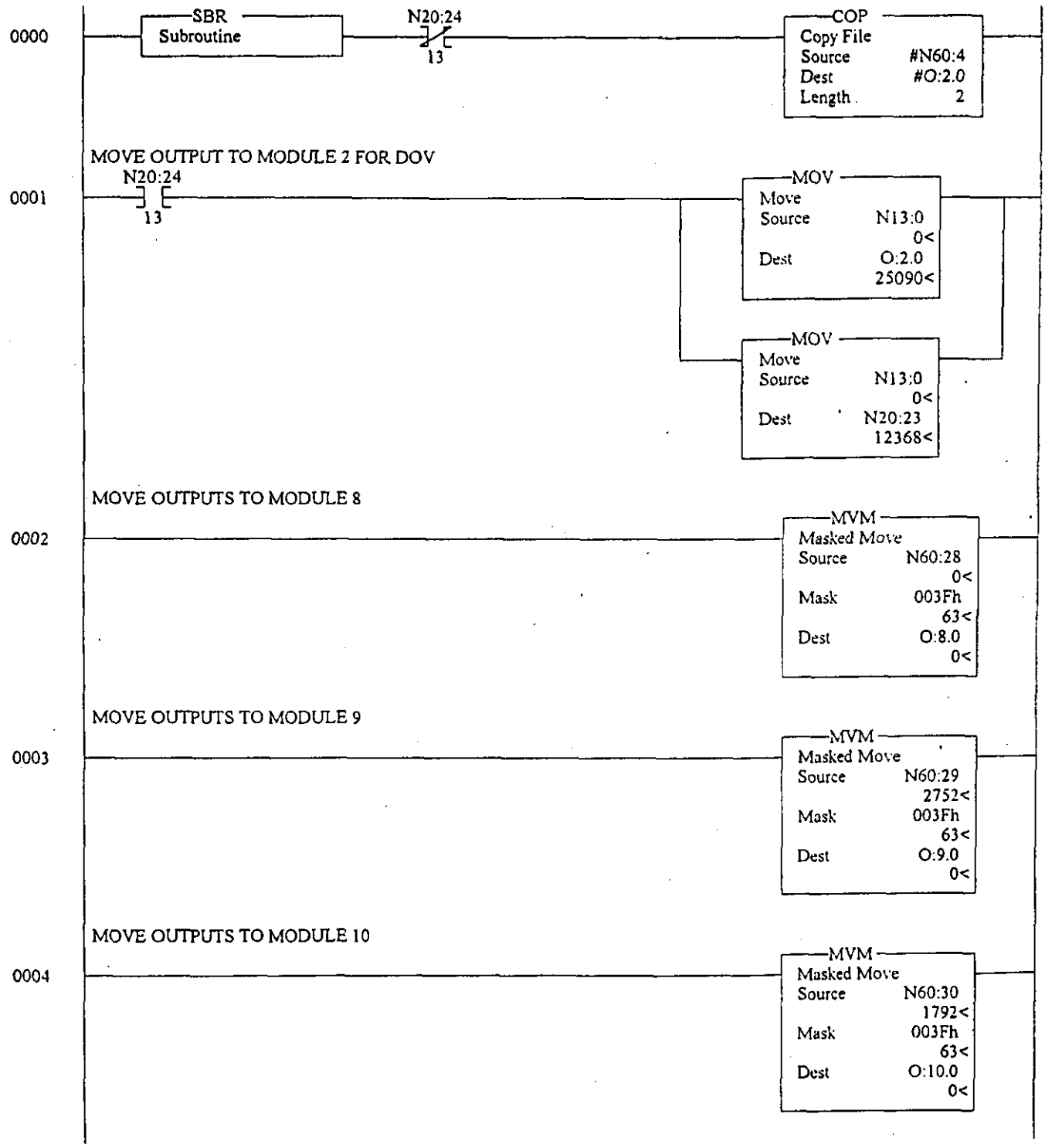

LAD 19 - --- Total Rungs in File = 9

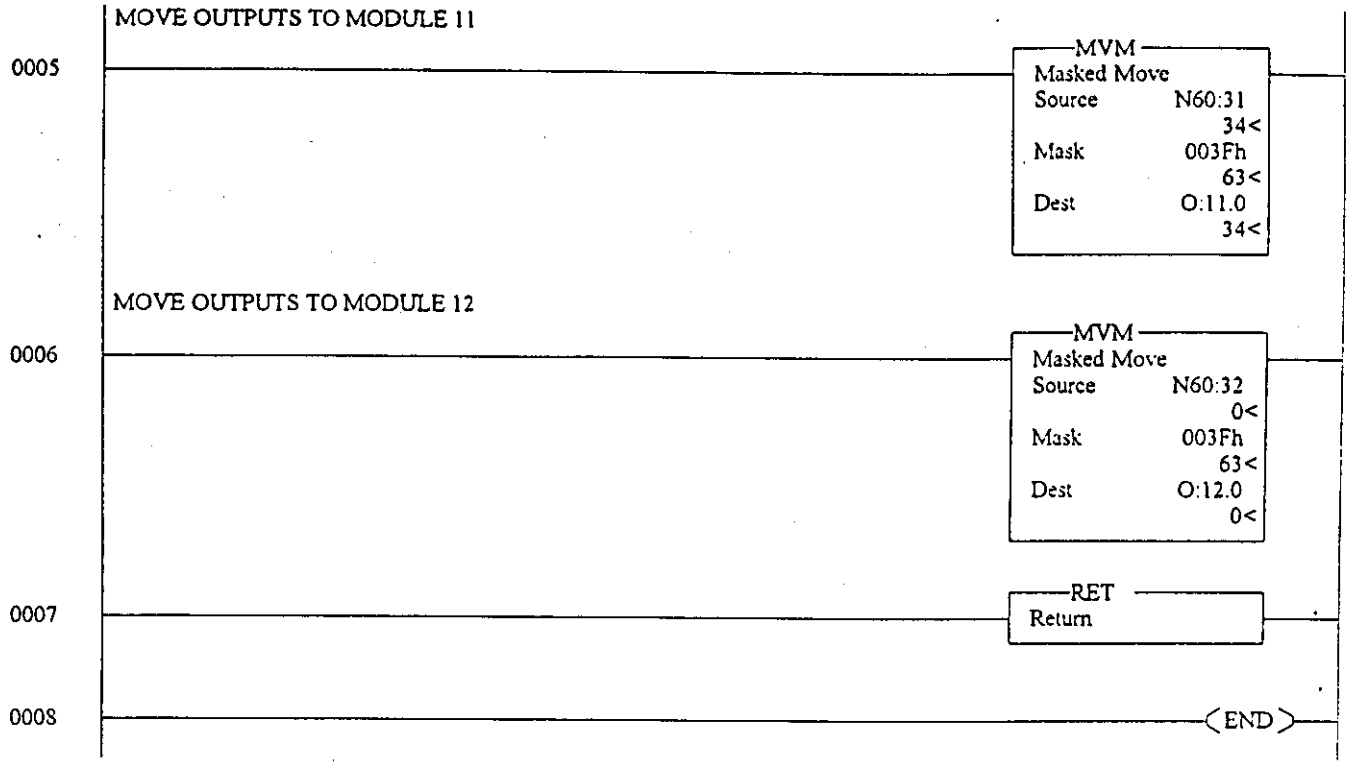

Get flow input

0000

MOV
Move
Source N60:15
-1<
Dest N30:0
-1<

Calc offset

0001

SUB
Subtract
Source A N30:0
-1<
Source B 3277
3277<
Dest N30:1
0<

0002

LES
Less Than (A<B)
Source A N30:1
0<
Source B 0
0<

CLR
Clear
Dest N30:1
0<

0003

GRT
Greater Than (A>B)
Source A N30:1
0<
Source B 13107
13107<

MOV
Move
Source 13107
13107<
Dest N30:1
0<

Prepare dilution input ratio

0004

MUL
Multiply
Source A N30:3
50<
Source B 100
100<
Dest N30:4
5000<

Calc dilution base on input ratio

0005

SCL
Scale
Source N30:1
0<
Rate [/10000] N30:4
5000<
Offset 0
0<
Dest N30:5
0<

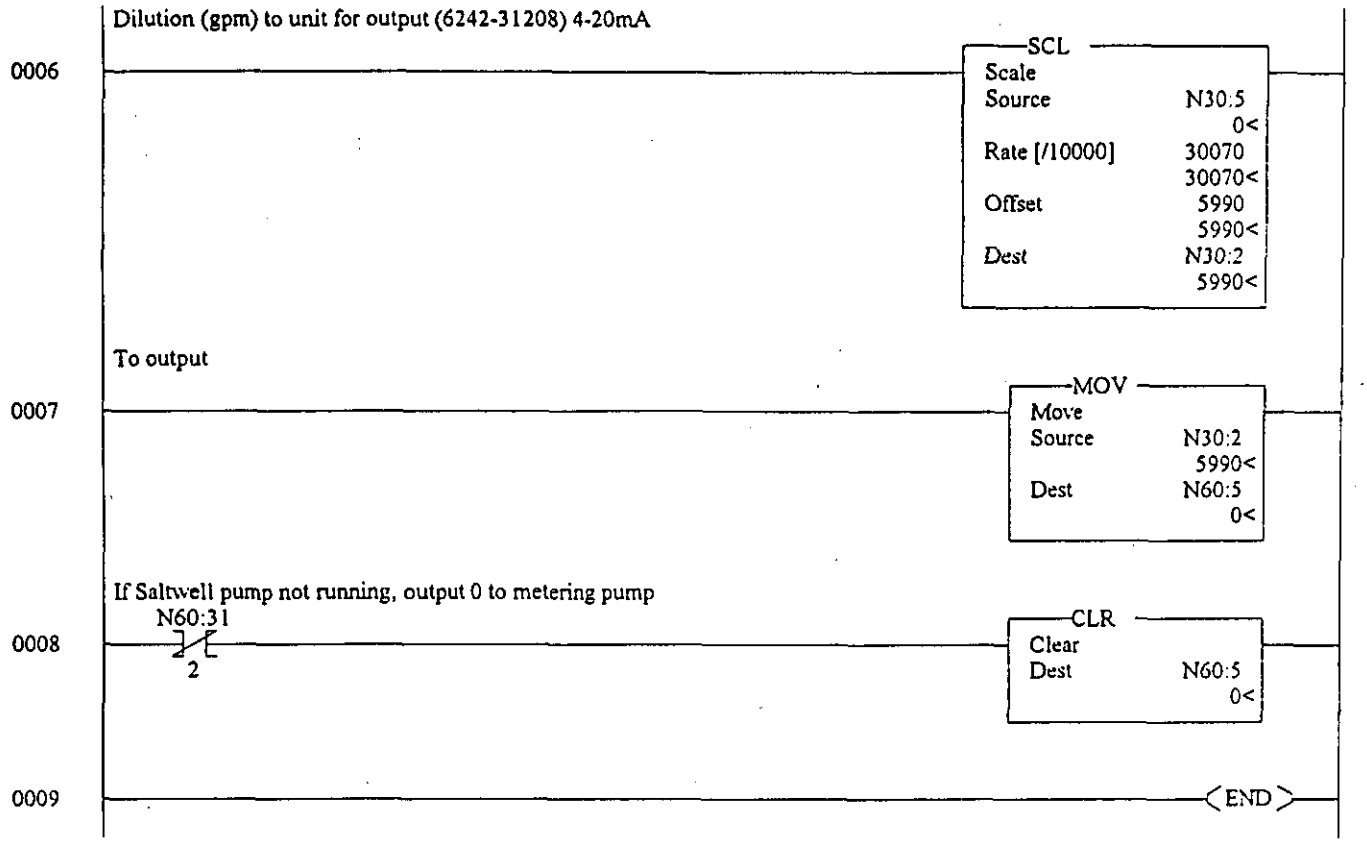
Dilution (gpm) to unit for output (6242-31208) 4-20mA
0006
SCL
Scale
Source N30:5
0<
Rate [/10000] 30070
30070<
Offset 5990
5990<
Dest N30:2
5990<
To output
0007
MOV
Move
Source N30:2
5990<
Dest N60:5
0<
If Saltwell pump not running, output 0 to metering pump
N60:31
0008
2
CLR
Clear
Dest N60:5
0<
0009
END