S

ENGINEERING CHANGE NOTICE

1. ECN 644523

Proj. ECN

2. ECN Category (mark one)	3. Originator's Name, Organization, MSIN, and Telephone No.	4. USQ Required?	5. Date
Supplemental [] Direct Revision [X] Change ECN [] Temporary [] Standby [] Supersedure [] Cancel/Void []	CE Graves, Plant Support Engrg, R3-73, 376-5545	[] Yes [X] No	December 15, 2000
	6. Project Title/No./Work Order No. RPP/WFD	7. Bldg./Sys./Fac. No. Tank Farms	8. Approval Designator ESQ
	9. Document Numbers Changed by this ECN (includes sheet no. and rev.) HNF-4163, Rev. 0	10. Related ECN No(s). NA	11. Related PO No. NA

12a. Modification Work	12b. Work Package No.	12c. Modification Work Complete	12d. Restored to Original Condition (Temp. or Standby ECN only)
[] Yes (fill out Blk. 12b) [X] No (NA Blks. 12b, 12c, 12d)	NA	NA Design Authority/Cog. Engineer Signature & Date	NA Design Authority/Cog. Engineer Signature & Date

13a. Description of Change

13b. Design Baseline Document? [X] Yes [] No

Changes to HNF-4163, *DST Diluent and Flush Subsystem Specification*

Revise these Sections per Appendix L in RPP-7011:

3.1.2.1.2.a*	3.2.1.1.d	3.2.5.2.1.b	3.3.1.r*	3.5.1.b
3.2.1.1.b*	3.2.1.2.d*	3.3.1.i	3.4.a	3.5.2.a
3.2.1.1.c	3.2.3.c	3.3.1.j	3.5.1.a	

Delete this Section per Appendix L in RPP-7011:
3.2.2.a

Update procedure references in Sections 3.3.6.1.b, 3.3.6.3.a, and 3.4.b.

Update boilerplate text (for consistency amongst Subsystem specifications).

Delete text in Section 3.2.7 and replace with "Not applicable."

Update Table 2-1, Table 2-2, and Appendix A to reflect the above changes/deletions.

* Update to use new pressure and/or flow rate value(s) in Rev. 1 of RPP-5346.

14a. Justification (mark one)

Criteria Change [X]
Design Improvement []
Environmental []
Facility Deactivation []
As-Found []
Facilitate Const. []
Const. Error/Omission []
Design Error/Omission []

14b. Justification Details

This ECN incorporates DST Diluent and Flush Subsystem specification changes detailed in RPP-7011, *DST Subsystem Specification/Project Media Baseline Comparison Summary Report*, as agreed to by the Baseline Comparison team. Pressure and flow rate values have been updated to the revised values in Rev. 1 of RPP-5346, *Waste Feed Delivery Transfer System Analysis*. Procedure references and boilerplate text are also updated.

15. Distribution (include name, MSIN, and no. of copies)

See Distribution List

RELEASE STAMP

JAN 18 2001
DATE:
STA: 4
HANFORD RELEASE
ID:

A-7900-013-2 (10/97)

ENGINEERING CHANGE NOTICE	Page 2 of 2	1. ECN 644523

16. Design Verification Required	17. Cost Impact				18. Schedule Impact (days)	
	ENGINEERING		CONSTRUCTION			
[] Yes	Additional	[] $ NA	Additional	[] $ NA	Improvement	[] NA
[X] No	Savings	[] $	Savings	[] $	Delay	[] _____

19. Change Impact Review: Indicate the related documents (other than the engineering documents identified on Side 1) that will be affected by the change described in Block 13. Enter the affected document number in Block 20.

SDD/DD	[]	Seismic/Stress Analysis	[]	Tank Calibration Manual	[]
Functional Design Criteria	[]	Stress/Design Report	[]	Health Physics Procedure	[]
Operating Specification	[]	Interface Control Drawing	[]	Spares Multiple Unit Listing	[]
Criticality Specification	[]	Calibration Procedure	[]	Test Procedures/Specification	[]
Conceptual Design Report	[]	Installation Procedure	[]	Component Index	[]
Equipment Spec.	[]	Maintenance Procedure	[]	ASME Coded Item	[]
Const. Spec.	[]	Engineering Procedure	[]	Human Factor Consideration	[]
Procurement Spec.	[]	Operating Instruction	[]	Computer Software	[]
Vendor Information	[]	Operating Procedure	[]	Electric Circuit Schedule	[]
OM Manual	[]	Operational Safety Requirement	[]	ICRS Procedure	[]
FSAR/SAR	[]	IEFD Drawing	[]	Process Control Manual/Plan	[]
Safety Equipment List	[]	Cell Arrangement Drawing	[]	Process Flow Chart	[]
Radiation Work Permit	[]	Essential Material Specification	[]	Purchase Requisition	[]
Environmental Impact Statement	[]	Fac. Proc. Samp. Schedule	[]	Tickler File	[]
Environmental Report	[]	Inspection Plan	[]	None	[X]
Environmental Permit	[]	Inventory Adjustment Request	[]	_____	[]

20. Other Affected Documents: (NOTE: Documents listed below will not be revised by this ECN.) Signatures below indicate that the signing organization has been notified of other affected documents listed below.

Document Number/Revision	Document Number/Revision	Document Number Revision
NA		

21. Approvals

	Signature		Date		Signature	Date
Design Authority RW Reed	RW Reed	R3-83	16 Jan 2001	Design Agent		
Cog. Eng. CE Graves	CE Graves	R3-73	01/15/01	PE		
Cog. Mgr. TJ Conrads	TJ Conrads	R3-73	1/16/01	QA		
QA WL Adams	WL Adams	S5-11	1-17-01	Safety		
Safety/Licensing JP Harris	JP Harris	R1-49	1-17-01	Design		
Environ. KS Tollefson	KS Tollefson	R1-51	1-17-01	Environ.		
Other				Other		
CE Grenard	Charles E Grenard	R3-73	1/15/01			

DEPARTMENT OF ENERGY

Signature or a Control Number that tracks the Approval Signature

ADDITIONAL

A-7900-013-3 (10/97)

DISTRIBUTION SHEET

To:	From:	Page 1 of 1
Distribution	Plant Support Engineering	Date January 15, 2001
Project Title/Work Order:		EDT No. ---
HNF-4163, Rev. 1, *Double-Shell Tank Diluent and Flush Subsystem Specification*		ECN No. 644523

Name	MSIN	Text With All Attach.	Text Only	Attach./ Appendix Only	EDT/ECN Only
D. D. Acree	R2-36	X			
W. L. Adams	S5-11	X			
J. P. Bailey	R3-25	X			
P. J. Certa	R3-73	X			
A. F. Choho	R2-50	X			
T. J. Conrads	R3-73	X			
D. P. Fassett	R3-73	X			
A. H. Friberg	R1-56	X			
C. E. Graves	R3-73	X			
C. E. Grenard	R3-73	X			
J. P. Harris	R1-49	X			
E. W. Martinen	R3-47	X			
G. W. McLellan	R3-47	X			
R. W. Reed	R3-83	X			
C. A. Rieck	R3-47	X			
R. W. Root	S6-17	X			
K. S. Tollefson	R1-51	X			
R. P. Tucker	S5-07	X			
K. A. White	R3-47	X			

Double-Shell Tank Diluent and Flush Subsystem Specification

C. E. Graves
Fluor Federal Services
Richland, WA 99352
U.S. Department of Energy Contract DE-AC06-99RL-14047

EDT/ECN: 644523 UC: 721
Org Code: 7N700 Charge Code: 110302
B&R Code: Total Pages: 68

Key Words: privatization, double-shell tank, waste feed delivery, subsystem, specification, level 2, ventilation

Abstract:

This specification establishes the performance requirements and provides references to the requisite codes and standards to be applied to the Double-Shell Tank (DST) Diluent and Flush Subsystem which supports the first phase of Waste Feed Delivery.

TRADEMARK DISCLAIMER. Reference herein to any specific commercial product, process, or service by trade name, trademark, manufacturer, or otherwise, does not necessarily constitute or imply its endorsement, recommendation, or favoring by the United States Government or any agency thereof or its contractors or subcontractors.

Printed in the United States of America. To obtain copies of this document, contact: Document Control Services, P.O. Box 950, Mailstop H6-08, Richland WA 99352, Phone (509) 372-2420; Fax (509) 376-4989.

1/18/01

Release Approval Date

JAN 18 2001
DATE:
STA: 4
HANFORD RELEASE
ID:
Release Stamp

APPROVED FOR PUBLIC RELEASE

RECORD OF REVISION

(1) Document Number: HNF-4163

Page 1

(2) Title: Double-Shell Tank Diluent and Flush Subsystem Specification

Change Control Record

(3) Revision	(4) Description of Change - Replace, Add, and Delete Pages	Authorized for Release		
		(5) Cog. Engr.	(6) Cog. Mgr.	Date
0	(7) Initial Release by EDT #628410.	DP Fassett	TJ Conrads	
1 RS	Complete Revision incorporating ECNS #644464 and #644523.	CE Graves CE Graves	TJ Conrads TJ Conrads	11/2/01

A-7320-005 (10/97)

HNF-4163
Revision 1

Double-Shell Tank Diluent and Flush Subsystem Specification

Prepared for the U.S. Department of Energy
Assistant Secretary for Environmental Management

CH2MHILL
Hanford Group, Inc.
Richland, Washington
Contractor for the U.S. Department of Energy
Office of River Protection under Contract DE-AC06-99RL14047

Approved for Public Release; Further Dissemination Unlimited

LEGAL DISCLAIMER

This report was prepared as an account of work sponsored by an agency of the United States Government. Neither the United States Government nor any agency thereof, nor any of their employees, nor any of their contractors, subcontractors or their employees, makes any warranty, express or implied, or assumes any legal liability or responsibility for the accuracy, completeness, or any third party's use or the results of such use of any information, apparatus, product, or process disclosed, or represents that its use would not infringe privately owned rights. Reference herein to any specific commercial product, process, or service by trade name, trademark, manufacturer, or otherwise, does not necessarily constitute or imply its endorsement, recommendation, or favoring by the United States Government or any agency thereof or its contractors or subcontractors. The views and opinions of authors expressed herein do not necessarily state or reflect those of the United States Government or any agency thereof.

This report has been reproduced from the best available copy. Available in paper copy and microfiche.

Available electronically at http://www.doe.gov/bridge. Available for a processing fee to the U.S. Department of Energy and its contractors, in paper, from:
U.S. Department of Energy
Office of Scientific and Technical Information
P.O. Box 62
Oak Ridge, TN 37831-0062
phone: 865-576-8401
fax: 865-576-5728
email: reports@adonis.osti.gov(423) 576-8401

Available for sale to the public, in paper, from:
U.S. Department of Commerce
National Technical Information Service
5285 Port Royal Road
Springfield, VA 22161
Phone: 800-553-6847
fax: 703-605-6900
email: orders@ ntis.fedworld.gov
online ordering:
http://www.ntis.gov/ordering.htm

Printed in the United States of America

HNF-4163
Revision 1

Double-Shell Tank Diluent and Flush Subsystem Specification

Prepared by:
C. E. Graves
D. P. Fassett

Date Published
January 2001

Prepared for the U.S. Department of Energy
Assistant Secretary for Environmental Management

CH2MHILL
Hanford Group, Inc.
P. O. Box 1500
Richland, Washington

Contractor for the U.S. Department of Energy
Office of River Protection under Contract DE-AC06-99RL14047

Approved for Public Release; Further Dissemination Unlimited

This page intentionally left blank.

CONTENTS

1.0 SCOPE 1-1
1.1 DESCRIPTION 1-1
1.2 CLASSIFICATION 1-1

2.0 APPLICABLE DOCUMENTS 2-1
2.1 GOVERNMENT DOCUMENTS 2-1
2.2 NON-GOVERNMENT DOCUMENTS 2-1

3.0 REQUIREMENTS 3-1
3.1 SUBSYSTEM/COMPONENT DEFINITION 3-1
3.1.1 Subsystem/Component Diagrams 3-6
3.1.2 Interface Definition 3-7
3.1.2.1 Functional Interfaces 3-8
3.1.2.2 Physical Interfaces 3-9
3.1.3 Major Component List 3-10
3.1.4 Government-Furnished Property List 3-10
3.1.5 Government-Loaned Property Lists 3-10
3.2 CHARACTERISTICS 3-10
3.2.1 Performance Characteristics 3-10
3.2.1.1 Deliver Caustic or Diluent to Transfer-Associated Structures 3-10
3.2.1.2 Deliver Flush Water to Transfer-Associated Structures 3-11
3.2.1.3 Monitor and Control the Double-Shell Tank Diluent and Flush Subsystem 3-12
3.2.2 Physical Characteristics 3-12
3.2.3 Reliability 3-12
3.2.4 Maintainability 3-13
3.2.5 Environmental Conditions 3-13
3.2.5.1 Natural Environments 3-13
3.2.5.2 Induced Environments 3-13
3.2.6 Transportability 3-14
3.2.7 Flexibility and Expansion 3-14
3.3 DESIGN AND CONSTRUCTION 3-14
3.3.1 Materials, Processes, and Parts 3-14
3.3.2 Electromagnetic Radiation 3-15
3.3.3 Nameplates and Product Marking 3-16
3.3.4 Workmanship 3-16
3.3.5 Interchangeability 3-16
3.3.6 Safety 3-16
3.3.6.1 Personnel Safety 3-16
3.3.6.2 Equipment Protection 3-17
3.3.6.3 Environmental Safety 3-17
3.3.7 Human Performance/Human Engineering 3-17
3.3.8 Decontamination and Decommissioning 3-17

3.4 DOCUMENTATION 3-17
3.5 LOGISTICS 3-18
3.5.1 Maintenance 3-18
3.5.2 Supply 3-18
3.5.3 Facility and Facility Equipment 3-18
3.6 PERSONNEL AND TRAINING 3-18
3.7 CHARACTERISTICS OF SUBELEMENTS 3-19
3.7.1 Diluent and Flush Structures 3-19
3.7.2 Heating Equipment 3-19
3.7.3 Chemical Unloading Equipment 3-19
3.7.4 Diluent and Flush Solution Transfer Equipment 3-19
3.7.5 Diluent and Flush Instrumentation and Controls 3-20
3.8 PRECEDENCE 3-20
3.9 SECURITY 3-20
3.10 COMPUTER RESOURCE RESERVE CAPACITY 3-20

4.0 QUALITY ASSURANCE PROVISIONS 4-1
4.1 GENERAL 4-1
4.1.1 Responsibility 4-1
4.1.2 Special Tests 4-1
4.2 DESIGN VERIFICATION 4-2

5.0 PREPARATION FOR DELIVERY 5-1

6.0 NOTES 6-1
6.1 DEFINITIONS 6-1
6.2 LIST OF TERMS 6-1

7.0 REFERENCES 7-1

APPENDIX

A SOURCE DOCUMENTS AND TEST METHODS ..... A-i

FIGURES

Figure 3-1. Double-Shell Tank Ventilation Subsystem Functions for Waste Storage.....3-2

Figure 3-2. Double-Shell Tank Diluent and Flush Subsystem Functional Hierarchy for Waste Transfer.....3-3

Figure 3-3. Double-Shell Tank System Architecture Tree. 3-4

Figure 3-4. Subsystem for Double-Shell Tank Mechanical System Interfaces. 3-5

Figure 3-5. Interfaces for Double-Shell Tank Monitor and Control Subsystem.....3-5

Figure 3-6. Architectural Decomposition of the Double-Shell Tank Diluent and Flush Subsystem. 3-7

Figure 3-7. General Layout of the Double-Shell Tank Diluent and Flush Subsystem. 3-7

Figure 3-8. Major Interfaces of the Double-Shell Tank Diluent and Flush Subsystem.....3-8

This page intentionally left blank.....3-21

TABLES

Table 2-1. Government Documents 2-1

Table 2-2. Non-Government Documents.....2-2

This page intentionally left blank.

1.0 SCOPE

1.1 DESCRIPTION

The Double-Shell Tank (DST) Diluent and Flush Subsystem is intended to support Waste Feed Delivery. The DST Diluent and Flush Subsystem specification describes the relationship of this system with the DST System, describes the functions that must be performed by the system, and establishes the performance requirements to be applied to the design of the system. It also provides references for the requisite codes and standards.

The DST Diluent and Flush Subsystem will treat the waste for a more favorable waste transfer. This will be accomplished by diluting the waste, dissolving the soluble portion of the waste, and flushing waste residuals from the transfer line.

The Diluent and Flush Subsystem will consist of the following:

- The Diluent and Flush Station(s) where chemicals will be off-loaded, temporarily stored, mixed as necessary, heated, and metered to the delivery system
- A piping delivery system to deliver the chemicals to the appropriate valve or pump pit
- Associated support structures.

This specification is intended to be the basis for new projects/installations. This specification is not intended to retroactively affect previously established project design criteria without specific direction by the program.

1.2 CLASSIFICATION

Not applicable.

This page intentionally left blank.

2.0 APPLICABLE DOCUMENTS

Design requirements applicable to the Double-Shell Tank (DST) Diluent and Flush Subsystem come from government and non-government source documents and various codes and standards. Each document (of the exact revision identified) in this section is invoked by one or more requirements of this specification and represents a part of this specification to the extent specified.

2.1 GOVERNMENT DOCUMENTS

U.S. Department of Energy (DOE) orders and regulatory documents, including those promulgated by the Federal Government and Washington State, constitute a part of this specification to the extent specified herein. The regulatory documents that form a part of this specification are listed in Table 2-1.

Table 2-1. Government Documents.

Document Number	Title
10 CFR 835, 2000	"Occupational Radiation Protection," *Code of Federal Regulations*, as amended.
29 CFR 1910, 1999	"Occupational Safety and Health Standards," *Code of Federal Regulations*, as amended.
49 CFR 177.834, parts (I)(2)-(5), 1999	"Carriage By Public Highway," "General," *Code of Federal Regulations*, as amended.
DOE Order 6430.1A, 1989	*General Design Criteria*, U.S. Department of Energy, Washington, D.C.

2.2 NON-GOVERNMENT DOCUMENTS

National codes, standards, and the Hanford Site documents listed in Table 2-2 constitute a part of this specification to the extent specified herein. The RPP-PRO procedures implement Federal and state regulations and DOE orders. In addition, it should be noted that some requirements are based on the existing authorization basis documents (e.g., HNF-SD-WM-SAR-067, and *Tank Waste Remediation System Technical Safety Requirements*, HNF-SD-WM-TSR-006). The authorization basis requirements may be changed, if necessary, after the analysis and justification of the resulting risk have been outlined in a final safety analysis report amendment and approval is obtained from the DOE Office of River Protection.

Table 2-2. Non-Government Documents. (2 Sheets)

Document Number	Title
ACI 318, 1995	*Building Code Requirements for Reinforced Concrete*, American Concrete Institute, Farmington Hills, Michigan.
ANSI Z358.1	*Emergency Eyewash and Shower Equipment*, American National Standards Institute, New York, New York.
ASME B16.34, 1998	*Valves-Flanged, Threaded, and Welding End*, American Society of Mechanical Engineers, New York, New York.
ASME B31.3, 1999	*Process Piping*, American Society of Mechanical Engineers, New York, New York.
ASME NQA-1, 1994	*Quality Assurance Program Requirements for Nuclear Facilities*, American Society of Mechanical Engineers, New York, New York.
HNF-2962, Rev. 0, 1998	*A List of EMI/EMC Requirements*, Numatec Hanford Corporation for Fluor Daniel Hanford, Inc., Richland, Washington.
HNF-5183, Rev. 0, 2000	*Tank Farms Radiological Control Manual (TFRCM)*, CH2M HILL Hanford Group, Inc., Richland, Washington.
HNF-IP-0842, Vol. II, Section 6.1, Rev. 0a, 1999	*RPP Administration*, "Tank Farm Operations Equipment Labeling," Lockheed Martin Hanford Corporation, Richland, Washington.
HNF-IP-0842, Vol. IV, Section 5.4, Rev. 12, 1999	*RPP Administration*, "Unreviewed Safety Questions," Lockheed Martin Hanford Corporation, Richland, Washington.
HNF-IP-0842, Vol. IV, Section 6.9, Rev. 0, 2000	*RPP Administration*, "Hazard and Accident Analysis Process," CH2M HILL Hanford Group, Inc., Richland, Washington.
HNF-IP-0842, Vol. IV, Section 6.10, Rev. 0, 2000	*RPP Administration*, "Safety Analysis Process – New Project," CH2M HILL Hanford Group, Inc., Richland, Washington.
HNF-IP-0842, Vol. IV, Section 6.11, Rev. 0, 2000	*RPP Administration*, "Safety Analysis Process – Facility Change or Modification," CH2M HILL Hanford Group, Inc., Richland, Washington.
HNF-IP-0842, Vol. IV, Section 6.12, Rev. 0, 2000	*RPP Administration*, "Safety Analysis and Technical Safety Requirements," CH2M HILL Hanford Group, Inc., Richland, Washington.
HNF-IP-0842, Vol. V, Section 7.3, Rev. 4d, 2000	*RPP Administration*, "Preventive Maintenance Program," CH2M HILL Hanford Group, Inc., Richland, Washington.
HNF-IP-0842, Vol. VII, Section 12.4, Rev. 0, 2000	*RPP Administration*, "Radiological Design Review Process," CH2M HILL Hanford Group, Inc., Richland, Washington.
HNF-IP-0842, Vol. XI, Section 1.0, Rev. 2a, 1999	*RPP Administration*, "Quality Assurance Program," Lockheed Martin Hanford Corporation, Richland, Washington.

Table 2-2. Non-Government Documents. (2 Sheets)

Document Number	Title
HNF-PRO-224, Rev. 3, 2000	*Document Control Program Standards*, Fluor Hanford, Inc., Richland, Washington.
HNF-SD-GN-ER-501, Rev. 1, 1998	*Natural Phenomena Hazards, Hanford Site, Washington,* Numatec Hanford Corporation for Fluor Daniel Hanford, Inc., Richland, Washington.
HNF-SD-W211-PSAD-001, Rev. 0, 1998	*Safety Assessment for Initial Tank Retrieval Systems, Project W-211*, Numatec Hanford Corporation for Fluor Daniel Hanford, Inc., Richland, Washington.
HNF-SD-WM-SAR-067, Rev. 1, 1999	*Tank Waste Remediation System Final Safety Analysis Report,* Lockheed Martin Hanford Corporation for Fluor Daniel Hanford, Inc., Richland, Washington.
HNF-SD-WM-TSR-006, Rev. 1, 1999	*Tank Waste Remediation System Technical Safety Requirements,* Fluor Daniel Hanford Inc., Richland, Washington.
MSS-SP-61, 1992	*Pressure Testing of Steel Valves*, Manufacturers Standardization Society, Englewood, Colorado.
NEMA ICS 6, 1993	*Industrial Controls and Systems*, National Electrical Manufacturers Association, Arlington, Virginia.
RPP-PRO-097, Rev. 0, 1999	*Engineering Design and Evaluation*, CH2M HILL Hanford Group, Inc., Richland, Washington.
RPP-PRO-222, Rev. 0, 1999	*Quality Assurance Records Standards*, CH2M HILL Hanford Group, Inc., Richland, Washington.
RPP-PRO-709, Rev. 0, 1999	*Preparation and Control Standards for Engineering Drawings*, CH2M HILL Hanford Group, Inc., Richland, Washington.
RPP-PRO-1819, Rev. 0, 1999	*Engineering Requirements*, CH2M HILL Hanford Group, Inc., Richland, Washington.

This page intentionally left blank.

3.0 REQUIREMENTS

3.1 SUBSYSTEM/COMPONENT DEFINITION

The DST System provides safe storage of waste products, serves as a waste processing system for waste pretreatment, and provides a staging system for delivery of waste feed to the River Protection Project (RPP) Waste Treatment Plant for waste treatment/immobilization.

The DST System includes six tank farms containing a total of 28 DSTs. Five of the DST farms are located in the 200 East Area (241-AN, 241-AP, 241-AW, 241-AY, and 241-AZ), and one is located in the 200 West Area (241-SY). The four tanks in the 241-AY and 241-AZ tank farms are designed to store high heat or "aging" waste and have a design storage capacity of 3,800 m^3 (1 Mgal) each. Each of the other DSTs has a design capacity of 4,390 m^3 (1.16 Mgal) per tank. Tank 241-AN-107, with a capacity of 4,390 m^3 (1.16 Mgal), could be used as an aging waste storage tank. The planned usage of the DSTs during Phase 1 Waste Feed Delivery is detailed in the *Tank Waste Remediation System Operation and Utilization Plan to Support Waste Feed Delivery*, HNF-SD-WM-SP-012. This specification's requirements are based on the Case 3, Project Planning, DST usage scenario documented therein. Notice that Case 3S6D, 2006 Hot Start, will be documented in Revision 2 of HNF-SD-WM-SP-012 and will serve as the baseline case for the Readiness to Proceed-2 (RTP-2) RPP milestone. Case 3S6D incorporates changes to Case 3 to resolve feed staging tank issues, reflect changes in the assumptions, and include additional programmatic constraints, as directed by the DOE Office of River Protection. Preliminary quantitative and qualitative assessments were performed to determine the impacts of these changes to the DST subsystem requirements. Generally, the DST subsystem requirements were determined to be insensitive to the aforementioned changes; that is, the fundamental system-level requirements remained constant between Cases 3 and 3S6D (e.g., the need to prepare and transfer AN Farm tank waste to the vitrification facility). In instances where quantitative assessments were performed, the enveloping case was selected to develop the DST subsystem requirements.

The DST Diluent and Flush Subsystem must perform the functions: Deliver Diluent to Transfer-Associated Structures, Deliver Flush Water to Transfer-Associated Structures, Monitor and Control the DST Diluent and Flush Subsystem. The requirements for each of these subfunctions are identified in Section 3.2.1.

The DST System specification (*System Specification for the Double-Shell Tank System*, HNF-SD-WM-TRD-007) identifies several second-tier functions (Figures 3-1 and 3-2). The DST Diluent and Flush Subsystem function has been further decomposed as shown. These are shown as third- and fourth-tier functions in Figures 3-1 and 3-2. *Functional Analysis for Double-Shell Tank Subsystems*, HNF-5136, allocates the shaded third- and fourth-tier functions of Figures 3-1 and 3-2 to the DST Diluent and Flush Subsystem. Section 3.2.1 of this specification is organized to accommodate these shaded functions.

Figure 3-1. Double-Shell Tank Ventilation Subsystem Functions for Waste Storage.

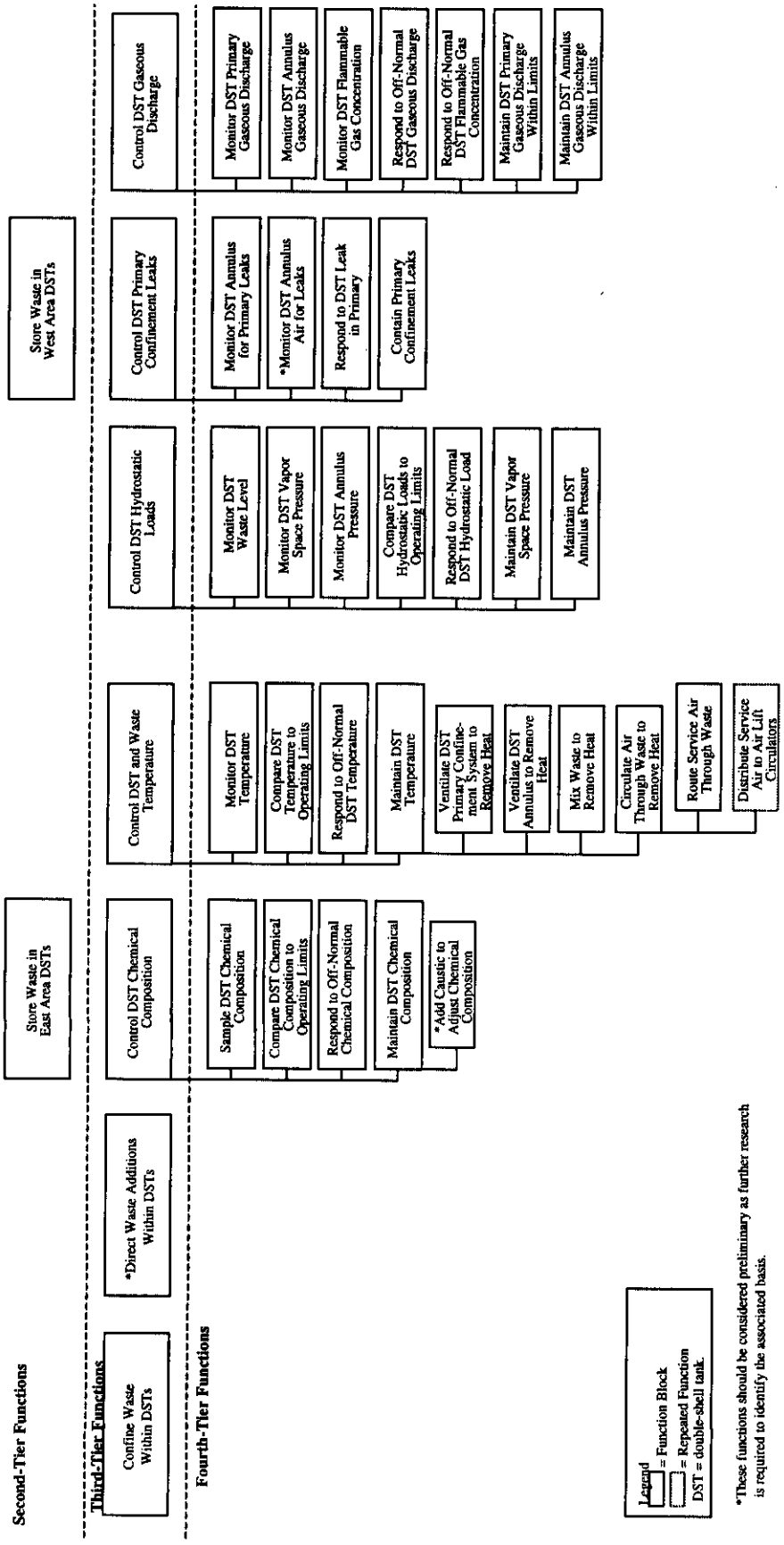

Figure 3-2. Double-Shell Tank Diluent and Flush Subsystem Functional Hierarchy for Waste Transfer.

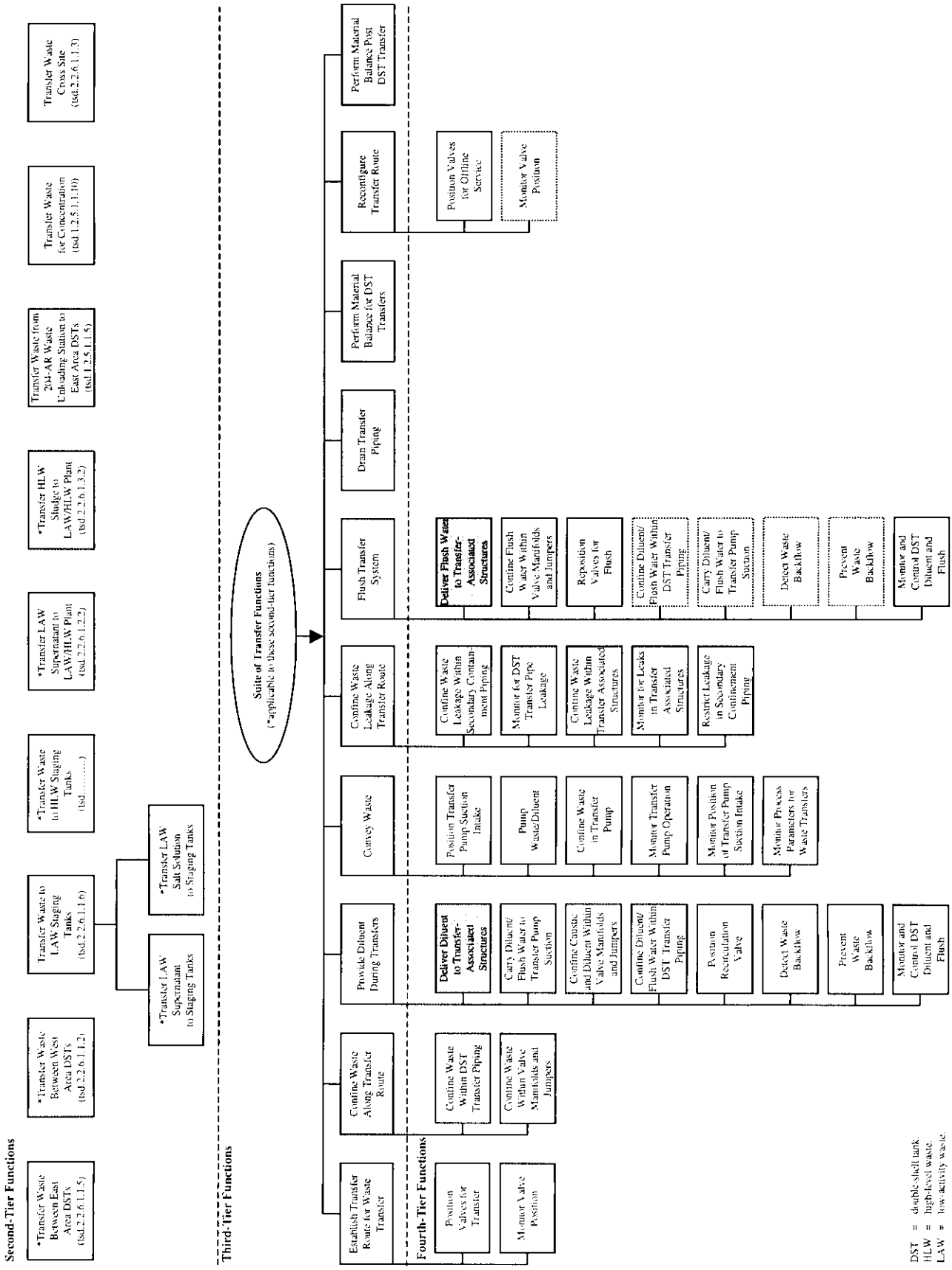

The DST System consists of the 12 subsystems identified in Figure 3-3. Five of these subsystems (electrical, raw water, potable water, service air, and instrument air) will be collected into one specification for the DST Utilities System. Several of these subsystems have been further subdivided to identify lower level subsystem/components. Subsystem specifications will be prepared for the subsystems/components shaded in Figure 3-3, because they will be constructed or modified in support of Phase 1 Waste Feed Delivery.

Figure 3-3. Double-Shell Tank System Architecture Tree.

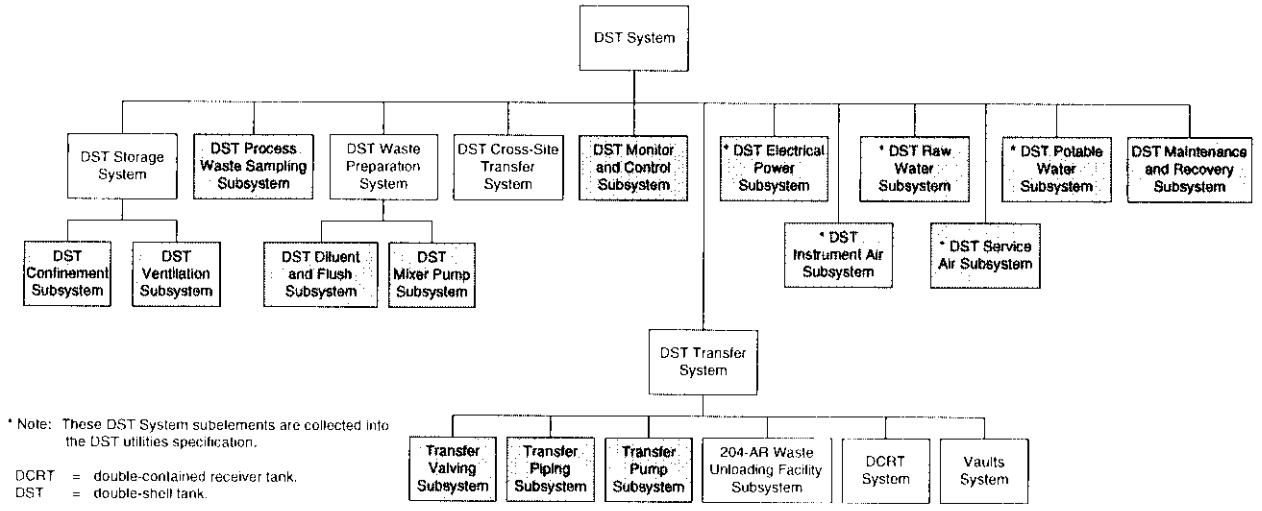

The primary interfaces between DST subsystems/components are shown in Figures 3-4 and 3-5. Figure 3-4 shows the primary DST mechanical system interfaces for eight subsystems. Different materials going between the subsystems are shown as different types of lines. For waste preparation, the mixer pump moves waste within the waste confinement subsystem (i.e., the tanks) at a high velocity to suspend undissolved solids and/or to mix supernatant. Once waste preparation is complete, waste is removed from the DST Confinement Subsystem source tank by the transfer pump and is routed by the valving subsystem through the piping subsystem toward its destination (i.e., another DST or the RPP Waste Treatment Plant). If the destination is another DST, the valving subsystem will direct the waste into the receiving DST. If the destination is the processing plant, the plant's waste receipt piping will route the waste into the plant.

The DST Confinement Subsystem must confine the tank waste during both in-tank waste processing (e.g., mixing, diluent addition) and in static storage. In either case, the DST Ventilation Subsystem draws air in from, and exhausts air out to, the external atmosphere to cool and to maintain confinement of the DST Confinement Subsystem vapors. Before exhausting the air from the primary and annulus tanks' vapor space to the environment, the DST Ventilation Subsystem HEPA filters remove radioactive particulates.

Figure 3-4. Subsystem for Double-Shell Tank Mechanical System Interfaces.

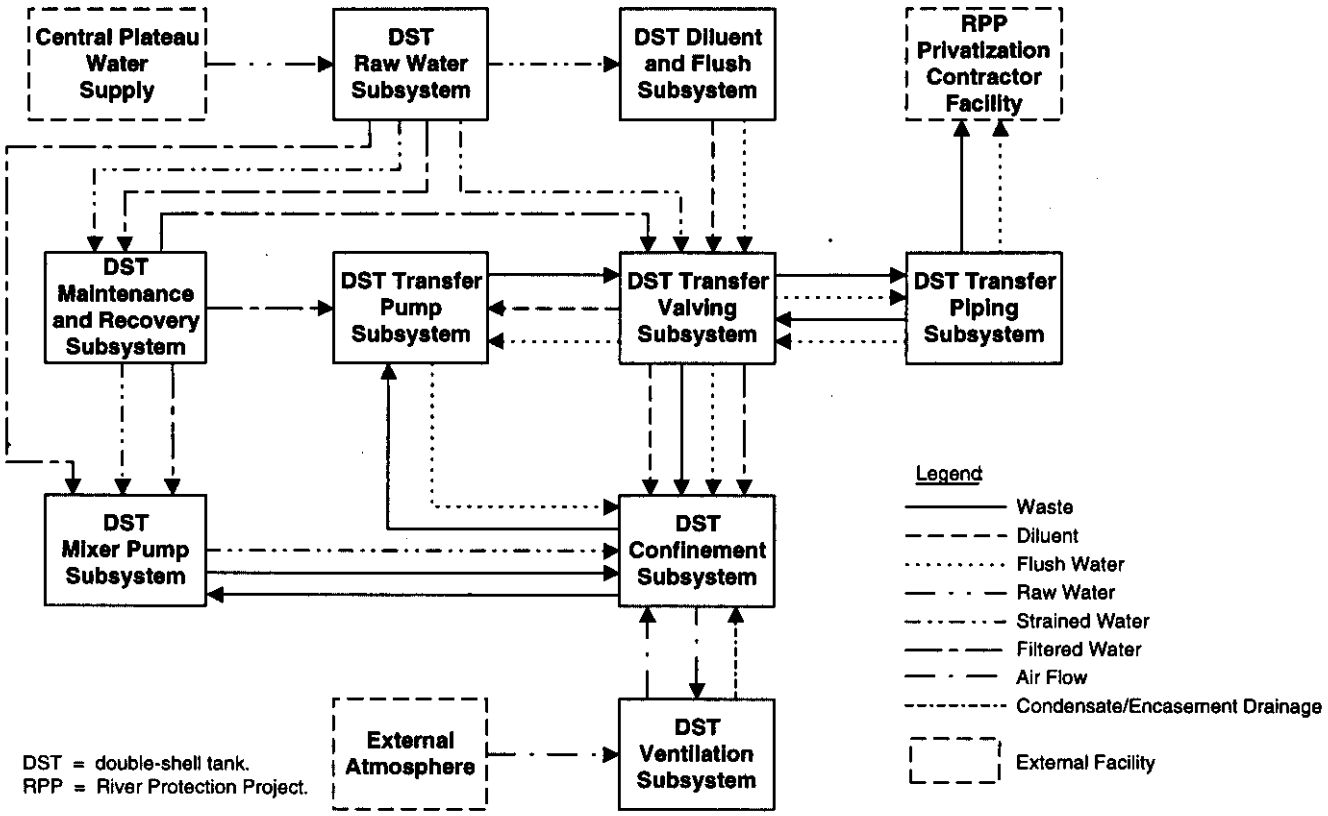

Figure 3-5. Interfaces for Double-Shell Tank Monitor and Control Subsystem.

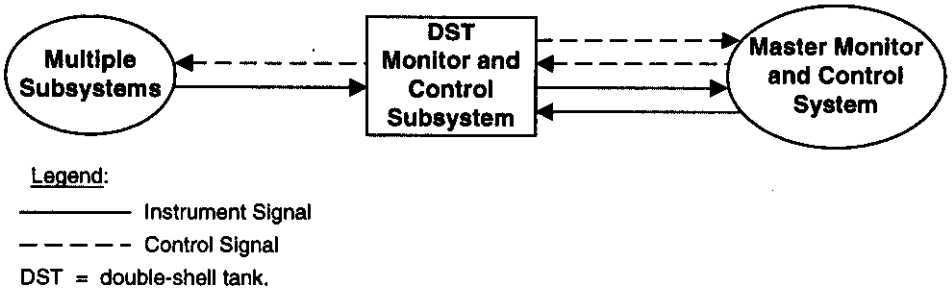

The DST Raw Water Subsystem receives water from the Site Raw Water Distribution System, where it is strained to remove large particulates before being used by the DST Diluent and Flush Subsystem. The DST Diluent and Flush Subsystem chemically adjusts the water for dilution or for flushing. The degree of chemical adjustment of diluent will depend on the batch of waste being transferred. The raw water is heated to match the waste temperature (see *Waste Feed Delivery Technical Basis*, HNF-1939, Volume II, Revisions 0a [Addendum 1-1], 0b [Addendum 2-1], and 0c [Addendum 3-1]).

Diluent is routed by the valving subsystem either to the transfer pump for in-line dilution of the waste or to the confinement subsystem for in-tank dilution. When a transfer is complete, the transfer pump, valving, and piping subsystems are flushed with water.

The DST Raw Water Subsystem filters water to remove small particles before the water is piped directly to the mixer pump and transfer valving subsystems. Filtered water is routed to the confinement subsystem via the transfer valving subsystem. Filtered water also can be routed to the mixer pump, the transfer pump, and the valve pit via the DST Maintenance and Recovery Subsystem for infrequent needs. Infrequent needs may include filling a mixer pump drive shaft and providing water to the pump seals.

The DST Maintenance and Recovery Subsystem will be used for many other infrequent needs that were not shown on the diagram for reasons of clarity. For example, raw water will be used to decontaminate the pumps when they are removed from the tanks. It also will be used in decontaminating the valve and pump pits.

Figure 3-5 generically shows how the DST Monitor and Control Subsystem interfaces with other systems. Subsystems shown in Figure 3-4 provide instrument data signals to the DST Monitor and Control Subsystem. The DST Monitor and Control Subsystem transmits selected data to the Master Monitor and Control System. The DST Monitor and Control Subsystem also receives data and control signals from the Master Monitor and Control System. Based on the data and control signals received, the DST Monitor and Control Subsystem sends control signals to the multiple DST subsystems.

3.1.1 Subsystem/Component Diagrams

Major subsystems for the DST Diluent and Flush Subsystem were chosen based on the subsystem's functional requirements and the DST System architecture. Figure 3-6 shows the architectural decomposition of the DST Diluent and Flush Subsystem. The major subsystems that have been identified are as follows:

- Diluent and Flush Structures
- Heating Equipment
- Chemical Unloading Equipment
- Diluent/Flush Solution Transfer Equipment
- Diluent and Flush Instrumentation and Controls.

Figure 3-7 is a schematic showing the general layout of the DST Diluent and Flush Subsystem. A general description of each subsystem and components is provided in Section 3.7.

Figure 3-6. Architectural Decomposition of the Double-Shell Tank Diluent and Flush Subsystem.

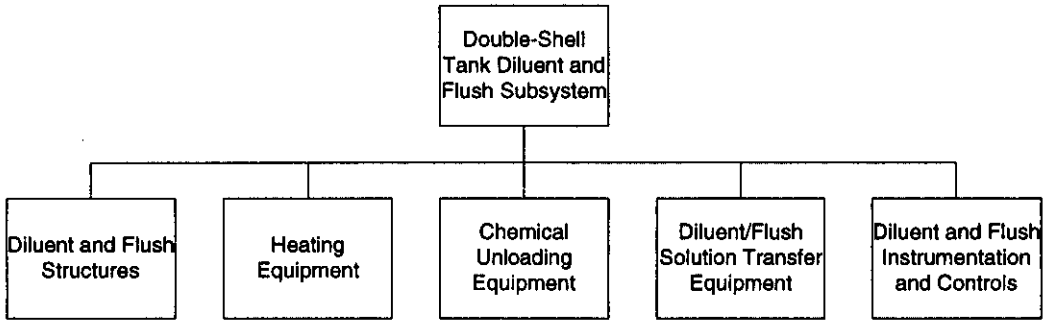

Figure 3-7. General Layout of the Double-Shell Tank Diluent and Flush Subsystem.

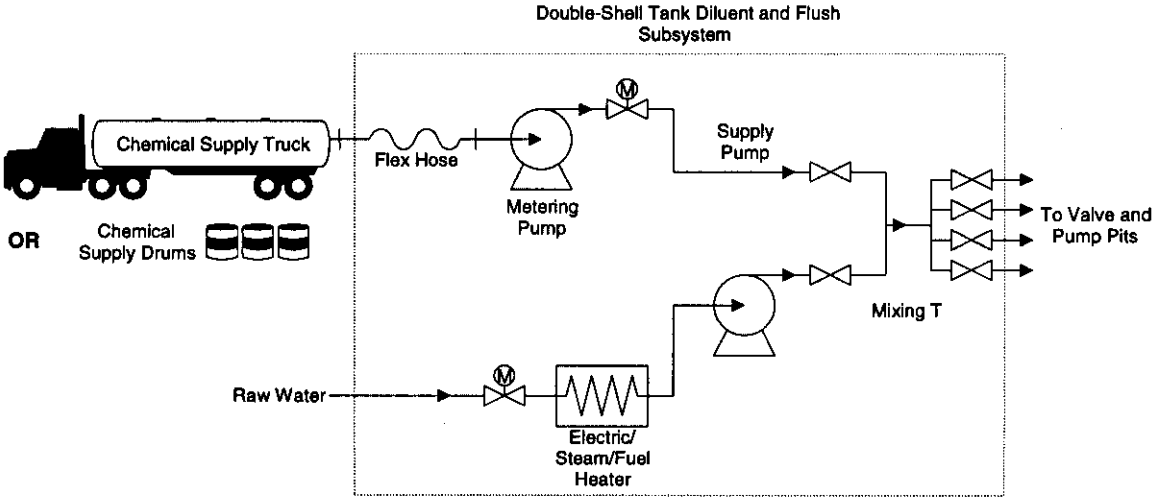

3.1.2 Interface Definition

This section identifies the major interfaces of the DST Diluent and Flush Subsystem with other systems. The interface descriptions that follow are intended to help define the subsystem boundaries. These interface relationships are illustrated in Figure 3-8. This section discusses the inputs from these interfacing systems and facilities. Outputs from the DST Diluent and Flush Subsystem to other systems and facilities are discussed in Section 3.2.1.

Figure 3-8. Major Interfaces of the Double-Shell Tank Diluent and Flush Subsystem.

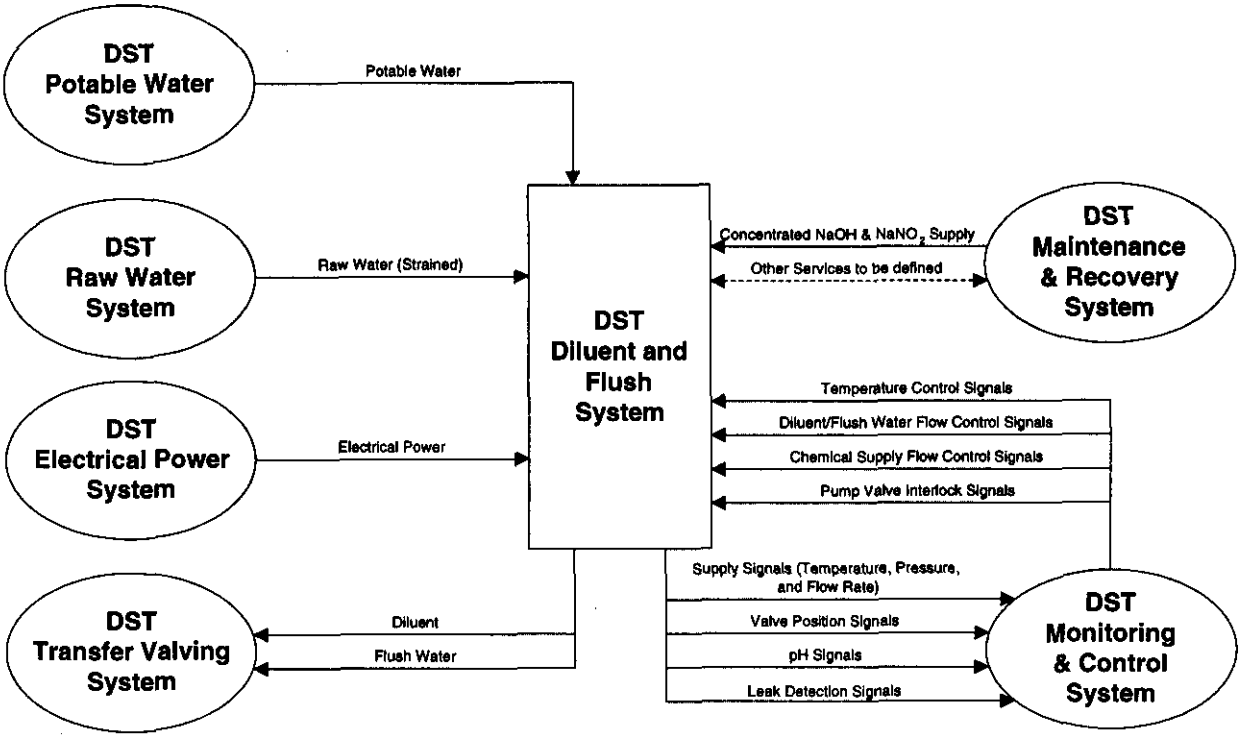

3.1.2.1 Functional Interfaces

3.1.2.1.1 Double-Shell Tank Electrical Power Subsystem. The DST Electrical Power Subsystem provides electrical power to the chemical metering, diluent/flush pumps, and other electrical loads of the DST Diluent and Flush Subsystem. Additional electrical power would be required if water heating is to be done using electrical heaters.

a. The DST Diluent and Flush Subsystem shall be capable of receiving 480 V ac, 3 phase power. The interface control documents shall be the means to manage power requirements.

3.1.2.1.2 Double-Shell Tank Raw Water Subsystem. The DST Raw Water Subsystem supplies raw water to the DST Diluent and Flush Subsystem. The DST Diluent and Flush Subsystem shall be capable of receiving raw water from the DST Raw Water Subsystem and containing and handling the water at the pressure it will be supplied.

a. The DST Diluent and Flush Subsystem shall be capable of receiving raw water at a continuous flow rate of at least 630 L/min (166 gal/min) and a minimum pressure of 552 kPa (80 lb/in^2 gauge).

3.1.2.1.3 Double-Shell Tank Potable Water Subsystem. The DST Potable Water Subsystem provides potable water to the DST Diluent and Flush Subsystem for use at the safety eyewash and shower stations. Potable water will not be connected to any other portions of the

DST Diluent and Flush Subsystem. A portable eyewash and shower station may be considered, and this would eliminate the interface with the potable water system.

3.1.2.1.4 Double-Shell Tank Monitor and Control Subsystem. The DST Monitor and Control Subsystem provides control signals from the operator-interface stations to the DST Diluent and Flush Subsystem. Control signals are generally sent to motor controllers that direct power to be supplied or removed from electrically operated equipment.

a. The DST Diluent and Flush Subsystem shall be capable of receiving industry standard control signals.

b. The DST Diluent and Flush Subsystem shall be capable of receiving a control function to terminate diluent/flush water supply at preset volumes from the DST Monitor and Control Subsystem.

3.1.2.1.5 Double-Shell Tank Maintenance and Recovery Subsystem. The DST Diluent and Flush Subsystem receives concentrated caustic and nitrite from the DST Maintenance and Recovery Subsystem. The physical interface is at the supply connections from the concentrated chemical supply trucks, tanks, or drums. The Maintenance and Recovery Subsystem performs preventive maintenance on the metering pump, supply pump, electric/steam heater and valves/hoses. The Maintenance and Recovery Subsystem also calibrates flow meter transmitters, pressure transmitters, temperature transmitters, pH transmitters and transducers, boiler temperature and process instruments, holding-tank level and temperature instruments, motor-operated valve position switches, and the chemical metering and pump flowmeters. The DST Maintenance and Recovery Subsystem performs corrective maintenance on the DST Diluent and Flush Subsystem by repairing/replacing flow transmitters, pressure transmitters/sensors, pit sensors and transmitters, holding-tank level transmitters, motor-operated valve position switches, temperature transmitters, pressure and temperature instruments, metering pumps, supply pumps, electric heaters, steam heaters, leaking pipes, flexible hoses and connections, flow controls, flow instrumentation, routing and waste transfer isolation valves, and valve position indicators.

a. The DST Diluent and Flush Subsystem shall use concentrated commercial-grade sodium hydroxide (commonly referred to as caustic soda) at a concentration of up to 50 wt% provided by the DST Maintenance and Recovery Subsystem.

b. The DST Diluent and Flush Subsystem shall use concentrated commercial-grade 40 wt% sodium nitrite ($NaNO_2$) provided by the DST Maintenance and Recovery Subsystem.

3.1.2.2 Physical Interfaces

Detailed physical interface definition and requirements associated with the DST Diluent and Flush Subsystem are captured in interface control documents that are application specific and are (to be) developed by line item project organizations responsible for the design of DST subsystems, as directed by the Waste Feed Delivery Program Office.

3.1.3 Major Component List

Major components of the DST Diluent and Flush Subsystem are listed in Section 3.1.1.

3.1.4 Government-Furnished Property List

Not applicable.

3.1.5 Government-Loaned Property Lists

Not applicable.

3.2 CHARACTERISTICS

This section contains the minimum requirements related to performance characteristics, physical characteristics, reliability, maintainability, environmental conditions, transportability, and flexibility and expansion. Minimum requirements are identified by SHALL statements, while design goals are identified by SHOULD statements. If a requirement cannot be satisfied, justification of an alternative design shall be submitted to the Design Authority for approval. The source documents that provide the basis for each requirement are identified in Appendix A.

3.2.1 Performance Characteristics

This section contains requirements related to the functionality and performance capabilities for the DST Diluent and Flush Subsystem.

3.2.1.1 Deliver Caustic or Diluent to Transfer-Associated Structures

Provide temperature-adjusted diluent at an adjustable flow rate to the transfer-associated structure to support initiation of waste transfer, dilution of waste during the transfer, and subsequent termination of the waste transfer. The initiation of waste transfer includes providing diluent at an increased flow rate, which serves to reduce or deny waste intake at the transfer pump suction intake to support transfer pump startup and preconditioning of the waste transfer route. The dilution of waste during the transfer includes providing diluent with flow rate and temperature adjusted to the levels required to support mobilization of the DST waste and to preclude precipitation of waste solids within the transfer route. The termination of the waste transfer includes providing diluent with flow rate increased to the transfer pump suction intake to reduce or deny waste intake at the transfer pump suction intake just prior to delivery of the flush water.

a. The DST Diluent and Flush Subsystem shall have the capability to preheat waste transfer lines by providing a continuous flow of water or solution that is at least two times the volume of the longest planned waste transfer line volume.

b. The DST Diluent and Flush Subsystem shall have the capability to provide heated water or solution at a minimum flow rate of 710 L/min (187 gal/min) at an operating pressure of 4480 kPa (650 lbf/in^2) with a maximum shutoff head of 6240 kPa (905 lbf/in^2).

c. The DST Diluent and Flush Subsystem shall have the capability to provide solutions to be used for waste transfer line preheating, in-line dilution, in-tank dilution, and tank-heel flushing at temperatures as high as 60 °C (140 °F).

d. The DST Diluent and Flush Subsystem shall have the capability to provide solutions to be used for in-line dilution at a flow rate as high as 200 L/min (53 gal/min) for periods up to 5 days.

e. The DST Diluent and Flush Subsystem shall provide concentrated sodium hydroxide solution at a concentration up to 50 wt% to adjust the chemical composition of DSTs.

f. The DST Diluent and Flush Subsystem shall be capable of adjusting the composition of sodium hydroxide and sodium nitrite from 0.010 M and 0.011 M, respectively, to maximums determined during detail design.

g. The DST Diluent and Flush Subsystem shall be capable of unloading the chemicals identified in Section 3.1.2.1.5.

3.2.1.2 Deliver Flush Water to Transfer-Associated Structures

Provide temperature-adjusted and chemically adjusted water at an adjustable flow rate to the transfer-associated structure to support termination of the waste transfer and corrosion protection of the transfer route. This function supports termination of the waste transfer by providing flush water, with flow rate increased to the transfer pump suction intake to reduce or deny waste intake at the transfer pump suction intake, thus allowing the flush water to dilute and remove liquid waste from the transfer path between the source DST and the transfer destination.

a. The DST Diluent and Flush Subsystem shall be capable of unloading the chemicals identified in Section 3.1.2.1.5.

b. The DST Diluent and Flush Subsystem shall be capable of preparing and providing flush solutions with compositions that are at least 0.01 M hydroxide and at least 0.011 M nitrite.

c. The DST Diluent and Flush Subsystem shall be capable of flushing each waste transfer line with a volume of solution that is twice the volume of the transfer line.

d. The DST Diluent and Flush Subsystem shall be capable of providing a flow of 630 L/min (166 gal/min) at a design pressure of 6,240 kPa (905 lbf/in^2) to the DST Transfer Valving Subsystem for flushing waste transfer lines.

3.2.1.3 Monitor and Control the Double-Shell Tank Diluent and Flush Subsystem

The DST Diluent and Flush Subsystem will monitor and control preparation and delivery of diluent and flush solutions. Monitoring and controlling include measuring, transmitting, receiving, displaying, comparing, and adjusting.

a. The DST Diluent and Flush Subsystem shall monitor temperature, pressure, flow rate, and solution compositions.

b. The DST Diluent and Flush Subsystem shall measure the quantity of heated water or solution provided to the transfer-associated structure.

c. The DST Diluent and Flush Subsystem shall have the capability to control the diluent solution temperature to within ±5 °C (9 °F).

d. In the event of a loss of power, the system shall fail such that no further water or chemicals can be added to a tank.

3.2.2 Physical Characteristics

This section contains requirements related to physical characteristics (maximum/minimum physical size, weight, shape, etc.).

a. Reserved.

3.2.3 Reliability

This section contains the requirements and other features that promote reliability.

The duty cycle of the DST Diluent and Flush Subsystem is expected to range from short duration (1 h) flushing operations up to five-to-seven day continuous in-line dilution operations. The following specifications help to ensure high availability during periods of operation.

a. The design life of the DST Diluent and Flush Subsystem shall be 35 years. Replacement of major components is allowable if this is the most cost-effective approach.

b. The DST Diluent and Flush Subsystem shall be capable of providing heated diluent/flush water after a single failure of an active component.

c. The DST Diluent and Flush Subsystem shall allow for local restart by the operator following actuation of a transfer system leak detector for the purpose of flushing the line.

3.2.4 Maintainability

The design shall consider the maintainability factors peculiar to the specific equipment to be used in the DST Diluent and Flush Subsystem.

a. Mean time to repair for the DST Diluent and Flush Subsystem, during unplanned outages, should be less than 24 hours. This time does not include logistics delay time or administrative delay time.

b. A single replaceable component of the DST Diluent and Flush Subsystem should be designed to enable replacement within 8 hours. This time does not include logistics delay time or administrative delay time.

3.2.5 Environmental Conditions

This section provides design requirements relevant to natural and induced environmental conditions.

3.2.5.1 Natural Environments

This section defines the natural conditions (e.g., weather).

a. The subsystem shall be designed for the natural environmental conditions specified in *Natural Phenomena Hazards, Hanford Site, Washington,* HNF-SD-GN-ER-501.

b. The subsystem shall be designed to withstand the natural phenomena hazards as specified in *Engineering Design and Evaluation,* RPP-PRO-097.

c. The containment skid shall be resistive to pressure gradients above and below the foundation and shall be capable of preventing failure caused by settlement, compression, or uplift.

3.2.5.2 Induced Environments

This section defines the induced environment impinging on the subsystem including waste chemistry and radiation.

3.2.5.2.1 Chemistry. The subsystem components shall be designed to perform their intended function in the chemical environment defined in the following requirements.

a. The DST Diluent and Flush Subsystem equipment shall be capable of receiving and diluting concentrated caustic solutions obtained from a supplier that are up to 50 wt%.

b. The DST Diluent and Flush Subsystem equipment shall be capable of receiving and diluting concentrated nitrite solutions obtained from a supplier that are up to 40 wt%.

3.2.5.2.2 Radiation. Not applicable.

3.2.6 Transportability

System components shall be designed to withstand the shock and vibration environments during normal transportation.

3.2.7 Flexibility and Expansion

Not applicable.

3.3 DESIGN AND CONSTRUCTION

The DST Diluent and Flush Subsystem shall comply with the general design guidelines provided in *General Design Criteria*, DOE Order 6430.1A, Sections 1300-7 and 1323.

3.3.1 Materials, Processes, and Parts

This section defines design and construction requirements governing the use of materials and processes.

a. The piping shall meet the applicable design and construction requirements contained in *Process Piping*, ASME B31.3.

b. All valves shall meet the applicable design and construction requirements contained in *Valves-Flanged, Threaded, and Welding End*, ASME B16.34.

c. All concrete work shall meet the applicable design and construction requirements contained in *Building Code Requirements for Reinforced Concrete*, ACI 318.

d. Electrical equipment enclosures shall be, as a minimum, NEMA-Type 4 or 4X, per *Industrial Controls and Systems*, NEMA ICS 6. Electrical enclosures shall have the cover secured by a toggle-actuated handle to minimize difficulties in opening and fully securing the enclosure.

e. Dry disconnect couplings shall be provided for connections to the chemical supply.

f. Buried portions of the diluent/flush supply lines shall be back-filled with a noncorrosive, porous, homogeneous medium to ensure that the piping is fully and uniformly supported.

g. DST Diluent and Flush Subsystem routing valves shall be provided with position switches.

h. There shall be provisions for prevention and detection of backflow from the DST Transfer Valving Subsystem. Requirements for prevention and detection of waste backflow are contained in *Double-Shell Tank Transfer Valving Subsystem Specification*, HNF-4160, Sections 3.2.1.13 and 3.2.1.14.

i. Sodium hydroxide delivery piping shall be in accordance with AC 5.23 in HNF-SD-WM-TSR-006.

j. The DST Diluent and Flush Subsystem shall be designed for positive removal (such as a locked drainage valve) of chemically contaminated liquids and uncontaminated precipitation.

k. For the connection to the DST Transfer Valving Subsystem, the DST Diluent and Flush Subsystem shall use material that can be welded to 304L stainless steel and is compatible with 304L stainless steel.

l. The DST Diluent and Flush Subsystem shall comply with "Carriage By Public Highway," "General," Title 49 CFR 177.834, parts (I)(2)-(5), during tanker unloading.

m. The DST Diluent and Flush Subsystem shall be capable of immediately (without interruption of flow) transitioning from providing a flush solution to providing a diluent solution and from providing a diluent solution to providing a flush solution.

n. The piping for conveying dilute sodium nitrite and sodium hydroxide solutions from the Diluent and Flush Station to the appropriate valve pit shall meet the requirements of DOE Order 6430.1A sections 1300-7.1 and 1300-7.4.

o. The DST Diluent and Flush Subsystem shall be controllable by the DST Monitor and Control Subsystem. Chemical adjustments to flush and diluent solutions, temperature adjustments of the solutions, flow rate adjustments of the solutions, and the shutdown of the subsystem shall be possible from the DST Monitor and Control Subsystem.

p. The DST Diluent and Flush Subsystem shall be capable of adjusting the flow rate of water or solution to support transitions from the line preheating application to the in-line dilution application.

q. The DST Diluent and Flush Subsystem shall be capable of adjusting the flow rate and chemical composition of solutions to support transitions from the in-line dilution application to the waste transfer line flush application.

r. The diluent/flush supply piping to the valve and pump pits shall have a design pressure rating at least 6,240 kPa (905 lbf/in^2).

3.3.2 Electromagnetic Radiation

The subsystem shall comply with electromagnetic radiation emission requirements set forth in *A List of EMI/EMC Requirements*, HNF-2962.

3.3.3 Nameplates and Product Marking

This section defines marking and nameplate requirements of the various assemblies and subassemblies that make up the DST Diluent and Flush Subsystem.

a. The subsystem shall label new equipment and/or modifications to existing equipment in a standardized format in accordance with the tank farm labeling program as specified in *RPP Administration*, "Tank Farm Operations Equipment Labeling," HNF-IP-0842, Volume II, Section 6.1.

b. All chemical and other pipelines shall be individually marked in accordance with DOE Order 6430.1A, Section 1323.4.3, and ASME B31.3.

3.3.4 Workmanship

Reserved. The requirements for workmanship are to be addressed in lower level project design documentation (drawings, procurement specifications, etc.).

3.3.5 Interchangeability

All like equipment and parts shall be interchangeable/standardized to the maximum extent practical.

3.3.6 Safety

The subsystem shall be designed to protect the public, environment, workers, and equipment in accordance with the requirements of this section.

3.3.6.1 Personnel Safety

Personnel shall be protected from work place hazards in accordance with the following requirements:

a. The subsystem shall incorporate design features that comply with the applicable requirements of 29 CFR 1910, Subparts D, E, G, J, L, M, O, and S.

b. The DST Diluent and Flush Subsystem shall be designed to keep personnel exposure as low as reasonably achievable (ALARA) in accordance with Section 12.4 of HNF-IP-0842, Volume VII.

c. Safety shower and eyewash stations shall be provided at the Diluent and Flush Stations and shall comply with *Emergency Eyewash and Shower Equipment*, ANSI Z358.1.

3.3.6.2 Equipment Protection

The subsystem shall be designed to avoid damage to other components.

a. The DST Diluent and Flush Subsystem pipeline shall be designed and operated such that water hammer events are precluded from occurring, or an analysis is performed to determine the adequacy of the design to handle maximum water hammer events.

3.3.6.3 Environmental Safety

The DST Diluent and Flush Subsystem shall be designed to protect the public and environment in accordance with the following requirements:

a. The safety classification of structures, systems, and components for the DST Diluent and Flush Subsystem shall be determined using the process described in Sections 6.9 – 6.12 of HNF-IP-0842, Volume IV and shall be based on existing, safety analyses conducted in *Tank Waste Remediation System Final Safety Analysis Report,* HNF-SD-WM-SAR-067, and *Safety Assessment for Initial Tank Retrieval System, Project W-211,* HNF-SD-W211-PSAD-001. Unreviewed safety question screening will be required for system installation in accordance with "Unreviewed Safety Questions," HNF-IP-0842, Volume IV, Section 5.4.

b. The Diluent and Flush Station (containing piping, tanks, pumps, etc.) shall have adequate containment for unmitigated leaks or spills.

3.3.7 Human Performance/Human Engineering

The subsystem shall be designed for ease of operation.

a. The DST Diluent and Flush Subsystem design shall comply with DOE Order 6430.1A, Section 1300.12, "Human Factors Engineering."

3.3.8 Decontamination and Decommissioning

This section defines features found to enhance decontamination at the end of the DST Diluent and Flush Subsystem's life.

a. All components that may become contaminated with radioactive or other hazardous materials under normal or abnormal operating conditions shall be designed to incorporate measures to simplify future decontamination and decommissioning in accordance with DOE Order 6430.1A, Section 1300-11.

3.4 DOCUMENTATION

This section defines the procedures that will control various documents associated with the DST Diluent and Flush Subsystem.

a. Records, documents, and drawing control pertinent to design functions shall be in accordance with *Quality Assurance Records Standards*, RPP-PRO-222, and *Document Control Program Standards*, HNF-PRO-224. Engineering document development shall be in accordance with *Preparation and Control Standards for Engineering Drawings*, RPP-PRO-709.

b. All DST Diluent and Flush Subsystem structures, systems, and components (SSC) shall be incorporated into the master equipment list in accordance with the component index process requirements defined in Section 7.3 of HNF-IP-0842, Volume V.

3.5 LOGISTICS

This section identifies maintenance infrastructure support requirements.

3.5.1 Maintenance

Facility design shall provide for routine preventive maintenance/calibration, where required, and maintenance, repair, or replacement of equipment subject to failure. The subsystem shall be designed to be maintained in accordance with the following requirements:

a. Accessible portions of the DST Diluent and Flush Subsystem shall be designed for limited contact maintenance.

b. Below-grade portions of the diluent/flush supply lines shall be designed to require no maintenance.

3.5.2 Supply

The subsystem shall use readily available commercial parts and components to the greatest extent practical.

a. Minimum numbers of spares for like components shall be determined, based on mean time between failure and the number of like components installed.

3.5.3 Facility and Facility Equipment

Not applicable.

3.6 PERSONNEL AND TRAINING

Not applicable.

3.7 CHARACTERISTICS OF SUBELEMENTS

The major elements of the DST Diluent and Flush Subsystem are as follows:

- Diluent and Flush Structures
- Heating Equipment
- Chemical Unloading Equipment
- Diluent/Flush Solution Transfer Equipment
- Diluent and Flush Instrumentation and Controls.

3.7.1 Diluent and Flush Structures

The DST Diluent and Flush Subsystem structure includes a supporting portion and a protective or enclosure portion. The DST Diluent and Flush Subsystem structure provides four primary functions:

- Shelters the components/equipment from harmful elements of the weather
- Provides containment for bulk chemicals
- Provides a geometric configuration of the components/equipment in one concise area
- Provides safety shower and eyewash stations at the Diluent and Flush Stations.

3.7.2 Heating Equipment

Raw water or treated water is heated to reach a preset temperature if necessary for a given application. The preset temperature is dependent on the specific tank waste characteristics and the application of the water. Heating equipment includes the heater — whether it is electric or fossil fuel, or steam — the tank or containment where water or solution is to be heated, valves, and measurement instruments. Fossil fuel fired boilers may require an air permit in accordance with "Operating Permit Regulation," WAC 173-401.

3.7.3 Chemical Unloading Equipment

Chemical unloading equipment is expected to include connections to a source of concentrated liquid sodium hydroxide and sodium nitrite, transfer lines, mixing equipment, measurement instruments, and metering pumps.

3.7.4 Diluent and Flush Solution Transfer Equipment

Diluent/flush solution transfer equipment is expected to consist of transfer pumps, measurement instrumentation, transfer lines, and fittings or connections.

3.7.5 Diluent and Flush Instrumentation and Controls

A typical instrumentation and control system comprises four major subsystem: sensors, which provide electrical or mechanical analogs of operating variables; telemetry, which provides for the transfer of sensor information to a central collection point; central control, which provides for the interrogation of sensors, the recording and processing of sensor outputs, and the routing of processed data to displays or storage; and displays, which present processed data in a convenient form. Instrumentation is installed on the Diluent and Flush Subsystem to provide safe and reliable operation.

3.8 PRECEDENCE

Except in those instances where Washington State has been granted regulatory authority by the Federal Government, the hierarchical relationship among requirements specified in Section 3.0 is as follows:

- Federal requirements (e.g., *Code of Federal Regulations*, DOE orders)
- State requirements (e.g., Revised Code of Washington, as specified in the *Washington Administrative Code*)
- Local ordinances
- RPP procedures
- National consensus codes and standards.

The hierarchy is useful in establishing the relative order of precedence of the requirements documents levied in this specification.

3.9 SECURITY

The subsystem shall be designed such that access controls to radiation and high-radiation areas meet the requirements of *Tank Farms Radiological Control Manual (TFRCM)*, HNF-5183 (local implementation of 10 CFR 835).

3.10 COMPUTER RESOURCE RESERVE CAPACITY

Not applicable.

4.0 QUALITY ASSURANCE PROVISIONS

Quality assurance for the DST Diluent and Flush Subsystem shall be performed in accordance with "Quality Assurance Program," HNF-IP-0842, Volume XI, Section 1.0.

4.1 GENERAL

Quality assurance provisions, as defined in Section 4.2, shall be conducted during the design and development of the DST Diluent and Flush Subsystem to provide assurance of compliance with the requirements of this specification. Field verification, which takes place during the construction/turnover life-cycle phase, is not addressed in this specification. Field verification is addressed at the construction project level in operational test plans/procedures and acceptance test plans/procedures.

4.1.1 Responsibility

The design agent shall be responsible for the performance and documentation of design verifications (see Section 4.2) for each subsystem developed in accordance with this specification. Design verifications shall be conducted at the design agent's facilities or the facilities of the design agent's choice with the approval of the sponsor organization. The sponsor organization reserves the right to witness the specified design verifications.

4.1.2 Special Tests

The following design verification qualification testing requirements apply to the qualification tests of the DST Diluent and Flush Subsystem components. These test requirements correlate to the qualification testing of the design to the requirements of Section 3.0 of this specification. The design agent is responsible for planning and executing the required qualification tests.

a. Seat closure tests shall be performed for diluent and flush valves in accordance with the test methods in ASME B16.34 and *Pressure Testing of Steel Valves*, MSS-SP-61. Seat leakage from each flow side to the isolated port shall be within the limits specified in MSS-SP-61.

b. Shell tests shall be performed for diluent and flush valves in accordance with ASME B16.34. No visible leakage at pressure boundary walls is permissible at the 52 °C (125 °F) test pressure conditions except for valve stem leakage. There shall be no indication of valve stem leakage at the 38 °C (100 °F) test pressure condition.

c. Electrical materials and equipment shall be Underwriters' Laboratories (UL) or factory-mutual tested, with label attached, for the purpose intended, whenever such products are available. Where no UL or factory-mutual listed products of the type are available, testing and certification by the RPP authorized representative or by a nationally recognized testing agency shall be acceptable.

4.2 DESIGN VERIFICATION

Design verification shall be performed on the DST Diluent and Flush Subsystem, as represented in design drawings, prototypes, engineering models, etc., for the purposes of verifying that the design meets the requirements of this specification. Design verification is subject to the procedure identified in *Engineering Requirements*, RPP-PRO-1819, Section 2.5.1. Inspection of the subsystem design to ensure compliance with the requirements of Section 3.0 shall be performed by one or more of the following methods: qualification testing, reviews, and/or alternate calculations. The verification method(s) that applies to each specification requirement is identified in Appendix A. Definitions of qualification testing, reviews, and alternate calculations are as follows.

a. Qualification testing is a design verification method consisting of tests on hardware representative of the design being verified. Qualification testing can be subdivided into methods that consist of checking functional operation (Demonstration) and methods that consist of measuring specific hardware inputs/outputs (Test) to verify compliance of the design with requirements.

   (i) Demonstration is a subcategory of the "qualification testing" design verification method. Demonstration is limited to readily observable functional operation to determine compliance with requirements. Demonstration does not require the use of special equipment or sophisticated instrumentation.

   (ii) Test is another subcategory of the "qualification testing" design verification method. Test employs technical means including, but not limited to, the evaluation of functional characteristics by use of special equipment or instrumentation and the application of established principles and procedures to determine compliance with requirements. The evaluation of data derived from test is an integral part of Test.

b. Review is a design verification method that consists of an investigation of the existing design information. This can be done via a simple review of the design media (Examination) or a rigorous analysis of the design, as represented in the design media (Analysis).

   (i) Examination is a subcategory of the "review" design verification method. Examination consists of investigation without the use of special laboratory equipment or procedures to determine compliance with requirements. Examination can be performed on design media such as drawings, design reports, etc.

   (ii) Analysis is a subcategory of the "review" design verification method. Analysis takes the form of processing accumulated results and conclusions, intended to provide proof that verification of a requirement has been accomplished. The analytical results may comprise a compilation/interpretation of existing information or may be obtained from lower level examination, tests, demonstrations, or analyses.

c. Alternate calculation is a verification of a calculation or analysis using alternate methods or procedures.

Field verification of DST Diluent and Flush Subsystem performance/design features and acceptance inspection of construction is called out in Section 2.5.2 of RPP-PRO-1819.

This page intentionally left blank.

5.0 PREPARATION FOR DELIVERY

Safety-Class and Safety-Significant SSCs will require special packaging to protect against corrosion, contamination, physical damage, or any effect that would lower the quality or cause the items to deteriorate during the time they are shipped and handled. Packaging, receipt, and storage requirements will depend on the classification level of the items shown in *Quality Assurance Requirements for Nuclear Facility Applications*, ASME NQA-1, Subpart 2.2, Section 3-2. Lower level specifications (e.g., procurement specifications) will establish the specific packaging requirements for SSCs.

This page intentionally left blank.

6.0 NOTES

6.1 DEFINITIONS

Diluent—Heated water that may be treated with NaOH and $NaNO_2$, used for in-line or in-tank dilution of waste, or used for tank-heel flushing.

Flush Solution—Water treated with 0.01 M [NaOH] and 0.011 M [$NaNO_2^-$].

General Service (GS) SSC—Structures, systems, and components (SSC) not classified as either Safety-Class or Safety-Significant.

RPP Design Authority—A qualified engineer responsible for implementation of authorization basis requirements into the facility design.

Safety-Class (SC) SSC—Safety functions performed by Safety-Class SSCs prevent or mitigate releases to the public that would otherwise exceed the offsite radiological risk guidelines or prevent a nuclear criticality.

Safety-Significant (SS) SSC—Safety functions performed by Safety-Significant SSCs prevent or mitigate releases of radiological materials to onsite workers and toxic chemicals to the offsite public and onsite workers. Safety-Significant SSCs also include those safety SSCs that protect the facility worker from serious injury (or fatality) because of hazards not controlled by institutional safety programs.

> NOTE: Safety-Significant SSC distinguishes a specific category of SSCs other than Safety-Class SSCs. It should not be confused with the generic modifier "safety significant" used in DOE orders (e.g., *Nuclear Safety Analysis Reports*, DOE 5480.23).

Shall—Denotes a requirement.

Should—Denotes a recommendation. If a "should" requirement cannot be satisfied, justification of an alternative design shall be submitted to the Design Authority for approval.

Transfer-Associated Structure—Pump pits, valve pits, diversion boxes, or cleanout boxes.

Treated Water—Water used for flushing waste transfer lines that has been treated with sodium hydroxide and/or sodium nitrite to form a dilute solution to control corrosion rates in the piping.

6.2 LIST OF TERMS

ANSI	American National Standards Institute
ASME	American Society of Mechanical Engineers
CFR	*Code of Federal Regulations*
DOE	U.S. Department of Energy
DST	double-shell tank

GS	general service
NEMA	National Electrical Manufacturers' Association
RPP	River Protection Project
SC	Safety-Class
SS	Safety-Significant
SSC	structures, systems, and components
TBD	to be determined
TBR	to be refined
UL	Underwriters Laboratories, Inc.
WAC	*Washington Administrative Code*

7.0 REFERENCES

DOE Order 5480.23, 1994, *Nuclear Safety Analysis Reports*, U.S. Department of Energy, Washington, D.C.

HNF-1939, Rev. 0a, 1999, *Waste Feed Delivery Technical Basis*, Vol. II, Addendum 1-1, "Waste Feed Delivery Flow Sheet for Tank 241-AZ-101," Numatec Hanford Company for Fluor Daniel Hanford, Inc., Richland, Washington.

HNF-1939, Rev. 0b, 1999, *Waste Feed Delivery Technical Basis*, Vol. II, Addendum 2-1, "Waste Feed Delivery Flow Sheet for Tank 241-AN-105," Numatec Hanford Company for Fluor Daniel Hanford, Inc., Richland, Washington.

HNF-1939, Rev. 0c, 1999, *Waste Feed Delivery Technical Basis*, Vol. II, Addendum 3-1, "Waste Feed Delivery Flow Sheet for Tank 241-AN-104," Numatec Hanford Company for Fluor Daniel Hanford, Inc., Richland, Washington.

HNF-4160, 2001, *Double-Shell Tank Transfer Valving Subsystem Specification*, Rev.1, Numatec Hanford Corporation, Richland, Washington.

HNF-5136, 2000, *Functional Analysis for Double-Shell Tank Subsystems,* Rev. 0, Numatec Hanford Corporation for CH2M HILL Hanford Group, Inc., Richland, Washington.

HNF-SD-WM-SP-012, 1999, *Tank Waste Remediation System Operation and Utilization Plan to Support Waste Feed Delivery,* Rev. 1, Numatec Hanford Corporation, Lockheed Martin Hanford Corporation, and COGEMA Engineering Corporation for Fluor Daniel Hanford, Inc., Richland, Washington.

HNF-SD-WM-TRD-007, 2000, *System Specification for the Double-Shell Tank System*, Rev. 0, Numatec Hanford Corporation, Richland, Washington.

WAC 173-401, 1999, "Operating Permit Regulation," *Washington Administrative Code*, as amended.

This page intentionally left blank.

APPENDIX A

SOURCE DOCUMENTS AND TEST METHODS

This page intentionally left blank.

APPENDIX A

SOURCE DOCUMENTS AND TEST METHODS (16 SHEETS)

Section	Function/Requirement	Source Document(s)	Remarks	Verification Method					
				Exam	Demo	Test	Anal	Alt Calc	N/A
3.1.2.1.1.a	The DST Diluent and Flush Subsystem shall be capable of receiving 480 V ac, 3 phase power. The interface control documents shall be the means to manage power requirements.	RPP-5227			X	X			
3.1.2.1.2.a	The DST Diluent and Flush Subsystem shall be capable of receiving raw water at a continuous flow rate of at least 630 L/min (166 gal/min) and a minimum pressure of 552 kPa (80 lb/in^2 gauge).	RPP-4878; HNF-4157; RPP-5346		X					
3.1.2.1.4.a	The DST Diluent and Flush Subsystem shall be capable of receiving industry standard control signals.	HNF-4155			X				
3.1.2.1.4.b	The DST Diluent and Flush Subsystem shall be capable of receiving a control function to terminate diluent/flush water supply at preset volumes from the DST Monitor and Control Subsystem.	RPP-4878		X					
3.1.2.1.5.a	The DST Diluent and Flush Subsystem shall use concentrated commercial-grade sodium hydroxide (commonly referred to as caustic soda) at a concentration of up to 50 wt% provided by the DST Maintenance and Recovery Subsystem.	HNF-2938, Appendix F.1.10, "Adjustment to Tanks AN-102 and AN-107 Waste to Meet Corrosion Specifications"	A 19 M caustic concentration is needed to adjust the waste. Higher caustic concentrations are not expected.	X					
3.1.2.1.5.b	The DST Diluent and Flush Subsystem shall use concentrated commercial-grade 40 wt% sodium nitrite ($NaNO_2$) provided by the DST Maintenance and Recovery Subsystem.	RPP-4878		X					

APPENDIX A

SOURCE DOCUMENTS AND TEST METHODS (16 SHEETS)

Section	Function/Requirement	Source Document(s)	Remarks	Verification Method					
				Exam	Demo	Test	Anal	Alt Calc	N/A
3.2.1.1.a	The DST Diluent and Flush Subsystem shall have the capability to preheat waste transfer lines by providing a continuous flow of water or solution that is at least two times the volume of the longest planned waste transfer line volume.	RPP-4878 and Attachment 2; HNF-5442			X		X		
3.2.1.1.b	The DST Diluent and Flush Subsystem shall have the capability to provide heated water or solution at a minimum flow rate of 710 L/min (187 gal/min) at an operating pressure of 4480 kPa (650 lbf/in^2) with a maximum shutoff head of 6240 kPa (905 lbf/in^2).	RPP-4878 and Attachment 2; HNF-5442 RPP-5346					X		
3.2.1.1.c	The DST Diluent and Flush Subsystem shall have the capability to provide solutions to be used for waste transfer line preheating, in-line dilution, in-tank dilution, and tank-heel flushing at temperatures as high as 60 °C (140 °F).	RPP-4878 and Attachment 2; HNF-1939, Vol. III	195 °F is the maximum waste temperature. The heated diluent temperature will not exceed this limit. 68 °F is ambient temperature and is expected to be the minimum temperature of waste in DSTs.	X					
3.2.1.1.d	The DST Diluent and Flush Subsystem shall have the capability to provide solutions to be used for in-line dilution at a flow rate as high as 200 L/min (53 gal/min) for periods up to 5 days.	RPP-4878 and Attachment 2; HNF-1939, Vol. III					X		
3.2.1.1.e	The DST Diluent and Flush Subsystem shall provide concentrated sodium hydroxide solution at a concentration up to 50 wt% to adjust the chemical composition of DSTs.	RPP-4878					X		

APPENDIX A

SOURCE DOCUMENTS AND TEST METHODS (16 SHEETS)

Section	Function/Requirement	Source Document(s)	Remarks	Verification Method					
				Exam	Demo	Test	Anal	Alt Calc	N/A
3.2.1.1.f	The DST Diluent and Flush Subsystem shall be capable of adjusting the composition of sodium hydroxide and sodium nitrite from 0.010 M and 0.011 M, respectively, to maximums determined during detail design.	RPP-4878		X					
3.2.1.1.g	The DST Diluent and Flush Subsystem shall be capable of unloading the chemicals identified in Section 3.1.2.1.5.	RPP-4878			X				
3.2.1.2.a	The DST Diluent and Flush Subsystem shall be capable of unloading the chemicals identified in Section 3.1.2.1.5.	RPP-4878			X				
3.2.1.2.b	The DST Diluent and Flush Subsystem shall be capable of preparing and providing flush solutions with compositions that are at least 0.01 M hydroxide and at least 0.011 M nitrite.	RPP-4878	Meets DST minimum chemical requirements. 140 gal/min (6 ft/s through 3-in. Schedule 40 pipeline) is minimum transfer velocity that will keep expected solids suspended.				X		
3.2.1.2.c	The DST Diluent and Flush Subsystem shall be capable of flushing each waste transfer line with a volume of solution that is twice the volume of the transfer line.	RPP-4878 HNF-1939, Vol. III					X		
3.2.1.2.d	The DST Diluent and Flush Subsystem shall be capable of providing a flow of 630 L/min (166 gal/min) at a design pressure of 6240 kPa (905 lbf/in^2) to the DST Transfer Valving Subsystem for flushing waste transfer lines.	RPP-5346					X		

APPENDIX A

SOURCE DOCUMENTS AND TEST METHODS (16 SHEETS)

Section	Function/Requirement	Source Document(s)	Remarks	Verification Method					
				Exam	Demo	Test	Anal	Alt Calc	N/A
3.2.1.3.a	The DST Diluent and Flush Subsystem shall monitor temperature, pressure, flow rate, and solution compositions.	HNF-4155		X					
3.2.1.3.b	The DST Diluent and Flush Subsystem shall measure the quantity of heated water or solution provided to the transfer- associated structure.	RPP-4878		X					
3.2.1.3.c	The DST Diluent and Flush Subsystem shall have the capability to control the diluent solution temperature to within ±5 °C (9 °F).	RPP-4878 and Attachment 3			X				
3.2.1.3.d	In the event of a loss of power, the system shall fail such that no further water or chemicals can be added to a tank.	OSD-T-151-00007		X		X			
3.2.2	This section contains requirements related to physical characteristics (maximum/minimum physical size, weight, shape, etc.).	N/A							X
3.2.2.a	Reserved.	N/A							X
3.2.3.a	The design life of the DST Diluent and Flush Subsystem shall be 35 years. Replacement of major components is allowable if this is the most cost-effective approach.	HNF-SD-WM-SP-012, Section 2.6	Phase II retrieval operations are scheduled to complete in 2034. 12-year component life was chosen so only two replacements would be required during 35-year design life.						X
3.2.3.b	The DST Diluent and Flush Subsystem shall be capable of providing heated diluent/flush water after a single failure of an active component.	HNF-4716, Appendix E		X					

APPENDIX A

SOURCE DOCUMENTS AND TEST METHODS (16 SHEETS)

Section	Function/Requirement	Source Document(s)	Remarks	Verification Method					
				Exam	Demo	Test	Anal	Alt Calc	N/A
3.2.3.c	The DST Diluent and Flush Subsystem shall allow for local restart by the operator following actuation of a transfer system leak detector for the purpose of flushing the line.	HNF-SD-WM-TSR-006, Section 3.1.3	Transfer system draining and flushing may be performed with an inoperable or alarming leak detection.			X			
3.2.4	The design shall consider the maintainability factors peculiar to the specific equipment to be used in the DST Diluent and Flush Subsystem.	DOE Order 6430.1A, Section 1300-3.5	"Maintenance"						X
3.2.4.a	Mean time to repair for the DST Diluent and Flush Subsystem, during unplanned outages, should be less than 24 hours. This time does not include logistics delay time or administrative delay time.	HNF-5141							X
3.2.4.b	A single replaceable component of the DST Diluent and Flush Subsystem should be designed to enable replacement within 8 hours. This time does not include logistics delay time or administrative delay time.	HNF-5141							X
3.2.5	This section provides design requirements relevant to natural and induced environmental conditions.	N/A							X
3.2.5.1.a	The system shall be designed for the natural environmental conditions specified in *Natural Phenomena Hazards, Hanford Site, Washington,* HNF-SD-GN-ER-501.	HNF-SD-GN-ER-501		X					
3.2.5.1.b	The subsystem shall be designed to withstand the natural phenomena hazards as specified in *Engineering Design and Evaluation,* RPP-PRO-097.	RPP-PRO-097		X					

APPENDIX A

SOURCE DOCUMENTS AND TEST METHODS (16 SHEETS)

Section	Function/Requirement	Source Document(s)	Remarks	Verification Method					
				Exam	Demo	Test	Anal	Alt Calc	N/A
3.2.5.1.c	The containment skid shall be resistive to pressure gradients above and below the foundation and shall be capable of preventing failure caused by settlement, compression, or uplift.	40 CFR 264.193, Section (c)(2)					X		
3.2.5.2.1	The subsystem components shall be designed to perform their intended function in the chemical environment defined in the following requirements.	N/A					X		
3.2.5.2.1.a	The DST Diluent and Flush Subsystem equipment shall be capable of receiving and diluting concentrated caustic solutions obtained from a supplier that are up to 50 wt%.	RPP-4878					X		
3.2.5.2.1.b	The DST Diluent and Flush Subsystem equipment shall be capable of receiving and diluting concentrated nitrite solutions obtained from a supplier that are up to 40 wt%.	RPP-4878					X		
3.2.5.2.2	Not applicable. (Radiation)	Not applicable.							X
3.2.6	System components shall be designed to withstand the shock and vibration environments during normal transportation.	N/A.							X
3.3	The DST Diluent and Flush Subsystem shall comply with *General Design Criteria*, DOE Order 6430.1A, Sections 1300-7 and 1323.	DOE Order 6430.1A, Sections 1300-7 and 1323		X			X		
3.3.1.a	The piping shall meet the applicable design and construction requirements contained in *Process Piping*, ASME B31.3.	RPP-PRO-097, Table B-1							X

APPENDIX A

SOURCE DOCUMENTS AND TEST METHODS (16 SHEETS)

Section	Function/Requirement	Source Document(s)	Remarks	Verification Method					
				Exam	Demo	Test	Anal	Alt Calc	N/A
3.3.1.b	All valves shall meet the applicable design and construction requirements contained in *Valves-Flanged, Threaded, and Welding End*, ASME B16.34.	RPP-PRO-097, Table B-1	Standard Design Code						X
3.3.1.c	All concrete work shall meet the applicable design and construction requirements contained in *Building Code Requirements for Reinforced Concrete*, ACI 318.	RPP-PRO-097, Table B-1	Standard Design Code	X					
3.3.1.d	Electrical equipment enclosures shall be, as a minimum, NEMA-Type 4 or 4X, per *Industrial Controls and Systems*, NEMA ICS 6. Electrical enclosures shall have the cover secured by a toggle-actuated handle to minimize difficulties in opening and fully securing the enclosure.	RPP-PRO-097, Table B-1	Standard Design Code						X
3.3.1.e	Dry disconnect couplings shall be provided for connections to the chemical supply.	HNF-1939, Volume III, Figure 2-79		X					
3.3.1.f	Buried portions of the diluent/flush supply lines shall be back-filled with a noncorrosive, porous, homogeneous medium to ensure that the piping is fully and uniformly supported.	DOE Order 6430.1A, Section 0275-4	"Control of Pollution from Other Sources"	X					
3.3.1.g	DST Diluent and Flush Subsystem routing valves shall be provided with position switches.	HNF-1939, Volume III, Section 7.3.4.1		X					

APPENDIX A

SOURCE DOCUMENTS AND TEST METHODS (16 SHEETS)

Section	Function/Requirement	Source Document(s)	Remarks	Verification Method					
				Exam	Demo	Test	Anal	Alt Calc	N/A
3.3.1.h	There shall be provisions for prevention and detection of backflow from the DST Transfer Valving Subsystem. Requirements for prevention and detection of waste backflow are contained in *Double-Shell Tank Transfer Valving Subsystem Specification*, HNF-4160, Sections 3.2.1.13 and 3.2.1.14.	HNF-4160, Sections 3.2.1.13 and 3.2.1.14							X
3.3.1.i	Sodium hydroxide delivery piping shall be in accordance with AC 5.23 in HNF-SD-WM-TSR-006.	HNF-SD-WM-TSR-006		X					
3.3.1.j	The DST Diluent and Flush Subsystem shall be designed for positive removal (such as a locked drainage valve) of chemically contaminated liquids and uncontaminated precipitation.	DOE Order 6430.1A		X					
3.3.1.k	For the connection to the DST Transfer Valving Subsystem, the DST Diluent and Flush Subsystem shall use material that can be welded to 304L stainless steel and is compatible with 304L stainless steel.	HNF-1939, Volume III, Figure 2-79		X			X		
3.3.1.l	The DST Diluent and Flush Subsystem shall comply with "Carriage By Public Highway," "General," Title 49 CFR 177.834, parts (I)(2)-(5), during tanker unloading.	49 CFR 177.834		X					

APPENDIX A

SOURCE DOCUMENTS AND TEST METHODS (16 SHEETS)

Section	Function/Requirement	Source Document(s)	Remarks	Verification Method					
				Exam	Demo	Test	Anal	Alt Calc	N/A
3.3.1.m	The DST Diluent and Flush Subsystem shall be capable of immediately (without interruption of flow) transitioning from providing a flush solution to providing a diluent solution and from providing a diluent solution to providing a flush solution.	HNF-2938, Appendix F.1.3, "Use of Inhibited Flush Water"; RPP-5346	Flushing is necessary to remove any deposited solids to avoid line pluggage and to minimize corrosion.		X				
3.3.1.n	The piping for conveying dilute sodium nitrite and sodium hydroxide solutions from the Diluent and Flush Station to the appropriate valve pit shall meet the requirements of DOE Order 6430.1A, Sections 1300-7.1 and 1300-7.4.	DOE Order 6430.1A, Sections 1300-7.1 and 1300-7.4		X					
3.3.1.o	The DST Diluent and Flush Subsystem shall be controllable by the DST Monitor and Control Subsystem. Chemical adjustments to flush and diluent solutions, temperature adjustments of the solutions, flow rate adjustments of the solutions, and the shutdown of the subsystem shall be possible from the DST Monitor and Control Subsystem.	RPP-4878; HNF-4155		X					
3.3.1.p	The DST Diluent and Flush Subsystem shall be capable of adjusting the flow rate of water or solution to support transitions from the line preheating application to the in-line dilution application.	RPP-4878	Minimizes localized precipitation that could result from cooling of saturated liquids.	X	X				

APPENDIX A

SOURCE DOCUMENTS AND TEST METHODS (16 SHEETS)

Section	Function/Requirement	Source Document(s)	Remarks	Verification Method					
				Exam	Demo	Test	Anal	Alt Calc	N/A
3.3.1.q	The DST Diluent and Flush Subsystem shall be capable of adjusting the flow rate and chemical composition of solutions to support transitions from the in-line dilution application to the waste transfer line flush application.	RPP-4878		X					
3.3.1.r	The diluent/flush supply piping to the valve and pump pits shall have a design pressure rating at least 6,240 kPa (905 lbf/in^3).	RPP-5346			X				
3.3.2	The subsystem shall comply with electromagnetic radiation emission requirements set forth in *A List of EMI/EMC Requirements*, HNF-2962.	HNF-2962		X					
3.3.3	This section defines marking and nameplate requirements of the various assemblies and subassemblies that make up the DST Diluent and Flush Subsystem.	HNF-IP-0842, Vol. II, Section 6.1							X
3.3.3.a	The subsystem shall label new equipment and/or modifications to existing equipment in a standardized format in accordance with the tank farm labeling program as specified in *RPP Administration*, "Tank Farm Operations Equipment Labeling," HNF-IP-0842, Volume II, Section 6.1.	HNF-IP-0842, Vol. II, Section 6.1		X					
3.3.3.b	All chemical and other pipelines shall be individually marked in accordance with DOE Order 6430.1A, Section 1323.4.3, and ASME B31.3.	DOE Order 6430.1A, Section 1323.4.3; ASME B31.3		X					

APPENDIX A

SOURCE DOCUMENTS AND TEST METHODS (16 SHEETS)

Section	Function/Requirement	Source Document(s)	Remarks	Verification Method					
				Exam	Demo	Test	Anal	Alt Calc	N/A
3.3.4	Reserved. The requirements for workmanship are to be addressed in lower level project design documentation (drawings, procurement specifications, etc.).	Not applicable.							X
3.3.5	All like equipment and parts shall be interchangeable/ standardized to the maximum extent practical.	DOE Order 6430.1A, Sections 0110-3 and 1100	"Flexibility" & "Equipment – General"						X
3.3.6.1.a	The subsystem shall incorporate design features that comply with the applicable requirements of 29 CFR 1910, Subparts D, E, G, J, L, M, O, and S.	RPP-PRO-097, Table B-1		X					
3.3.6.1.b	The DST Diluent and Flush Subsystem shall be designed to keep personnel exposure as low as reasonably achievable (ALARA) in accordance with Section 12.4 of HNF-IP-0842, Volume VII.	HNF-IP-0842		X			X		
3.3.6.1.c	Safety shower and eyewash stations shall be provided at the Diluent and Flush Stations and shall comply with *Emergency Eyewash and Shower Equipment*, ANSI Z358.1	ANSI Z358.1		X					
3.3.6.2.a	The DST Diluent and Flush Subsystem pipeline shall be designed and operated such that water hammer events are precluded from occurring, or an analysis is performed to determine the adequacy of the design to handle maximum water hammer events.	HNF-5141	Flowsheets indicate several transfers a day.		X				

APPENDIX A

SOURCE DOCUMENTS AND TEST METHODS (16 SHEETS)

Section	Function/Requirement	Source Document(s)	Remarks	Verification Method					
				Exam	Demo	Test	Anal	Alt Calc	N/A
3.3.6.3.a	The safety classification of structures, systems, and components for the DST Diluent and Flush Subsystem shall be determined using the process described in Sections 6.9 – 6.12 of HNF-IP-0842, Volume IV, and shall be based on existing, safety analyses conducted in *Tank Waste Remediation System Final Safety Analysis Report,* HNF-SD-WM-SAR-067, and *Safety Assessment for Initial Tank Retrieval System, Project W-211,* HNF-SD-W211-PSAD-001. Unreviewed safety question screening will be required for system installation in accordance with "Unreviewed Safety Questions," HNF-IP-0842, Vol. IV, Section 5.4.	HNF-IP-0842; HNF-SD-WM-SAR-067							X
3.3.6.3.b	The Diluent and Flush Station (containing piping, tanks, pumps, etc.) shall have adequate containment for possible leaks or spills.	HNF-SD-WM-TSR-006, AC 5.23		X					
3.3.7.a	The DST Diluent and Flush Subsystem design shall comply with DOE Order 6430.1A, Section 1300.12, "Human Factors Engineering."	DOE Order 6430.1A, Section 1300.12	"Human Factors Engineering"						X
3.3.8.a	All components that may become contaminated with radioactive or other hazardous materials under normal or abnormal operating conditions shall be designed to incorporate measures to simplify future decontamination and decommissioning in accordance with DOE Order 6430.1A, Section 1300-11.	DOE Order 6430.1A, Section 1300-11	"Nonreactor Nuclear Facilities – General" and "Decontamination and Decommissioning"						X

APPENDIX A

SOURCE DOCUMENTS AND TEST METHODS (16 SHEETS)

Section	Function/Requirement	Source Document(s)	Remarks	Verification Method					
				Exam	Demo	Test	Anal	Alt Calc	N/A
3.4.a	Records, documents, and drawing control pertinent to design functions shall be in accordance with *Quality Assurance Records Standards*, RPP-PRO-222, and *Document Control Program Standards*, HNF-PRO-224. Engineering document development shall be in accordance with *Preparation and Control Standards for Engineering Drawings*, RPP-PRO-709.	RPP-PRO-222; HNF-PRO-224; RPP-PRO-709							X
3.4.b	All DST Diluent and Flush Subsystem structures, systems, and components (SSC) shall be incorporated into the master equipment list in accordance with the component index process requirements defined in Section 7.3 of HNF-IP-0842, Volume V.	HNF-IP-0842							X
3.5.1.a	Accessible portions of the DST Diluent and Flush Subsystem shall be designed for limited contact maintenance.	DOE Order 6430.1A, Section 1300-6.1					X		
3.5.1.b	Below-grade portions of the diluent/flush supply lines shall be designed to require no maintenance.	DOE Order 6430.1A, Section 1300-6.3							X
3.5.2	The subsystem shall use readily available commercial parts and components to the greatest extent practical.	DOE Order 6430.1A, Section 1100	"Equipment – General"						X
3.5.2.a	Minimum numbers of spares for like components shall be determined based on mean time between failure and the number of like components installed.	WHC-SD-GN-DGS-30011, Section 4.16.2							X

APPENDIX A

SOURCE DOCUMENTS AND TEST METHODS (16 SHEETS)

Section	Function/Requirement	Source Document(s)	Remarks	Verification Method					
				Exam	Demo	Test	Anal	Alt Calc	N/A
3.7.1	Diluent and Flush Structures	N/A							X
3.7.2	Heating Equipment	N/A							X
3.7.3	Chemical Unloading Equipment	N/A							X
3.7.4	Diluent and Flush Solution Transfer Equipment	N/A							X
3.7.4	Diluent and Flush Instrumentation and Controls	N/A							X
3.8	Except in those instances where Washington State has been granted regulatory authority by the Federal Government, the hierarchical relationship among requirements specified in Section 3.0 is as follows: • Federal requirements (e.g., Code of Federal Regulations, DOE orders) • State requirements (e.g., Revised Code of Washington, as specified in the Washington Administrative Code) • Local ordinances • RPP procedures • National consensus codes and standards. The hierarchy is useful in establishing the relative order of precedence of the requirements documents levied in this specification.	N/A							X

APPENDIX A

SOURCE DOCUMENTS AND TEST METHODS (16 SHEETS)

Section	Function/Requirement	Source Document(s)	Remarks	Verification Method					
				Exam	Demo	Test	Anal	Alt Calc	N/A
3.9	The subsystem shall be designed such that access controls to radiation and high-radiation areas meet the requirements of *Tank Farms Radiological Control Manual (TFRCM)*, HNF-5183 (local implementation of 10 CFR 835).	HNF-5183							X
3.10	Not applicable.	N/A							X
4.0	Quality assurance for the DST Diluent and Flush Subsystem shall be performed in accordance with "Quality Assurance Program," HNF-IP-0842, Volume XI, Section 1.0.	HNF-IP-0842, Vol. XI, Section 1.0							X
4.1.2.a	Seat closure tests shall be performed for diluent and flush valves in accordance with the test methods in ASME B16.34 and *Pressure Testing of Steel Valves*, MSS-SP-61. Seat leakage from each flow side to the isolated port shall be within the limits specified in MSS-SP-61.	ASME B16.34; MSS-SP-61	Standard Design Codes				X		
4.1.2.b	Shell tests shall be performed for diluent and flush valves in accordance with ASME B16.34. No visible leakage at pressure boundary walls is permissible at the 52° C (125 °F) test pressure conditions except for valve stem leakage. There shall be no indication of valve stem leakage at the 38 °C (100 °F) test pressure condition.	ASME B16.34 RPP-PRO-097, Table B-1	Standard Design Code				X		

APPENDIX A

SOURCE DOCUMENTS AND TEST METHODS (16 SHEETS)

Section	Function/Requirement	Source Document(s)	Remarks	Verification Method					
				Exam	Demo	Test	Anal	Alt Calc	N/A
4.1.2.c	Electrical materials and equipment shall be Underwriters' Laboratories (UL) or factory-mutual tested, with label attached, for the purpose intended, whenever such products are available. Where no UL or factory-mutual listed products of the type are available testing, and certification by the RPP authorized representative or by a nationally recognized testing agency shall be acceptable.	DOE Order 6430.1A, Section 1605-1	"Basic Electrical Materials and Methods"	X					

REFERENCES

10 CFR 835, 2000, "Occupational Radiation Protection," *Code of Federal Regulations*, as amended.

29 CFR 1910, 1999, "Occupational Safety and Health Standards," *Code of Federal Regulations*, as amended.

40 CFR 264.193, "Protection of Environment," "Standards for Owners and Operators of Hazardous Waste Treatment, Storage, and Disposal Facilities," "Containment and Detection of Releases," *Code of Federal Regulations,* as amended.

49 CFR 177.834, 1998, "Carriage by Public Highway," "General," *Code of Federal Regulations,* as amended.

ACI 318, 1995, *Building Code Requirements for Reinforced Concrete*, American Concrete Institute, Farmington Hills, Michigan.

ANSI Z358.1, 1998, *Emergency Eye Wash and Shower Equipment*, American National Standards Institute, New York, New York.

ASME B16.34, 1998, *Valves-Flanged, Threaded, and Welding End,* American Society of Mechanical Engineers, New York, New York.

ASME B31.3, 1999, *Process Piping,* American Society of Mechanical Engineers, New York, New York.

DOE Order 6430.1A, 1989, *General Design Criteria*, U.S. Department of Energy, Washington, D.C.

Hanford Site Drawings:

- B-130-C7, Rev. 1, *Construction Specification for 241-AN Tank Farm Completion, Project B-130*
- ES-314E-M40, Rev. 10, *200E Tank Farm W-314 Waste Transfer Lines* (Fluor Daniel Northwest Internal Drawing).

Hanford Site Procedures, Fluor Hanford, Inc., Richland, Washington [HNF]:

- HNF-PRO-224, Rev. 3, 2000, *Document Control Program Standards.*

Hanford Site Procedures, CH2M HILL Hanford Group, Inc., Richland, Washington [RPP]:

- RPP-PRO-097, Rev. 0, 1999, *Engineering Design and Evaluation*
- RPP-PRO-222, Rev. 0, 1999, *Quality Assurance Records Standards*
- RPP-PRO-709, Rev. 0, 1999, *Preparation and Control Standards for Engineering Drawings.*

HNF-1939, Rev. 0a, 1999, *Waste Feed Delivery Technical Basis*, Vol. II, Addendum 1-1, "Waste Feed Delivery Flow Sheet for Tank 241-AZ-101," Numatec Hanford Company for Fluor Daniel Hanford, Inc., Richland, Washington.

HNF-1939, Rev. 0b, 1999, *Waste Feed Delivery Technical Basis*, Vol. II, Addendum 2-1, "Waste Feed Delivery Flow Sheet for Tank 241-AN-105," Numatec Hanford Company for Fluor Daniel Hanford, Inc., Richland, Washington.

HNF-1939, Rev. 0c, 1999, *Waste Feed Delivery Technical Basis*, Vol. II, Addendum 3-1, "Waste Feed Delivery Flow Sheet for Tank 241-AN-104," Numatec Hanford Company for Fluor Daniel Hanford, Inc., Richland, Washington.

HNF-1939, 1999, *Waste Feed Delivery Technical Basis*, Vol. III, "Waste Feed Delivery System Description," Rev. 0, Lockheed Martin Hanford Corporation for Fluor Daniel Hanford, Inc., Richland, Washington.

HNF-2938, 1998, *Evaluation of 241-AN Tank Farm Supporting Phase 1 Waste Feed Delivery*, Rev. 0, Numatec Hanford Corporation and COGEMA Engineering Corporation for Fluor Daniel Hanford, Inc., Richland, Washington.

HNF-2962, 1998, *A List of EMI/EMC Requirements*, Rev. 0, Numatec Hanford Corporation for Fluor Daniel Hanford, Inc., Richland, Washington.

HNF-4155, 2000, *Double-Shell Tank Monitor and Control Subsystem*, Rev. 1, Numatec Hanford Corporation for CH2M HILL Hanford Group, Inc., Richland, Washington.

HNF-4157, 2001, *Double-Shell Tank Utilities Specification*, Rev. 1, Numatec Hanford Corporation for CH2M HILL Hanford Group, Inc., Richland, Washington.

HNF-4160, 2001, *Double-Shell Tank Transfer Valving Subsystem Specification*, Rev. 1, Numatec Hanford Corporation for CH2M HILL Hanford Group, Inc., Richland, Washington.

HNF-4716, 2000, *Supporting Documentation for Double-Shell Tank Subsystem Specifications*, prepared by Numatec Hanford Corporation for CH2M HILL Hanford Group, Inc., Richland, Washington.

HNF-5141, 2000, *Reliability, Availability, and Maintainability Recommendations for the Design of Double-Shell Tank Components*, Rev. 0, prepared by EQE International, Inc., for CH2M HILL Hanford Group, Inc., Richland, Washington.

HNF-5183, 2000, *Tank Farms Radiological Control Manual (TFRCM)*, Rev. 0, CH2M HILL Hanford Group, Inc., Richland, Washington.

HNF-5442, 1999, *Preliminary Heat-Transfer Studies for the Double-Shell Tank Transfer Piping*, Rev. 0, Fluor Daniel Hanford, Inc., Richland, Washington.

HNF-IP-0842, 1999, *RPP Administration*, Lockheed Martin Hanford Corporation, Richland, Washington.

HNF-SD-GN-ER-501, 1998, *Natural Phenomena Hazards, Hanford Site, Washington,* Rev. 1, Numatec Hanford Corporation for Fluor Daniel Hanford, Inc., Richland, Washington.

HNF-SD-W211-PSAD-001, 1998, *Safety Assessment for Initial Tank Retrieval Systems, Project W-211*, Rev. 0, Numatec Hanford Corporation for Fluor Daniel Hanford, Inc., Richland, Washington.

HNF-SD-WM-SAR-067, 1999, *Tank Waste Remediation System Final Safety Analysis Report*, Rev. 1, Lockheed Martin Hanford Corporation for Fluor Daniel Hanford, Inc., Richland, Washington.

HNF-SD-WM-SP-012, 1999, *Tank Waste Remediation System Operation and Utilization Plan to Support Waste Feed Delivery,* Rev. 1, Numatec Hanford Corporation, Lockheed Martin Hanford Corporation, and COGEMA Engineering Corporation for Fluor Daniel Hanford, Inc., Richland, Washington.

HNF-SD-WM-TSR-006, 1999, *Tank Waste Remediation System Technical Safety Requirements,* Rev. 1, Fluor Daniel Hanford, Inc., Richland, Washington.

MSS-SP-61, 1992, *Pressure Testing of Steel Valves,* Manufacturers Standardization Society, Englewood, Colorado.

NEMA ICS 6, 1993, *Industrial Controls and Systems,* National Electrical Manufacturers Association, Arlington, Virginia.

OSD-T-151-00007, 1993, *Operating Specifications for the 241-AN, AP, AW, AY, AZ and SY Tank Farms*, Rev. H-5, Westinghouse Hanford Company, Richland, Washington.

RPP-4878, 2000, *Requirements for Diluting and Flushing Double-Shell Tank Systems*, Rev. 0, Numatec Hanford Corporation for CH2M HILL Hanford Group, Inc., Richland, Washington.

RPP-5227, 1999, *Assessment of the Electrical Power Requirements for Continued Safe Storage and Waste Feed Delivery Support (SSTs/DSTs)*, Rev. 0, Numatec Hanford Corporation for CH2M HILL Hanford Group, Inc., Richland, Washington.

RPP-5346, 2001, *Waste Feed Delivery Transfer System Analysis*, Rev. 1, Numatec Hanford Corporation for CH2M HILL Hanford Group, Inc., Richland, Washington.

WHC-SD-GN-DGS-30011, 1994, *Radiological Design Guide,* Rev. 0, Westinghouse Hanford Company, Richland, Washington.

This page intentionally left blank.

DISTRIBUTION

Onsite

1	U.S. Department of Energy Richland Operations Office	
	Reading Room	H2-53
1	Pacific Northwest National Laboratories	
	Hanford Technical Library	P8-55
2	Lockheed Martin Services, Inc.	
	Central Files	B1-07
	Document Processing Center	A3-94

This page intentionally left blank.